PN91 - PN92 - PN93
PN510 - PN515
PN520 - PN525

Progressive, Fully-modulating

Heavy oil Burners

MANUAL OF INSTALLATION - USE - MAINTENANCE

CIB UNIGAS

BURNERS - BRUCIATORI - BRULERS - BRENNER - QUEMADORES - ГОРЕЛКИ

M039196CC Rel. 2.5 11/2023
M12923CA Rel. 0.7 03/2016

TABLE OF CONTENTS

WARNINGS **5**
PART I: INSTALLATION **5**

Burner model identification *5*
Technical Specifications *5*
Performance Curves *7*

INSTALLING THE BURNER 8
Packing *8*
Handling the burner *8*
Fitting the burner to the boiler *9*
Electrical connections *10*
Fan motor direction *11*
Connecting the oil heating resistors *11*
Double-pipe and single-pipe system *11*
Oil pumps *12*
About the use of fuel pumps *12*
Connecting the oil flexible hoses *13*
Connections to the oil gun *13*
Recommendations to design heavy oil feeding plants *13*
Pipe heating system *14*
Inlet minimum pressure of the pump (both for supplying system and burner) *14*
Pump operating maximum pressure (both for the supplying system and burner) *14*
Adjusting the supplying oil ring *14*
Burner adjustments *14*

HYDRAULIC DIAGRAMS 18
Adjusting light oil flow rate *21*
Oil thermostat adjustment *22*
Thermostat adjustment for petroleum burners *22*

ADJUSTING AIR AND FUEL RATE 23
Adjustments - brief description *23*
Oil Flow Rate Settings by means of Berger STM30../Siemens SQM40.. actuator *24*
Adjustment by the Siemens SQL33.. actuator *26*
Calibration of air pressure switch *28*
Fully-modulating burners *28*
Oil circuit *29*

PART II: OPERATION **30**

OPERATION 30
Control panel *31*

PART III: MAINTENANCE **32**

ROUTINE MAINTENANCE 30
Self-cleaning filter *32*
Removing the combustion head *32*
Removing the oil gun, replacing the nozzle and the electrodes *33*
Nozzle and electrodes correct position *34*
Checking the detection current *34*
Cleaning and replacing the detection photoresistor *34*
Seasonal stop *34*
Burner disposal *34*

TROUBLESHOOTING 35

BURNER EXPLODED VIEW 36

SPARE PARTS 38

ELECTRICAL WIRING DIAGRAMS 39

APPENDIX

WARNINGS

THIS MANUAL IS SUPPLIED AS AN INTEGRAL AND ESSENTIAL PART OF THE PRODUCT AND MUST BE DELIVERED TO THE USER.

INFORMATION INCLUDED IN THIS SECTION ARE DEDICATED BOTH TO THE USER AND TO PERSONNEL FOLLOWING PRODUCT INSTALLATION AND MAINTENANCE.

THE USER WILL FIND FURTHER INFORMATION ABOUT OPERATING AND USE RESTRICTIONS, IN THE SECOND SECTION OF THIS MANUAL. WE HIGHLY RECOMMEND TO READ IT.

CAREFULLY KEEP THIS MANUAL FOR FUTURE REFERENCE.

1) GENERAL INTRODUCTION

- The equipment must be installed in compliance with the regulations in force, following the manufacturer's instructions, by qualified personnel.
- Qualified personnel means those having technical knowledge in the field of components for civil or industrial heating systems, sanitary hot water generation and particularly service centres authorised by the manufacturer.
- Improper installation may cause injury to people and animals, or damage to property, for which the manufacturer cannot be held liable.
- Remove all packaging material and inspect the equipment for integrity.

In case of any doubt, do not use the unit - contact the supplier.

The packaging materials (wooden crate, nails, fastening devices, plastic bags, foamed polystyrene, etc), should not be left within the reach of children, as they may prove harmful.

- Before any cleaning or servicing operation, disconnect the unit from the mains by turning the master switch OFF, and/or through the cut-out devices that are provided.
- Make sure that inlet or exhaust grilles are unobstructed.
- In case of breakdown and/or defective unit operation, disconnect the unit. Make no attempt to repair the unit or take any direct action.

Contact qualified personnel only.

Units shall be repaired exclusively by a servicing centre, duly authorised by the manufacturer, with original spare parts.

Failure to comply with the above instructions is likely to impair the unit's safety.

To ensure equipment efficiency and proper operation, it is essential that maintenance operations are performed by qualified personnel at regular intervals, following the manufacturer's instructions.

- When a decision is made to discontinue the use of the equipment, those parts likely to constitute sources of danger shall be made harmless.
- In case the equipment is to be sold or transferred to another user, or in case the original user should move and leave the unit behind, make sure that these instructions accompany the equipment at all times so that they can be consulted by the new owner and/or the installer.
- For all the units that have been modified or have options fitted then original accessory equipment only shall be used.
- This unit shall be employed exclusively for the use for which it is meant. Any other use shall be considered as improper and, therefore, dangerous.

The manufacturer shall not be held liable, by agreement or otherwise, for damages resulting from improper installation, use and failure to comply with the instructions supplied by the manufacturer.

2) SPECIAL INSTRUCTIONS FOR BURNERS

- The burner should be installed in a suitable room, with ventilation openings complying with the requirements of the regulations in force, and sufficient for good combustion.
- Only burners designed according to the regulations in force should be used.
- This burner should be employed exclusively for the use for which it was designed.
- Before connecting the burner, make sure that the unit rating is the same as delivery mains (electricity, gas oil, or other fuel).
- Observe caution with hot burner components. These are, usually, near to the flame and the fuel pre-heating system, they become hot during the unit operation and will remain hot for some time after the burner has stopped.

When the decision is made to discontinue the use of the burner, the user shall have qualified personnel carry out the following operations:

a Remove the power supply by disconnecting the power cord from the mains.

b) Disconnect the fuel supply by means of the hand-operated shut-off valve and remove the control handwheels from their spindles.

Special warnings

- Make sure that the burner has, on installation, been firmly secured to the appliance, so that the flame is generated inside the appliance firebox.
- Before the burner is started and, thereafter, at least once a year, have qualified personnel perform the following operations:

a set the burner fuel flow rate depending on the heat input of the appliance;

b set the flow rate of the combustion-supporting air to obtain a combustion efficiency level at least equal to the lower level required by the regulations in force;

c check the unit operation for proper combustion, to avoid any harmful or polluting unburnt gases in excess of the limits permitted by the regulations in force;

d make sure that control and safety devices are operating properly;

e make sure that exhaust ducts intended to discharge the products of combustion are operating properly;

f on completion of setting and adjustment operations, make sure that all mechanical locking devices of controls have been duly tightened;

g make sure that a copy of the burner use and maintenance instructions is available in the boiler room.

- In case of a burner shut-down, reser the control box by means of the RESET pushbutton. If a second shut-down takes place, call the Technical Service, **without trying to RESET further**.
- The unit shall be operated and serviced by qualified personnel only, in compliance with the regulations in force.

3) GENERAL INSTRUCTIONS DEPENDING ON FUEL USED

3a) ELECTRICAL CONNECTION

- For safety reasons the unit must be efficiently earthed and installed as required by current safety regulations.
- It is vital that all saftey requirements are met. In case of any doubt, ask for an accurate inspection of electrics by qualified personnel, since the manufacturer cannot be held liable for damages that may be caused by failure to correctly earth the equipment.
- Qualified personnel must inspect the system to make sure that it is adequate to take the maximum power used by the equipment shown on the equipment rating plate. In particular, make sure that the system cable cross section is adequate for the power absorbed by the unit.
- No adaptors, multiple outlet sockets and/or extension cables are permitted to connect the unit to the electric mains.
- An omnipolar switch shall be provided for connection to mains, as required by the current safety regulations.
- The use of any power-operated component implies observance of a few basic rules, for example:
  - do not touch the unit with wet or damp parts of the body and/or with bare feet;
  - do not pull electric cables;
  - do not leave the equipment exposed to weather (rain, sun, etc.) unless expressly required to do so;
  - do not allow children or inexperienced persons to use equipment;
- The unit input cable shall not be replaced by the user.

In case of damage to the cable, switch off the unit and contact qualified personnel to replace.

When the unit is out of use for some time the electric switch supplying all the power-driven components in the system (i.e. pumps, burner, etc.) should be switched off.

3b) FIRING WITH GAS, LIGHT OIL OR OTHER FUELS

GENERAL

- The burner shall be installed by qualified personnel and in compliance with regulations and provisions in force; wrong installation can cause injuries to people and animals, or damage to property, for which the manufacturer cannot be held liable.
- Before installation, it is recommended that all the fuel supply system pipes be carefully cleaned inside, to remove foreign matter that might impair the burner operation.
- Before the burner is commissioned, qualified personnel should inspect the following:

a the fuel supply system, for proper sealing;

b the fuel flow rate, to make sure that it has been set based on the firing rate required of the burner;

c the burner firing system, to make sure that it is supplied for the designed fuel type;

d the fuel supply pressure, to make sure that it is included in the range shown on the rating plate;

e the fuel supply system, to make sure that the system dimensions are adequate to the burner firing rate, and that the system is equipped with all the safety and control devices required by the regulations in force.

- When the burner is to remain idle for some time, the fuel supply tap or taps should be closed.

SPECIAL INSTRUCTIONS FOR USING GAS

Have qualified personnel inspect the installation to ensure that:

a the gas delivery line and train are in compliance with the regulations and provisions in force;

b all gas connections are tight;

c the boiler room ventilation openings are such that they ensure the air supply flow required by the current regulations, and in any case are sufficient for proper combustion.

- Do not use gas pipes to earth electrical equipment.
- Never leave the burner connected when not in use. Always shut the gas valve off.
- In case of prolonged absence of the user, the main gas delivery valve to the burner should be shut off.

Precautions if you can smell gas

a do not operate electric switches, the telephone, or any other item likely to generate sparks;

b immediately open doors and windows to create an air flow to purge the room;

c close the gas valves;

d contact qualified personnel.

- Do not obstruct the ventilation openings of the room where gas appliances are installed, to avoid dangerous conditions such as the development of toxic or explosive mixtures.

DIRECTIVES AND STANDARDS

Gas burners

European directives:

- Directive 2009/142/EC - Gas Appliances;
- Directive 2006/95/EC on low voltage;
- Directive 2004/108/EC on electromagnetic compatibility

Harmonised standards :

-UNI EN 676 (Gas Burners;

-CEI EN 60335-1(Household and similar electrical appliances - Safety. Part 1: General requirements;

- EN 50165 (Electrical equipment of non-electric appliances for household and similar purposes. Safety requirements.

Light oil burners

European directives:

- Directive 2006/95/EC on low voltage;
- Directive 2004/108/EC on electromagnetic compatibility

Harmonised standards :

-CEI EN 60335-1(Household and similar electrical appliances - Safety. Part 1: General requirements;

- EN 50165 (Electrical equipment of non-electric appliances for household and similar purposes. Safety requirements.

National standards :

-UNI 7824: Monobloc nebulizer burners for liquid fuels. Characteristics and test methods

Heavy oil burners

European directives:

- Directive 2006/95/EC on low voltage;
- Directive 2004/108/EC on electromagnetic compatibility

Harmonised standards :

-CEI EN 60335-1 Household and similar electrical appliances - SafetyPart 1: General requirements;

- EN 50165 Electrical equipment of non-electric appliances for household and similar purposes. Safety requirements.

National standards :

-UNI 7824: Monobloc nebulizer burners for liquid fuels. Characteristics and test methods

Gas - Light oil burners

European directives:

- Directive 2009/142/EC Gas Appliances;
- Directive 2006/95/EC on low voltage;
- Directive 2004/108/EC on electromagnetic compatibility

Harmonised standards :

-UNI EN 676 Gas Burners

-CEI EN 60335-1(Household and similar electrical appliances - Safety. Part 1: General requirements;

- EN 50165 Electrical equipment of non-electric appliances for household and similar purposes. Safety requirements.

National standards :

-UNI 7824: Monobloc nebulizer burners for liquid fuels. Characteristics and test methods

Gas - Heavy oil burners

European directives:

- Directive 2009/142/EC - Gas Appliances;
- Directive 2006/95/EC on low voltage;
- Directive 2004/108/EC on electromagnetic compatibility

Harmonised standards :

-UNI EN 676 (Gas Burners;

-CEI EN 60335-1(Household and similar electrical appliances - Safety. Part 1: General requirements;

- EN 50165 Electrical equipment of non-electric appliances for household and similar purposes. Safety requirements.

National standards :

-UNI 7824: Monobloc nebulizer burners for liquid fuels. Characteristics and test methods

PART I: INSTALLATION

Burner model identification

Burners are identified by burner type and model. Burner model identification is described as follows.

Type **PN91** Model **N-. PR. S. *. A.** (1) (2) (3) (4) (5) (6)	
(1) BURNER TYPE	**PN91 - PN92 - PN93 - PN510 - PN515 - PN520 - PN525**
(2) FUEL	N - Heavy oil, viscosity ≤ 50cSt (7° E) @ 50° C E - Heavy oil, viscosity ≤ 110cSt (15°E) @ 50° C D - Heavy oil, viscosity ≤ 400cSt (50° E) @ 50° C P - Petroleum, viscosity 89cSt (12° E) @ 50° C
(3) OPERATION (Available versions)	PR - Progressive MD - Fully modulating
(4) BLAST TUBE	S - Standard L - Extended
(5) DESTINATION COUNTRY	* - see data plate
(6) BURNER VERSION	A - Standard

Technical Specifications

BURNER		PN91	PN92	PN93
Output	min - max kW	698 - 2093	849 - 2558	550 - 4100
Fuel		Heavy oil		
Oil viscosity		See “Burner model identification” table		
Heavy oil rate	min. - max. kg/h	62 - 187	76- 228	49- 365
Power supply		230/400V 3N a.c. 50Hz		
Total power consumption (Heavy oil)	kW	23	24	32
Total power consumption (Petroleum)	kW	10.5	12	16
Fan motor	kW	4	5.5	7.5
Pre-heater resistors (heavy oil)	kW	18	18	24
Pre-heater resistors (Petroleum)	kW	6	6	8
Protection		IP40		
Approx. weight	kg	240	280	290
Operation		Progressive - Fully modulating		
Operating temperature	°C	-10 ÷ +50		
Storage Temperature	°C	-20 ÷ +60		
Working service*		Intermittent		

Heavy oil net calorific value (Hi): 40.4 MJ/kg (average value).

- Burners provided with Siemens LMO44 control box: the control box automatically stops after 24h of continuous working. The control box immediately starts up, automatically.
- Burners provided with Siemens LAL25 control box: for safety reasons, one controlled shutdown must take place every 24 hours of continuous working.

BURNER		PN510	PN515	PN520	PN525
Output	min - max kW	1314 - 3953	1628 - 4884	2326 - 6977	2000 - 8000
Fuel		Heavy oil			
Oil viscosity		See “Burner model identification” table			
Heavy oil rate	min. - max. kg/h	117 - 352	145 - 435	207 - 622	178 - 713
Power supply		230/400V 3N a.c. 50Hz			400V 3N a.c. 50Hz
Total power consumption (Heavy oil)	kW	32	41.5	59.7	69.2
Total power consumption (Petroleum)	kW	16	20	28	32
Fan-pump motor	kW	7.5	11	-	-
Fan motor	kW	-	-	15	18.5
Pump motor	kW	-	-	2.2	2.2
Pre-heater resistors (heavy oil)	kW	24	30	42	48
Pre-heater resistors (Petroleum)	kW	8	10	14	16
Protection		IP40			
Approx. weight	kg	320	370	415	430
Operation		Progressive - Fully modulatingProgressive - Fully modulating			
Operating temperature	°C	-10 ÷ +50			
Storage Temperature	°C	-20 ÷ +60			
Working service*		Intermittent			

Heavy oil net calorific value (Hi): 40.4 MJ/kg (average value).

- Burners provided with Siemens LMO44 control box: the control box automatically stops after 24h of continuous working. The control box immediately starts up, automatically.
- Burners provided with Siemens LAL25 control box: for safety reasons, one controlled shutdown must take place every 24 hours of continuous working.

Performance Curves

PN91

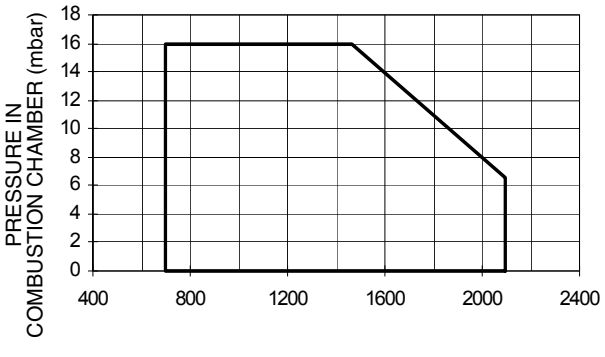

PN92

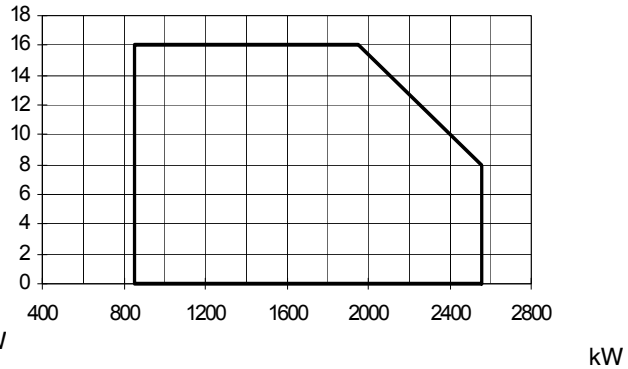

PN93

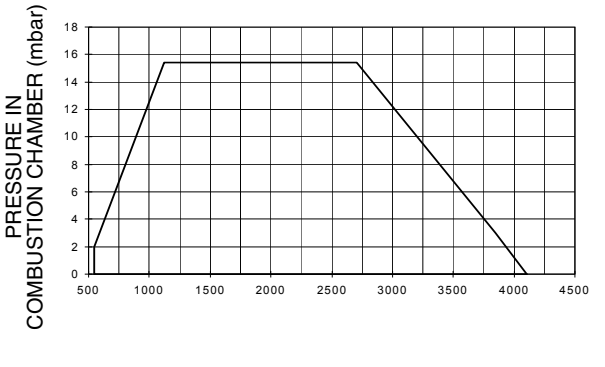

PN510

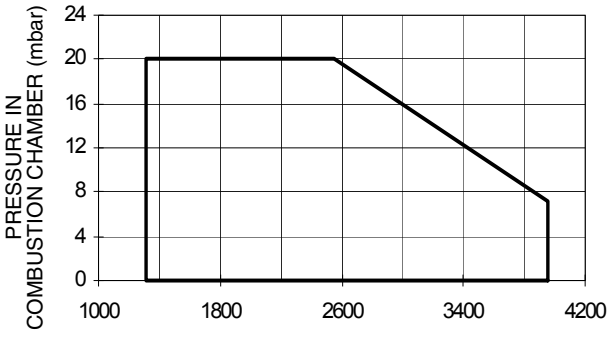

PN515

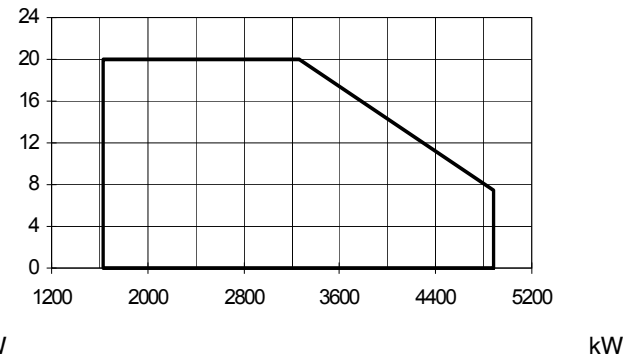

PN520

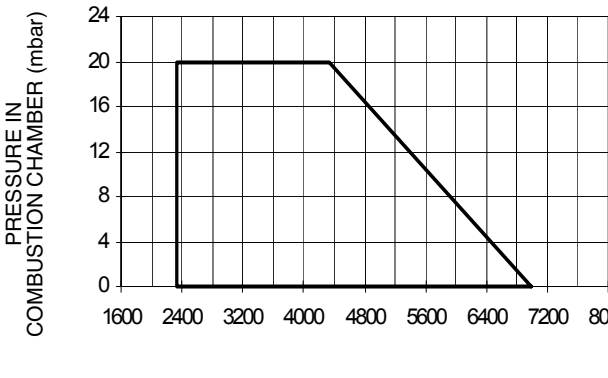

PN525

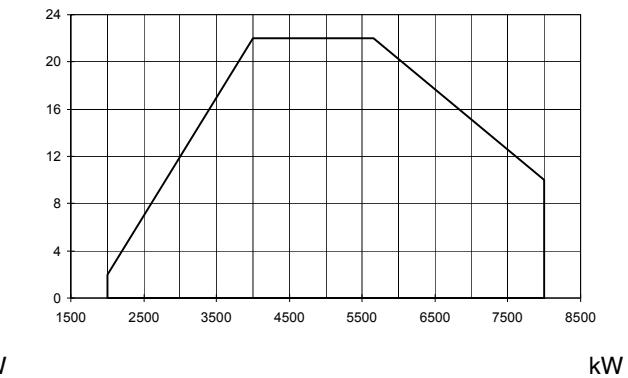

To get the input in kcal/h, multiply value in kW by 860.

Data are referred to standard conditions: atmospheric pressure at 1013mbar, ambient temperature at 15°C.

NOTE: The performance curve is a diagram that represents the burner performance in the type approval phase or in the laboratory tests, but does not represent the regulation range of the machine. On this diagram the maximum output point is usually reached by adjsuting the combustion head to its “MAX” position (see paragraph “Adjusting the combustion head”); the minimum output point is reached setting the combustion head to its “MIN” position. During the first ignition, the combustion head is set in order to find a compromise between the burner output and the generator specifications, that is why the minimum output may be different from the Performance curve minimum.

Overall dimensions (mm)

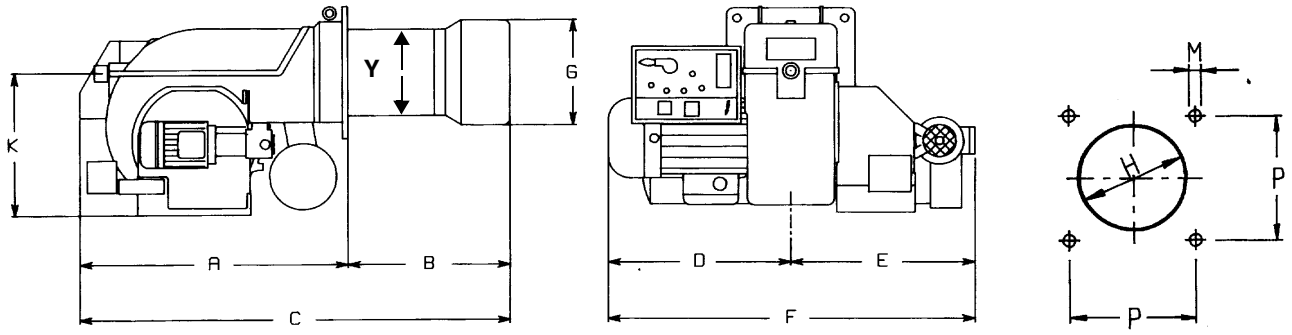

Type	A	B	BL	C	CL	D	E	F	G	K	H	M	P	Y
PN91	1017	298	488	1315	1505	532	520	1052	262	464	292	M12	295	228
PN92	1017	301	491	1318	1508	532	520	1052	292	464	322	M12	295	228
PN93	1017	301	491	1318	1508	532	520	1052	292	464	322	M12	295	228
PN510	1050	340	520	1390	1570	550	560	1110	345	650	385	M14	390	328
PN515	1050	340	520	1390	1570	550	560	1110	384	650	424	M14	390	328
PN520	1050	340	520	1390	1570	650	670	1320	422	650	472	M14	390	328
PN525	1050	340	520	1390	1600	650	670	1320	434	650	484	M14	390	340

B = standard blast tube

BL = extended blast tube

INSTALLING THE BURNER

Packing

Burners are despatched in wooden crates whose dimensions are:

PN91-92-93 1730mm x 1280mm x 1020mm (L x P x H)

PN510-515-520-525 1730mm x 1430mm x 1130mm(L x P x H)

Packing cases of this kind are affected by humidity and are not suitable for stacking. The following are placed in each packing case:

- burner;
- gasket to be inserted between the burner and the boiler;
- oil flexible hoses;
- oil filter;
- envelope containing this manual.

To get rid of the burner's packing, follow the procedures laid down by current laws on disposal of materials..

Handling the burner

⚠	**ATTENTION! The lhandling operations must be carried out by specialised and trained personnel. If these operations are not carried out correctly, the residual risk for the burner to overturn and fall down still persists.**
	To move the burner, use means suitable to support its weight (see paragraph "Technical specifications").
	The unpacked burner must be lifted and moved only by means of a fork lift truck.

The burner is mounted on a stirrup provided for handling the burner by means of a fork lift truck: the forks must be inserted into the A anb B ways. Remove the stirrup only once the burner is installed to the boiler.

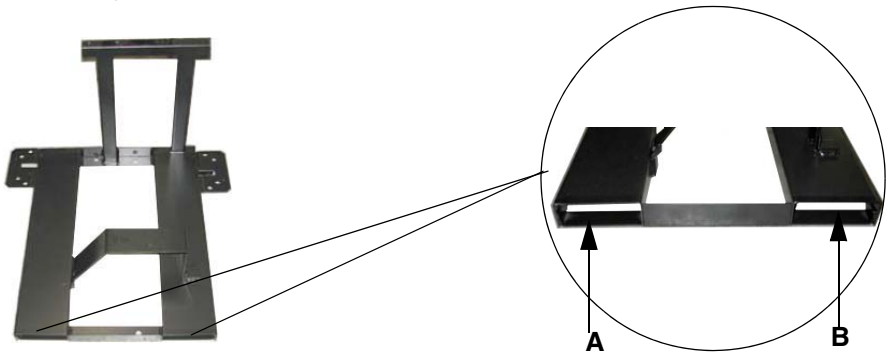

Fitting the burner to the boiler

To install the burner into the boiler, proceed as follows:

1 make a hole on the closing door of the combustion chamber as described on paragraph “Overall dimensions”)
2 place the burner to the boiler: lift it up and handle it according to the procedure described on paragraph “Handling the burner”;
3 place the 4 stud bolts (5) on boiler’s door, according to the burner’s drilling template described on paragraph “Overall dimensions”;
4 fasten the 4 stud bolts;
5 place the gasket on the burner flange;
6 install the burner into the boiler;
7 fix the burner to the stud bolts, by means of the fixing nuts, according to the next picture.
8 After fitting the burner to the boiler, ensure that the gap between the blast tube and the refractory lining is sealed with appropriate insulating material (ceramic fibre cord or refractory cement).

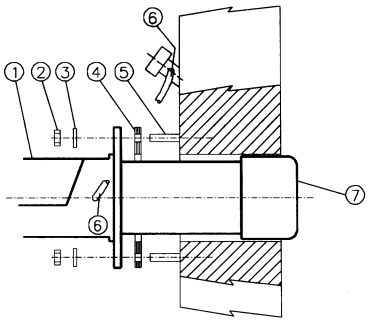

Keys

1 Burner
2 Fixing nut
3 Washer
4 Sealing gasket
5 Stud bolt
7 Blast tube

Set the upper side of the burner flange in a horizontal position, in order to obtain the correct inclination of the pre-heating tank

Key

1 Burner flange (upper side indicated)
2 Bracket
3 Pre-heating tank on the burner

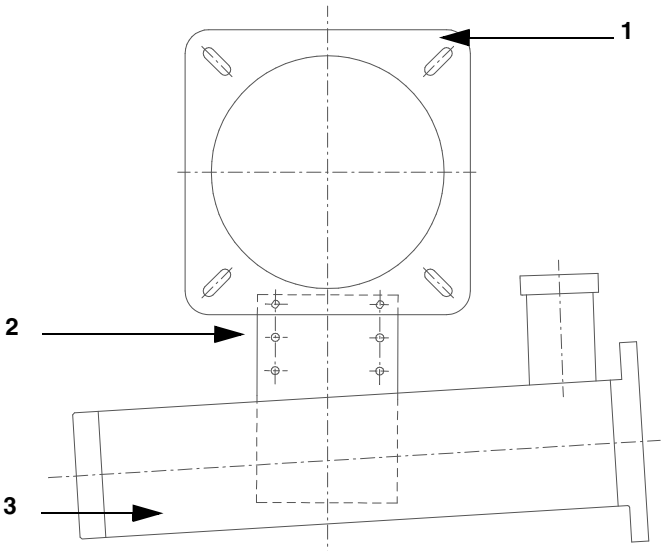

Electrical connections

	Respect the basic safety rules. Make sure of the connection to the earthing system. do not reverse the phase and neutral connections. Fit a differential thermal magnet switch adequate for connection to the mains.
	ATTENTION: before executing the electrical connections, pay attention to turn the plant's switch to OFF and be sure that the burner's main switch is in 0 position (OFF) too. Read carefully the chapter "WARNINGS", and the "Electrical connections" section.

	WARNING: The burner is provided with an electrical bridge between terminals 6 and 7; when connecting the high/low flame thermostat, remove this bridge before connecting the thermostat.
	IMPORTANT: Connecting electrical supply wires to the burner teminal block MA, be sure that the ground wire is longer than phase and neutral ones.
	CAUTION: auxiliary contacts are provided (terminals no. 507 and no. 508 of the MA terminal block) to connect an intervention system (alarm/power supply cutoff) in case of fault of the oil resistor contactor (see Fig. 1-Fig. 2).

To execute the electrical connections, proceed as follows:

1 remove the cover from the electrical board, unscrewing the fixing screws;

2 execute the electrical connections to the supply terminal board as shown in the following diagrams,

3 check the direction of the fan-pump motor (see next pargraph)

4 refit the panel cover.

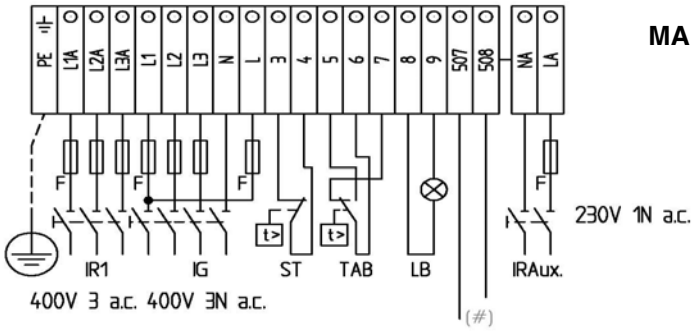

Fig. 1 - Progressive burners

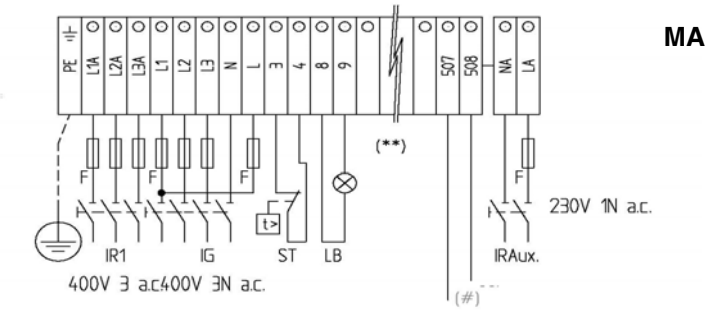

Fig. 2 - Fully modulating burners

(#) Free contact for "Faulty heater resistor contactor"

(**) Probes connection (see Fig. 3)

Probes connection

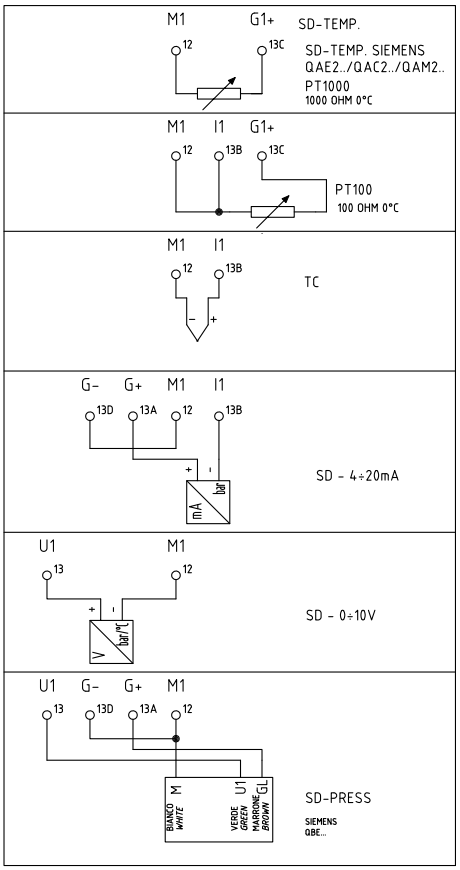

Fig. 3

Probes connection oby means of the 7-pins plug (Fig. 4) - see Fig. 3 for connections.

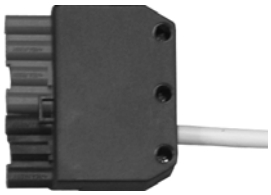

Fig. 4

Fan motor direction (and pump motor direction only for PN520 - PN525)

Once the electrical connection of the burner is performed, remember to check the rotation of the motor. The motor should rotate in an counterclockwise direction looking at cooling fan. In the event of incorrect rotation reverse the three-phase supply and check again the rotation of the motor.

Connecting the oil heating resistors

2.4 - 4.5 kW

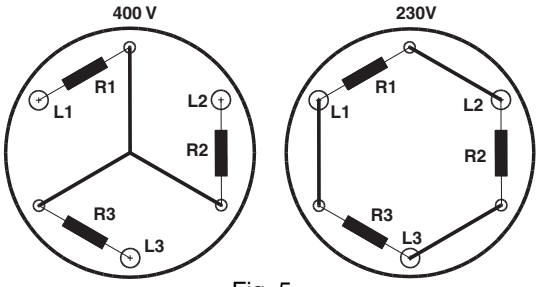

Fig. 5

8 - 12 kW

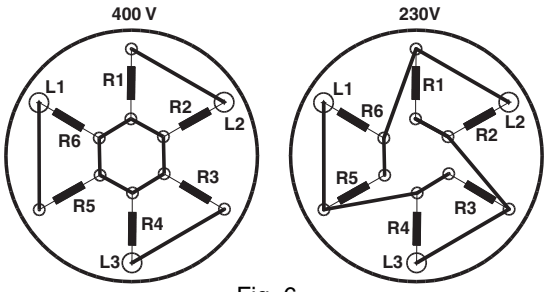

Fig. 6

18 - 24 kW

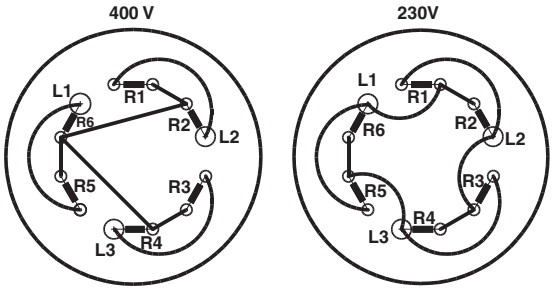

Fig. 7

ELECTRIC MOTOR CONNECTION

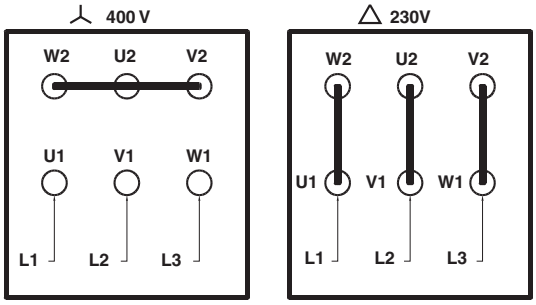

Fig. 8

Double-pipe and single-pipe system

The pumps that are used can be installed both into single-pipe and double-pipe systems.

Single-pipe system: a single pipe drives the oil from the tank to the pump's inlet. Then, from the pump, the pressurised oil is driven to the nozzle: a part comes out from the nozzle while the othe part goes back to the pump. In this system, the by-pass pulg, if provided, must be removed and the optional return port, on the pump's body, must be sealed by steel plug and washer.

Double-pipe system: as for the single pipe system, a pipe that connects the tank to the pump's inlet is used besides another pipe that connects the pum's return port to the tank, as well. The excess of oil goes back to the tank: this installation can be considered self-bleeding. If provided, the inside by-pass plug must be installed to avoid air and fuel passing through the pump.

Burners come out from the factory provided for double-stage systems. They can be suited for single-pipe system (recommended in the case of gravity feed) as decribed before.

To change from a 1-pipe system to a 2-pipe-system, insert the by-pass plug **G** (as for ccw-rotation- referring to the pump shaft).

Caution: Changing the direction of rotation, all connections on top and side are reversed.

Danfoss KSM..

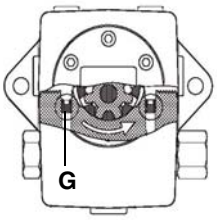

Suntec TA

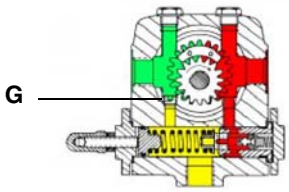

Bleed

Bleeding in two-pipe operation is automatic: it is assured by a bleed flat on the piston. In one-pipe operation, the plug of a pressure gauge port must be loosened until the air is evacuated from the system.

Oil pumps

PN91: SUNTEC TA2 / DANFOSS KSM50
PN92/93/510: SUNTEC TA3 / DANFOSS KSM70
PN515: SUNTEC TA4 / DANFOSS KSM100
PN520/525: SUNTEC TA5 / DANFOSS KSM140

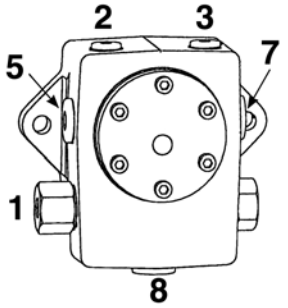

Danfoss KSM..	
Oil viscosity	2.5 ÷ 450 cSt
Oil temperature	-10 ÷ 160 °C
Max. suction pressure	4 bar
Min. suction pressure	-0.45 bar to avoid gasing
Max. return pressure	4 bar
Rotation speed	3450 rpm max

Keys

1 Pressure regulator
2 Pressure/Vacuum gauge port to measure inlet pressure/vacuum
3 Pressure gauge port
5 Suction
7 To the nozzle
8 Return

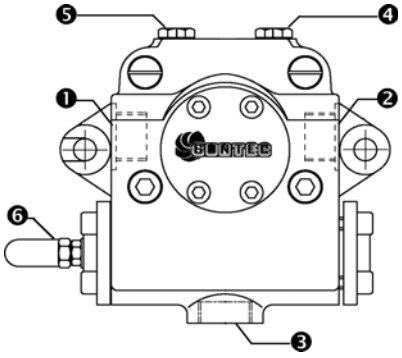

Suntec TA..	
Oil viscosity	3 ÷ 75 cSt
Oil temperature	0 ÷ 150°C
Min. suction pressure	- 0.45 bar to avoid gasing
Max. suction pressure	5 bar
Max. return pressure	5 bar
Rotation speed	3600 rpm max.

1 Inlet G1/2
2 To the nozzle G1/2
3 Return G1/2
4 Pressure gauge port G1/4
5 Vacuum gauge port G1/4
6 Pressure governor

About the use of fuel pumps

- Make sure that the by-pass plug is not used in a single pipe installation, because the fuel unit will not function properly and damage to the pump and burner motor could result.
- Do not use fuel with additives to avoid the possible formation over time of compounds which may deposit between the gear teeth, thus obstructing them.
- After filling the tank, wait before starting the burner. This will give any suspended impurities time to deposit on the bottom of the tank, thus avoiding the possibility that they might be sucked into the pump.
- On initial commissioning a "dry" operation is foreseen for a considerable length of time (for example, when there is a long suction line to bleed). To avoid damages inject some lubrication oil into the vacuum inlet.
- Care must be taken when installing the pump not to force the pump shaft along its axis or laterally to avoid excessive wear on the joint, noise and overloading the gears.
- Pipes should not contain air pockets. Rapid attachment joint should therefore be avoided and threaded or mechanical seal junctions preferred. Junction threads, elbow joints and couplings should be sealed with removable sg component. The number of junctions should be kept to a minimum as they are a possible source of leakage.
- Do not use PTFE tape on the suction and return line pipes to avoid the possibility that particles enter circulation. These could deposit on the pump filter or the nozzle, reducing efficiency. Always use O-Rings or mechanical seal (copper or aluminium gaskets) junctions if possible.
- An external filter should always be installed in the suction line upstream of the fuel unit.

Connecting the oil flexible hoses

To connect the flexible light oil hoses to the pump, proceed as follows, according to the pump provided:

1 remove the closing nuts **A** and **R** on the inlet and return connections of the pump;

2 screw the rotating nut of the two flexible hoses on the pump **being careful to avoid exchanging the inlet and return lines**: see the arrows marked on the pump that show the inlet and the return (see prevoius paragraph).

Suntec TA..	Danfoss KSM..
	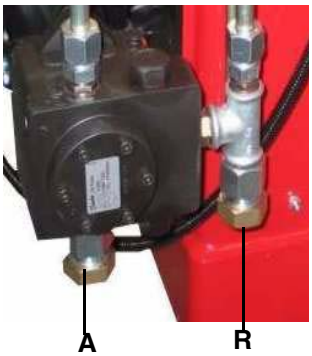

Connections to the oil gun

1 Inlet
2 Return
3 Gun opening
4 Heating wire (only for oil viscosity > 50Cst @ 50°C)
5 Cartdrige-type heater (only for oil viscosity > 50Cst @ 50°C)

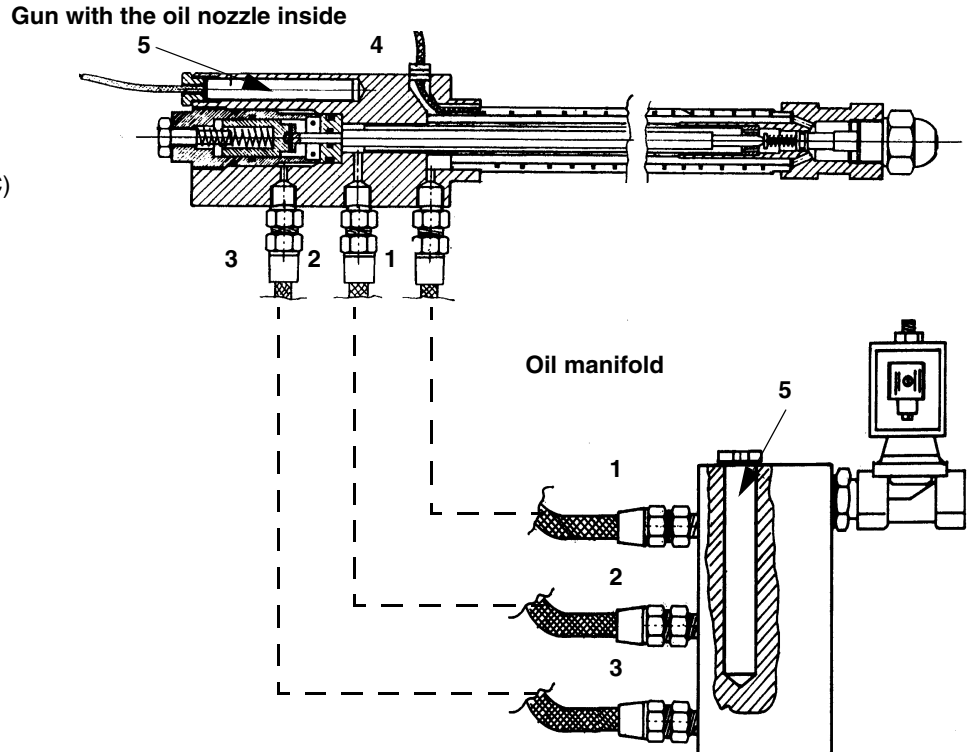

Recommendations to design heavy oil feeding plants

This paragraph is intended to give some suggestions to make feeding plants for heavy oil burners. To get a regular burner operation, it is very important to design the supplying system properly. Here some suggestions will be mentioned to give a brief description.

The term “heavy oil” is generic and summarises several chemical-physical properties, above all viscosity. The excessive viscosity makes the oil impossible to be pumped, so it must be heated to let it flow in the pipeline; because of the low-boiling hydrocarbons and dissolved gases, the oil must be also pressurised. The pressurisation is also necessary to feed the burner pump avoiding its cavitation because of the high suction at the inlet. The supplying system scope is to pump and heat oil.

The oil viscosity is referred in various unit measures; the most common are: °E, cSt, Saybolt and Redwood scales. Table 3 shows the-various unit convertions (e.g.: 132 cSt viscosity corresponds to 17.5°E viscosity).

The diagram in Fig. 9 shows how the heavy oil viscosity changes according to its temperature.

Example: an oil with 22°E viscosity at 50°C once heated to 100°C gets a 3 °E viscosity.

As far as the pumping capability, it depends on the type of the pump that pushes the oil even if on diagram in Fig. 9 a generic limit is quoted at about 100 °E, so it is recommended to refer to the specifications of the pump provided.

Usually the oil minimum temperature at the oil pump inlet increases as viscosity does, in order to make the oil easy to pump. Referring to the diagram on Fig. 10, it is possible to realise that to pump an oil with 50°E viscosity at 50°C, it must be heated at about 80°C.

Pipe heating system

Pipe heating system must be provided, that is a system to heat pipes and plant components to mantain the viscosity in the pumping limits. Higher the oil viscosity and lower the ambient temperature, more necessary the pipe heating system.

Inlet minimum pressure of the pump (both for supplying system and burner)

A very low pressure leads to cavitation (signalled by its peculiar noise): the pump manifacturer declares the minimum value. Therefore, check the pump technical sheets.

By increasing the oil temperature, also the minimum inlet pressure at the pump must increase, to avoid the gassification of the oil low-boiling products and the cavitation. The cavitation compromises the burner operation, it causes the pump to break too. The diagram on Fig. 11 roughly shows the inlet pump pressure according to the oil temperature.

Pump operating maximum pressure (both for the supplying system and burner)

Remember that pumps and all the system components through which the oil circulates, feature an upper limit. Always read the technical documentation for each component. Schemes on Fig. 13 and Fig. 14 are taken from UNI 9248 "liquid fuel feeding lines from tank to burner" standard and show how a feeding line should be designed. For other countries, see related laws in force. The pipe dimensioning, the execution and the winding dimensioning and other construcitve details must be provided by the installer.

Adjusting the supplying oil ring

According to the heavy oil viscosity used, in the table below indicative temperature and pressure values to be set are shown.

Note: the temperature and pressure range allowed by the supplying ring components must be checked in the specifications table of the components themselves.

HEAVY OIL VISCOSITY AT 50 °C		PIPELINE PRESSURE	PIPELINE TEMPERATURE
cSt (°E)		bar	°C
	< 50 (7)	1- 2	20
> 50 (7)	< 110 (15)	1- 2	50
> 110 (15)	< 400 (50)	1- 2	65

Burner adjustments

The table below shows indicative values of temperature and pressure to be set on the burner devices, according to the viscosity of the heavy oil used. The oil temperature should be set on TR resistor thermostat in order to get about 1.5°E viscosity at the nozzle.

VISCOSITY AT 50 °C		NOZZLE PRESSURE MEASURED IN THE GUN	RETURN NOZZLE PRESSURE		TEMPERATURE ON THE PRE-HEATING RESISTORS		TEMPERATURE OF THE RESISTORS SAFETY THERMOSTAT TRS	TEMPERATURE ON THE OIL ENABLING THERMOSTAT TCN	TEMPERATURE ON THE PLANT ENABLING THERMOSTAT TCI
			min.	max.	min.	max.			
cSt (°E)		bar	bar		°C		°C	°C	°C
	< 50 (7)	25	7-9	19-20	100	115	170	80	50 - 60
> 50 (7)	< 110 (15)	25	7-9	19-20	125	140	190	100	60 - 80
> 110 (15)	400 (50)	25	7-9	19-20	145	160	190	110	70 - 90

Tab. 1 - Fluidics WR2 nozzle

VISCOSITY AT 50 °C		NOZZLE PRESSURE MEASURED IN THE GUN	RETURN NOZZLE PRESSURE		TEMPERATURE ON THE PRE-HEATING RESISTORS		TEMPERATURE OF THE RESISTORS SAFETY THERMOSTAT TRS	TEMPERATURE ON THE OIL ENABLING THERMOSTAT TCN	TEMPERATURE ON THE PLANT ENABLING THERMOSTAT TCI
			min.	max.	min.	max.			
cSt (°E)		bar	bar		°C		°C	°C	°C
	< 50 (7)	20	5-7	11-13	100	115	170	80	50 - 60
> 50 (7)	< 110 (15)	20	5-7	11-13	125	140	190	100	60 - 80
> 110 (15)	400 (50)	20	5-7	11-13	145	160	190	110	70 - 90

Tab. 2 - Bergonzo A3 nozzle

*

Viscosity units conversion table

Cinematics viscosity Centistokes (cSt)	Engler Degrees (°E)	Saybolt Seconds Universal (SSU)	Saybolt Seconds Furol (SSF)	Redwood Seconds no.1 (Standard)	Redwood Seconds no..2 (Admiralty)
1	1	31	--	29	--
2.56	1.16	35	--	32.1	--
4.3	1.31	40	--	36.2	5.1
7.4	1.58	50	--	44.3	5.83
10.3	1.88	60	--	52.3	6.77
13.1	2.17	70	12.95	60.9	7.6
15.7	2.45	80	13.7	69.2	8.44
18.2	2.73	90	14.44	77.6	9.3
20.6	3.02	100	15.24	85.6	10.12
32.1	4.48	150	19.3	128	14.48
43.2	5.92	200	23.5	170	18.9
54	7.35	250	28	212	23.45
65	8.79	300	32.5	254	28
87.6	11.7	400	41.9	338	37.1
110	14.6	500	51.6	423	46.2
132	17.5	600	61.4	508	55.4
154	20.45	700	71.1	592	64.6
176	23.35	800	81	677	73.8
198	26.3	900	91	762	83
220	29.2	1000	100.7	896	92.1
330	43.8	1500	150	1270	138.2
440	58.4	2000	200	1690	184.2
550	73	2500	250	2120	230
660	87.6	3000	300	2540	276
880	117	4000	400	3380	368
1100	146	5000	500	4230	461
1320	175	6000	600	5080	553
1540	204.5	7000	700	5920	645
1760	233.5	8000	800	6770	737
1980	263	9000	900	7620	829
2200	292	10000	1000	8460	921
3300	438	15000	1500	13700	--
4400	584	20000	2000	18400	--

Tab. 3

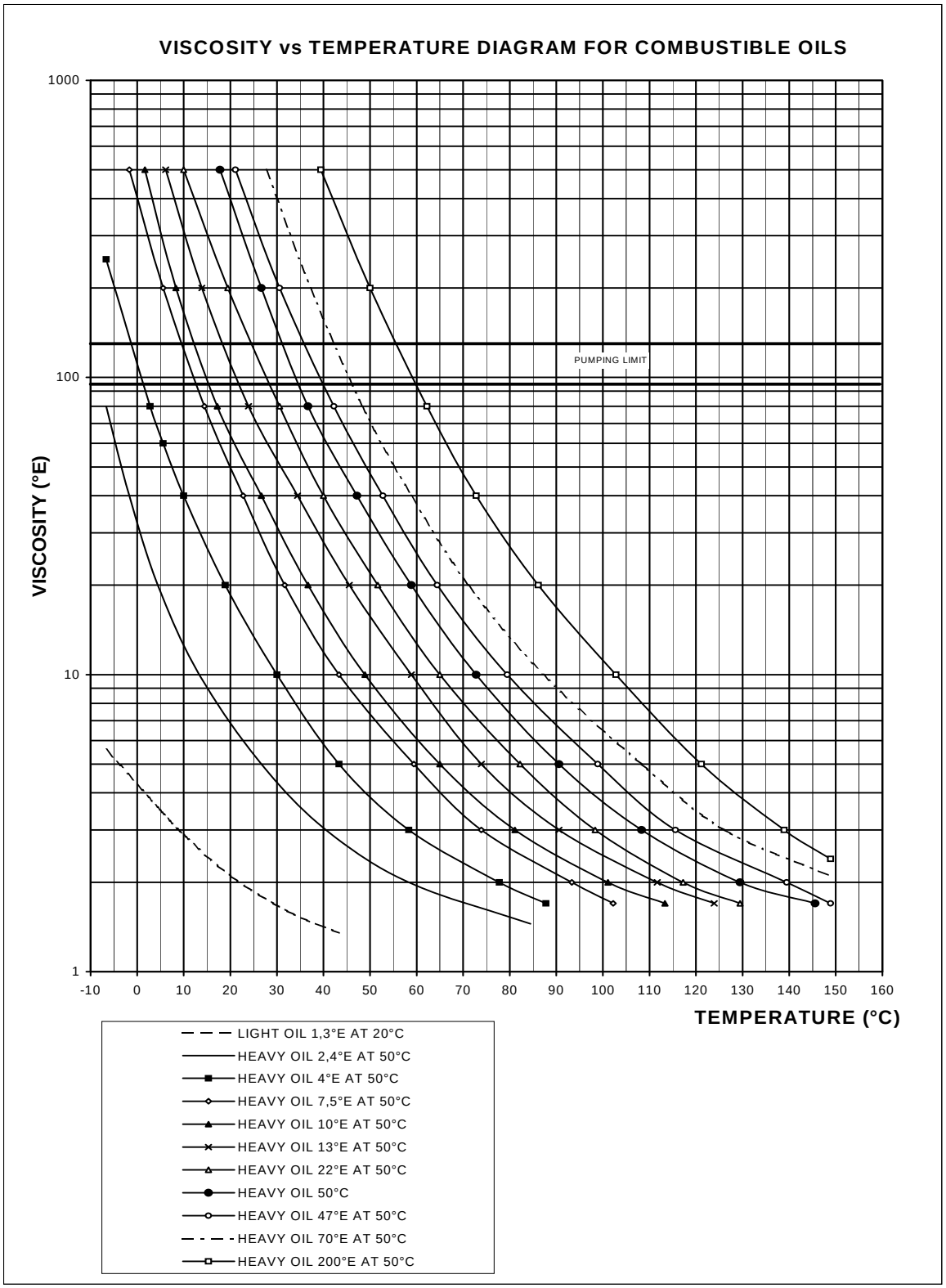
VISCOSITY vs TEMPERATURE DIAGRAM FOR COMBUSTIBLE OILS
VISCOSITY (°E)
1000
100
10
1
PUMPING LIMIT
-10
0
10
20
30
40
50
60
70
80
90
100
110
120
130
140
150
160
TEMPERATURE (°C)
LIGHT OIL 1,3°E AT 20°C
HEAVY OIL 2,4°E AT 50°C
HEAVY OIL 4°E AT 50°C
HEAVY OIL 7,5°E AT 50°C
HEAVY OIL 10°E AT 50°C
HEAVY OIL 13°E AT 50°C
HEAVY OIL 22°E AT 50°C
HEAVY OIL 50°C
HEAVY OIL 47°E AT 50°C
HEAVY OIL 70°E AT 50°C
HEAVY OIL 200°E AT 50°C

Fig. 9

Indicative diagram showing the oil temperature at burner pump inlet vs. oil viscosity

Example: if the oil has a 50°E @ 50°C viscosity, the oil temperature at the pump inlet should be 80°C (see diagram).

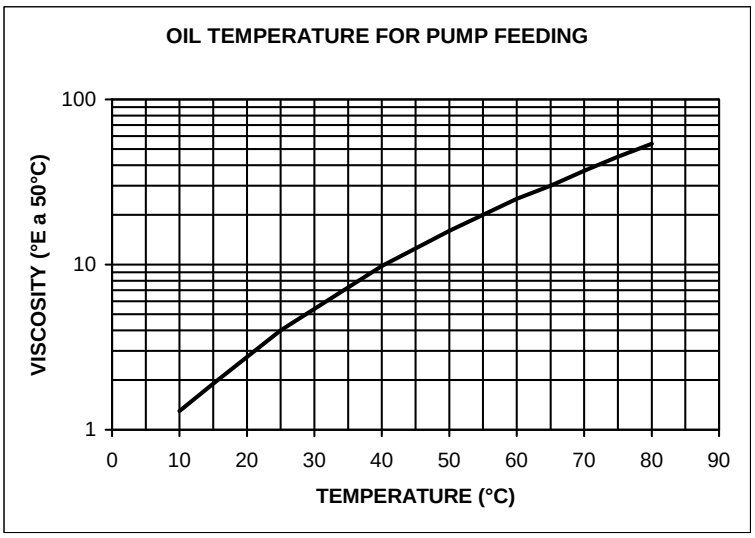

Fig. 10

Indicative diagram showing the oil pressure according to its temperature

PRESSION D'ALIMENTATION POMPE

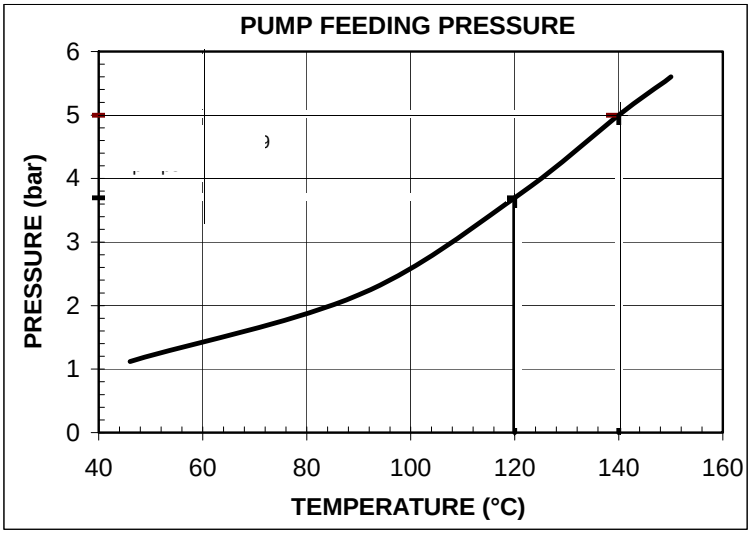

Fig. 11

Indicative diagram showing the oil atomising temperature according to its viscosity

Example: if the oil has a 50°E @ 50°C viscosity, the oil atomising temperature should be between 145°C and 160°C (see diagram).

VISCOSITY vs. TEMPERATURE DIAGRAM

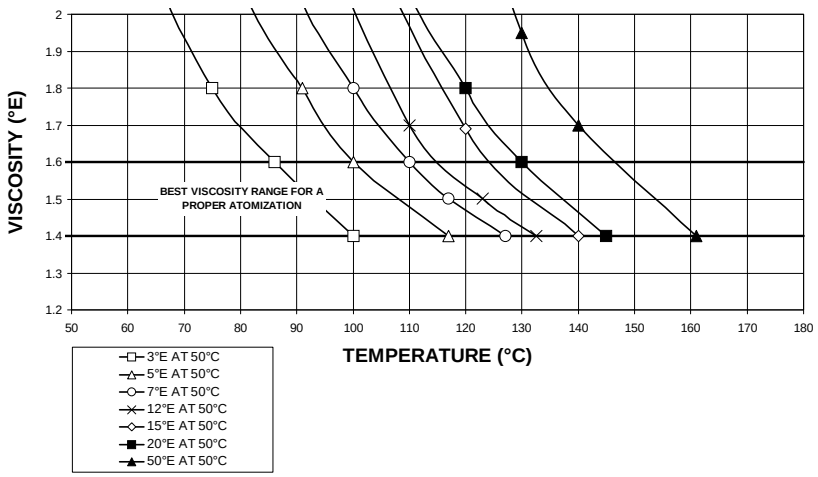

Fig. 12

HYDRAULIC DIAGRAMS

Fig. 13 - **Hydraulic diagram 3ID0023 - Single burner configuration**

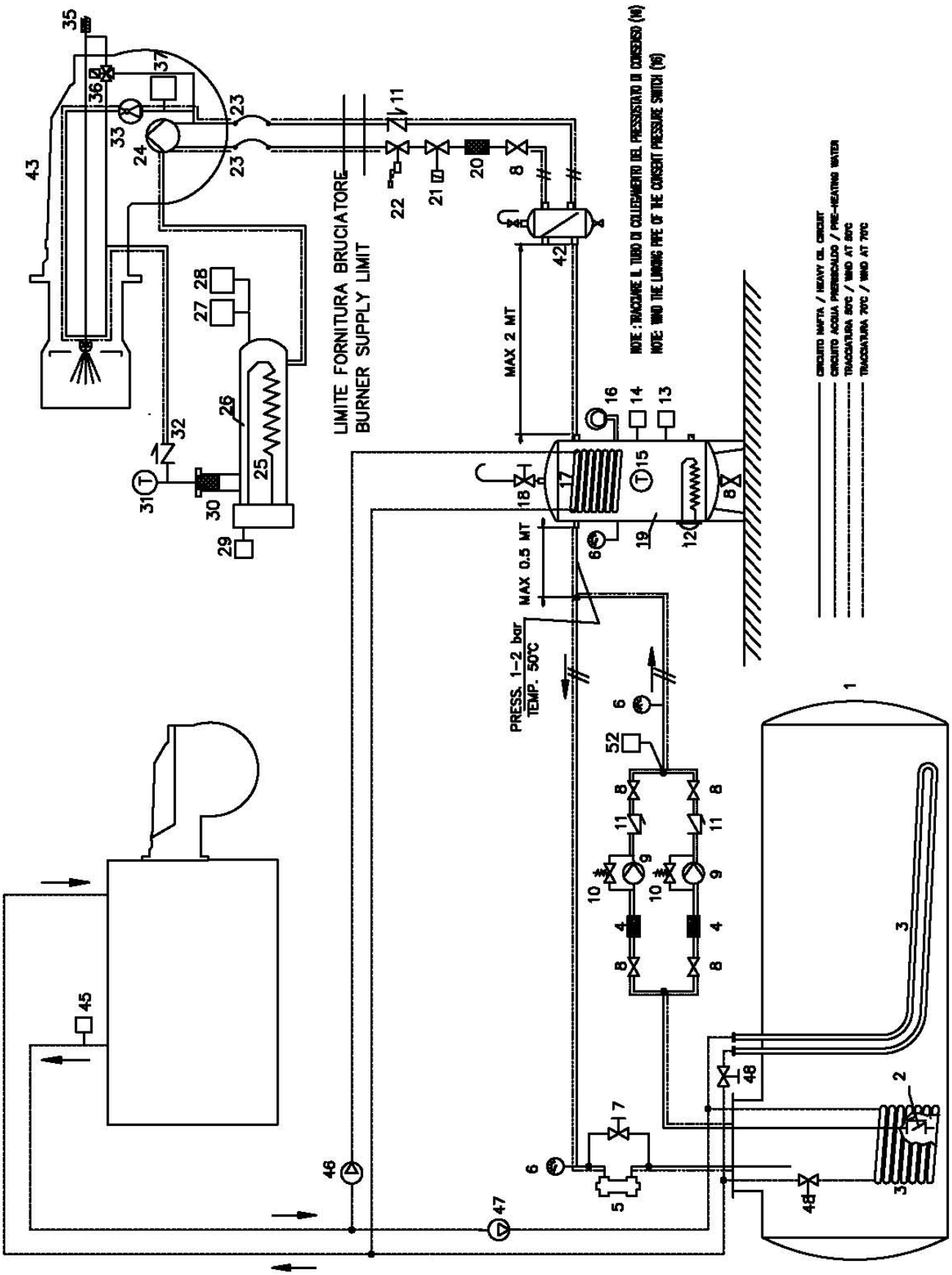

Fig. 14 - **Hydraulic diagram 3ID0014 - Two or more burners configuration**

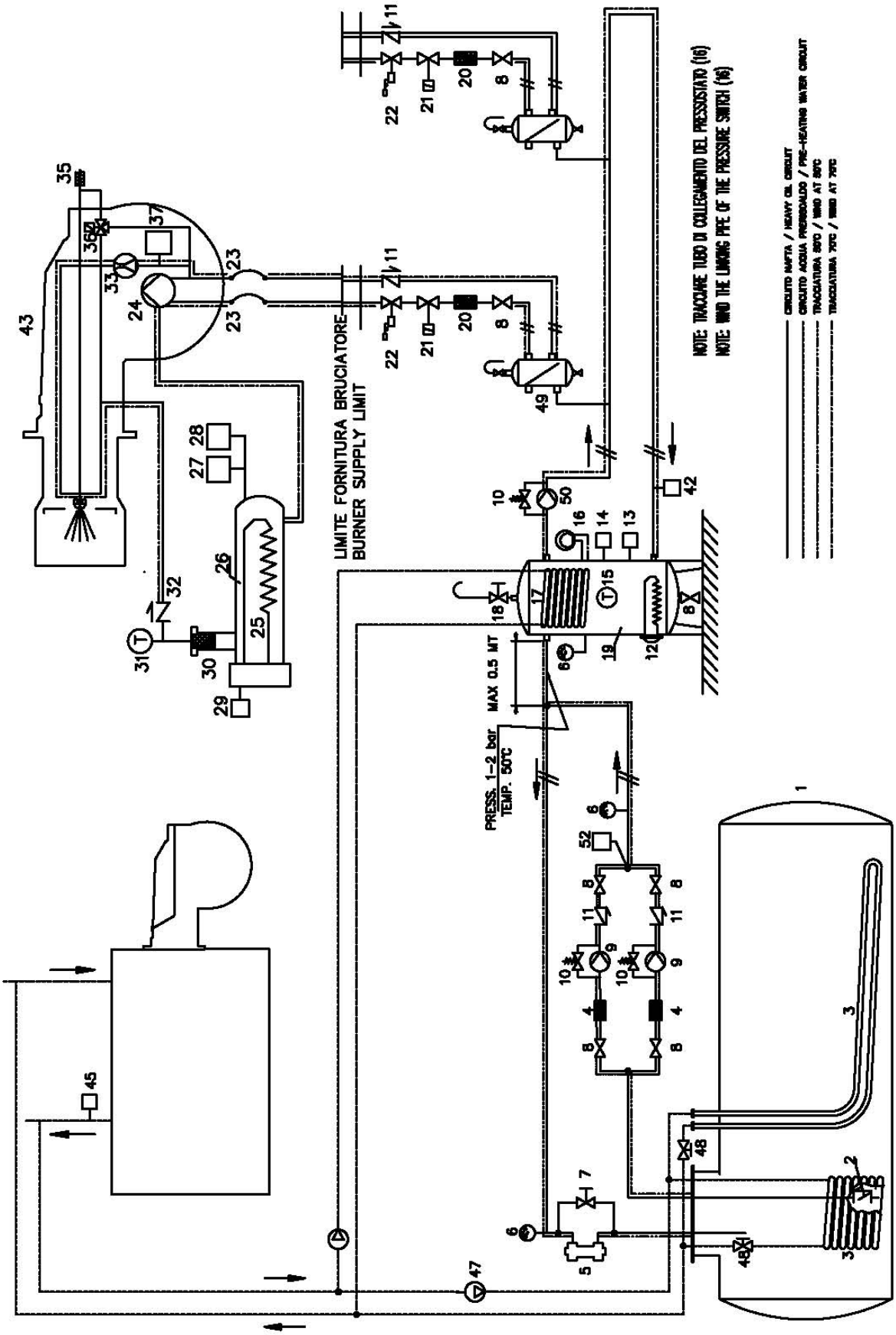

Hydraulic Diagram 3ID0014

1 Main tank
2 Bottom valve
3 Main tank pre-heating pipe
4 Oil filter (filtration, 1mm)
5 Circuit pressure regulator
6 Manometer
7 Pressure regulation by-pass valve
8 Manual valve
9 Oil pump
10 Pump pressure regulator
11 Unidirectional valve
12 Service tank pre-heating resistor
13 Service tank pre-heating thermostat
14 Burner consent thermostat
15 Thermometer
16 Consent pressure switch for service tank resistor
17 Service tank heating pipe
18 Service tank air drain valve
19 Service tank
20 Oil filter
21 Fuel solenoid valve
22 Fuel valve
23 Burner pump flexible hoses
24 Burner oil pump
25 Pre-heating tank resistor
26 Pre heating tank
27 Oil consent thermostat
28 Heather safety thermostat
29 Thermostat for oil temperature setting
30 Tank filter
31 Thermometer
32 Check valve
33 Return pressure governor
35 Oil needle drive piston
36 Oil rate regulator
37 Burner consent thermostat
42 Burner start consent thermostat
43 Burner
45 Thermostat for pipes pre-heating pumps
46 Water pump for service tank pre-heating (1)
47 Water pump for main tank pre-heating (19)
48 Water pre-heating balance setting valve
50 Oil circulation pump
52 Oil ring max. pressure switch

Hydraulic Diagram 3ID0023

1 Main tank
2 Bottom valve
3 Main tank pre-heating pipe
4 Oil filter
5 Circuit pressure regulator
6 Manometer
7 Pressure regulation by-pass valve
8 Manual valve
9 Oil pump
10 Pump pressure regulator
11 Unidirectional valve
12 Service tank pre-heating resistor
13 Service tank pre-heating thermostat
14 Burner consent thermostat
15 Thermometer
16 Consent pressure switch for service tank resistor
17 Service tank heating pipe
18 Service tank air drain valve
19 Service tank
20 Oil filter
21 Fuel solenoid valve
22 Fuel valve
23 Burner pump flexible hoses
24 Burner oil pump
25 Pre-heating tank resistor
26 Pre heating tank
27 Oil consent thermostat
28 Pre-heating tank resistors safety thermostat
29 Thermostat for oil temperature setting
30 Pre-heating tank filter
31 Thermometer
32 Check valve
33 Return pressure governor
35 Oil needle drive piston
36 Three way valve for piston drive
37 Burner consent thermostat
42 Air separation bottle
43 Burner
45 Thermostat for pipes pre-heating pumps
46 Water pump for service tank pre-heating (1)
47 Water pump for main tank pre-heating (19)
48 Valves for setting of pre-heating water balance
52 Oil ring max. pressure switch

Adjusting light oil flow rate

The light oil flow rate can be adjusted choosing a by-pass nozzle that suits the boiler/utilisation output and setting the delivery and return pressure values according to the ones quoted on the chart below and the diagram on Fig. 16 (as far as reading the pressure values, see next paragraphs).

FLUIDICS NOZZLE: REFERENCE DIAGRAM (INDICATIVE ONLY)

DIMENSIONS	FLOW RATE kg/h		Indicative pessure on return (bar)
	Min	Max	
40	13	40	19
50	16	50	22
60	20	60	20
70	23	70	23
80	26	80	23
90	30	90	22
100	33	100	22
115	38	115	21
130	43	130	22
145	48	145	21
160	53	160	21
180	59	180	22
200	66	200	21
225	74	225	22
250	82	250	22
275	91	275	22
300	99	300	23
330	109	330	23
360	119	360	22
400	132	400	22
450	148	450	22
500	165	500	22
550	181	550	22
600	198	600	23
650	214	650	23
700	231	700	23
750	250	750	23
800	267	800	22

Tab. 5

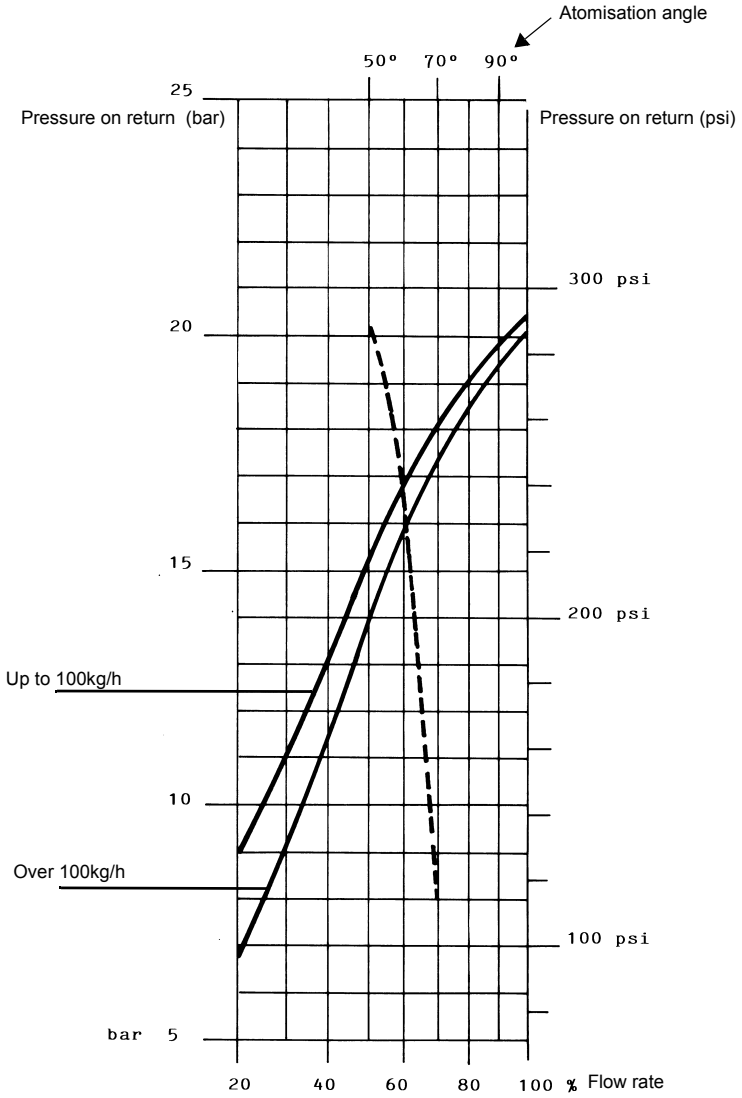

NOZZLE SUPPLY PRESSURE = 25 bar

- - - - - Atomisation angle according to the return pressure

——— % Flow rate

viscosity at nozzle = 5 cSt

ATTENTION! To achieve the maximum flow rate close completely the return line.

Oil thermostat adjustment

To find the thermostats, remove the cover of the burner switchboard. Adjust them using a screwdriver on the VR screw as shown in the next picture.

NOTE: thermostat **TCI** is provided on burners fired with fuel oil having a 50° E at 50° C viscosity only.

TCN - Oil enabling thermostat (Fig. 16)

Adjust this thermostat to a value 10% lower than that showed in the viscosity-temperature diagram ().

TRS - Resistor safety thermostat (Fig. 16)

The thermostat is set during factory testing at about 190° C.

This thermostat trips when the operating temperature exceeds the set limit. Ascertain the cause of the malfunction and reset the thermostat by means of the PR button.

TR - Resistor thermostat (Fig. 16)

Adjust this thermostat to the correct value according to the viscosity-temperature diagram (page 13) and check the temperature by using a thermometer mounted on the pre-heating tank.

TCI - Installation enabling thermostat (Fig. 16)

This thermostat is fitted on burners fired with oil at a viscosity of 400cSt at 50° C only. Set the thermostat according to data on page 13.

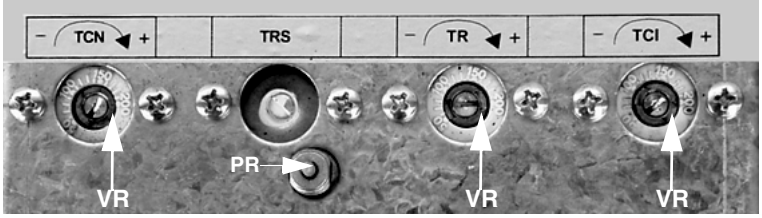

Fig. 16

Thermostat adjustment for petroleum burners

To find the thermostats, remove the burner switchboard cover. Adjust them using a screwdriver on the VR screw as shown in the next picture.

TCI -Installation enabling thermostat

Set this thermostat to about 40° C.

TCN - Oil enabling thermostat

Adjust this thermostat to a value between 45 and 50°C. Anyway, set TCN to a value possibly lower than the one set for TR (see below).

TR - Resistor thermostat

Adjust this thermostat to a value between 45 and 50°C. Check the temperature by using a thermometer mounted on the pre-heating tank.

TRS - Resistor safety thermostat

The thermostat is set during factory testing at about 190° C.

This thermostat trips when the operating temperature exceeds the set limit. Ascertain the cause of the malfunction and reset the thermostat by means of the PR button (see picture).

CAUTION: even if the adjusting ranges for the TR (Resistor thermostat) and TCN (Oil enabling thermostat) are the same, set TCN to a value lower than the one set for TR.

ADJUSTING AIR AND FUEL RATE

⚠	***ATTENTION:*** **before starting the burner up, be sure that the manual cutoff valves are open. Be sure that the mains switch is closed.**
	ATTENTION: During commissioning operations, do not let the burner operate with insufficient air flow (danger of formation of carbon monoxide); if this should happen, make the fuel decrease slowly until the normal combustion values are achieved.

⚠	**Before starting up the burner, make sure that the return pipe to the tank is not obstructed. Any obstruction would cause the pump seal to break.**

⚠	**IMPORTANT! the combustion air excess must be adjusted according to the values in the following chart.**

Recommended combustion parameters		
Fuel	***Recommended (%) CO_2***	***Recommended (%) O_2***
Heavy oil	11 ÷ 12.5	4.7 ÷ 6.7

Adjustments - brief description

- Adjust the air and oil flow rates at the maximum output (“high flame”) first, by means of the air damper and the adjusting cam respectively.
- Check that the combustion parameters are in the suggested limits.
- Then, adjust the combustion values corresponding to the points between maximum and minimum: set the shape of the adjusting cam foil. The adjusting cam sets the air/fuel ratio in those points, regulating the opening-closing of the fuel governor.
- Now set the low flame output, acting on the low flame microswitch of the actuator in order to avoid the low flame output increasing too much or the flues temperature getting too low to cause condensation in the chimney.

Now, adjust the burner according to the actuator model provided.

Oil Flow Rate Settings by means of Berger STM30../Siemens SQM40.. actuator

1 with the electrical panel open, prime the oil pump acting on the related contactor (see next picture): check the pump motor rotation (page 11) and keep pressing for some seconds until the oil circuit is charged;

2 bleed the air from the **M** pressure gauge port (Fig. 17) by loosing the cap without removing it, then release the solenoid starter.

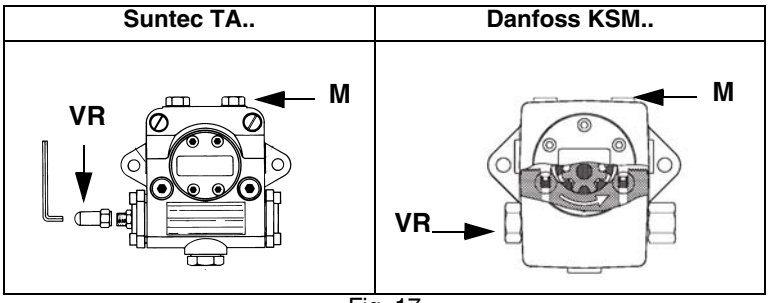

Fig. 17

3 Before starting the burner up, drive the high flame actuator microswitch matching the low flame one (in order to let the burner operates at the lowest output) to safely achieve the high flame stage.

4 Turn the burner on by means of its main switch **A** (see next picture): if the burner locks (LED **B** on in the control panel) press the RESET button (**C**) on the control panel - see chapter “OPERATION”.

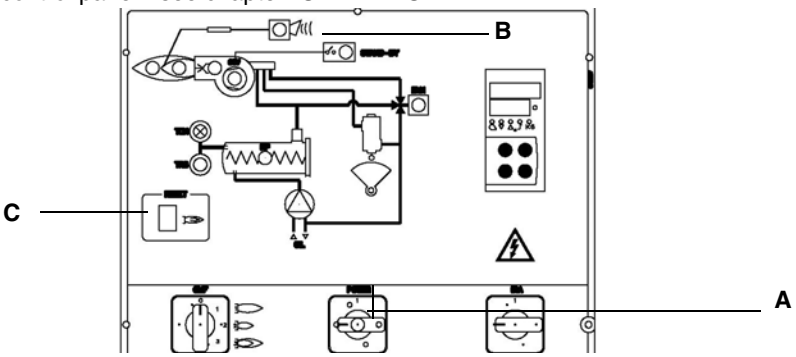

5 Start the burner up by means of the thermostat series and wait unitl the pre-purge phase comes to end and that burner starts up;

6 drive the burner to high flame stage, by means fo the thermostat **TAB**.

Then move progressively the microswitch to higher values until it reaches the high flame position; always check the combustion values (see next steps).

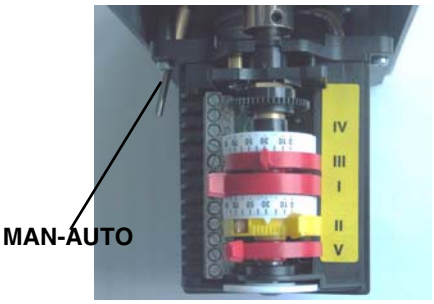

Berger STM30

Actuator cams

I	High flame
II	Stand-by and Ignition
III	Low flame

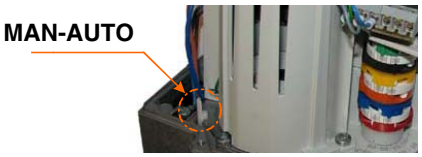

Siemens SQM40

7 the nozzle supply pressure is already factory-set and must not be changed. Only if necessary, adjust the supply pressure as follows (see related paragraph);insert a pressure gauge into the port shown on Fig. 18 and act on on the pump adjusting screw **VR** (see Fig. 17) as to get the nozzle pressure at 25bar (Fluidics nozzles - see diagram on page 21).

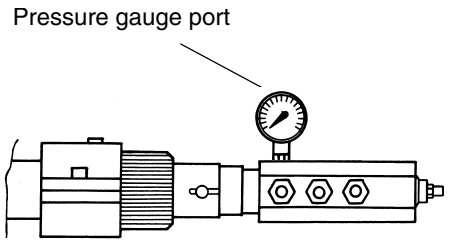

Fig. 18

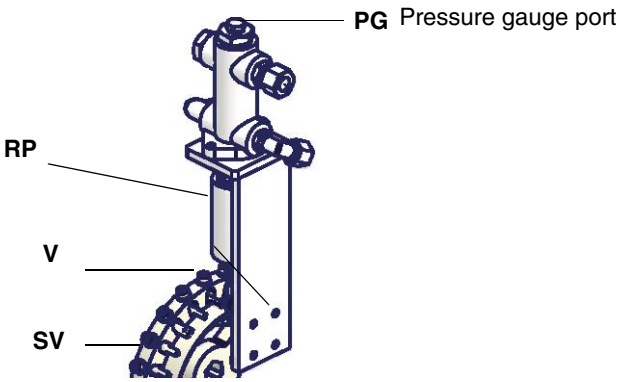

Fig. 20

8 in order to get the maximum oil flow rate, adjust the pressure (reading its value on the **PG** pressure gauge): checking always the combustion parameters, the adjustment is to be performed by means of the **SV** adjusting cam screw **V** (see picture) when the cam has reached the high flame position.

9 To adjust the **air flow rate in the high flame stage**, loose the **RA** nut and screw **VRA** as to get the desired air flow rate: moving the rod **TR** towards the air damper shaft, the air damper opens and consequently the air flow rate increases, moving it far from the shaft the air damper closes and the air flow rate decreases.

Note: once the procedure is perfomed, be sure that the blocking nut **RA** is fasten. Do not change the position of the air damper rods.

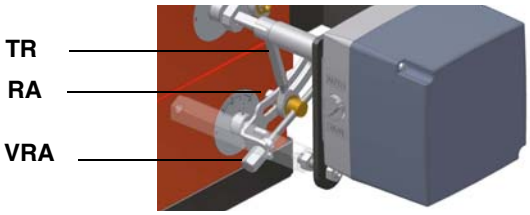

10 If necessary, change the combusiton head position: to let the burner operate at a lower output, loose the **VB** screw and move progressively back the combustion head towards the MIN position, by turning clockwise the **VRT** ring nut. Fasten **VB** screw when the adjustment is accomplished.

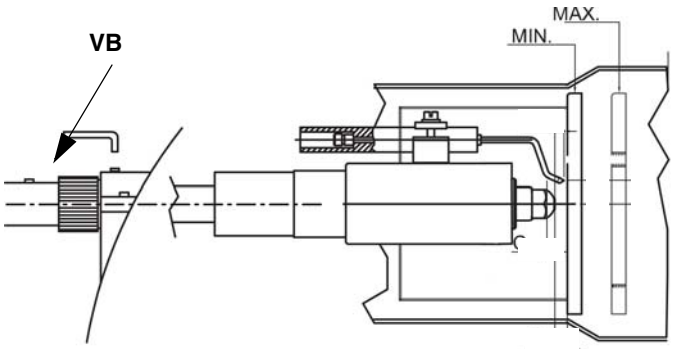

Attention! if it is necessary to change the head position, repeat the air and gas adjustments described above.

11 as for the point-to-point regulation in order to set the cam foil shape, move the low flame microswitch (cam III) a little lower than the maximum position (90°);

12 set the **TAB** thermostat to the minimum in order that the actuator moves progressively towards the low flame position;

13 move cam III towards the minimum to make the actuator move towards the low flame until the two bearings find the adjusting screw that refers to a lower position: screw **V** to increase the rate, unscrew to decrease, in order to get the pressure as showed on diagram on Fig. 15, according to the requested rate.

14 Move again cam III towards the minimum to meet the next screw on the adjusting cam and repeat the previous step; go on this way as to reach the desired low flame point.

15 The low flame position must never match the ignition position that is why cam **III** must be set 20°- 30° more than the ignition position.

Turn the burner off; then start it up again. If the adjustment is not correct, repeat the previous steps.

Adjustment by the Siemens SQL33.. actuator

1 with the electrical panel open, prime the oil pump acting directly on the related contactor (see next picture): check the pump motor rotation (see “Fan-pump motor direction” on page 10) and keep pressed for some seconds until the oil circuit is charged;

2 bleed the air from the **M** pressure gauge port (Fig. 21) by loosing the cap without removing it, then release the contactor.

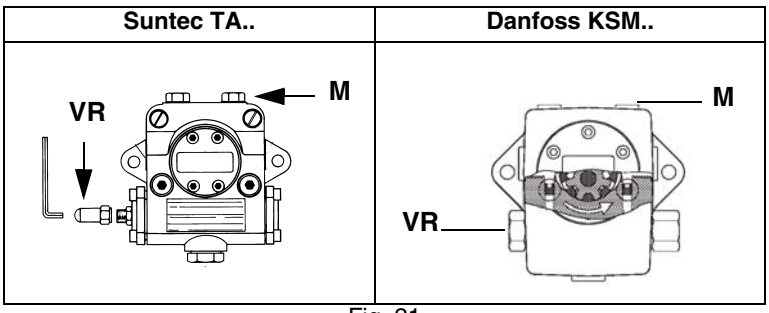

Fig. 21

3 Before starting the burner up, drive the high flame actuator microswitch matching the low flame one (in order to let the burner operates at the lowest output) to safely achieve the high flame stage.

4 Turn the burner on by means of its main switch **A** (see next picture): if the burner locks (LED **B** on in the control panel) press the RESET button (**C**) - see chapter “OPERATION”.

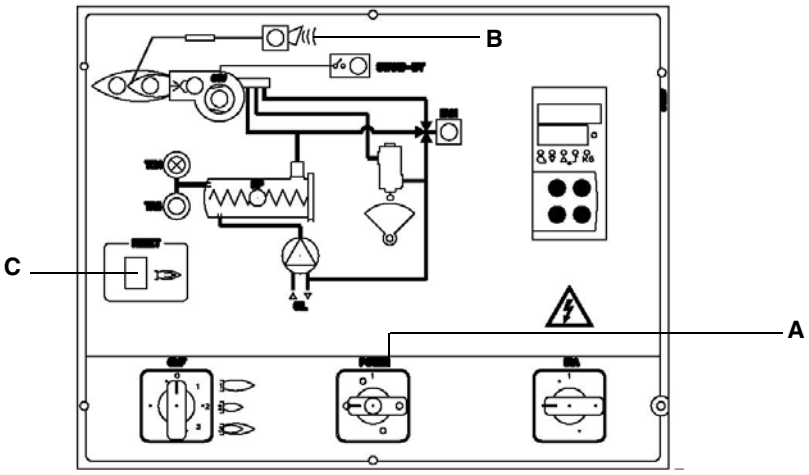

5 Start the burner up by means of the thermostat series and wait until the pre-purge phase comes to end and that burner starts up;

6 the burner starts up with the actuator on the ignition position, set it to the **MAN** (manual mode), by the **MAN/AUTO** selector (ignition position= read on the air damper index **ID**);

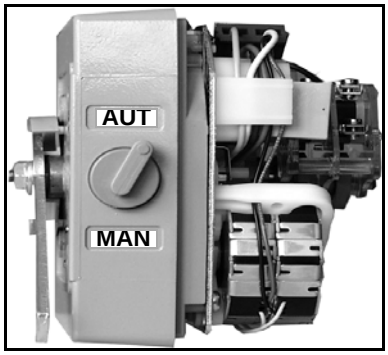

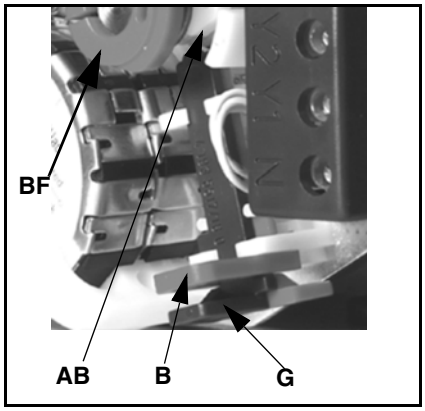

SQL33.. actuator cams

AB = High flame

BF = Low flame

B = plastic cam

G = cam locking lever

7 disconnect the **TAB** thermostat removing the wire from the terminal no. 6 or by setting MAN on the RWF40 modulator or by setting 0 by means of the **CMF** switch (only for fully-modulating burners);

8 set the actuator to the manual mode (MAN) by means of the MAN/AUTO switch (see next pictures).

9 manually drive the adjusting cam **SV** to the high flame position and set the actuator to the AUTO mode (by means of the related switch - see picture) to lock the adjusting cam.

The nozzle supply pressure is already factory-set and must not be changed. Only if necessary, adjust the supply pressure as follows (see related paragraph);insert a pressure gauge into the port showed on Fig. 22 and act on on the pump adjusting screw **VR** (see Fig. 21) as to get the nozzle pressure at 25bar (Fluidics nozzles - see diagramd on pag. 21).

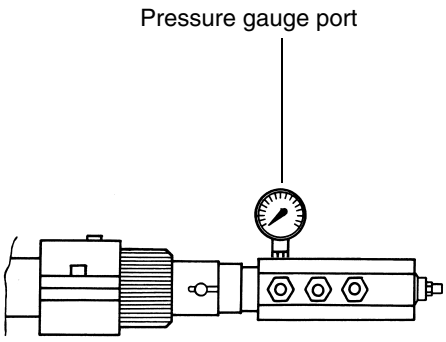

Fig. 22

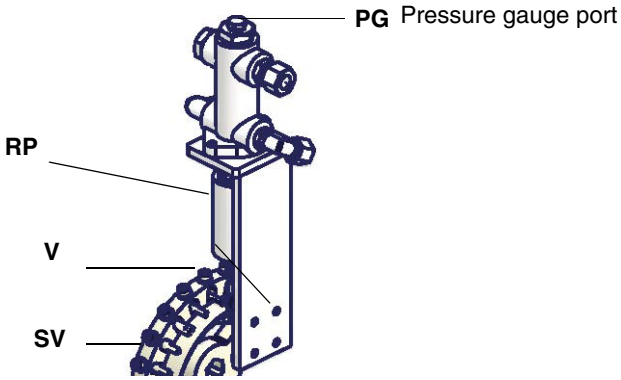

Fig. 23

10 in order to get the maximum oil flow rate, adjust the pressure (reading its value on the **PG** pressure gauge): always checking the combustion parameters, the adjustment is to be performed by means of the **SV** adjusting cam screw **V** (see picture) when the cam has reached the high flame position.

11 To adjust the **air flow rate in the high flame stage**, loose the **RA** nut and screw **VRA** as to get the desired air flow rate: moving the rod **TR** towards the air damper shaft, the air damper opens and consequently the air flow rate increases, moving it far from the shaft the air damper closes and the air flow rate decreases.

Note: once the procedure is perfomed, be sure that the blocking nut **RA** is fasten. Do not change the position of the air damper rods.

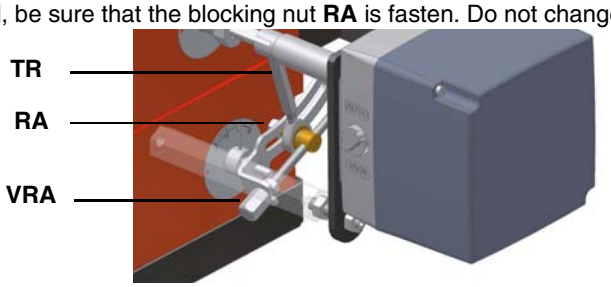

12 If necessary, change the combusiton head position: to let the burner operate at a lower output, loose the **VB** screw and move progressively back the combustion head towards the MIN position, by turning clockwise the **VRT** ring nut. Fasten **VB** screw when the adjustment is accomplished.

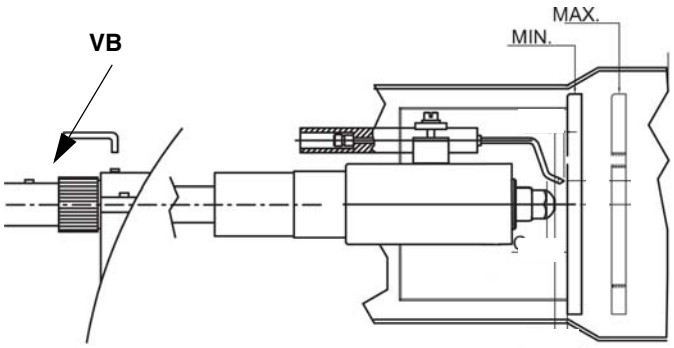

Attention! if it is necessary to change the head position, repeat the air and gas adjustments described above.

13 once the air and oil flow rate have been adjusted at the maximum output, go on with the point to point adjustment on the **SV** adjusting cam as to reach the minimum output point: gradually move the adjusting cam in order to adjust each of the **V** screws as to describe the cam foil shape.

14 to change the **SV** position set the actuator on the manual mode (MAN), turn the adjusting cam **SV** and set again the actuator to the AUTO mode to lock the adjusting cam;

15 act on the **V** screw that mathces the bearings referring to the adjusting cam position;

16 to adjust the next screw, set again the actuator mode to MAN, turn the adjusting cam and set the actuator to AUTO mode to lock the adjusting cam on the next screw; adjust it and go on this way to adjust all the screws in order to set the cam foil shape, according to the combustion values read.

17 Once the cam foil shape is defined, reconnect the **TAB** thermostat by reconnecting the wire to the terminal no.6 or setting the RWF40 burner modulator to AUTO or the CMF switch to 3 (only for fully-modulating burner).

18 Turn the burner off then start it up again.

19 Once the pre-purge time comes to end and the burner is on, drive the burner to the high flame stage by the **TAB** thermostat: check the combustion values;

20 drive the burner to low flame, if necessary adjust the low flame size (output) by inserting a screwdriver on the slot **F** to move the **BF** cam.

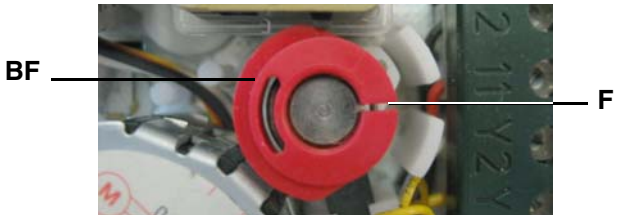

21 The low flame position must never match the ignition position that is why cam **BF** must be set 20°- 30° more than the ignition position.

22 Turn the burner off; then start it up again. If the adjustment is not correct, repeat the previous steps.

Calibration of air pressure switch (only for PN520 - PN525)

To calibrate the air pressure switch, proceed as follows:

- Remove the transparent plastic cap.
- Once air and heavy oil setting have been accomplished, startup the burner.
- During the pre-purge phase o the operation, turn slowly the adjusting ring nut **VR** in the clockwise direction until the burner lockout, then read the value on the pressure switch scale and set it to a value reduced by 15%.
- Repeat the ignition cycle of the burner and check it runs properly.
- Refit the transparent plastic cover on the pressure switch.

Fully-modulating burners

To adjust the fully-modulating burners, use the **CMF** switch on the burner control panel (see next picture), instead of the **TAB** thermostat as described on the previous paragraphs about the progressive burners. Go on adjusting the burner as described before, paying attention to use the CMF switch intead of **TAB**.

The **CMF** position sets the oprating stages: to drive the burner to the high-flame stage, set CMF=1; to drive it to the low-flame stage, set CMF=2.

To move the adjusting cam set CMF=1 or 2 and then CMF=0.

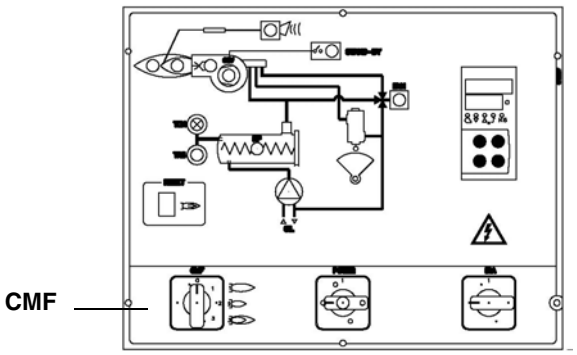

CMF = 0 stop at the current position
CMF = 1 high flame operation
CMF = 2 low flame operation
CMF = 3 automatic operation

Oil circuit

The fuel is pushed into the pump 1 to the nozzle 3 at the delivery pressure set by the pressure governor. The solenoid valve 2 stops the fuel immission into the combustion chamber. The fuel flow rate that is not burnt goes back to the tank through the return circuit. The spill-back nozzle is feeded at constant pressure, while the return line pressure is adjusted by means of the pressure governor controlled by an actuator coupled to an adjusting cam. The fuel amount to be burnt is adjusted by means of the burner actuator according to the adjustments set (see prevoius paragraph).

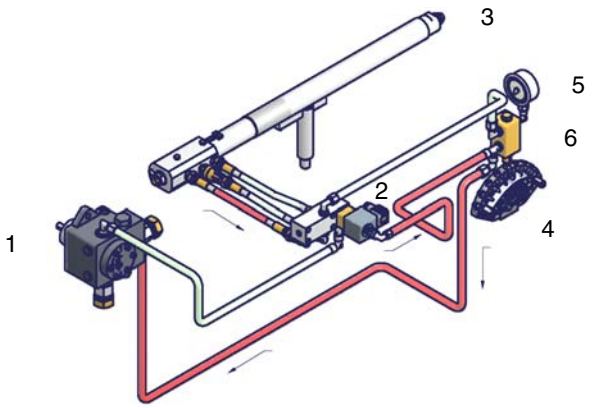

Fig. 24 - Stand-by

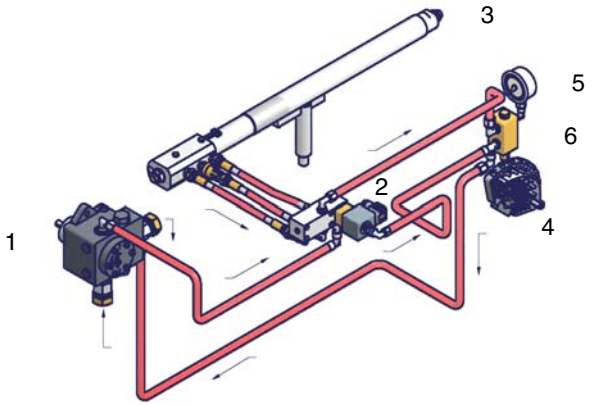

Fig. 25 - Prepurge

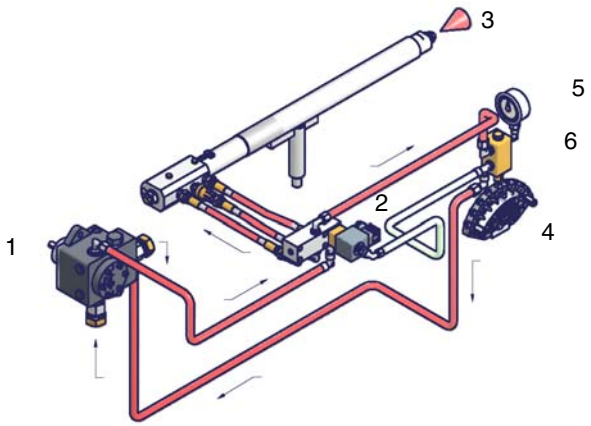

Fig. 26 - Low flame

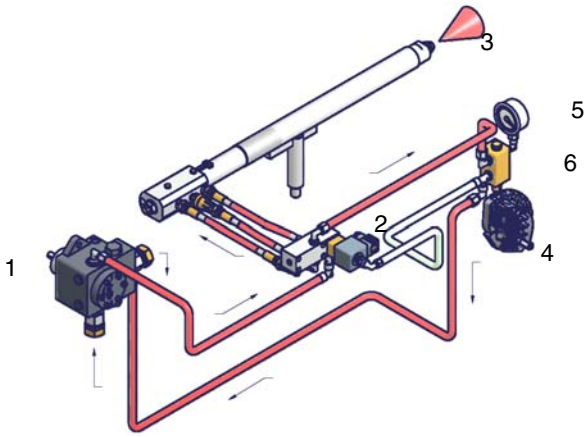

Fig. 27 - High flame

Key

1 Oil pump
2 Oil solenoid valve
3 Nozzle
4 Adjusting cam
5 Pressure gauge
6 Pressure governor

PART II: OPERATION

LIMITATIONS OF USE

THE BURNER IS AN APPLIANCE DESIGNED AND CONSTRUCTED TO OPERATE ONLY AFTER BEING CORRECTLY CONNECTED TO A HEAT GENERATOR (E.G. BOILER, HOT AIR GENERATOR, FURNACE, ETC.), ANY OTHER USE IS TO BE CONSIDERED IMPROPER AND THEREFORE DANGEROUS.

THE USER MUST GUARANTEE THE CORRECT FITTING OF THE APPLIANCE, ENTRUSTING THE INSTALLATION OF IT TO QUALIFIED PERSONNEL AND HAVING THE FIRST COMMISSIONING OF IT CARRIED OUT BY A SERVICE CENTRE AUTHORISED BY THE COMPANY MANUFACTURING THE BURNER.

A FUNDAMENTAL FACTOR IN THIS RESPECT IS THE ELECTRICAL CONNECTION TO THE GENERATOR'S CONTROL AND SAFETY UNITS (CONTROL THERMOSTAT, SAFETY, ETC.) WHICH GUARANTEES CORRECT AND SAFE FUNCTIONING OF THE BURNER.

THEREFORE, ANY OPERATION OF THE APPLIANCE MUST BE PREVENTED WHICH DEPARTS FROM THE INSTALLATION OPERATIONS OR WHICH HAPPENS AFTER TOTAL OR PARTIAL TAMPERING WITH THESE (E.G. DISCONNECTION, EVEN PARTIAL, OF THE ELECTRICAL LEADS, OPENING THE GENERATOR DOOR, DISMANTLING OF PART OF THE BURNER).

NEVER OPEN OR DISMANTLE ANY COMPONENT OF THE MACHINE.

OPERATE ONLY THE MAIN SWITCH, WHICH THROUGH ITS EASY ACCESSIBILITY AND RAPIDITY OF OPERATION ALSO FUNCTIONS AS AN EMERGENCY SWITCH, AND ON THE RESET BUTTON.

IN CASE OF A BURNER SHUT-DOWN, RESET THE CONTROL BOX BY MEANS OF THE RESET PUSHBUTTON. IF A SECOND SHUT-DOWN TAKES PLACE, CALL THE TECHNICAL SERVICE, WITHOUT TRYING TO RESET FURTHER.

WARNING: DURING NORMAL OPERATION THE PARTS OF THE BURNER NEAREST TO THE GENERATOR (COUPLING FLANGE) CAN BECOME VERY HOT, AVOID TOUCHING THEM SO AS NOT TO GET BURNT.

OPERATION

⚠	*ATTENTION:* before starting the burner up, be sure that the manual cutoff valves are open and check that the pressure upstream the gas train complies the value quoted on paragraph "Technical specifications".

N.B. be sure the cutoff valves on the delivery and return pipes are OPEN.

- Turn the burner on by means of its main switch **A** (see next pictures).
- Check that the burner is not locked (LED **E** lights up); if so, reset it by pressing the reset button **N**.
- Check that the series of thermostats (or pressure switches) enable the burner to start up.
- At the beginning of the start-up cycle the servo control drives the air damper to the maximum opening, the fan motor starts and the pre-purge phase begins. During the pre-purge phase the complete opening of the air damper is signalled by the indicator light F on the front panel.
- At the end of the pre-purge the ignition transformer is energised (signalled by the indicator light C on the panel). Two seconds later, the oil valve opens and the ignition transformer is de-energized (light C off).

The burner is now into operation, the servocontrol begins the opening, after few seconds the burner goes to two stages operation and eventually switches to the high flame operation, depending on the needs of the plant (light A, on) or continues with low flame operation (light B, on).

As far as fully-modulating burners, see the Siemens RWF40 burner modulator manual.

Control panel

PN91 - PN92 - PN93 - PN510

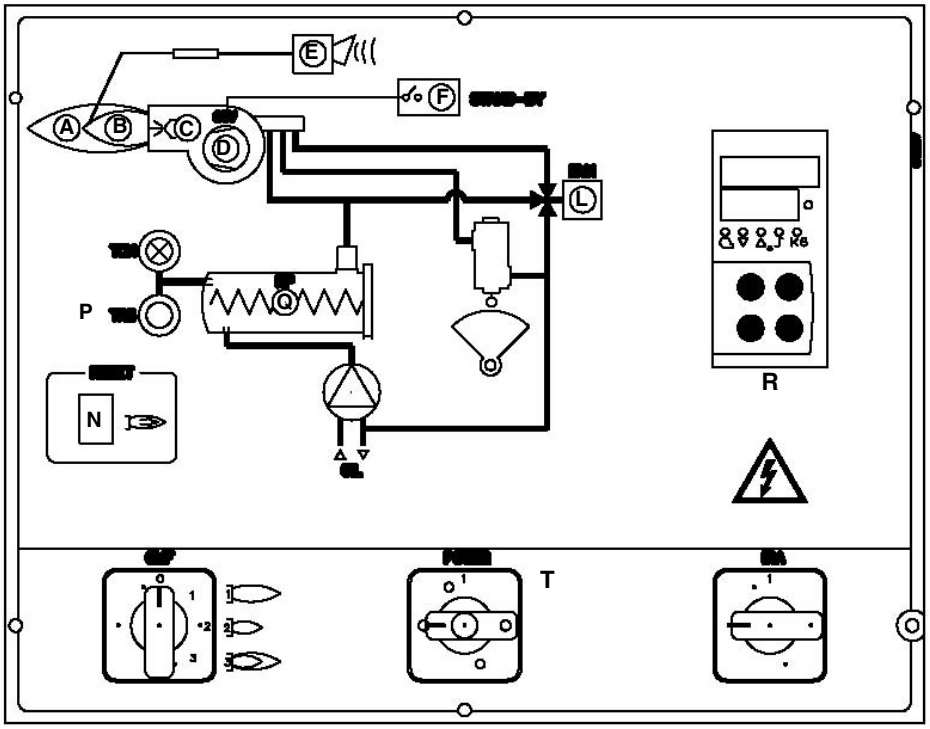

A	High flame lamp
B	Low flame lamp
C	Ignition transformer operation
CMF	Manual operation switch
	0= Off 1= High flame
	2= Low flame 3= Automatic
D	Fan motor thermal cutout intervention
E	Burner lockout
F	Burner in stand-by
IRA	Auxiliary resistors wsitch
L	Heavy oil solenoid lamp operation
N	Contrlol box reset pushbutton
P	Heating resistors safety thermostat
Q	Pre-heating tank
R	Modulator
T	Main switch

PN515 - PN520 - PN525

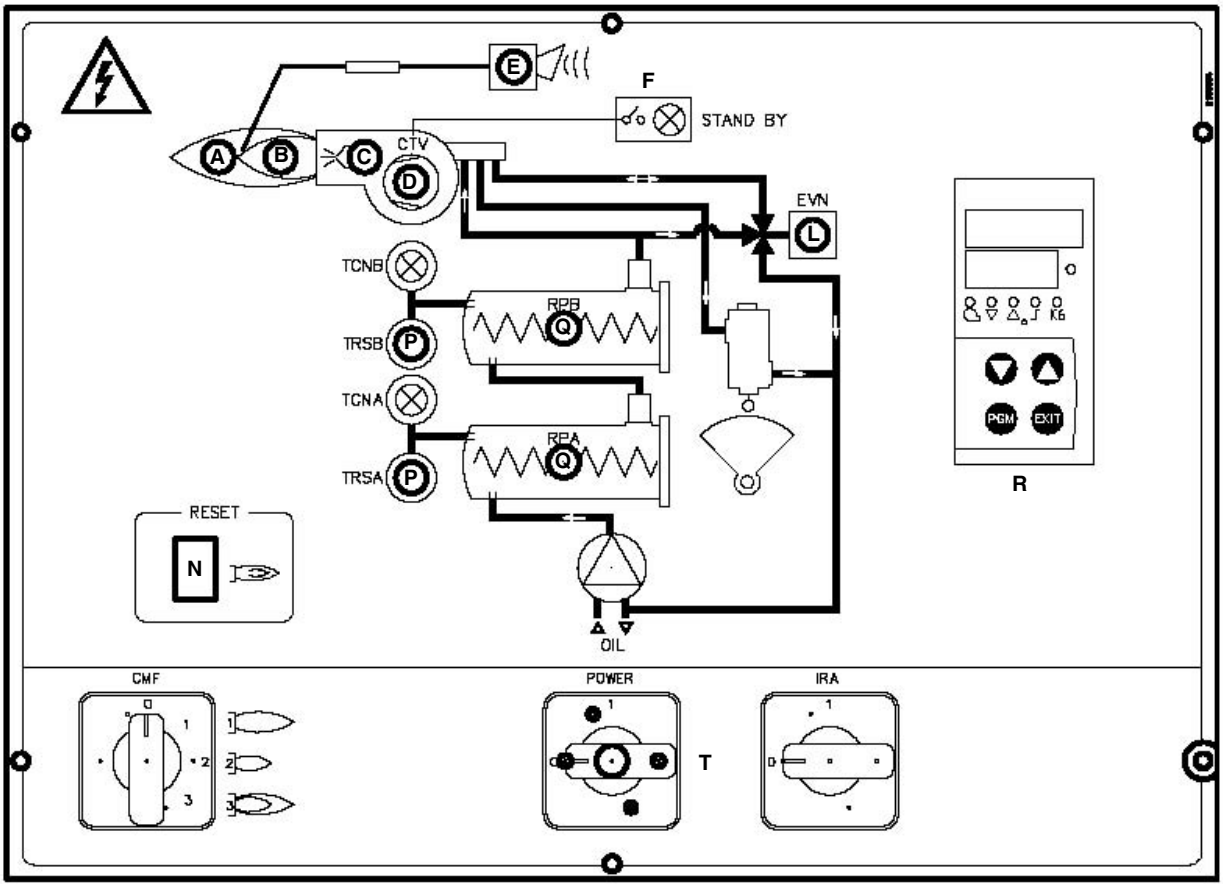

PART III: MAINTENANCE

At least once a year carry out the maintenance operations listed below. In the case of seasonal servicing, it is recommended to carry out the maintenance at the end of each heating season; in the case of continuous operation the maintenance is carried out every 6 months.

⚠	**WARNING: ALL OPERATIONS ON THE BURNER MUST BE CARRIED OUT WITH THE MAINS DISCONNECTED AND THE FUEL MANAUL CUTOFF VALVES CLOSED!**
	ATTENTION: READ CAREFULLY THE "WARNINGS" CHAPTER AT THE BEGINNIG OF THIS MANUAL..

ROUTINE MAINTENANCE

- Clean and examine the oil filter cartridge and replace it if necessary.
- Examine the condition of the oil flexible tubing and check for possible leaks.
- Check and clean if necessary the oil heaters and the tank, according to the fuel type and its use; remove the heaters flange fixing nuts and remove the heaters from the tank: clean by using steam or solvents and not metallic things.
- Clean and examine the filter inside the oil pump. Filter must be thoroughly cleaned at least once in a season to ensure correct working of the fuel unit. To remove the filter, unscrew the four screws on the cover. When reassemble, make sure that the filter is mounted with the feet toward the pump body. If the gasket between cover and pump housing should be damaged, it must be replaced. An external filter should always be installed in the suction line upstream of the fuel unit.
- Remove and clean the combustion head (page 32).
- Examine and clean the ignition electrodes, adjust and replace if necessary (see page 33).
- Examine and clean the detection probe, adjust and replace if necessary (see page 34).
- Examine the detection current (see page 34).
- Remove and clean (page 34) the heavy oil nozzle ***(Important: use solvents for cleaning, not metallic tools)*** and at the end of the maintenance procedures, after replacing the burner, turn it on and check the shape of the flame; if in doubt replace the nozzle. Where the burner is used intensively it is recommended to replace the nozzle as a preventive measure, at the begin of the operating season.
- Clean and grease joints and rotating parts.

IMPORTANT:Remove the combustion head before checking the ignition electrodes.

⚠	**CAUTION: avoid the contact of steam, solvent and other liquids with the electric terminals of the resistor.** **On flanged heaters, replace the seal gasket before refitting it.** **Periodic inspections must be carried out to determine the frequency of cleaning.**

Self-cleaning filter

Fitted only for oil viscosity >110 cSt @ 50 °C. Periodically turn the knob to clean the filter.

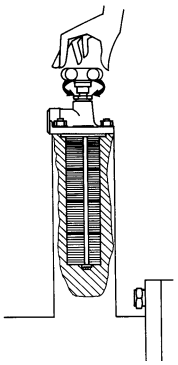

Removing the combustion head

- Remove the cover H.
- Slide the UV photoelectric cell out of its housing.
- Unscrew the oil connections E (Fig. 28) connecting the flexible pipes to the lance L and remove the whole assembly as shown in Fig. 28-Fig. 29.
- clean the combustion head by means of a vacuum cleaner; to scrape off the scale use a metallic brush.

Note: to replace the combustion head reverse the procedure described above.

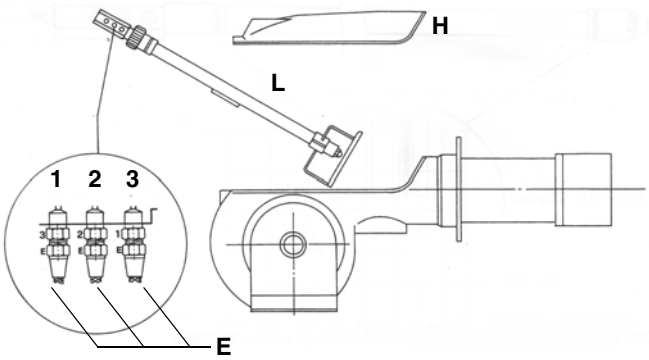

Fig. 25

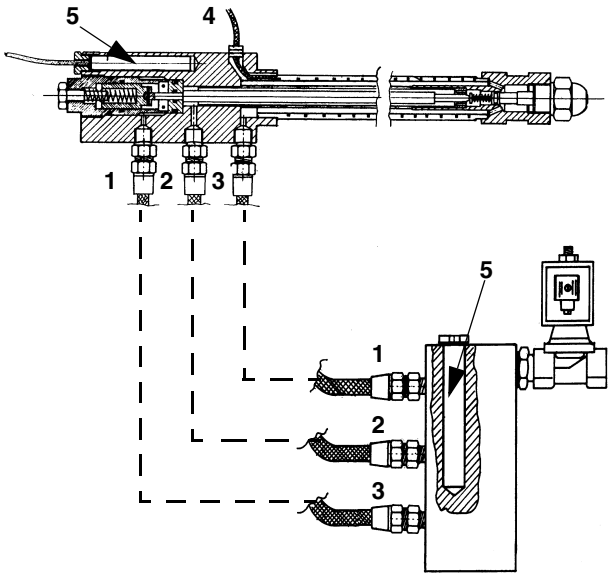

Fig. 26

Key

1 Inlet
2 Return
3 Lance opening
4 Heating wire (only for oil viscosity > 110 cSt @ 50 °C)
5 Cartdrige-type heater
H Cover
L Oil lance
E Oil piping connections

Removing the oil gun, replacing the nozzle and the electrodes

⚠	**ATTENTION:** avoid the electrodes to get in touch with metallic parts (blast tube, head, etc.), otherwise the boiler operation would be compromised. Check the electrodes position after any intervention on the combustion head.

To remove the oil gun, proceed as follows:

1 remove the combustion head as described on the previous paragraph;
2 loosen the **VU** screw and remove the oil gun: check the oil gun, replace it fi necessary;
3 after removing the oil gun, unscrew the nozzle and replace it if necessary;
4 in order to replace the electrodes, unscrew the **VB** fixing screws and remove them: place the new electrodes being careful to observe the measures shown on next paragraph: reassemlbe following the reversed procedure.

Caution: adjust the nozzle position, by means of the **VU** screw.

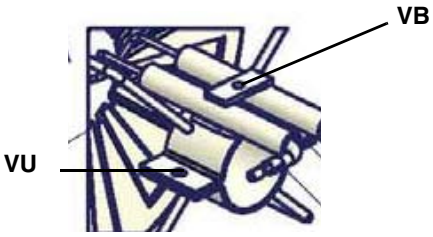

Fig. 27

Nozzle and electrodes correct position

Place the nozzle according to the combustion head; unscrew **VB** and move the combustion head. Check the ignition electrodes at the end of the procedure. Quotes are referred in mm.

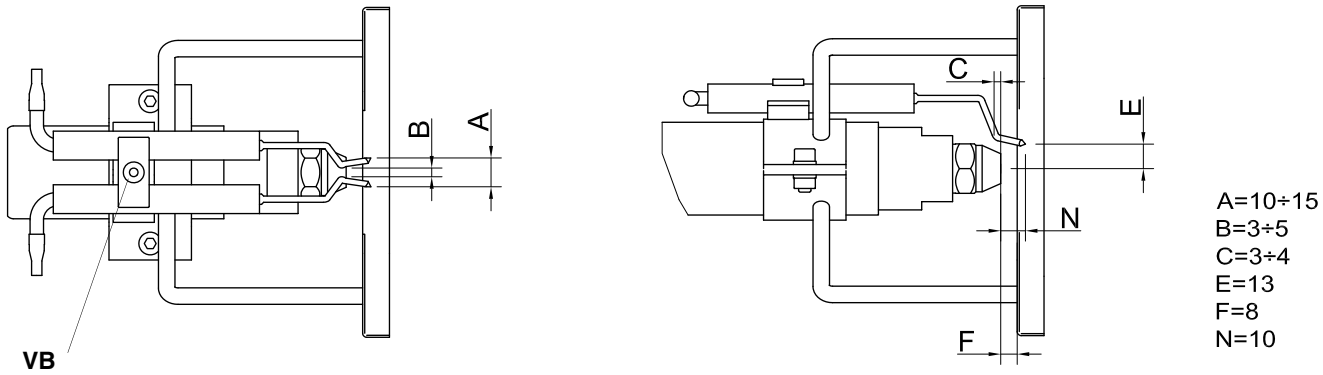

Fig. 28

Checking the detection current

To check the flame itensity signal, follow the diagram shown on the next picture. If the measured value is lower than the suggested one, check the photoresistor position, the electrical contacts. Replace the photoresistor if necessary.

PN91-PN92 - PN93: LMO44
PN510-PN515-PN520-PN525: LAL2.

Control box	Flame sensor	Minimum detection signal
LMO44	QRB4	45μA
LAL2..	QRB1	95μA

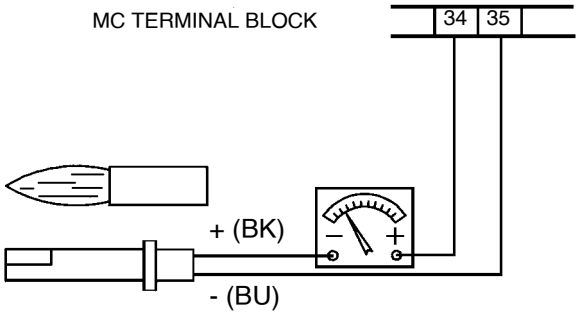

Fig. 29

Cleaning and replacing the detection photoresistor

When cleaning the photoresistive detector, always use a clean cloth. If necessary, remove it from its slot to replace it.

Seasonal stop

To stop the burner in the seasonal stop, proceed as follows:

1 turn the burner main switch to 0 (Off position)
2 disconnect the power mains
3 close the fuel valve of the supply line

Burner disposal

In case of disposal, follow the instructions according to the laws in force in your country about the “Disposal of materials”.

TROUBLESHOOTING

CAUSES/TROUBLES	DOES NOT START UP	CONTINUES PRE-PURGUE	BURNER STARTS UP WITH COLD OIL	DOES NOT IGNITE AND GOES TO SHUT DOWN	DOES NOT PASS TO HIGH FLAME	GOES TO SHUT DOWN DURING OPERATION	GOES OFF AND REPEATS THE CYCLE DURING OPERATION
MAIN SWITCH OFF	●						
LINE FUSES BLOWN	●						
MAXIMUM THERMOSTAT MALFUNCTION	●						
FAN THERMAL CUTOUT TRIPPED	●						
AUXILIARY FUSE BLOWN	●						
OIL RESISTOR FAULTY	●		●				
OIL ENABLING THERMOSTAT TRIPPED	●		●				
CONTROL UNIT MALFUNCTION	●	●		●	●	●	●
AIR SERVOCONTROL MALFUNCTION					●		
CIRCUIT ENABLING THERMOSTAT		●			●		
SMOKY FLAME						●	●
IGNITION TRANSFORMER FAULTY				●			
IGNITION ELECTRODES WRONGLY POSITIONED				●			
DIRTY NOZZLE				●		●	
FAULTY OIL VALVE				●			●
FAULTY OR DIRTY PHOTORESISTOR							●
FAULTY RESISTOR THERMOSTAT	●						
FAULTY HIGH-LOW FLAME THERMOSTAT					●		
ACTUATOR CAM NOT CALIBRATED					●		
LOW OIL PRESSURE				●		●	●

BURNER EXPLODED VIEW

ITEM	DESCRIPTION
1.1	NIPPLE
1.2	ELBOW
1.3	NIPPLE
1.4	PUMP
2.1.1	POWER CONTROLLER
2.1.2	FRONT CONTROL PANEL
2.1.3	LIGHT
2.1.4	LIGHT
2.1.5	LOCK-OUT RESET BUTTON
2.1.6	PROTECTION
2.1.7	SWITCH
2.1.8	SWITCH
2.2	BRACKET
2.3	BOARD
2.4	COVER
3.1.1	LONG IGNITION ELECTRODE
3.1.2	LONG IGNITION ELECTRODE
3.1.3	COMBUSTION HEAD
3.1.4	IGNITION CABLE
3.2	GUN TERMINAL
3.3	STANDARD COMPLETE OIL GUN
3.3.1.1	NIPPLE
3.3.1.2	RESISTOR FIXING SCREW
3.3.1.3	OIL MANIFOLD
3.3.1.4	RESISTOR
3.3.2	NOZZLE
3.3.3	NOZZLE HOLDER
3.4	OIL GUN HOLDER
3.5	COMBUSTION HEAD ADJUSTING PIPE
4.1	SPACER
4.2	FAN WHEEL
4.3	MOTOR
4.4	GAUGE RING
5.1	STRAIGHT UNION
5.2.1	OIL FILTER

ITEM	DESCRIPTION
5.2.2	GASKET
5.2.3	GAS BLEEDING VALVE
5.2.4	THERMOMETER
5.2.5	MUFF
5.3	COVER
5.4	REDUCTION
5.5	OIL PRE-HEATER
5.6	SHEATH
5.7	RESISTOR
6.1	NIPPLE
6.2	STRAIGHT JOINT
6.3	UNION ELBOW
6.4	OIL SOLENOID VALVE
6.5	REDUCTION
6.6	OIL MANIFOLD
6.7	CONNECTOR
7.1	UNION ELBOW
7.2	STRAIGHT UNION
7.3	UNION ELBOW
7.4	SCREW
7.5	ADJUSTING ROD
7.6	REDUCTION
7.7	WASHER
7.8	BUSH
7.9	BEARING
7.10	PRESSURE GOVERNOR
7.11	
7.12	BRACKET
7.13	BRACKET
8.1.1	SPACER
8.1.2	BUSH
8.1.3	ACTUATOR
8.1.4	ACTUATOR SHAFT
8.1.5	BRACKET
8.2	NET

ITEM	DESCRIPTION
8.3	AIR INTAKE DAMPER
8.4	AIR INTAKE DAMPER
8.5	AIR INTAKE
8.6	LOUVER SHAFT
8.7	LOUVER SHAFT
8.8	ADJUSTING CAM SHAFT
8.9	ADJUSTING CAM
8.10.1	SCREW
8.10.2	SCREW
8.10.3	SPACER
8.10.4	CAM
8.10.5	LEVERAGE
8.10.6	ROD
8.10.7	JOINT
8.10.8	JOINT
9.1	FAIRLEAD
9.2	FAIRLEAD
10	AIR INLET CONE
11	BURNER HOUSING
11.1	COVER
12	GENERATOR GASKET
13	RING NUT
14	INSPECTION GLASS
15	PHOTORESISTOR
16.1	PIN
16.2	ELASTIC RING
16.3	ELASTIC RING
16.4	HALF-COUPLING
16.5	HALF-COUPLING
16.6	HALF-COUPLING
16.7	HALF-COUPLING
17	BRACKET
18	RESISTOR
19	STANDARD BLAST TUBE

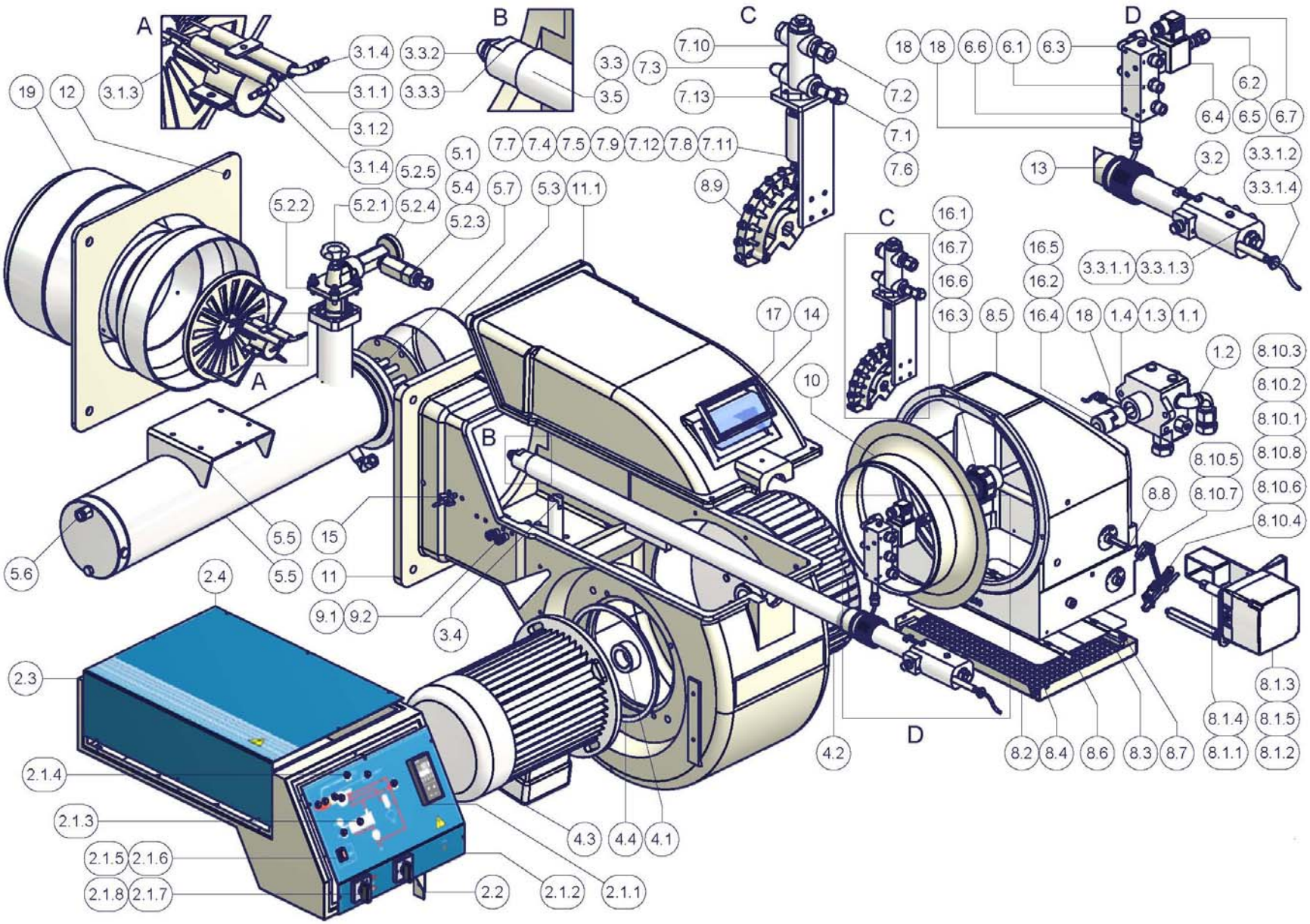
A
B
C
D
19
12
3.1.3
3.1.4
3.1.1
3.1.2
3.1.4
3.3.2
3.3.3
3.3
3.5
7.3
7.10
7.13
7.7
7.4
7.5
7.9
7.12
7.8
7.11
8.9
7.2
7.1
7.6
18
18
6.6
6.1
6.3
6.2
6.4
6.5
6.7
13
3.2
3.3.1.2
3.3.1.4
3.3.1.1
3.3.1.3
5.1
5.4
5.7
5.3
11.1
5.2.5
5.2.1
5.2.4
5.2.3
5.2.2
16.1
16.7
16.6
16.3
8.5
16.5
16.2
16.4
18
1.4
1.3
1.1
1.2
17
14
10
8.10.3
8.10.2
8.10.1
8.10.5
8.10.8
8.10.7
8.10.6
8.8
8.10.4
5.6
5.5
5.5
15
11
9.1
9.2
3.4
2.4
2.3
2.1.4
2.1.3
2.1.5
2.1.6
2.1.8
2.1.7
2.2
2.1.2
2.1.1
4.3
4.4
4.1
4.2
8.2
8.4
8.6
8.3
8.7
8.1.3
8.1.4
8.1.5
8.1.1
8.1.2

SPARE PARTS

DESCRIPTION	PN91	PN92	PN93
CONTROL BOX SIEMENS LMO	2020455	2020455	2020420
RIGHT ELECTRODE	2080250	2080250	2080250
LEFT ELECTRODE	2080251	2080251	2080251
FILTER FOR OIL VISCOSITY > 50 cSt @ 50°C	2090207	2090207	2090207
SELF-CLEANING PRE-HEATER FILTER	2090212	2090212	2090212
GASKET	2110048	2110048	2110047
FAN WHEEL	2150031	2150033	2150032
IGNITION TRANSFORMER	2170005	2170005	2170005
ELECTRIC MOTOR	2180276	2180277	2180206
SOLENOID VALVE	2190437	2190437	2190437
OIL HOSES	2340004	2340004	2340004
OIL GUN HOSES	2340087	2340087	2340087
OIL GUN HOSES	2340088	2340088	2340088
OIL GUN HOSES	2340091	2340091	2340091
ADJUSTING CAM FOIL	2440013	2440013	2440013
ACTUATOR mod. SIEMENS SQL..	2480007	2480007	2480007
ACTUATOR mod. BERGER STM30	2480090	2480090	2480090
ACTUATOR mod. SIEMENS SQM40	24800A5	24800A5	24800A5
PHOTORESISTOR SIEMENS	2510003	2510003	2510003
COUPLING	2540121	2540121	2540134
RESISTOR THERMOSTATTR-TCN-TCI	2560026	2560026	2560026
THERMOSTAT TRS	2560028	2560028	2560028
PRESSURE GOVERNOR FOR OIL VISCOSITY < 110 cSt @ 50 °C	2570054	2570054	2570077
PRESSURE GOVERNOR OIL VISCOSITY > 110 cSt @ 50 °C	25700A6	25700A6	25700A6
BURNER MODULATOR (only for fully-modulating burners)	2570112	2570112	2570112
PUMP mod. DANFOSS	2590310	2590310	2590311
PUMP mod. SUNTEC	2590118	2590118	2590119
NOZZLE mod. FLUIDICS WR2 50°	2610203	2610203	2610203
STANDARD OIL GUN FOR OIL VISCOSITY < 110 cSt @ 50 °C	2700331	2700331	2700331
EXTENDED OIL GUN FOR OIL VISCOSITY < 110 cSt @ 50 °C	2700332	2700332	2700332
STANDARD OIL GUN FOR OIL VISCOSITY > 110 cSt @ 50 °C	2700339	2700339	2700339
EXTENDED OIL GUN FOR OIL VISCOSITY > 110 cSt @ 50 °C	2700333	2700333	2700333
COMBUSTION HEAD	3060160	3060161	3060161
STANDARD BLAST TUBE	30910E2	30910E3	30910E3
EXTENDED BLAST TUBE	3091091	30910A2	30910A2
IGNITION CABLES	6050144	6050144	6050144

DESCRIPTION	PN510	PN515	PN520	PN525
CONTROL BOX SIEMENS LAL	2020420	2020420	2020420	2020420
RIGHT ELECTRODE	2080250	2080250	2080250	2080250
LEFT ELECTRODE	2080251	2080251	2080251	2080251
FILTER FOR OIL VISCOSITY > 50 cSt @ 50°C	2090207	2090207	2090207	2090207
SELF-CLEANING PRE-HEATER FILTER	2090212	2090212	2090212	2090212
GASKET	2110047	2110047	2110047	2110047
FAN WHEEL	2150032	2150035	2150029	2150029
IGNITION TRANSFORMER	2170005	2170005	2170005	2170005
ELECTRIC MOTOR	2180206	2180209	2180278	2180289
ELECTRIC MOTOR	-	-	2180210	2180210
SOLENOID VALVE	2190437	2190437	2190437	2190437
OIL HOSES	2340004	2340004	2340004	2340004
OIL GUN HOSES	2340087	2340087	2340087	2340087
OIL GUN HOSES	2340088	2340088	2340088	2340088
OIL GUN HOSES	2340089	2340089	2340089	2340089
ADJUSTING CAM FOIL	2440013	2440013	2440013	2440013
ACTUATOR mod. SIEMENS SQL..	2480007	2480007	2480007	2480007
ACTUATOR mod. BERGER STM30	2480090	2480090	2480090	2480090
ACTUATOR mod. SIEMENS SQM40	24800A5	24800A5	24800A5	24800A5
PHOTORESISTOR SIEMENS	2510003	2510003	2510003	2510003
COUPLING	2540122	2540122	2540126	2540126
RESISTOR THERMOSTATTR-TCN-TCI	2560026	2560026	2560026	2560026
THERMOSTAT TRS	2560028	2560028	2560028	2560028
PRESSURE GOVERNOR FOR OIL VISCOSITY < 110 cSt @ 50 °C	2570077	25700B2	25700B2	25700A7
PRESSURE GOVERNOR OIL VISCOSITY > 110 cSt @ 50 °C	25700A6	25700A7	25700A7	25700A7
BURNER MODULATOR (only for fully-modulating burners)	2570112	2570112	2570112	2570112
PUMP mod. DANFOSS	2590311	2590312	2590313	2590313
PUMP mod. SUNTEC	2590119	2590120	2590121	2590121
NOZZLE mod. FLUIDICS WR2 50°	2610203	2610203	2610203	2610203
STANDARD OIL GUN FOR OIL VISCOSITY < 110 cSt @ 50 °C	2700347	2700347	2700347	2700244
EXTENDED OIL GUN FOR OIL VISCOSITY < 110 cSt @ 50 °C	2700337	2700337	2700337	-
STANDARD OIL GUN FOR OIL VISCOSITY > 110 cSt @ 50 °C	2700348	2700348	2700348	2700245
EXTENDED OIL GUN FOR OIL VISCOSITY > 110 cSt @ 50 °C	2700338	2700338	2700338	-
COMBUSTION HEAD	3060167	3060164	3060165	30601C9
STANDARD BLAST TUBE	30910E4	30910E5	30910E6	30910L9
EXTENDED BLAST TUBE	30910A3	30910A4	30910A5	-
IGNITION CABLES	6050144	6050144	6050144	6050144

ELECTRICAL WIRING DIAGRAMS

Electrical diagram 07-345 - Burners type PN 91 - 92 -93 x-.PR...
Electrical diagram 07-403 - Burners type PN91 - 92 - 93 x-.MD..
Electrical diagram 11-275 - Burners type PN510 x-.PR...
Electrical diagram 11-294 - Burners type PN510 x-.MD...
Electrical wiring diagram 11-276 - Burners type PN515 D-.PR..
Electrical wiring diagram 11-277 - Burners type PN520 D-.PR...
Electrical wiring diagram 11-295 -Burners type PN515 D-.MD...
Electrical wiring diagram 11-296 - Burners type PN520 D-.MD...

SIEMENS OIL BURNERS AUTOMATIC CONTROLLER SIEMENS LMO14 - LMO24 - LMO44

The LMO... burner controls are designed for the start-up and supervision of single- or 2-stage forced draught oil burners in intermittent operation. Yellow-burning flames are supervised with photoresistive detectors QRB..., blue-burning flames with blue-flame detectors QRC...

In terms of housing dimensions, electrical connections and flame detectors, the LMO... are identical to the LOA... oil burner controls.

Preconditions for startup

- Burner control is reset
- All contacts in the line are closed
- No undervoltage
- Flame detector is darkened, no extraneous light

Undervoltage

- Safety shut-down in the operating position takes place should the mains voltage drop below about AC 165 V
- Restart is initiated when the mains voltage exceeds about AC 175 V

Time supervision oil pre-heater

If the oil pre-heater's release contact does not close within 10 minutes, the burner control will initiate lock-out.

Controlled intermittent operation

After no more than 24 hours of continuous operation, the burner control will initiate an automatic safety shut-down followed by a restart.

Control sequence in the event of fault

If lock-out occurs, the outputs for the fuel valves and the ignition will immediately be deactivated (< 1 second).

Cause	Response
After a mains failure	Restart
After voltage has fallen below the undervoltage threshold	Restart
In the event of a premature, faulty flame signal during «t1»	Lock-out at the end of «t1»
In the event of a premature, faulty flame signal during «tw»	Prevention of start-up, lock-out after no more than 40 seconds
If the burner does not ignite during «TSA»	Lock-out at the end of TSA
In the event the flame is lost during operation	Max. 3 repetitions, followed by lock-out
Oil pre-heater's release contact does not close within 10 min.	Lock-out

Lock-out

In the event of lock-out, the LMO... remains locked (lock-out cannot be changed), and the red signal lamp will light up. This status is also maintained in the case of a mains failure.

Resetting the burner

Whenever lock-out occurs, the burner control can immediately be reset. To do this, keep control the lock-out reset button depressed for about 1 second (< 3 seconds).

Ignition program with LMO24.113A2

If the flame is lost during «TSA», the burner will be reignited, but not later than at the end of «TSAmax.». This means that several ignition attempts can be made during TSA (refer to «Program sequence»).

Limitation of repetitions

If the flame is lost during operation, a maximum of 3 repetitions can be made. If the flame is lost for the 4th time during operation, the burner will initiate lock-out. The repetition count is restarted each time controlled switching on by «R-W-SB» takes place.

Operation

Lock-out reset button «EK...» is the key operating element for resetting the burner control and for activating / deactivating the diagnostic functions.

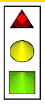

The multicolour «LED» is the key indicating element for both visual diagnosis and interface diagnosis.

s Red
l Yellow
o Green

Colour code table		
Status	Colour code	Colour
Oil pre-heater heats, waiting time «tw»	lllllllllll	Yellow
Ignition phase, ignition controlled	lmlmlmlmlml	Yellow-off
Operation, flame o.k.	oooooooooooo	Green
Operation, flame not o.k.	omomomomomo	Green-off
Undervoltage	lslslslslsl	Yellow-red
Fault, alarm	sssssssssss	Red
Output of fault code (refer to Fault code table)	smsmsmsmsm	Red-off
Extraneous light prior to burner start-up	osososososo	Green-red
Interface diagnosis	ssssssssssssss	Red flicker light

Key

m Off
l Yellow
o Green
s Red

Diagnosis of cause of fault

After lock-out, the red fault signal lamp remains steady on.

In that condition, the visual diagnosis of the cause of fault according to the error code table can be activated by pressing the lock-out reset button for more than 3 seconds.

Error code table	
Blink code	**Possible cause**
2 blinks **	No establishment of flame at the end of TSA ● Faulty or soiled fuel valves ● Faulty or soiled flame detector ● Poor adjustment of burner, no fuel ● Faulty ignition
3 blinks ***	Free
4 blinks ****	Extraneous light on burner startup
5 blinks *****	Free
6 blinks ******	Free
7 blinks *******	Too manny losses of fleme during operation (limitattion og the number of repetitions) ● Faulty or soiled fuel valves ● Faulty or soiled flame detector ● Poor adjustment of burner
8 blinks ********	Time supervision oil pre-heater
9 blinks *********	Free
10 blinks **********	Wiring error or internal error, output contacts

During the time the cause of fault is diagnosed, the control outputs are deactivated.

- Burner remains shut down
- Fault status signal «AL» at terminal 10 is activated

The diagnosis of the cause of fault is quit and the burner switched on again by resetting the burner control.

Press lock-out reset button for about 1 second (< 3 seconds).

Connection diagram and internal diagram

LMO14

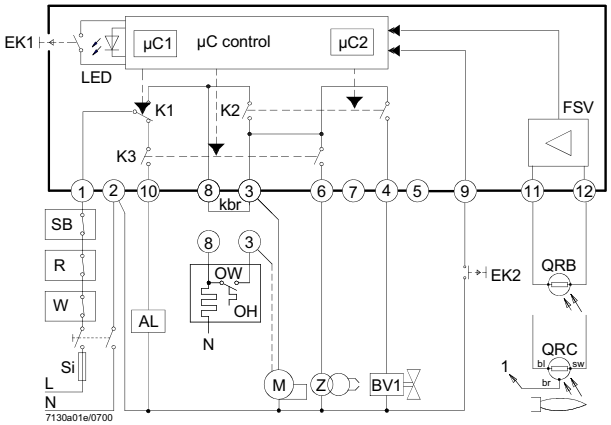

LMO24 - LMO44

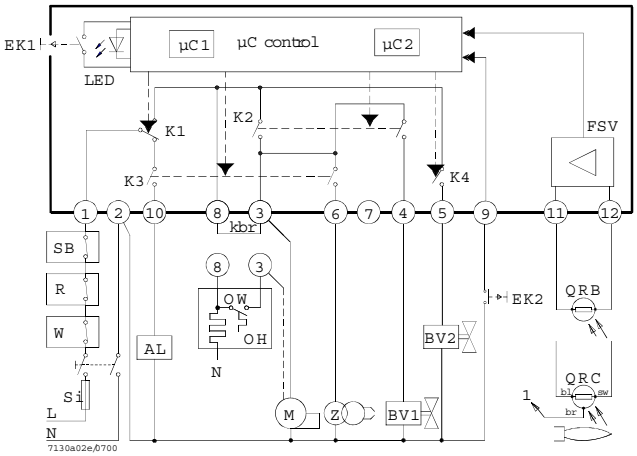

Control sequence

LMO14

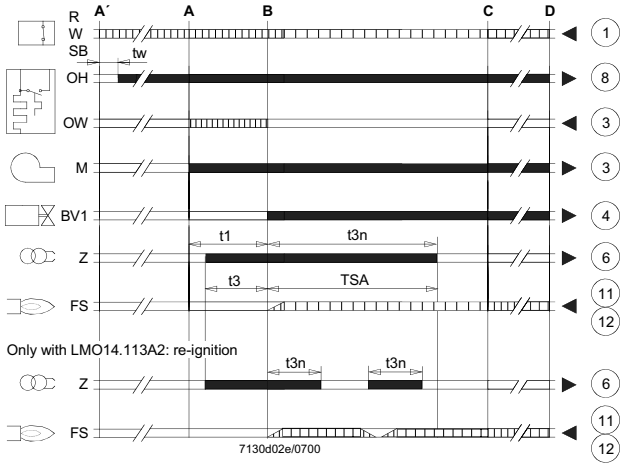

LMO24 - LMO44

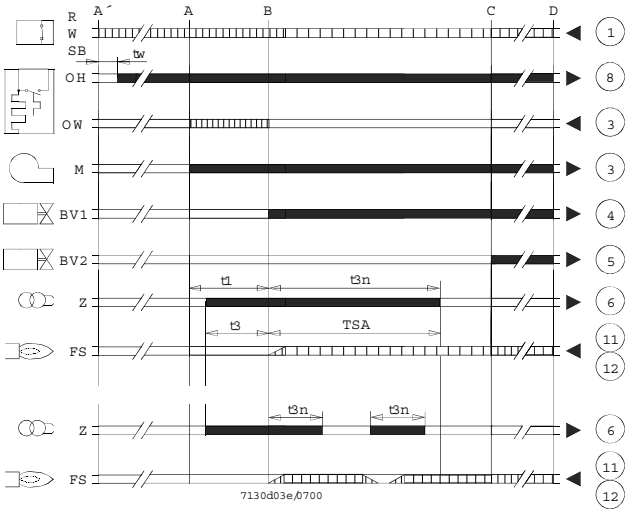

Key

AL	Alarm device
kbr...	Cable link (required only when no oil pre-heater is used)
BV...	Fuel valve
EK1	Lock-out reset button
EK2	Remote lock-out reset button
FS	Flame signal
FSV	Flame signal amplifier
K...	Contacts of control relay
LED	3-colour signal lamps
M	Burner motor
OW	Release contact of oil pre-heater
t1	Pre-purge time
t3	Pre-ignition time
t3n	Post-ignition time
A´	Beginning of start-up sequence with burners using an oil pre-heater
A	Beginning of start-up sequence with burners using no oil pre-heater
	Controller output signals
	Required input signals
OH	Oil pre-heater
QRB	Photoresistive detector
QRC	Blue-flame detector
bl = blue	
br = brown	
sw = black	
R	Control thermostat or pressurestat
SB	Safety limit thermostat
Si	External primary fuse
W	Limit thermostat or pressure switch
Z	Ignition transformer
t4	Interval from flame signal to release «BV2»
TSA	Ignition safety time
tw	Waiting time for oil pre-heating
B	Time of flame establishment
C	Operating position
D	Controlled shut-down by «R»
µC1	Microcontroller 1
µC2	Microcontroller 2

General unit data

Mains voltage	AC 230 V +10 % / -15 % AC 110 V +10 % / -15 %
Mains frequency	50...60 Hz ±6 %
External primary fuse	(Si) 5 A (slow)
Power consumption	12 VA
Mounting orientation	optional
Weight	approx. 200 g
Degree of protection	IP 40
Perm. cable lengths	max. 3 m at a line capacitance of 100 pF/m
Detector cable laid separately	20 m
Remote reset	20m

Max perm. amperage at cosφ≥ 0.6

	LMO14	LMO24-LMO44
Terminal 1	5 A	5 A
Terminals 3 and 8	3 A	5 A
Terminals 4, 5, 6 and 10	1 A	1 A

Flame supervision with QRB and QRC

	QRB	QRC
Min. detector current required (with flame)	45 µA	70 µA
Min detector current permitted (without flame)	5.5 µA	5.5 µA
Max. possible with flame (tipically)	100 µA	100 µA

Measurement circuit for detector current

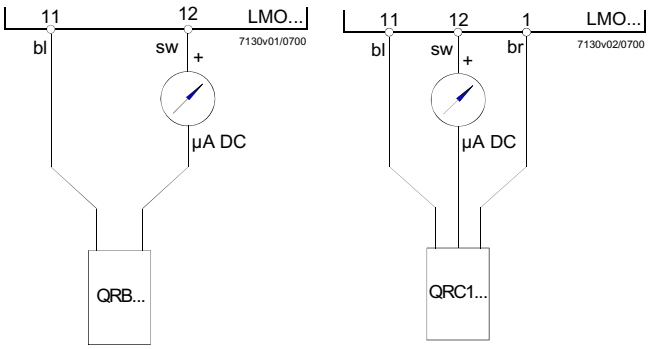

Key

µA DC	DC microamperometer with an internal resistance of 5 kΩ max.
bl	Blue
sw	Black
br	Brown

SIEMENS LAL.. CONTROL BOX

Use

- Control and supervision of oil atomization burners
- For burners of medium to high capacity
- For intermittent operation (at least one controlled shutdown every 24 hours)
- Universally applicable for multistage or modulating burners

Housing and plug-in base

- Made of impact-proof and heat-resistance black plastic
- Lockout reset button with viewing window; located behind it:
- Lockout warning lamp
- Lockout indicator coupled to the spindle of the sequence switch and visible in the transparent lockout reset button
- uses easy-to-remember symbols to indicate the type of fault and the point in time lockout occurred

Base and plug-in section of the LAL... are designed such that only burner controls of the LAL... family can be plugged in.

- 24 connection terminals
- Auxiliary terminals «31» and «32»
- 3 earth terminals terminating in a lug for earthing the burner
- 3 neutral conductor terminals prewired to terminal 2
- 14 knockout holes for cable entry by means of cable glands
- 8 at the side
- 6 in the bottom of the base
- 6 lateral threaded knockout holes for cable entry glands Pg11 or M20

Operation

Flame detector and flame simulation test are made automatically during burner off times and the prepurge time «t1». If loss of flame occurs during operation, the burner control will initiate lockout. If automatic repetition of the startup sequence is required, the clearly marked wire link on the plug-in section of the LAL... must be cut away.

Pre-conditions for burner startup

- Burner control is not in the lockout position
- Sequence switch is in its start position (with LAL2 voltage is present at terminals 11 and 12.
- Air damper is closed; end switch «z» for the CLOSED position must feed power from terminal 11 to terminal8.
- Contact of the limit thermostat or pressure switch «W» and the contacts of any other switching devices in the control loop between terminals 4 and 5 must be closed e.g. a control contact for the oil preheater's temperature
- Normally closed contact of the air pressure switch must be closed.

Startup sequence

Start command by «R»:

«R» closes the start control loop between terminals 4 and 5

- The sequence switch starts to run
- Only prepurging, fan motor at terminal 6 receives power
- Pre- and postpurging, fan motor or flue gas fan at terminal 7 receives power on completion of «t7»
- On completion of «t16», the control command for opening the air damper is delivered via terminal 9
- Terminal 8 receives no power during the positioning time
- The sequence switch continues to run only after the air damper has fully closed.

t1 Prepurge time with air damper fully open:

- The correct functioning of the flame supervision circuit is checked during «t1»
- The burner control will initiate lockout if correct functioning is not ensured.

With LAL2:

Shortly after the beginning of «t1», the air pressure switch must change over from terminal 13 to terminal 14 otherwise, the burner control will initiate lockout start of the air pressure check.

t3 Short preignition time:

«Z» must be connected to terminal 16, release of fuel via terminal 18.

t3' Long preignition time: «Z» connected to terminal 15.

t3n Postignition time:

- «Z» must be connected to terminal 15

- With short preignition, «Z» remains on until «TSA» has elapsed connection to terminal 16.

t4 Interval «BV1 – BV2» or «BV1 - LR»: On completion of «t4», voltage is present at terminal 19. The voltage is required to power «BV2» connected to auxiliary switch «v» in the actuator.

t5 Interval: On completion of «t5», terminal 20 receives power. At the same time, control outputs 9 to 11 and input 8 are galvanically separated from the LAL...'s control section.

LAL... is now protected against reverse voltages from the load control

circuit. With the release of «LR» at terminal 20, the startup sequence of the LAL... ends. After a few idle steps (steps with no contact position changes), the sequence switch switches itself off.

B Operating position of the burner

B-C Burner operation: during burner operation, «LR» drives the air damper to the nominal load or low-fire position, depending on heat demand; the release of the nominal load takes place via auxiliary switch «v» in the actuator and in the event of loss of flame during operation, the LAL... will initiate lockout. For automatic start repetition, the clearly marked wire link «B» on the plugin section of the LAL... must be cut away.

C Controlled shutdown: in the case of controlled shutdown, «BV...» will immediately be closed. At the same time, the sequence switch is started to program «t6»

C-D Sequence switch travels to start position «A»

t6 Postpurge time: fan «M2» connected to terminal 7. Shortly after the start of «t6», terminal 10 receives power and the air damper is driven to the MIN position. Full closing of the air damper starts only shortly before «t6» has elapsed initiated by the control signal at terminal 11. During the

following burner off time, terminal 11 is live.

t13 Permissible afterburn time: during «t13», the flame signal input may still receive a flame signal.

D-A End of control program: start position

As soon as the sequence switch has reached the start position – having thereby switched itself off – the flame detector and flame simulation test will start again.

During burner off times, the flame supervision circuit is live.

Lockout and indication of the stop position

Whenever a fault occurs, the sequence switch stops and with it the lockout indicator. The symbol appearing above the reading mark indicates the type of fault:

◀ No start. One of the contacts is not closed (also refer to «Preconditions for burner startup»):

Extraneous light:

Lockout during or after completion of the control program

Examples: nonextinguished flame, leaking fuel valves faulty flame supervision circuit.

▲ Interruption of startup. No OPEN signal at terminal 8 from the changeover end switch «a». Terminals 6, 7 and 15 are live until fault has been corrected

P Lockout**.** No air pressure indication at the beginning of the air pressure check. Air pressure failure after the air pressure check.

■ Defect in the flame supervision circuit.

▼ Interruption of the startup sequence. No positioning signal at terminal 8 from the auxiliary switch «m» for the low-fire position. Terminals 6, 7 and 15 are live until fault has been corrected.

1 Lockout. No flame signal at the end of the safety time.

I Flame signa has been lost during operation.

A Consenso all'avviamento (ad esempio tramite il termostato o il pressostato R dell'impianto

B Operating position of the burner

B-C Burner operation: during burner operation, «LR» drives the air damper to the nominal load or low-fire position, depending on heat demand; the release of the nominal load takes place via auxiliary switch «v» in the actuator and in the event of loss of flame during operation, the LAL... will initiate lockout. For automatic start repetition, the clearly marked wire link «B» on the plugin section of the LAL... must be cut away.

C Controlled shutdown: in the case of controlled shutdown, «BV...» will immediately be closed. At the same time, the sequence switch is started to program «t6»

C-D Sequence switch travels to start position «A».

During burner off times, the flame supervision circuit is live.

Lockout indication

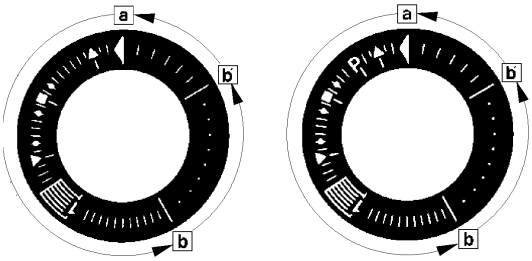

a-b Startup sequence

b-b' Idle step (with no contact confirmation)

b(b')-a Postpurge program

Burner control can immediately be reset after lockout:

Do not press the lockout reset button for more than 10 seconds

The sequence switch always travels to the start position first

After resetting

After rectification of a fault that led to shutdown

After each power failure

During this period of time, power is only fed to terminals 7 and 9...11.

Then, the LAL.... will program a new burner startup sequence

Specifications

Power supply	AC 230 V -15 / +10 %
for LAL2... on request AC 100 V -15 %...AC 110 V +10 %	
Frequency	50 Hz -6 %...60 Hz +6 %
Absorption	AC 3.5 VA
Mounting position	optional
Protection	IP 40
Perm. input current at terminal 1	AC 5 A max., 20 A peak
Perm. current rating of control terminals 3, 6, 7, 9...11, 15...20	4 A max., 20 A peak
Internal fuse	T6,3H250V according to IEC 127
External fuse	max. 10 A
Weight	Device 1000 g Plug-in base 165 g

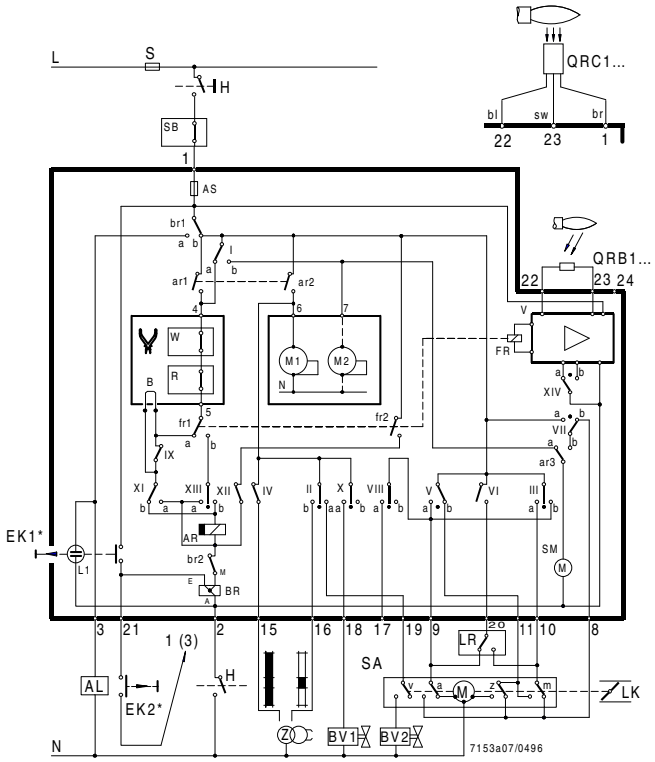

Sequence diagram

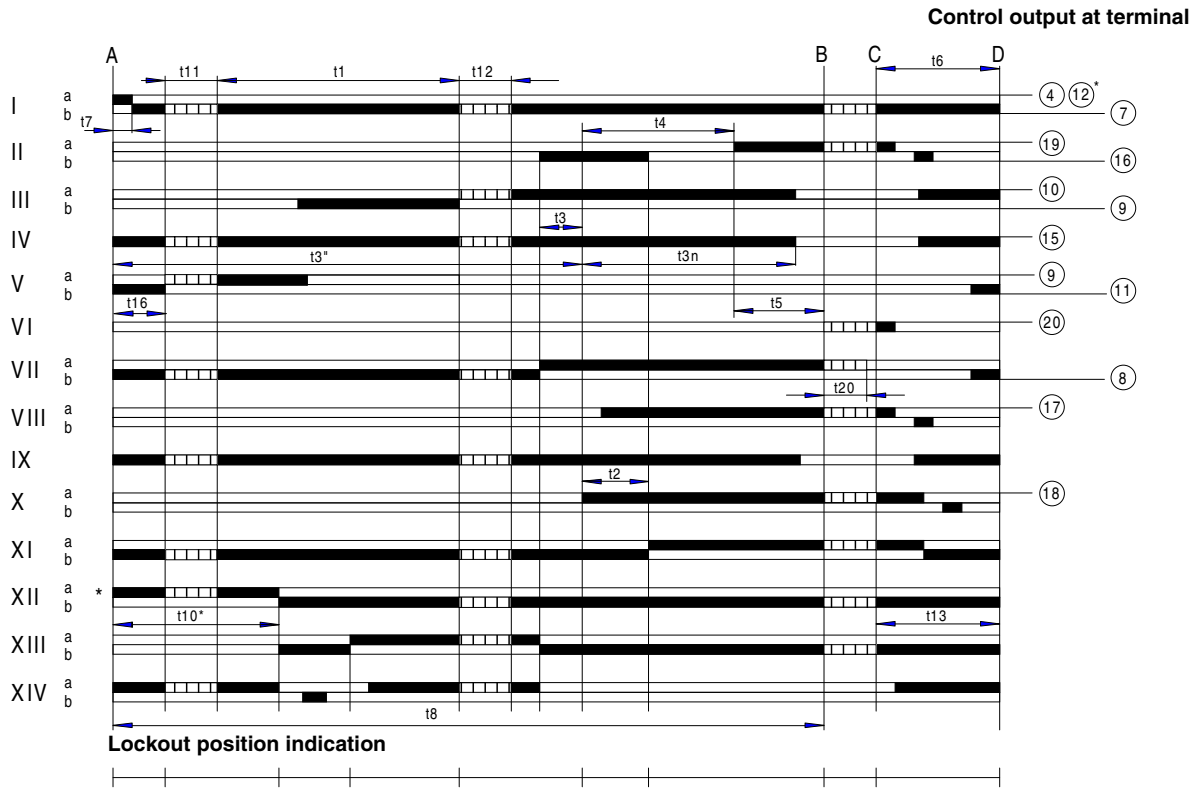

Key

t1	Prepurge time with air damper fully open
t2	Safety time
t3	Preignition time, short («Z» connected to terminal 16)
T3’	Preignition time, long («Z» connected to terminal 15)
t3n	Postignition time («Z» connected to terminal 15)
t4	Interval between voltage at terminals 18 and 19 («BV1-BV2»)
t5	Interval between voltage at terminals 19 and 20 («BV2» load controller)
t6	Postpurge time (with «M2»)
t7	Interval between start command and voltage at terminal 7 (start delay time for «M2»)
t8	Duration of startup sequence (excluding «t11» and «t12»)
t10	Interval from startup to the beginning of the air pressure check
t11	Air damper running time to the OPEN position
t12	Air damper running time to the low-fire position (MIN)
t13	Permissible afterburn time
t16	Interval to the OPEN command for the air damper
t20	For self-shutdown of the sequence switch

USER MANUAL OF MULTI-THERMOSTAT

MCX06C

MCX06C is a multi-thermostat with four 100k NTC inputs. It can control up to 4 temperatures showing them (not more than 2 at the same time) on a couple of displays.
It is used to check and adjust oil heater temperatures.

User interface:
Device:

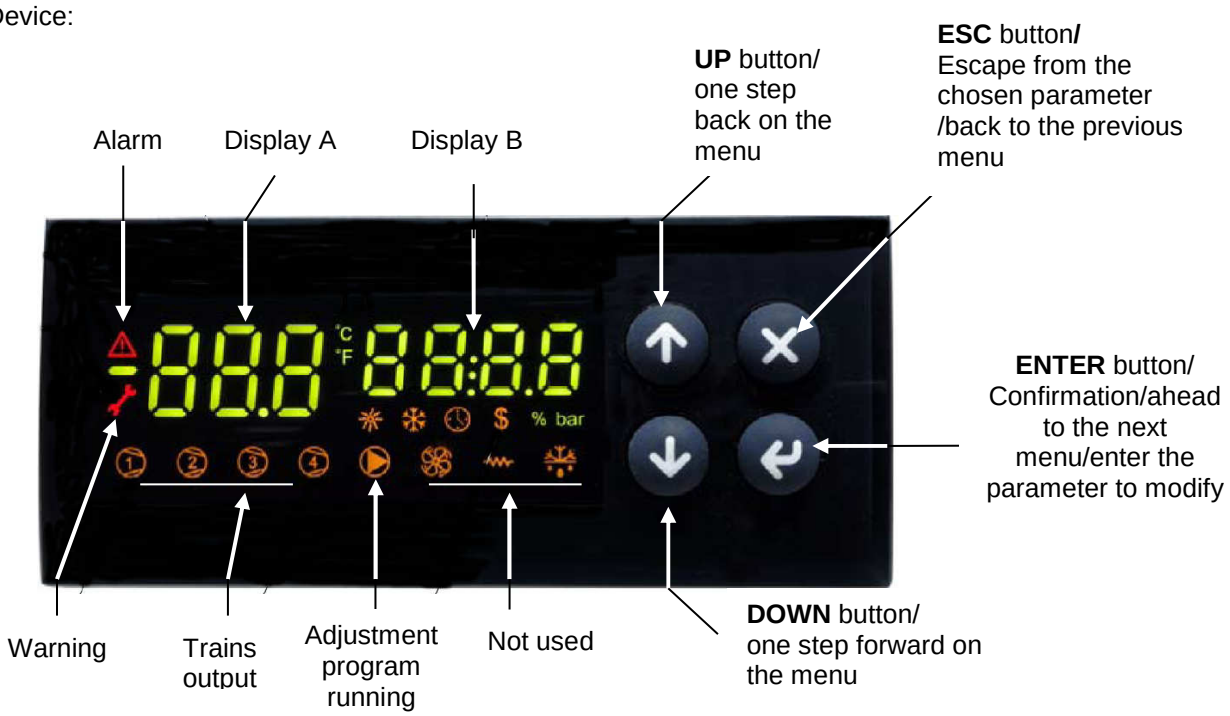

Note :
In normal operation, the display A shows the oil tank resistor temperature (probe Pb1).
In normal operation, the display B shows the oil output temperature (probe Pb3).

Connections from terminal side:

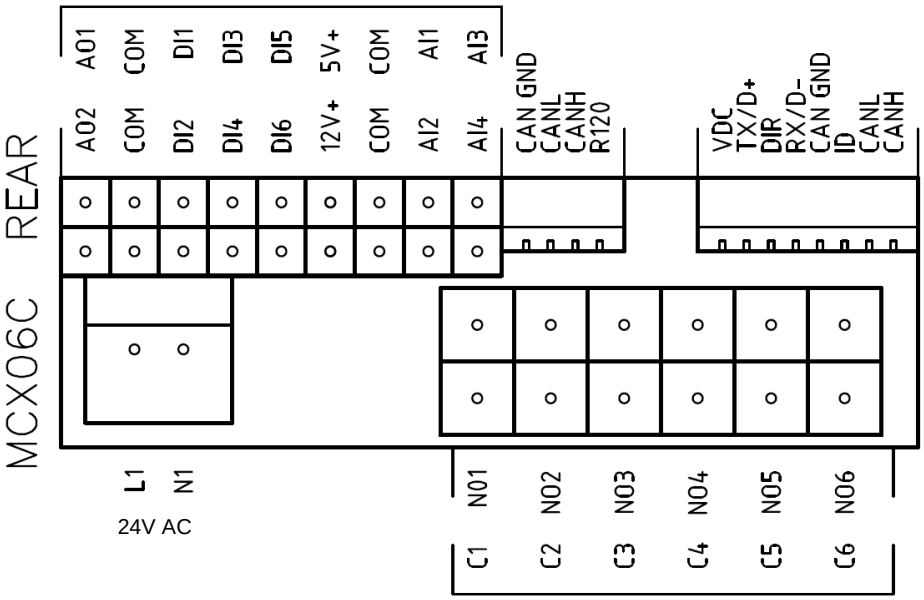

Probe connection:
input **AI1** = probe **Pb1** = set-point "**tr**" = oil heater temperature probe;
input **AI2** = probe **Pb2** = set-point "**tCI**" = plant consent temperature probe (when installed);
input **AI3** = probe **Pb3** = set-point "**OIL**" = oil heater output temperature probe (PID regulation);
input **AI4** = probe **Pb4** = set-point "**tcn**" = oil heater consent temperature probe.

Menu:
To enter the menu below, keep pushing **ENTER** for more than 3 s.

Menu code	Sub-menu code	Function	Notes
Prb		Probes values	You can see in sequence the 4 probe values (UP and DOWN keys): the probe code is on display A (Pb1,..., Pb4) and the probe value is on display B (not fitted or out of work probes show "----").
Log		Login	It defines the access level to menu and parameters (password)
	PAS	Password	Password input
Par		Parameters menu	Access to parameters (you have to login first)
	CnF	Configuration menu	Parameter configuration
	rEG	Regulation menu	Set to set-point, probe, thresholds etc.
ALA		Alarm menu	Access to alarm management
	Act	Active alarms	Show the active alarms
	rES	Reset alarms & Warning	Reset of the manual reset alarms and warning
Loc		Lock/Unlock functions	Not used
InF	rEL	Software version	Installed software version
tUN		Autotuning	Activation On, deactivation ESC PID parameter autotuning

Alarms & Warning:
When the red triangle on the top left lights, one or more alarms are activated.
When the red key on the left lights, the output N05-C5 is active and the relay **KTRS** switches the resistors OFF.
Check the reason, correct the failure and, as soon as the temperature is lower than **trS**, reset it through **ALA/rES .**
In order to show active alarms and warnings, select the relevant menu through **ALA/Act**.and, using the **UP** and **DOWN** buttons, scroll the lines.
In order to perform the manual reset, select **ALA/rES**.

Code	Description	Sourse	Active simbol	Reset type
trS	High temperature resistors alarm	probe Pb4 > value trS	red key	Manual
EP1	Probe Pb1 fault	Probe Pb1 fault	red triangle	Automatic
EP2	Probe Pb2 fault	Probe Pb2 fault	red triangle	Automatic
EP3	Probe Pb3 fault	Probe Pb3 fault	red triangle	Automatic
EP4	Probe Pb4 fault	Probe Pb4 fault	red triangle	Automatic

Set point adjustment:
All the parameters inside the **Par** menu are locked by a password.
The user can modify only set points (menu **rEG**), without using any passwords.
The oil viscosity at the nozzle, should be about 1,5°E, which guarantees correct and safe functioning of the burner.
The temperature values in the table, guarantee the respect of that parameter and are valid when the pre heating tank is installed on the burner. For different configurations , please refer to the chapter "Recommendations to design heavy oil feeding plants" in the burner manual.
Here below recommended set points:

Menu path				Oil viscosity at 50 °C according to the letter show n in the burner model				
				P	**N**	**E**	**D**	**H**
				89 cSt	< 50 cSt	> 50 cSt < 110 cSt	> 110 cSt < 400 cSt	> 400 cSt < 4000 cSt
				12 °E	< 7°E	> 7 °E < 15 °E	> 15 °E < 50 °E	> 50 °E < 530 °E
Par								
rEG	Pb1	tr	Oil heater temperature probe	parameter not visible				
	Pb2	tCI	Plant consent temperature probe (when installed)	20 °C	70 °C	70 °C	70 °C	---
	Pb3	Oil	oil heater output temperature probe (PID regulation);	60-70 °C	110-120 °C	120-130 °C	130-140 °C	140-150 ° C
		SP0	Set-point oil heater with oil pump stopped (stand-by)	45 °C	120 °C	130 °C	140 °C	150 °C
	Pb4	tcn	Oil heater consent temperature probe	40 °C	100 °C	100 °C	110 °C	120 °C
		trS	Safety temperature tank resistors (manual reset)	120 °C	190-200 °C	190-200 °C	190-200 °C	190-200 °C

The above temperature values are suggested and refer to a plant designed according to the prescriptions in the burner user manual. The suggested values can change in reference to the fuel oil specifications.

C.I.B. UNIGAS S.p.A.
Via L.Galvani, 9 - 35011 Campodarsego (PD) - ITALY
Tel. +39 049 9200944 - Fax +39 049 9200945/9201269
web site: www.cibunigas.it - e-mail: cibunigas@cibunigas.it

Note: specifications and data subject to change without notice. Errors and omissions excepted.

RWF55.5X & RWF55.6X

User manual

M12926CA Rel.0.2 11/2023

DEVICE INSTALLATION

Fixing system

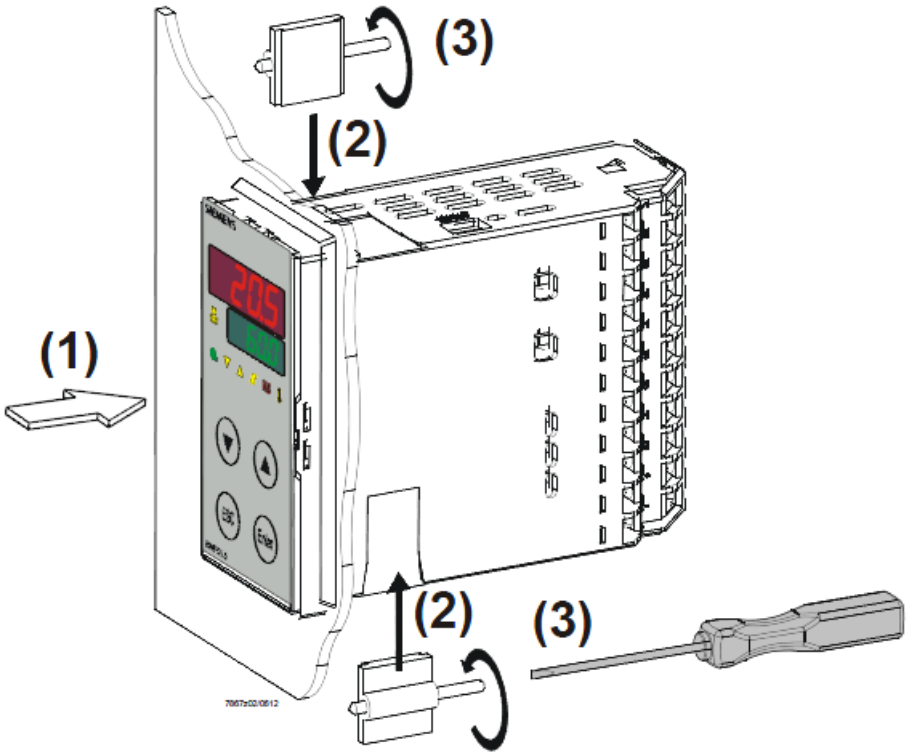

Drilling dimensions:

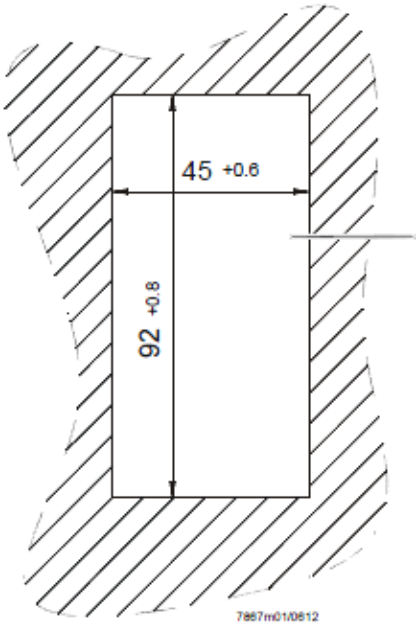

FRONT PANEL

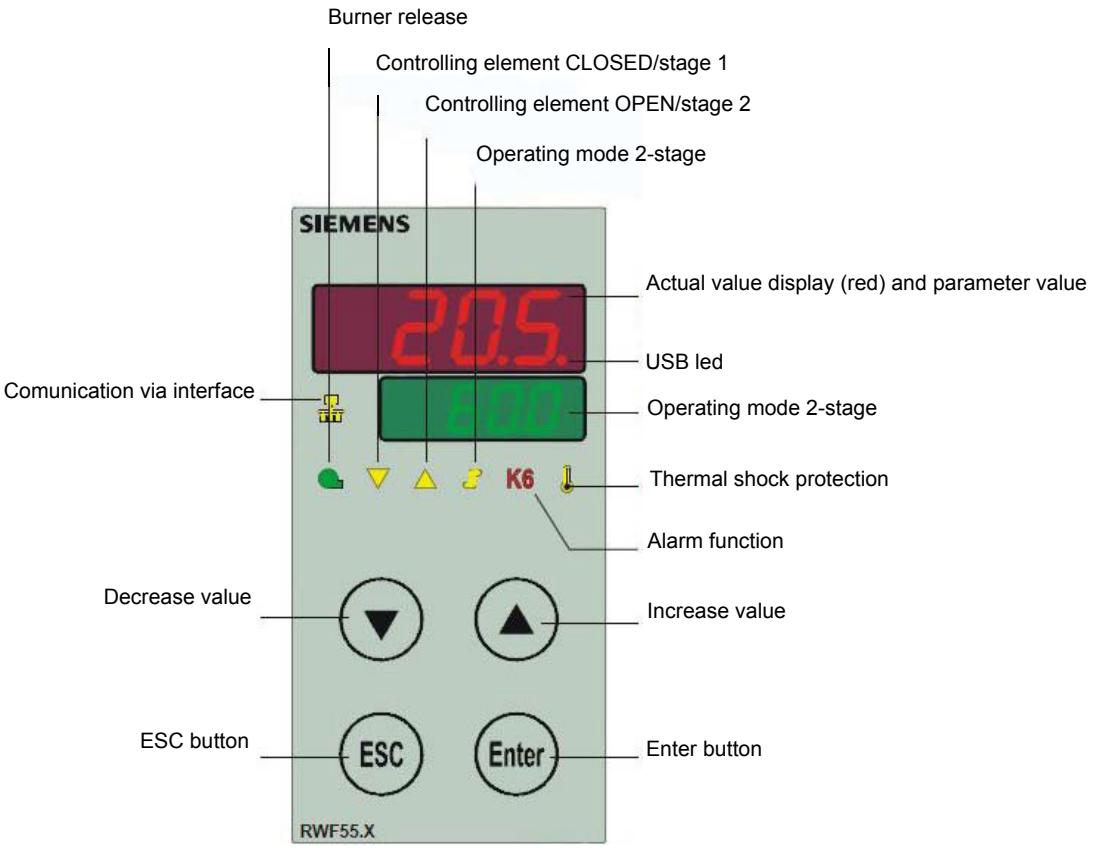
Burner release
Controlling element CLOSED/stage 1
Controlling element OPEN/stage 2
Operating mode 2-stage
SIEMENS
Actual value display (red) and parameter value
USB led
Comunication via interface
Operating mode 2-stage
K6
Thermal shock protection
Alarm function
Decrease value
Increase value
ESC button
ESC
Enter
Enter button
RWF55.X

NAVIGATION MENU

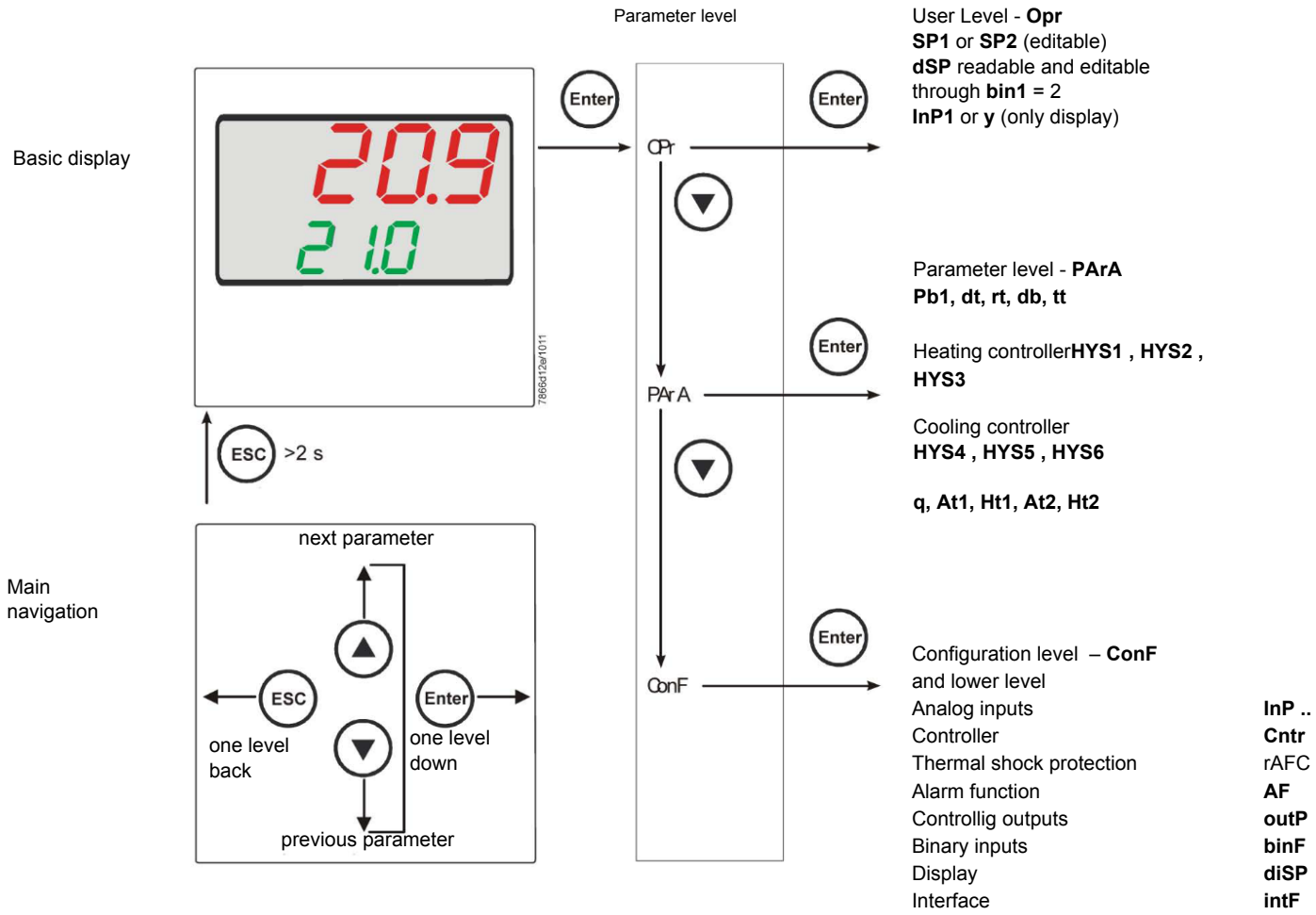

RWF55 is preset good for 90% of applications. However, you can set or edit parameters as follow:

Set-point: set or modification:

When the burner is in stand-by, (safety loop open, that is terminals 3-4/T1-T2 on the 7 pole plug open) push the Enter button: on the lower display (green) Opr appears; push Enter again and in the same display SP1 appears. Push Enter again and the lower display (green SP1) flashes. Using the up and down arrows change the set-point on the upper display (red).Push Enter to confirm and push ESC more times to get the home position.

PID parameters set and modifications (PArA):

Push **Enter** button, on the green display **Opr** appears; using the **down arrow,** scroll until group **PArA** is reached and push **Enter**.
On the green display **Pb1** e appears and on the red one the set parameter. Push is sequence the **down or up** arrow the menu is scrolled.
Push **Enter** to select and the **arrows** to choose the desired value. **Enter** to confirm

Parameter	Display	Range	Factory setting	Remarks
Proportional band	Pb1	1… 9999 digit	10	Typical value for temperature
erivative action	dt	0… 9999 sec.	80	Typical value for temperature
Integral action	rt	0… 9999 sec.	350	Typical value for temperatureT
Dead band (*)	db	0… 999,9 digit	1	Typical value
Servocontrol running time	tt	10… 3000 sec.	15	Set servocontrol running time
Switch-on differential (*)	HYS1	0,0… -1999 digit	-5	Value under setpoint below which the burner switches back on (1N-1P closes)
Switch-off differential 2° stage (*)	HYS2	0,0 … HYS3	3	(enable only with parameter bin1 = 4)
Upper switch-off differential (*)	HYS3	0,0… 9999 digit	5	Value over setpoint above which the burner switches off (1N-1P opens)
Switch-on differential on cooling controller (*)	HYS4	0,0… 9999 digit	5	Do not used (enable only with parameter **CACt** = 0)
Switch-off differential 2° stage on cooling controller (*)	HYS5	HYS6…0,0 digit	5	Do not used (enable only with parameter **CACt** = 0 and parameter **bin1**=0)
Upper switch-off differential on cooling controller (*)	HYS6	0,0… -1999 digit	5	Do not used (enable only with parameter CACt = 0)
Delay modulation	q	0,0… 999,9 digit	0	Do not alter
T Outside temperature Curve point 1 (*)	At1	-40 ...120 digit	-10	First point of external temperature for climatic curve
Boiler temperature Curve point 1 (*)	Ht1	SPL...SPH	60	Set-point temperature for the external temperature 1
TT Outside temperature Curve point 2 (*)	At2	-40 ...120 digit	20	Second point of external temperature for climatic curve
Boiler temperature Curve point 2 (*)	Ht2	SPL...SPH	50	Set-point temperature for the external temperature 2

(*) Parameters affected by setting of decimal place (**ConF > dISP** parameter **dECP**)

Setting the kind of sensor to be connected to the device:

Push the **Enter** button: on the lower display (green) **Opr** appears. Using the **up and down arrows** find **ConF.** Push **Enter** to confirm. Now on the green display the group **InP** appears. Push **Enter** and **InP1** is displaied. Enter to confirm.You are inside **InP1**; the green display shows **Sen1 (sensor type)**, while the red display shows the chosen sensor code Push **Enter** to enter the **Sen1** parameter, then choose the desired sensor using the **arrows.** Push **Enter** to confirm and **ESC** to escape.

Once selected the sensor, you can modify all the other parameters using **up and down arrows** according to the tables here below :

ConF > InP >InP1

Parameter	Value	Description
SEn1 type of sensor for analog input 1	1	Pt100 3 wire
	2	Pt100 2 wire
	3	Pt1000 3 wire
	4	Pt1000 2 wire
	5	Ni1000 3 wire
	6	Ni1000 2 wire
	7	0 ÷ 135 ohm
	8	Cu-CuNi T
	9	Fe-CuNi J
	10	NiCr-Ni K
	11	NiCrSi-NiSi N
	12	Pt10Rh-Pt S
	13	Pt13Rh-Pt R
	14	Pt30Rh-Pt6Rh B
	15	0 ÷ 20mA
	16	4 ÷ 20mA
	17	0 ÷ 10V
	18	0 ÷ 5V
	19	1 ÷ 5V
OFF1 Sensor offset	-1999..**0**.. +9999	Correction value measured by the sensor
SCL1 scale low level	-1999..**0**.. +9999	minimum scale value(for input ohm, mA, V)
SCH1 scale high level	-1999..**100**.. +9999	maximum scale value(for input ohm, mA, V)
dF1 digital filter	0…**0,6**…100	Is used to adapt the digital 2nd order input filter (time in s; 0 s = filter off)
Unit temperature unit	**1** 2	1 = **degrees** Celsius 2 = degrees Fahrenheit

(**bold** = factory settings)

ConF > InP >InP2

Input 2 : this input can be used to specify an external setpoint or carry out setpoint shifting

Parameter	Value	Description
FnC2	0 1 2 3	0= **no function** 1= external setpoint (display **SPE**) 2 =setpoint shifting (display **dSP**) 3 = angular positioning feedback
SEn2 tisensor type input 2	1	0 ÷ 20mA
	2	4 ÷ 20mA
	3	0 ÷ 10V
	4	0 ÷ 5V
	5	1 ÷ 5V
	1	0 ÷ 20mA
OFF2 Sensor offset	-1999..**0**.. +9999	Correction value measured by the sensor
SCL2 scale low level	-1999..**0**.. +9999	minimum scale value(for input ohm, mA, V)
SCH2 scale high level	-1999..**100**.. +9999	maximum scale value(for input ohm, mA, V)
dF2 digital filter	0…**2**…100	Is used to adapt the digital 2nd order input filter (time in s; 0 s = filter off)

(**bold** = factory settings)

ConF > InP >InP3

Input 3: this input is used to acquire the outside temperature

Parameter	Value	Description
SEn3 sensor type input 3sensor type input 2	0	0 =
	1	1 = wire
	2	2 = wire
OFF3 Sensor offset	-1999..**0**.. +9999	Correction value measured by the sensor
dF3 digital filter	0…**1278**…1500	Is used to adapt the digital 2nd order input filter (time in s; 0 s = filter off)

(**bold** = factory settings)

ConF > Cntr

Here, the type of controller, operating action, setpoint limits and presettings for self-optimization are selected

Parameter	Value	Description
CtYP controller type	1 2	**1 = 3-position controller (open-stop-close)** 2 = continuative action controller (0 ÷10V or 4 ÷ 20mA)
CACt control action	**1** 0	1 = **heating controller** 0 = cooling controller
SPL least value of the set-point range	-1999..**0**..+9999	minimum set-point scale
SPH maximum value of the set-point range	-1999..**100**..+999	maximum set-point scale
Self-optimization	0 1	0 = **Free** 1 = Locked Self-optimization can only be disabled or enabled via the ACS411 setup program. Self-optimization is also disabled when the parameter level is locked
oLLo set-point limitation start, operation limit low	**-1999**.... +9999	lower working range limit
oLHi set-point limitation end, operation limit high	-1999.... **+9999**	upper working range limit

(**bold** = factory settings)

ConF > rAFC

Activation boiler shock termic protetion:

RWF55.. can activate the thermal shock protection only on sites where the set-point is lower than 250°C and according to **rAL** parameter

Parameter	Value	Description
FnCT type of contol	**0** 1 2	tchoose type of range degrees/time **0 = deactived** 1 = Kelvin degrees/minute 2 = Kelvin degrees/hour
rASL ramp rate	**0,0 …** 999,9	Slope of thermal shock protection (only with functions 1 and 2) .
toLP tolerance band ramp	**2 x (HYS1) = 10**…9999	width of tolerance band (in K) about the set-point **0 = tolerance band inactive** 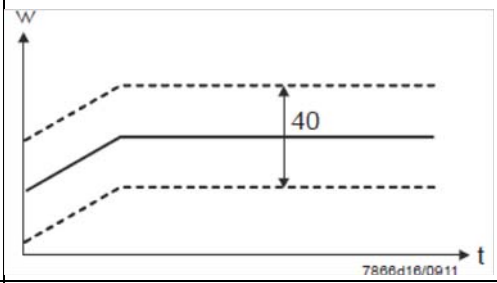
rAL ramp limit	**0**…250	Ramp limit. When this value is lower than the temperature set-point, the RWF controls the output increasing the temp set point step by step according to **rASL**. If this is over the temp set point, the control is performed in cooling

(**bold** = factory settings)

Alarm functionAF

The alarm function can be used to monitor the analog inputs. If the limit value is exceeded, multifunctional relay K6 (terminals **6N** and **6P**) is activated (depending on the switching characteristic)

The alarm function can have different switching functions (Ik1 to Ik8) and can be set to a deviation from the active setpoint or to a fixed limit value

Limit value **AL** relative to setpoint (x)

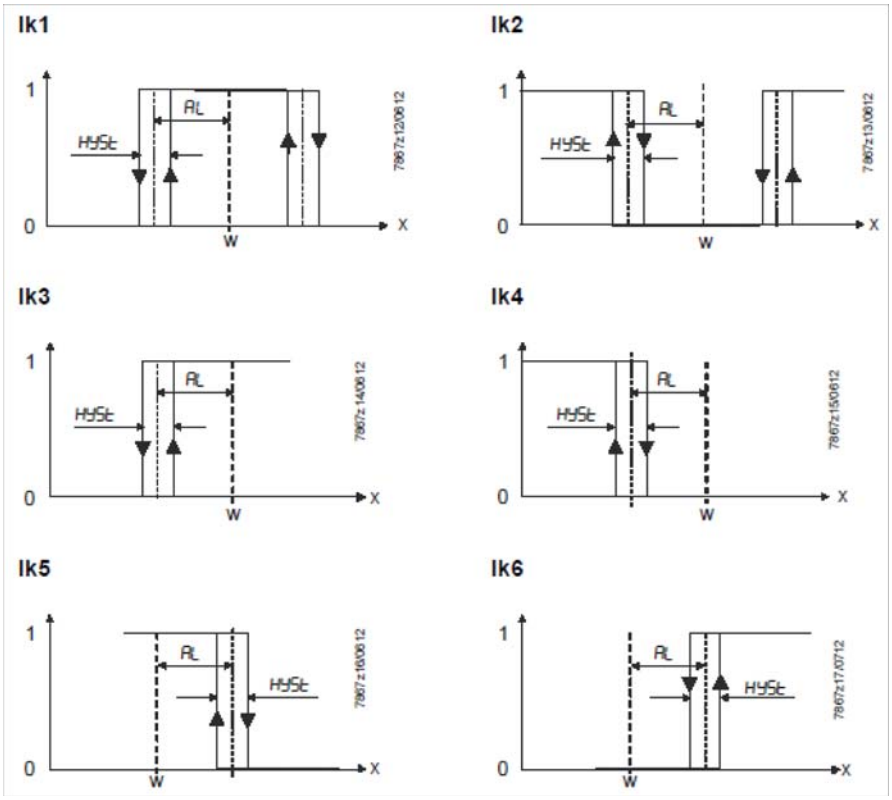

Fixed limit value **AL**

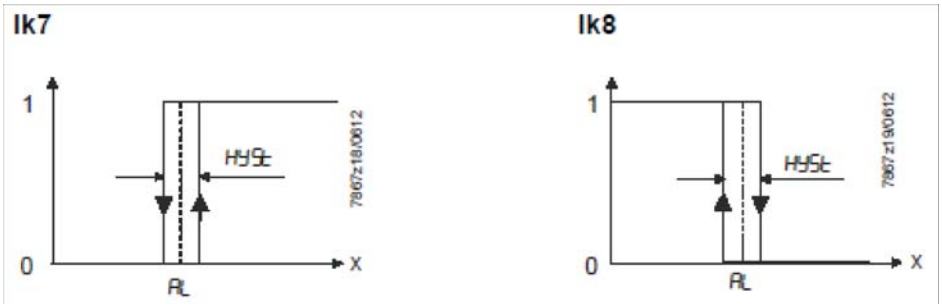

ConF > AF

Parameter	Value	Description
FnCt type of control	0 1 2 3 4 5 6 7 8 9 10 11 12	0 = **Without function** Ik1 = monitored input **InP1** Ik2 = monitored input **InP1** Ik3 = monitored input **InP1** Ik4 = monitored input **InP1** Ik5 = monitored input **InP1** Ik6 = monitored input **InP1** Ik7 = monitored input **InP1** Ik8 = monitored input **InP1** Ik7 = monitored input **InP2** Ik8 = monitored input **InP2** Ik7 = monitored input **InP3** Ik8 = monitored input **InP3**
Alarm value AL	-1999 ... **0** 1999	Limit value or deviation from setpoint to be monitored (see alarm functions **Ik1** to **Ik8**: limit value **AL**) Limit value range for **Ik1** and **Ik2**0 ...9999
HySt switching differential	0… **1**... 9999	Switching differential for limit value **AL**
ACrA response by out of range	**0** 1	**Switched-off** ON Switching state in the case of measuring range overshoot or undershoot (Out of Range)

(**bold** = factory settings)

ConF > OutP

For fuel-air ratio control purposes, the RWF55 has the binary outputs K2, K3 (terminals KQ,K2, K3) and the analog output (terminals A+, A-). The burner is released via relay K1 (terminals 1N, 1P) .

The binary outputs of the RWF55 offer no setting choices

The RWF55 has an analog output.

The analog output offers the following setting choices:

Parameter	Value	Description
FnCt type of control	1 2 3 **4**	1 = analog input 1 doubling with possibility to convert 2 = analog input 2 doubling with possibility to convert 3 = analog input 3 doubling with possibility to convert **4 = Controller's angular positioning is delivered (modulating controller)**
SiGn type of output signal	 **0** 1 2	physical output signal (terminals A+, A-) **0 = 0÷20mA** 1 = 4÷20mA 2 = 0÷10V DC
rOut value when out of input range	**0**…101	signal (in percent) when measurement range is crossed
oPnt zero point	-1999…**0**..+9999	A value range of the output variable is assigned to a physical output signal (for **FnCt** = 1, 2, 3)
End end point	-1999…**100**..+9999	A value range of the output variable is assigned to a physical output signal (for **FnCt** = 1, 2, 3)

(**bold** = factory settings)

ConF > binF

This setting decides on the use of the binary inputs**D1**, **D2**, **DG**

b

Parameter	Value	Description
bin1 binary imput 1 (terminals **DG – D1**)	**0** 1 2 3	**0 = without function** 1 = set-point changeover (SP1 / SP2) 2 = Iset-point shift (Opr > dSP parameter = value of set-point modify) 3 = input alarm
bin2 binary imput 2 (terminalsк **DG – D2**)	**4**	**changeover of operating mode** DG-D2 open = modulating operation DG-D2 close = 2 stage operation

(**bold** = factory settings)

ConF > dISP

.Both displays can be customized to suit your needs by configuring the displayed value, decimal, time out and blocking

Parameter	Value	Description
diSU pper display (red)	0 **1** 2 3 4 6 7	Display value for upper display: 0 = display power-off **1 = analog input 1 (InP1) value** 2 = analog input 2 (InP2) value 3 = analog input 3 (InP3) value 4 = controller's angular positioning 6 = set-point valueв 7 = end value with thermal shock protection
diSL lower display (green)	0 1 2 3 4 **6** 7	Display value for lower display3: 0 = display power-off 1 = analog input 2 (InP2) value 2 = analog input 2 (InP2) value 3 = analog input 2 (InP2) value 4 = controller's angular positioning **6 =** set-point valueв 7 = end value with thermal shock protection
tout timeout	0..**180**..250	time (s) on completion of which the controller returns automatically to the basic display, if no button is pressed
dECP decimal point	**0** 1 2	**0 = no decimal place** 1 = one decimal place 2 = two decimal place
CodE level lockout	**0** 1 2 3	**0 = no lockout** 1 = configuration level lockout (**ConF**) 2 = parameter and configuration level lockout (**PArA** & **ConF**) 3 = keyboard lockout

(**bold** = factory settings)

ConF > IntF

The controller can be integrated into a data network using an optional RS-485 (terminals R+ and R-) interface or an optional Profibus DP interface(only model**RWF55.6x** terminalsC1-C2-C3-C4)

Parameter	Value	Description
bdrt baudrate	**0** 1 2 3	**0 = 4800 baud** 1 = 9600 baud 2 = 19200 baud 3 = 38400 baud
Adr Device address Modbus	0.. **1**.. 254	Address in the data network
dP Device address Profibus	0..**125**	only withRWF55.6x
dtt Remote detection time	0.. **30**.. 7200s	0 = swiched-off

(**bold** = factory settings)

Manual control :

In order to manual change the burner load, while firing keep pushing the **ESC** button for more than 5 s; on the lower green display **Hand** appears.

using the **UP** and **DOWN** arrows, the load varies.

Keep pushing the **ESC** button for getting the normal operation again.

NB: every time the device shuts the burner down (start led switched off - contact 1N-1P open), the manual control is not active.

Device self-setting (auto-tuning):

If the burner in the steady state does not respond properly to heat generator requests, you can activate the Device's self-setting function, which recalculates PID values for its operation, deciding which are most suitable for the specific kind of request

Follow the below instructions:

push the **UP** and **DOWN** arrows for more than 5 s; on the green lower display **tUnE** appears. Now the device pushes the burner to increase and decrease its output. During this time, the device calculates **PID** parameters (**Pb1**, **dt** and **rt**). After the calculations, the **tUnE** is automatically deactivated and the device has already stored them.

In order to stop the Auto-tuning function while it works, push again the **UP** and **DOWN** arrows for more than 5 s. The calculated **PID** parameters can be manually modified following the previously described instructions.

Display of software version :

The software version is shown by pushing Enter + UP arrow on the upper display.

Weather-compensated setpoint shifting(climatic regulation):

The RWF55 can be configured so that weather-compensated setpoint shifting is activated when an LG-Ni1000 outside sensor or a Pt1000 is connected (see parameter **InP3**).

To take into account the time response of a building, weather-compensated setpoint shifting uses the attenuated outside temperature rather than the current outside temperature

The minimum and maximum setpoints can be set using the lower setpoint limit **SPL** and the upper setpoint limit **SPH** of the menù **Crtr**.

The system also prevents the lower working range limit **oLLo** and upper working range limit **oLHi** from exceeding/dropping below the system temperature limits.

The heating curve describes the relationship between the boiler temperature setpoint and the outside temperature. It is defined by 2 curve points. For 2 outside temperatures, the user defines the boiler temperature setpoint that is required in each case. The heating curve for the weather-compensated setpoint is calculated on this basis. The effective boiler temperature setpoint is limited by the upper setpoint limit **SPH** and the lower setpoint limit **SPL**.

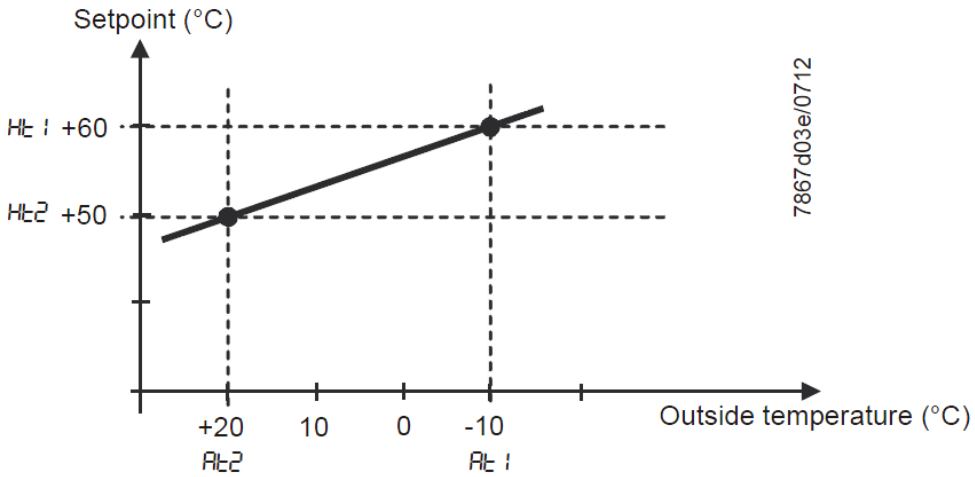

For setting climatic regulation function set:

PArA > parameters**At1, Ht1, At2, Ht2**

ConF > InP > InP3 parameters**SEn3, FnC3 = 1** (Weather-compensated setpoint).

Modbus interface

The tables that follow in this chapter specify the addresses of the readable and writable words that the customer is able to access. The customer may read and/or write the values using SCADA programs, PLCs, or similar.

The entries under Access have the following meanings:

R/O Read Only, value can only be read

R/W Read/Write, value can be read and written

The number of characters specified under Data type in the case of character strings includes the final \0.

Char10 means that the text is up to 9 characters long. The final \0 character is then added to this

User level

Address	**Access**	**Data type**	Signal reference	Parameter
0x0000	R/O	Float	X1	Analog input InP1
0x0002	R/O	Float	X2	Analog input InP2
0x0004	R/O	Float	X3	Analog input InP2
0x0006	R/O	Float	WR	Actual setpoint
0x0008	R/W	Float	SP1	Setpoint 1
0x000A	R/W	Float	SP2 (= dSP)	Setpoint 2
0x1035	R/O	Float	---	Analog input InP3 (unfiltered)
0x1043	R/O	Float	---	Actual angular positioning
0x1058	R/O	Word	B1	Burner alarm

Parameter level

Address	**Access**	**Data type**	Signal reference	Parameter
0x3000	R/W	Float	Pb1	Proportional range 1
0x3004	R/W	Float	dt	Derivative action time
0x3006	R/W	Float	rt	Integral action time
0x300C	R/W	Float	db	Dead band
0x3012	R/W	Word	tt	Controlling element running time
0x3016	R/W	Float	HYS1	Switch-on threshold
0x3018	R/W	Float	HYS2	Switch-off threshold down
0x301A	R/W	Float	HYS3	Switch-off threshold up
0x301C	R/W	Float	HYS4	Switch-on threshold (cooling)
0x301E	R/W	Float	HYS5	Switch-off threshold down (cooling)
0x3020	R/W	Float	HYS6	Switch-off threshold up (cooling)
0x3022	R/W	Float	**q**	Reaction threshold
0x3080	R/W	Float	At1	Outside temperature 1
0x3082	R/W	Float	Ht2	Boiler temperature 1
0x3084	R/W	Float	At2	Outside temperature 2
0x3086	R/W	Float	Ht2	Boiler temperature 2

Configuration level

Address	Access	Data type	Signal reference	Parameter
0x3426	R/W	Float	SCL1	Start of display input 1
0x3428	R/W	Float	SCH1	End of display input 1
0x3432	R/W	Float	SCL2	Start value input 2
0x3434	R/W	Float	SCH2	End value input 2
0x3486	R/W	Float	SPL	Start of setpoint limitation
0x3488	R/W	Float	SPH	End of setpoint limitation
0x342A	R/W	Float	OFFS1	Offset input E1
0x3436	R/W	Float	OFFS2	Offset input E2
0x343A	R/W	Float	OFFS3	Offset input E3
0x1063	R/W	Word	FnCt	Ramp function
0x1065	R/W	Float	rASL	Ramp slope
0x1067	R/W	Float	toLP	Tolerance band ramp
0x1069	R/W	Float	rAL	Limit value
0x1075	R/W	Float	dtt	Remote Detection Timer
0x1077	R/W	Float	dF1	Filter constant input 1
0x1079	R/W	Float	dF2	Filter constant input 2
0x107B	R/W	Float	dF3	Filter constant input 3
0x107D	R/O	Float	oLLo	Lower working range limit
0x107F	R/O	Float	oLHi	Upper working range limit
0x106D	R/W	Word	FnCt	Alarm relay function
0x106F	R/W	Float	AL	Alarm relay limit value (limit value alarm)
0x1071	R/W	Float	HYSt	Alarm relay hysteresis

Remote operation

Address	Access	Data type	Signal reference	Parameter
0x0500	R/W	Word	REM	Activation remote operation *
0x0501	R/W	Word	rOFF	Controller OFF in remote setpoint **
0x0502	R/W	Float	rHYS1	Switch-on threshold remote
0x0504	R/W	Float	rHYS2	Switch-off threshold down remote
0x0506	R/W	Float	rHYS3	Switch-off threshold up remote
0x0508	R/W	Float	SPr	Setpoint remote
0x050A	R/W	Word	RK1	Burner release remote operation
0x050B	R/W	Word	RK2	Relay K2 remote operation
0x050C	R/W	Word	RK3	Relay K3 remote operation
0x050D	R/W	Word	RK6	Relay K6 remote operation
0x050E	R/W	Word	rStEP	Step-by-step control remote operation
0x050F	R/W	Float	rY	Angular positioning output remote operation
0x0511	R/W	Float	rHYS4	Switch-on threshold remote (cooling)
0x0513	R/W	Float	rHYS5	Switch-off threshold down remote (cooling)
0x0515	R/W	Float	rHYS6	Switch-off threshold up remote (cooling)

Legend
* = Local
** = Controller OFF

Dati dell'apparecchio

Address	Access	Data type	Signal reference	Parameter
0x8000	R/O	Char12	---	Software version
0x8006	R/O	Char14	---	VdN number

Stato dell'apparecchio

Address	Access	Data type	Signal reference	Parameter
0x0200	R/O	Word	---	Outputs and states
			Bit 0	Output 1
			Bit 1	Output 3
			Bit 2	Output 2
			Bit 3	Output 4
			Bit 8	Hysteresis limitation
			Bit 9	Control system
			Bit 10	Self-optimization
			Bit 11	Second setpoint
			Bit 12	Measuring range overshoot InP1
			Bit 13	Measuring range overshoot InP2
			Bit 14	Measuring range overshoot InP3
			Bit 15	Calibration mode
0x0201	R/O	Word	---	Binary signals and hardware detection
			Bit 0	Operation mode 2-stage
			Bit 1	Manual mode
			Bit 2	Binary input D1
			Bit 3	Binary input D2
			Bit 4	Thermostat function
			Bit 5	First controller output
			Bit 6	Second controller output
			Bit 7	Alarm relay
			Bit 13	Analog output available
			Bit 14	Interface available

Electric connections :

With 7 pins connector version

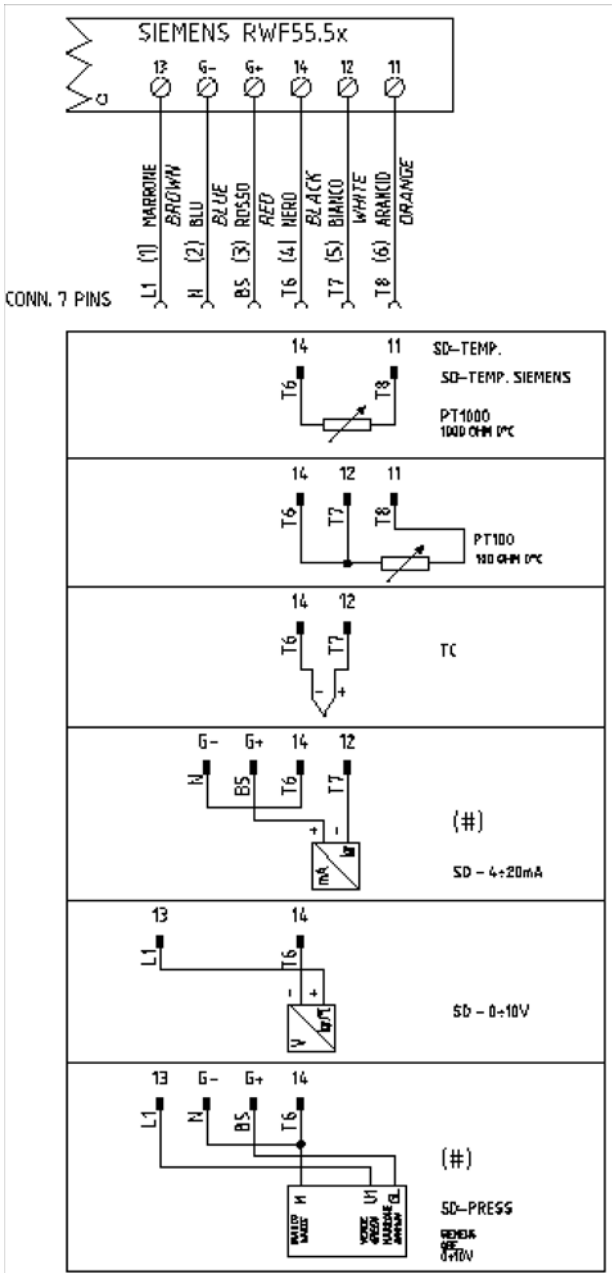

With terminals version

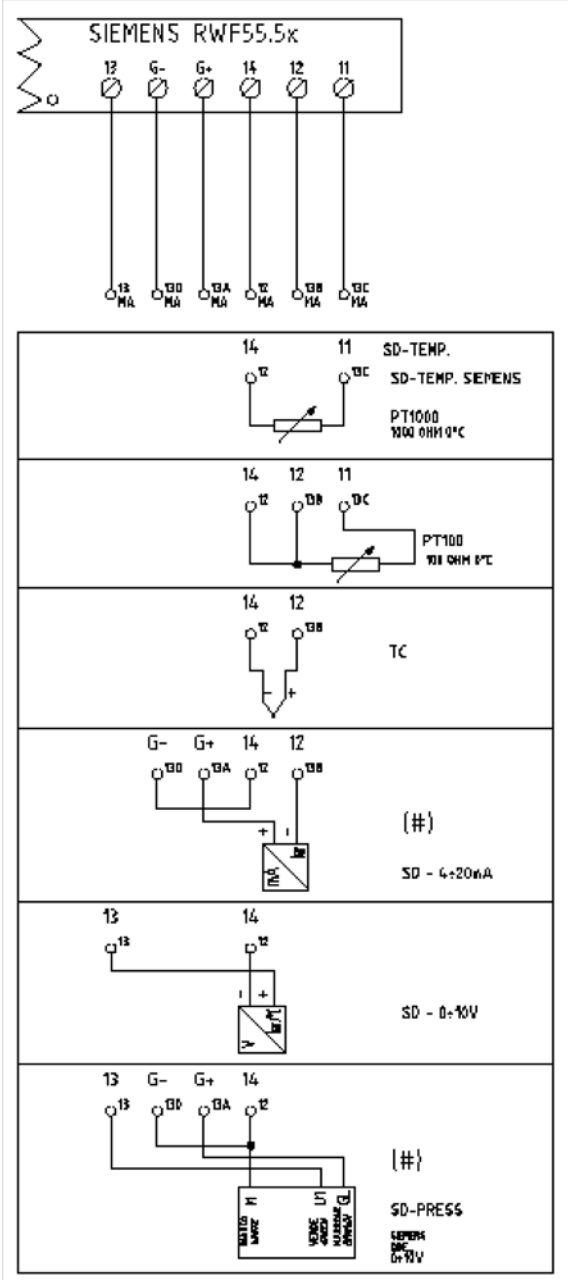

Corrispondences bornes entre RWF55.5x y RWF40.0x0Matches terminals betweenRWF55.5x and RWF40.0x0

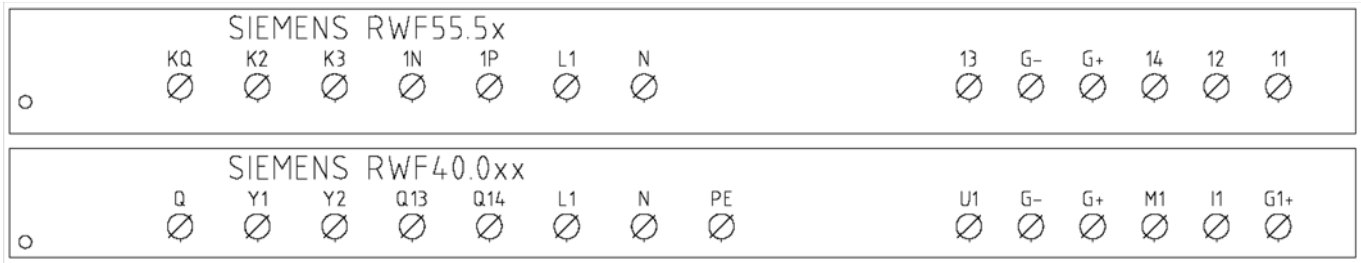

Parameters summarising for RWF55.xx :

Navigation menù	ConF					ConF									
	Inp														
	Inp1					Cntr		diSP	PArA						Opr
Types of probe	SEn1	OFF1	SCL	SCH	Unit	SPL	SPH	dECP	Pb. 1	dt	rt	tt	HYS1 (*)	HYS3 (*)	SP1 (*)
Siemens QAE2120…	6	0	needless	needless	1	30	95	1	10	80	350	(#)	-5	5	80 °C
Siemens QAM2120..	6	0	needless	needless	1	0	80	1	10	80	350	(#)	-2,5	2,5	40°C
Pt1000 (130°C max.)	4	0	needless	needless	1	30	95	1	10	80	350	(#)	-5	5	80°C
Pt1000 (350°C max.)	4	0	needless	needless	1	0	350	1	10	80	350	(#)	-5	10	80°C
Pt100 (130°C max.)	1	0	needless	needless	1	0	95	1	10	80	350	(#)	-5	5	80°C
Pt100 (350°C max)	1	0	needless	needless	1	0	350	1	10	80	350	(#)	-5	10	80°C
Probe4÷20mA / 0÷1,6bar	16	0	0	160	needless	0	160	0	5	20	80	(#)	0	20	100 kPa
Probe4÷20mA / 0÷3bar	16	0	0	300	needless	0	300	0	5	20	80	(#)	0	20	200 kPa
Probe 4÷20mA / 0÷10bar	16	0	0	1000	needless	0	1000	0	5	20	80	(#)	0	50	600 kPa
Probe 4÷20mA / 0÷16bar	16	0	0	1600	needless	0	1600	0	5	20	80	(#)	0	80	600 kPa
Probe 4÷20mA / 0÷25bar	16	0	0	2500	needless	0	2500	0	5	20	80	(#)	0	125	600 kPa
Probe 4÷20mA / 0÷40bar	16	0	0	4000	needless	0	4000	0	5	20	80	(#)	0	200	600 kPa
Probe 4÷20mA / 0÷60PSI	16	0	0	600	needless	0	600	0	5	20	80	(#)	0	30	300 (30PSI)
Probe4÷20mA / 0÷200PSI	16	0	0	2000	needless	0	2000	0	5	20	80	(#)	0	75	600 (60PSI)
Probe4÷20mA / 0÷300PSI	16	0	0	3000	needless	0	3000	0	5	20	80	(#)	0	120	600 (60PSI)
Siemens QBE2002 P4	17	0	0	400	needless	0	400	0	5	20	80	(#)	0	20	200 kPa
Siemens QBE2002 P10	17	0	0	1000	needless	0	1000	0	5	20	80	(#)	0	50	600 kPa
Siemens QBE2002 P16	17	0	0	1600	needless	0	1600	0	5	20	80	(#)	0	80	600 kPa
Siemens QBE2002 P25	17	0	0	2500	needless	0	2500	0	5	20	80	(#)	0	125	600 kPa
Siemens QBE2002 P40	17	0	0	4000	needless	0	4000	0	5	20	80	(#)	0	200	600 kPa
Signal 0÷10V	17	0	needless	needless	needless	needless	needless	needless	5	20	80	(#)			
Signal 4÷20mA	16	0	needless	needless	needless	needless	needless	needless	5	20	80	(#)			

NOTE:
(#) tt – servo control run time
SQL33 ; STM30; SQM10; SQM40; SQM50; SQM54 = 30 (secondi) - STA12B3.41; SQN30.251; SQN72.4A4A20 = 12 (secondi)
(*)These values are factory set - values must be set during operation at the plant based on the real working temperature/pressure value.

WARNING :
With pressure probes in bar the parameters SP1, SCH, SCL, HYS1, HYS3 must be set and displayed in kPa (kilo Pascal); 1bar = 100,000Pa = 100kPa.
With pressure probes in PSI the parameters SP1, SCH, SCL, HYS1, HYS3 must be set and displayed in PSI x10 (example: 150PSI > I display 1500).

APPENDIX: PROBES CONNECTION

To assure the utmost comfort, the control system needs reliable information, which can be obtained provided the sensors have been installed correctly. Sensors measure and transmit all variations encountered at their location.

Measurement is taken based on design features (time constant) and according to specific operating conditions.With wiring run in raceways, the sheath (or pipe) containing the wires must be plugged at the sensor's terminal board so that currents of air cannot affect the sensor's measurements.

Ambient probes (or ambient thermostats)

Installation

The sensors (or room thermostats) must be located in reference rooms in a position where they can take real temperature measurements without being affected by foreign factors.

It's good to be admired …even better to be effective

Heating systems: the room sensor must not be installed in rooms with heating units complete with thermostatic valves. Avoid all sources of heat foreign to the system.

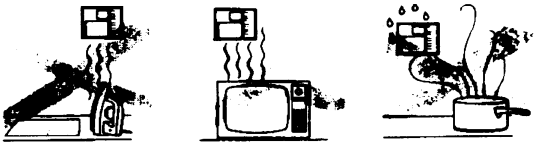

Location

On an inner wall on the other side of the room to heating unitsheight above floor 1.5 m, at least 1.5 m away from external sources of heat (or cold).

.

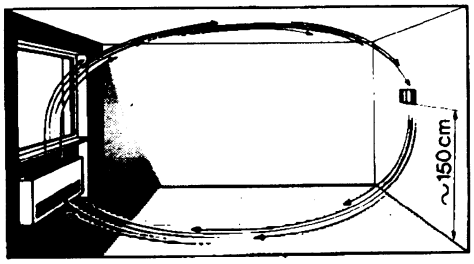

Installation position to be avoided

near shelving or alcoves and recesses, near doors or win-dows, inside outer walls exposed to solar radiation or currents of cold air, on inner walls with heating system pipes, domestic hot water pipes, or cooling system pipes running through them.

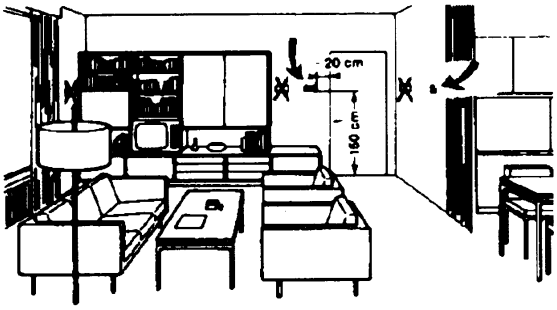

Outside probes (weather)Installation

In heating or air-conditioning systems featuring adjustment in response to outside temperature, the sensor's positioning is of paramount importance.

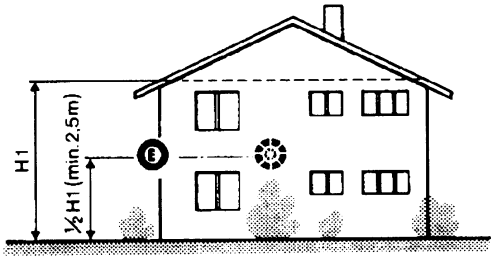

General rule: en on the outer wall of the building where the living rooms are, never on the south-facing wall or in a position where they will be affected by morning sun. If in any doubt, place them on the north or north-east façade.

Positions to be avoidedH

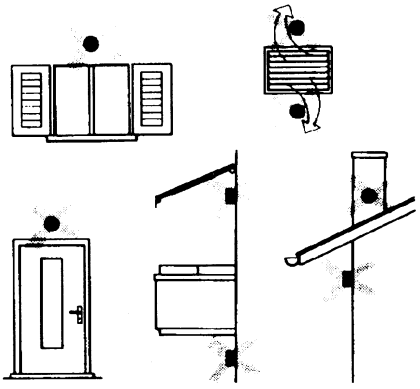

Avoid installing near windows, vents, outside the boiler room, on chimney breasts or where they are protected by balconies, cantilever roofs .

The sensor must not be painted (measurement error) .

Duct or pipe sensors

Installing temperature sensors

For measuring outlet air:

"after delivery fan or

"after coil to be controlled, at a distance of at least 0,5 m

For measuring room temperature:

"before return air intake fan and near room's return airintake.

For measuring saturation temperature: after mist eliminator.

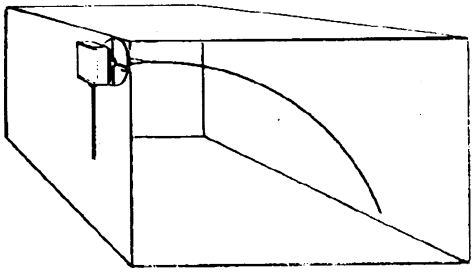

Bend 0.4m sensor by hand (never use tools) as illustrated .

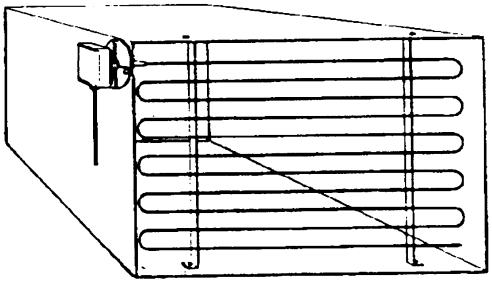

Use whole cross-section of duct, min. distance from walls 50 mm, radius of curvature 10 mm for 2m or 6m sensors

Installing combined humidity sensors

As max. humidity limit sensor on outlet (steam humidifiers) .

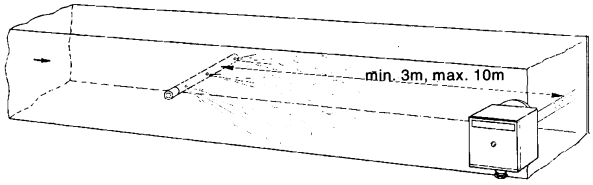

Installing pressure sensors

A - installation on ducts carrying fluids at max. temperature 80°C

B - installation on ducts at temperature over 80°C and for refrigerants

C - installation on ducts at high temperatures :

·"increase length of siphon

"place sensor at side to prevent it being hit by hot air coming from the pipe.

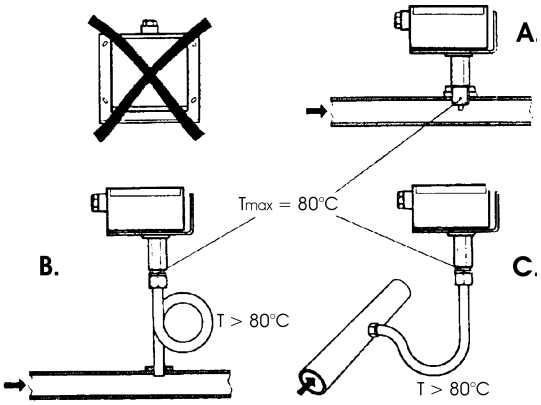

Installing differential pressure sensors for water

Installation with casing facing down not allowed.

With temperature over 80°C, siphons are needed.

To avoid damaging the sensor, you must comply with the following instructions :

when installing: make sure pressure difference is not greater than the value permitted by the sensor

when there are high static pressures, make sure you insert shutoff valves A-B-C.

Putting into operation

Start disable

1=open C1=open C

2=open A2=close B

3=open B3=close A

4= close C

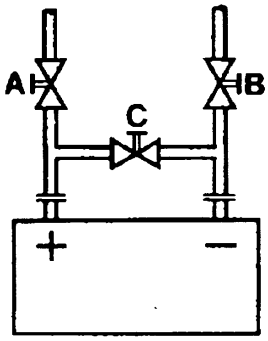

Immersion or strap-on sensors

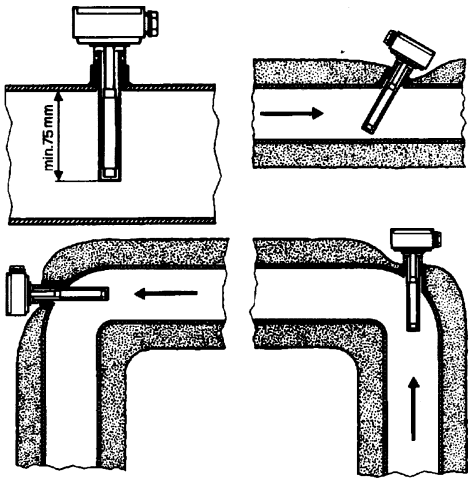

Immersion probes installation

Sensors must be installed on the stretch of pipe in which fluid circulates all the time.

The rigid stem (sensing element doing the measuring) must be inserted by at least 75mm and must face the direction of flow.

Recommended locations: on a bend or on a straight stretch of pipe but tilted by 45° and against the flow of fluid.

Protect them to prevent water from infiltrating (dripping gates, condensation from pipes etc.) .

Installing QAD2.. strap-on sensors

Make sure fluid is circulating in the chosen location.

Eliminate insulation and paintwork (including rust inhibitor) on a min. 100mm length of pipe.

Sensors come with straps for pipes up to 100 mm in diameter .

Placing the probes (QAD22.../QAE21.../QAP21.../RCA...)

With pumps on outlet

with 3 ways valves / with 4 ways valves

Panel system / burner control

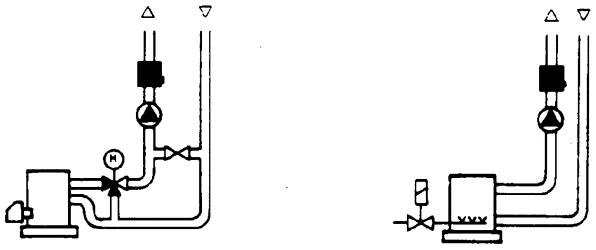

With pumps on return

with 3 ways valves / with 4 ways valves

Strap-on or immersion sensors?

QAD2.. strap-on sensors

Advantages :

- 10 sec. time constant
- Installed with system running (no plumbing work)
- Installation can be changed easily if it proves incorrect

ΠLimits:

- Suitable for pipe diameters max. 100 mm
- Can be affected by currents of air etc.

QAE2... immersion sensors

Advantages:

- Measure "mean" fluid temperature
- No external influence on measurement such as: currents of air, nearby pipes etc.

Limits:

- Time constant with sheath: 20 sec.
- Hard to change installation position if it proves incorrect

Installing differential pressure probes for air

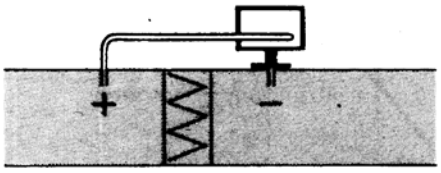

A - Control a filter (clogging)

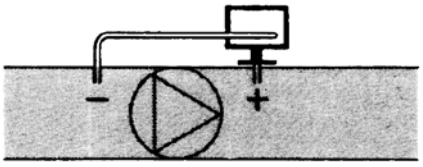

B - Control a fan (upstream/downstream)

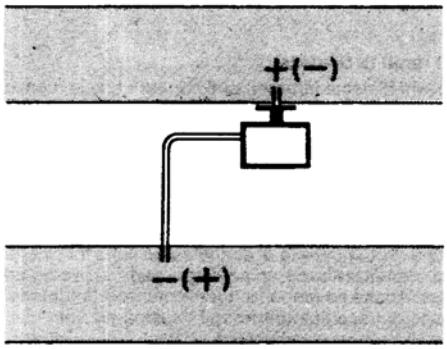

C - Measurement of difference in pressure between two ducts

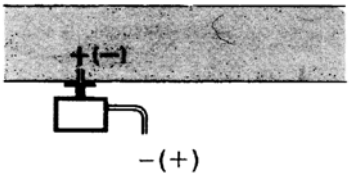

D - Measurement of difference in pressure between two rooms or of inside of duct and outside

Basic principles

Measuring static pressure(i.e. pressure exerted by air on pipe walls)

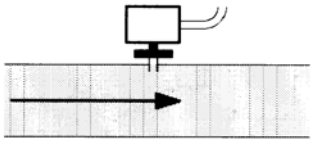

Measuring dinamic pressure

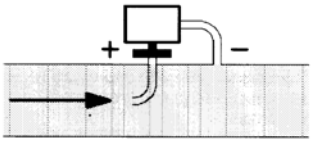

$$Pd = \frac{y\,\vartheta^2}{2g}$$

Legend

y	Kg/m3, specific weight of air
q	m/s, air speed
g	9.81 m/s2 gravity acceleration
Pd	mm C.A., dynamic pressure

Measuring total pressure

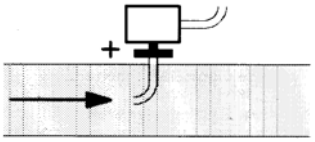

Note: Specifications and data subject to change. Errors and omissions excepted.

MANUALE USER SUPPORT

MULTI-THERMOSTAT

MCX06C

MCX06C is a multi-thermostat with four 100k NTC inputs. It can control up to 4 temperatures showing them (not more than 2 at the same time) on a couple of displays.
It is used to check and adjust oil heater temperatures. it works as follows:
as soon as the burner control gives the GO to the digital 1 input (terminals DI1-COM), the adjustment program runs (the relevant LED is ON). Reading the outlet temperature through the probe **Pb3** (terminals AI3-COM), a PID signal is produced. This signal becomes the set-point for the electric resistors. The electric resistors temperature is read through the probe **Pb1** (terminals AI1-COM) so that a second PID signal is produced. This second PID drives a couple of SCR by means of 0-10 V impulses in order to control the electric resistors temperature.
When the burner is in stand-by, resistor set-point is kept at the temperature set in parameter "**p30**" (see parameter group **REG**).
Probe **Pb4** (terminals AI4-COM) controls the inner heater temperature. As soon the relevant set-point is got, it drives the output number 4 (terminals C4-NO4) linked to the relais KTCN. This allows the oil pump to start and also the burner control proceeds with its cycle.
When set-point **trS** is got to, output number 5 is ON (terminals C5-NO5) linked to the relais KTRS. It switches the resistors off and activates an alarm on the device.
Probe **Pb2** (terminals AI2-COM), when fitted, drives output number 2 (terminals C2-NO2) linked to the relais KTCI. This allows the burner control to proceed with ignition.
See below the set-point recommended figures.

User interface:

Device:

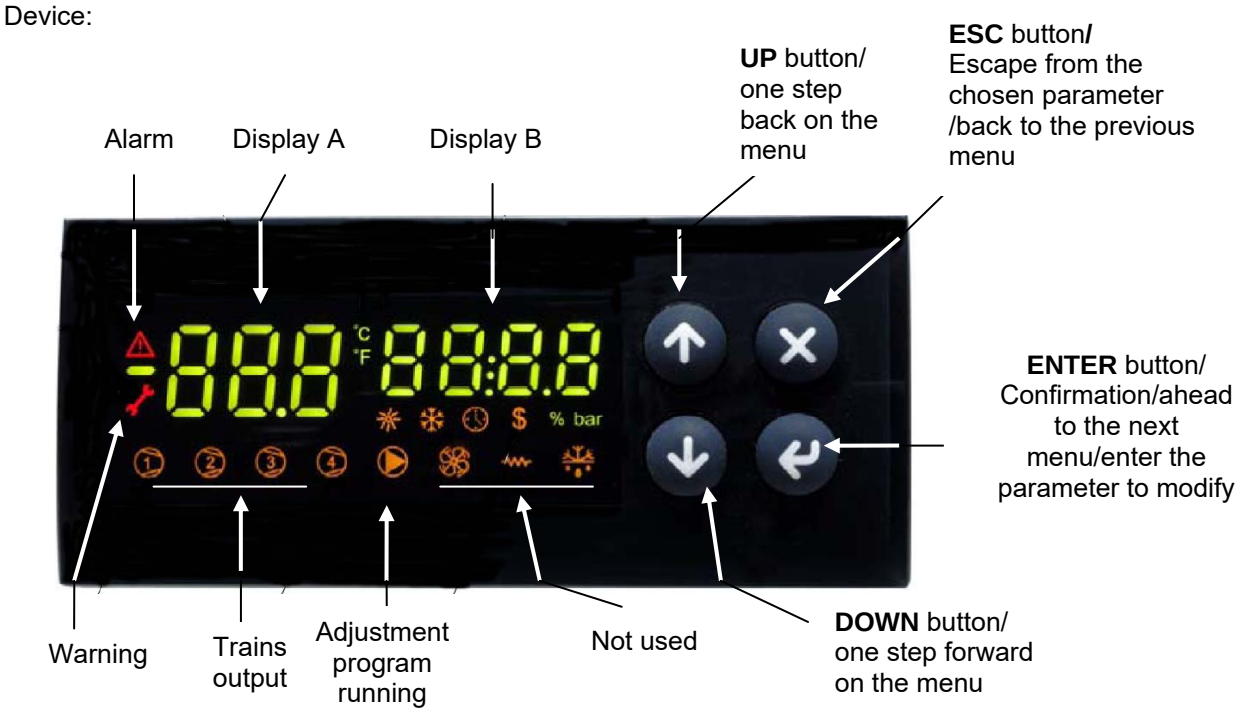

Note :
In normal operation, the display A shows the oil tank resistor temperature (probe Pb1).
In normal operation, the display B shows the oil output temperature (probe Pb3).

Connections from terminal side :

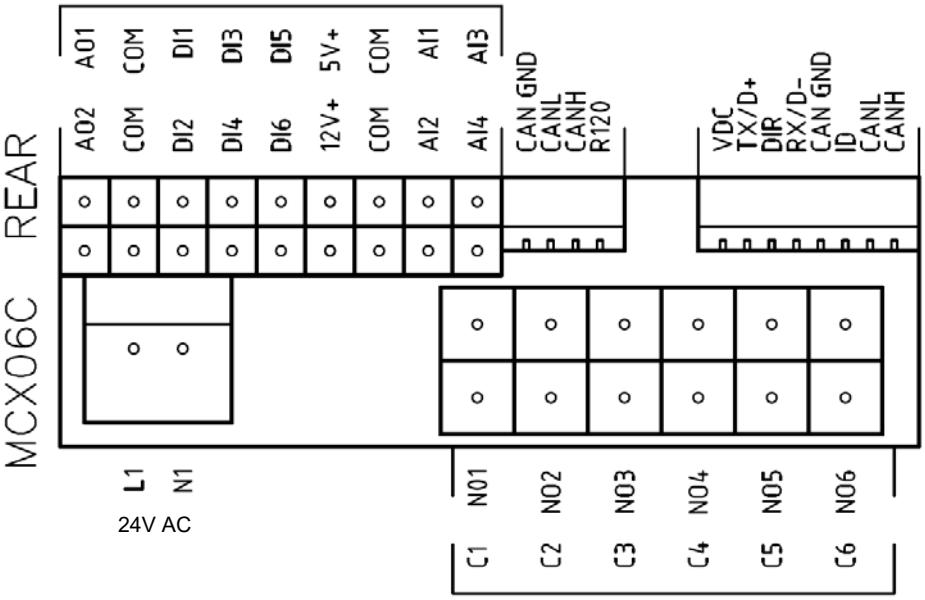

Probe connection:

input **AI1** = probe **Pb1** = set-point "**tr**" = oil heater temperature probe;
input **AI2** = probe **Pb2** = set-point "**tCI**" = plant consent temperature probe (when installed);
input **AI3** = probe **Pb3** = set-point "**OIL**" = oil heater output temperature probe (PID regulation);
input **AI4** = probe **Pb4** = set-point "**tcn**" = oil heater consent temperature probe.

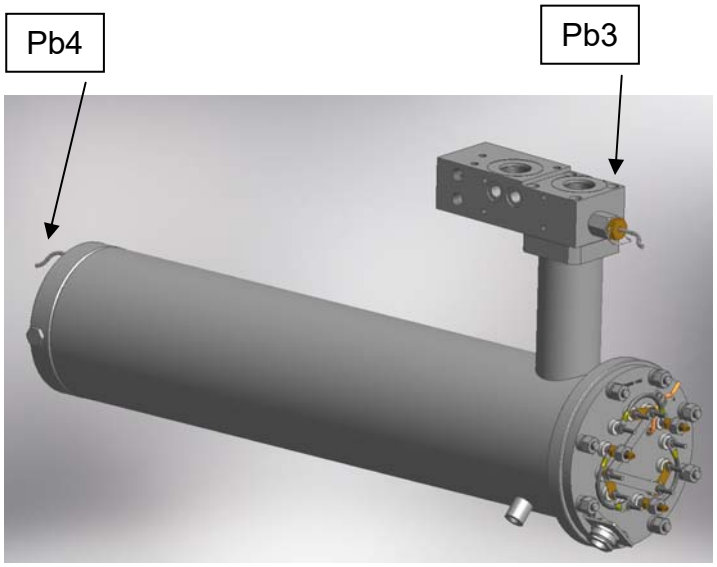

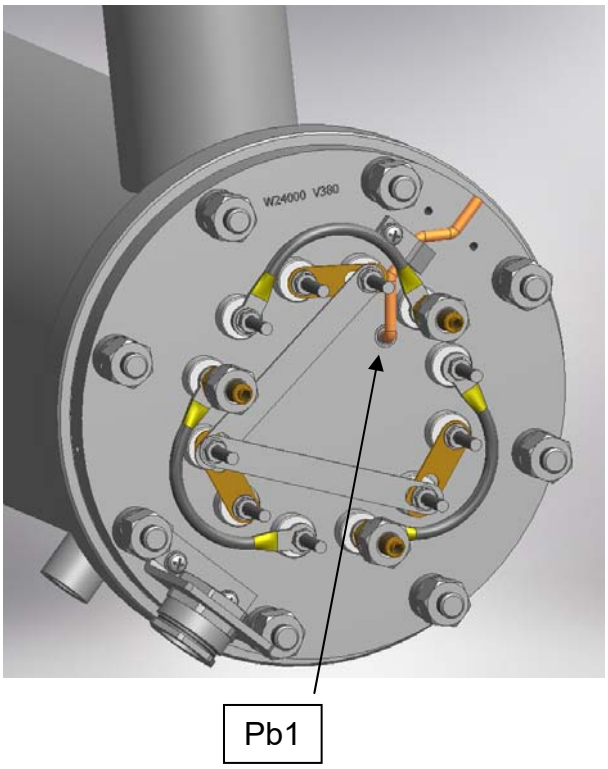

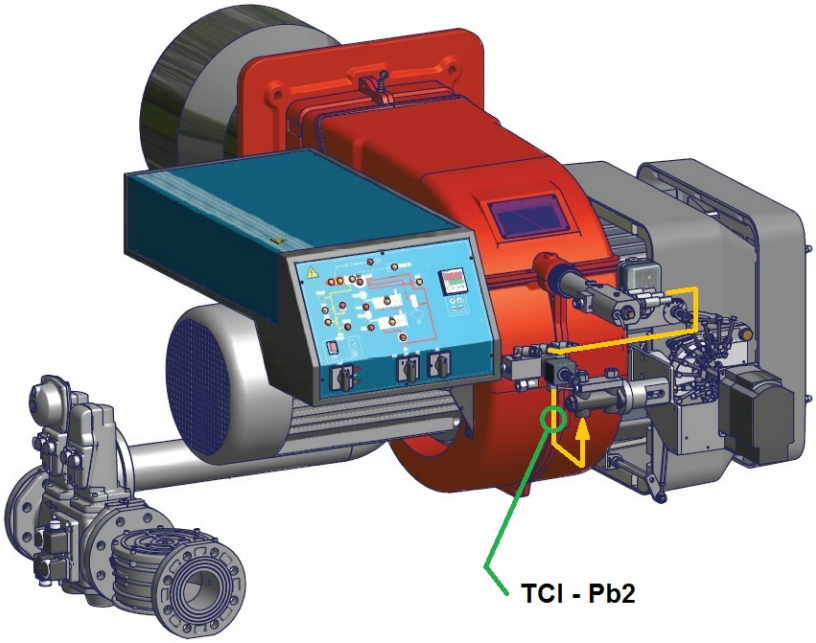

(**tCI - Pb2** probe only for mechanical atomizing burners)

Menu :
To enter the menu below, keep pushing **ENTER** for more than 3 s.

Menu code	Sub-menu code	Function	Notes
Prb		Probes values	You can see in sequence the 4 probe values (UP and DOWN keys): the probe code is on display A (Pb1,..., Pb4) and the probe value is on display B (not fitted or out of work probes show "----").
Log		Login	It defines the access level to menu and parameters (password)
	PAS	Password	Password input
Par		Parameters menu	Access to parameters (you have to login first)
	CnF	Configuration menu	Parameter configuration
	rEG	Regulation menu	Set to set-point, probe, thresholds etc.
ALA		Alarm menu	Access to alarm management
	Act	Active alarms	Show the active alarms
	rES	Reset alarms	Reset of the manual reset alarms
Loc		Lock/Unlock functions	Not used
InF	rEL	Software version	Installed software version
tUN		Autotuning	Activation On, deactivation ESC PID parameter autotuning

Login:
All the parameters inside the **Par** menu are locked by a password.
Without password, only set-points can be modified.
To login, on the log menu, press **ENTER** for more than 3 s. Input your password (level 2 or 3) inside **PAS**
With password for level 3 all the data can be set.

submenu **CnF - configuration parameters group :**

Menu	Parameter	Description	Additional description	Min	Max	Default	U.M.	Visibility condition	Password level	Modbus index
CnF		**CONFIGURATION**							0	
AI1		Analog Input 1							1	
	A1P	Probe 1 Presence	This parameter enables or disables the probe	0	1	1			2	1
	A1C	Calibration Probe 1	Don't modify it	-20,0	20,0	0,0	°C	A1P >0	3	2
AI2		Analog Input 2							1	
	A2P	Probe 2 Presence	This parameter enables or disables the probe	0	1	1			2	3
	A2C	Calibration Probe 2	Don't modify it	-20,0	20,0	0,0	°C	A2P >0	3	4
AI3		Analog Input 3							1	
	A3P	Probe 3 Presence	This parameter enables or disables the probe	0	4	1			2	5
	A3L	Min. Value conversion AI3	Don't modify it	-999,9	999,9	0,0		A3P >2	3	6
	A3H	Max. Value conversion AI3	Don't modify it	-999,9	999,9	30,0		A3P >2	3	7
	A3C	Calibration Probe 3	Don't modify it	-20,0	20,0	0,0	°C	A3P >0	3	8
AI4		Analog Input 4							1	
	A4P	Probe 4 Presence	This parameter enables or disables the probe	0	4	1			2	9
	A4L	Min. Value conversion AI4	Don't modify it	-999,9	999,9	0,0		A4P >2	3	10
	A4H	Max. Value conversion AI4	Don't modify it	-999,9	999,9	30,0		A4P >2	3	11
	A4C	Calibration Probe 4	Don't modify it	-20,0	20,0	0,0	°C	A4P >0	3	12
dI		Digital input							1	
	dI1	Input 1 polarity (Pump)	Change type of digital input (NC o NO)	0	1	1			3	13
	dI2	Alarm polarity from input 2	Change type of digital input (NC o NO)	0	2	2			2	14
	dI3	Alarm polarity from input 3	Change type of digital input (NC o NO)	0	2	2			2	15
	dI4	Alarm polarity from input 4	Change type of digital input (NC o NO)	0	2	2			2	16
	dI5	Alarm polarity from input 5	Change type of digital input (NC o NO)	0	2	2			2	17
	dI6	Alarm polarity from input 6	Change type of digital input (NC o NO)	0	2	2			2	18
dI		Digital output Alarm and Warning							1	
	dO5	Polarity output Warning	Change type of digital input (NC o NO)	0	1	0			3	19
	dO6	Polarity output Alarm	Change type of digital input (NC o NO)	0	1	0			3	20
SIC		Safety probe							1	
	SIp	Selection of safety probe	Probe which also activates the relay Warning (ns. KTRS)	0	4	4			3	21
SyS		Syistem							0	
	dSA	display A output	Probe temperature or set-point to be displayed in the left display	0	8	1			3	22
	dSb	display B output	Probe temperature or set-point to be displayed in the right display	0	8	3			3	23
PAS		Password							1	
	PL1	Password level 1		0	9999	0			1	32
	PL2	Password level 2		0	9999				2	33
	PL3	Password level 3		0	9999				3	34

Menu	Parameter	Description	Additional description	Min	Max	Default	U.M.	Visibility condition	Level	Modbus index
tUN		Autotuning							3	
	tU1	Output temperature hysteresis	Don't modify it	0	50,0	0,5	°C		3	35
	tU2	Startup number	Don't modify it	0	5	2			3	36
	tU3	Measurement cycles number	Don't modify it	1	4	2			3	37
	tU4	Max. differential command exit	Don't modify it	0,01	10,00	10,00	V		3	38
	tU5	Differential reduction exit command (%)	Don't modify it	0	100	15			3	39
	tU6	Calculating mode: 0= Symmetrical; 1=Asymmetrical; 2=Simple	Don't modify it	0	2	2			3	40
	tU7	Enabling	Don't modify it	0	1	1			3	41

Submenu **REG – regulation parameters group :**

Menu	Parameter	Description	Additional description	Min	Max	Default	U.M.	Visibility condition	Level	Modbus index
REG		**REGULATION**							0	
Pb1		Probe 1							0	
	rES	Set-point Probe 1 (Tank resistor)	Don't modify it	-50,0	200,0	0,0	°C		3	42
	AL1	Probe 1 - Low Temperature Alarm Threshold	Don't modify it	-50,0	200,0	-50,0	°C		3	43
	AH1	Probe 1 - High Temperature Alarm Threshold	Don't modify it	-50,0	200,0	200,0	°C		3	44
	d01	Probe 1 differential		0,0	20,0	3,0	°C		3	45
Pb2		Probe 2							0	
	tCI	Set-point Probe 2 (Plant Consent)	Plant consent according to table "**Set point adjustment**"	-50,0	200,0	120,0	°C		0	46
	AL2	Probe 2 - Low Temperature Alarm Threshold	Don't modify it	-50,0	200,0	-50,0	°C		2	47
	AH2	Probe 2 - High Temperature Alarm Threshold	Don't modify it	-50,0	200,0	200,0	°C		2	48
	d02	Probe 2 differential		0,0	20,0	3,0	°C		2	49
Pb3		Probe 3							0	
	rE3	Type of regulation of probe 3 (Oil tank exit)	Type of regulation 0= thermostat; 1= PID (don't modify)	0	1	1			3	50
	OIL	Set-point Probe 3 (Oil tank exit)	Nozzle oil temperature according to the table "**Set point adjustment**"	-50,0	200,0	130,0	°C		0	51
	AL3	Probe 3 - Low Temperature Alarm Threshold (Oil tank exit)	Don't modify it	-50,0	200,0	-50,0	°C		2	52
	AH3	Probe 3 - High Temperature Alarm Threshold (Oil tank exit)	Don't modify it	-50,0	200,0	200,0	°C		2	53
	Pb3	Proportional band for PID Probe 3 (Oil tank exit)	Proportional band for first PID regulation	0,0	200,0	60,0			3	54
	db3	Dead Zone for PID Probe 3 (Oil tank exit)	Dead zone for first PID regulation	0,0	20,0	0,0	°C	rE3 =1	3	55
	rt3	Integral Time (Ti) for PID Probe 3 (Oil tank exit)	Integral time for first PID regulation	0,0	1000,0	120,0	s	rE3 =1	3	56
	dt3	DerivativeTime (Td) for PID Probe 3 (Oil tank exit)	Derivative time for first PID regulation (~ ¼ di rt3)	0,0	300,0	30,0	s	rE3 =1	3	57
	db3	Dead Zone for PID Probe 3 (Oil tank exit)	Dead zone for first PID regulation	0,0	20,0	0,0	°C	rE3 =1	3	55

Menu	Parameter	Description	Additional description	Min	Max	Default	U.M.	Visibility condition	Level	Modbus index
	pi1	Overshooting for Integral action (Oil tank exit)	Don't modify it	100	1000	200		rE3 =1	3	58
	pi2	Derivative action enabling (Oil tank exit)	Don't modify it	0	1	1		rE3 =1	3	59
	pi3	Filtering factor for derivative action (Oil tank exit)	Don't modify it	1	100	20		rE3 =1	3	60
	pi4	Duty cicle PWM for output DO3 and/or AO1 (0-10V)	Don't modify it	1	300	5	s	rE3 =1	3	61
	SL3	Output selection DO3 and/or AO1 (0-10V)	Digital selection output for control thyristors; Don't modify it	0	2	AO1			3	62
	p21	Proportional band for PID Probe 1 (Tank resistor)	Proportional band for second PID regulation	0,0	200,0	50,0		rE3 =1	3	63
	p22	Dead Zone for PID Probe 1 (Tank resistor)	Dead zone for second PID regulation	0,0	20,0	0,0	°C	rE3 =1	3	64
	p23	Integral Time (Ti) for PID Probe 1 (Tank resistor)	Integral time for second PID regulation	0,0	1000,0	110,0	s	rE3 =1	3	65
	p24	DerivativeTime (Td) for PID Probe 1 (Tank resistor)	Derivative time for second PID regulation	0,0	300,0	23,0	s	rE3 =1	3	66
	p25	Overshooting for Integral action (Tank resistor)	Don't modify it	100	1000	200		rE3 =1	3	67
	p26	Derivative action enabling (Tank resistor)	Don't modify it	0	1	1		rE3 =1	3	68
	p27	Filtering factor for derivative action (Tank resistor)	Don't modify it	1	100	20		rE3 =1	3	69
	p28	Min Output PID Probe 3 (Oil tank exit)	Minimum value tank resistor set-point (delta of 100°C above p29)	0,0	1000,0	80,0	°C	rE3 =1	3	70
	p29	Max Output PID Probe 3 (Oil tank exit)	Maximum valuetank resistor set-point	0,0	1000,0	180,0	°C	rE3 =1	3	71
	SP0	Set-point Tank Resistor with oil pump stops (stand by)	Set-point of maintaining resistance during stand by "**Set point adjustment**"	-50,0	200,0	140,0	°C	rE3 =1	0	72
Pb4		Probe 4							0	
	tcn	Setpoint Probe 4 (Oil consent)	Oil consent according table "**Set point adjustment**"	-50,0	200,0	110,0	°C		0	73
	AL4	Low Threshold Probe 4		-50,0	200,0	-50,0	°C		2	74
	trS	Probe 4 - High Temperature Alarm Threshold (Safety Thermostat)	Tank resistor safety temperature according table "**Set point adjustment**"	-50,0	200,0	190,0	°C		0	75
	d04	Probe 4 differential		0,0	20,0	3,0	°C		2	76

Alarms & Warning:
When the red triangle on the top left lights, one or more alarms are activated.
When the red key on the left lights, the output N05-C5 is active and the relay **KTRS** switches the resistors OFF.
Check the reason, correct the failure and, as soon as the temperature is lower than **trS**, reset it through **ALA**/**rES .**
In order to show active alarms and warnings, select the relevant menu through **ALA**/**Act**.and, using the **UP** and **DOWN** buttons, scroll the lines.
In order to perform the manual reset, select **ALA**/**rES**.

Code	Description	Sourse	Active simbol	Reset type
trS	High temperature resistors alarm	probe Pb4 > value trS	red key	Manual
EP1	Probe Pb1 fault	Probe Pb1 fault	red triangle	Automatic
EP2	Probe Pb2 fault	Probe Pb2 fault	red triangle	Automatic
EP3	Probe Pb3 fault	Probe Pb3 fault	red triangle	Automatic
EP4	Probe Pb4 fault	Probe Pb4 fault	red triangle	Automatic

Set point adjustment:

All the parameters inside the **Par** menu are locked by a password. The user can modify only set points, without using any passwords.
The oil viscosity at the nozzle, should be about 1,5°E, which guarantees correct and safe functioning of the burner.
The temperature values in the table, guarantee the respect of that parameter and are valid when the pre heating tank is installed on the burner. For different configurations , please refer to the chapter "Recommendations to design heavy oil feeding plants" on the burner manual
Here below recommended set points:

Menu path				Oil viscosity at 50 °C according to the letter shown in the burner model				
				P	**N**	**E**	**D**	**H**
				89 cSt	< 50 cSt	> 50 cSt < 110 cSt	> 110 cSt < 400 cSt	> 400 cSt < 4000 cSt
				12 °E	< 7°E	> 7 °E < 15 °E	> 15 °E < 50 °E	> 50 °E < 530 °E
Par								
rEG	Pb1	tr	Oil heater temperature probe	parameter not visible				
	Pb2	tCI	Plant consent temperature probe (when installed)	20 °C	70 °C	70 °C	70 °C	---
	Pb3	Oil	oil heater output temperature probe (PID regulation);	60-70 °C	110-120 °C	120-130 °C	130-140 °C	140-150 °C
		SP0	Set-point oil heater with oil pump stopped (stand-by)	45 °C	120 °C	130 °C	140 °C	150 °C
	Pb4	tcn	Oil heater consent temperature probe	40 °C	100 °C	100 °C	110 °C	120 °C
		trS	Safety temperature tank resistors (manual reset)	120 °C	190-200 °C	190-200 °C	190-200 °C	190-200 °C

The above temperature values are suggested and refer to a plant designed according to the prescriptions in the burner user manual.
The suggested values can change in reference to the fuel oil specifications.

USER MANUAL OF MULTI-THERMOSTAT

MCX06C

MCX06C is a multi-thermostat with four 100k NTC inputs. It can control up to 4 temperatures showing them (not more than 2 at the same time) on a couple of displays.
It is used to check and adjust oil heater temperatures.

User interface:
Device:

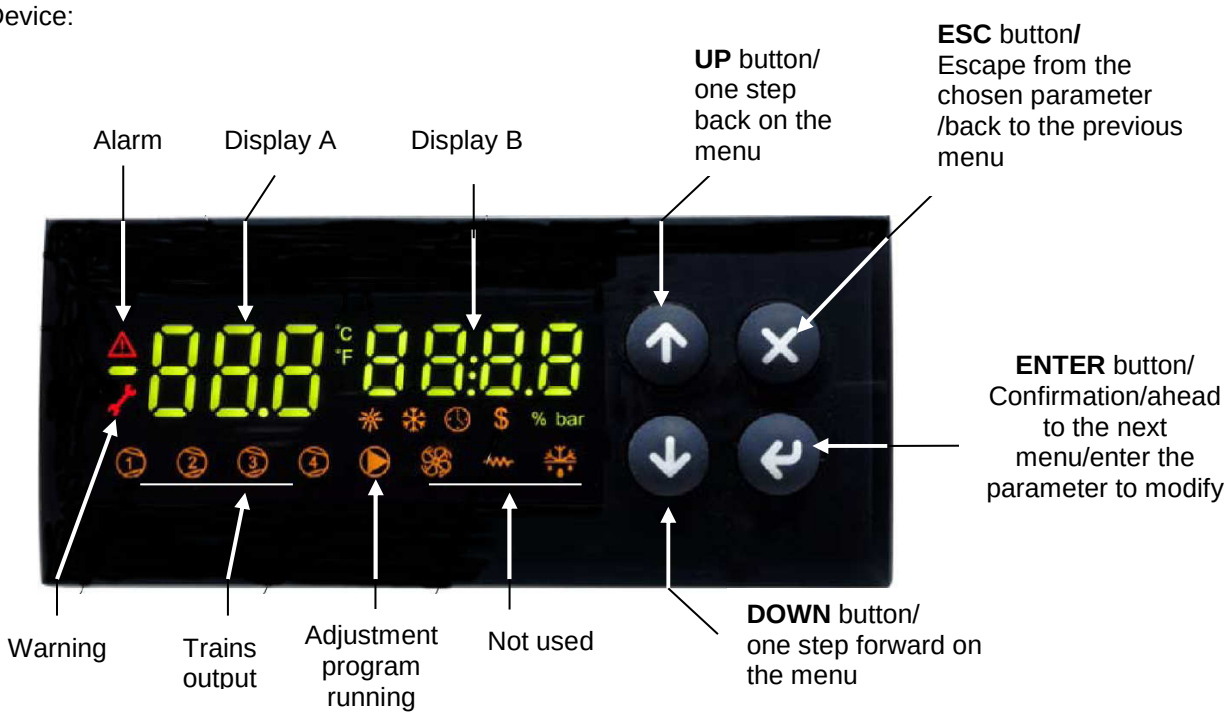

Note :
In normal operation, the display A shows the oil tank resistor temperature (probe Pb1).
In normal operation, the display B shows the oil output temperature (probe Pb3).

Connections from terminal side:

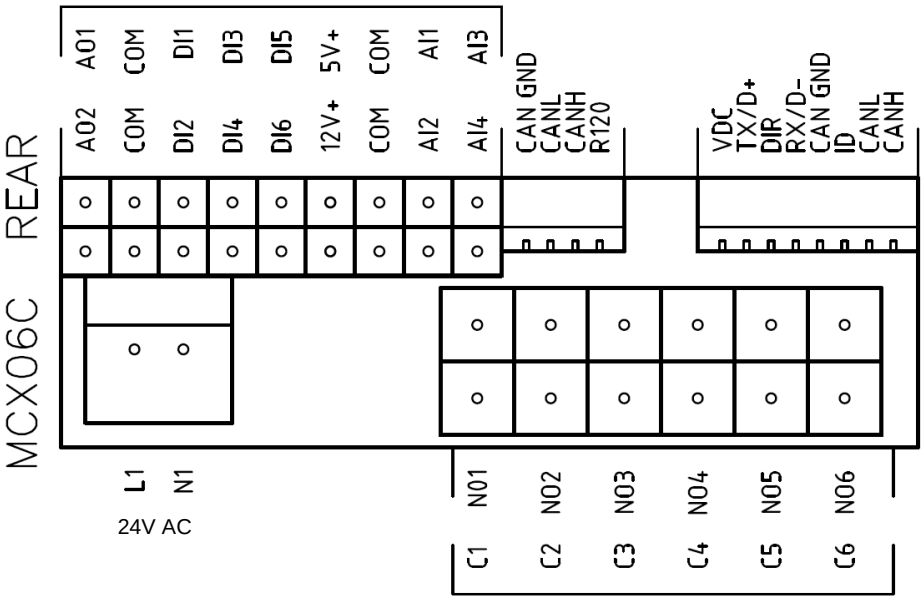

Probe connection:
input **AI1** = probe **Pb1** = set-point "**tr**" = oil heater temperature probe;
input **AI2** = probe **Pb2** = set-point "**tCI**" = plant consent temperature probe (when installed);
input **AI3** = probe **Pb3** = set-point "**OIL**" = oil heater output temperature probe (PID regulation);
input **AI4** = probe **Pb4** = set-point "**tcn**" = oil heater consent temperature probe.

Menu:
To enter the menu below, keep pushing **ENTER** for more than 3 s.

Menu code	Sub-menu code	Function	Notes
Prb		Probes values	You can see in sequence the 4 probe values (UP and DOWN keys): the probe code is on display A (Pb1,..., Pb4) and the probe value is on display B (not fitted or out of work probes show "----").
Log		Login	It defines the access level to menu and parameters (password)
	PAS	Password	Password input
Par		Parameters menu	Access to parameters (you have to login first)
	CnF	Configuration menu	Parameter configuration
	rEG	Regulation menu	Set to set-point, probe, thresholds etc.
ALA		Alarm menu	Access to alarm management
	Act	Active alarms	Show the active alarms
	rES	Reset alarms & Warning	Reset of the manual reset alarms and warning
Loc		Lock/Unlock functions	Not used
InF	rEL	Software version	Installed software version
tUN		Autotuning	Activation On, deactivation ESC PID parameter autotuning

Alarms & Warning:
When the red triangle on the top left lights, one or more alarms are activated.
When the red key on the left lights, the output N05-C5 is active and the relay **KTRS** switches the resistors OFF.
Check the reason, correct the failure and, as soon as the temperature is lower than **trS**, reset it through **ALA/rES .**
In order to show active alarms and warnings, select the relevant menu through **ALA/Act**.and, using the **UP** and **DOWN** buttons, scroll the lines.
In order to perform the manual reset, select **ALA/rES**.

Code	Description	Sourse	Active simbol	Reset type
trS	High temperature resistors alarm	probe Pb4 > value trS	red key	Manual
EP1	Probe Pb1 fault	Probe Pb1 fault	red triangle	Automatic
EP2	Probe Pb2 fault	Probe Pb2 fault	red triangle	Automatic
EP3	Probe Pb3 fault	Probe Pb3 fault	red triangle	Automatic
EP4	Probe Pb4 fault	Probe Pb4 fault	red triangle	Automatic

Set point adjustment:
All the parameters inside the **Par** menu are locked by a password.
The user can modify only set points (menu **rEG**), without using any passwords.
The oil viscosity at the nozzle, should be about 1,5°E, which guarantees correct and safe functioning of the burner.
The temperature values in the table, guarantee the respect of that parameter and are valid when the pre heating tank is installed on the burner. For different configurations , please refer to the chapter "Recommendations to design heavy oil feeding plants" in the burner manual.
Here below recommended set points:

Menu path				Oil viscosity at 50 °C according to the letter show n in the burner model				
				P	**N**	**E**	**D**	**H**
				89 cSt	< 50 cSt	> 50 cSt < 110 cSt	> 110 cSt < 400 cSt	> 400 cSt < 4000 cSt
				12 °E	< 7°E	> 7 °E < 15 °E	> 15 °E < 50 °E	> 50 °E < 530 °E
Par								
rEG	Pb1	tr	Oil heater temperature probe	parameter not visible				
	Pb2	tCI	Plant consent temperature probe (when installed)	20 °C	70 °C	70 °C	70 °C	---
	Pb3	Oil	oil heater output temperature probe (PID regulation);	60-70 °C	110-120 °C	120-130 °C	130-140 °C	140-150 ° C
		SP0	Set-point oil heater with oil pump stopped (stand-by)	45 °C	120 °C	130 °C	140 °C	150 °C
	Pb4	tcn	Oil heater consent temperature probe	40 °C	100 °C	100 °C	110 °C	120 °C
		trS	Safety temperature tank resistors (manual reset)	120 °C	190-200 °C	190-200 °C	190-200 °C	190-200 °C

The above temperature values are suggested and refer to a plant designed according to the prescriptions in the burner user manual. The suggested values can change in reference to the fuel oil specifications.

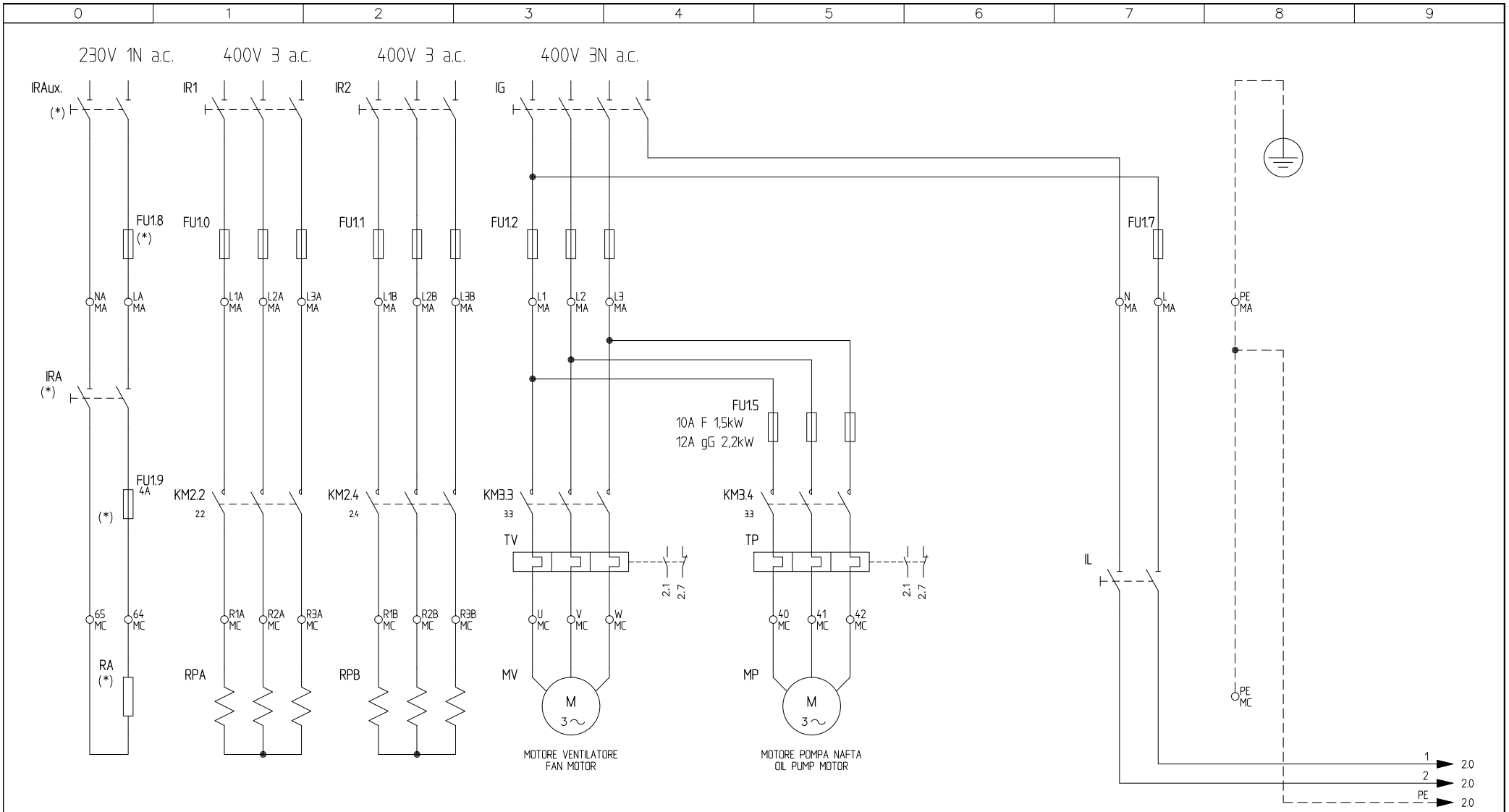

(*)
UTILIZZATO SOLO PER VERSIONI "NAFTA ECOLOGICA" E "NAFTA DENSA"
USED FOR "ECODEN" AND "HEAVY OIL" VERSIONS ONLY

REV.	MODIFICA	DATA	FIRME
03	AGGIUNTO/ADDED SQM40.265A	15/12/09	U. PINTON
02	AGGIUNTO TIPI/TYPES ADDED PN515 + RN515	23/07/08	U. PINTON
01	AGGIUNTO STM30 E CONTATTI PULITI	20/12/06	U. PINTON

UNIGAS

Impianto
TIPI/TYPES PN515 – 520 / RN515 – 520
MODELLO/MODEL x–.PR.S.xx.A

Descrizione
CON MOTORE POMPA
WITH PUMP MOTOR

Ordine

Commessa

Esecutore: U. PINTON

Data Controllato: 15/12/2009

Controllato: S. MARCHETTI

Data: 27/07/2005

Revisione: 03

Dis. N. 11 – 337

PREC.: /

FOGLIO: 1

SEGUE: 2

TOTALE: 7

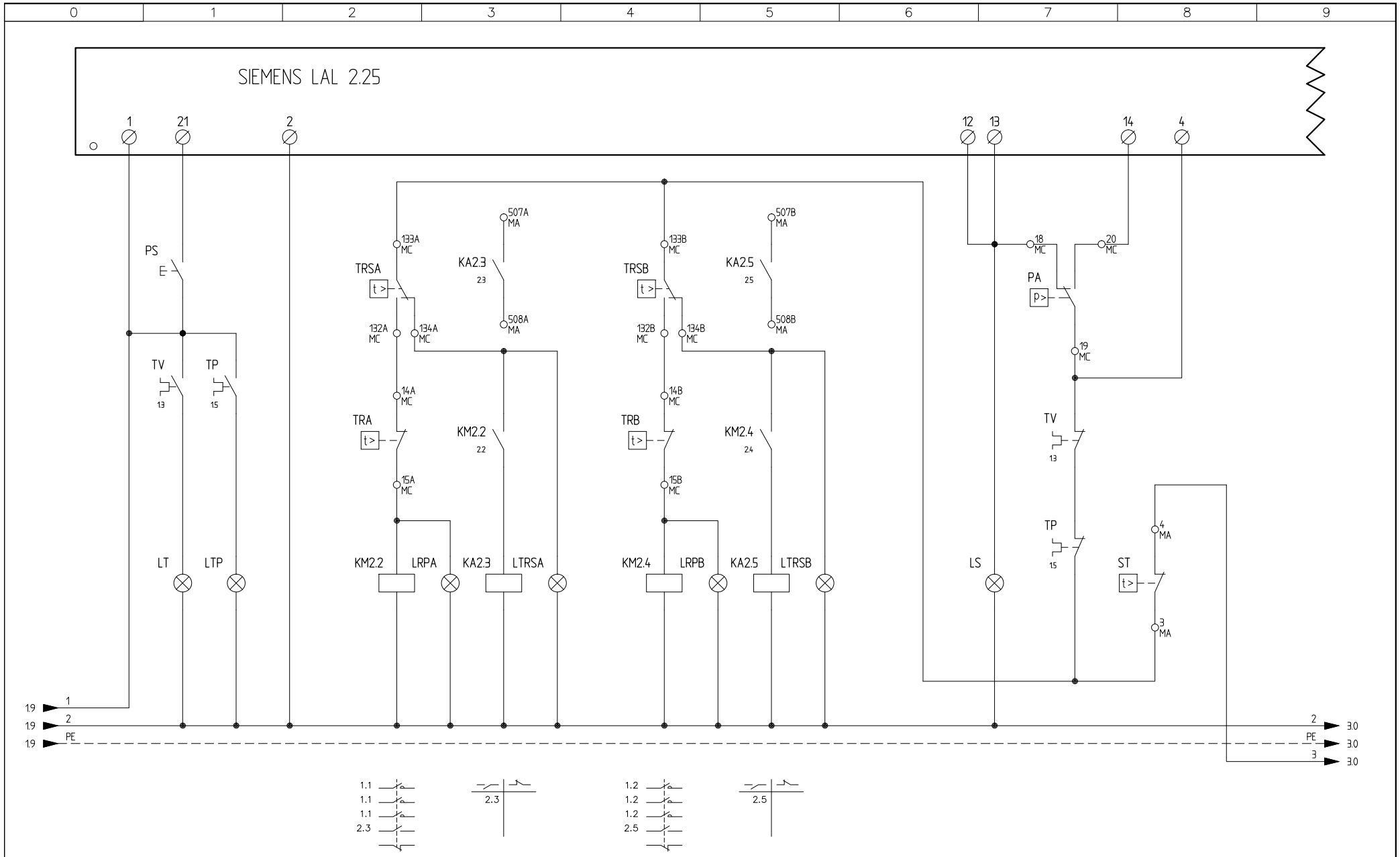

Data	27/07/2005	PREC.	FOGLIO
Revisione	03	1	2
Dis. N.	11 – 337	SEGUE	TOTALE
		3	7

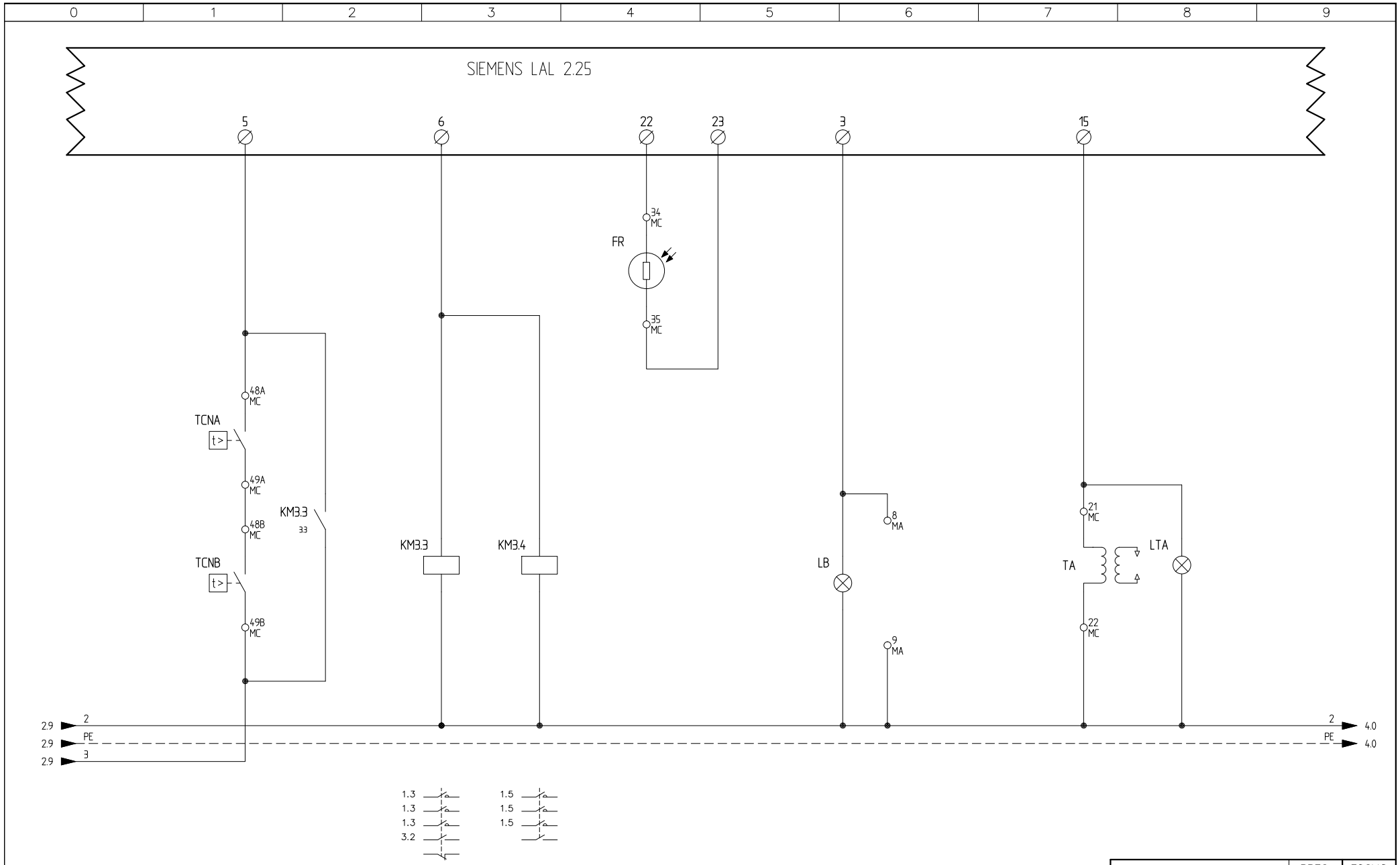

Data	27/07/2005	PREC.	FOGLIO
Revisione	03	2	3
Dis. N.	11 – 337	SEGUE	TOTALE
		4	7

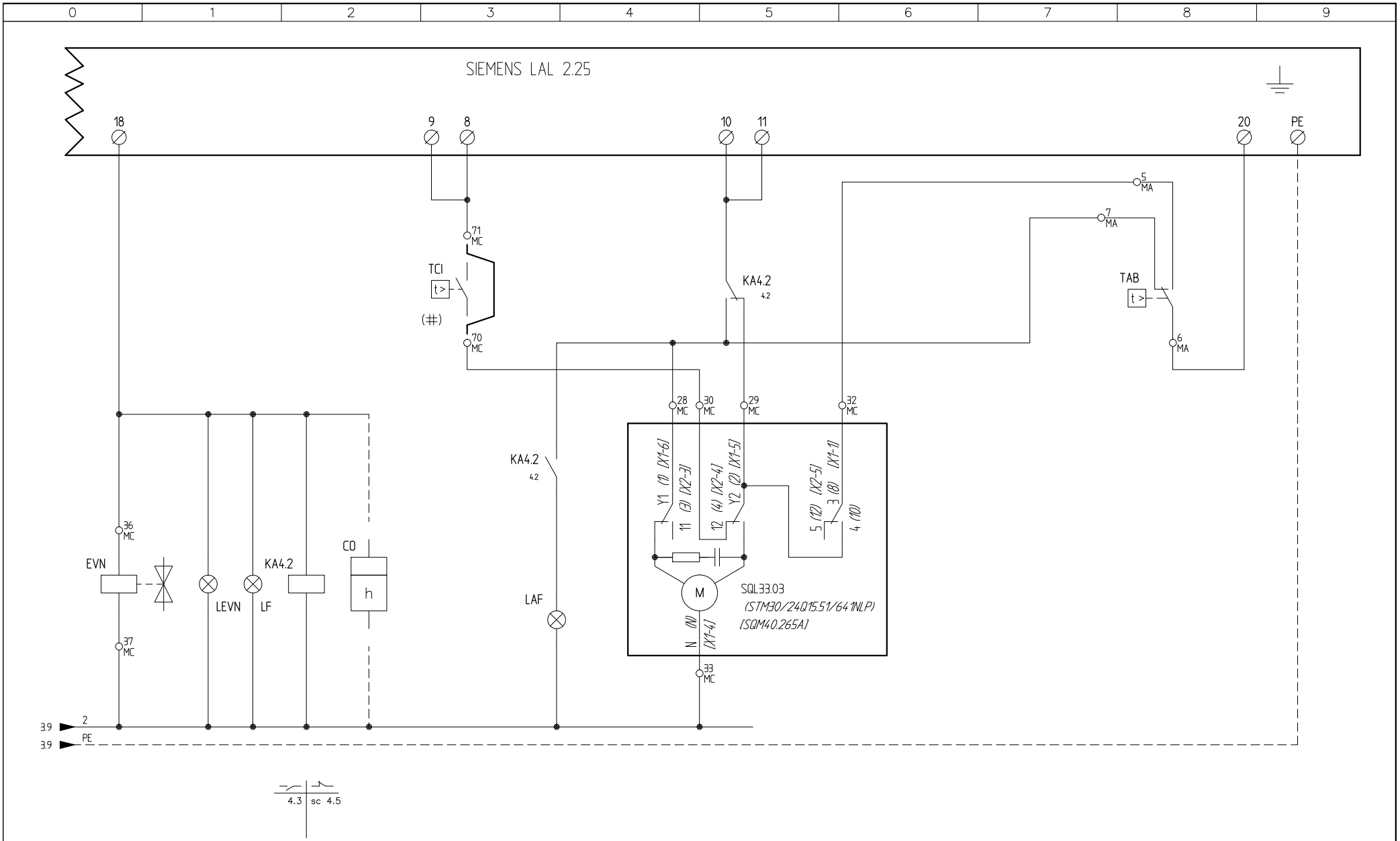

(#)
UTILIZZATO SOLO PER VERSIONI "NAFTA DENSA"
USED FOR "HEAVY OIL" VERSIONS ONLY

Data 27/07/2005		PREC.	FOGLIO
Revisione 03		3	4
Dis. N. 11 – 337		SEGUE	TOTALE
		5	7

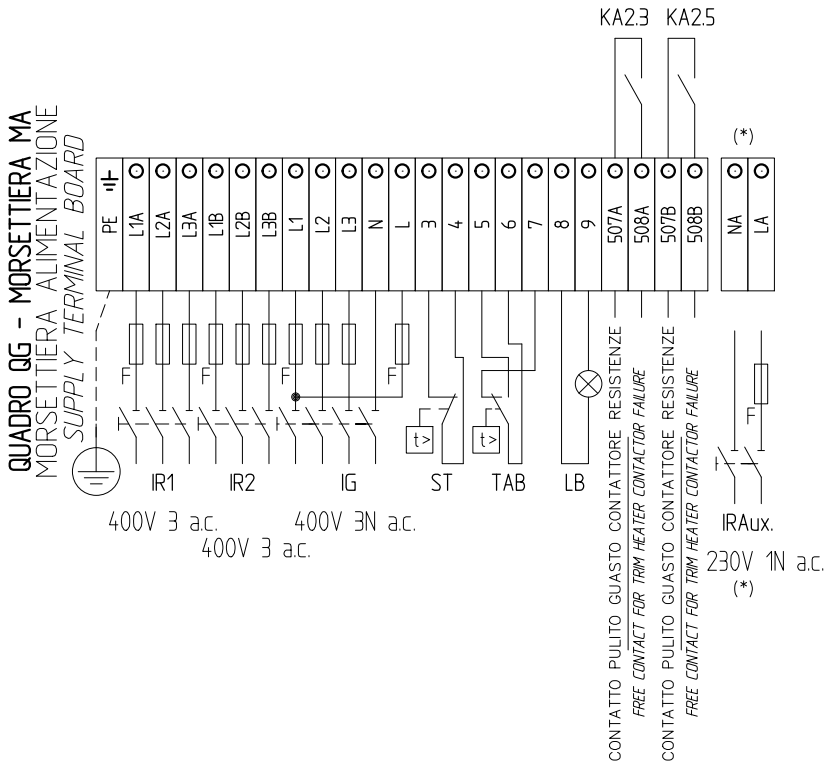

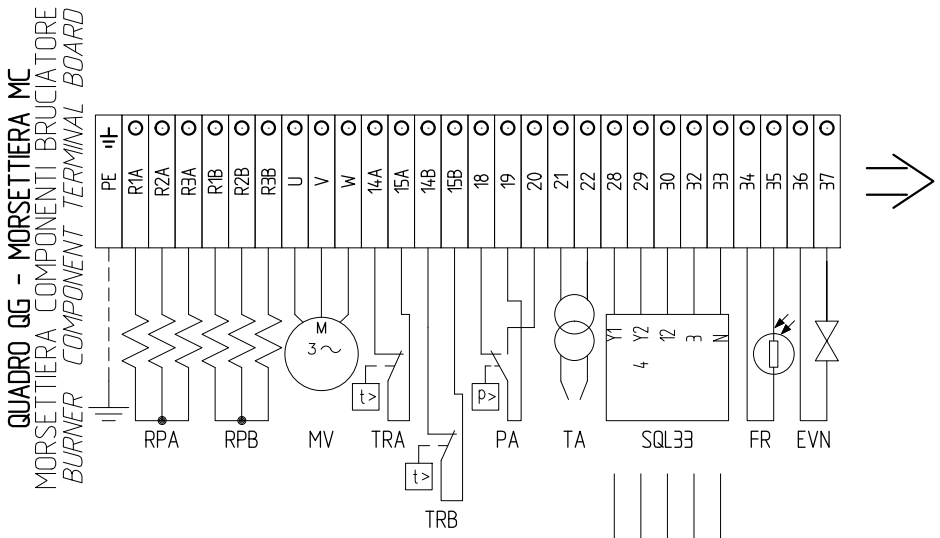

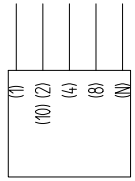

(STM30/24Q15.51/641NLP)

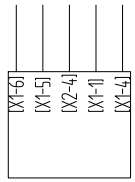

[SQM40.265A]

SERVOCOMANDO SERRANDA ARIA
AIR DAMPER ACTUATOR
SQL33.03

Y1	ALTA FIAMMA *HIGH FLAME*
Y2	SOSTA E ACCENSIONE *STAND-BY AND IGNITION*
3	BASSA FIAMMA *LOW FLAME*

SERVOCOMANDO SERRANDA ARIA (ALTERNATIVO)
AIR DAMPER ACTUATOR (ALTERNATIVE)
(STM30/24Q15.51/641NLP)

I	ALTA FIAMMA *HIGH FLAME*
II	SOSTA E ACCENSIONE *STAND-BY AND IGNITION*
III	BASSA FIAMMA *LOW FLAME*

SERVOCOMANDO SERRANDA ARIA (ALTERNATIVO)
AIR DAMPER ACTUATOR (ALTERNATIVE)
[SQM40.265A]

I	ALTA FIAMMA *HIGH FLAME*
II	SOSTA E ACCENSIONE *STAND-BY AND IGNITION*
III	BASSA FIAMMA *LOW FLAME*

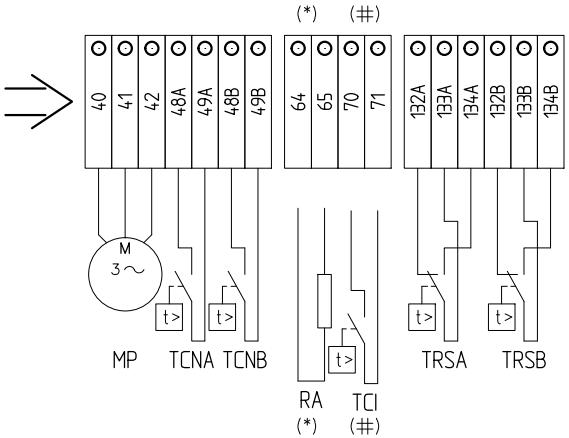

(*)
UTILIZZATO SOLO PER VERSIONI "NAFTA ECOLOGICA" E "NAFTA DENSA"
USED FOR "ECODEN" AND "HEAVY OIL" VERSIONS ONLY

(#)
UTILIZZATO SOLO PER VERSIONI "NAFTA DENSA"
USED FOR "HEAVY OIL" VERSIONS ONLY

Data 27/07/2005		PREC.	FOGLIO
Revisione 03		4	5
Dis. N. 11 – 337		SEGUE	TOTALE
		6	7

	SIGLA/ITEM	FOGLIO/SHEET	FUNZIONE	FUNCTION
	(STM30/24Q15.51/641NLP)	4	SERVOCOMANDO SERRANDA ARIA (ALTERNATIVO)	AIR DAMPER ACTUATOR (ALTERNATIVE)
	CO	4	CONTAORE DI FUNZIONAMENTO (OPTIONAL)	OPERATION TIME COUNTER (OPTIONAL)
	EVN	4	ELETTROVALVOLA NAFTA	OIL SOLENOID VALVE
	FR	3	FOTORESISTENZA RILEVAZIONE FIAMMA	PHOTORESISTOR FLAME DETECTOR
	FU1.0	1	FUSIBILI LINEA PRERISCALDATORE [RPA]	LINE PRE-HEATING [RPA] FUSES
	FU1.1	1	FUSIBILI LINEA PRERISCALDATORE [RPB]	LINE PRE-HEATING [RPB] FUSES
	FU1.2	1	FUSIBILI LINEA BRUCIATORE	BURNER LINE FUSES
	FU1.5	1	FUSIBILI LINEA POMPA NAFTA	OIL PUMP LINE FUSES
	FU1.7	1	FUSIBILE LINEA AUSILIARI	AUXILIARY LINE FUSE
(*)	FU1.8	1	FUSIBILE LINEA RESISTENZE AUSILIARIE	LINE AUXILIARY RESISTORS FUSE
(*)	FU1.9	1	FUSIBILE RESISTENZE AUSILIARIE	AUXILIARY RESISTORS FUSE
	IG	1	INTERRUTTORE LINEA BRUCIATORE	BURNER LINE SWITCH
	IL	1	INTERRUTTORE LINEA AUSILIARI	AUXILIARY LINE SWITCH
	IR1	1	INTERRUTTORE LINEA RESISTENZE PRERISCALDATORE	PRE-HEATING RESISTORS LINE SWITCH
	IR2	1	INTERRUTTORE LINEA RESISTENZE PRERISCALDATORE	PRE-HEATING RESISTORS LINE SWITCH
(*)	IRA	1	INTERRUTTORE RESISTENZE AUSILIARIE	AUXILIARY RESISTORS SWITCH
(*)	IRAux.	1	INTERRUTTORE RESISTENZE AUSILIARIE	AUXILIARY RESISTORS SWITCH
	KA2.3	2	RELE' AUSILIARIO SEGNALAZIONE GUASTO CONTATTORE RESISTENZE	AUXILIARY RELAY FOR TRIM HEATER CONTACTOR FAILURE
	KA2.5	2	RELE' AUSILIARIO SEGNALAZIONE GUASTO CONTATTORE RESISTENZE	AUXILIARY RELAY FOR TRIM HEATER CONTACTOR FAILURE
	KA4.2	4	RELE' AUSILIARIO	AUXILIARY RELAY
	KM2.2	2	CONTATTORE RESISTENZE PRERISCALDATORE [RPA]	PRE-HEATING RESISTORS [RPA] CONTACTOR
	KM2.4	2	CONTATTORE RESISTENZE PRERISCALDATORE [RPB]	PRE-HEATING RESISTORS [RPB] CONTACTOR
	KM3.3	3	CONTATTORE MOTORE VENTILATORE (LINEA)	FAN MOTOR CONTACTOR (LINE)
	KM3.4	3	CONTATTORE MOTORE POMPA NAFTA	OIL PUMP MOTOR CONTACTOR
	LAF	4	LAMPADA SEGNALAZIONE ALTA FIAMMA BRUCIATORE	BURNER IN HIGH FLAME INDICATOR LIGHT
	LB	3	LAMPADA SEGNALAZIONE BLOCCO BRUCIATORE	INDICATOR LIGHT FOR BURNER LOCK-OUT
	LEVN	4	LAMPADA SEGNALAZIONE APERTURA EVN	INDICATOR LIGHT FOR OPENING OF ELECTRO-VALVE EVN
	LF	4	LAMPADA SEGNALAZIONE BASSA FIAMMA BRUCIATORE	BURNER IN LOW FLAME INDICATOR LIGHT
	LRPA	2	LAMPADA SEGNALAZIONE FUNZIONAMENTO PRERISCALDATORE [RPA]	INDICATOR LIGHT FOR PRE-HEATING RESISTOR [RPA] OPERATION
	LRPB	2	LAMPADA SEGNALAZIONE FUNZIONAMENTO PRERISCALDATORE [RPB]	INDICATOR LIGHT FOR PRE-HEATING RESISTOR [RPB] OPERATION
	LS	2	LAMPADA SEGNALAZIONE SOSTA BRUCIATORE	INDICATOR LIGHT FOR BURNER STAND-BY
	LT	2	LAMPADA SEGNALAZIONE BLOCCO TERMICO	INDICATOR LIGHT FOR MOTOR THERMAL CUTOUT

(*)
UTILIZZATO SOLO PER VERSIONI "NAFTA ECOLOGICA" E "NAFTA DENSA"
USED FOR "ECODEN" AND "HEAVY OIL" VERSIONS ONLY

(#)
UTILIZZATO SOLO PER VERSIONI "NAFTA DENSA"
USED FOR "HEAVY OIL" VERSIONS ONLY

Data 27/07/2005		PREC.	FOGLIO
Revisione 03		5	6
Dis. N. 11 – 337		SEGUE	TOTALE
		7	7

	SIGLA/ITEM	FOGLIO/SHEET	FUNZIONE	FUNCTION
	LTA	3	LAMPADA SEGNALAZIONE TRASFORMATORE DI ACCENSIONE	IGNITION TRANSFORMER INDICATOR LIGHT
	LTP	2	LAMPADA SEGNALAZIONE BLOCCO TERMICO POMPA	INDICATOR LIGHT FOR PUMP OVERLOAD TRIPPED
	LTRSA	2	LAMPADA SEGNALAZIONE BLOCCO TERMOSTATO DI SICUREZZA [TRSA]	INDICATOR LIGHT FOR [TRSA] SAFETY THERMOSTAT
	LTRSB	2	LAMPADA SEGNALAZIONE BLOCCO TERMOSTATO DI SICUREZZA [TRSB]	INDICATOR LIGHT FOR [TRSB] SAFETY THERMOSTAT
	MP	1	MOTORE POMPA NAFTA	OIL PUMP MOTOR
	MV	1	MOTORE VENTILATORE	FAN MOTOR
	PA	2	PRESSOSTATO ARIA	AIR PRESSURE SWITCH
	PS	2	PULSANTE SBLOCCO FIAMMA	LOCK-OUT RESET BUTTON
(*)	RA	1	RESISTENZE AUSILIARIE	AUXILIARY RESISTORS
	RPA	1	RESISTENZE PRERISCALDATORE NAFTA	PRE-HEATING TANK RESISTORS
	RPB	1	RESISTENZE PRERISCALDATORE NAFTA	PRE-HEATING TANK RESISTORS
	SIEMENS LAL 2.25	2	APPARECCHIATURA CONTROLLO FIAMMA	CONTROL BOX
	SQL33.03	4	SERVOCOMANDO SERRANDA ARIA	AIR DAMPER ACTUATOR
	ST	2	SERIE TERMOSTATI/PRESSOSTATI	SERIES OF THERMOSTATS OR PRESSURE SWITCHES
	TA	3	TRASFORMATORE DI ACCENSIONE	IGNITION TRANSFORMER
	TAB	4	TERMOSTATO/PRESSOSTATO ALTA-BASSA FIAMMA	HIGH-LOW THERMOSTAT/PRESSURE SWITCHES
(#)	TCI	4	TERMOSTATO CONSENSO IMPIANTO	PLANT CONSENT THERMOSTAT
	TCNA	3	TERMOSTATO CONSENSO NAFTA PRERISCALDATORE [RPA]	OIL CONSENT THERMOSTAT FOR PRE- HEATING [RPA] RESISTORS
	TCNB	3	TERMOSTATO CONSENSO NAFTA PRERISCALDATORE [RPB]	OIL CONSENT THERMOSTAT FOR PRE- HEATING [RPB] RESISTORS
	TP	1	TERMICO MOTORE POMPA NAFTA	OIL PUMP MOTOR THERMAL
	TRA	2	TERMOSTATO DI REGOLAZIONE PRERISCALDATORE [RPA]	REGULATION THERMOSTAT FOR PRE-HEATING [RPA] RESISTORS
	TRB	2	TERMOSTATO DI REGOLAZIONE PRERISCALDATORE [RPB]	REGULATION THERMOSTAT FOR PRE-HEATING [RPB] RESISTORS
	TRSA	2	TERMOSTATO DI SICUREZZA PRERISCALDATORE [RPA]	PRE-HEATING [RPA] A SAFETY THERMOSTAT
	TRSB	2	TERMOSTATO DI SICUREZZA PRERISCALDATORE [RPB]	PRE-HEATING [RPB] A SAFETY THERMOSTAT
	TV	1	TERMICO MOTORE VENTILATORE	FAN MOTOR THERMAL
	[SQM40.265A]	4	SERVOCOMANDO SERRANDA ARIA (ALTERNATIVO)	AIR DAMPER ACTUATOR (ALTERNATIVE)

(*)
UTILIZZATO SOLO PER VERSIONI "NAFTA ECOLOGICA" E "NAFTA DENSA"
USED FOR "ECODEN" AND "HEAVY OIL" VERSIONS ONLY

(#)
UTILIZZATO SOLO PER VERSIONI "NAFTA DENSA"
USED FOR "HEAVY OIL" VERSIONS ONLY

Data 27/07/2005	PREC.	FOGLIO
Revisione 03	6	7
Dis. N. 11 – 337	SEGUE	TOTALE
	/	7