BURNERS
BRULEURS
BRENNER
QUEMADORES
BRUCIATORI

MANUAL OF
- INSTALLATION
- OPERATION
- MAINTENANCE

HEAVY OIL BURNERS

PN30

SINGLE STAGE VERSION

M03930CC Rev. 02 06/01

NOTICES

THIS MANUAL IS SUPPLIED AS AN INTEGRAL AND ESSENTIAL PART OF THE PRODUCT AND MUST BE DELIVERED TO THE USER.

INFORMATION INCLUDED IN THIS SECTION ARE DEDICATED BOTH TO THE USER AND TO PERSONNEL FOLLOWING PRODUCT INSTALLATION AND MAINTENANCE.

THE USER WILL FIND FURTHER INFORMATION ABOUT OPERATING AND USE RESTRICTIONS, IN THE SECOND SECTION OF THIS MANUAL. WE HIGHLY RECOMMEND TO READ IT.

CAREFULLY KEEP THIS MANUAL FOR FUTURE REFERENCE.

1) GENERAL INTRODUCTION

- The equipment must be installed in compliance with the regulations in force, following the manufacturer's instructions, by qualified personnel.
- Qualified personnel means those having technical knowledge in the field of components for civil or industrial heating systems, sanitary hot water generation and particularly service centres authorised by the manufacturer.
- Improper installation may cause injury to people and animals, or damage to property, for which the manufacturer cannot be held liable.
- Remove all packaging material and inspect the equipment for integrity.

In case of any doubt, do not use the unit - contact the supplier.
The packaging materials (wooden crate, nails, fastening devices, plastic bags, foamed polystyrene, etc), should not be left within the reach of children, as they may prove harmful.

- Before any cleaning or servicing operation, disconnect the unit from the mains by turning the master switch OFF, and/or through the cut-out devices that are provided.
- Make sure that inlet or exhaust grilles are unobstructed.
- In case of breakdown and/or defective unit operation, disconnect the unit. Make no attempt to repair the unit or take any direct action.

Contact qualified personnel only.
Units shall be repaired exclusively by a servicing centre, duly authorised by the manufacturer, with original spare parts.
Failure to comply with the above instructions is likely to impair the unit's safety.
To ensure equipment efficiency and proper operation, it is essential that maintenance operations are performed by qualified personnel at regular intervals, following the manufacturer's instructions.

- When a decision is made to discontinue the use of the equipment, those parts likely to constitute sources of danger shall be made harmless.
- In case the equipment is to be sold or transferred to another user, or in case the original user should move and leave the unit behind, make sure that these instructions accompany the equipment at all times so that they can be consulted by the new owner and/or the installer.
- For all the units that have been modified or have options fitted then original accessory equipment only shall be used.
- This unit shall be employed exclusively for the use for which it is meant. Any other use shall be considered as improper and, therefore, dangerous.

The manufacturer shall not be held liable, by agreement or otherwise, for damages resulting from improper installation, use and failure to comply with the instructions supplied by the manufacturer.

2) SPECIAL INSTRUCTIONS FOR BURNERS

- The burner should be installed in a suitable room, with ventilation openings complying with the requirements of the regulations in force, and sufficient for good combustion.
- Only burners designed according to the regulations in force should be used.
- This burner should be employed exclusively for the use for which it was designed.
- Before connecting the burner, make sure that the unit rating is the same as delivery mains (electricity, gas oil, or other fuel).
- Observe caution with hot burner components. These are, usually, near to the flame and the fuel pre-heating system, they become hot during the unit operation and will remain hot for some time after the burner has stopped.

When the decision is made to discontinue the use of the burner, the user shall have qualified personnel carry out the following operations:

a) Remove the power supply by disconnecting the power cord from the mains.

b) Disconnect the fuel supply by means of the hand-operated shut-off valve and remove the control handwheels from their spindles.

Special warnings

- Make sure that the burner has, on installation, been firmly secured to the appliance, so that the flame is generated inside the appliance firebox.
- Before the burner is started and, thereafter, at least once a year, have qualified personnel perform the following operations:

a) set the burner fuel flow rate depending on the heat input of the appliance;

b) set the flow rate of the combustion-supporting air to obtain a combustion efficiency level at least equal to the lower level required by the regulations in force;

c) check the unit operation for proper combustion, to avoid any harmful or polluting unburnt gases in excess of the limits permitted by the regulations in force;

d) make sure that control and safety devices are operating properly;

e) make sure that exhaust ducts intended to discharge the products of combustion are operating properly;

f) on completion of setting and adjustment operations, make sure that all mechanical locking devices of controls have been duly tightened;

g) make sure that a copy of the burner use and maintenance instructions is available in the boiler room.

- In case of repeated burner shut-downs, do not continue resetting the unit manually. Contact qualified personnel to take care of such defects.
- The unit shall be operated and serviced by qualified personnel only, in compliance with the regulations in force.

3) GENERAL INSTRUCTIONS DEPENDING ON FUEL USED

3a) ELECTRICAL CONNECTION

- For safety reasons the unit must be efficiently earthed and installed as required by current safety regulations.
- It is vital that all saftey requirements are met. In case of any doubt, ask for an accurate inspection of electrics by qualified personnel, since the manufacturer cannot be held liable for damages that may be caused by failure to correctly earth the equipment.
- Qualified personnel must inspect the system to make sure that it is adequate to take the maximum power used by the equipment shown on the equipment rating plate. In particular, make sure that the system cable cross section is adequate for the power absorbed by the unit.
- No adaptors, multiple outlet sockets and/or extension cables are permitted to connect the unit to the electric mains.
- An omnipolar switch shall be provided for connection to mains, as required by the current safety regulations.
- The use of any power-operated component implies observance of a few basic rules, for example:
  - ◆ do not touch the unit with wet or damp parts of the body and/or with bare feet;
  - ◆ do not pull electric cables;
  - ◆ do not leave the equipment exposed to weather (rain, sun, etc.) unless expressly required to do so;
  - ◆ do not allow children or inexperienced persons to use equipment;
- The unit input cable shall not be replaced by the user.

In case of damage to the cable, switch off the unit and contact qualified personnel to replace.
When the unit is out of use for some time the electric switch supplying all the power-driven components in the system (i.e. pumps, burner, etc.) should be switched off.

3b) FIRING WITH GAS, LIGHT OIL OR OTHER FUELS

GENERAL

- The burner shall be installed by qualified personnel and in compliance with regulations and provisions in force; wrong installation can cause injuries to people and animals, or damage to property, for which the manufacturer cannot be held liable.
- Before installation, it is recommended that all the fuel supply system pipes be carefully cleaned inside, to remove foreign matter that might impair the burner operation.
- Before the burner is commissioned, qualified personnel should inspect the following:

a) the fuel supply system, for proper sealing;

b) the fuel flow rate, to make sure that it has been set based on the firing rate required of the burner;

c) the burner firing system, to make sure that it is supplied for the designed fuel type;

d) the fuel supply pressure, to make sure that it is included in the range shown on the rating plate;

e) the fuel supply system, to make sure that the system dimensions are adequate to the burner firing rate, and that the system is equipped with all the safety and control devices required by the regulations in force.

- When the burner is to remain idle for some time, the fuel supply tap or taps should be closed.

SPECIAL INSTRUCTIONS FOR USING GAS

Have qualified personnel inspect the installation to ensure that:

a) the gas delivery line and train are in compliance with the regulations and provisions in force;

b) all gas connections are tight;

c) the boiler room ventilation openings are such that they ensure the air supply flow required by the current regulations, and in any case are sufficient for proper combustion.

- Do not use gas pipes to earth electrical equipment.
- Never leave the burner connected when not in use. Always shut the gas valve off.
- In case of prolonged absence of the user, the main gas delivery valve to the burner should be shut off.

Precautions if you can smell gas

a) do not operate electric switches, the telephone, or any other item likely to generate sparks;

b) immediately open doors and windows to create an air flow to purge the room;

c) close the gas valves;

d) contact qualified personnel.

- Do not obstruct the ventilation openings of the room where gas appliances are installed, to avoid dangerous conditions such as the development of toxic or explosive mixtures.

TECHNICAL DATA

BURNER		PN30
Input	min. kcal/h	140.000
	max. kcal/h	300.000
	min. kW	163
	max. kW	349
Oil rate	min. Kg/h	14
	max. Kg/h	30
Fuel		heavy oil
Power supply	V	230/400
Frequency	Hz	50
Motor 2800 rpm	kW	0.74
Pre-heater resistor	kW	2.4
Total electrical power	kW	3.65
Weight	Kg	60
Operation		single stage
Destination country		*

BURNER MODEL IDENTIFICATION

Burners are identified by burner type and model. Burner model identification is described here following.

Type: **PN30**	Model:	**N-.**	**TN.**	**S.**	**IT.**	**A.**
(1)		(2)	(3)	(4)	(5)	(6)

(1) BURNER TYPE

(2) FUEL
- N - Heavy oil, viscosity up to 7° E at 50° C
- E - Eco heavy oil (environmental friendly), viscosity 12 °E at 50°C
- D - Heavy oil, viscosity up to 50° E at 50° C

(3) OPERATION — Available versions: AB - Double stage

(4) BLAST TUBE LENGHT — (See overall dimensions)
Available versions:
- S - Standard
- L - Long

(5) DESTINATION COUNTRY
- * - see data plate

(6) SPECIAL VERSIONS
- A - Standard E - with junction box
- Y - SpecialeM - Wall mounting electrical board
- G - Floor standing electrical board and junction box

OVERALL DIMENSIONS

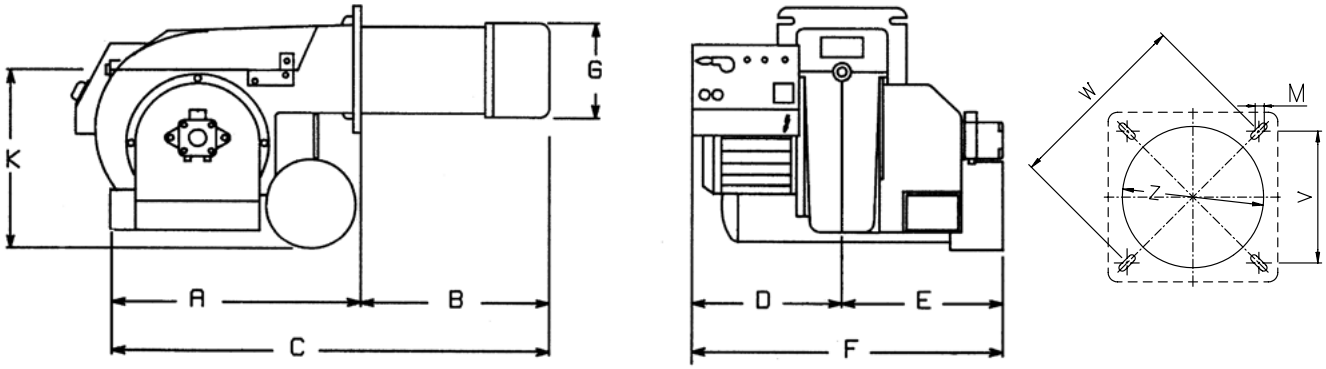

Fig. 4

	A	B	BL	C	CL	D	E	F	G	K	Z	V	W	M
PN30	520	160	350	680	870	270	450	720	131	400	160	155	219	M10

PERFORMANCE CURVE

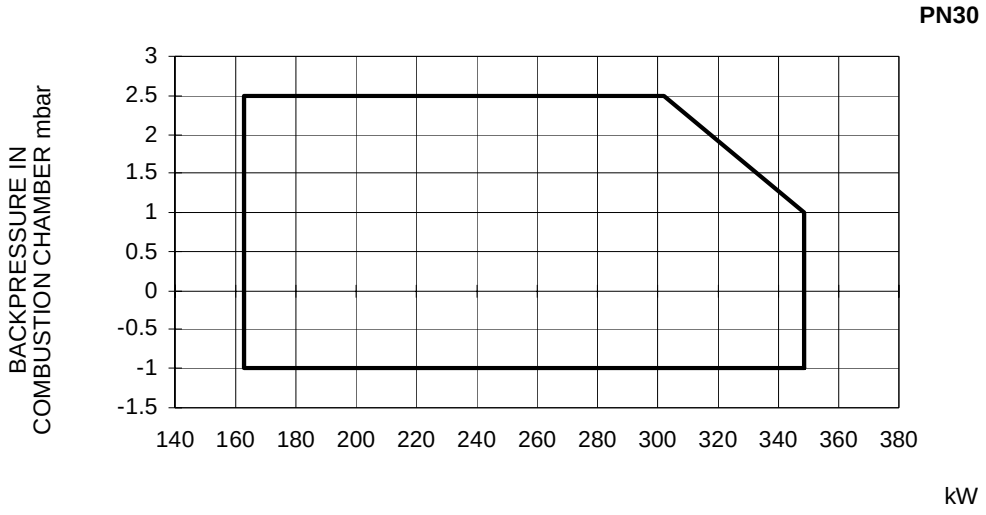

MOUNTINGS AND CONNECTIONS

Imballo

The burners are despatched in wodden crates of dimensions 10070 x 740 x 840 (W x H x D).

Packing cases of this type are affected by humidity and are not suitable for stacking. The following are placed in each packing case:

1 burner

2 flexible light oil tubes;

1 oil filter;

1 this manual, the test certificate and the compliance declaration.

To get rid of the burner's packing and in the event of scrapping of the latter, follow the procedures laid down by current laws on disposal of materials.

Fitting burner to the boiler

After fitting the burner to the boiler see that the space between the blast tube and the refractory lining is sealed with appropriate insulating material (ceramic fibre cord or refractory cement).

Key

5 Burner

6 Fixing nut

7 Washer

8 Seal

9 Stud bolt

10 Sightglass cleaning tube

11 Blast tube

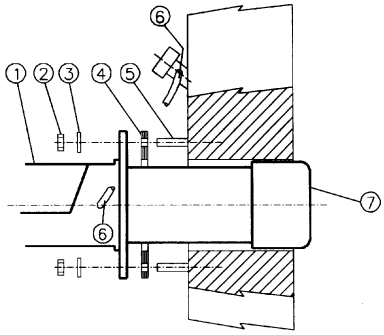

Fig. 5

Matching the burner to the boiler

To correctly match the burner to the boiler verify the necessary input and the pressure in combustion chamber are included in the burner performance curve; otherwise the choice of the burner must be revised consulting the burner manufacturer. To choose the blast tube lenght follow the instructions of the boiler manufacturer. In absence of these consider the following:

- Cast-iron boilers, three pass flue boilers (with the first pass in the rear part): the blast tube must protrude no more than 100 mm into the combustion chamber.

The length of the blast tubes does not always allow this requirement to be met, and thus it may be necessary to use a suitably-sized spacer to move the burner backwards.

- Pressurised boilers with flame reversal: in this case the blast tube must penetrate at least 50 - 100 mm into combustion chamber in respect to the tube bundle plate.

ELECTRICAL CONNECTIONS

- Remove the front panel of the electrical board on the burner.

Carry out the connections in the power supply electrical board as shown in Fig. 6; verify the fan motor direction and refit the electrical board front panel.

WARNING: The burner is fitted with an electrical bridge between terminals 6 and 7, in the event of connecting the high/low flame thermostat remove this bridge before connecting the thermostat.

IMPORTANT: In connecting electric supply wires to burner teminal block be sure that ground wire should be longer than phase and neutral ones.

- For a complete key of electrical diagrams see on page 22.

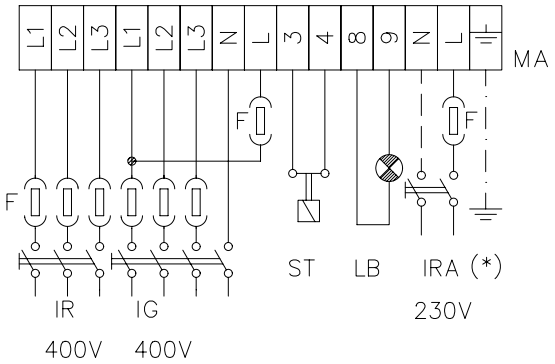

Fig. 6

RESPECT THE BASIC SAFETY RULES. MAKE SURE OF THE CONNECTION TO THE EARTHING SYSTEM. DO NOT REVERSE THE PHASE AND NEUTRAL CONNECTIONS. FIT A DIFFERENTIAL THERMAL MAGNET SWITCH ADEQUATE FOR CONNECTION TO THE MAINS.

Fan motor direction

After completing the electrical connection of the burner, remember to check the rotation of the fan motor. The motor should rotate in an anti-clockwise direction looking at cooling fan. In the event of incorrect rotation reverse the three-phase supply and check again the rotation of the motor.

ATTENTION: the burners are supplied for three-phase 400 V supply, and in the case of three-phase 230 V supply it is necessary to modify the electrical connections inside the terminal box of the electric motor, replace the thermal overload relay and modify the resistors connections.

Pre-heater resistors
2.4 - 4.5 kW

Fig. 7a

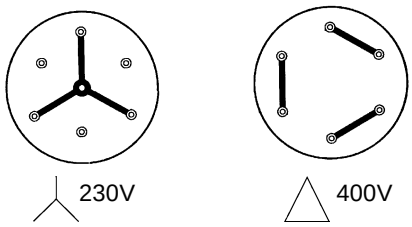

Electrical motor terminal block

Fig. 7b

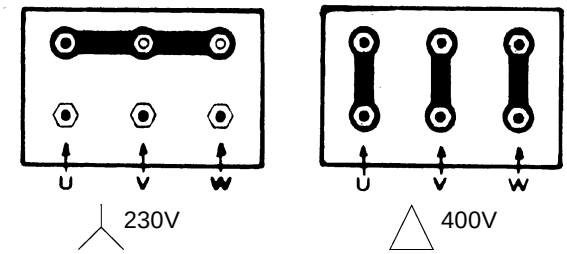

HYDRAULIC DIAGRAMS 3ID0010 E 3ID0012 - Complete key

1 Oil storage tank
2 Foot valve
3 Oil storage tank pre-heating coils (1)
4 Oil circuit filter (1 mm mesh)
5 Circuit pressure regulator
6 Pressure gauge scale 0 - 10 bars
7 Pressure regulator by-pass valve (5)
8 Gate valve
9 Oil circuit pressure regulator pump
10 Pump pressure regulator (9)
11 One-way valve
12 Oil buffer tank pre-heater (19)
13 Oil buffer tank thermostat
14 Burner enabling thermostat
15 Thermometer scale 0 - 90° C
16 Oil buffer tank heater enabling pressure switch
17 Oil buffer tank pre-heating coil (19)
18 Oil buffer tank air vent valve
19 Oil buffer tank, capacity 600 l approx.
20 Oil filter (0.3 mm mesh)
21 Fuel cutoff solenoid valve
22 Fuel gate valve
23 Burner pump hoses (24)
24 Burner oil pump
25 Pre-heating tank resistor
26 Pre-heating tank
27 Oil enabling thermostat TCN (26)
28 Pre-heating tank resistor safety thermostat TRS (26)
29 Oil temperature regulator thermostat TN (26)
30 Pre-heating tank (26) filter (0.1 mm mesh)
31 Thermometer 0 - 200° C
32 Check valve, opening 3.5 - 6 bars
33 Solenoid valve EVN1
37 Ignition enabling thermostat TCI
42 Burner enabling thermostat
43 Burner
45 Coils and tubes pre-heating pumps thermostat
46 Oil buffer tank pre-heating water pump (19)
47 Oil storage tank pre-heating water pump (1)
48 Pre-heating water balance calibration valves
50 Oil pump (diagram 3ID0012 only)
52 Maximum circuit pressure switch (if present)

OIL SUPPLY PIPING INSTALLATION DIAGRAM

Fig. 8 - Hydraulic diagram 3ID0010 for 1 burner installations

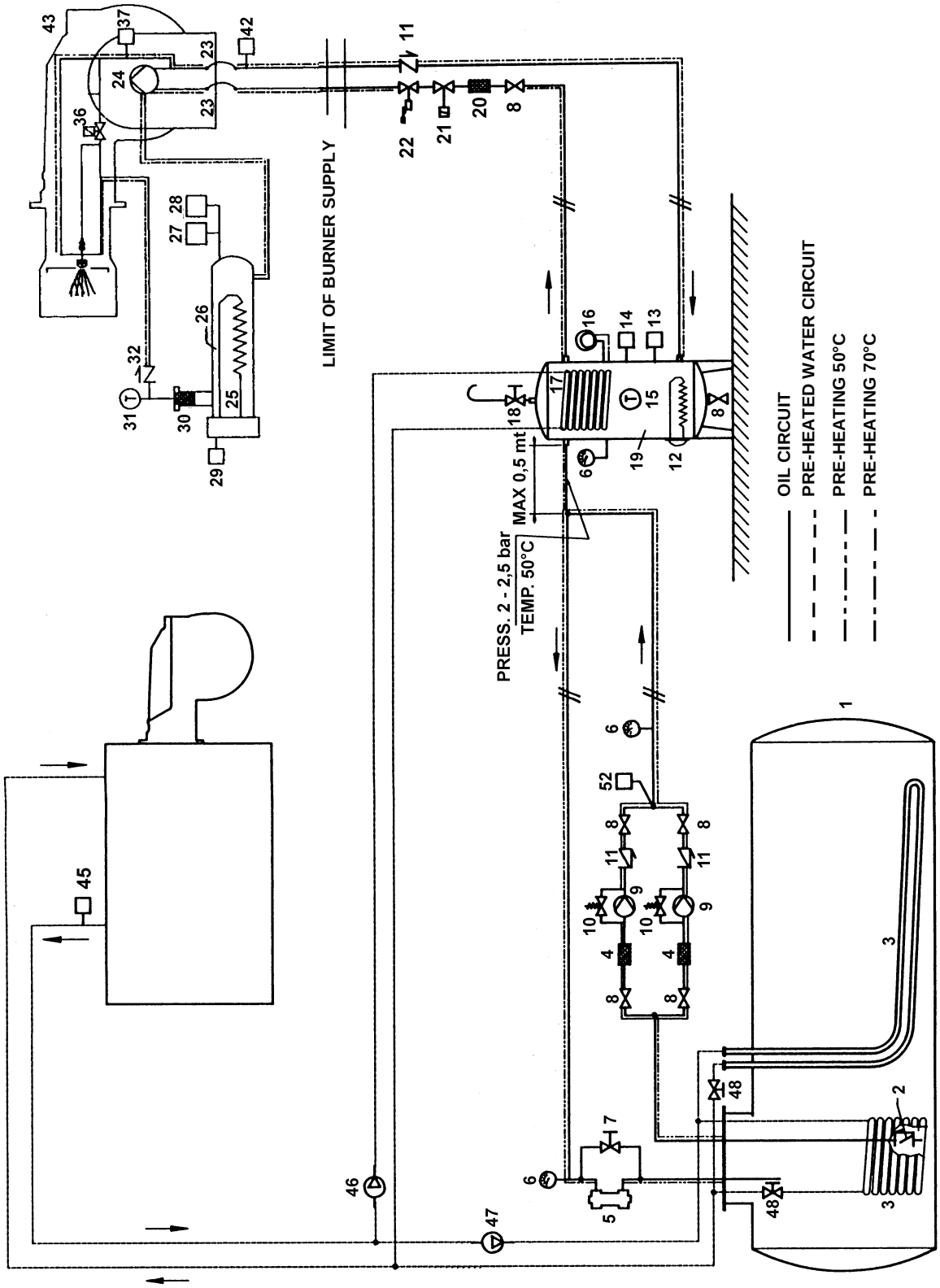

Fig. 9 - Hydraulic diagram 3ID0012 for 2 or more burners

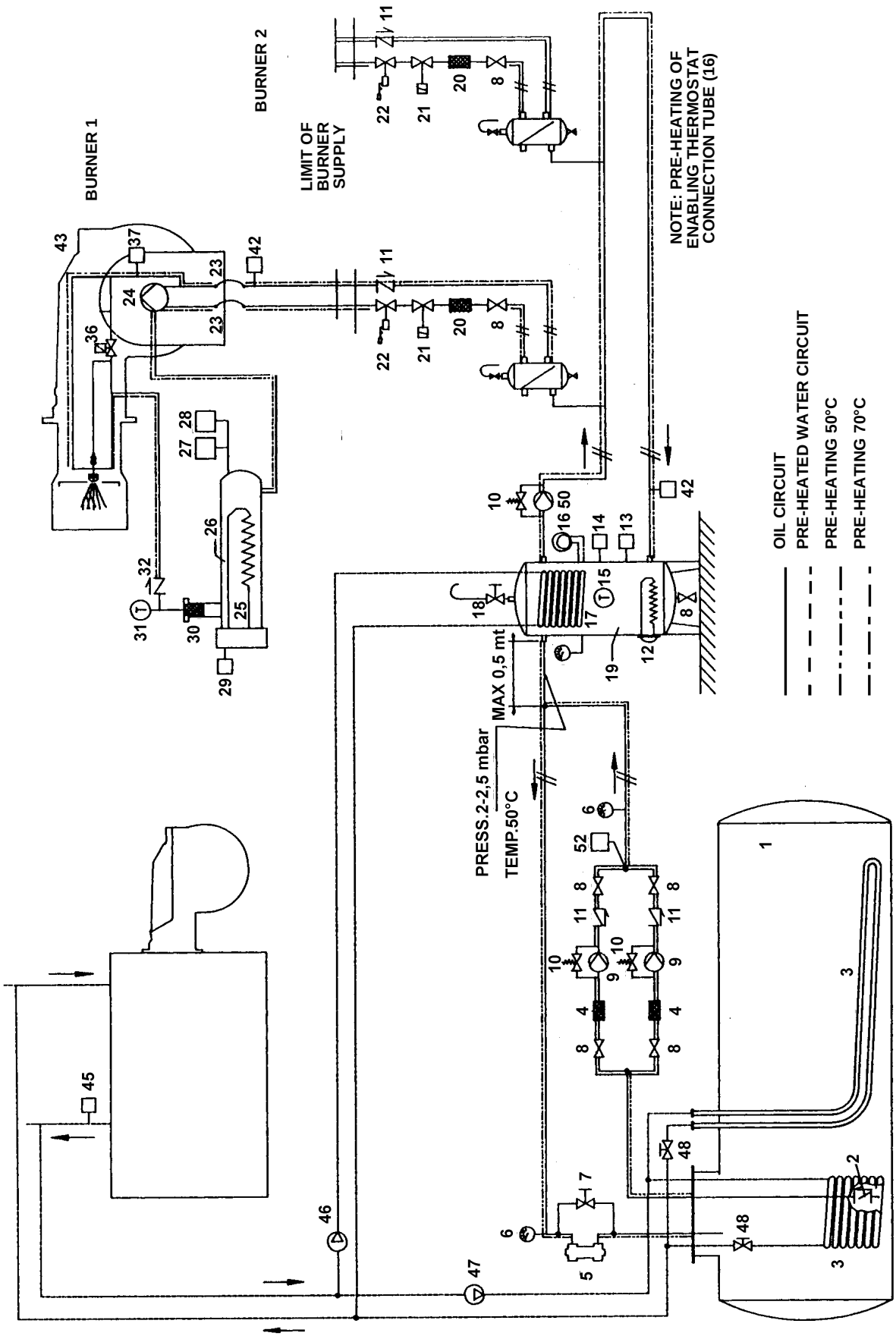

REGULATIONS

Pump priming

Before regulating, the oil pump must be primed as follows:

- Before starting up the burner, make sure the storage tank return pipe is not blocked. Blockage could cause the pump seal to break.
- Start up the burner, open the solenoid valve and vent the air at the pressure gauge connection, then illuminate the photoresistor.

Oil flow regulation

Oil flow is regulated by choosing the correct size of nozzle and calibrating pump delivery pressure (see outline oil circuit diagram in Fig. 10). To select the nozzle, consult Tab. 1. To regulate pump pressure, see page 12. Further information on oil pump characteristics are given in the appendix.

SINGLE TUBE INSTALLATION

The burners leave the factory with two-tube fuel supply. They can, however, be converted to single-tube fuel supply.

See appendix for details.

Oil circuit - operating principle

Fig. 10

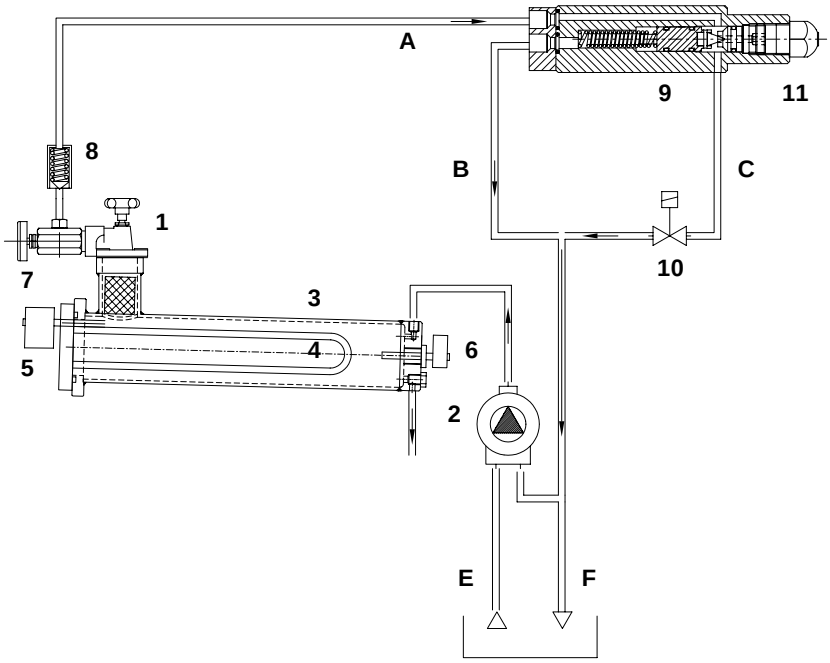

Key

1 Filter
2 Pump
3 Pre-heating tank
4 Pre-heating resistor
5 Pre-heating resistors thermostat
6 Oil enabling thermostat and safety thermostat
7 Oil thermostat
8 Check valve
9 Piston
10 Normally open valve
11 Nozzle
A Nozzle inlet
B By-passed oil
C Returned oil
D Manual drain
E Suction
F Return

SELECTING THE OIL NOZZLES

Tab. 1 - Nozzle flow rate in relation to oil pressure

NOZZLE G.P.H.	PUMP PRESSURE bar		
	24	**25***	**26**
1,35	8,70	8,90	9,10
1,50	9,70	9,90	10,10
1,65	10,60	10,90	11,10
1,75	11,30	11,50	11,70
2,00	12,90	13,20	13,40
2,25	14,50	14,80	15,10
2,50	16,10	16,50	16,80
3,00	19,30	19,70	20,10
3,50	22,50	23,00	23,50
4,00	25,80	26,30	26,80
4.50	29.00	29.60	30.20
5.00	32.20	32.90	33.60
* Pressure set in the factory			

OIL PUMPS

Pump Suntec E4

Suction height	0.5 bar
Advised value to prevent air separation from oil	0.35 bar
Rated speed max.	max. 3600 g/m
Operation viscosity	from 2.8 to 800 cSt
Oil temperature	Type 1001: max, 90° C Type 1069: max. 120° C
Maximum pressure in the suction and return piping	Type 1001: 1.5 bar Type 1069: 3.5 bar Type 1001 and 1069: 3.5 bar

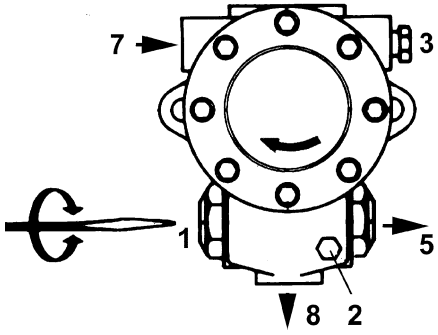

Key

1 Pressure adjustment
2 Pump pressure gauge
3 Vacuum gauge
5 Nozzle
7 Suction
8 Return

Note: the 1069 pumps are fitted with mechanical seal and electric pre-heater (80 W).

SUNTEC PUMPS			
	N-.AB...	**E-.AB...**	**D-.AB...**
PN30	E4 NC 1001	E4 NC 1069	E4 NC 1069

AIR FLOW REGULATION

Slacken the screw VBS and set the required air flow working directly on the air damper. At the end of setting tight the screw VBS.

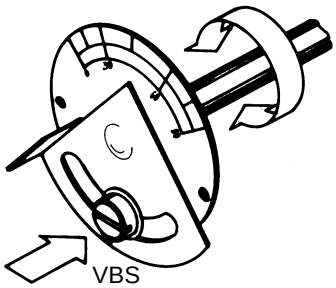

Fig. 11

OIL THERMOSTAT ADJUSTMENT

To access the thermostats, remove the cover of the burner switchboard. Calibrate using a screwdriver on the VR screw as shown in the figure.

NOTE: thermostat TCI is fitted on burners fired with fuel oil with a viscosity of 50° E at 50° C only.

TCN - oil enabling thermostat (Fig. 12a)

Calibrate this thermostat to a value 10% lower than that indicated in the viscosity-temperature diagram (Fig. 13).

TRS - Resistor safety thermostat (Fig. 12a)

The thermostat is set during factory testing at a value of about 190° C.

This thermostat trips when the operating temperature exceeds the set limit. Ascertain the cause of the malfunction and reset the thermostat using the PR button.

TR - Resistor thermostat (Fig. 12a)

Calibrate this thermostat to the correct value according to the viscosity-temperature diagram (page 14) and check the temperature using a thermometer with a scale of up to 200° C mounted on the preheating tank..

TCI - Installation enabling thermostat (Fig. 12b)

This thermostat is fitted on burners fired with oil at a viscosity of 50° E at 50° C only. Set the thermostat to a temperature about 40° C lower than the TR.

Fig. 12a Normal and environmentally friendly oil burners

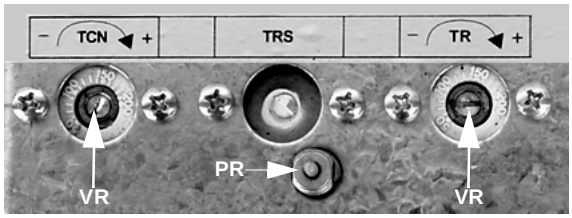

Fig. 12b - Dense oil burners

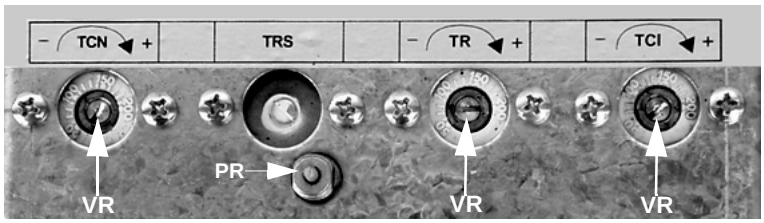

VISCOSITY VS TEMPERATURE DIAGRAM

Fig. 13

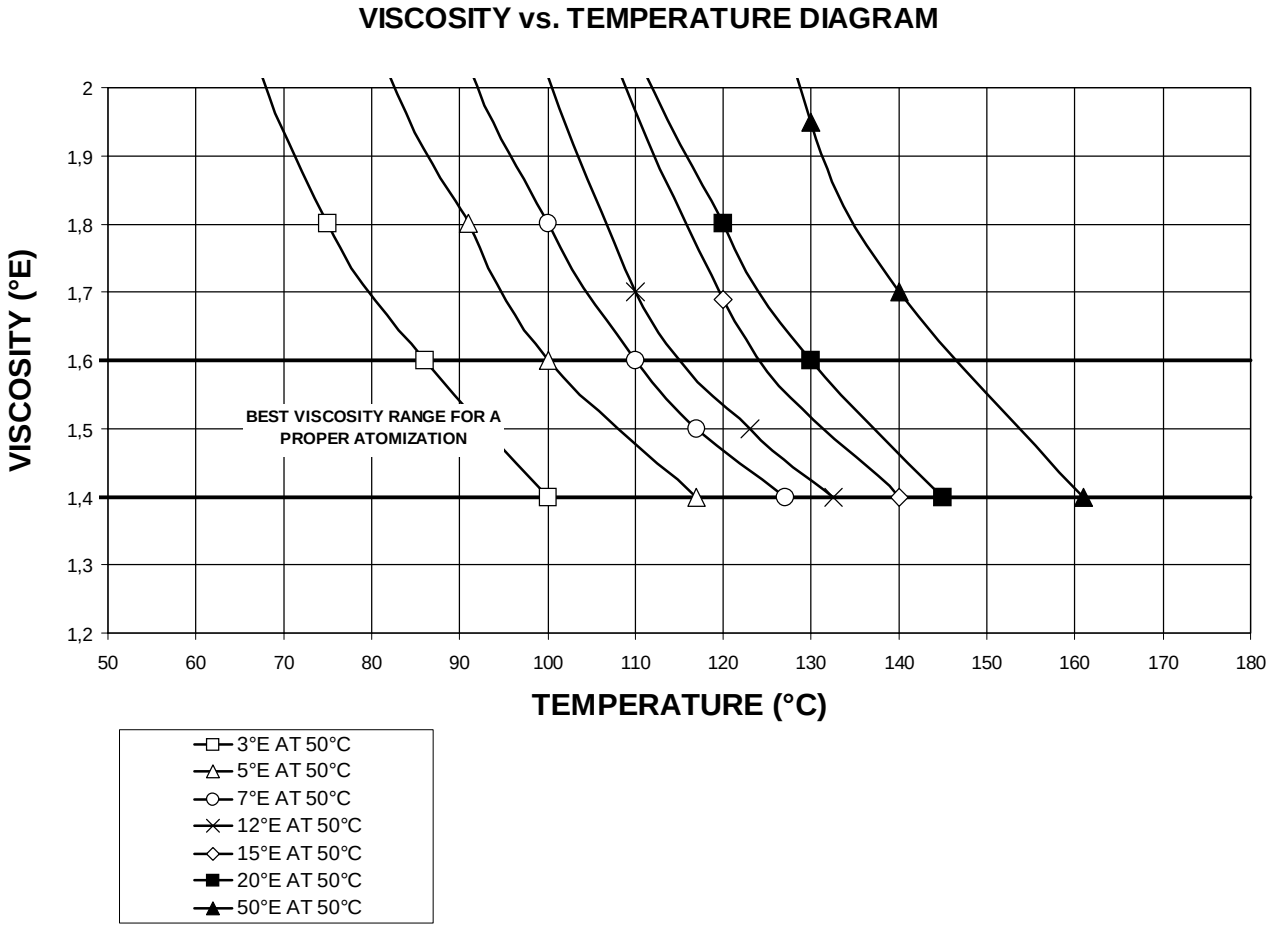

BURNER IGNITION PROCEDURE

Oil pump

- Check that mains voltage corresponds to the voltage indicated on the rating plate.
- Check oil pressure in the feeding hydraulic circuit (about 2 bars at 50°C).
- Check that the oil supply cocks are open.
- Check that the motor rotates anticlockwise looking at the motor from the cooling cover.
- Manually operate the burner motor command contactor until the pre-heating tank and entire burner oil circuit is full.

Factory settings during burner testing

Oil viscosity	**3 ÷ 5°E (N-)**	**15 ÷ 50°E (D-, E-)**
Burner head position: fully forward (maximum opening position)	-	-
Oil pressure measured at solenoid valve distribution block	25 bar	25 bar
Oil enabling thermostat TCN calibration	90°C	100°C
Oil thermostat TR calibration	120°C	130°C
Resistor safety thermostat TRS calibration	170°C	190°C
Plant enabling thermostat TCI (only dense oil burners)	-	80°
Thermal cutout calibration	according to motor rating plate	

Refer to the hydraulic diagrams on page 9 - page 10 and Fig. 14. Also see Fig. 10 on page 11.

After filling the pre-heating tank, the burner is ready for operation.

Turn on the main switch on the burner switchboard. This starts pre-heating of the oil until the temperature set on thermostat TCN is reached. The resistors remain on until the temperature set on thermostat TR is reached.

When the contact of thermostat TCN closes, the fan motor starts up and the pre-washing phase begins. During this phase, the oil is sucked up by the pump (24), passes through the filter (20) and is introduced into the tank (26) where it is pre-heated.

On leaving the pre-heating tank, the oil crosses the check valve (32) and reaches the nozzle U (normally closed by pin S). It crosses the normally open valve EN1 and returns to the oil buffer tank (19); at this stage, the pressure may vary from 3 to 10 bar.

The pre-washing phase is necessary to remove possible fuel residues accumulated during the period of inactivity and completely free the piping and nozzle assembly of obstacles. During this phase, the flow of oil to the nozzles at the ideal temperature for combustion is guaranteed.

At the end of pre-washing, the temperature at the nozzles is the same as the temperature in the pre-heating tank. The servo control supplies the EVN1 valve, the pressure in the circuit equals the one set in the pump working on the pin causing it to move back and allowing the oil to flow freely to the nozzle. This principle is valid for all models.

Fig. 14

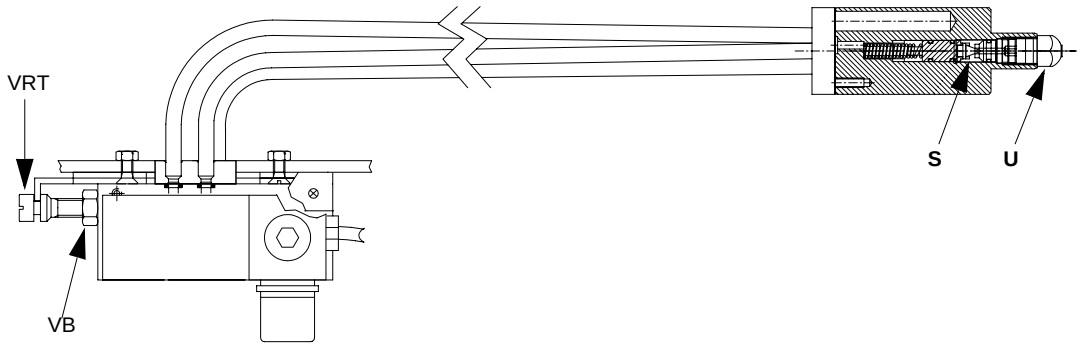

COMBUSTION HEAD SETTING

The burner is adjusted by the factory with the combustion head in the "MAX." position, corresponding to the maximum output. To operate at a reduced power, move back the combustion head progressively, towards the "MIN." position, by means of the screw VRT. (Fig. 14).

NOTE: Unloose the screw VB before start the setting and tight it at the end of setting.

PART II: OPERATION MANUAL

LIMITATIONS ON THE USE OF THE EQUIPMENT

THE BURNER HAS BEEN DESIGNED TO OPERATE ONLY AFTER IT HAS BEEN CORRECTLY CONNECTED TO A HEAT GENERATING UNIT (E.G. BOILERS, WARM AIR HEATERS, FURNACES ETC.) AND ALL OTHER USES MUST BE CONSIDERED IMPROPER AND THEREFORE DANGEROUS.

THE USERS MUST GUARANTEE THE CORRECT ASSEMBLY OF THE EQUIPMENT AND HAVE IT INSTALLED BY QUALIFIED PERSONNEL. THEY MUST HAVE THE FIRST COMMISSIONING OF THE EQUIPMENT CARRIED OUT BY A SERVICE CENTRE AUTHORIZED BY THE MANUFACTURERS OF THE BURNERS. FOR THIS PURPOSE THE ELECTRICAL CONNECTIONS TO THE REGULATING AND SAFETY EQUIPMENT OF THE GENERATOR (OPERATING THERMOSTATS, SAFETY DEVICES ETC.) WHICH ENSURE THE PROPER AND SAFE FUNCTIONING OF THE BURNER, ARE OF GREAT IMPORTANCE.

ANY OPERATION OF THE EQUIPMENT WHICH MAKES NO ALLOWANCE FOR THE INSTALLATION OPERATIONS OR WHICH OCCURS AFTER THE COMPLETE OR PARTIAL INCORRECT HANDLING OF THESE OPERATIONS (E.G. DISCONNECTION EVEN IF ONLY PARTIAL OF THE ELECTRICAL CONDUCTORS, OPENING OF THE DOOR OF THE GENERATOR, DISMANTLING OF PARTS OF THE BURNER) MUST BE OMITTED.

NEVER OPEN OR DISMANTLE ANY COMPONENT OF THE MACHINE.

ONLY OPERATE THE CONTROL SWITCH OF THE BOILER AND, WHERE APPLICABLE, THE RESET PUSH BUTTON.

IF THE EQUIPMENT BECOMES LOCKED OUT AGAIN DO NOT CONTINUE TO USE THE RE-SET PUSH BUTTON AND CONSULT QUALIFIED PERSONNEL WHO WILL BE ABLE TO ELIMINATE THE OPERATING FAULT.

WARNING: DURING NORMAL OPERATION THE PARTS OF THE BURNER NEAREST THE HEAT GENERATOR (COUPLING FLANGE) ARE SUBJECTED TO HEATING. DO NOT TOUCH THEM SO AS TO AVOID SUFFERING BURNS.

OPERATION

- Bring switch A on the burner control panel to position 1.
- Make sure the burner is not blocked (indicator light B lit). If necessary, reset using button C.
- Make sure the series of thermostats (or pressure switches) enables burner operation.
- Start the burner ignition cycle. The control unit starts up the burner fan and at the same time turns the ignition transformer on (indicated by light H on the front panel). Pre-purgue lasts 13 or 25 seconds depending on the control unit fitted on the burner.
- At the end of pre-purgue, the oil solenoid valve is powered up, indicated by the indicator light D on the graphic panel. The burner is ignited.
- The ignition transformer remains on for a few seconds after flame ignition (post-ignition time). At the end of this period, it is cut out of the circuit and indicator light H goes out.

Single stage burners front panel

Fig. 15a

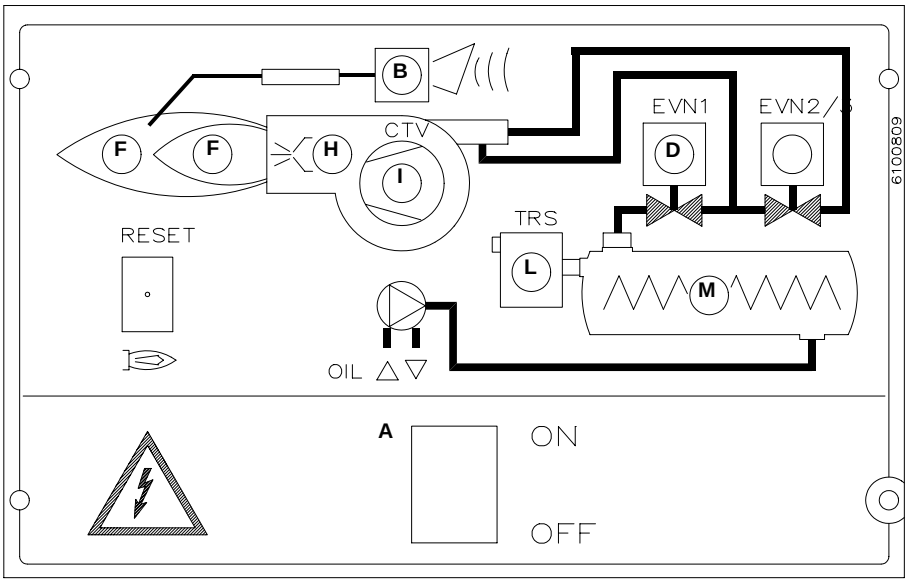

Legenda

A Main on/off switch
B Shut down indicator light
D Solenoid valve opening indicator light
F Maximum input operation indicator light
H Ignition transformer operation indicator light
I Thermal cutout tripped indicator light
L Resistors safety thermostat tripped indicator light
M Pre-heat resistor light

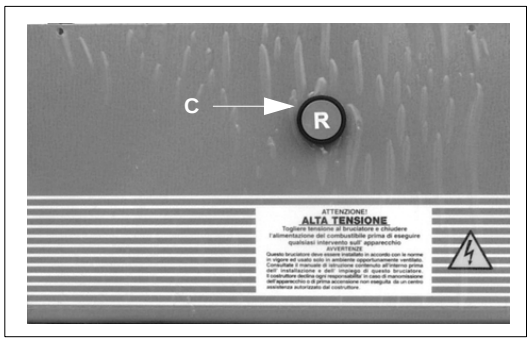

Fig. 15b - Flame control device reset button on burners PN30

PART III: MAINTENANCE MANUAL

Carry out the following maintenance operations at least once a year. If the boiler is used seasonally, maintenance should be carried out at the end of each heating season. If it is used continuously, maintenance should be carried out every six months.

N.B. All operations on the burner should be carried out with the main switch off.

PERIODIC OPERATIONS

- Clean and inspect the oil filter cartridge. Replace if necessary;
- inspect oil hoses; heck for possible leaks;
- clean and inspect filter inside oil pump;
- clean oil filter on pre-heating tank;
- remove, inspect and clean combustion head (see Fig. 16), When replacing, pay scrupulous attention to the measurements indicated on page 19;
- inspect ignition electrodes and ceramic insulators. Clean and adjust or replace as necessary (see page 19);
- remove and clean oil nozzles (important: clean with solvents only. Do not use metal implements). At the end of maintenance and after replacing the burner, light the flame and check the shape. If in doubt, replace faulty nozzle. If the burner is used intensively, you are recommended to replace the nozzle at the beginning of the operating season;
- inspect and thoroughly clean the flame detector photoresistor. Replace if necessary. If in doubt, when the burner is operational, check the detection circuit following the diagram in Fig. 19;

Removing the combustion head

- Remove cover C;
- remove the photoresistor from its housing;
- unscrew the rotating coupling on the oil hose (use two spanners to avoid loosening the coupling fixed to the distributor block);
- remove the complete assembly L as shown in the figure.

Note: to replace, follow the above operations in reverse order.

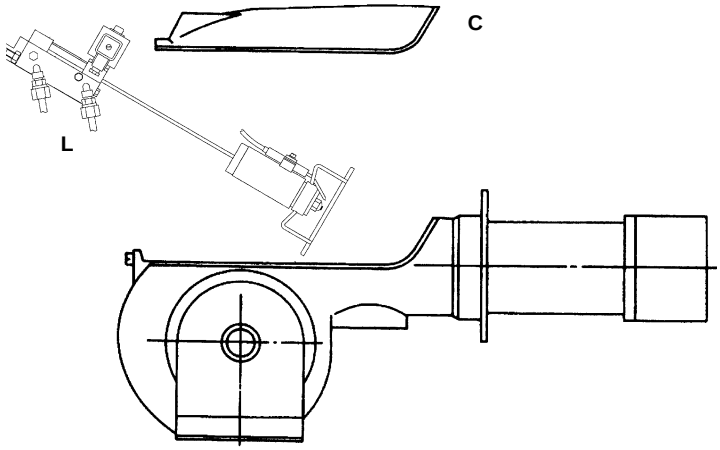

Fig. 16

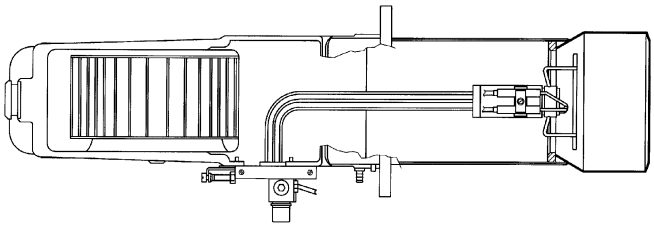

Fig. 17

Correct position of electrodes and combustion head

To guarantee efficient ignition, the measurements indicated in Fig. 18a - Fig. 18b must be respected. Make sure the electrode locking screw is tight before replacing the combustion head.

Fig. 18a
Electrodes correct position

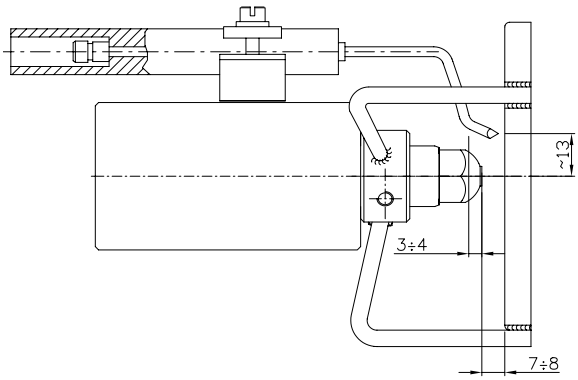

Fig. 18c

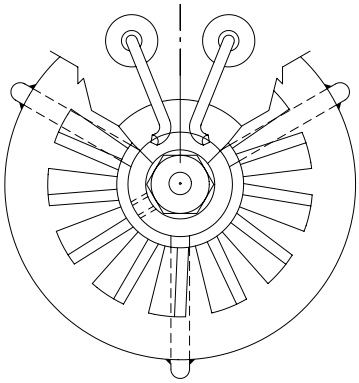

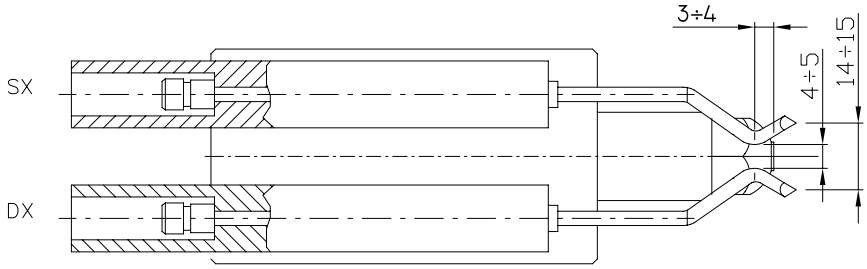

Fig. 18b

Checking detection current

To measure the detection signal, follow the diagram in Fig. 19.

If the signal is not within the range indicated, check the electrical contacts, cleanliness of the combustion head and position of the photoresistor. If necessary, replace the photoresistor.

Minimum current intensity with flame: 65 µA	65 µA
Maximum current intensity without flame: 5 µA	5 µA
Maximum current intensity possible with flame: 200 µA	200 µA

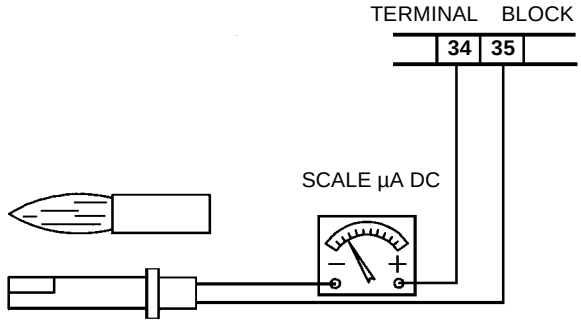

Fig. 19

TROUBLESHOOTING

	DOES NOT START UP	CONTINUES PRE-PURGUE	BURNER STARTS UP WITH COLD OIL	DOES NOT IGNITE AND GOES TO SHUT DOWN	GOES TO SHUT DOWN DURING OPERATION	GOES OFF AND REPEATS THE CYCLE DURING OPERATION
MAIN SWITCH OPEN	●					
LINE FUSES BLOWN	●					
MAXIMUM THERMOSTAT MALFUNCTION	●					
FAN THERMAL CUTOUT TRIPPED	●					
AUXILIARY FUSE BLOWN	●					
OIL RESISTOR FAULTY	●		●			
OIL ENABLING THERMOSTAT TRIPPED	●		●			
CONTROL UNIT MALFUNCTION	●	●		●	●	●
PLANT ENABLING THERMOSTAT		●				
SMOKY FLAME					●	●
IGNITION TRANSFORMER FAULTY				●		
IGNITION ELECTRODES WRONGLY POSITIONED				●		
DIRTY NOZZLE				●	●	
FAULTY OIL VALVE				●		●
FAULTY OR DIRTY PHOTORESISTOR						●
FAULTY RESISTOR THERMOSTAT	●					
LOW OIL PRESSURE				●	●	●
OIL FILTERS DIRTY				●	●	●
IGNITION ELECTRODE DIRTY				●		

ELECTRICAL DIAGRAM 04-649 - Complete key

BR	Pre-heating resistor contactor coil
BV	Fan motor contactor coil
CAV	Fan motor contactor auxiliary contacts
CO	Operating hour meter (optional)
CR	Pre-heat resistor contactor contacts
CTV	Fan motor thermal cutout contacts
CV	Fan motor contactor contacts
EVN1	Oil solenoid valve
F	Fuses
FR	Photoresistor
IG	Fan motor and auxiliary relays switch
IL	Auxiliary relays line switch
IR	Pre-heat resistor switch
IRA	Auxiliary resistors switch
L	Phase
LF	Burner operation indicator light
LB	Flame shutdown indicator light
LEVN1	Oil solenoid valve EVN1 opening indicator light
LEVN2/3	Oil solenoid valve EVN 2/3 opening indicator light
LMO24 (*)	Landis flame control device (only for burners with flow rate up to 60 Kg/h)
LOA24 (*)	Landis flame control device (only for burners with flow rate up to 60 Kg/h)
LRP	Pre-heat operation indicator light
LT	Burner thermal shutdown indicator light
LTA	Ignition transformer indicator light
LTRS	Pre-heat TRS shutdown indicator light
MA	Power terminal board
MC	Burner components connection terminal board
MV	Fan motor
N	Neutral
PS	Flame control unit reset button
RA	Auxiliary resistors
RP	Pre-heat resistors
ST	Series of thermostats or pressure switches
STA6B2.41	Berger air damper servo control
STA4.5B0.37/63N21L (*)	Berger air damper servocontrol (only for burners with flow rate < 60 Kg/h
STA6B2.41/62N21L (*)	Berger air damper servocontrol (only for burners with flow rate < 60 Kg/h
STA6B3.41/63N21L (*)	Berger air damper servocontrol (alternate)
TA	Ignition transformer
TCI	Installation enabling thermostat
TCN	Pre-heater oil enabling thermostat
TR	Pre-heater resistor thermostat
TRS	Pre-heater resistor safety thermostat
TV	Fan motor thermal cutout

NOTE:

You are recommended to perform external power supply connections in such a way that if the IG switches are turned off, the burner shuts down, interrupting the single phase power supply.

WARNING:

1 - Electrical supply 400V 50Hz 3N a.c.
2 - Do not reverse phase with neutral
3 - Ensure burner is properly earthed

ELECTRICAL DIAGRAM 04-649

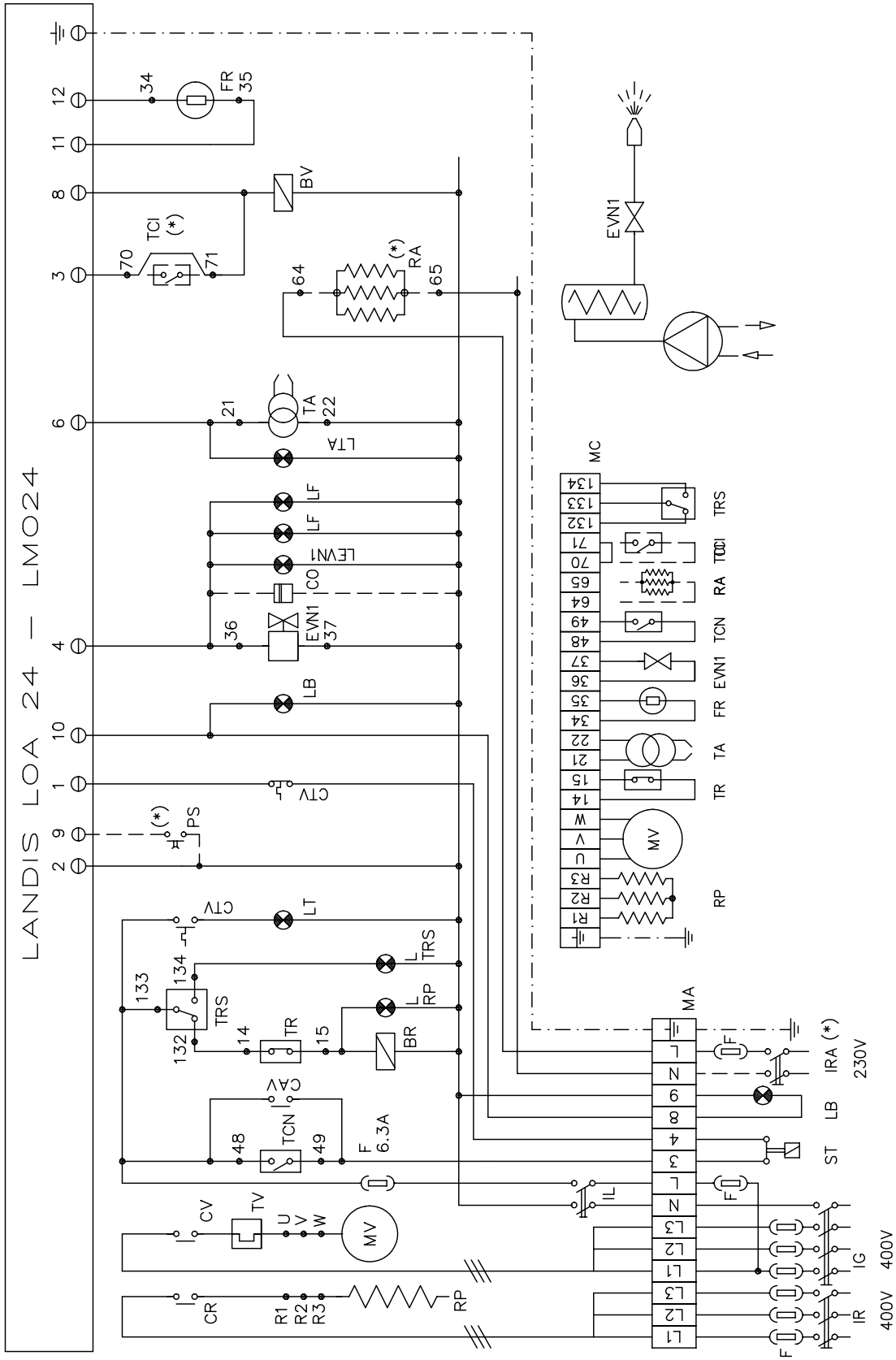

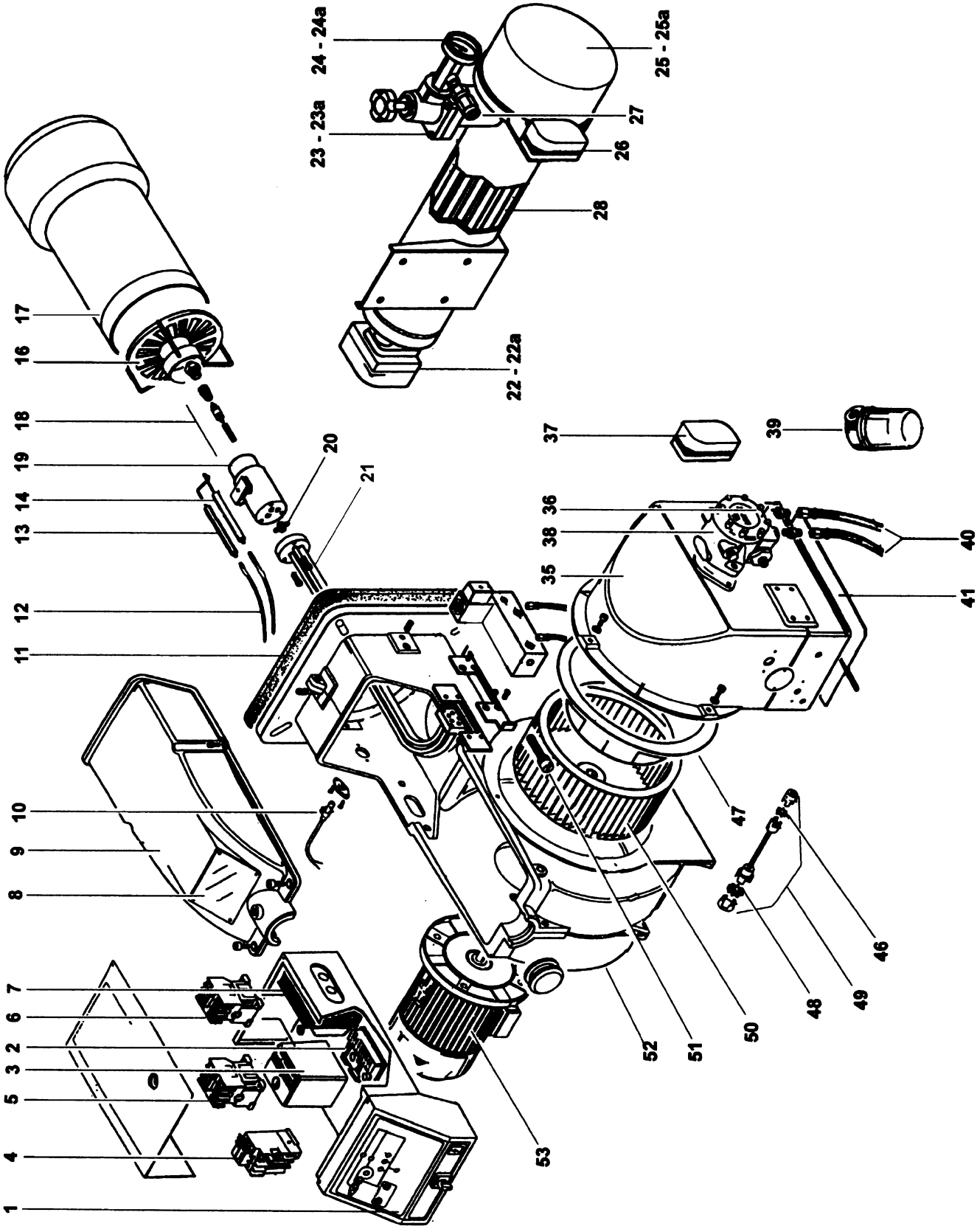
24 - 24a
25 - 25a
23 - 23a
27
26
28
22 - 22a
17
16
18
19
14
13
12
11
10
9
8
7
6
2
3
5
4
1
20
21
37
39
36
38
35
40
41
47
46
48
49
50
51
52
53

	DESCRIPTION	PN30
1	ELECTRICAL SWITCHBOARD	659.03....
2	CONTROL UNIT TERMINAL BOARD	2030409
3	CONTROL UNIT	2020445
4	FAN MOTOR THERMAL CUTOUT	6140001
5	FAN MOTOR CONTACTOR	6130001
6	RESISTOR CONTACTOR	6130001
7	IGNITION TRANSFORMER	2170005
8	INSPECTION GLASS	2420002
9	COVER	2210103
10	LANDIS PHOTORESISTOR	2510003
11	GASKET	2110004
12	IGNITION CABLE	6050129
13	LONG ELECTRODE	2080206
14	SHORT ELECTRODE	2080205
15	NOZZLE	261..
16	COMBUSTION HEAD	3060173
17	STANDARD BLAST TUBE	3090033
17	LONG BLAST TUBE	3090035
18	PISTON AND SPRING KIT	2370020
19	NOZZLE HOLDER WITH PISTONS	3020084
20	“O” RING 2021	2250033
21	TUBE ASSEMBLY FOR STANDARD BLAST TUBE	2860123
21	TUBE ASSEMBLY FOR LONG BLAST TUBE	2860124
22	BI-THERMOSTAT (TRS + TCN)	2560002
22a	BI-THERMOSTAT SHEATH	3160001
23	SELF-CLEANING PRE-HEATER FILTER (DENSE/ ENVIRONMENTALLY FRIENDLY OIL)	2090210
23	CARTRIDGE PRE-HEATER FILTER (FLUID OIL)	2090218
23a	PRE-HEATER FILTER GASKET	2110036
24	THERMOMETER	2450001
24a	THERMOMETER SHEATH	3160002
25	RESISTOR PROTECTION COVER	2210013
25a	RESISTOR "O" RING	2250004
26	RESISTOR THERMOSTAT TR	2560003
27	CHECK VALVE	2190627
28	OIL PRE-HEATER RESISTOR	6060011
34	CARTRIDGE RESISTOR 55 W	6060015
35	AIR INLET	2380104
36	CARTRIDGE RESISTOR 80w	6060010
37	INSTALLATION ENABLING THERMOSTAT TCI*	2560018
38	PUMP FOR FLUID OIL	2590104
38	PUMP FOR ENVIRONMENTALLY FRIENDLY/DENSE OIL	25901A2
39	FILTER FOR ENVIRONMENTALLY FRIENDLY/DENSE OIL	2090207
39	FILTER FOR FLUID OIL	2090202
40	HOSES FOR FLUID OIL	2340003
40	HOSES FOR ENVIRONMENTALLY FRIENDLY/DENSE OIL	2340004
41	AIR DAMPER	2140005
46	RING FOR PUMP SIDE JUNCTION	2540113
47	AIR DUCT	2040001
48	RING FOR FAN SIDE JUNCTION	2540113
49	COMPLETE JUNCTION	2540111
50	FAN	2150006
51	HEAD/NOZZLE HOLDER REGULATION SCREW	2320026
53	ELECTRIC MOTOR	2180008

APPENDIX - TECHNICAL CHARACTERISTICS

LANDIS LIGHT OIL BURNERS AUTOMATIC CONTROLLER LOA24 **27**

LANDIS OIL BURNERS AUTOMATIC CONTROLLER LOA44 **29**

SUNTEC PUMPS E SERIE **31**

LANDIS LIGHT OIL BURNERS AUTOMATIC CONTROLLER LOA24

Use

LOA... safety devices are intended for use solely with QRB... photoresistors, for lighting and controlling low capacity forced air light oil burners with max. capacity 30 kg/h in accordance with standard DIN 4787.

The One or two flamess are lit through electrical connections with or without post-ignition.

To replace LAI... AND LAB.. WITH LOA...

LOA... models can be used as replacement for LAI... and LAB.. controllers by means of the adapter KF8819 and without the need to change the electrical wiring. Because the LOA is smaller in dimensions, when it is used with the adapter the external dimensions are almost identical, which means that there is no need to move the reset button.

Performance

The controllers just need plugging in, so they can be mounted in almost any position: on the burner, on the electrical panel or on the control panel. The casing is made of robust heat-resistant plastic and contains:

- the thermic programmer operating a multiple switch control system with ambient temperature compensator
- flame signal amplifier with flame relay
- warning light indicating lockout and associated sealed reset button.

The plug-in socket, also made of robust heat-resistant plastic, contains the 12 terminals and also:

- 3 neutral terminals, ready wired up to terminal 2
- 4 earth terminals for earthing the burner
- 2 supplementary terminals numbered “31” and “32”.

The socket has two openings at the bottom for the leads; 5 others with threaded connection for cable holders PG11 or 3/4UNP for non-metallic sleeves are located on a mobile stuffing box, one on either side and 3 on the front.

There are two flexible metal tongues on the sides of the socket for mounting.

To dismantle it only requires gentle pressure with a screw driver in the slot of the mounting guide. The base dimensions of the socket are exaclty the same as for types LAB/LAI and there is no difference in the diameter of the reset button, the two mounting screws and the flange of the burner earth.

Safety at low voltage levels

Safety devices against any reduction in the mains voltage operate on a special electronic circuit which, in the event of the power supply falling below 165V~, stops the burner switching on without releasing the fuel and locks out the apparatus.

Wiring diagram of the programme

To ensure correct wiring it is essential to observe local standards and follow the instructions of the burner manufacturer with regard to assembly and start-up.

Program's legend:

Controller output signals

Required input signals

A’ Burner start up with light oil pre-heater OH

A Burner start-up without light oil pre-heater

B Flame lit

C Normal operation

D Normal stop through R

tw Oil pre-heating time until operational all clear given through contact OW

tl Pre-purge time

t3 Pre-ignition time

t2 Safety time

t3n Post-ignition time

t4 Interval between the flame lighting and energising of solenoid 2a at terminal 5

Internal layout

AL Optical alarm

BV. Fuel valve

EK Reset button

FR Flame relay

fr Flame relay contacts

FS Flame alight signal

G Burner motor

K Flame relay anchor to delay the tzl command in the event of a premature flame signal or endorse it where the signal is correct.

OH light oil pre-heater

OW Operational all-clear contact

QRB Photo-resistant cell (flame detector)

R Thermostat or pressure switch

TZ Thermo-electric programmer (bimetal system)

tz.. TZ contacts

V Flame signal amplifier

W Safety thermostat or pressure switch

Z Ignition transformer

The above are safety devices!

To tamper with them in any way may have unforeseeable consequences!

Do not open them!

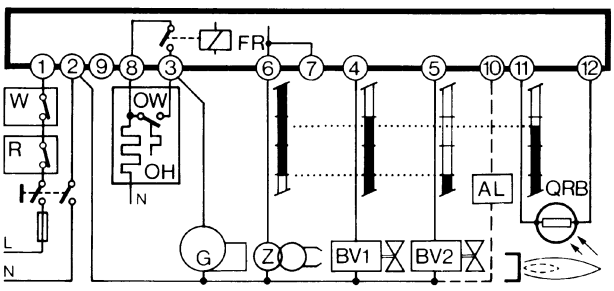

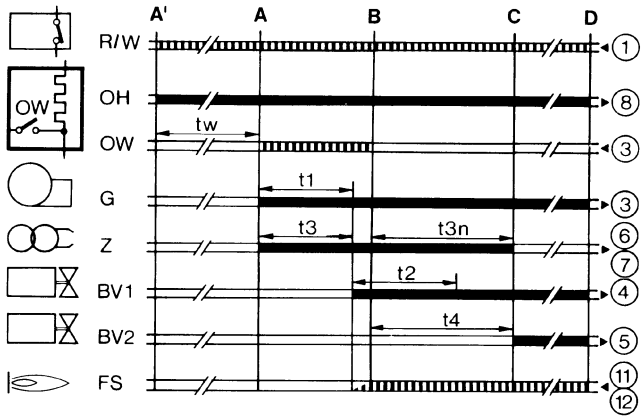

Technical characteristics

Voltage	220V -15%..240V+10% or 100V -15%...110V+10%
Frequency	50...60Hz +/- 6%
External fuse	max.10A slow action
Contact flow:	
- terminal 1	5A
- terminal 3	5A (incl.capacity absorbed by motor and pre-heater)
Terminal flow:	
terminals 4, 5 &10	1A
terminals 6&7	2A
terminal 8	5A
Absorbed cap	3VA
Protection	IP40
Premitted temp:	
operational	-20...+60°C
transport & storage	-50...+60°C
Emplacement	any
Mass (weight)	controller 180g, socket 50g, AGK accessories 12 g.

Commands in the event of operational interference

Stray light/premature ignition

During pre-purge and/or pre-ignition there should be no flamesignal. If there is a flame signal, eg from premature ignition due to a faulty solenoid, external light, short circuit in the photoresisto or wiring, malfunction in the flame signal amplifier, etc., at the end of pre-purge and safety time the controller locks out the burner and stops the fuel flow even during safety time.

Absence of flame

If there is no flame at the end of safety time the controller locks out immediately.

Absence of flame during operation

If there is no flame during operation the controller cuts off the supply of fuel and automatically initiates a fresh start-up programme: at the end of t4 the start-up programme ends.

Whenever there is a safety stop, terminals 3-8 and 11 are de-energised in less than 1 second; at the same time a remote lockout signal is transmitted through terminal 10. The controller can be reset after c. 50 seconds.

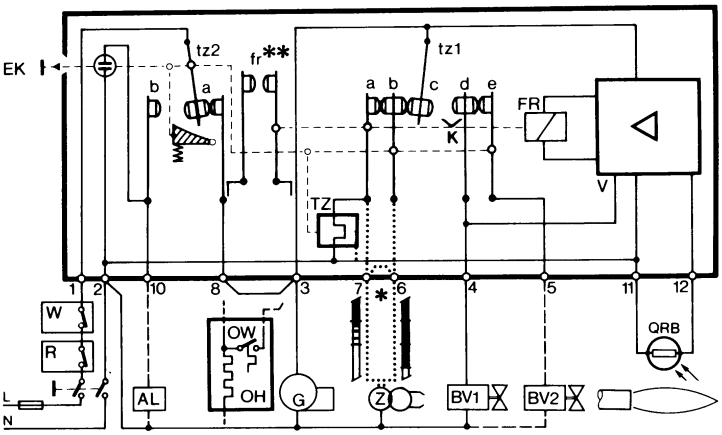

LANDIS OIL BURNERS AUTOMATIC CONTROLLER LOA44

Operation

Burners without fuel pre-heater

Start-up, thermostat and pressure switches R, burner motor G and ignition transformer Z are all controlled at the same time.

After about 25 seconds the solenoid is energised (in this period the flame amplifier is at maximum sensitivity). The command to the first solenoid BV1 marks the start of the safety time during which, either there is no flame in the burner and the controller locks it out, or after 5 seconds the stage 2 solenoid BV2 is energised and this ends the burner start-up programme.

Burners with fuel pre-heater

(Operational all-clear from contact OW which short circuits terminals 3 and 8). The burner start-up programme is exactly the same as above except that it is initiated by the closing of the OW contact of the preheater OH.

When the flame lights the flame relay contact (fr2) is short circuited and should the contact OW open that does not cause a lockout but a repetition of the cycle.

Commands in the event of operational interference

Premature ignition / Flame present during pre-purge: Lockout and termination of pre-purge

Defective components in controller or electronic programmer: Lockout

No flame signal at the end of safety time: Lockout

No flame during post-ignition: Lockout

No flame during normal operation: Repetition of start-up programme

Power cut during start-up programme or operation: Automatic repetition of programme when power restored.

Lack of sufficient power (~160V): Solenoid BV1 de-energised, solenoid BV2 de-energised when flame goes out

Lockout which occurs within less than 1 second, cuts off power to terminals 3-8 and 12; terminal 10 still remains live in order to activate the optical lockout indicator. The controller can be reset 2 seconds after a lockout.

Important: when external wiring is replaced ensure that it is switched on at the same phase of terminal 2 (so that terminal 9 is connected up to neutral).

Electrical connections and programmer's layout

A' burner start-up

B Flame signal with oil pre-heater present

C End of programme-start of normal operation

A burner start-up

C-D normal operation without oil pre- heater

D normal stop

Programme or command cycle

tw fuel pre-heating time acc. to system

tl pre-purge time, ~25secs.

t3 pre-ignition time, ~25secs.

t2 safety time max.5 secs.

t3n post-ignition time, ~2 secs.

t4 interval between BV1 and BV2 commands, ~5 secs* - lockout from absence of flame, <1 sec.

* In relation to the moment when the flame occurs.

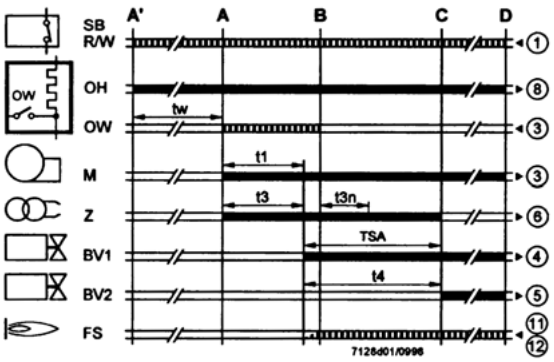

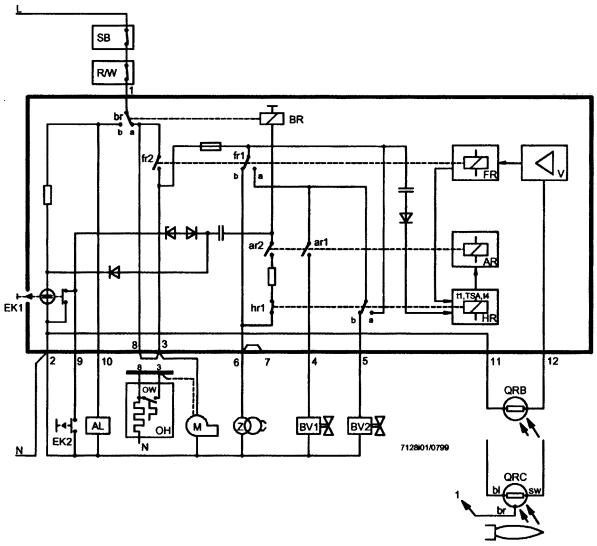

Key to internal diagram

AL Remote optical lockout indicator

AR Main relay with contacts ar...

BV.. Fuel solenoid

BR Lockout relay with contacts br..

EK Reset button

FR Flame relay with contacts fr...

FS Flame present signal

G Burner motor

HR Auxiliary relay with contacts hr..

L Lockout LED incorporated in the reset button

OH Fuel pre-heater

OW All-clear contact for pre-heater

QRB Photo resistor (flame detector)

R Normal thermostat or pressure switch

V Flame signal amplifier

W Safety thermostat or pressure switch

Z Safety transformer

Technical characteristics

Voltage	220V-15%..240V+10% or 100V-15%..110V+10%
Frequency	50...60Hz _6%
External fuse	max.10 A, slow action
Contact flow:	
terminal 1	max. 5A
terminal 3	5A (incl. consumed cap. of motor and pre-heater)
terminals 4,5& 6	max.2A
terminal 8	max. 5A
terminal 10	max.1A
Permitted temperature	
operation	-20...+60°C
storage and transport	-50...+40°C
Protection	IP40
Mass (weight) controller/socket	140g/80g,
AGK accessories	~12g

SUNTEC PUMPS E SERIE

The SUNTEC oil pumps incorporate a pressure regulating valve with cut-off function. The E pumps can also be used with heavy oil.

The gear set draws oil from the tank through the built-in filter and transfers it to the valve that regulates the oil pressure to the nozzle line. All oil which does not go through the nozzle line will be dumped through the valve back to the return line, in two pipe installation or, if it is a one-pipe installation, back to the suction port in the gear-set (in that case, the by-pass plug must be removed from the return port, and the return port sealed by steel plug and washer).

The valve also has a cut-off function as follows: during starting period when the gear-set speed is increasing, all the oil passes through a special flat on the piston, back to the return.

Once the speed reaches a certain value and the flow can no longer pass through this flat, then the pressure increases rapidly overcoming the valve spring force and opens the valve. During the stop sequence, the gear-set speed slows down and the valve closes when the gear-set capacity is lower than the flat flow. The cut-on and cut-off speeds depend on the gear-set size, and set pressure.

Bleed

Bleeding in two pipe operation is automatic, but it could be accelerated by loosening the plug in a pressure gauge port. In one pipe operation, a pressure port must be opened to bleed the system.

Technical data

Connection threads	Cylindrical according to ISO 228/1
Inlet and return	G 1/2"
Nozzle outlet	G 1/4"
Pressure gauge port	G 1/8"
Vacuum gauge port	G 1/2"
Valve function	Pressure regulating and cut-off.
Strainer Open area	45 cm ²
Opening size	C = 170 µm N = 550 µm
Shaft	Ø 11mm according to EN 225.
By-pass plug Inserted in return port for 2 pipe system; to be removed with a 3/16" Allen key for 1 pipe system.	
Weight	4 kg

Hydraulic data

Nozzle pressure range	14 - 30 bar
Delivery pressure setting	20 bar
Operating viscosity	2,8 - 450 cSt
Oil temperature	0 - 90°C in the pump.
Inlet pressure	1,5 bar max.
Return pressure	1,5 bar max.
Suction height	0,45 bar max. vacuum to prevent air separation from oil.
Rated speed	3600 rpm max.

Key

A	Oil under suction
B	Oil under pressure
C	By-passed oil returned to tank or to suction
1	Suction
2	Vacuum gauge port
3	Gear set
4	Shaft seal
5	Pressure adjustment
6	By-pas plug inserted
7	Return
8	Pressure gauge port
9	To nozzle
10	Back to suction
11	Return plugged

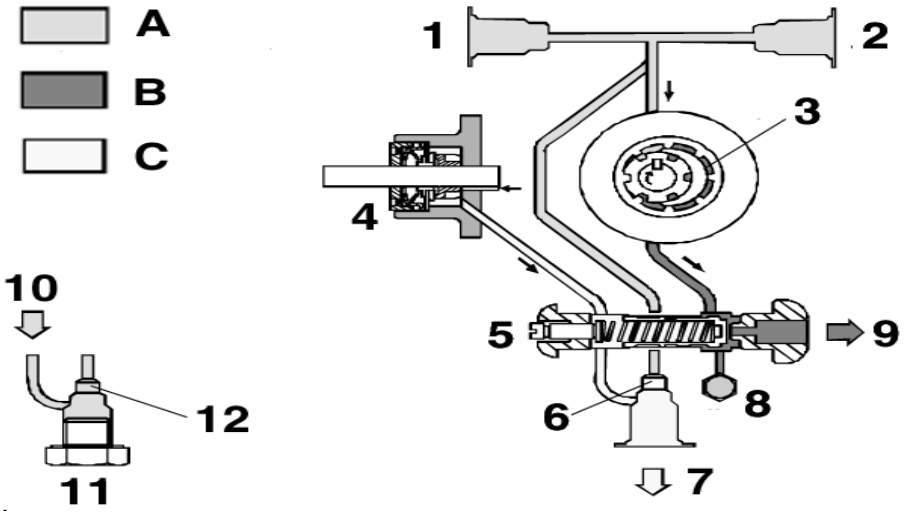

Single pipe installation **Twin pipe installation**

CIB UNIGAS

Via C. Colombo, 9 - 35011 Campodarsego (PD) Italy
Tel. +39-049-9200944 - Fax +39-049-9200945/9201269
Internet: www.cibunigas.it - E mail: cibunigas@cibunigas.it

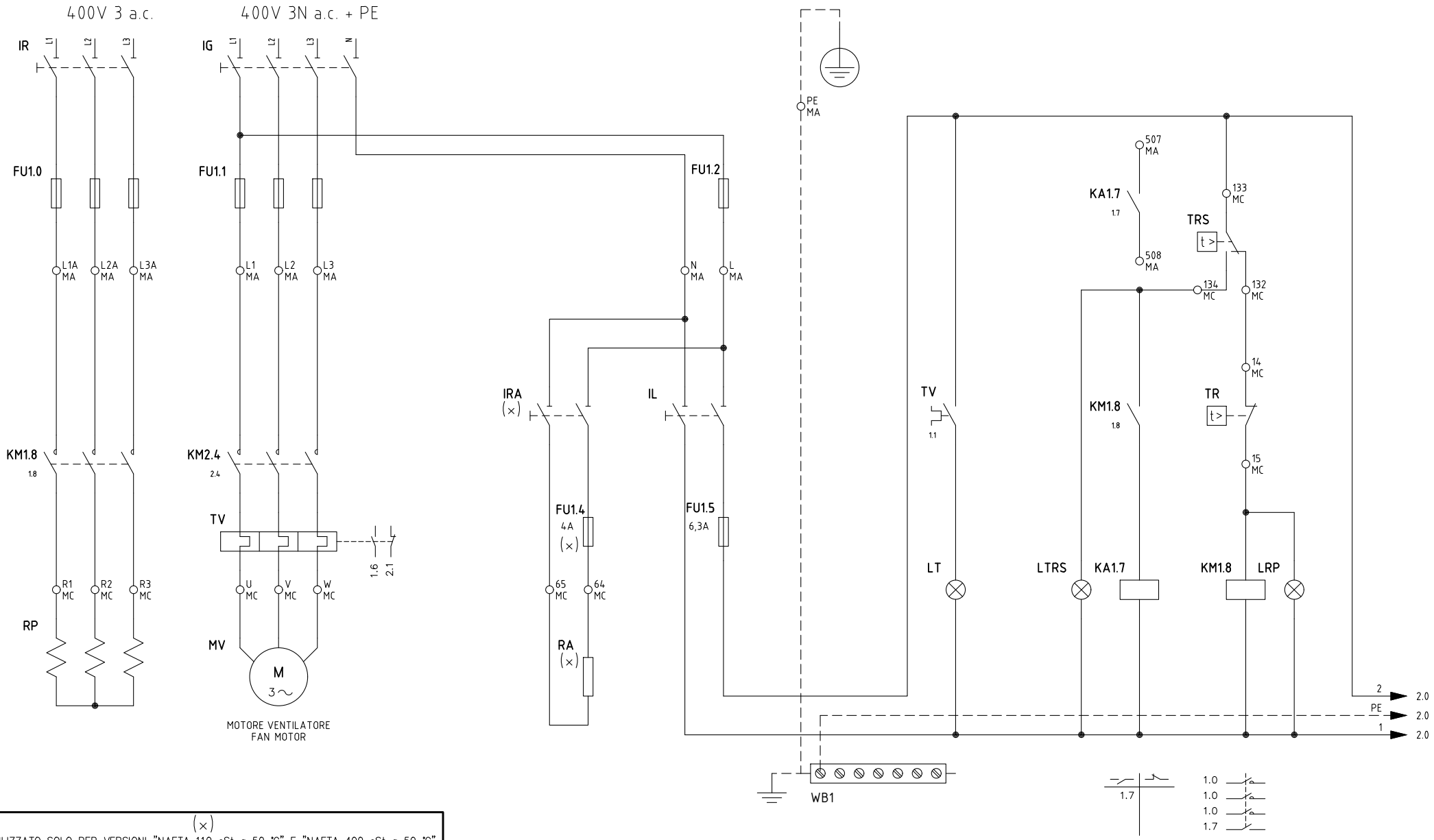

(×)
UTILIZZATO SOLO PER VERSIONI "NAFTA 110 cSt a 50 °C" E "NAFTA 400 cSt a 50 °C"
USED FOR "OIL 110 cSt a 50 °C " AND "OIL400 cSt a 50 °C " VERSIONS ONLY

REV.	MODIFICA	DATA	FIRME
03	UPDATE WITH "QRB4" FLAME DETECTOR	03/08/20	U. PINTON
02	FREE CONTACT HEATERS ADDED	11/01/07	U. PINTON
01	AUXILIARY HEATERS SWITCH ADDED	27/01/04	U. PINTON

UNIGAS

Impianto
TIPO/TYPE PN30
MODELLO/MODEL x–.TN.x.xx.A

Descrizione

Ordine

Commessa

Esecutore U. PINTON

Data Controllato 03/08/2020

Controllato M. MASCHIO

Data 08/03/2001

Revisione 03

Dis. N. 04 – 0649

PREC. /

FOGLIO 1

SEGUE 2

TOTALE 4

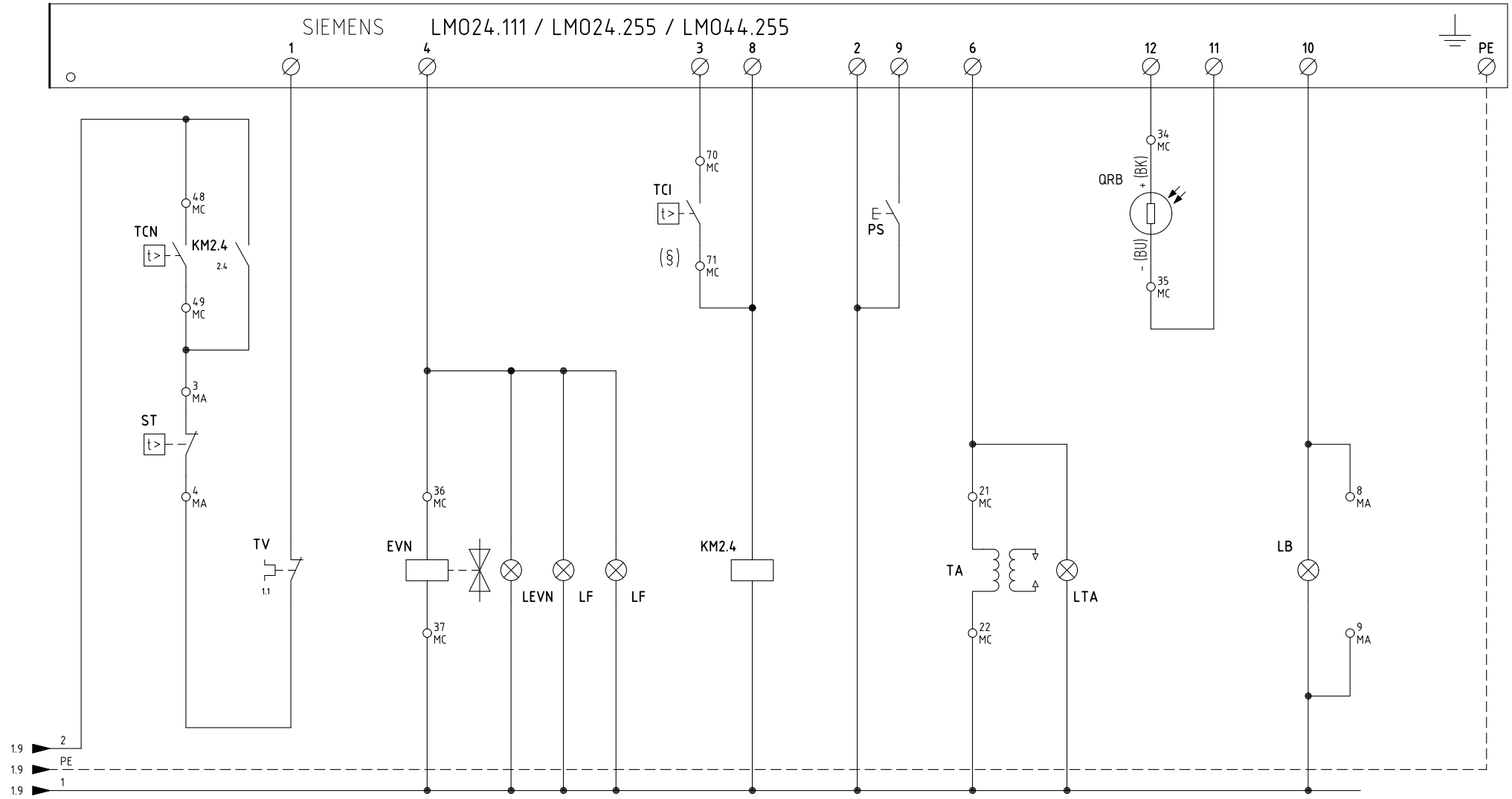

(§)
INSTALLATO SOLO SU ALCUNE VERSIONI
INSTALLED ON ANY VERSIONS ONLY

Data 08/03/2001		PREC.	FOGLIO
Revisione 03		1	2
Dis. N. 04 – 0649		SEGUE	TOTALE
		3	4

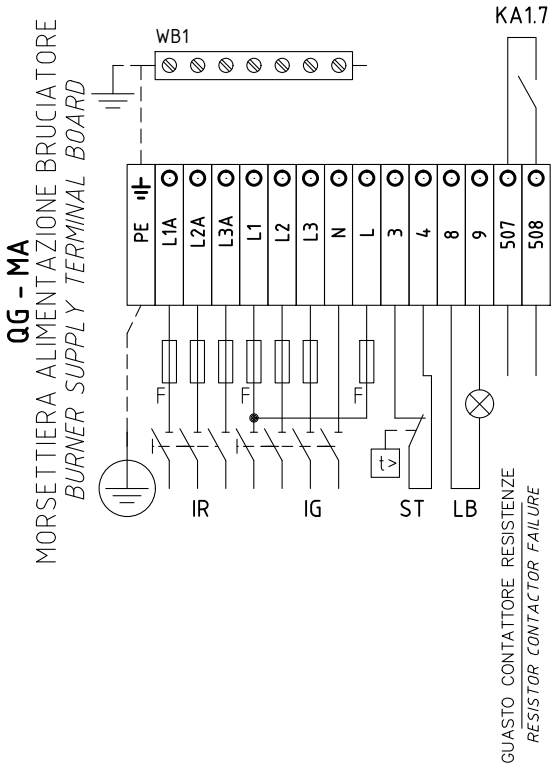

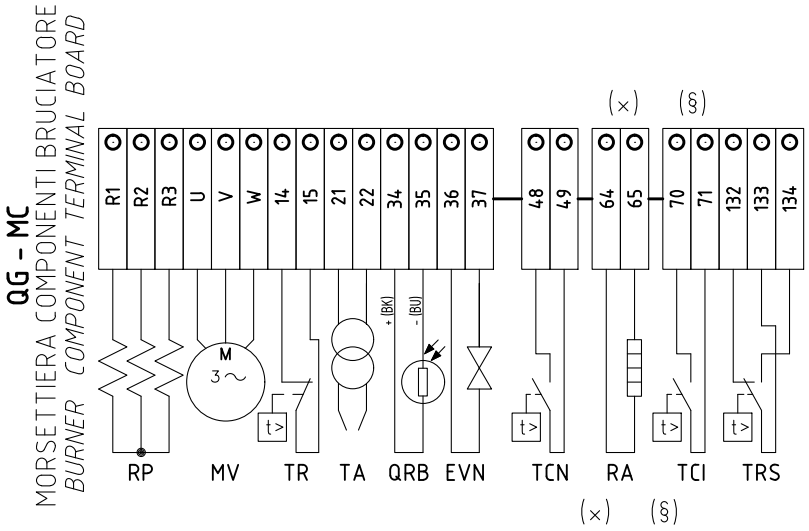

(x)
UTILIZZATO SOLO PER VERSIONI "NAFTA 110 cSt a 50 °C" E "NAFTA 400 cSt a 50 °C"
USED FOR "OIL 110 cSt a 50 °C " AND "OIL400 cSt a 50 °C " VERSIONS ONLY

(§)
INSTALLATO SOLO SU ALCUNE VERSIONI
INSTALLED ON ANY VERSIONS ONLY

Data 08/03/2001		PREC.	FOGLIO
Revisione 03		2	3
Dis. N. 04 – 0649		SEGUE	TOTALE
		4	4

	Sigla/Item	Foglio/Sheet	Funzione	Function
	EVN	2	ELETTROVALVOLA NAFTA I° STADIO	OIL SOLENOID VALVE 1st STAGE
	FU1.0	1	FUSIBILI LINEA PRERISCALDATORE RP	LINE PRE-HEATING RP FUSES
	FU1.1	1	FUSIBILI LINEA BRUCIATORE	BURNER LINE FUSES
	FU1.2	1	FUSIBILE LINEA AUSILIARI	AUXILIARY LINE FUSE
(x)	FU1.4	1	FUSIBILE RESISTENZE AUSILIARIE	AUXILIARY HEATERS FUSE
	FU1.5	1	FUSIBILE AUSILIARIO	AUXILIARY FUSE
	IG	1	INTERRUTTORE GENERALE	MAINS SWITCH
	IL	1	INTERRUTTORE LINEA AUSILIARI	AUXILIARY LINE SWITCH
	IR	1	INTERRUTTORE LINEA RESISTENZE PRERISCALDATORE	PRE-HEATING RESISTOR LINE SWITCH
(x)	IRA	1	INTERRUTTORE RESISTENZE AUSILIARIE	AUXILIARY HEATERS SWITCH
	KA1.7	1	RELE' AUSILIARIO SEGNALAZIONE GUASTO CONTATTORE RESISTENZE	AUXILIARY RELAY FOR RESISTOR CONTACTOR FAILURE
	KM1.8	1	CONTATTORE RESISTENZE PRERISCALDATORE [RP]	PRE-HEATING RESISTOR [RP] CONTACTOR
	KM2.4	2	CONTATTORE MOTORE VENTILATORE	FAN MOTOR CONTACTOR
	LB	2	LAMPADA SEGNALAZIONE BLOCCO BRUCIATORE	INDICATOR LIGHT FOR BURNER LOCK-OUT
	LEVN	2	LAMPADA SEGNALAZIONE APERTURA [EVN1]	INDICATOR LIGHT FOR OPENING OF ELECTRO-VALVE [EVN1]
	LF	2	LAMPADA SEGNALAZIONE FUNZIONAMENTO BRUCIATORE	BURNER IN LOW FLAME INDICATOR LIGHT
	LF	2	LAMPADA SEGNALAZIONE FUNZIONAMENTO BRUCIATORE	BURNER IN LOW FLAME INDICATOR LIGHT
	LMO24.111 / LMO24.255 / LMO44.255	2	APPARECCHIATURA CONTROLLO FIAMMA	CONTROL BOX
	LRP	1	LAMPADA SEGNALAZIONE FUNZIONAMENTO PRERISCALDATORE [RP]	INDICATOR LIGHT FOR PRE-HEATING RESISTOR [RP] OPERATION
	LT	1	LAMPADA SEGNALAZIONE BLOCCO TERMICO MOTORE VENTILATORE	INDICATOR LIGHT FOR FAN MOTOR OVERLOAD THERMAL CUTOUT
	LTA	2	LAMPADA SEGNALAZIONE TRASFORMATORE DI ACCENSIONE	IGNITION TRANSFORMER INDICATOR LIGHT
	LTRS	1	LAMPADA SEGNALAZIONE BLOCCO TERMOSTATO DI SICUREZZA PRERISCALDATORE [RP]	INDICATOR LIGHT FOR SAFETY THERMOSTAT [RP] PRE-HEATING
	MV	1	MOTORE VENTILATORE	FAN MOTOR
	PS	2	PULSANTE SBLOCCO FIAMMA	FLAME UNLOCK BUTTON
	QRB	2	SONDA RILEVAZIONE FIAMMA	FLAME DETECTOR PROBE
(x)	RA	1	RESISTENZE AUSILIARIE	AUXILIARY HEATERS
	RP	1	RESISTENZE PRERISCALDATORE NAFTA	PRE-HEATING TANK RESISTORS
	ST	2	SERIE TERMOSTATI/PRESSOSTATI	SERIES OF THERMOSTATS OR PRESSURE SWITCHES
	TA	2	TRASFORMATORE DI ACCENSIONE	IGNITION TRANSFORMER
(§)	TCI	2	TERMOSTATO CONSENSO IMPIANTO	PLANT CONSENT THERMOSTAT
	TCN	2	TERMOSTATO CONSENSO NAFTA	OIL CONSENT THERMOSTAT
	TR	1	TERMOSTATO DI REGOLAZIONE PRERISCALDATORE [RP]	REGULATION THERMOSTAT FOR PRE-HEATING [RP] RESISTORS
	TRS	1	TERMOSTATO DI SICUREZZA PRERISCALDATORE [RP]	PRE-HEATING [RP] A SAFETY THERMOSTAT
	TV	1	TERMICO MOTORE VENTILATORE	FAN MOTOR THERMAL
	WB1	1	BARRA DI TERRA	EARTH TERMINAL

(x)
UTILIZZATO SOLO PER VERSIONI "NAFTA 110 cSt a 50 °C" E "NAFTA 400 cSt a 50 °C"
USED FOR "OIL 110 cSt a 50 °C " AND "OIL 400 cSt a 50 °C " VERSIONS ONLY

(§)
INSTALLATO SOLO SU ALCUNE VERSIONI
INSTALLED ON ANY VERSIONS ONLY

Data 08/03/2001	PREC.	FOGLIO
Revisione 03	3	4
Dis. N. 04 – 0649	SEGUE	TOTALE
	/	4