P20
P30
P45
P50
P65

Gas burners

MANUAL OF INSTALLATION - USE - MAINTENANCE

CIB UNIGAS

BURNERS - BRUCIATORI - BRULERS - BRENNER - QUEMADORES - ГОРЕЛКИ

M03975CF Rev. 0,0 12/21

DANGERS, WARNINGS AND NOTES OF CAUTION

THIS MANUAL IS SUPPLIED AS AN INTEGRAL AND ESSENTIAL PART OF THE PRODUCT AND MUST BE DELIVERED TO THE USER.

INFORMATION INCLUDED IN THIS SECTION ARE DEDICATED BOTH TO THE USER AND TO PERSONNEL FOLLOWING PRODUCT INSTALLATION AND MAINTENANCE.

THE USER WILL FIND FURTHER INFORMATION ABOUT OPERATING AND USE RESTRICTIONS, IN THE SECOND SECTION OF THIS MANUAL. WE HIGHLY RECOMMEND TO READ IT.

CAREFULLY KEEP THIS MANUAL FOR FUTURE REFERENCE.

1) GENERAL INTRODUCTION

- The equipment must be installed in compliance with the regulations in force, following the manufacturer's instructions, by qualified personnel.
- Qualified personnel means those having technical knowledge in the field of components for civil or industrial heating systems, sanitary hot water generation and particularly service centres authorised by the manufacturer.
- Improper installation may cause injury to people and animals, or damage to property, for which the manufacturer cannot be held liable.
- Remove all packaging material and inspect the equipment for integrity.

In case of any doubt, do not use the unit - contact the supplier.

The packaging materials (wooden crate, nails, fastening devices, plastic bags, foamed polystyrene, etc), should not be left within the reach of children, as they may prove harmful.

- Before any cleaning or servicing operation, disconnect the unit from the mains by turning the master switch OFF, and/or through the cut-out devices that are provided.
- Make sure that inlet or exhaust grilles are unobstructed.
- In case of breakdown and/or defective unit operation, disconnect the unit. Make no attempt to repair the unit or take any direct action.

Contact qualified personnel only.

Units shall be repaired exclusively by a servicing centre, duly authorised by the manufacturer, with original spare parts and accessories.

Failure to comply with the above instructions is likely to impair the unit's safety.

To ensure equipment efficiency and proper operation, it is essential that maintenance operations are performed by qualified personnel at regular intervals, following the manufacturer's instructions.

- When a decision is made to discontinue the use of the equipment, those parts likely to constitute sources of danger shall be made harmless.
- In case the equipment is to be sold or transferred to another user, or in case the original user should move and leave the unit behind, make sure that these instructions accompany the equipment at all times so that they can be consulted by the new owner and/or the installer.
- This unit shall be employed exclusively for the use for which it is meant. Any other use shall be considered as improper and, therefore, dangerous.

The manufacturer shall not be held liable, by agreement or otherwise, for damages resulting from improper installation, use and failure to comply with the instructions supplied by the manufacturer.The occurrence of any of the following circustances may cause explosions, polluting unburnt gases (example: carbon monoxide CO), burns, serious harm to people, animals and things:

- Failure to comply with one of the WARNINGS in this chapter
- Incorrect handling, installation, adjustment or maintenance of the burner
- Incorrect use of the burner or incorrect use of its parts or optional supply

2) SPECIAL INSTRUCTIONS FOR BURNERS

- The burner should be installed in a suitable room, with ventilation openings complying with the requirements of the regulations in force, and sufficient for good combustion.
- Only burners designed according to the regulations in force should be used.
- This burner should be employed exclusively for the use for which it was designed.
- Before connecting the burner, make sure that the unit rating is the same as delivery mains (electricity, gas oil, or other fuel).
- Observe caution with hot burner components. These are, usually, near to the flame and the fuel pre-heating system, they become hot during the unit operation and will remain hot for some time after the burner has stopped.

When the decision is made to discontinue the use of the burner, the user shall have qualified personnel carry out the following operations:

a Remove the power supply by disconnecting the power cord from the mains.

b Disconnect the fuel supply by means of the hand-operated shut-off valve and remove the control handwheels from their spindles.

Special warnings

- Make sure that the burner has, on installation, been firmly secured to the appliance, so that the flame is generated inside the appliance fire-box.
- Before the burner is started and, thereafter, at least once a year, have qualified personnel perform the following operations:

a set the burner fuel flow rate depending on the heat input of the appliance;

b set the flow rate of the combustion-supporting air to obtain a combustion efficiency level at least equal to the lower level required by the regulations in force;

c check the unit operation for proper combustion, to avoid any harmful or polluting unburnt gases in excess of the limits permitted by the regulations in force;

d make sure that control and safety devices are operating properly;

e make sure that exhaust ducts intended to discharge the products of combustion are operating properly;

f on completion of setting and adjustment operations, make sure that all mechanical locking devices of controls have been duly tightened;

g make sure that a copy of the burner use and maintenance instructions is available in the boiler room.

- In case of a burner shut-down, reser the control box by means of the RESET pushbutton. If a second shut-down takes place, call the Technical Service, **without trying to RESET further**.
- The unit shall be operated and serviced by qualified personnel only, in compliance with the regulations in force.

3) GENERAL INSTRUCTIONS DEPENDING ON FUEL USED

3a) ELECTRICAL CONNECTION

- For safety reasons the unit must be efficiently earthed and installed as required by current safety regulations.
- It is vital that all saftey requirements are met. In case of any doubt, ask for an accurate inspection of electrics by qualified personnel, since the manufacturer cannot be held liable for damages that may be caused by failure to correctly earth the equipment.
- Qualified personnel must inspect the system to make sure that it is adequate to take the maximum power used by the equipment shown on the equipment rating plate. In particular, make sure that the system cable cross section is adequate for the power absorbed by the unit.
- No adaptors, multiple outlet sockets and/or extension cables are permitted to connect the unit to the electric mains.
- An omnipolar switch shall be provided for connection to mains, as required by the current safety regulations.
- The use of any power-operated component implies observance of a few basic rules, for example:
  -do not touch the unit with wet or damp parts of the body and/or with bare feet;
  - do not pull electric cables;
  - do not leave the equipment exposed to weather (rain, sun, etc.) unless expressly required to do so;
  - do not allow children or inexperienced persons to use equipment;
- The unit input cable shall not be replaced by the user.
  In case of damage to the cable, switch off the unit and contact qualified personnel to replace.
  When the unit is out of use for some time the electric switch supplying all the power-driven components in the system (i.e. pumps, burner, etc.) should be switched off.

3b) FIRING WITH GAS, LIGHT OIL OR OTHER FUELS

GENERAL

- The burner shall be installed by qualified personnel and in compliance with regulations and provisions in force; wrong installation can cause injuries to people and animals, or damage to property, for which the manufacturer cannot be held liable.
- Before installation, it is recommended that all the fuel supply system pipes be carefully cleaned inside, to remove foreign matter that might impair the burner operation.
- Before the burner is commissioned, qualified personnel should inspect the following:

a the fuel supply system, for proper sealing;
b the fuel flow rate, to make sure that it has been set based on the firing rate required of the burner;
c the burner firing system, to make sure that it is supplied for the designed fuel type;
d the fuel supply pressure, to make sure that it is included in the range shown on the rating plate;
e the fuel supply system, to make sure that the system dimensions are adequate to the burner firing rate, and that the system is equipped with all the safety and control devices required by the regulations in force.

- When the burner is to remain idle for some time, the fuel supply tap or taps should be closed.

SPECIAL INSTRUCTIONS FOR USING GAS

Have qualified personnel inspect the installation to ensure that:

a the gas delivery line and train are in compliance with the regulations and provisions in force;
b all gas connections are tight;
c the boiler room ventilation openings are such that they ensure the air supply flow required by the current regulations, and in any case are sufficient for proper combustion.

- Do not use gas pipes to earth electrical equipment.
- Never leave the burner connected when not in use. Always shut the gas valve off.
- In case of prolonged absence of the user, the main gas delivery valve to the burner should be shut off.

Precautions if you can smell gas

a do not operate electric switches, the telephone, or any other item likely to generate sparks;
b immediately open doors and windows to create an air flow to purge the room;
c close the gas valves;
d contact qualified personnel.

- Do not obstruct the ventilation openings of the room where gas appliances are installed, to avoid dangerous conditions such as the development of toxic or explosive mixtures.

DIRECTIVES AND STANDARDS

Gas burners

European directives

-Regulation 2016/426/UE (appliances burning gaseous fuels)
-2014/35/UE (Low Tension Directive)
-2014/30/UE (Electromagnetic compatibility Directive)
-2006/42/EC (Machinery Directive)

Harmonized standards

-UNI EN 676 (Automatic forced draught burners for gaseous fuels)
-EN 55014-1 (Electromagnetic compatibility- Requirements for house hold appliances, electric tools and similar apparatus)
-EN 60204-1:2006 (Safety of machinery – Electrical equipment of machines.)
-CEI EN 60335-1 (Specification for safety of household and similar electrical appliances);
-CEI EN 60335-2-102 (Household and similar electrical appliances. Safety. Particular requirements for gas, oil and solid-fuel burning appliances having electrical connections).
-UNI EN ISO 12100:2010 (Safety of machinery - General principles for design - Risk assessment and risk reduction);

Light oil burners

European directives

-2014/35/UE (Low Tension Directive)
-2014/30/UE (Electromagnetic compatibility Directive)
-2006/42/EC (Machinery Directive)

Harmonized standards

-UNI EN 267-2011(Automatic forced draught burners for liquid fuels)
-EN 55014-1 (Electromagnetic compatibility- Requirements for house hold appliances, electric tools and similar apparatus)
-EN 60204-1:2006 (Safety of machinery – Electrical equipment of machines.)
-CEI EN 60335-1 (Specification for safety of household and similar electrical appliances);
-CEI EN 60335-2-102 (Household and similar electrical appliances. Safety. Particular requirements for gas, oil and solid-fuel burning appliances having electrical connections).
-UNI EN ISO 12100:2010 (Safety of machinery - General principles for design - Risk assessment and risk reduction);

Heavy oil burners

European Directives

-2014/35/UE (Low Tension Directive)
-2014/30/UE (Electromagnetic compatibility Directive)
-2006/42/EC (Machinery Directive)

Harmonized standards

-UNI EN 267(Automatic forced draught burners for liquid fuels)
-EN 55014-1 (Electromagnetic compatibility- Requirements for house hold appliances, electric tools and similar apparatus)
-EN 60204-1:2006 (Safety of machinery – Electrical equipment of machines.)
-CEI EN 60335-1 (Specification for safety of household and similar electrical appliances);
-CEI EN 60335-2-102 (Household and similar electrical appliances. Safety. Particular requirements for gas, oil and solid-fuel burning appliances having electrical connections).
-UNI EN ISO 12100:2010 (Safety of machinery - General principles for design - Risk assessment and risk reduction);

Gas - Light oil burners

European Directives

-Regulation 2016/426/UE (appliances burning gaseous fuels)
-2014/35/UE (Low Tension Directive)
-2014/30/UE (Electromagnetic compatibility Directive)
-2006/42/EC (Machinery Directive)

Harmonized standards

-UNI EN 676 (Automatic forced draught burners for gaseous fuels)
-UNI EN 267(Automatic forced draught burners for liquid fuels)
-EN 55014-1 (Electromagnetic compatibility- Requirements for house hold appliances, electric tools and similar apparatus)
-EN 60204-1:2006 (Safety of machinery – Electrical equipment of machines.)
-CEI EN 60335-1 (Specification for safety of household and similar electrical appliances);
-CEI EN 60335-2-102 (Household and similar electrical appliances. Safety. Particular requirements for gas, oil and solid-fuel burning appliances having electrical connections).
-UNI EN ISO 12100:2010 (Safety of machinery - General principles for design - Risk assessment and risk reduction);

Gas - Heavy oil burners

European directives:

-Regulation 2016/426/UE (appliances burning gaseous fuels)
-2014/35/UE (Low Tension Directive)
-2014/30/UE (Electromagnetic compatibility Directive)
-2006/42/EC (Machinery Directive)

Harmonized standards

-UNI EN 676 (Automatic forced draught burners for gaseous fuels)
-EN 55014-1 (Electromagnetic compatibility- Requirements for house hold appliances, electric tools and similar apparatus)
-EN 60204-1:2006 (Safety of machinery – Electrical equipment of machines.)
-CEI EN 60335-1 (Specification for safety of household and similar electrical appliances);
-CEI EN 60335-2-102 (Household and similar electrical appliances. Safety. Particular requirements for gas, oil and solid-fuel burning appliances having electrical connections).
-UNI EN ISO 12100:2010 (Safety of machinery - General principles for design - Risk assessment and risk reduction);

Industrial burners

European directives

-Regulation 2016/426/UE (appliances burning gaseous fuels)
-2014/35/UE (Low Tension Directive)
-2014/30/UE (Electromagnetic compatibility Directive)
-2006/42/EC (Machinery Directive)

Harmonized standards

-EN 55014-1 (Electromagnetic compatibility- Requirements for house hold appliances, electric tools and similar apparatus)
-EN 746-2 (Industrial thermoprocessing equipment - Part 2: Safety requirements for combustion and fuel handling systems)
-UNI EN ISO 12100:2010 (Safety of machinery - General principles for design - Risk assessment and risk reduction);
-EN 60204-1:2006 (Safety of machinery – Electrical equipment of machines.)
-EN 60335-2 (Electrical equipment of non-electric appliances for household and similar purposes. Safety requirements)

Burner data plate

For the following information, please refer to the data plate:

- burner type and burner model: must be reported in any communication with the supplier
- burner ID (serial number): must be reported in any communication with the supplier
- date of production (year and month)
- information about fuel type and network pressure

Type	--
Model	--
Year	--
S.Number	--
Output	--
Oil Flow	--
Fuel	--
Category	--
Gas Pressure	--
Viscosity	--
El.Supply	--
El.Consump.	--
Fan Motor	--
Protection	--
Drwaing n°	--
P.I.N.	--

SYMBOLS USED

WARNING! Failure to observe the warning may result in irreparable damage to the unit or damage to the environment

DANGER! Failure to observe the warning may result in serious injuries or death.

WARNING! Failure to observe the warning may result in electric shock with lethal consequences

Figures, illustrations and images used in this manual may differ in appearance from the actual product.

BURNER SAFETY

The burners - and the configurations described below - comply with the regulations in force regarding health, safety and the environment. For more in-depth information, refer to the declarations of conformity that are an integral part of this Manual.

DANGER! Incorrect motor rotation can seriously damage property and injure people.

Residual risks deriving from misuse and prohibitions

The burner has been built in order to make its operation safe; there are, however, residual risks.

Do not touch any mechanical moving parts with your hands or any other part of your body. Injury hazard
Do not touch any parts containing fuel (i.e. tank and pipes). Scalding hazard
Do not use the burner in situations other than the ones provided for in the data plate.
Do not use fuels other than the ones stated.
Do not use the burner in potentially explosive environments.
Do not remove or by-pass any machine safety devices.
Do not remove any protection devices or open the burner or any other component while the burner is running.
Do not disconnect any part of the burner or its components while the burner is running.
Untrained staff must not modify any linkages.

After any maintenance, it is important to restore the protection devices before restarting the machine.
All safety devices must be kept in perfect working order.
Personnel authorized to maintain the machine must always be provided with suitable protections.

ATTENTION: while running, the parts of the burner near the generator (coupling flange) are subject to overheating. Where necessary, avoid any contact risks by wearing suitable PPE.

TECHNICAL DATA
SINGLE STAGE BURNERS

BURNERS TYPE/MODEL		P20 M-....25	P20 M-....40	P30 M-....40	P45 M-....40
Input	min. kW	80	80	150	240
	max. kW	230	280	350	520
	min. kcal/h	68.800	68.800	129.000	206.400
	max. kcal/h	197.800	240.800	301.000	447.200
Fuel		Natural gas	Natural gas	Natural gas	Natural gas
Category		I_{2h}	I_{2h}	I_{2h}	I_{2h}
Gas flow rate min.- max.	(Stm^3/h)	8.5 - 24.3	8.5 - 29.6	15.9 - 37	25.4 - 55
Gas pressure min.*	mbar	***	***	***	***
Gas pressure max.	mbar	200	200	200	200
Power supply		230V 3~ - 50Hz	230V 3~ - 50Hz	230V 3~ - 50Hz	230V 3~ - 50Hz
Power consumption	W	650	650	650	900
Electric motor (2800 rpm)	W	370	370	370	620
Protection		IP40	IP40	IP40	IP40
Weight	Kg	30	30	30	58
Gas train size		1”	$1”_{1/2}$	$1”_{1/2}$	$1”_{1/2}$
Gas connections		Rp 1	Rp $1_{1/4}$	Rp $1_{1/4}$	Rp $1_{1/2}$
Operation		single stage	single stage	single stage	single stage
Destination country		*	*	*	*

BURNERS TYPE/MODEL		P45 M-....50	P50 M-....40	P50 M-....50	P50 M-....65
Input	min. kW	240	350	350	350
	max. kW	520	523	860	860
	min. kcal/h	206.400	301.000	301.000	301.000
	max. kcal/h	447.200	449.700	739.600	739.600
Fuel		Natural gas	Natural gas	Natural gas	Natural gas
Category		I_{2h}	I_{2h}	I_{2h}	I_{2h}
Gas flow rate min.- max.	(Stm^3/h)	25.4 - 55	37 - 55	37 - 91	37 - 91
Gas pressure min.*	mbar	***	***	***	***
Gas pressure max.	mbar	200	200	200	500
Power supply		230V 3~ - 50Hz	230V 3~ / 400V 3N ~ 50Hz	230V 3~ / 400V 3N ~ 50Hz	230V 3~ / 400V 3N ~ 50Hz
Power consumption	W	900	1.600	1.600	1.600
Electric motor (2800 rpm)	W	620	1.100	1.100	1.100
Protection		IP40	IP40	IP40	IP40
Weight	Kg	58	58	58	65
Gas train size		2”	$1”_{1/2}$	2”	$2”_{1/2}$
Gas connections		Rp 2	Rp $1_{1/2}$	Rp 2	DN 65
Operation		single stage	single stage	single stage	single stage
Destination country		*	*	*	*

Note: all gas flow rates (Stm^3/h) are referred to standard gas conditions: 1013 mbar pressure, 15 °C temperature.

Flow rates are referred to G20 natural gas (nett calorific value: 34.02 MJ/Stm^3), if G25 is used (n.c.v.: 29.25 MJ/Stm^3), flow rates must be multiplied by 1.16 factor.

* Minimum pressure to get the maximum rate with any value of back pressure in combustion chamber. The burner operates correctly also with lower pressures but these must guarantee the needed rate.

*** See “NETWORK PRESSURE - RATE CURVES” on page 10

DOUBLE STAGE, PROGRESSIVE AND FULLY MODULATING BURNERS

BURNERS TYPE/MODEL		P20 M-....25	P20 M-....40	P30 M-....40	P45 M-....40
Input	min. low flame kW	85	85	65	145
	min. high flame kW	120	120	100	220
	max. kW	230	280	350	520
	min. low flame kcal/h	73.100	73.100	55.900	124.700
	min. high flame kcal/h	103.200	103.200	86.000	189.200
	max. kcal/h	197.800	240.800	301.000	447.200
Fuel		Natural gas	Natural gas	Natural gas	Natural gas
Category		I_{2h}	I_{2h}	I_{2h}	I_{2h}
Gas flow rate min.- max.	(Stm^3/h)	9 - 24.3	9 - 29.6	6.9 - 37	15.3 - 55
Gas pressure min.*	mbar	***	***	***	***
Gas pressure max.	mbar	200	200	200	200
Power supply		230V 3~ 50Hz	230V 3~ 50Hz	230V 3~ 50Hz	230V 3~ 50Hz
Power consumption	W	650	650	650	900
Electric motor (2800 rpm)	W	370	370	370	620
Protection		IP40	IP40	IP40	IP40
Weight	Kg	30	30	30	58
Gas train size		1"	$1"_{1/2}$	$1"_{1/2}$	$1"_{1/2}$
Gas connections		Rp 1	Rp $1_{1/4}$	Rp $1_{1/4}$	Rp $1_{1/2}$
Operation		double stage progressive fully modulating	double stage progressive fully modulating	double stage progressive fully modulating	double stage progressive fully modulating
Destination country		*	*	*	*

BURNERS TYPE/MODEL		P45 M-....50	P65 M-....50	P65 M-....65
Input	min. low flame kW	145	270	270
	min. high flame kW	220	480	480
	max. kW	520	970	970
	min. low flame kcal/h	124.700	232.200	232.200
	min. high flame kcal/h	189.200	412.800	412.800
	max. kcal/h	447.200	834.200	834.200
Fuel		Natural gas	Natural gas	Natural gas
Category		I_{2h}	I_{2h}	I_{2h}
Gas flow rate min.- max.	(Stm^3/h)	15.3 - 55	28.6 - 103	28.6 - 103
Gas pressure min.*	mbar	***	***	***
Gas pressure max.	mbar	200	200	500
Power supply		230V 3~ / 400V 3N ~ 50Hz	230V 3~ / 400V 3N ~ 50Hz	230V 3~ / 400V 3N ~ 50Hz
Power consumption	W	900	2000	2000
Electric motor (2800 rpm)	W	620	1500	1500
Protection		IP40	IP40	IP40
Weight	Kg	58	150	155
Gas train size		2"	2"	$2"_{1/2}$
Gas connections		Rp 2	Rp 2	DN 65
Operation		double stage progressive fully modulating	double stage progressive fully modulating	double stage progressive fully modulating
Destination country		*	*	*

Note: all gas flow rates (Stm^3/h) are referred to standard gas conditions: 1013 mbar pressure, 15 °C temperature.

Flow rates are referred to G20 natural gas (nett calorific value: 34.02 MJ/Stm^3), if G25 is used (n.c.v.: 29.25 MJ/Stm^3), flow rates must be multiplied by 1.16 factor.

* Minimum pressure to get the maximum rate with any value of back pressure in combustion chamber. The burner operates correctly also with lower pressures but these must guarantee the needed rate.

*** See "NETWORK PRESSURE - RATE CURVES" on page 10

BURNER MODEL IDENTIFICATION

Burners are identified by burner type and model. Burner model identification is described as follow.

Type: **P20**	Model:	**M-.**	**AB.**	**S.**	***.**	**A.**	**0.**	**40**
(1)		(2)	(3)	(4)	(5)	(6)	(7)	(8)

(1)	BURNER TYPE		
(2)	FUEL		M - Natural gas
(3)	OPERATION	Available versions	TN - Single stage
			AB - Double stage
			PR - Progressive
			MD - Fully modulating
(4)	BLAST TUBE LENGHT	(see overall dimensions)	
		Available versions	S - Standard
			L - Long
(5)	DESTINATION COUNTRY		* - see data plate
(6)	SPECIAL VERSION		A - Standard
(7)	BURNER EQUIPMENT	Available versions	0 - 2 Valves
			1 - 2 Valves + leakage control (optional if burner input < 1200 kW)
(8)	GAS TRAIN SIZE	(See Technical data)	
		25= Rp1	40 = Rp1 1/2
		50 = Rp2	65 = DN65

OVERALL DIMENSIONS IN mm

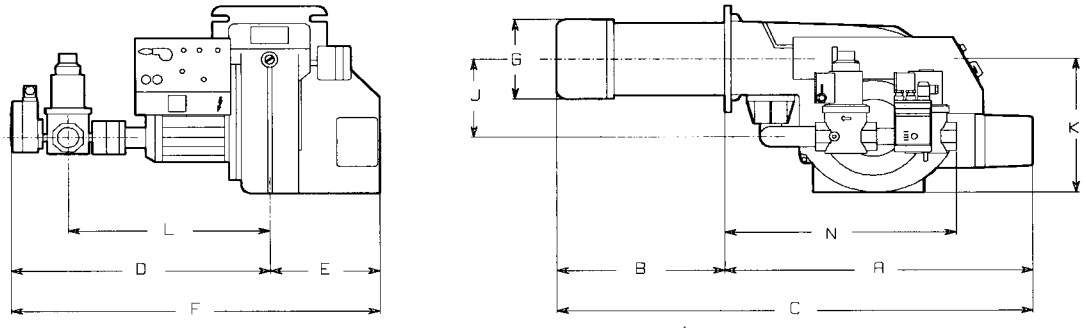

Fig. 4a

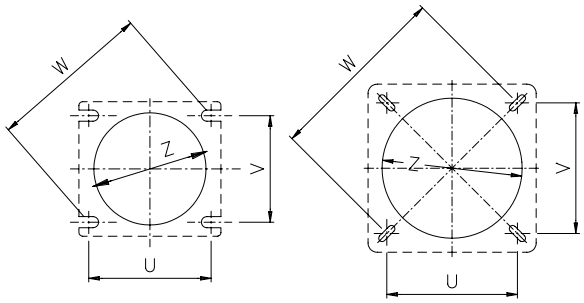

	U	V	W	Z
P20	155	155	220	160
P30	155	155	220	160
P45	215	190	287	200
P50	215	190	287	200
P65	233	233	330	250

Fig. 4b - Boiler plate drilling template - Make 4 M10 threaded holes

	A	B	BL	C	CL	D	E	F	G	K	J	L	N
P20	555	210	295	765	850	510	200	710	126	290	178	360	370
P30	555	230	330	785	885	510	200	710	148	290	178	360	370
P45	660	255	355	915	1015	640	250	890	148	350	210	460	450
P50	620	345	435	965	1055	640	250	890	184	350	210	460	450
P65	825	325	415	1150	1240	750	350	1060	184	375	230	460	450

BL - Long blast tube

PERFORMANCE CURVES

P20 M-.TN...25

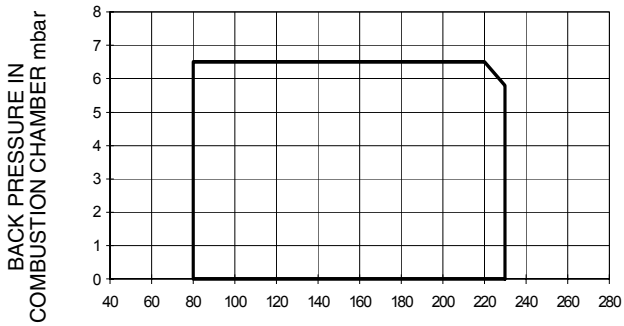

P30 M-.TN..40

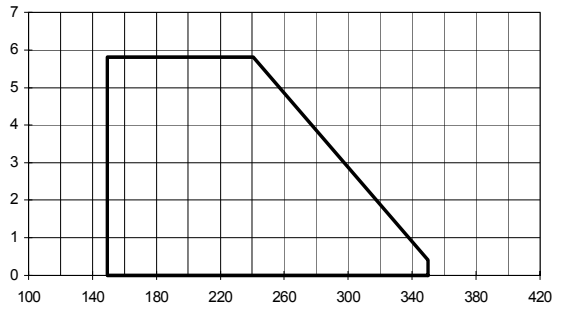

Fig. 5

P20 M-.AB...25 - M-.PR...25 - M-.MD...25

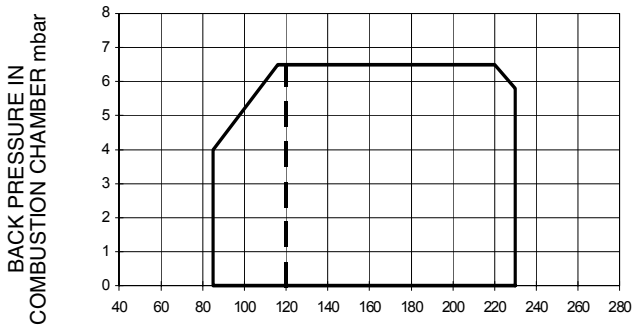

P30 M-.AB...40 - M-.MD...40 - M-.PR...40

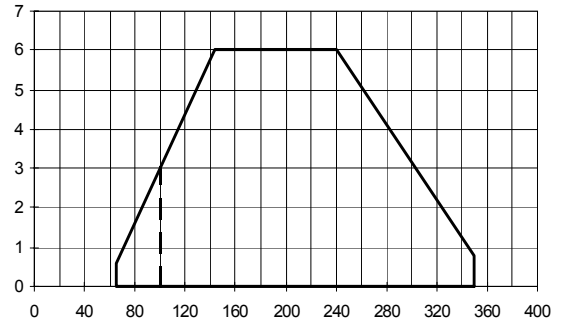

Fig. 6

P20 M-.TN...40

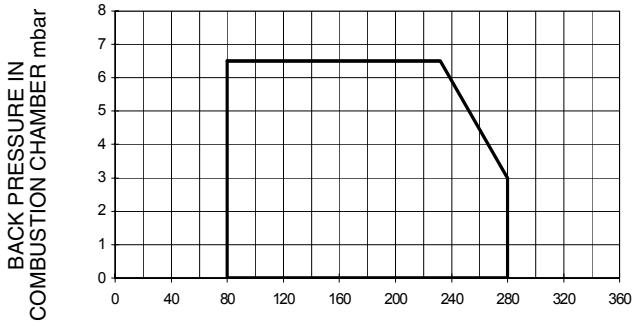

P45 M-.TN...xx

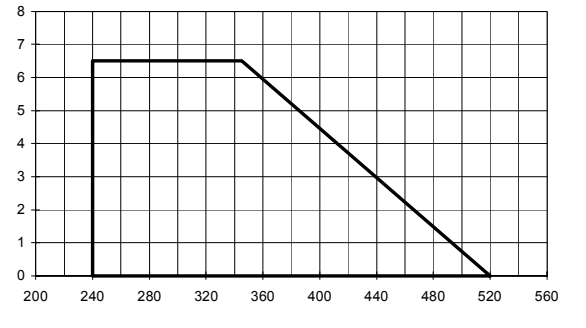

Fig. 7

P20 M-.AB...40 - M-.PR...40 - M-.MD...40

P45 M-.AB...xx - M-.PR...xx - M-.MD...xx

Fig. 8

------ Minimum high flame

To get the input in kcal/h, multiply value in kW by 860.

P50 M-.TN...40

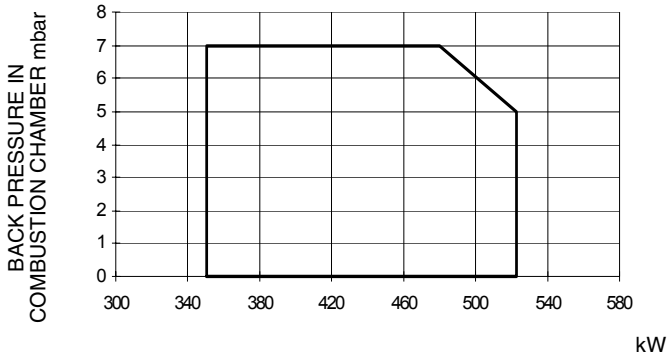

P65 M-.AB...xx - M-.PR...xx - M-.MD...xx

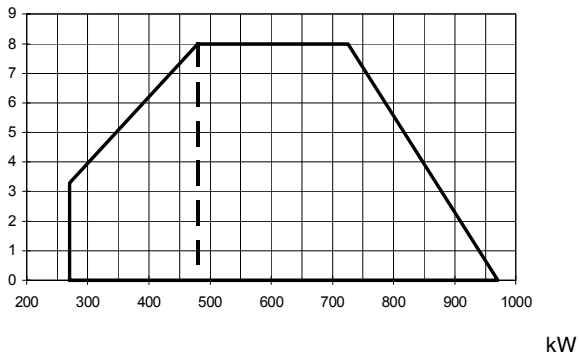

Fig. 9

P50 M-.TN...50 - M-.TN...65

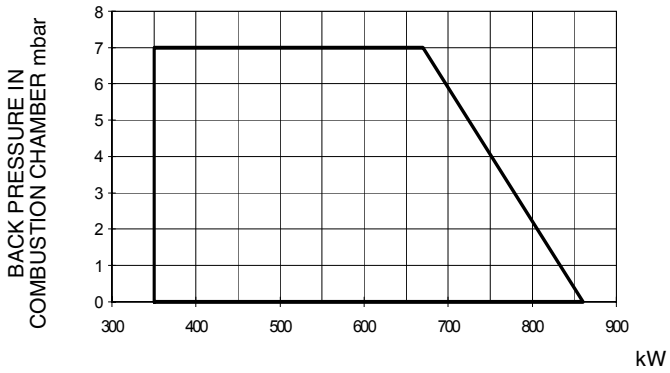

Fig. 10

------ Minimum high flame

PRESSURE - RATE IN COMBUSTION HEAD CURVES

Curves are referred to a null pressure in combustion head!

The pressure - gas rate curves are referred to the burner in operation with 3% of O_2, with the combustion head at the maximum opening, servocontrol at the maximum opening and gas butterfly valve fully opened. Refer to Fig. 11, showing the correct way to take the gas pressure, considering values of backpressure in combustion chamber.

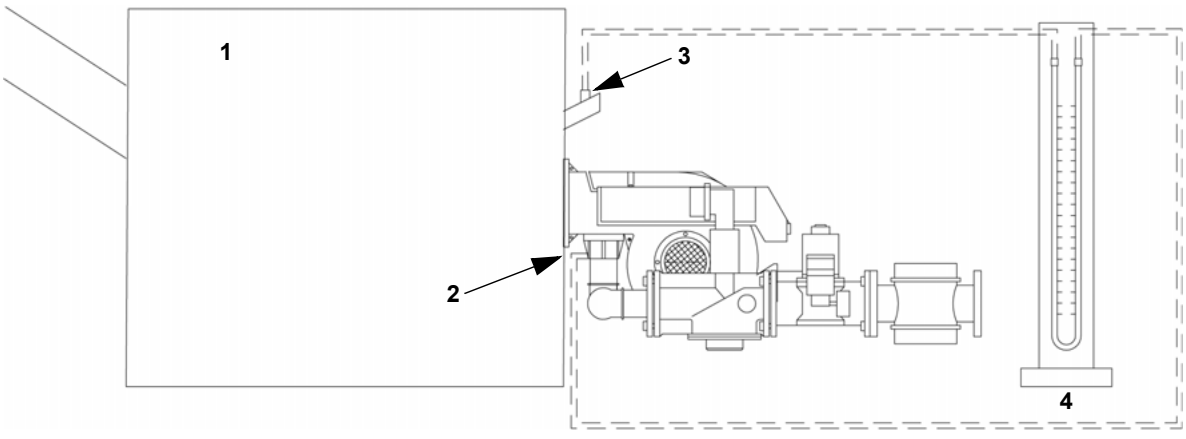

Fig. 11

Key

1 Boiler
2 Gas pressure port on butterfly valve
3 Sightglass cooling port
4 Water column pressure gauge

NOTE: THE PRESSURE-RATE CURVES ARE INDICATIVE; FOR A PROPER SETTING OF THE GAS RATE, PLEASE REFER TO THE GAS METER READING.

P20

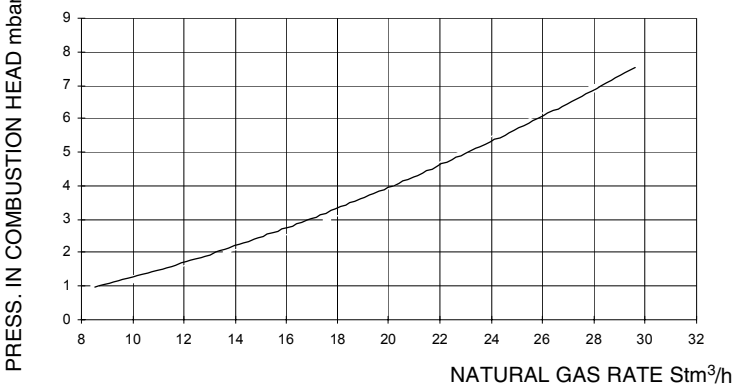

Fig. 12

P30

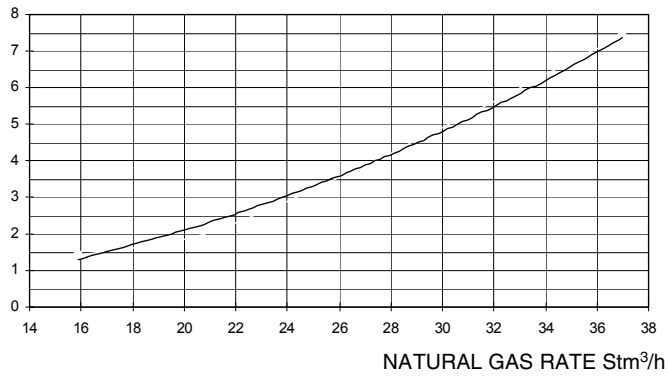

Fig. 13

P45

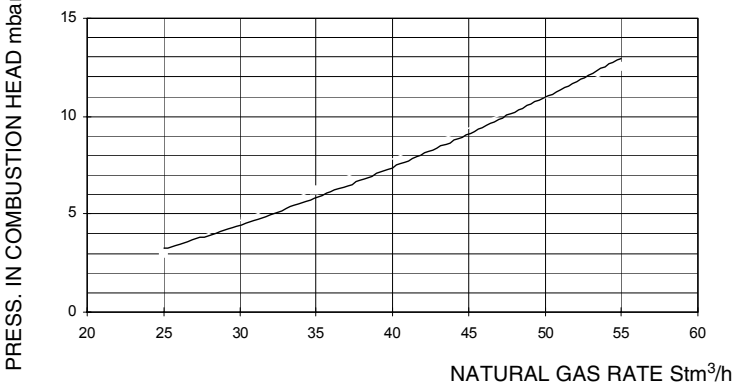

Fig. 14

P50

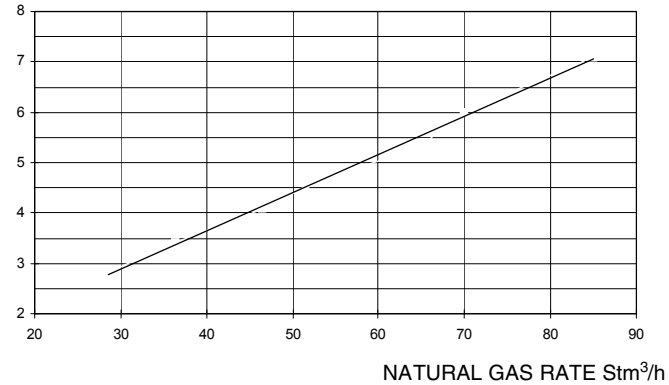

Fig. 15

P65

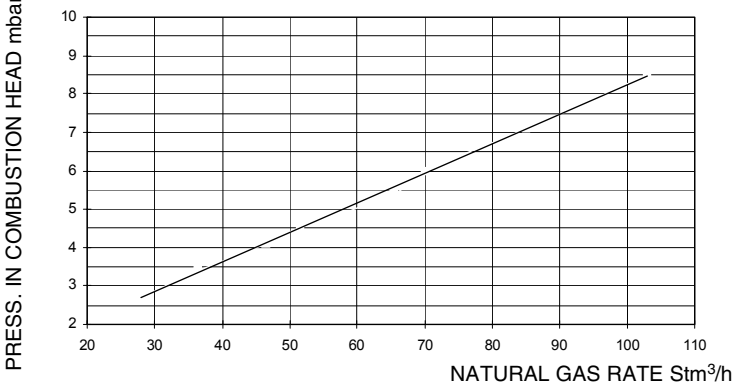

Fig. 16

NETWORK PRESSURE - RATE CURVES

P20 M-.TN..25

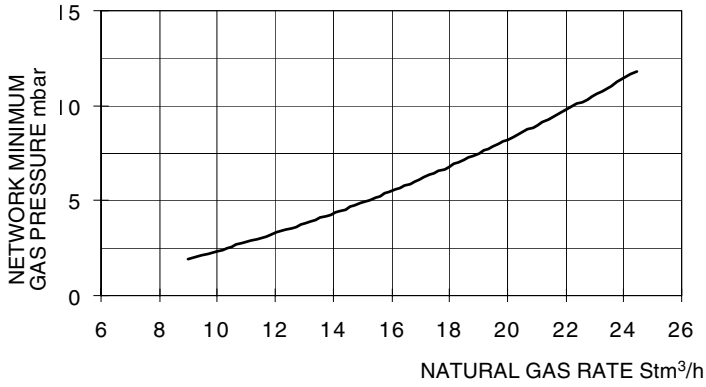

Fig. 17

P30 M-.TN

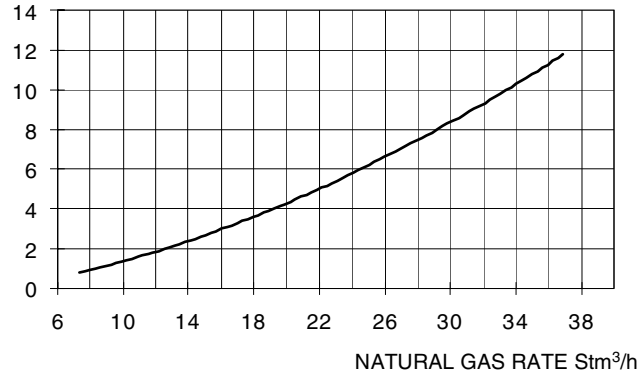

Fig. 18

P20 M-.TN..40

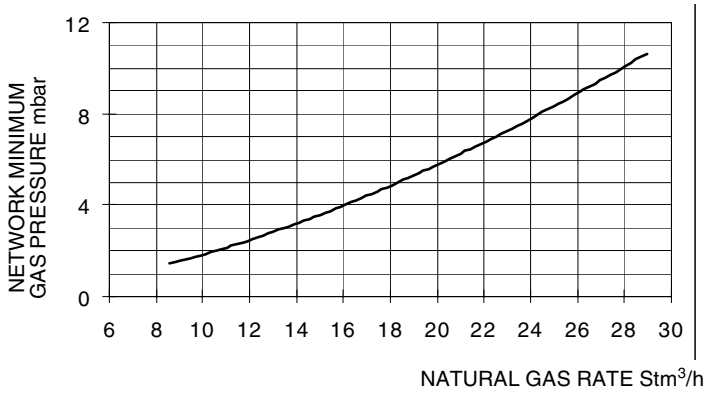

Fig. 19

P30 M-.AB

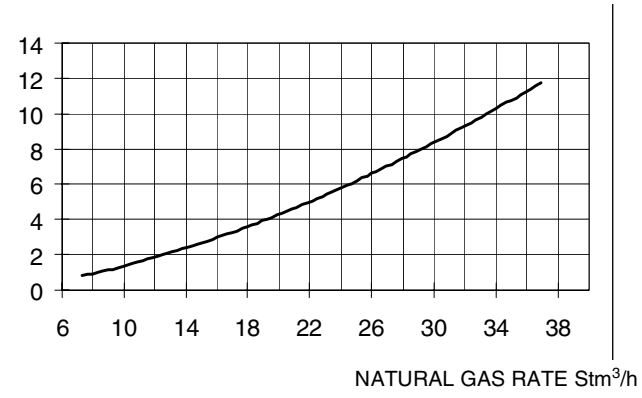

Fig. 20

P20 M-.AB..25

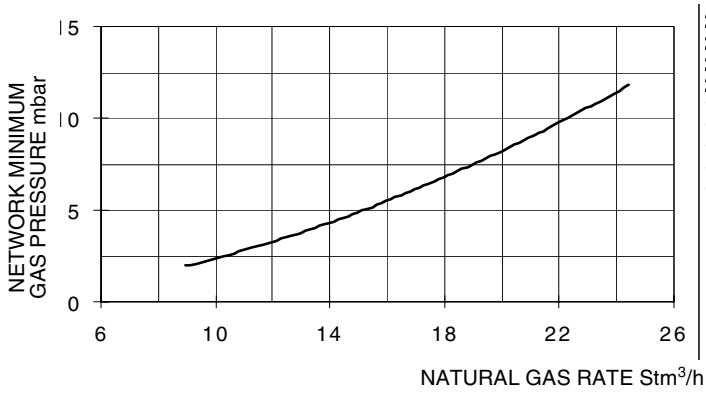

Fig. 21

P45 TN

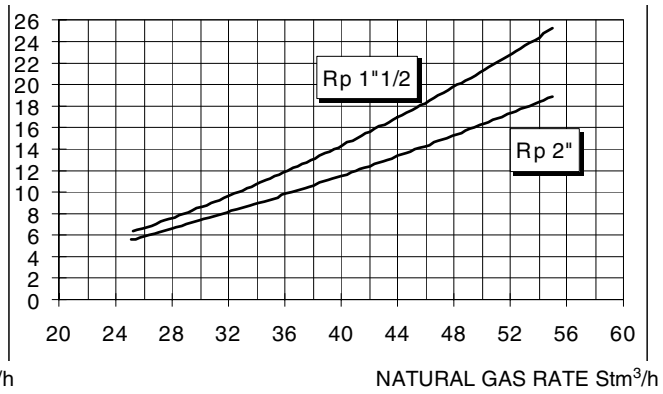

Fig. 22

P20 M-.AB..40

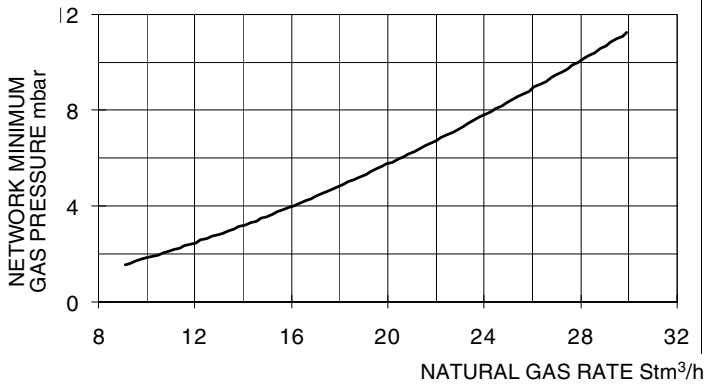

Fig. 23

P45 M-.AB

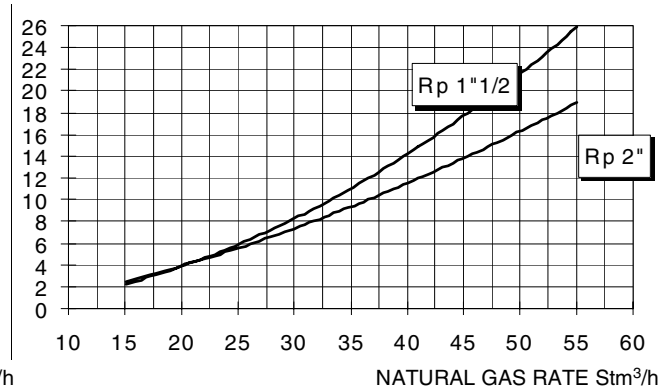

Fig. 24

P50 M-.TN..40

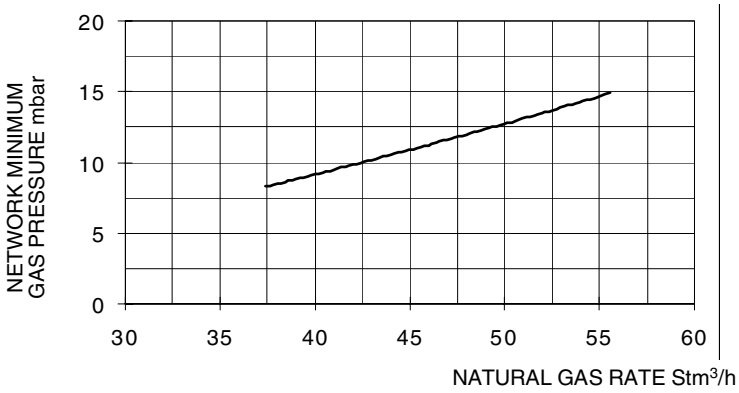

Fig. 25

P50 M-.TN..65

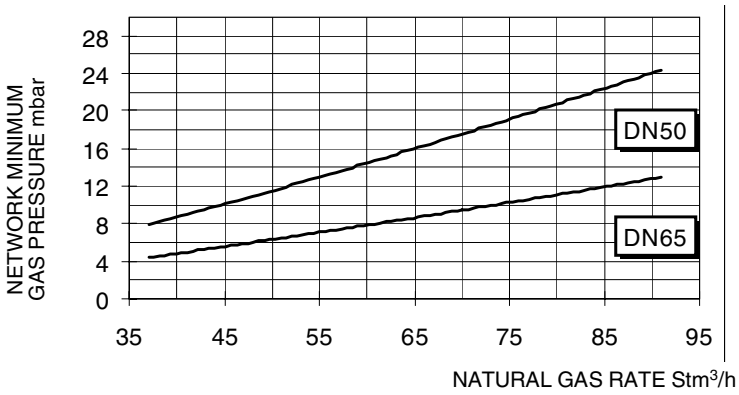

Fig. 26

P65 M-...50-65

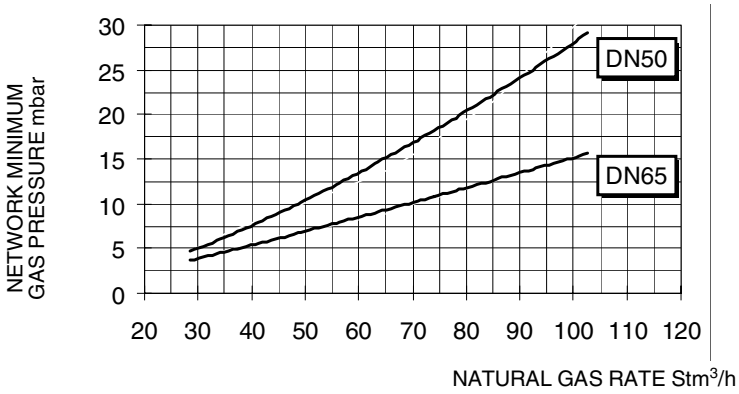

Fig. 27

MOUNTINGS AND CONNECTIONS

Packing

The burners are dispatched in cardboard pakages with dimensions:

P20 - P30	98 x 55 x 46	(W x H x D)
P45 - P50	118 x 67 x 57	(W x H x D)
P65	127 x 84 x 76	(W x H x D)

Packing cases of this kind are affected by humidity and are not suitable for stacking. The following are placed in each packing case.

1 burner with detached gas train (but electrically connected to the burner in DN65 models);

1 gasket to be inserted between the burner and the boiler;

1 envelope containing this manual .

Unpacking the burner take care of not to damage the electrical connection between the burner and the gas train (only on DN65 models).

To get rid of the burner's packing and in the event of scrapping of the latter, follow the procedures laid down by current laws on disposal of materials.

Fitting the burner to the boiler

After fitting the burner to the boiler ensure that the space between the blast tube and the refractory lining is sealed with appropriate insulating material (ceramic fibre cord or refractory cement).

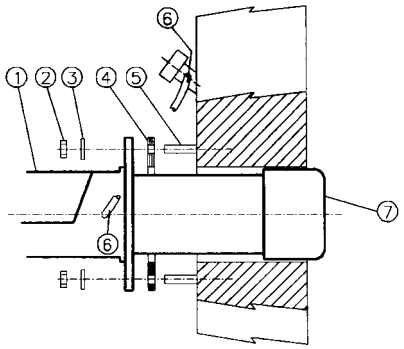

Fig. 28

Key

1 Burner
2 Fixing nut
3 Washer
4 Seal
5 Stud bolt
6 Sightglass cleaning tube
7 Blast tube

Matching the burner to the boiler

The burners described in this manual have been tested with combustion chambers that comply with EN676 regulation and whose dimensions are described in the diagram in Fig. 29. In case the burner must be coupled with boilers with a combustion chamber smaller in diameter or shorter than those described in the diagram, please contact the supplier, to verify that a correct matching is possible, with respect of the application involved.

To correctly match the burner to the boiler verify the necessary input and the pressure in combustion chamber are included in the burner performance curve; otherwise the choice of the burner must be revised consulting the burner manufacturer.

To choose the blast tube lenght follow the instructions of the boiler manufacturer. In absence of these consider the following:

- Cast-iron boilers, three pass flue boilers (with the first pass in the rear part): the blast tube must protrude no more than 100 mm into the combustion chamber.

The length of the blast tubes does not always allow this requirement to be met, and thus it may be necessary to use a suitably-sized spacer to move the burner backwards.

- Pressurised boilers with flame reversal: in this case the blast tube must penetrate at least 50 - 100 mm into combustion chamber in respect to the tube bundle plate.

Key

a) Heat input Q in kW

b) Lenght of the flame tube in meters

c) Flame tube firing intensity in MW/m^3

d) Combustion chamber diameter (m)

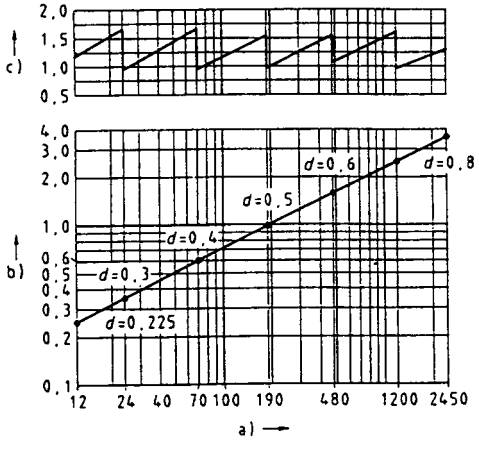

Fig. 29 - Firing intensity, diameter and lenght of the test flame tube as a function of the heat input Q.

ELECTRICAL CONNECTIONS

- Remove the front panel of the electrical board on the burner.

- Carry out the connections in the power supply electrical board as shown in the following diagrams, verify the fan motor direction (only in three-phase burners) and refit the electrical board front panel.

WARNING: The burners with high-low flame operation are fitted with an electrical bridge between terminals 6 and 7; in the event of connecting the high/low flame thermostat remove this bridge before connecting the thermostat.

IMPORTANT: In connecting electric supply wires to burner teminal block be sure that ground wire should be longer than phase and neutral ones.

For a complete key, see on Page 32, Page 35 and Page 42.

Diagrams for burners WITH printed circuit

Burners type P20 - P30 - P50 - P65 single stage, double stage and progressive

Fig. 30a

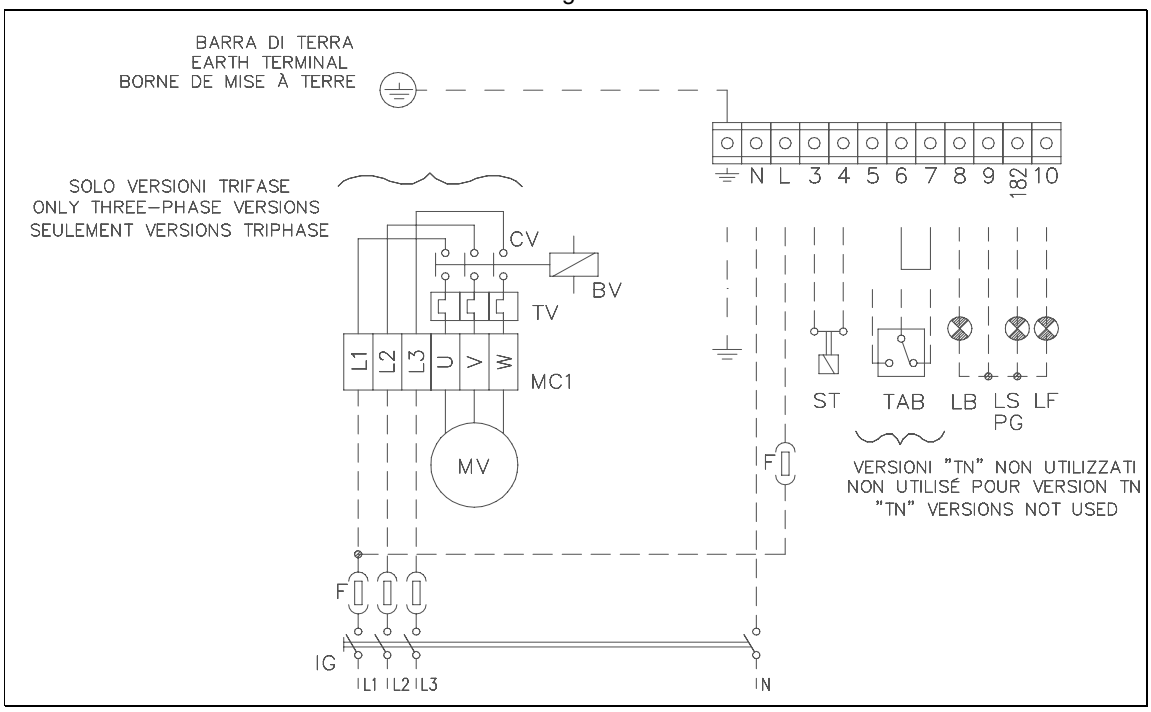

Burners type P45 single stage, double stage and progressive

Fig. 30b

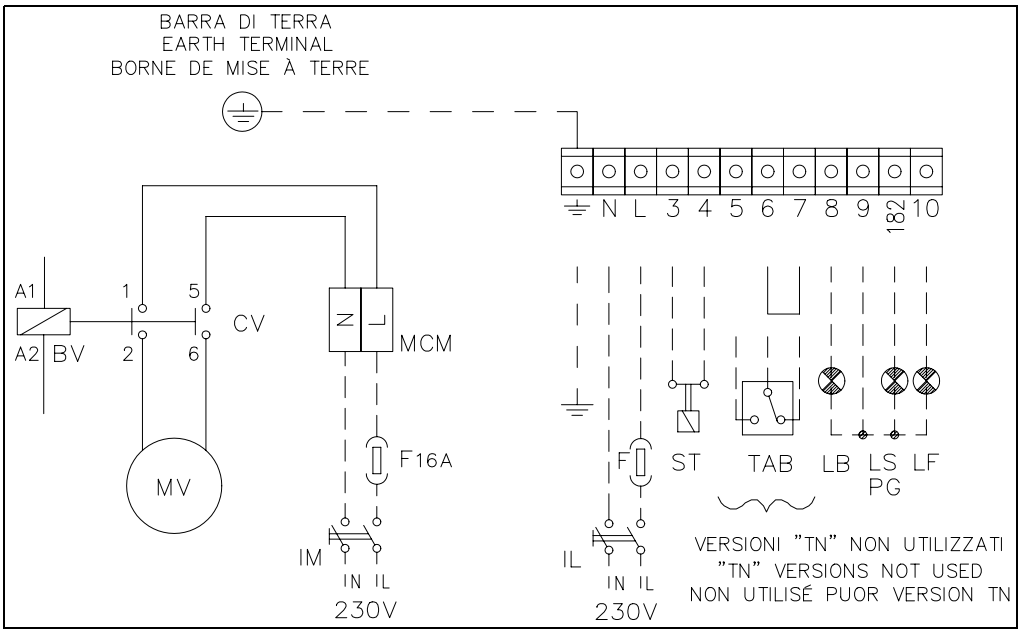

Power supply terminal board (three-phase burners)

Fig. 31a

Power supply terminal board for mono-phase burners type P45

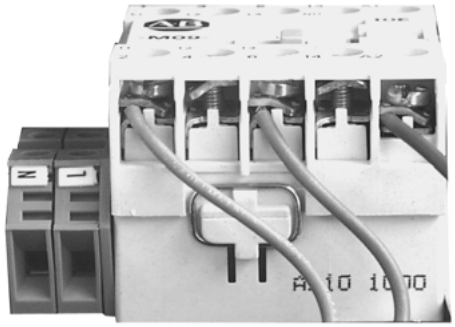

Fig. 31b

Terminal block for connections on printed circuit

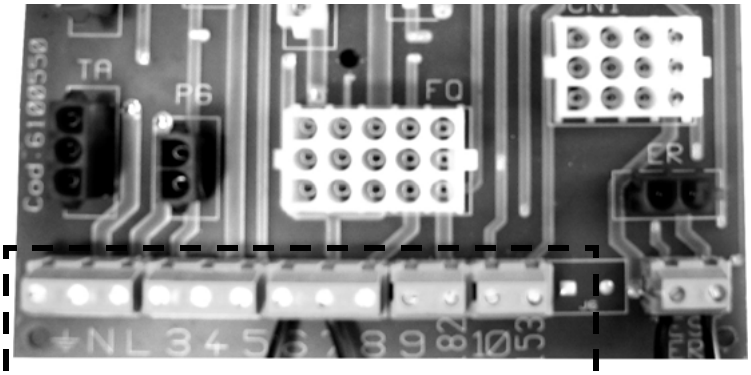

Morsettiera di collegamento su circuito stampato

Fig. 32

Diagrams for burners WITHOUT printed circuit

Type P20 - P30 M-.TN...

Fig. 33a

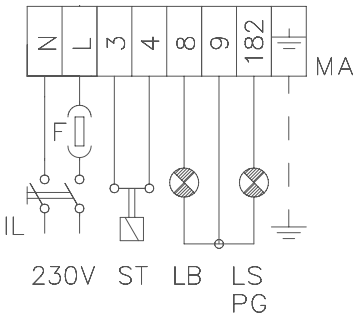

Type P20 - P30 M-.AB...

Fig. 33b

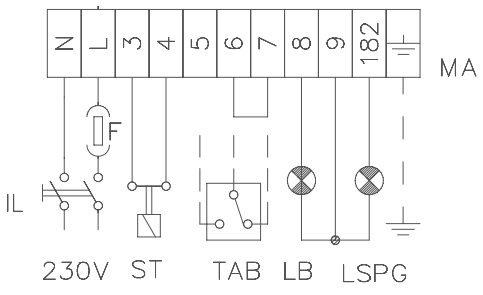

Type P50 M-.TN...

Fig. 34a

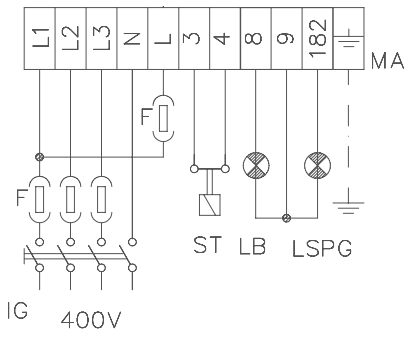

Type P65 M-.AB...

Fig. 34b

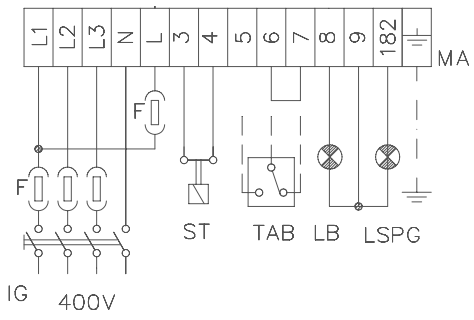

Type P20 - P30 M-.MD...

Fig. 35a

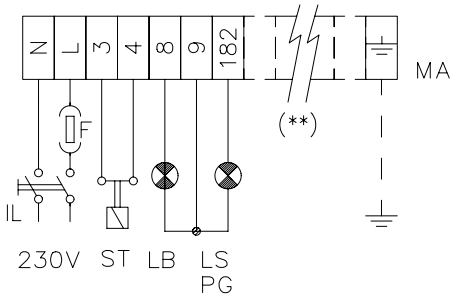

Type P45 M-.MD

Fig. 35b

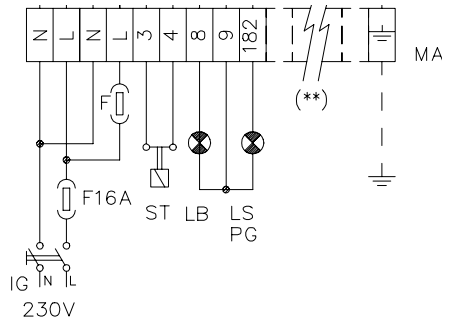

Type P65 M-.MD

Fig. 35c

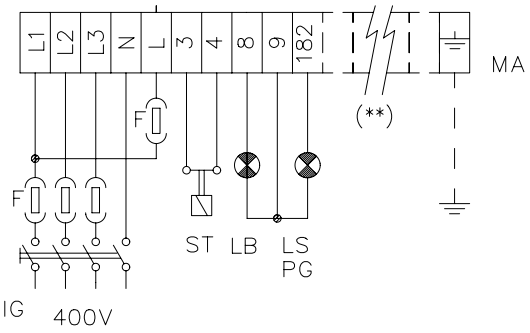

PROBE CONNECTION ON FULLY MODULATING BURNERS

(**)

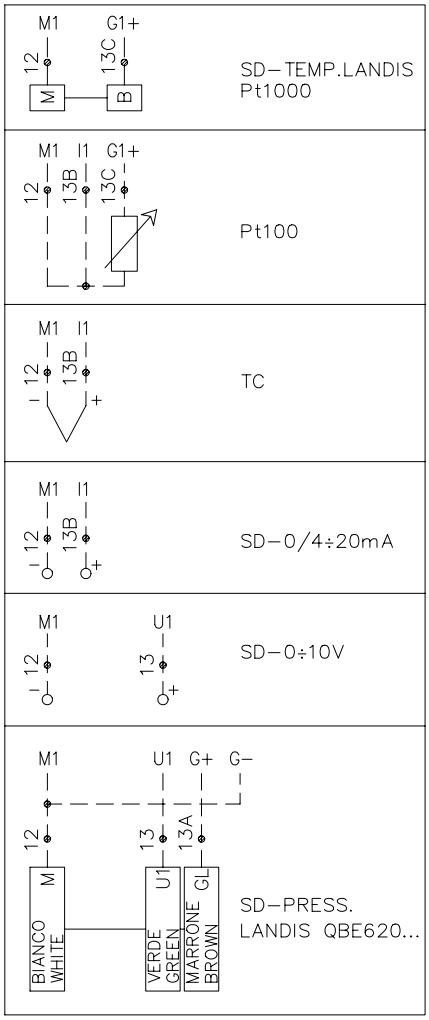

Fig. 36

(**) Probe connection, see Fig. 36

Rotation of fan motor

After completing the electrical connection of the burner, remember to check the rotation of the fan motor. The motor should rotate in an anti-clockwise direction looking at cooling fan. In the event of incorrect rotation reverse the three-phase supply and check again the rotation of the motor.

NOTE. the burners are supplied for three-phase 400 V supply, and in the case of three-phase 230 V supply it is necessary to modify the electrical connections into the terminal box of the electric motor and replace the overload tripped relay.

RESPECT THE BASIC SAFETY RULES. MAKE SURE OF THE CONNECTION TO THE EARTHING SYSTEM. DO NOT REVERSE THE PHASE AND NEUTRAL CONNECTIONS. FIT A DIFFERENTIAL THERMAL MAGNET SWITCH ADEQUATE FOR CONNECTION TO THE MAINS.

GAS TRAIN INSTALLATION DIAGRAMS

The figures shown the diagrams with the gas train components wich are included in the delivery and those wich must be fitted by the customer. The diagrams complies with regulations in force.

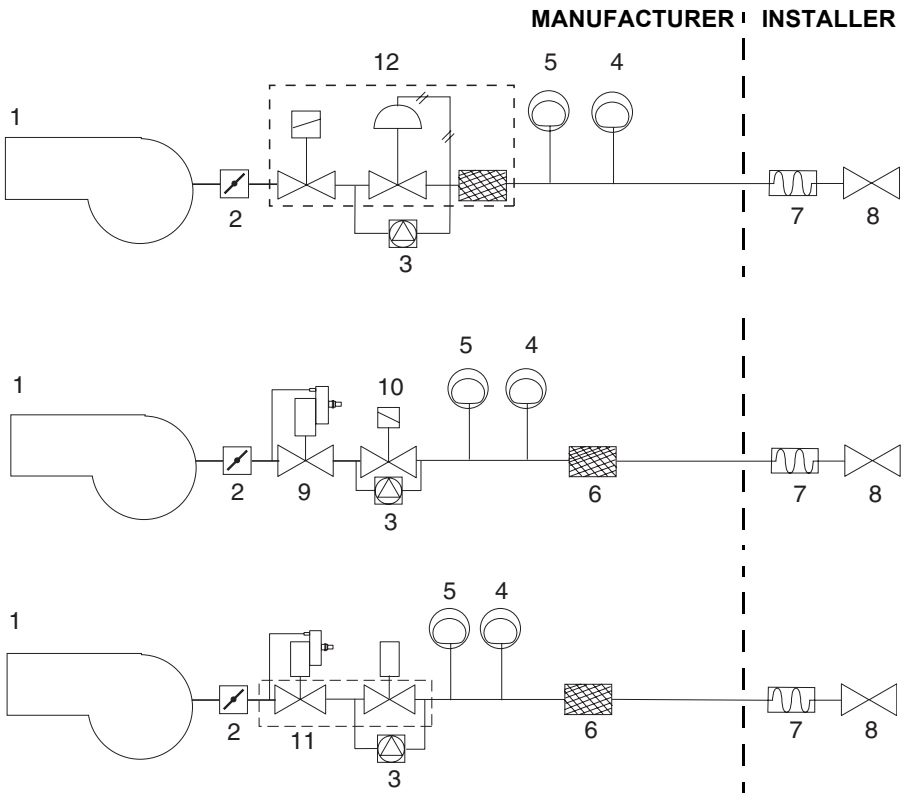

Fig. 37a
Gas train with valves group MB-DLE (2 valves + gas filter + pressure governor + pressure switch) + leakage control VPS504

Fig. 37b
Gas train with safety valve + gas valve with built in pressure governor + leakage control VPS504

Fig. 37c
Gas train with valves group VGD with built-in gas pressure governor + leakage control VPS504

Key

1 Burner
2 Butterfly valve
3 Leakage control device (optional if output < 1200 kW)
4 Maximum gas pressure switch (optional)
5 Minimum gas pressure switch
6 Gas filter
7 Bellow joint
8 Manual cock
9 Gas valve with pressure governor
10 Safety gas valve
11 Valves group VGD
12 Valves group MB-DLE
13 Valves group DMV-DLE
14 Pressure governor with filter
15 Leakage control pressure switch
16 Gas pressure governor

Fig. 37d
Gas train with valves group VGD with built-in gas pressure governor + leakage control LDU11

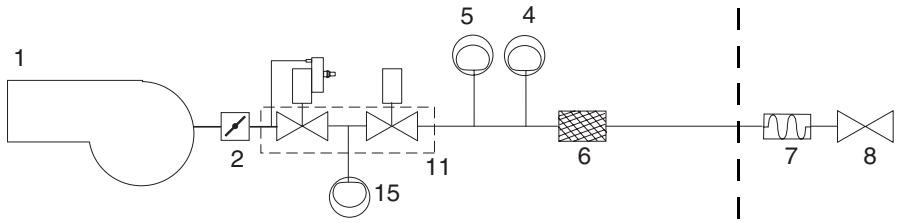

Fig. 37e
Gas train with valves group DMV-DLE + leakage control VPS504

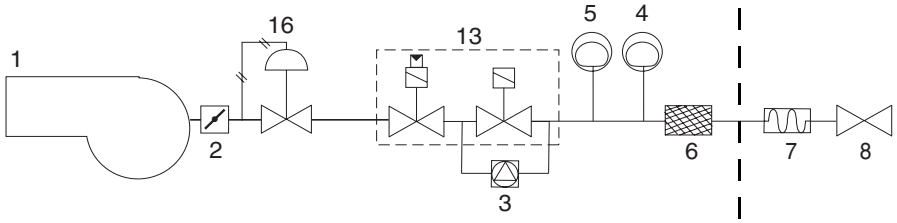

Fig. 37f
Gas train with valves group DMV-DLE + leakage control LDU11

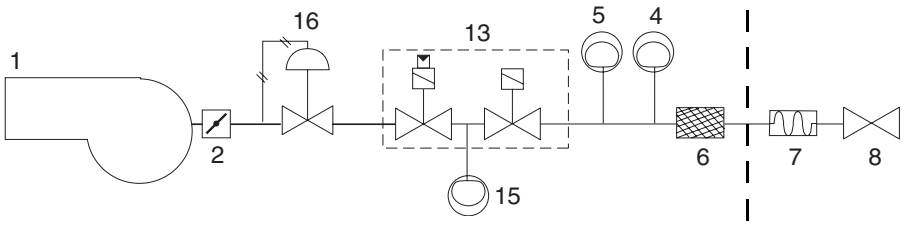

Key

1 Burner
2 Butterfly valve
3 Leakage control device (optional if output < 1200 kW)
4 Maximum gas pressure switch (optional)
5 Minimum gas pressure switch
6 Gas filter
7 Bellow joint
8 Manual cock
9 Gas valve with pressure governor
10 Safety gas valve
11 Valves group VGD
12 Valves group MB-DLE
13 Valves group DMV-DLE
14 Pressure governor with filter
15 Leakage control pressure switch
16 Gas pressure governor

SETTINGS

WARNING!
THE SEALED SCREWS MUST NOT BE UNLOOSED!
IN A SUCH CASE THE DEVICE WARRANTY IS IMMEDIATELY INVALIDATE!

Fig. 38 - Multibloc MB-DLE - VPS504 .

The multibloc unit is a compact unit consisting of two valves, gas pressure switch, pressure stabilizer and gas filter. It can be paired jointly to the Dungs VPS504 sealing controls.

The valve is adjusted by means of the RP regulator after slackening the locking screw VB by a number of turns. By unscrewing the regulator RP the valve opens, screwing the valve closes.

To set the fast opening remove cover T, reverse it upside down and use it as a tool to rotate screw VR. Clockwise rotation reduces start flow rate, anticlockwise rotation increases it.

Do not use a screwdriver on the screw VR!

The pressure stabilizer is adjusted by operating the screw VS located under the cover C. By screwing down the pressure is increased and by unscrewing it is reduced.

Note: the screw VSB must be removed only in case of replacemente of the coil.

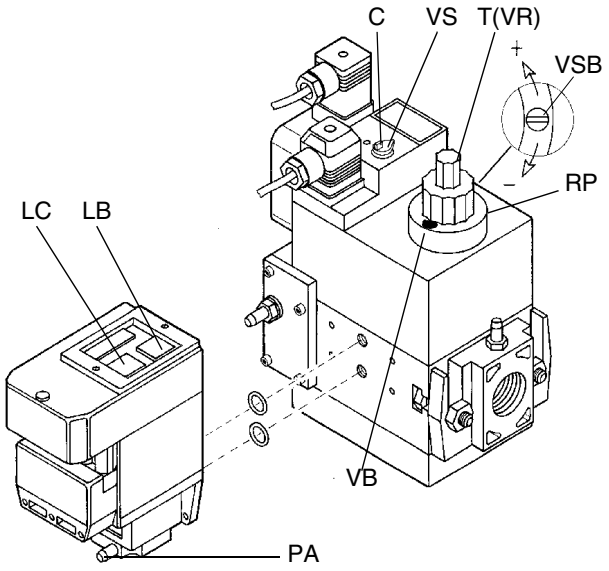

Fig. 38

Leakage control device VPS504 (Optional)

The VPS504 check the operation of the seal of the gas shut off valves costituting the MB-DLE. This check, carried out as soon as the boiler thermostat gives a start signal to the burner, creates, by means of the diaphragm pump inside it, a pressure in the test space of 20 mbar higher than the supply pressure. When wishing to monitor the test, install a pressure gauge ranged to that of the pressure supply point PA. If the test cycle is satisfactory, after a few seconds the consent light LC (yellow) comes on. In the opposite case the lockout light LB (red) comes on.

To restart it is necessary to reset the appliance by pressing the illuminated pushbutton LB.

Gas valve Dungs MV-DLE

- To adjust the gas flow rate loosen the screw VB and rotate the regulator RP as necessary. Unscrew to close the valve, screw to open.
- Tighten the screw VB.
- To set the fast opening remove cover T, reverse it upside down and use it as a tool to rotate the screw VR. Clockwise rotation reduces the ignition flow rate, anticlockwise rotation increase it.

Note: the screw VSB must be removed only in case of replacemente of the coil.

Do not use a screwdriver on the screw VR!

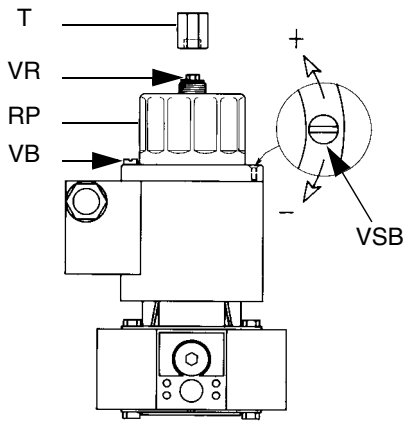

Fig. 39

Gas valve Dungs MVD

- To adjust the gas flow rate unscrew the plug T, slacken the locking nut and apply a screwdriver to the adjusting screw VR. Turn clockwise to close the valve or counterclockwise to open.
- When this operation has been completed lock the nut and screw down the plug T.
- To replace the coil remove the plug T, withdraw the coil B and after replacing the coil refit the plug T.

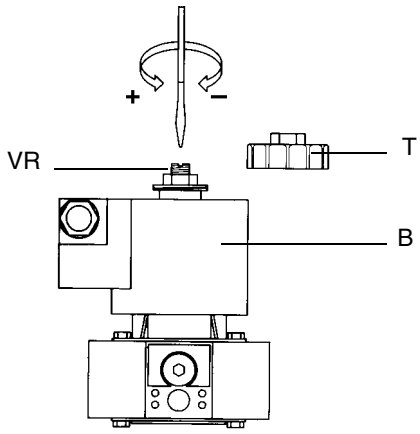

Fig. 40

Landis gas valves

Version with SKP20 (with incorporated pressure governor).

- To increase or decrease gas pressure, and therefore gas flow rate, remove the cap T and use a screwdriver to adjust the regulator screw VR. Turn clockwise to increase the flow, anti-clockwise to reduce it.
- Connect up the gas tubing to the gas pressure nipple (TP in figure).

Leave the blowhole free (SA in figure).

Should the spring fitted not permit satisfactory regulation, ask one of our service centres for a suitable replacement.

(For further informations see also the appendix)

WARNING:
removing the four screws BS drives the device to be unserviceable!

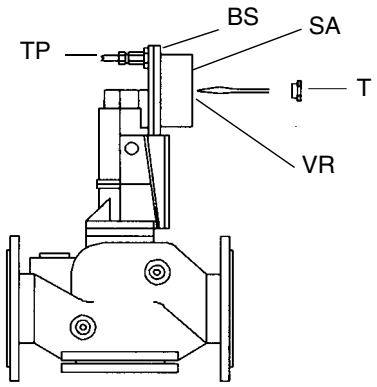

Fig. 41

Landis gas valves VGD

Version with SKP20 (with incorporated pressure governor).

- To increase or decrease gas pressure, and therefore gas flow rate, remove the cap T and use a screwdriver to adjust the regulator screw VR. Turn clockwise to increase the flow, anti-clockwise to reduce it.
- Connect up the gas tubing to the gas pressure nipple (TP in figure).

Leave the blowhole free (SA in figure).

Should the spring fitted not permit satisfactory regulation, ask one of our service centres for a suitable replacement.

(For further informations see also the appendix)

⚠ **WARNING: removing the four screws BS causes the device to be unserviceable!**

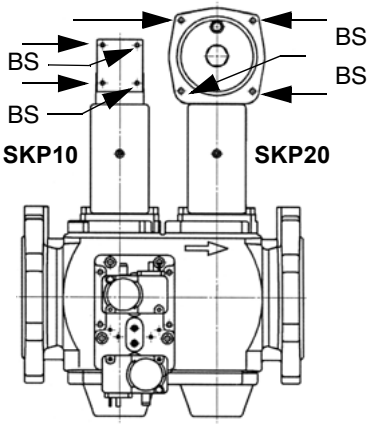

Fig. 42a

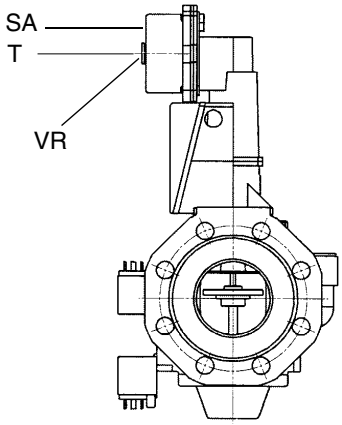

Fig. 42b

Dungs Valves

SV (without regulation)
SV-D Quick opening valve with regulation
SV-DLE Slow opening valve with regulation

SV-D...

- To adjust the valve slacken the screw VR and turn the knob G.
- Rotate clockwise to open the valve
- Rotate counterclockwise to close the valve
- Tight the screw VR at the end of setting

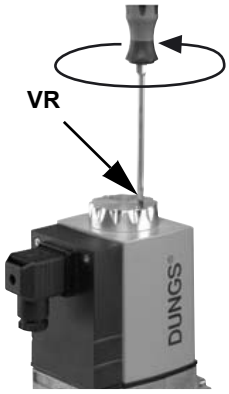

Fig. 43a

Fig. 43b

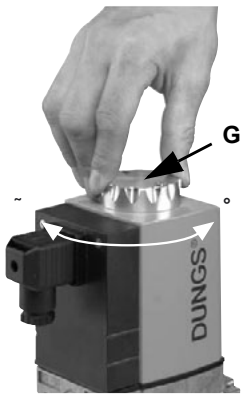

Fig. 43c

SV-DLE...

- To adjust the valve slacken the screw VR and turn the knob G.
- Rotate clockwise to open the valve
- Rotate counterclockwise to close the valve
- Tight the screw VR at the end of setting

Rapid stroke adjustment

- Unscrew the cap E from the hydraulic brake unit

Turn the adjustment cap E upside down and use it as a tool, tucking it in the regulation spindle

- Turn clockwise to increase the rapid stroke

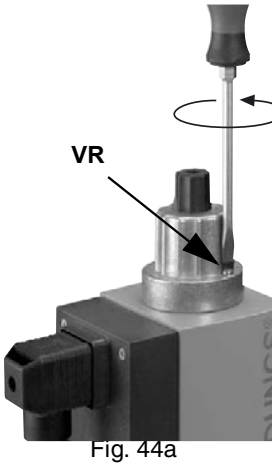

Fig. 44a

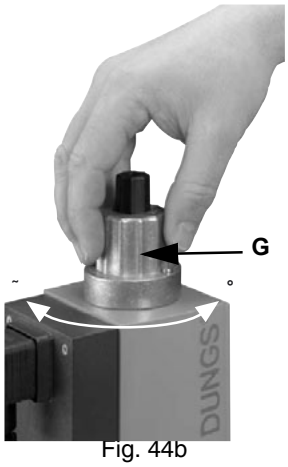

Fig. 44b

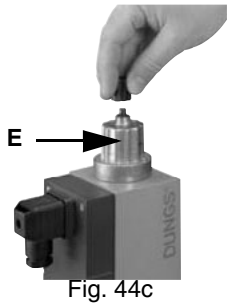

Fig. 44c

ValvesDungs DMV-DLE

Setting is carried out working on the screw V1. Turning clockwise the valve closes, turning counterclockwise the valve opens.

Fast stroke setting

- Unscrew the setting cap E.
- Turn the cap upside down and use it as a tool tucking it in the regulation spindle.

Rotate counterclockwise to increase rapid stroke.

Warning: the knob F doesn't make any setting!

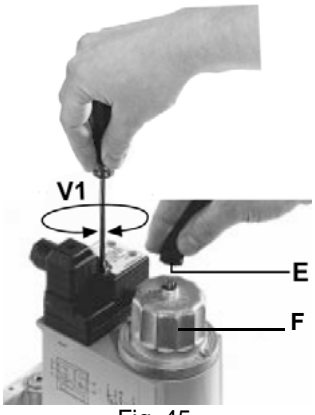

Fig. 45

Pressure regulator Dungs FRS
Adjustment

- Unscrew the protection cap A
- Rotate the regulation screw B clockwise to increase the pressure or counterclockwise to decrease it
- Check the pressure at the end of settings
- Replace the protection cap A

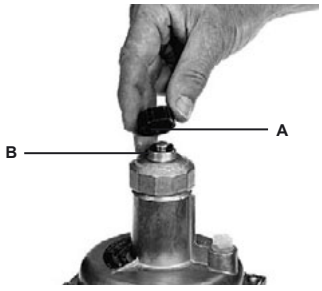

Fig. 46a

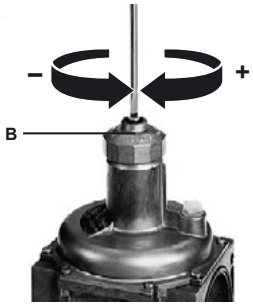

Fig. 46b

GAS FILTER

The gas filters are components that remove the dust particles carried by the gas, and prevent the elements at risk (e.g.: burners, counters and regulators) from becoming rapidly blocked. The filter is normally installed upstream from all the control and on-off devices.

GAS FILTER MAINTENANCE

Flanged fittings - Fig. 47a

After having ensured that there is no pressurised gas inside the filter, remove the cover (1) by unscrewing the fastening screws (8). Remove the filter cartridge (3), wash it in soap and water, blow it with compressed air (or replace if necessary) and put it back in its initial position, checking that it fits between the positioning guides (6) on the bottom (5) and that it does not stop the cover (1) from being put back in place. Finally, put the cover (1) back in place, making sure that the O-Ring (2) is in its seat and that the filter cartridge (3) fits neatly between the guides (6) on the cover (1), the same as those on the bottom (5).

Threaded fittings - Fig. 47b and Fig. 47c

After having ensured that there is no pressurised gas inside the filter, remove the cover (5) by unscrewing the fastening screws (1). Remove the filter cartridge (3), wash it in soap and water, blow it with compressed air (or replace if necessary) and put it back in its initial position, checking that it fits between the positioning guides (7) and that it does not stop the cover (5) from being put back in place. Finally, put the cover (5) back in place, making sure that the O-Ring (4, Fig. 47b) is in its seat.

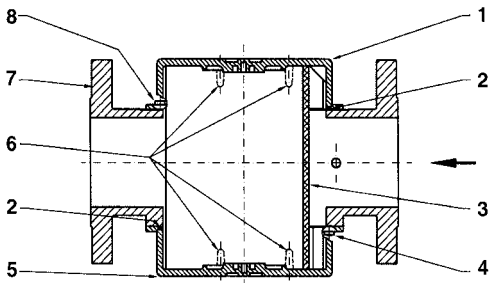

Fig. 47a

Key (Fig. 47a)

1 Cover
2 O-Ring
3 Filter cartridge
4 Screws M5 x 12
5 Bottom
6 Positioning guides
7 Body
8 Screws M5 x 14

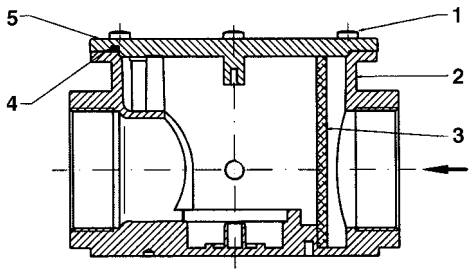

Fig. 47b

Key (Fig. 47b - Fig. 47c)

1 Fastening screws
2 Body
3 Filter cartridge
4 O-Ring
5 Cover
6 Pressure port
7 Positioning guides

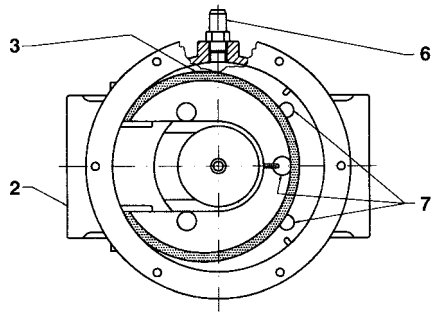

Fig. 47c - Top view, without cover

ADJUSTMENT OF GAS AND AIR FLOW RATE

WARNING: During commissioning operations, do not let the burner operate with insufficient air flow (danger of formation of carbon monoxide); if this should happen, shut down the burner, increase the opening of the air damper and start up the burner again to ensure the purging of the carbon monoxide from the combustion chamber.

Startup input

The start-up heat input shall not exceed 120 kW (single stage burners) or 1/3 of nominal input (2 stages or fully modulating burners). In order to comply with these requirements, single stage burners are dispatched from the factory with appropriate setting of the hydraulic brake of gas valve.

On 2 stages or modulating burners, take care to set the minimum gas flow rate lower than 1/3 of nominal input.

Important. Set the air flow rate referring to the following values: minimum CO_2 value for G25: 9.58% (8.85% if the burner is set at its minimum output) with single stage models or during low fire operation on hi-lo flame or fully modulating burners.

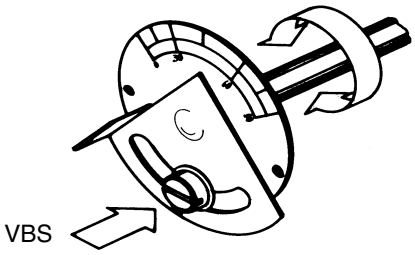

Fig. 48

Burners with single stage operation

- Slacken the screw VBS shown in Fig. 48 by means of a screwdriver; set the desired air flow rate by adjusting directly the damper.
- On final adjustment tight the screw VBS.

Burners with fully modulating or progressive operation

During the test in the factory, the gas throttle valve, air damper in low flame operation and the servocontrol are set to average values.

To recalibrate the burner on site, proceed as follows.

1 Switch on the burner and drive it to high-flame (servocontrol position = 90°).

Adjust the gas flow rate to the required figure by adjusting the pressure governor or the valve regulator. To adjust the air flow rate (Fig. 53) slacken the screw RA and rotate the screw VRA (clockwise rotation increases air flow, anticlockwise rotation decreases it) until the desired flow rate is obtained.

N.B.: at the end of settings remember to tight the screw RA.

2 Drive the burner to low flame. If it should be necessary to adjust burner capacity at low flame move the servocontrol cam accordingly (Page 25).

3 Adjust the gas flow rate in the low-flame position (same position as the ingition) by means of the adjustable screws V (Fig. 53), to change the opening angle of the throttle valve (Fig. 52); rotate clockwise to increase the flow rate or anticlockwise to decrease it.

4 Turn off the burner and turn it on again. If the gas flow rate needs further regulations, repeat operations at step 3.

Fully modulating burners

To set the gas flow rate in low flame and in the intermediate points, proceed as follows.

5 Push the button EXIT on the modulator device (Fig. 57) for a time of 5 seconds; when the led with the hand simbol lights, use the arrow keys to drive the servocontrol to the maximum opening position and, stopping the movement at each screw V, use the one corresponding to the bearing to set the gas flow rate.

6 Push the EXIT button to exit the manual operation mode.

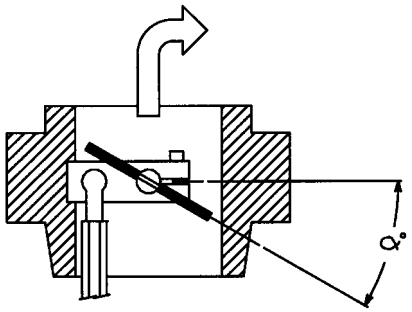

Fig. 52

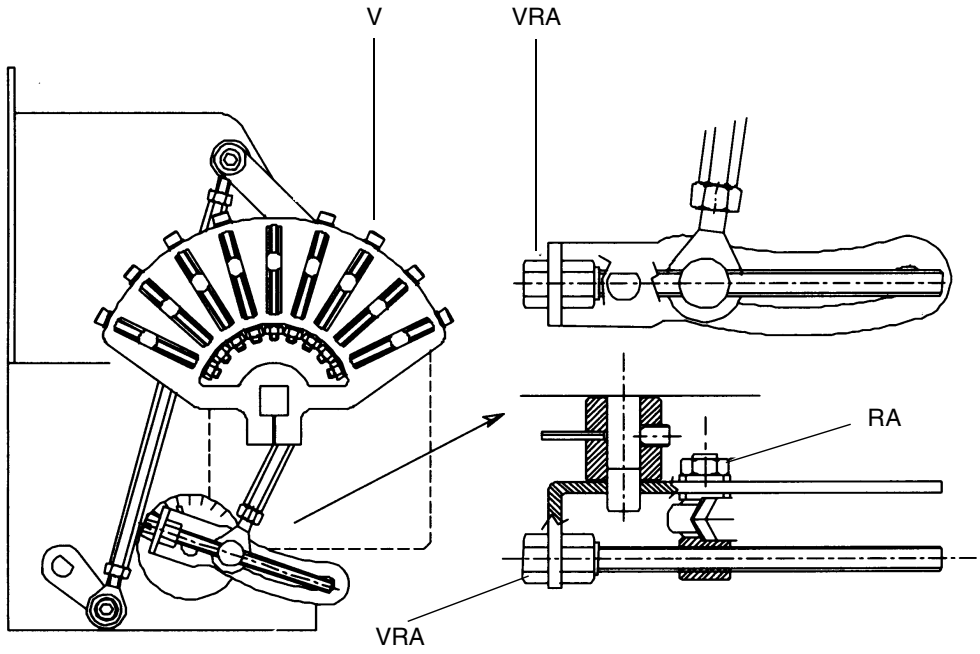

Fig. 53

Double-stage burners

9 drive the burner to the low flame stage by means of the **TAB** thermostat;

10 In order to change the gas flow rate slacken the nuts **DB** (Fig. 24) and adjust the opening angle of the gas butterfly valve by rotating the rod **TG** (clockwise rotation increases gas flow, anticlockwise rotation decreases it). The slot on the butterfly valve shaft shows the opening degree of the valve regardingthe horizontal axis (Fig. 24).

NOTE: At the end of settings, make sure the locking screws **RA** and **DB** are fully tightened.

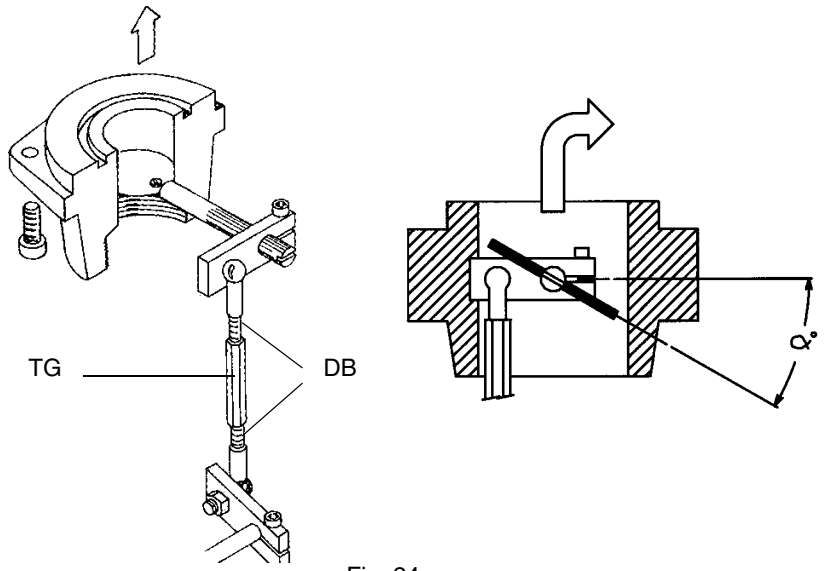

Fig. 24

11 Now adjust the pressure switches (see page 27).

12 If it is necessary to change the burner output in the low flame stage, move the low flame cam: the low flame position matches the ignition position. As far as burners fitted with Dungs MBC gas valves, the low flame cam does not match the ignition cam position, that is why it must be set at about 30° more than the ignition cam.

13 Turn the burner off and then start it up again. If the adjustment is not correct, repeat the previous steps.

Berger STA6 B 3.41 (high-low flame burners)

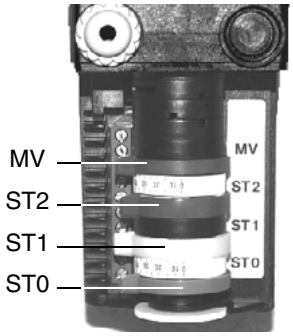

Siemens SQN72.2A4Axx (high-low flame burners)

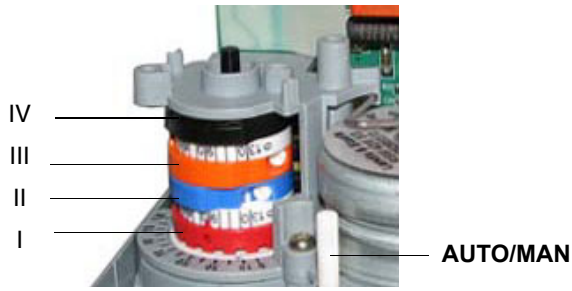

For DUNGS MB-DLE / Siemens VGD gas valves	Actuator camsBerger STA	Siemens SQN72
High flame position (set to 90°)	ST2	I (red)
Low flame and ignition position	ST1	III (orange)
Stand-by position (set to 0°)	ST0	II (blue)
Not used	MV	IV (black)

For DUNGS MBCgas valves	Actuator camsBerger STA	Siemens SQN72
High flame position (set to 90°)	ST2	I (red)
Stand-by position (set to 0°)	ST0	III (orange)
Ignition	ST1	II (blue)
Low flame position	MV	IV (black)

Berger STA12: a key is provided to move the cams.

Siemens SQN72: a key is provided to move cams I and IV, the other cams can be moved by means of screws.

On the BERGER STA12B3.41 actuator, the manual air damper control is not provided. On the Siemens actuator the AUTO/MAN mode is provided (see picture).

Progressive burners

Once the procedure till step 8 described on paragraph “Adjusting procedure” on page 22, is accomplished, go on as follows:

9 set the low flame cam matching the high flame cam;

10 set the **TAB** thermostat to the minimum in order that the actuator moves progressively towards the low flame position;

The manual air damper control is not provided on these actuators. The adjustments must be carried out acting manually on the cams.

Berger STA12B3.41 (progressive and fully modulating burners)

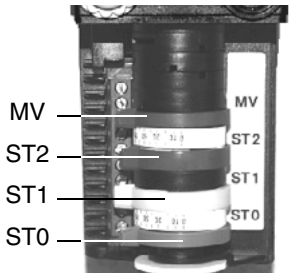

Siemens SQN72.4A4Axx (progressive and fully modulating burners)

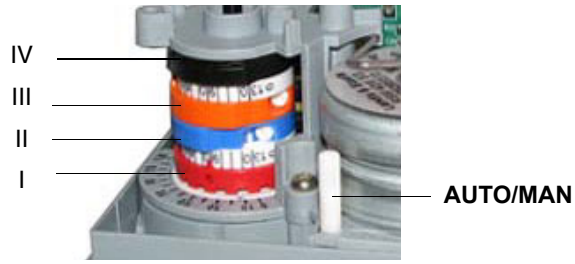

For DUNGS MB-DLE / Siemens VGD gas valves	Actuator camsBerger STA	Siemens SQN72
High flame position (set to 90°)	ST2	I (red)
Low flame and ignition position	ST1	III (orange)
Stand-by position (set to 0°)	ST0	II (blue)
Not used	MV	IV (black)

For DUNGS MBCgas valves	Actuator camsBerger STA	Siemens SQN72
High flame position (set to 90°)	ST2	I (red)
Stand-by position (set to 0°)	ST0	III (orange)
Ignition	ST1	II (blue)
Low flame position	MV	IV (black)

IBerger STA12: a key is provided to move the cams.

Siemens SQN72: a key is provided to move cams I and IV, the other cams can be moved by means of screws.

On the BERGER STA12B3.41 actuator, the manual air damper control is not provided. On the Siemens actuator the AUTO/MAN mode is provided (see picture).

11 move the low flame cam to the minimum to move the actuator towards the low flame until the two bearings find the adjusting screw that refers to the lower position: screw **V** to increase the rate, unscrew to decrease.

12 Move again the low flame cam towards the minimum to meet the next screw on the adjusting cam and repeat the previous step; go on this way as to reach the desired low flame point.

13 Now adjust the pressure switches (see page 27).

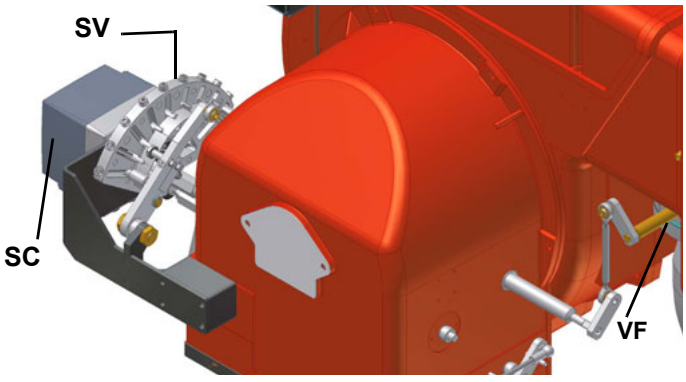

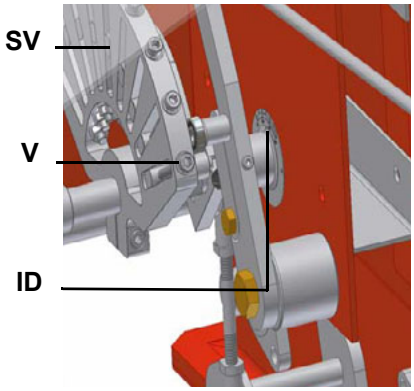

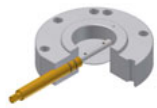

Gas butterfly valve closed

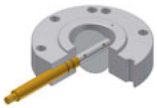

Gas butterfly valve open

14 If it is necessary to change the burner output in the low flame stage, move the low flame cam: the low flame position matches the ignition position. As far as burners fitted with Dungs MBC gas valves, the low flame cam does not match the ignition cam position, that is why it must be set at about 30° more than the ignition cam.

15 Turn the burner off and then start it up again. If the adjustment is not correct, repeat the previous steps.

Calibration of air pressure switch (single stage burners)

Calibration is carried out as follows:

- Remove the transparent plastic cap.
- After air and gas setting have been completed, start the burner.
- The pre-purge phase starts; wait 10 sec. then slowly turn the adjusting ring nut VR in the clockwise direction until the burner lockout, read the value on the pressure switch scale and reduce it by 0.5 mbar.
- Repeat the start up cycle of the burner and check it runs properly.
- Refit the transparent plastic cover on the pressure switch.

Calibration of air pressure switch (double stage and fully modulating burners)

Calibration is carried out as follows:

- Remove the transparent plastic cap.
- After air and gas setting have been completed, start the burner.
- The pre-purge phase starts; wait 10 sec. then slowly turn the adjusting ring nut VR in the clockwise direction until the burner lockout, read the value on the pressure switch scale and reduce it by 15%.
- Repeat the ignition cycle of the burner and check it runs properly.
- Refit the transparent plastic cover on the pressure switch.

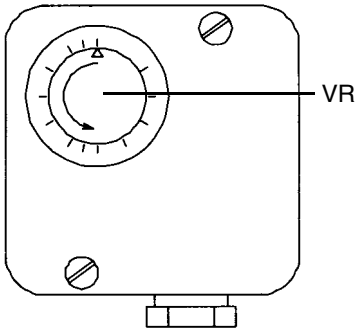

Fig. 55

Calibration of minimum gas pressure switch

Calibration is carried out as follows:

- Remove the transparent plastic cap.
- With the burner in operation test the pressure on the pressure port at the input of the gas filter; slowly close the manual shut-off valve (see gas train installation diagram) until the detected pressure is reduced by 50%.
- Verify CO emissions of the burner; if the measured value is less than 80 ppm screw down the adjusting ring nut until the burner lockout. If CO emissions are greater than 80 ppm open the shut off valve until the CO value is reduced to 80 ppm, then screw down the adjusting ring nut until the burner lockout.
- Fully open the manual shut-off valve ⚠ **WARNING: carry out this operation ONLY with the burner turned off!**
- Refit the transparent plastic cover on the pressure switch.

Calibrating the maximum gas pressure switch

The high gas pressure switch is mounted on the burner near to the throttle valve and is connected to it by a copper tube. Calibration is carried out as follows:

- Remove the transparent plastic cap.
- Drive the burner to maximum output.
- Rotate slowly the adjustment ring nut VR clockwise, until the burner stops.
- Rotate the adjustment ring nut slightly back (increase the value indicated on the scale nut after rotation, by 30%).
- Turn on the burner and verify it operates correctly; if it shuts-off, turn back the setting knob again.
- Refit the transparent plastic cover on the pressure switch.

Adjusting the combustion head

The burner is adjusted in the factory with the combustion head in the "MAX" position, corresponding to the maximum power. To operate the burner at a lowest strenght, progressively shift back the combustion head, toward the "MIN" position, rotating the screw VRT clockwise.

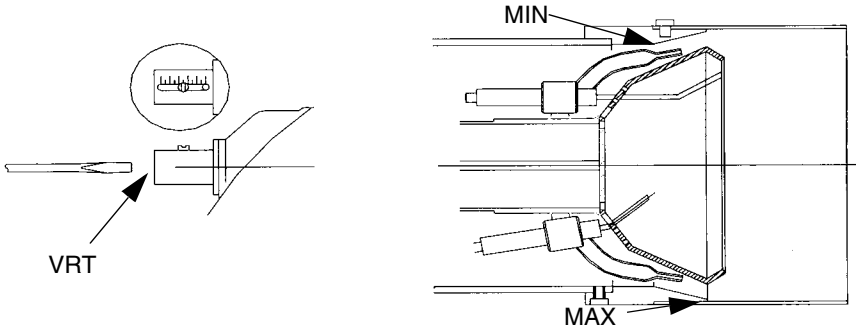

Fig. 56

PART II: OPERATION MANUAL

LIMITATIONS OF USE

THE BURNER IS AN APPLIANCE DESIGNED AND CONSTRUCTED TO OPERATE ONLY AFTER BEING CORRECTLY CONNECTED TO A HEAT GENERATOR (E.G. BOILER, HOT AIR GENERATOR, FURNACE, ETC.), ANY OTHER USE IS TO BE CONSIDERED IMPROPER AND THEREFORE DANGEROUS.

THE USER MUST GUARANTEE THE CORRECT FITTING OF THE APPLIANCE, ENTRUSTING THE INSTALLATION OF IT TO QUALIFIED PERSONNEL AND HAVING THE FIRST COMMISSIONING OF IT CARRIED OUT BY A SERVICE CENTRE AUTHORISED BY THE COMPANY MANUFACTURING THE BURNER.

A FUNDAMENTAL FACTOR IN THIS RESPECT IS THE ELECTRICAL CONNECTION TO THE GENERATOR'S CONTROL AND SAFETY UNITS (CONTROL THERMOSTAT, SAFETY, ETC.) WHICH GUARANTEES CORRECT AND SAFE FUNCTIONING OF THE BURNER.

THEREFORE, ANY OPERATION OF THE APPLIANCE MUST BE PREVENTED WHICH DEPARTS FROM THE INSTALLATION OPERATIONS OR WHICH HAPPENS AFTER TOTAL OR PARTIAL TAMPERING WITH THESE (E.G. DISCONNECTION, EVEN PARTIAL, OF THE ELECTRICAL LEADS, OPENING THE GENERATOR DOOR, DISMANTLING OF PART OF THE BURNER).

NEVER OPEN OR DISMANTLE ANY COMPONENT OF THE MACHINE.

OPERATE ONLY THE MAIN SWITCH, WHICH THROUGH ITS EASY ACCESSIBILITY AND RAPIDITY OF OPERATION ALSO FUNCTIONS AS AN EMERGENCY SWITCH, AND ON THE RESET BUTTON.

IN THE EVENT OF REPEATED LOCKOUTS, DO NOT PERSIST WITH THE RESET BUTTON AND CONTACT QUALIFIED PERSONNEL WHO WILL PROCEED TO ELIMINATE THE MALFUNCTION.

WARNING: DURING NORMAL OPERATION THE PARTS OF THE BURNER NEAREST TO THE GENERATOR (COUPLING FLANGE) CAN BECOME VERY HOT, AVOID TOUCHING THEM SO AS NOT TO GET BURNT

OPERATION

- Bring to the ON position the mains switch A on the burner electrical board front panel.
- Check the flame control device is not in the lockout position (light B on), if necessary reset it by means of the pushbutton C (reset);
- Verify that the control thermostats or pressure switches give the consent to the burner to operate.
- Check the gas supply pressure is sufficient (light D on).

Only burners equipped with leakage control device: the check cycle of the leakage control device starts; the completion of this check is signalled by the light of the lamp on the device. When the valves check is finished, the start up cycle of the burner begins. In the case of a leak in a valve, the leakage control device locks and the lamp E lights.

To reset the device operate on the device pushbutton.

- When the startup cycle begins, the servocontrol drives the air damper to the maximum opening position, the fan motor starts and the pre-purgue phase begins.

During the pre-purgue phase, the complete opening of the air damper is signalled by the lamp F on the frontal panel of the electrical board.

- At the end of the pre-purgue phase, the air damper goes to the ignition position, the ignition transformer comes on (signalled by the lamp H) and 3 seconds later the solenoid valves EV1 and EV2 are energized (lights L and I on the front panel).
- 3 seconds after the opening of the valves, the ignition transformer comes off and the lamp H turns off; subsequently:

Single stage burners: the burner is on at the maximum power; the lights F and G are on;

High-low flame burners: the burner is on in low flame (light G is on); 8 seconds later the high flame operation begins and the burner switches automatically to high flame (light F is on) or remains in low flame operation, depending on the plant needs.

Fully modulating burners: after the posted time the modulating operation begins and the burner is driven by the modulator (P), depending on the needs of the plant; the light F is on until the modulator drives the burner to a rise of power.

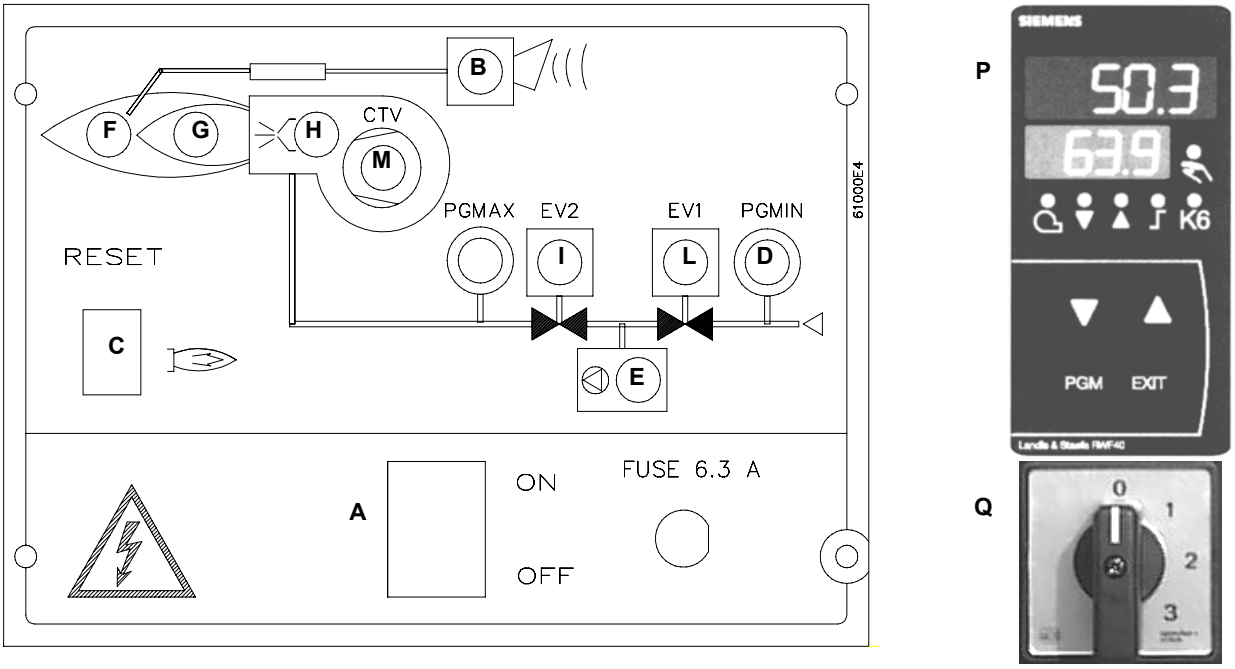

Fig. 57 - Electrical board front panel

Key

A main switch on-off
B lockout indicator light
C reset pushbutton for flame control device
D gas pressure switch consent indicator light
E leakage control device lockout indicator light (only on burners with leakage control device)
F high flame operation indicator light (or air damper open during pre-purgue phase)
G low flame operation indicator light
H ignition transformer operation indicator light
I valve in operation indicator light for EV2
L valve in operation indicator light for EV1
M indicator light for fan motor overload tripped (only three-phase burners); to reset the overload tripped, open the electrical board.
P modulator (fitted only on fully modulating burners)
Q operation manual selector: 0) stop - 1) high flame - 2) low flame - 3) automatic

PART III: MAINTENANCE MANUAL

At least once a year carry out the maintenance operations listed below. In the case of seasonal servicing, it is recommended to carry out the maintenance at the end of each heating season; in the case of continuous operation the maintenance is carried out every 6 months.

WARNING: All operations on the burner must be carried out with the mains disconnected!

PERIODICAL OPERATIONS

- Cleaning and examining the gas filter cartridge, if necessary replace it; (see on Page 22);
- Removal, examination and cleaning of the combustion head (see Fig. 58 - Fig. 59);
- Check of ignition electrode, cleaning, adjustment and, if necessary, replacement (see Fig. 60 - Fig. 61);
- Check of detection electrode, cleaning, adjustment and, if necessary, replacement (see Fig. 60 - Fig. 61); if in doubt check the detection circuit as shown in Fig. 62 - Fig. 63, with the burner in operation;
- Cleaning and greasing sliding and rotating parts.

NOTE: The check on the ignition and detection electrodes is carried out after removing the combustion head.

Removal of the combustion head

Fig. 58 - Burners P20 - P30 - P45 - P50

- Remove the lid C.
- Unscrew the 2 screws S which hold in position the washer, unscrew then the screw VRT, to free the threaded rod AR.
- Unscrew the screws V which lock the gas manifold G and extract the complete unit as shown in the figure.

Note: for subsequent assembly carry out the above described operations in the reverse order, having care to keep the OR ring in the correct position.

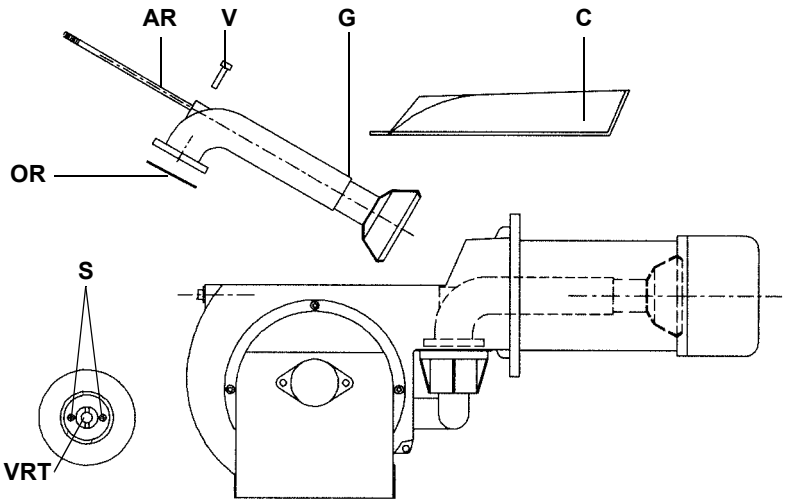

Fig. 58

Fig. 59 - Burners P65

- Remove the lid C.
- Unscrew the 2 screws V which hold in position the washer G and remove the complete set as shown in figure.

Note: for subsequent assembly carry out the above described operations in the reverse order, having care to keep the OR ring in the correct position.

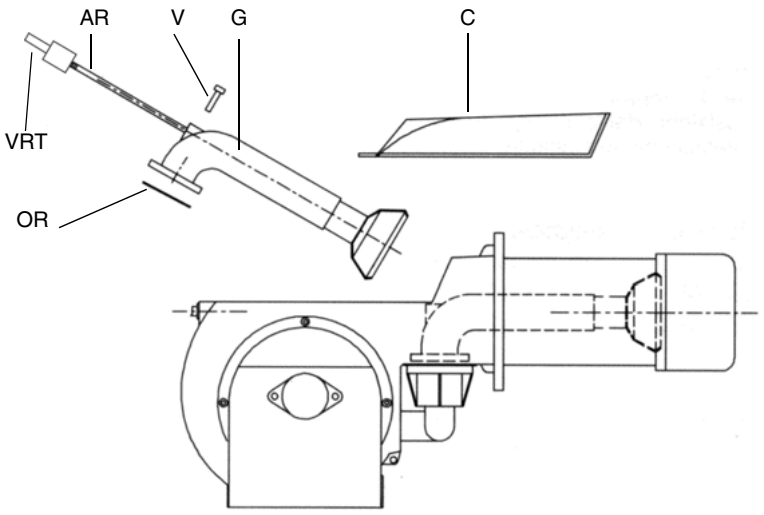

Fig. 59

Fig. 60 - Electrodes position setting P20 - P30 - P45

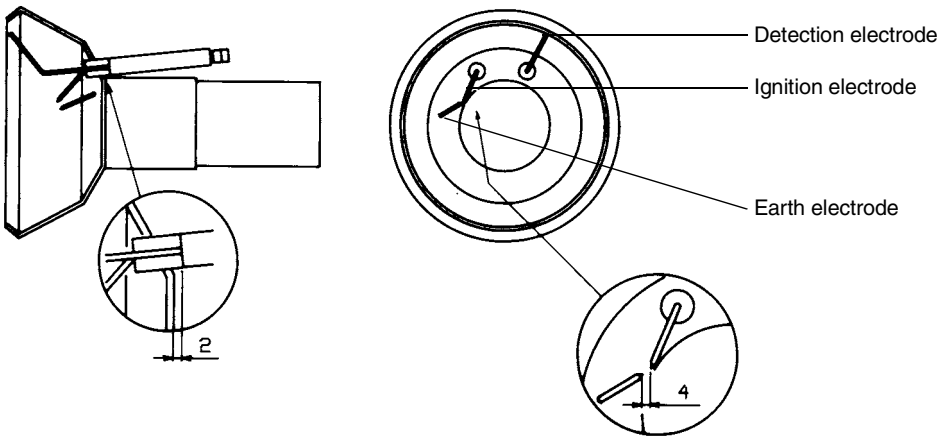

Fig. 61 - Electrodes position setting P50 - P65

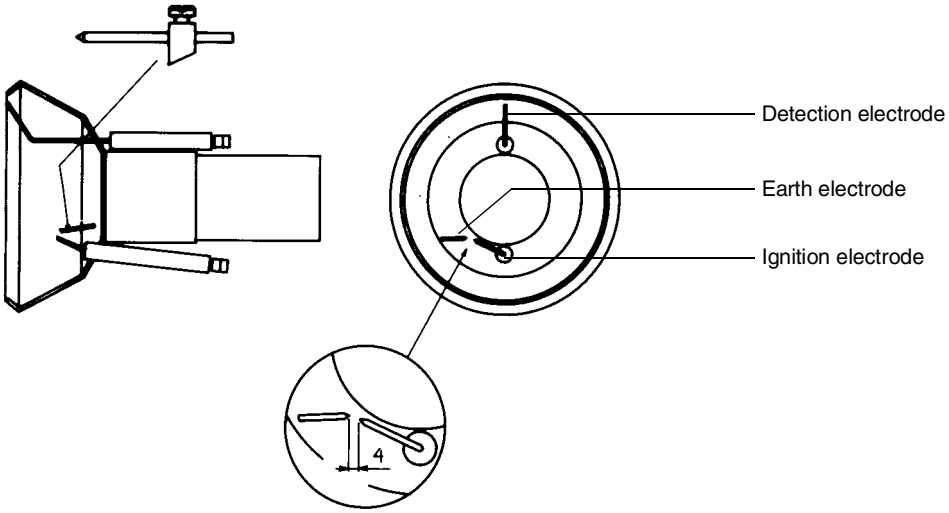

Check of ionisation current

To measure the detection signals refer to the diagrams in Fig. 62 - Fig. 63. If the signal is less than the value shown, check the position of the detection electrode, the electrical contacts and if necessary replace the detection electrode.

Fig. 62

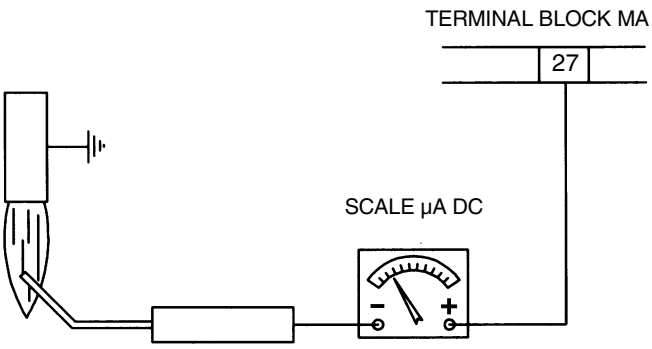

Fig. 63

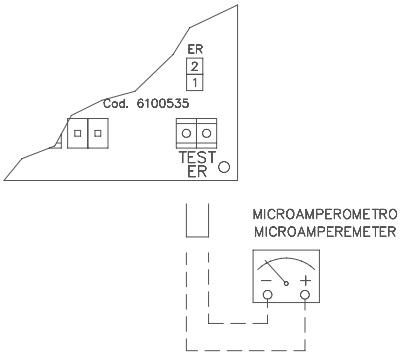

Flame control device	Minimum detection signal
Siemens LME21-22	3 µA

If the power supply to the burner is 230V three-phase or 230V phase-phase (without a neutral), with the Landis LGB2... o LMG2... flame control device, between the terminal 2 on the board and the earth terminal, an RC Landis RC466890660 filter must be inserted

Key
C - Capacitor (22nF/250V)
LGB - LMG - Landis flame control device
R - Resistor (1Mohm)
RC466890660 - RC Landis filter

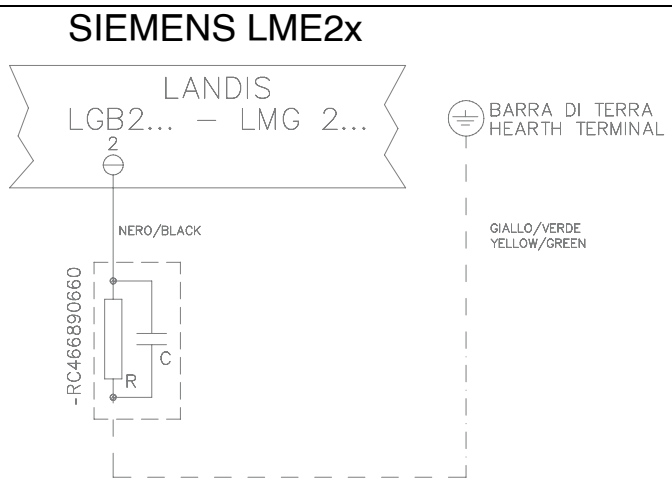

Fig. 64

TROUBLESHOOTING

CAUSE / FAULT	BURNER DOESN'T START	CONTINUE PRE-PURGUE	BURNER DOESN'T START AND LOCKS	BURNER DOESN'T START AND REPEATS THE CYCLE	BURNER STARTS AND REPEATS THE CYCLE	BURNER DOESN'T SWITCH TO HIGH FLAME	BURNER'S LOCKOUT DURING OPERATION	BURNER STOPS AND REPEATS CYCLE DURING OPERATION	BURNER'S LOCKOUT AFTER START	THE FLAME CONTROL DEV. REPEATS THE CYCLE WITHOUT GIVE CONSENT
MAINS SWITCH OPEN	●									
ABSENCE OF GAS	●									
MINIMUM GAS PRESSURE SWITCH FAULT OR BAD SETTING	●			●	●			●		
BOILER THERMOSTATS OPEN	●									
OVERLOAD TRIPPED INTERVENTION	●									
FUSES INTERVENTION	●									
AIR PRESSURE SWITCH FAULT OR BAD SETTING	●		●				●			●
DEFECTIVE FLAME CONTROL DEVICE	●	●	●				●			
DEFECTIVE AIR DAMPER SERVOCONTROL		●								
DEFECTIVE IGNITION TRANSFORMER			●							
IGNITION ELECTRODE WRONG POSITION			●							
BUTTERFLY VALVE BAD SETTING			●							
DEFECTIVE GAS GOVERNOR			●	●	●			●		
DEFECTIVE HI-LO FLAME THERMOSTAT						●				
SERVOCONTROL CAM BAD SETTING						●				
DETECTION ELECTRODE BAD POSITION OR DEFECTIVE DETECTION CIRCUIT							●		●	
REVERSED PHASE AND NEUTRAL CONNECTION									●	
PHASE-PHASE SUPPLY OR PRESENCE OF VOLTAGE ON NEUTRAL*									●	

* In this case insert an RC filter (see Fig. 64)

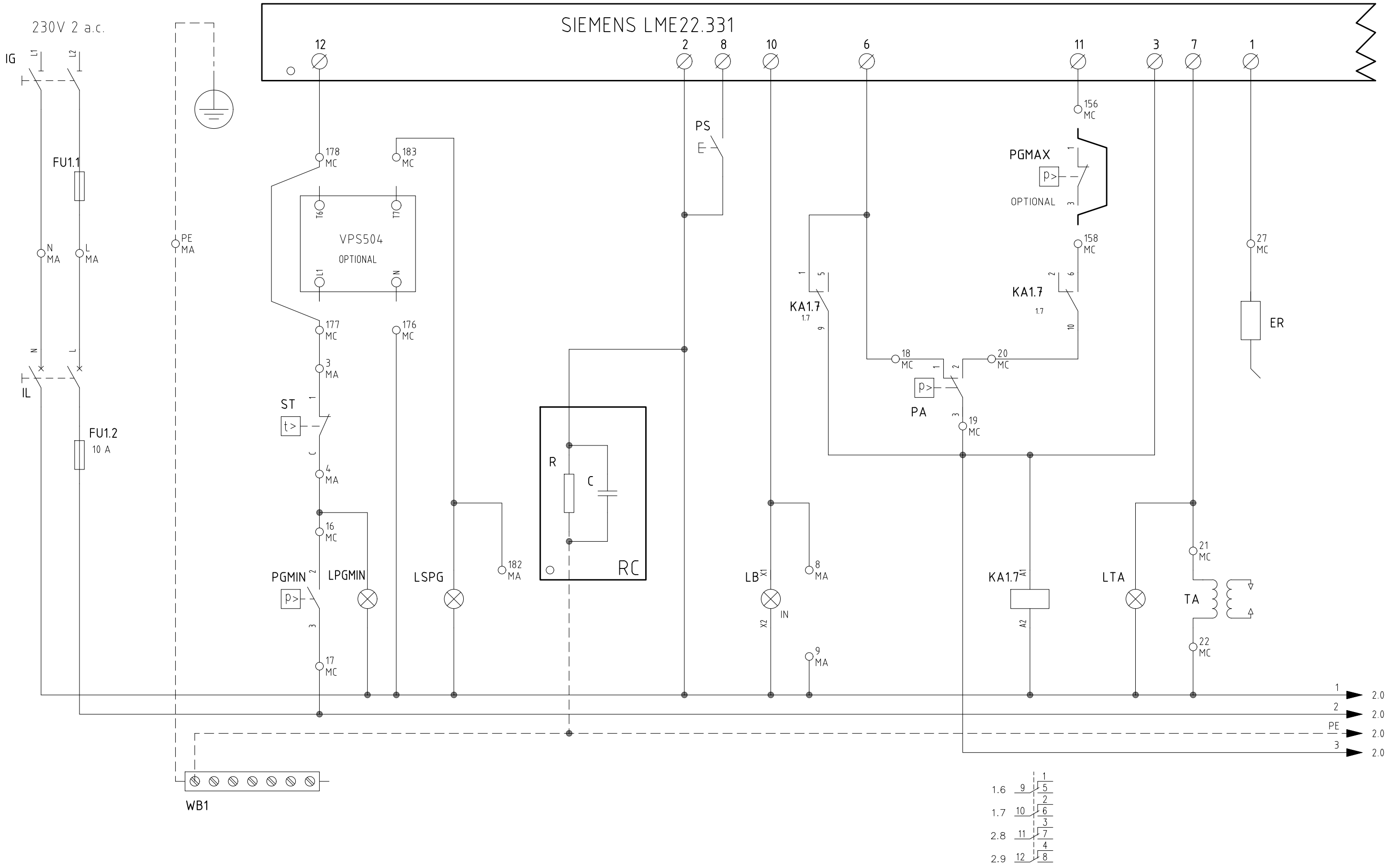

REV.	MODIFICA	DATA	FIRME
02	ADDED PREDISPOSITION "PGMAX"	19/09/17	U. PINTON
01	AGGIUNTO/ADDED SQN72.xxx	29/08/11	U. PINTON

UNIGAS

Impianto

TIPI/TYPES P20/P30
MODELLO/MODEL x–.AB(PR).x.xx.Y.x.xx

Descrizione

CON PILOTA; POST–VENTILAZ. TEMPORIZZ.; "PGMAX"
WITH GAS PILOT; DELAYED POST–PURGE; "PGMAX"

Ordine		Data 05/12/2003	PREC.	FOGLIO
Commessa	Data Controllato 19/09/2017	Revisione 02	/	1
Esecutore U. PINTON	Controllato T. BARALDO	Dis. N. 04 – 0720	SEGUE 2	TOTALE 4

LME22.331

4 5 9

SIEMENS SQN30.x51A
N 8 1 2 7 5 6 4 3

BERGER STAxB3.41/63N32L
N 8 1 2 7 5 6 4 3

BERGER STA4.5B0.37/63N30L
6 2 7 8 9 1 3 5 4

SIEMENS SQN72.xA4A20
N 8 4 5 1 2 3 6 7

(×)
(××)

189 MA
CFP
t>
1
3
190 MA

270 MC 271 MC 272 MC 273 MC 274 MC 275 MC 276 MC 277 MC 278 MC

141 MC
142 MC
25 MC
26 MC

A1 A2
EVP1 EVP2 LBF KA2.2 EV1 EV2 LEV1 LEV2 LAF

7 MA 5 MA
TAB
t>
6 MA

KA1.7
1.7
3 7
11
KT2.8
2.8
4 8
12
KA1.7
1.7
U MC V MC
MV
M
1 ~
KT2.8 A1
A2 5min;
MOTORE VENTILATORE
FAN MOTOR

1.9 1
1.9 2
1.9 PE
1.9 3

10 MA
KA2.2
2.2
1 5
9
11 MA
2.2 9 1 5 12 4 8

2.8

Data 05/12/2003		PREC. 1	FOGLIO 2
Revisione 02			
Dis. N. 04 – 0720		SEGUE 3	TOTALE 4

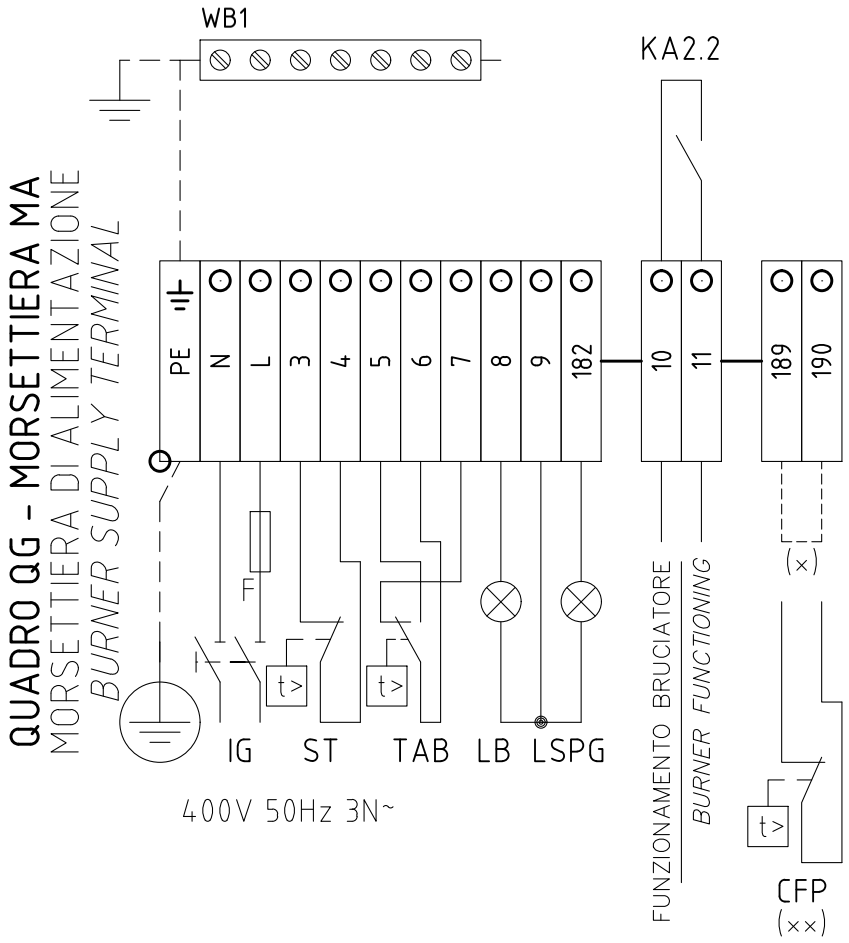

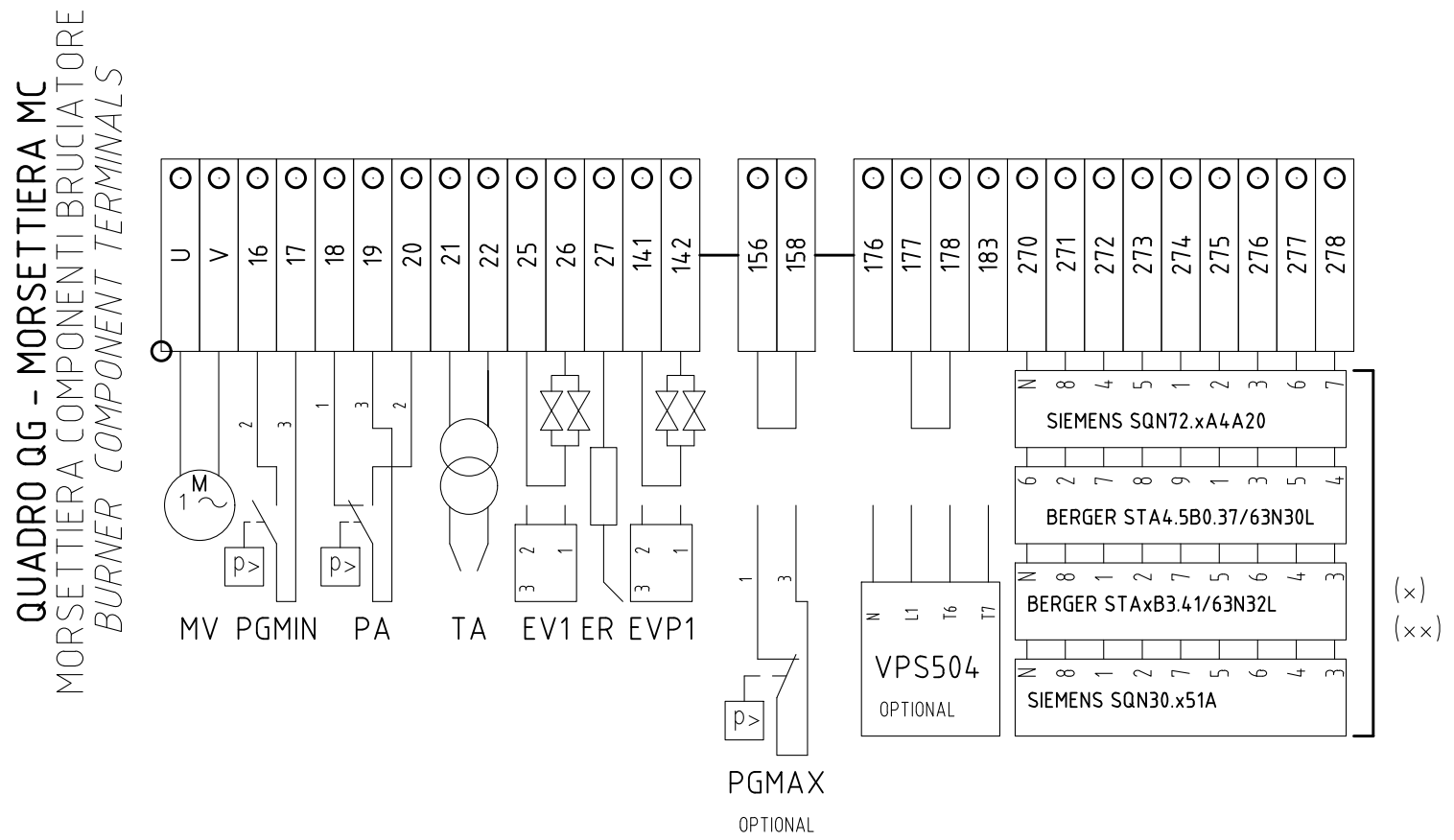

NOTE :
MARKS :

(x) SE "CFP" NON E' USATO, PONTICELLARE I MORSETTI 189-190. E REGOLARE LA CAMMA AUSILIARIA ("IV-SQN72","III-STA4.5"; "MV-STAx"; "V-SQN30") IN UNA POSIZIONE 5° > ALLA CAMMA DI BASSA FIAMMA. (ES.: BASSA FIAMMA = 20°; CAMMA AUSILIARIA TARATA A 25°)

(xx) SE "CFP" INVECE E' USATO, REGOLARE LA CAMMA AUSILIARIA ("IV-SQN72","III-STA4.5"; "MV-STAx"; "V-SQN30") = 0° .

(x) IF "CFP" IS NOT USED, INSERT BRIDGE BETWEEN TERMINALS 189-190. AND SET TO THE AUXILIARY CAM ("IV-SQN72","III-STA4.5"; "MV-STAx"; "V-SQN30") IN THE POSITION > OF 5° TO LOW FLAME CAM. (EX.: LOW FLAME CAM = 20° ; SET THE AUXILIARY CAM TO 25°)

(xx) IF "CFP" IS USED, SET THE AUXILIARY CAM ("IV-SQN72","III-STA4.5"; "MV-STAx"; "V-SQN30") = 0° .

SERVOCOMANDO SERRANDA ARIA
AIR DAMPER ACTUATOR
SIEMENS SQN72.xA4A20

I (ROSSO)	ALTA FIAMMA
I (RED)	*HIGH FLAME*
II (BLU)	SOSTA
II (BLUE)	*STAND-BY*
III (ARANCIO)	BASSA FIAMMA
III (ORANGE)	*LOW FLAME*
IV (NERO)	CAMMA AUSILIARIA APERTURA EV1, EV2
IV (BLACK)	*AUXILIARY CAM FOR OPENED EV1, EV2*

SERVOCOMANDO SERRANDA ARIA (ALTERNATIVO)
AIR DAMPER ACTUATOR (ALTERNATIVE)
BERGER STA4.5B0.37/63N30L

I	ALTA FIAMMA
	HIGH FLAME
II	SOSTA
	STAND-BY
IV	BASSA FIAMMA
	LOW FLAME
III	CAMMA AUSILIARIA APERTURA EV1, EV2
	AUXILIARY CAM FOR OPENED EV1, EV2

SERVOCOMANDO SERRANDA ARIA (ALTERNATIVO)
AIR DAMPER ACTUATOR (ALTERNATIVE)
BERGER STAxB3.41/63N32L

ST2	ALTA FIAMMA
	HIGH FLAME
ST0	SOSTA
	STAND-BY
ST1	BASSA FIAMMA
	LOW FLAME
MV	CAMMA AUSILIARIA APERTURA EV1, EV2
	AUXILIARY CAM FOR OPENED EV1, EV2

SERVOCOMANDO SERRANDA ARIA (ALTERNATIVO)
AIR DAMPER ACTUATOR (ALTERNATIVE)
SIEMENS SQN30.x51A

I	ALTA FIAMMA
	HIGH FLAME
II	SOSTA
	STAND-BY
III	BASSA FIAMMA
	LOW FLAME
V	CAMMA AUSILIARIA APERTURA EV1, EV2
	AUXILIARY CAM FOR OPENED EV1, EV2

Data 05/12/2003		PREC. 2	FOGLIO 3
Revisione 02			
Dis. N. 04 – 0720		SEGUE 4	TOTALE 4

Sigla/Item	Foglio/Sheet	Funzione	Function
BERGER STA4.5B0.37/63N30L	2	SERVOCOMANDO SERRANDA ARIA (ALTERNATIVO)	AIR DAMPER ACTUATOR (ALTERNATIVE)
BERGER STAxB3.41/63N32L	2	SERVOCOMANDO SERRANDA ARIA (ALTERNATIVO)	AIR DAMPER ACTUATOR (ALTERNATIVE)
C	1	CONDENSATORE	CAPACITOR
CFP	2	TERMOSTATO O PRESSOSTATO FIAMMA PILOTA	PILOT FLAME THERMOSTAT OR PRESSURE SWITCHES
ER	1	ELETTRODO RIVELAZIONE FIAMMA	FLAME DETECTION ELECTRODE
EV1	2	ELETTROVALVOLA GAS LATO RETE (O GRUPPO VALVOLE)	GAS ELECTRO-VALVE UPSTREAM (OR VALVES GROUP)
EV2	2	ELETTROVALVOLA GAS LATO BRUCIATORE (O GRUPPO VALVOLE)	GAS ELECTRO-VALVE DOWNSTREAM (OR VALVES GROUP)
EVP1	2	ELETTROVALVOLA GAS PILOTA LATO RETE (O GRUPPO VALVOLE)	PILOT GAS ELECTRO-VALVE UPSTREAM (OR VALVES GROUP)
EVP2	2	ELETTROVALVOLA GAS PILOTA LATO BRUCIATORE (O GRUPPO VALVOLE)	PILOT GAS ELECTRO-VALVE DOWNSTREAM (OR VALVES GROUP)
FU1.1	1	FUSIBILE LINEA AUSILIARI	AUXILIARY LINE FUSE
FU1.2	1	FUSIBILE	FUSE
IG	1	INTERRUTTORE GENERALE	MAIN DISCONNECTOR
IL	1	INTERRUTTORE LINEA AUSILIARI	AUXILIARY LINE SWITCH
KA1.7	1	RELE'' AUSILIARIO	AUXILIARY RELAY
KA2.2	2	RELE'' AUSILIARIO	AUXILIARY RELAY
KT2.8	2	RELE'' TEMPORIZZATORE	DELAYED RELAY
LAF	2	LAMPADA SEGNALAZIONE ALTA FIAMMA BRUCIATORE	BURNER IN HIGH FLAME INDICATOR LIGHT
LB	1	LAMPADA SEGNALAZIONE BLOCCO BRUCIATORE	INDICATOR LIGHT FOR BURNER LOCK-OUT
LBF	2	LAMPADA SEGNALAZIONE BASSA FIAMMA BRUCIATORE	BURNER IN LOW FLAME INDICATOR LIGHT
LEV1	2	LAMPADA SEGNALAZIONE APERTURA (EV1)	INDICATOR LIGHT FOR OPENING OF ELECTRO-VALVE (EV1)
LEV2	2	LAMPADA SEGNALAZIONE APERTURA (EV2)	INDICATOR LIGHT FOR OPENING OF ELECTRO-VALVE (EV2)
LPGMIN	1	LAMPADA SEGNALAZIONE PRESENZA GAS IN RETE	INDICATOR LIGHT FOR PRESENCE OF GAS IN THE NETWORK
LSPG	1	LAMPADA SEGNALAZIONE BLOCCO CONTROLLO TENUTA VALVOLE	INDICATOR LIGHT FOR LEAKAGE OF VALVES
LTA	1	LAMPADA SEGNALAZIONE TRASFORMATORE DI ACCENSIONE	IGNITION TRANSFORMER INDICATOR LIGHT
MV	2	MOTORE VENTILATORE	FAN MOTOR
PA	1	PRESSOSTATO ARIA COMBURENTE	COMBUSTION AIR PRESSURE SWITCH
PGMAX	1	PRESSOSTATO GAS DI MASSIMA PRESSIONE (OPTIONAL)	MAXIMUM PRESSURE GAS SWITCH (OPTIONAL)
PGMIN	1	PRESSOSTATO GAS DI MINIMA PRESSIONE	MINIMUM GAS PRESSURE SWITCH
PS	1	PULSANTE SBLOCCO FIAMMA	LOCK-OUT RESET BUTTON
R	1	RESISTENZA	RESISTANCE
RC	1	CIRCUITO RC	RC CIRCUIT
SIEMENS LME22.331	1	APPARECCHIATURA CONTROLLO FIAMMA	FLAME MONITOR DEVICE
SIEMENS SQN30.x51A	2	SERVOCOMANDO SERRANDA ARIA (ALTERNATIVO)	AIR DAMPER ACTUATOR (ALTERNATIVE)
SIEMENS SQN72.xA4A20	2	SERVOCOMANDO SERRANDA ARIA	AIR DAMPER ACTUATOR
ST	1	SERIE TERMOSTATI/PRESSOSTATI	SERIES OF THERMOSTATS OR PRESSURE SWITCHES
TA	1	TRASFORMATORE DI ACCENSIONE	IGNITION TRANSFORMER
TAB	2	TERMOSTATO/PRESSOSTATO ALTA-BASSA FIAMMA	HIGH-LOW THERMOSTAT/PRESSURE SWITCHES
VPS504	1	CONTROLLO DI TENUTA VALVOLE GAS (OPTIONAL)	GAS LEAKAGE MONITOR DEVICE (OPTIONAL)
WB1	1	BARRA DI TERRA	EARTH TERMINAL

Data 05/12/2003		PREC. 3	FOGLIO 4
Revisione 02			
Dis. N. 04 – 0720		SEGUE /	TOTALE 4

SPARE PARTS - Burners P20 - P30 M-.TN, M-.AB

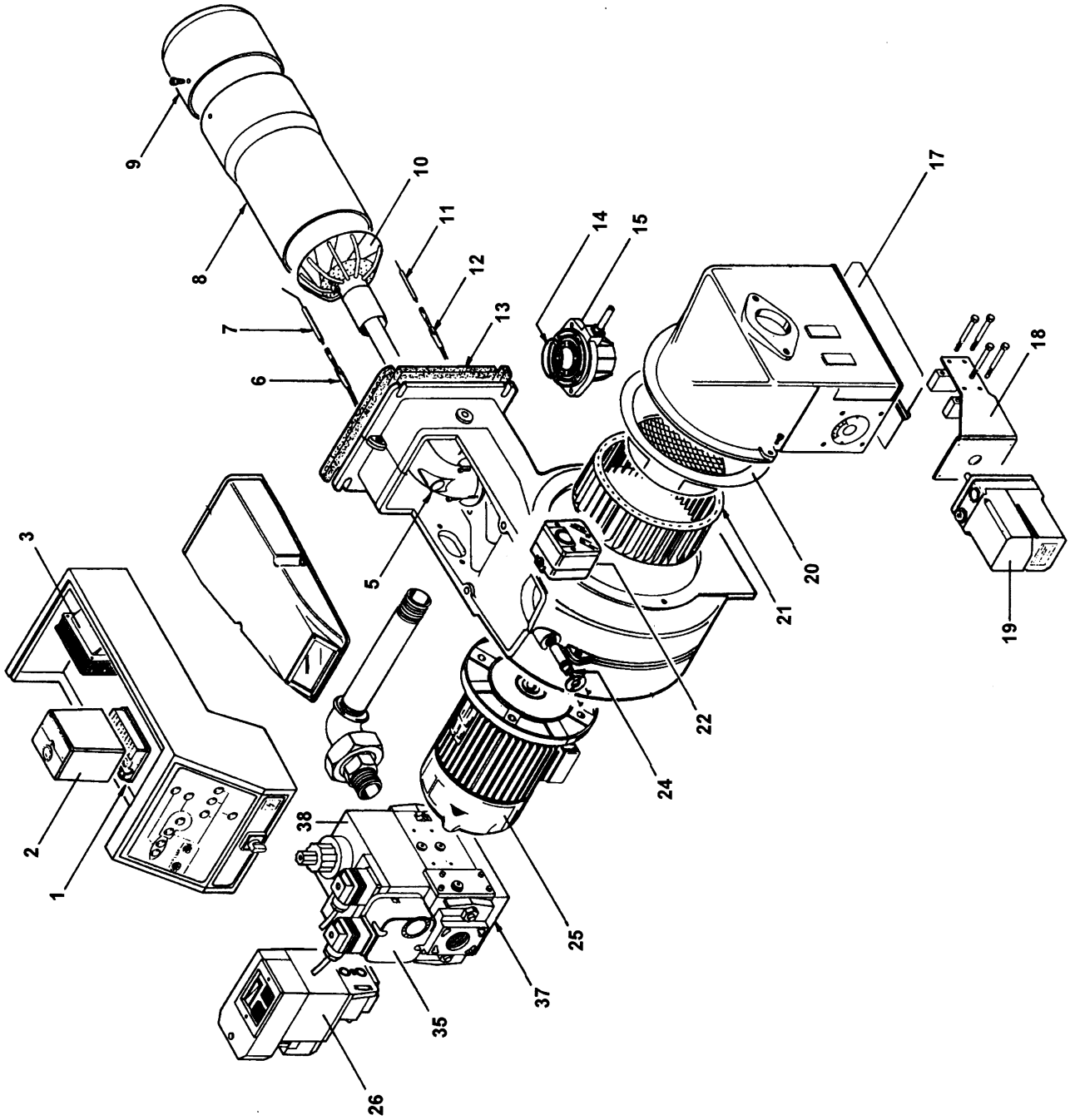

POS.	DESCRIPTION	P20 M-.XX.S.*.A.0.25	P20 M-.XX.L.*.A.0.25	P20 M-.XX.S.*.A.0.40	P20 M-.XX.L.*.A.0.40	P30 M-.XX.S.*.A.0.40	P30 M-.XX.L.*.A.0.40
1	SOCKET FOR FLAME CONTROL DEVICE	2030415	2030415	2030415	2030415	2030415	2030415
2	FLAME CONTROL DEVICE LGB21 (SINGLE STAGE)	2020443	2020443	2020443	2020443	2020443	2020443
2	FLAME CONTROL DEVICE LGB22 (HI-LO FLAME)	2020430	2020430	2020430	2020430	2020430	2020430
2	FLAME CONTROL DEVICE LMG21 (SINGLE STAGE)	2020449	2020449	2020449	2020449	2020449	2020449
2	FLAME CONTROL DEVICE LMG22 (HI-LO FLAME)	2020450	2020450	2020450	2020450	2020450	2020450
3	TANSFORMER	2170128	2170128	2170128	2170128	2170128	2170128
5	MANIFOLD	2740002	2740002	2740002	2740002	2740002	2740002
6	DETECTION CABLE	6050205	6050205	6050205	6050205	6050205	6050205
7	DETECTION ELECTRODE	2080106	2080106	2080106	2080106	2080102	2080102
8	COMPLETE BLAST TUBE	3090096	3090086	3090096	3090086	3090019	3091005
9	BLAST TUBE EXTENSION	---	---	---	---	---	2200046
10	COMBUSTION HEAD	3060073	3060072	3060073	3060072	3060005	3060005
11	IGNITION ELECTRODE	2080209	2080209	2080209	2080209	2080202	2080202
12	IGNITION CABLE	6050108	6050108	6050108	6050108	6050108	6050108
13	GASKET	2110004	2110004	2110004	2110004	2110004	2110004
14	"O" RING	2250001	2250001	2250001	2250001	2250001	2250001
15	THROTTLE VALVE (HI-LO FLAME)	2460221	2460221	2460221	2460221	2460221	2460221
15A	THROTTLE VALVE (SINGLE STAGE)	2460201	2460201	2460201	2460201	2460201	2460201
17	AIR DAMPER	2140005	2140005	2140005	2140005	2140005	2140005
18	SERVOC. SUPPORT BRACKET (HI-LO FLAME)	3050009	3050009	3050009	3050009	3050009	3050009
19	SERVOCONTROL (BERGER, VERS. HI-LO FLAME)	2480057	2480057	2480057	2480057	2480057	2480057
20	INLET CONE	2040016	2040016	2040016	2040016	2040016	2040016
21	FAN	2150006	2150006	2150006	2150006	2150006	2150006
22	AIR PRESSURE SWITCH	2140065	2140065	2140065	2140065	2140065	2140065
24	HEAD ADJUSTING SCREW	2320501	2320501	2320501	2320501	2320501	2320501
25	MOTOR	2180704	2180704	2180704	2180704	2180704	2180704
26	LEAKAGE CONTROL (OPTIONAL)	2191604	2191604	2191604	2191604	2191604	2191604
35	MINIMUM GAS PRESSURE SWITCH	2160052	2160052	2160052	2160052	2160052	2160052
37	MULTIBLOC VALVES GROUP	2190341	2190341	2190342	2190342	2190342	2190342
	PRINTED CIRCUIT	6100535	6100535	6100535	6100535	6100535	6100535
38	MULTIBLOC COIL	2580017	2580017	2580017	2580017	2580017	2580017

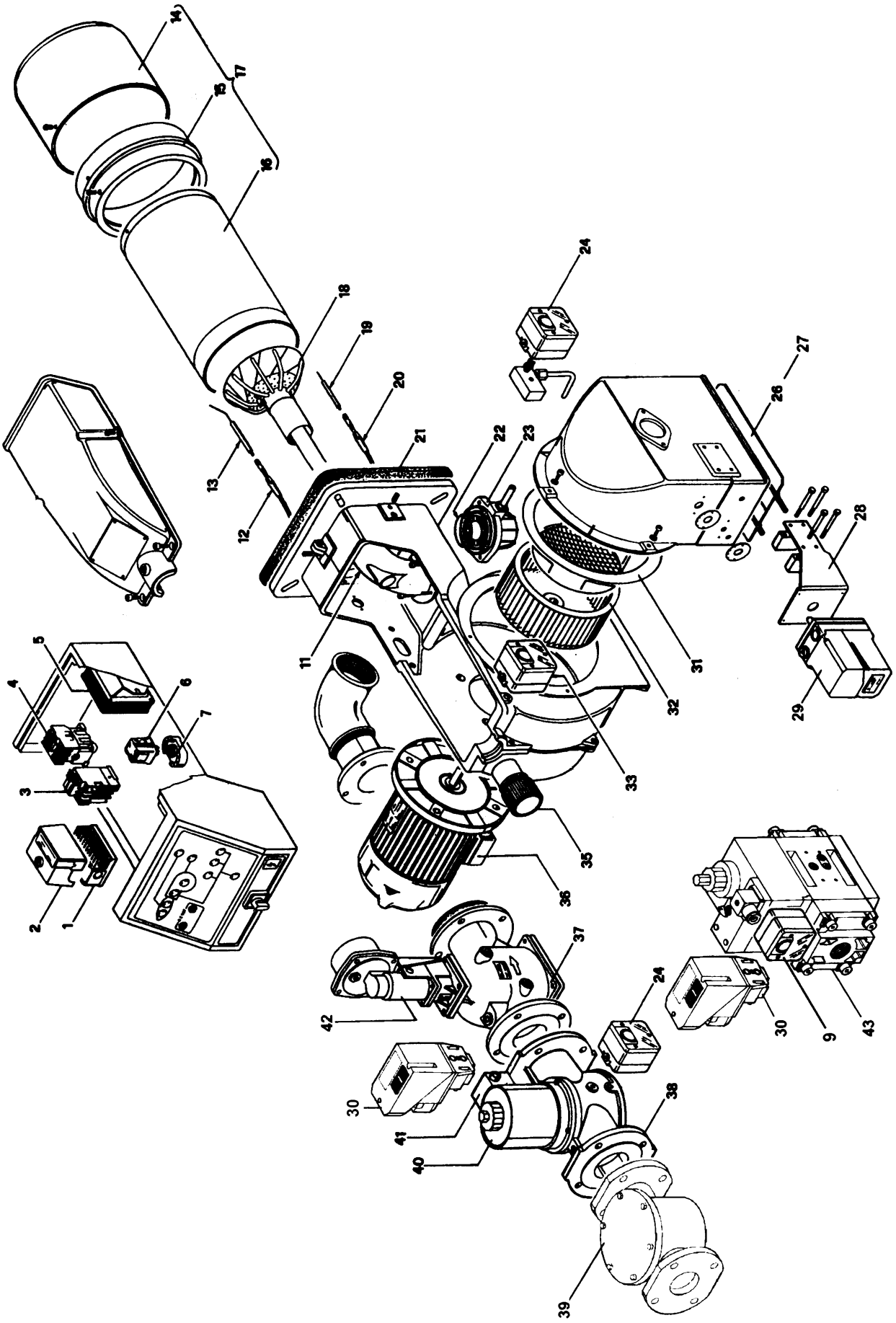
14
17
15
16
18
19
20
21
13
12
22
23
24
27
26
28
11
31
32
29
33
5
4
6
7
3
2
1
35
36
37
42
24
30
9
43
30
38
41
40
39

POS.	DESCRIPTION	P45 M-.TN..S.. .40 M-.TN..L.. .40	P45 M-.TN..S.. .50 M-.TN..L.. .50	P45 M-.AB..S.. .40 M-.AB..L.. .40	P45 M-.AB..S.. .50 M-.AB..L.. .50	P50 M-.TN..S.. .40 M-.TN..L.. .40	P50 M-.TN..S.. .50 M-.TN..L.. .50	P50 M-.TN..S.. .65 M-.TN..L.. .65	P65 M-.AB..S.. .50 M-.AB..L.. .50	P65 M-.AB..S.. .65 M-.AB..L.. .65
1	SOCKET FOR FLAME CONTROL DEVICE	203.04.15	203.04.15	203.04.15	203.04.15	203.04.15	203.04.15	203.04.15	203.04.15	203.04.15
2	CONTROL DEVICE LGB21 (SINGLE STAGE)	202.04.43	202.04.43			202.04.43	202.04.43	202.04.43		
2	CONTROL DEVICE LGB22 (HI-LO FLAME)			202.04.30	202.04.30				202.04.30	202.04.30
2	CONTROL DEVICE LMG21 (SINGLE STAGE)	202.04.49	202.04.49			202.04.49	202.04.49	202.04.49		
2	CONTROL DEVICE LMG22 (HI-LO FLAME))			202.04.50	202.04.50				202.04.50	202.04.50
3	OVERLOAD RELAY	---	---	---	---	614.00.32	614.00.32	614.00.32	614.00.32	614.00.32
4	CONTACTOR	---	---	---	---	613.00.16	613.00.16	613.00.16	613.00.16	613.00.16
5	IGNITION TRANSFORMER	217.01.28	217.01.28	217.01.28	217.01.28	217.01.28	217.01.28	217.01.28	217.01.28	217.01.28
6	RELAY	---	---	---	---	---	---	---	---	---
7	RELAY SOCKET	---	---	---	---	---	---	---	---	---
9	GAS PRESSURE SWITCH	216.00.76	216.00.76	216.00.76	216.00.76	216.00.76	216.00.76	---	216.00.76	---
11	MANIFOLD	274.00.02	274.00.02	274.00.02	274.00.02	274.00.03	274.00.03	274.00.03	274.00.03	274.00.03
12	DETECTION CABLE	605.02.05	605.02.05	605.02.05	605.02.05	605.02.05	605.02.05	605.02.05	605.02.05	605.02.05
13	DETECTION ELECTRODE	208.01.02	208.01.02	208.01.02	208.01.02	208.01.02	208.01.02	208.01.02	208.01.02	208.01.02
14	STANDARD BLAST TUBE EXTENSION	---	---	---	---	220.00.55	220.00.55	220.00.55	220.00.55	220.00.55
14	LONG BLAST TUBE EXTENSION	220.00.46	220.00.46	220.00.46	220.00.46	220.00.56	220.00.56	220.00.56	220.00.56	220.00.56
15	BLAST TUBE RING	---	---	---	---	247.00.37	247.00.37	247.00.37	247.00.37	247.00.37
16	BLAST TUBE BODY	---	---	---	---	230.00.35	230.00.35	230.00.35	230.00.55	230.00.55
17	STANDARD BLAST TUBE - COMPLETE	309.00.39	309.00.39	309.00.39	309.00.39	309.10.60	309.10.60	309.10.60	309.10.E9	309.10.E9
17	LONG BLAST TUBE - COMPLETE	309.10.F1	309.10.F1	309.10.F1	309.10.F1	309.10.61	309.10.61	309.10.61	309.10.E0	309.10.E0
18	COMBUSTION HEAD	306.00.C1	306.00.C1	306.00.C1	306.00.C1	306.00.78	306.00.78	306.00.78	306.00.C2	306.00.C2
19	IGNITION ELECTRODE	208.02.02	208.02.02	208.02.02	208.02.02	208.02.02	208.02.02	208.02.02	208.02.02	208.02.02
20	IGNITION CABLE	605.01.08	605.01.08	605.01.08	605.01.08	605.01.08	605.01.08	605.01.08	605.01.08	605.01.08
21	GASKET	211.00.13	211.00.13	211.00.13	211.00.13	211.00.13	211.00.13	211.00.13	211.00.33	211.00.33
22	RING "OR" FOR THROTTLE VALVE	225.00.03	225.00.03	225.00.03	225.00.03	225.00.03	225.00.03	225.00.03	225.00.03	225.00.03
23	THROTTLE VALVE	246.02.22	246.02.22	246.02.22	246.02.22	246.02.32	246.02.32	246.02.33	246.02.22	246.02.24
24	GAS PRESSURE SWITCH	216.00.10	216.00.10	216.00.10	216.00.10	218.02.55.01	218.02.55.01	218.02.55.01	218.02.03.01	218.02.03.01
26	INTERNAL AIR DAMPER	214.00.07	214.00.07	214.00.07	214.00.07	214.00.07	214.00.07	214.00.07	214.00.22	214.00.22
27	ESTERNAL AIR DAMPER	---	---	---	---	---	---	---	214.00.23	214.00.23
28	SERVOCONTROL SUPPORT BRACKET	---	---	305.00.09	305.00.09	---	---	---	305.00.10	305.00.10
29	SERVOCONTROL	---	---	248.00.42	248.00.42	---	---	---	248.00.42	248.00.42
30	LEAKAGE CONTROL	219.16.04	219.16.04	219.16.04	219.16.04	219.16.04	219.16.04	219.16.04	219.16.04	219.16.04
31	AIR INLET	204.00.17	204.00.17	204.00.17	204.00.17	204.00.17	204.00.17	204.00.17	204.00.11	204.00.11
32	FAN	215.00.21	215.00.21	215.00.21	215.00.21	215.00.21	215.00.21	215.00.21	215.00.18	215.00.18
33	AIR PRESSURE SWITCH	216.00.65	216.00.65	216.00.65	216.00.65	216.00.65	216.00.65	216.00.65	216.00.65	216.00.65
35	HEAD ADJUSTING KNOB	232.05.02	232.05.02	232.05.02	232.05.02	232.05.02	232.05.02	232.05.02	232.05.03	232.05.03
36	ELECTRIC MOTOR	218.00.91	218.00.91	218.00.91	218.00.91	218.02.55	218.02.55	218.02.55	218.02.03	218.02.03
37	GAS SOLENOID VALVE EV2	---	---	---	---	---	---	219.01.51	---	219.01.51
38	GAS SOLENOID VALVE EV1	---	---	---	---	---	---	219.03.21	---	219.03.21
39	GAS FILTER	---	---	---	---	---	---	209.01.17	---	209.01.17
40	COIL FOR EV1	---	---	---	---	---	---	258.00.05	---	258.00.05
41	PRINTED CIRCUIT FOR EV1	---	---	---	---	---	---	253.01.05	---	253.01.05
42	ACTUATOR WITH STABILIZER	---	---	---	---	---	---	219.01.20	---	219.01.20
43	MULTIBLOC VALVES GROUP	219.03.E9	219.03.E0	219.03.E9	219.03.E0	219.03.E9	219.03.E0	---	219.03.E0	---
	PRINTED CIRCUIT FOR ELECTRIC BOARD	610.05.35	610.05.35	610.05.35	610.05.35	610.05.35	610.05.35	610.05.35	610.05.35	610.05.35

SPARE PARTS - Burners P20 - P30 M-.MD...

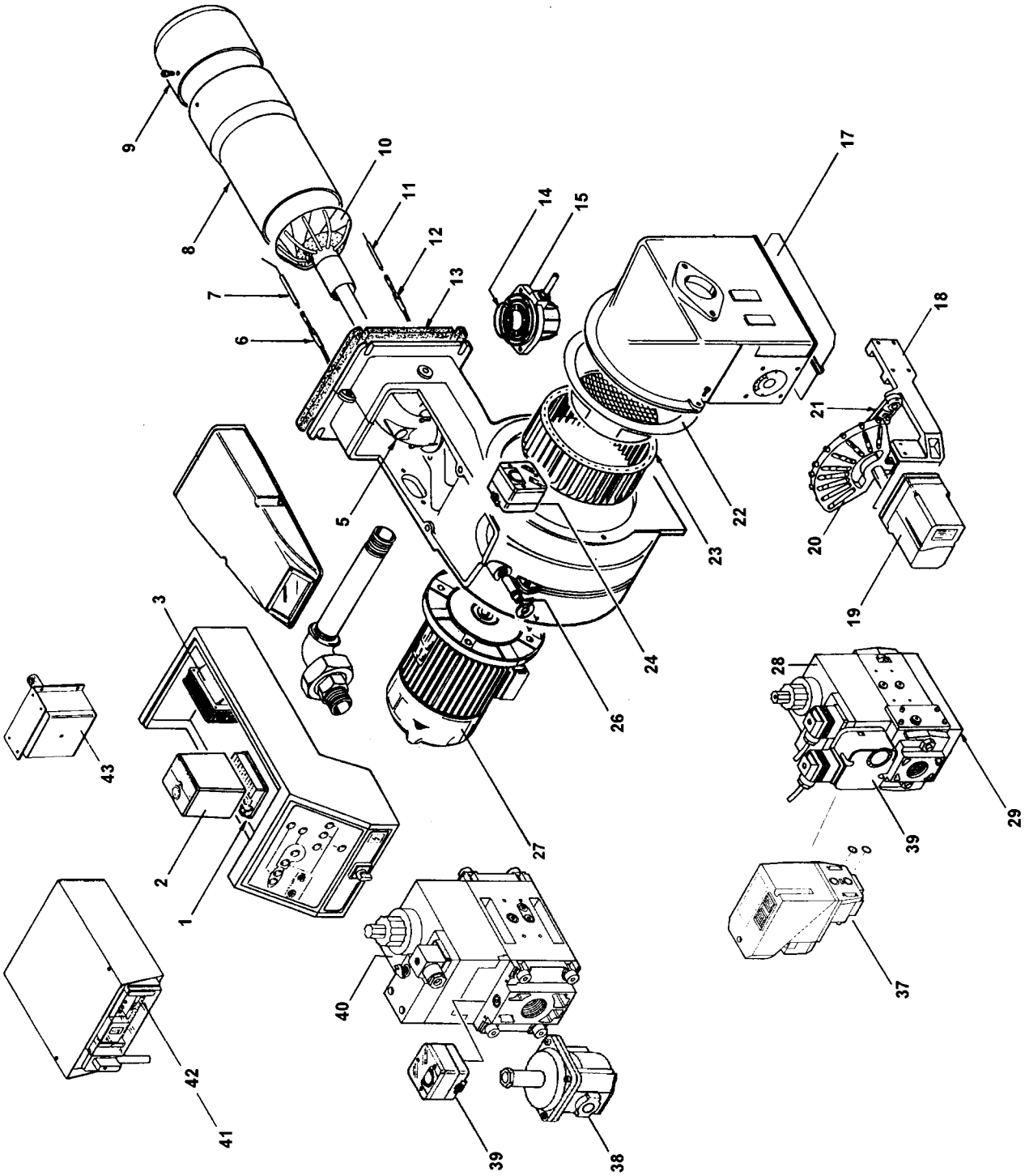

POS.	DESCRIPTION	P20 M-.MD.S.*.A.0.25	P20 M-.MD.L.*.A.0.25	P20 M-.MD.S.*.A.0.40	P20 M-.MD.L.*.A.0.40	P30 M-.MD.S.*.A.0.40	P30 M-.MD.L.*.A.0.40
1	SOCKET FOR FLAME CONTROL DEVICE	203.04.15	203.04.15	203.04.15	203.04.15	203.04.15	203.04.15
2	FLAME CONTROL DEVICE LANDIS LGB22	202.04.30	202.04.30	202.04.30	202.04.30	202.04.30	202.04.30
2	FLAME CONTROL DEVICE LANDIS LMG22	202.04.50	202.04.50	202.04.50	202.04.50	202.04.50	202.04.50
3	TRANSFORMER	217.01.02	217.01.02	217.01.02	217.01.02	217.01.02	217.01.02
5	MANIFOLD	274.00.02	274.00.02	274.00.02	274.00.02	274.00.02	274.00.02
6	DETECTION CABLE	605.02.05	605.02.05	605.02.05	605.02.05	605.02.05	605.02.05
7	DETECTION ELECTRODE	208.01.06	208.01.06	208.01.06	208.01.06	208.01.02	208.01.02
8	COMPLETE BLAST TUBE	309.00.96	309.00.86	309.00.96	309.00.86	309.00.19	309.10.05
9	BLAST TUBE EXTENSION	---	---	---	---	---	220.00.46
10	COMBUSTION HEAD	306.00.73	306.00.72	306.00.73	306.00.72	306.00.05	306.00.05
11	IGNITION ELECTRODE	208.02.09	208.02.09	208.02.09	208.02.09	208.02.02	208.02.02
12	IGNITION CABLE	60.01.08	605.01.08	605.01.08	605.01.08	605.01.08	605.01.08
13	GASKET	211.00.04	211.00.04	211.00.04	211.00.04	211.00.04	211.00.04
14	"O" RING	225.00.01	225.00.01	225.00.01	225.00.01	225.00.01	225.00.01
15	THROTTLE VALVE	246.02.21	246.02.21	246.02.21	246.02.21	246.02.21	246.02.21
17	AIR DAMPER	214.00.05	214.00.05	214.00.05	214.00.05	214.00.05	214.00.05
18	SERVOCONTROL SUPPORT BRACKET	305.00.11	305.00.11	305.00.11	305.00.11	305.00.11	305.00.11
19	SERVOCONTROL (BERGER)	248.00.53	248.00.53	248.00.53	248.00.53	248.00.53	248.00.53
20	ADJUSTABLE CAM	244.00.29	244.00.29	244.00.29	244.00.29	244.00.29	244.00.29
21	LEVER	244.00.15	244.00.15	244.00.15	244.00.15	244.00.15	244.00.15
22	INLET CONE	204.00.16	204.00.16	204.00.16	204.00.16	204.00.16	204.00.16
23	FAN	215.00.06	215.00.06	215.00.06	215.00.06	215.00.06	215.00.06
24	AIR PRESSURE SWITCH	216.00.65	216.00.65	216.00.65	216.00.65	216.00.65	216.00.65
26	HEAD ADJUSTING SCREW	232.05.01	232.05.01	232.05.01	232.05.01	232.05.01	232.05.01
27	MOTOR	218.07.04	218.07.04	218.07.04	218.07.04	218.07.04	218.07.04
28	MULTIBLOC COIL	258.00.17	258.00.17	258.00.17	258.00.17	258.00.17	258.00.17
29	MULTIBLOC VALVES GROUP	219.03.41	219.03.41	219.03.42	219.03.42	219.03.42	219.03.42
37	LEAKAGE CONTROL VPS504 (OPTIONAL)	219.16.04	219.16.04	219.16.04	219.16.04	219.16.04	219.16.04
39	MINIMUM GAS PRESSURE SWITCH	216.00.52	216.00.52	216.00.52	216.00.52	216.00.52	216.00.52
41	MODULATOR	257.00.34	257.00.34	257.00.34	257.00.34	257.00.34	257.00.34
42	FIELD ADAPTER	256.01..	256.01..	256.01..	256.01..	256.01..	256.01..
43	MODULATION PROBE	256.01..	256.01..	256.01..	256.01..	256.01..	256.01..

SPARE PARTS - Burners P45 - P65 M-.MD

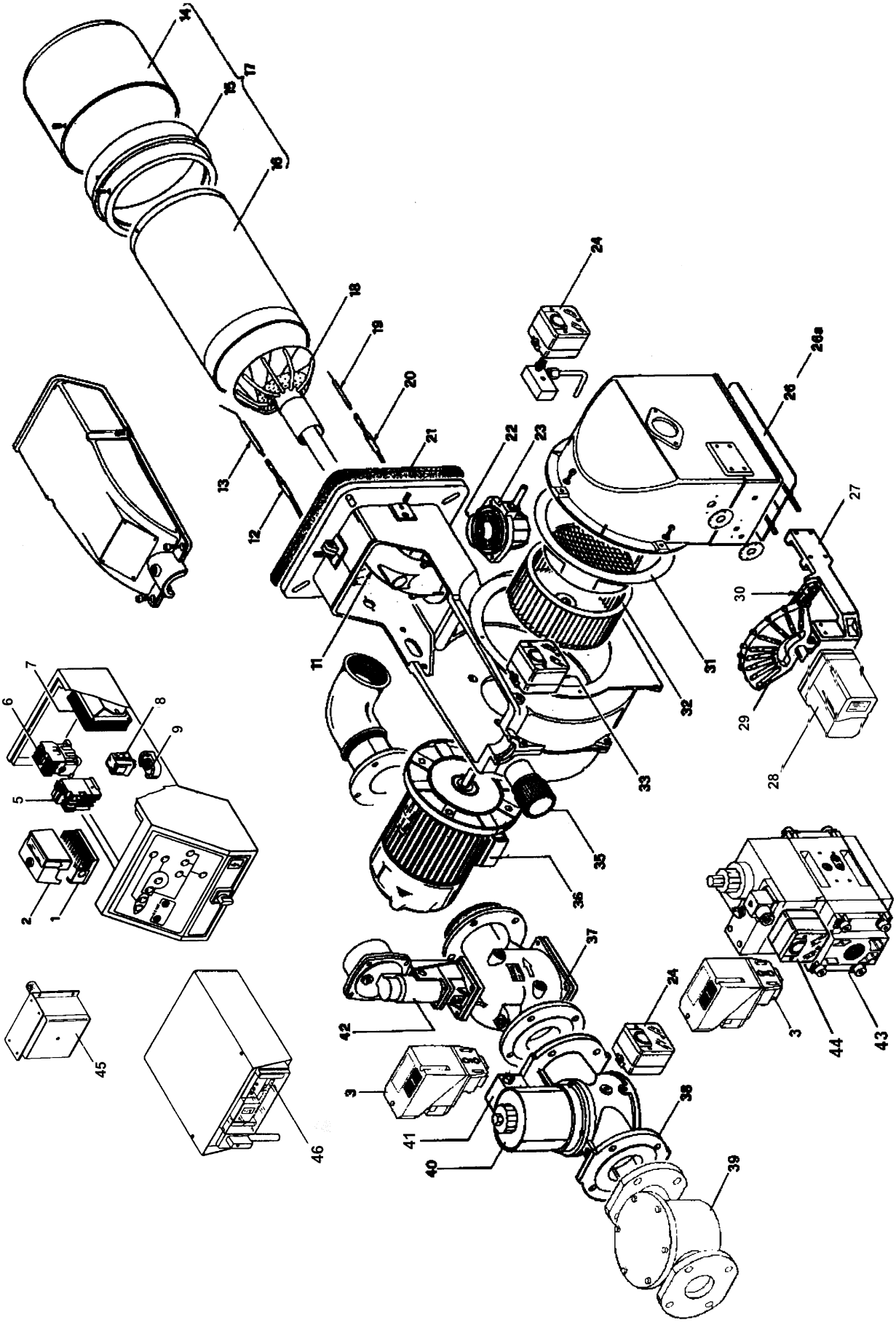

POS.	DESCRIPTION	P45 M-.MD..S...40 M-.MD..L...40	P45 M-.MD..S...50 M-.MD..L...50	P65 M-.MD..S...50 M-.MD..L...50	P65 M-.MD..S...65 M-.MD..L...65
1	FLAME CONTROL DEVICE SOCKET	203.04.15	203.04.15	203.04.15	203.04.15
2	FLAME CONTROL DEVICE LANDIS LGB22	202.04.30	202.04.30	202.04.30	202.04.30
2	FLAME CONTROL DEVICE LANDIS LMG22	202.04.50	202.04.50	202.04.50	202.04.50
3	LEAKAGE CONTROL	219.16.04	219.16.04	219.16.04	219.16.04
5	OVERLOAD RELAY	---	---	614.00.32	614.00.32
6	CONTACTOR	---	---	613.00.16	613.00.16
7	IGNITION TRANSFORMER	217.01.02	217.01.02	217.01.02	217.01.02
8	RELAY	---	---	---	---
9	RELAY SOCKET	---	---	---	---
11	MANIFOLD	274.00.02	274.00.02	274.00.03	274.00.03
12	DETECTION CABLE	605.02.05	605.02.05	605.02.05	605.02.05
13	DETECTION ELECTRODE	208.01.02	208.01.02	208.01.02	208.01.02
14	STANDARD BLAST TUBE EXTENSION	---	---	220.00.55	220.00.55
14	LONG BLAST TUBE EXTENSION	220.00.46	220.00.46	220.00.56	220.00.56
15	BLAST TUBE RING	---	---	247.00.37	247.00.37
16	BLAST TUBE BODY	---	---	230.00.55	230.00.55
17	COMPLETE BLAST TUBE - STANDARD	309.00.39	309.00.39	309.10.E9	309.10.E9
17	COMPLETE BLAST TUBE - LONG	309.10.F1	309.10.F1	309.10.E0	309.10.E0
18	COMBUSTION HEAD	306.00.C1	306.00.C1	306.00.C2	306.00.C2
19	IGNITION ELECTRODE	208.02.02	208.02.02	208.02.02	208.02.02
20	IGNITION CABLE	605.01.08	605.01.08	605.01.08	605.01.08
21	GASKET	211.00.13	211.00.13	211.00.33	211.00.33
22	OR RING FOR THROTTLE VALVE	225.00.03	225.00.03	225.00.03	225.00.03
23	THROTTLE VALVE	246.02.22	246.02.22	246.02.22	246.02.24
24	GAS PRESSURE SWITCH	216.00.10	216.00.10	216.00.10	216.00.10
26	INTERNAL AIR DAMPER	214.00.07	214.00.07	214.00.22	214.00.22
26A	EXTERNAL AIR DAMPER	---	---	214.00.23	214.00.23
27	SERVOCONTROL SUPPORT BRACKET	305.00.11	305.00.11	305.00.12	305.00.12
28	SERVOCONTROL	248.00.53	248.00.53	248.00.53	248.00.53
29	ADJUSTABLE CAM	244.00.29	244.00.29	244.00.29	244.00.29
30	COMPLETE LEVER	244.00.15	244.00.15	244.00.15	244.00.15
31	INLET CONE	204.00.17	204.00.17	204.00.11	204.00.11
32	FAN	215.00.21	215.00.21	215.00.18	215.00.18
33	AIR PRESSURE SWITCH	216.00.65	216.00.65	216.00.65	216.00.65
35	HEAD ADJUSTING KNOB	232.05.02	232.05.02	232.05.03	232.05.03
36	ELECTRIC MOTOR	218.02.03.01	218.02.03.01	218.02.03.01	218.02.03.01
37	GAS SOLENOID VALVE EV2	---	---	---	219.01.51
38	GAS SOLENOID VALVE EV1	---	---	---	219.03.21
39	GAS FILTER	---	---	---	209.01.17
40	COIL FOR EV1	---	---	---	258.00.05
41	PRINTED CIRCUIT FOR EV1	---	---	---	253.01.05
42	ACTIVATOR WITH STABILIZER	---	---	---	219.01.20
43	MULTIBLOC VALVES GROUP	219.03.E9	219.03.E0	219.03.E0	---
44	GAS PRESSURE SWITCH	216.00.76	216.00.76	216.00.76	---
45	MODULATOR PROBE	256.01..	256.01..	256.01..	256.01..
46	MODULATOR RWF40	257.00.34	257.00.34	257.00.34	257.00.34
46	FIELD ADAPTER	257.01.12	257.01.12	257.01.12	257.01.12
46A	FLAME CONTROL DEVICE SOCKET	256.01..	256.01..	256.01..	256.01..

APPENDIX

SIEMENS LME11/21/22 CONTROL BOX

The series of equipment LME.. is used for the starup and supervisione of 1- or 2- stage gas burners. The series LME.. is interchangeable with the series LGB.. and LMG.., all diagrams and accessories are interchangeable.

Comparative table

LGB Series	LMG Series	LME Series
---	LMG 25.33	LME 11.33
LGB 21.33	LMG 21.33	LME 21.33
LGB 22.33	LMG 22.33	LME 22.33

Preconditions for burner startup

- Burner control must be reset
- All contacts in the line are closed, request for heat
- No undervoltage
- Air pressure switch LP must be in its “no-load” position
- Fan motor or AGK25 is closed
- Flame detector is darkened and there is no extraneous light

Undervoltage

Safety shutdown from the operating position takes place should mains voltage drop below about AC 175 V (at UN = AC 230 V)

Restart is initiated when mains voltage exceeds about AC 185 V (at UN = AC 230 V).

Controlled intermittent operation

After no more than 24 hours of continuous operation, the burner control will initiate automatic controlled shutdown followed by a restart.

Reversed polarity protection with ionization

If the connections of live conductor (terminal 12) and neutral conductor (terminal 2) aremixed up, the burner control will initiate lockout at the end of the safety time “TSA”.

Control sequence in the event of fault

If lockout occurs, the outputs for the fuel valves, the burner motor and the ignition equipment will immediately be deactivated (< 1 second).

Operational status indication

In normal operation, the different operating states are showed by means of the multicolor LED, inside the lockout reset button:

red LED **yellow LED** **green LED** LED	..... Steady on ❍... Off

During startup, status indication takes place according to the table:

Status	Color code	Color
Waiting time tw, other waiting states	❍.....	Off
Ignition phase, ignition controlled	● ❍ ● ❍ ● ❍ ● ❍ ● ❍ ●	Flashing yellow
Operation, flame ok	□.....	Green
Operation, flame not ok	□ ❍ □ ❍ □ ❍ □ ❍ □ ❍	Flashing green
Extraneous light on burner startup	□ ▲ □ ▲ □ ▲ □ ▲ □ ▲	Green - red
Undervoltage	● ▲ ● ▲ ● ▲ ● ▲ ● ▲	Yellow - red
Fault, alarm	▲.....	Red
Error code output (refer to “Error code table”)	▲❍ ▲❍ ▲❍ ▲❍	Flashing red

START-UP PROGRAM

As far as the startup program, see its time diagram:

A Start command (switching on)

This command is triggered by control thermostat / pressure controller «R». Terminal 12 receives voltage and the programming mechanism starts running. On completion of waiting time «tw» with the LME21..., or after air damper «SA» has reached the nominal load position (on completion of «t11») with the LME22..., fan motor «M» will be started.

tw Waiting time

During the waiting time, air pressure monitor «LP» and flame relay «FR» are tested for correct contact positions.

t11 Programmed opening time for actuator «SA»

(Only with LME22...) The air damper opens until the nominal load position is reached. Only then will fan motor «M» be switched on.

t10 Specified time for air pressure signal

On completion of this period of time, the set air pressure must have built up, or else lockout will occur.

t1 Prepurge time

Purging the combustion chamber and the secondary heating surfaces: required with low-fire air volumes when using the LME21... and with nominal load air volumes when using the LME22.... The diagrams show the so-called prepurge time «t1» during which air pressure monitor «LP» must indicate that the required air pressure is available. The effective prepurge time «t1» comprises interval end «tw» through «t3».

t12 Programmed closing time for actuator «SA»

(Only with LME22...)During «t12», the air damper travels to the low-fire position.

t3 Preignition time

During «t3» and up to the end of «TSA», flame relay «FR» is forced to close. On completion of «t3», the release of fuel is triggered at terminal 4.

TSA Ignition safety time

On completion of «TSA», a flame signal must be present at terminal 1. That flame signal must be continuously available until shutdown occurs, or else flame relay «FR» will be deenergized, resulting in lockout.

t4 Interval BV1 and BV2-LR

Time between the end of TSA and the signal to the second fuel valve BV2 or to the load controller LR

B - B' Interval for flame establishment

C Burner operation position

C - D Burner operation (heat production)

D Controlled by "R" shutdown

The burner stops and the control device is ready for a new startup.

LME11 control sequence

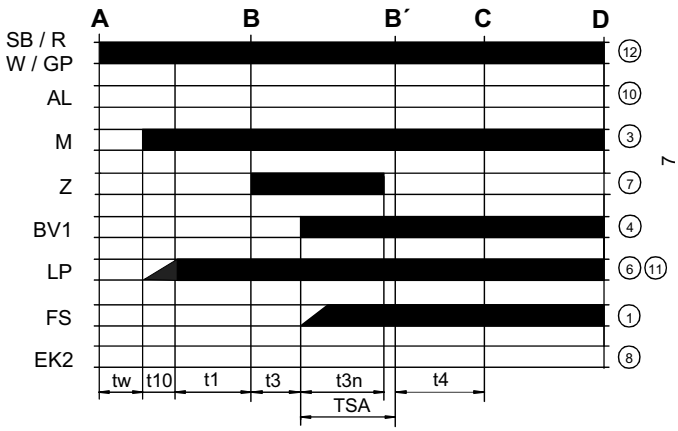

LME21 control sequence

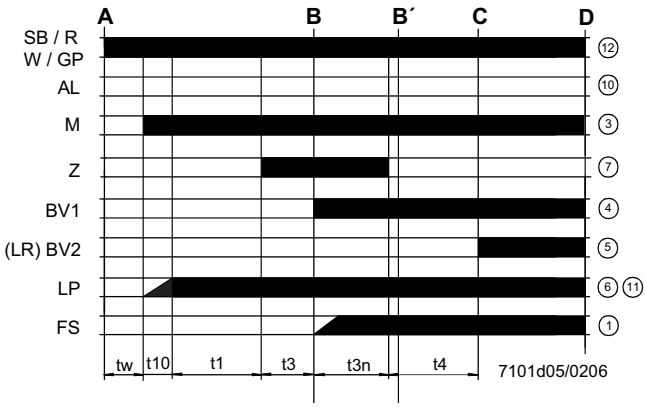

LME22 control sequence

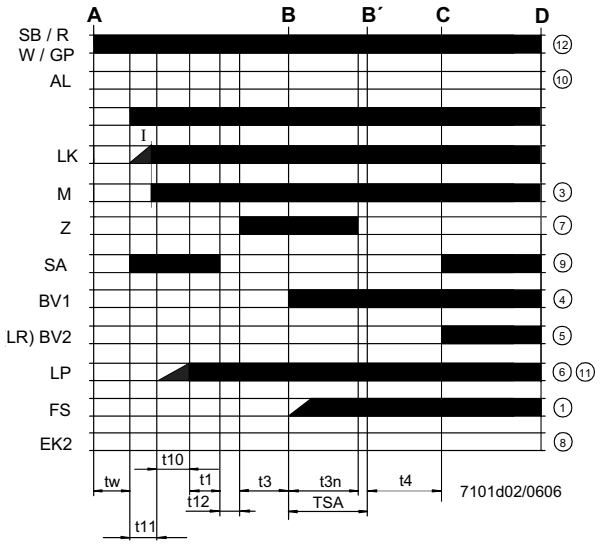

Control sequence

tw	Waiting time
t1	Purge time
TSA	Ignition safety time
t3	Preignition time
t3n	Postignition time
t4	Interval between BV1 and BV2/LR
t10	Specified time for air pressure signal
t11	Programmed opening time for actuator SA
t12	Programmed closing time for actuator SA

LME11 connection diagram

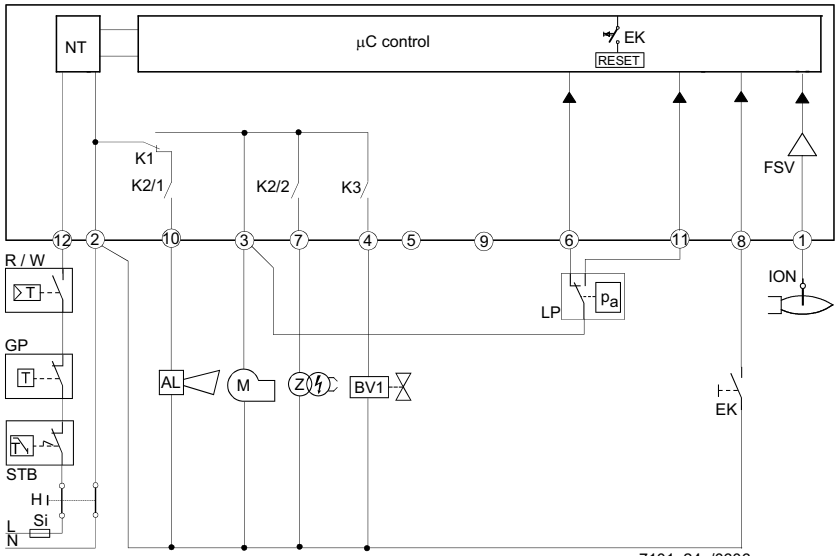

LME21 connection diagram

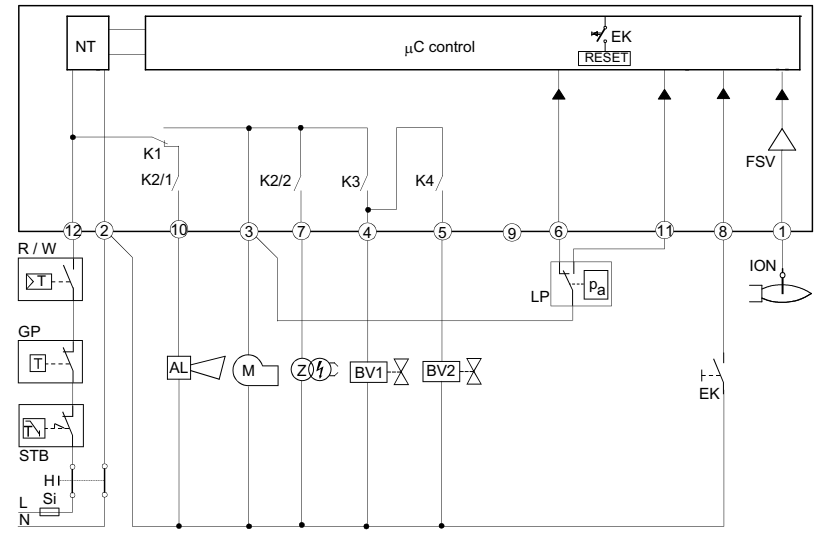

LME22 connection diagram

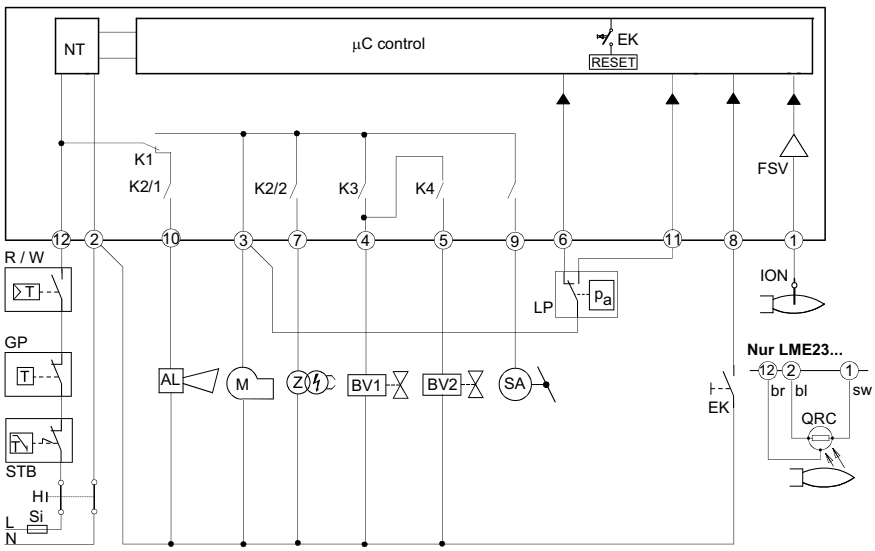

Connection diagram

AL	Error message (alarm)
BV	Fuel valve
EK2	Remote lockout reset button
FS	Flame signal
GP	Gas pressure switch
LP	Air pressure switch
LR	Load controller
M	Fan motor
R	Control thermostat/pressurestat
SB	Safety limit thermostat
W	Limit thermostat /pressure switch
Z	Ignition transformer

CONTROL PROGRAM IN THE EVENT OF FAULT

- If a fault occurs, all outputs will immediately be deactivated (in less than 1s).
- After an interruption of power, a restart will be made with the full program sequence.
- If the operating voltage drops below the undervoltage thresold, a safety shutdown is performed.
- If the operating voltage exceeds the undervoltage thresold, a restart will be performed.
- In case of extraneous light during “t1”, a lockout occurs.
- In case of extraneous light during “tw”, there is a prevention of startup and a lockout after 30 seconds.
- In case of no flame at the end of TSA, there will be max. 3 repetitions of the startup cycle, followed by a lockout at the end of TSA, for mod. LME11..; directly a lockout at the end of TSA for LME21-22 models.
- For LME11 model: if a loss of flame occurs during operation, in case of an establishment of flame at the end of TSA, there will be max. 3 repetitions, otherwise a lockout will occur.
- For LME21-22 models: if a loss of flame occurs during operation, there will be a lockout.
- If the contact of air pressure monitor LP is in working position, a prevention of startup and lockout after 65 seconds will occur.
- IIf the contact of air pressure monitor LP is in normal position, a lockout occurs at the end of t10.
- If no air pressure signal is present after completion of t1, a lockout will occur.

CONTROL BOX LOCKED

In the event of lockout, the LME.. remains locked and the red signal lamp (LED) will light up.The burner control can immediately be reset. This state is also mantained in the case fo mains failure.

DIAGNOSITICS OF THE CASUE OF FAULT

- Press the lockout reset button for more than 3 seconds to activate the visual diagnostics.
- Count the number of blinks of the red signsl lamp and check the fault condition on the “Error code table” (the device repeats the blinks for regular intervals).

During diagnostics, the control outputs are deactivated:

- the burner remains shut down;
- external fault indication is deactivated;
- fault status is showed by the red LED, inside the LME’s lockout reset buttonaccording to the “Error code table”:

ERROR CODE TABLE	
2 blinks **	**No establishment of flame at the end of TSA** - Faulty or soiled fuel valves - Faulty or soiled flame detector - Inadequate adjustement of burner, no fuel - Faulty ignition equipment
3 blinks ***	**The air pressure switch does not switch or remains in idle position:** - LP is faulty - Loss of air pressure signal after t10 - LPis welded in normal position.
4 blinks ****	- Extraneous light when burner starts up.
5 blinks *****	- LP is working position.
6 blinks *****	Free.
7 blinks *******	**Loss of flame during operation** - Faulty or soiled fuel valves - Faulty or soiled flame detector - Inadequate adjustement of burner
8 ÷ 9 blinks	Free
10 blinks **********	**Faulty output contacts** ***Attention: “lockout” remote signal (terminal no. 10) not enabled*** - Wiring error - Anomalous voltage on ouput terminals - Other faults
14 blinks ************ (only for LME4x)**	- CPI contact (gas valve microswitch) not closed.

RESETTING THE BURNER CONTROL

When lockout occurs, the burner control can immediately be reset, by pressing the lockout reset button for about 1..3 seconds. The LME.. can only be reset when all contacts in the line are closed and when there is no undervoltage.

LIMITATION OF REPETITIONS (only for LME11.. model)

If no flame is established at the end of TSA, or if the flame is lost during operation, a maximum of 3 repetitions per controller startup can be performed via “R”, otherwise lockout will be initiated. Counting of repetitions is restarted each time a controlled startup via “R” takes place.

⚠ **Condensation, formation of ice and ingress of water are not permitted!**

TECHNICAL CHARACTERISTICS

Mains voltage	120V AC +10% / -15% 230V AC +10% / -15%
Frequency	50 ... 60 Hz +/- 6%
Power consumption	12VA
External primary fuse	max. 10 A (slow)
input current at terminal 12	max. 5 A
Detection cable length	max. 3m (for electrode)
Detection cable length	max. 20 m (laid separately, for QRA probe)
Reset cable length	max. 20 m (posato separatamente)
Term. 8 & 10 cable length	max. 20 m
Thermostat cable length and other terminals	max. 3 m
Safety class	I
Index of protection	IP40 (to be ensured during mounting)
Operating conditions	-20... +60 °C, < 95% UR
Storage conditions	-20... +60 °C, < 95% UR
Weight	approx. 160 g

C.I.B. UNIGAS S.p.A.
Via L.Galvani, 9 - 35011 Campodarsego (PD) - ITALY
Tel. +39 049 9200944 - Fax +39 049 9200945/9201269
web site: www.cibunigas.it - e-mail: cibunigas@cibunigas.it

Note: specifications and data subject to change. Errors and omissions excepted.

CIB UNIGAS 600V

CONTROLLER

CE

USER'S MANUAL

COD. M12925CA Rel 1.2 08/2014

SOFTWARE VERSION **1.0x T73**
code **80379** / Edition **01** - **06/2012**

1 • INSTALLATION

• Dimensions and cut-out; panel mounting

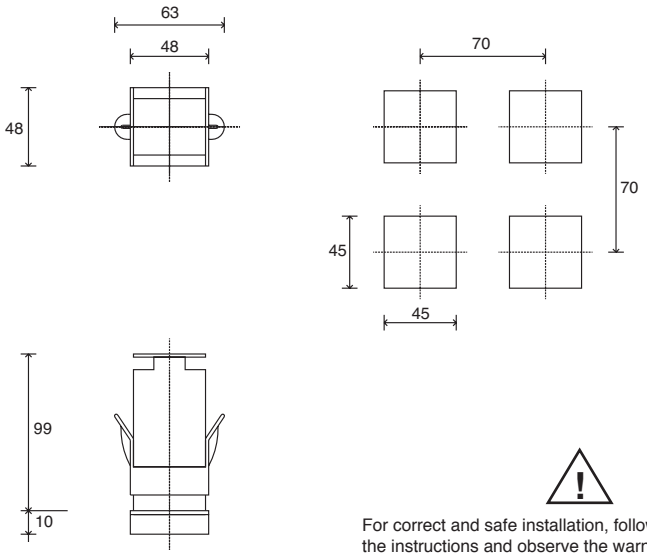

For correct and safe installation, follow the instructions and observe the warnings contained in this manual.

Panel mounting:

To fix the unit, insert the brackets provided into the seats on either side of the case.
To mount two or more units side by side, respect the cut-out dimensions shown in the drawing.

CE MARKING: The instrument conforms to the European Directives 2004/108/CE and 2006/95/CE with reference to the generic standards: **EN 61000-6-2** (immunity in industrial environment) **EN 61000-6-3** (emission in residential environment) **EN 61010-1** (safety).

MAINTENANCE: Repairs must be done only by trained and specialized personnel.
Cut power to the device before accessing internal parts.
Do not clean the case with hydrocarbon-based solvents (Petrol, Trichlorethylene, etc.). Use of these solvents can reduce the mechanical reliability of the device. Use a cloth dampened in ethyl alcohol or water to clean the external plastic case.

SERVICE: GEFRAN has a service department. The warranty excludes defects caused by any use not conforming to these instructions.

EMC conformity has been tested with the following connections

FUNCTION	CABLE TYPE	LENGTH
Power supply cable	1 mm²	1 m
Relay output cable	1 mm²	3,5 m
TC input	0,8 mm² compensated	5 m
Pt100 input	1 mm²	3 m

2 • TECHNICAL SPECIFICATIONS

Display	2x4 digit green, high display 10 and 7mm
Keys	4 of mechanical type (Man/Aut, INC, DEC, F)
Accuracy	0.2% f.s. ±1 digit ambient temperature 25°C
Main input (settable digital filter)	TC, RTD, PTC, NTC 60mV,1V Ri≥1MΩ; 5V,10V Ri≥10KΩ; 20mA Ri=50Ω Tempo di campionamento 120 msec.
Type TC Thermocouples (ITS90)	Type TC Thermocouples : J,K,R,S,T (IEC 584-1, CEI EN 60584-1, 60584-2) ; custom linearization is available / types B,E,N,L GOST,U,G,D,C are available by using the custom linearization.
Cold junction error	0,1° / °C
RTD type (scale configurable within indicated range, with or without decimal point) (ITS90) *Max line resistance for RTD*	DIN 43760 (Pt100), JPT100 20Ω
PTC type / NTC Type	990Ω, 25°C / 1KΩ, 25°C
Safety	detection of short-circuit or opening of probes, LBA alarm
°C / °F selection	configurable from faceplate
Linear scale ranges	-1999 to 9999 with configurable decimal point position
Controls	PID, Self-tuning, on-off
pb - dt - it	0,0...999,9 % - 0,00...99,99 min - 0,00...99,99 min
Action	Heat / Cool
Control outputs	on / off
Maximum power limit heat / cool	0,0...100,0 %
Cycle time	0...200 sec
Main output type	relay, logic, continuous (0...10V Rload ≥ 250KΩ, 0/4...20mA Rload ≤ 500Ω)
Softstart	0,0...500,0 min
Fault power setting	-100,0...100,0 %
Automatic blanking	Displays PV value, optional exclusion
Configurable alarms	Up to 3 alarm functions assignable to an output, configurable as: maximum, minimum, symmetrical, absolute/deviation, LBA
Alarm masking	- exclusion during warm up - latching reset from faceplate or external contact
Type of relay contact	NO (NC), 5A, 250V/30Vdc cosφ=1
Logic output for static relays	24V ±10% (10V min at 20mA)
Transmitter power supply	15/24Vdc, max 30mA short-circuit protection
Power supply (switching type)	(std) 100 ... 240Vac ±10% (opt.) 11...27Vac/dc ±10%; 50/60Hz, 8VA max
Faceplate protection	IP65
Working / Storage temperature range	0...50°C / -20...70°C
Relative humidity	20 ... 85% non-condensing
Environmental conditions of use	for internal use only, altitude up to 2000m
Installation	Panel, plug-in from front
Weight	160g for the complete version

3 • DESCRIPTION OF FACEPLATE

Function indicators
Indicates modes of operation

L1 MAN/AUTO = OFF (automatic control)
ON (manual control)

L2 PRE-HEATING = ON (running)

L3 SELFTUNING = ON (enabled Self)
OFF (disabled Self)

Automatic/Manual adjustment selection
Active only when PV display visualises the process variable (button pressed for at least 5 sec.)

Indication of output states
OUT 1 (AL1); OUT 2 (OPEN); OUT 3 (CLOSED)

PV Display: Indication of process variable
Error Indication: LO, HI, Sbr, Err
LO= the value of process variable is < di LO_S
HI= the value of process variable is > di HI_S
Sbr= faulty sensor or input values higher than max. limits
Err= PT100 third wire opened for PT100, PTC or input values lower than min. limits (i.e.: TC wrong connection)

SV display: Indication of setpoint

Function key
Gives access to the various configuration phases •• Confirms change of set parameters and browses next or previous parameter (if Auto/Man key is pressed)

"Inc" and "Dec" key
Press to increment (decrement) any numerical parameter •• Increment (decrement) speed is proportional to time key stays pressed •• The operation is not cyclic: once the maximum (minimum) value of a field is reached, the value will not change even if the key remains pressed.

4 • CONNECTIONS

• Outputs

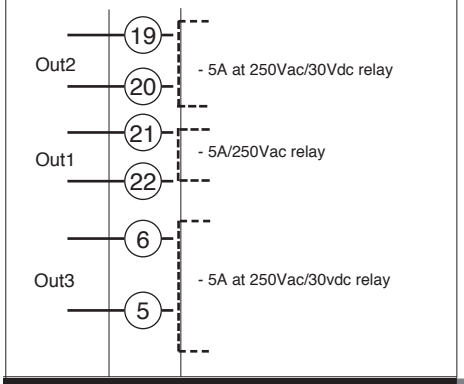

TOP

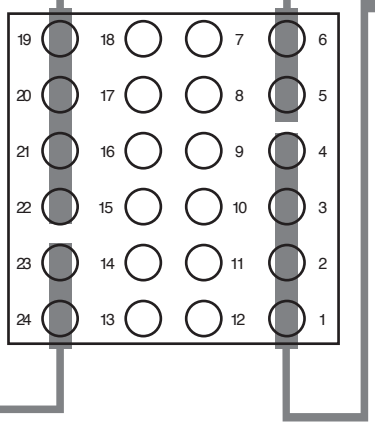

• Power Supply

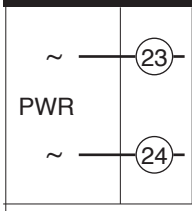

Standard:
100...240Vac ± 10%

Optional:
11...27Vac/Vdc ± 10%

Max. power 8VA; 50/60 Hz

• Inputs

• TC Input

Available thermocouples:
J, K, R, S, T
(B, E, N, L, U, G, D, C custom linearization is available)
- Observe polarities
- For extensions, use the correct compensating cable for the type of TC used

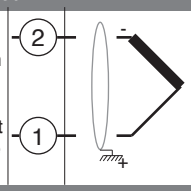

• Linear input with 3-wire transmitter

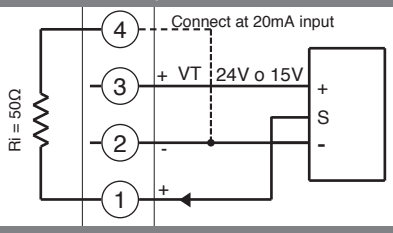

• Linear input (I)

Linear input in dc current

20mA, Ri = 50Ω

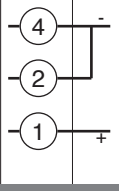

• Input 1 linear with transmitter 2 wires

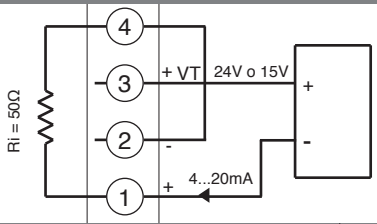

• Linear input (V)

Linear input in dc voltage
60mV, 1V
Ri > 1MΩ
5V, 10V
Ri > 10KΩ

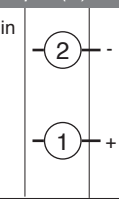

• Pt100 / PTC / NTC

Use wires of adequate diameter (min. 1mm²)
PT100, JPT100, PTC, NTC

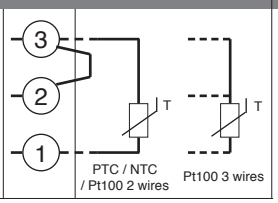

• Identification of boards

Power board - Solder side

Select transmitter voltage

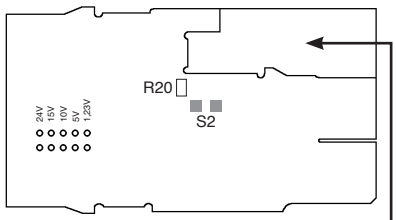

N.B. : you can keep the **OUT1** relay energized at power-up by inserting jumper **S2** and removing resistance **R20**.

CPU board - Component side

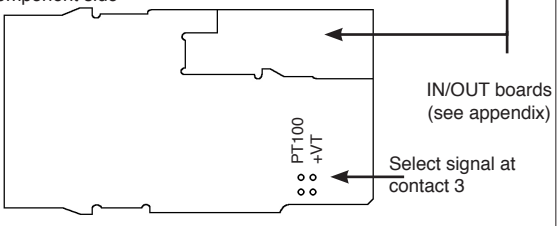

IN/OUT boards (see appendix)

Select signal at contact 3

• Device structure

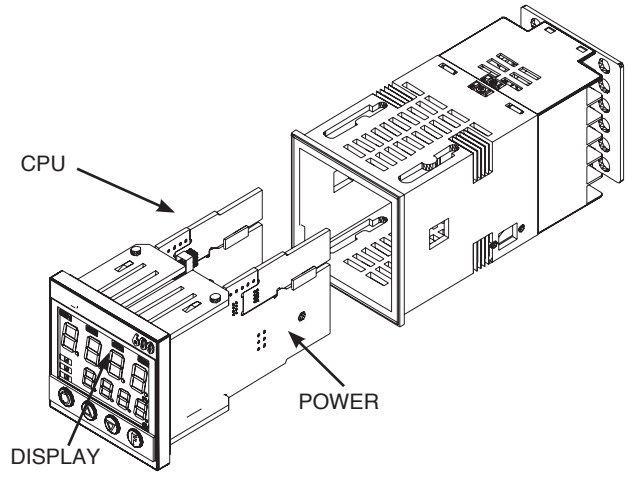

5 • "EASY" PROGRAMMING and CONFIGURATION

THE EASY CONFIGURATION (Pro=0...12) IS SUITABLE FOR VERSIONS WITH AL1/OPEN/CLOSED

S4 Jumper (CPU) ON

LEVEL 1 MENU

P.V. / S.V.	P.V. / S.V. Process variable (PV display) Work Setpoint (SV display) or control output value with controller in manual
_SP	Local Setpoint (scale points Lo.L...Hi.L)
HY.P	Positive hysteresis alarm 1 (0 ... +999 scale points)
HY.n	Negative hysteresis alarm 1 (0 ... -999 scale points)

PAS — Password

PAS = 99

Pro — Protection code

• Prot

12 — *Pro* — Protection code

Prot	Display	Modification
0	SP, Hy.P, Hy.n	SP, Hy.P , Hy.n
1	SP, Hy.P, Hy.n	SP
2	SP	

+ 4 to disable InP, Out
+ 8 to disable CFG

6 • PROGRAMMING and CONFIGURATION

LEVEL 1 MENU

	P.V. / S.V.	P.V. / S.V. Process variable (PV display) Work Setpoint (SV display) or control output value with controller in manual
80.0	_SP	Local Setpoint (Lo.L ... Hi.L)
+5.0	HY.P	Positive hysteresis alarm 1 (0 ... +999 scale points)
-5.0	HY.n	Negative hysteresis alarm 1 (0 ... +999 scale points)
	P.oS	Valve position indication (0.0 ... 100.0 %) (*)
	Ou.P	Control output value (*)

(*) The automatic return *PV/SV* display is disabled for these displays

If Inc, Dec, F keys are not pressed within 15 sec, display returns automatically to P.V. value.

INF — Information display

NO — S4 Jumper (CPU) = ON

CFG — Custom menu

InP — Input settings

Out — Output settings

PAS — Password

NO — PAS = 99

Pro — Protection code

Hrd — Hardware configuration

Lin — Input linearization

U.CA — User calibration

Keep the F key pressed to scroll the menus

Release the F key to select the displayed menu

Press the F key to access the parameters

Keep the F key pressed to exit any menu

Keep F + Auto/Man keys pressed for 2 sec. on any menu to go immediately to level 1 display

Pressing the Auto/Man + F keys on any menu immediately returns you to the previous parameter.

N.B.: Once a particular configuration is entered, all unnecessary parameters are no longer displayed

• InFo Display

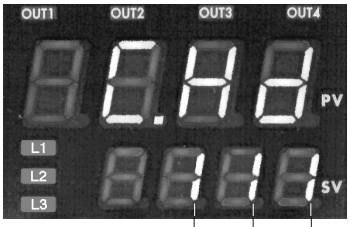

OUTPUT 2	OUTPUT 3	SERIAL COMMUNICATION
0 = None 1 = Relay	0 = None 1 = Relay	0 = None

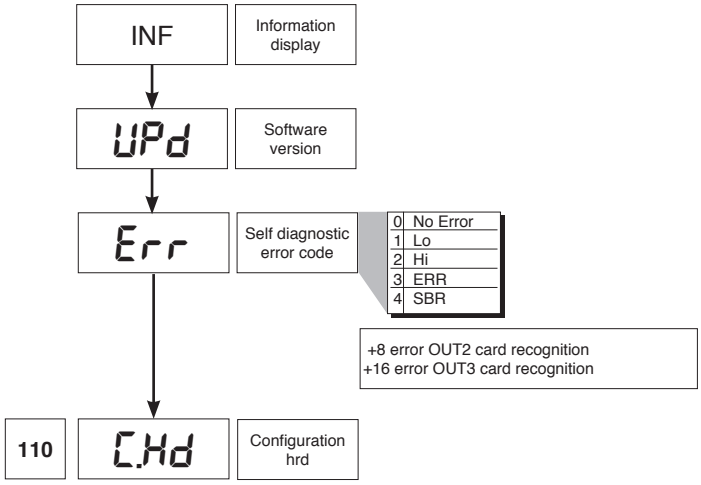

• CFG

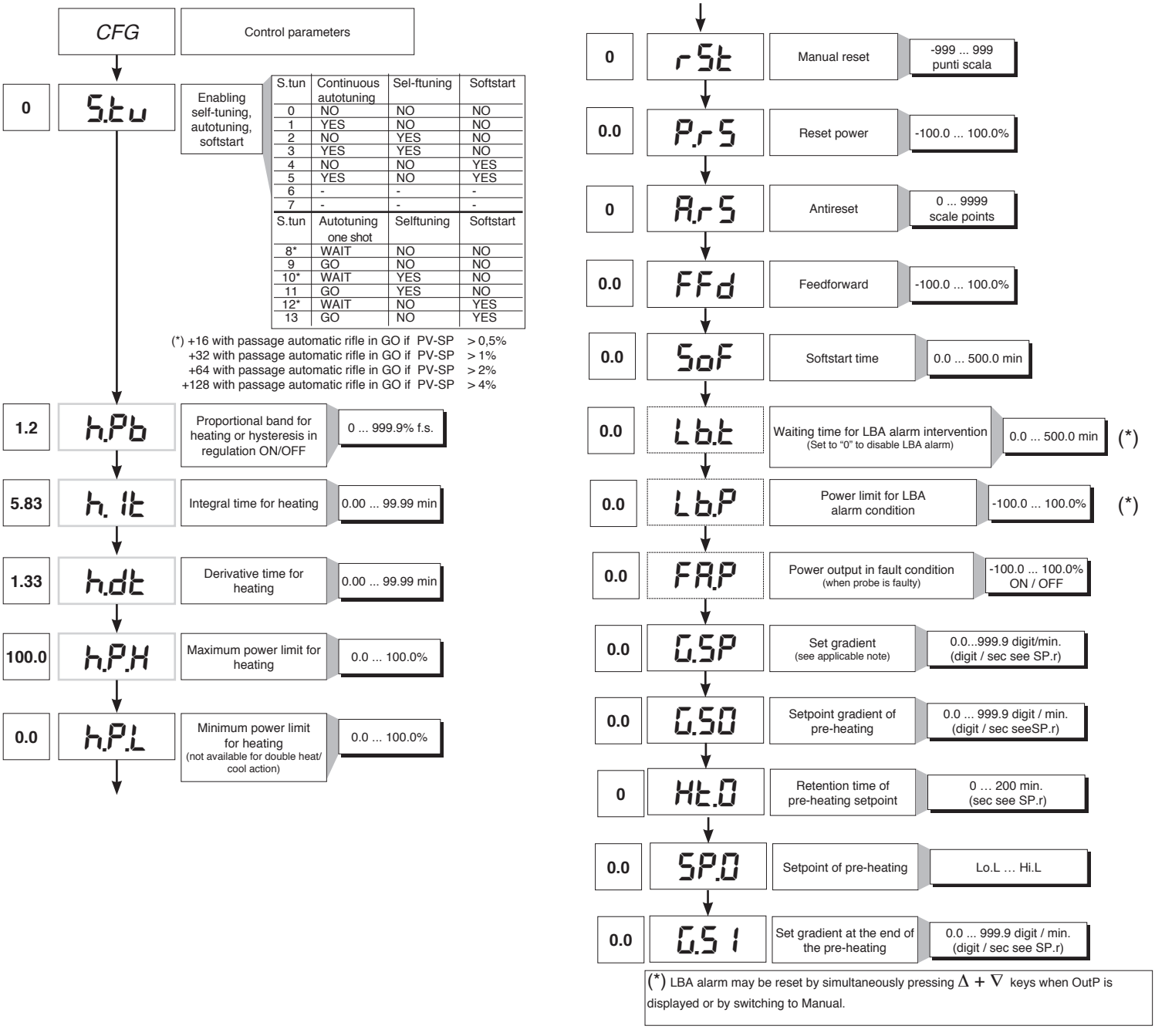

• InP

InP — Input settings

0 — SP.r — Def. remote setpoint — 0 default (remote setpoint present)

+2 Times of pre-heating and gradients of set digit/sec

30 — tYP. — Probe type, signal, enable custom linearization, and main input scale

Type	Probe type	without decimal point	with decimal point
	Sensore:	TC	
0	TC J °C	0/1000	0.0/999.9
1	TC J °F	32/1832	32.0/999.9
2	TC K °C	0/1300	0.0/999.9
3	TC K °F	32/2372	32.0/999.9
4	TC R °C	0/1750	0.0/999.9
5	TC R °F	32/3182	32.0/999.9
6	TC S °C	0/1750	0.0/999.9
7	TC S ° F	32/3182	32.0/999.9
8	TC T °C	-200/400	-199.9/400.0
9	TC T °F	-328/752	-199.9/752.0
28	TC	CUSTOM	CUSTOM
29	TC	CUSTOM	CUSTOM
30	PT100 °C	-200/850	-199.9/850.0
31	PT100 °F	-328/156 2	-199.9/999.9
32	JPT100 °C	-200/600	-199.9/600.0
33	JPT100 °F	-328/1112	-199.9/999.9
34	PTC °C	-55/120	-55.0/120.0
35	PTC °F	-67/248	-67.0/248.0
36	NTC °C	-10/70	-10.0/70.0
37	NTC °F	14/158	14.0/158.0
38	0...60 mV	-1999/9999	-199.9/999.9
39	0...60 mV	Custom scale	Custom scale
40	12...60 mV	-1999/9999	-199.9/999.9
41	12...60 mV	Custom scale	Custom scale
42	0...20 mA	-1999/9999	-199.9/999.9
43	0...20 mA	Custom scale	Custom scale
44	4...20 mA	-1999/9999	-199.9/999.9
45	4...20 mA	Custom scale	Custom scale
46	0...10 V	-1999/9999	-199.9/999.9
47	0...10 V	Custom scale	Custom scale
48	2...10 V	-1999/9999	-199.9/999.9
49	2...10 V	Custom scale	Custom scale
50	0...5 V	-1999/9999	-199.9/999.9
51	0...5 V	Custom scale	Custom scale
52	1...5 V	-1999/9999	-199.9/999.9
53	1...5 V	Custom scale	Custom scale
54	0...1 V	-1999/9999	-199.9/999.9
55	0...1 V	Custom scale	Custom scale
56	200mv..1V	-1999/9999	-199.9/999.9
57	200mv..1V	Custom scale	Custom scale
58	Cust10 V-20mA	-1999/9999	-199.9/999.9
59	Cust10 V-20mA	Custom scale	Custom scale
60	Cust 60mV	-1999/9999	-199.9/999.9
61	Cust 60mV	Custom scale	Custom scale
62	PT100-JPT	CUSTOM	CUSTOM
63	PTC	CUSTOM	CUSTOM
64	NTC	CUSTOM	CUSTOM

For custom linearization:
- LO signal is generated with variable below Lo.S or at minimum calibration value
- HI signal is generated with variable above Lo.S or at maximum calibration value

Max. non-linearity error for thermocouples (TC), resistors (PT100) and thermistors (PTC, NTC).

The error is calculated as deviation from theoretical value and is expressed as percentage of full scale (in °C).

S, R range 0...1750°C; error < 0.2% f.s. (t > 300°C) / for other range; error < 0.5% f.s.
T error < 0.2% f.s. (t > -150°C)
B range 44...1800°C; error < 0.5% f.s. (t > 300°C) / range 44,0...999,9; error < 1% f.s. (t > 300°C)
U range -99,9...99,9 and -99...99°C; error < 0.5% f.s. / for other range; error < 0.2% f.s. (t > -150°C)
G error < 0.2% f.s. (t > 300°C)
D error < 0.2% f.s. (t > 200°C)
C range 0...2300; error < 0.2% f.s. / for other range; error < 0.5% f.s.

NTC error < 0.5% f.s.

Tc: **J, K, E, N, L** error < 0,2% f.s.
JPT100 and **PTC** error < 0,2% f.s.
PT100 scale -200...850°C
Precision better than 0,2% f.s. at 25°C
In range 0...50°C:
- Precision better than 0,2% f.s. in range -200...400°C
- Precision better than 0,4% f.s. in range +400...850°C

(where f.s. refers to range -200... +850°C)

0.1 — FLt — Digital filter on input (if = 0 excludes averaging filter on sample value) — 0.0 ... 20.0 sec

0.5 — FLd — Digital filter on input display — 0 ... 9.9 scale points

1 — dP.S — Decimal point position for input scale

dP_S	Format
0	xxxx
1	xxx.x
2	xx.xx (*)
3	x.xxx (*)

(*) not available for TC, RTD, PTC and NTC scales

0.0 — Lo.S — Minimum limit of main input scale — min...max input range selected in tyP

850.0 — Hi.S — Maximum limit of main input scale — min...max input range selected in tyP

0 — oFS. — Offset correction of main input — -999 ... 999 scale points

30.0 — LoL — Lower limit for setting SP and absolute alarms — Lo.S ... Hi.S

130.0 — HiL — Upper limit for setting SP and absolute alarms — Lo.S ... Hi.S

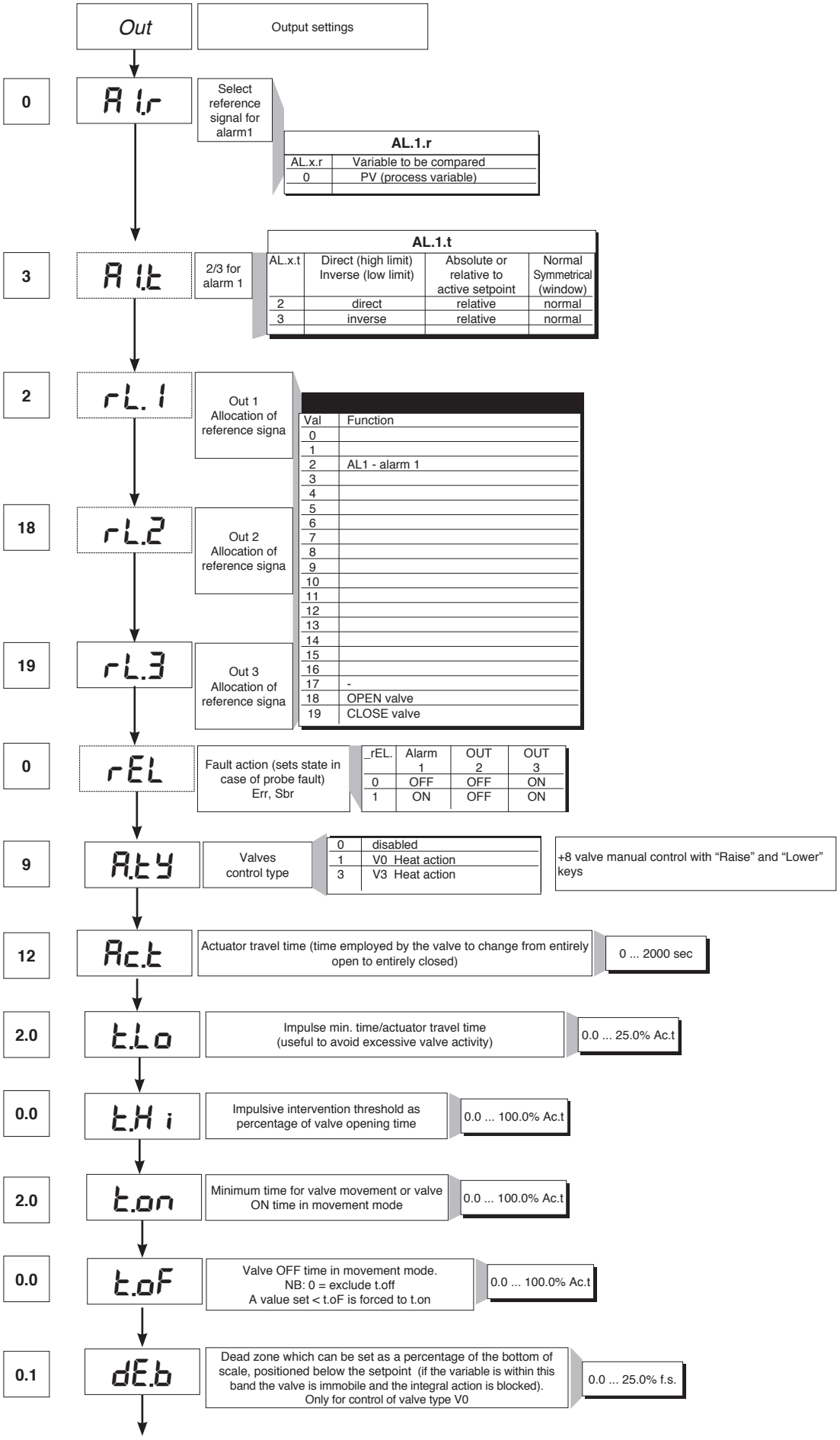
Out
Output settings
0
A 1.r
Select reference signal for alarm1
AL.1.r
AL.x.r
Variable to be compared
0
PV (process variable)
3
A 1.t
2/3 for alarm 1
AL.1.t
AL.x.t
Direct (high limit) Inverse (low limit)
Absolute or relative to active setpoint
Normal Symmetrical (window)
2
direct
relative
normal
3
inverse
relative
normal
2
rL. 1
Out 1 Allocation of reference signa
18
rL.2
Out 2 Allocation of reference signa
19
rL.3
Out 3 Allocation of reference signa
Val
Function
0
1
2
AL1 - alarm 1
3
4
5
6
7
8
9
10
11
12
13
14
15
16
17
-
18
OPEN valve
19
CLOSE valve
0
rEL
Fault action (sets state in case of probe fault) Err, Sbr
_rEL.
Alarm 1
OUT 2
OUT 3
0
OFF
OFF
ON
1
ON
OFF
ON
9
A.tY
Valves control type
0
disabled
1
V0 Heat action
3
V3 Heat action
+8 valve manual control with “Raise” and “Lower” keys
12
Ac.t
Actuator travel time (time employed by the valve to change from entirely open to entirely closed)
0 ... 2000 sec
2.0
t.Lo
Impulse min. time/actuator travel time (useful to avoid excessive valve activity)
0.0 ... 25.0% Ac.t
0.0
t.Hi
Impulsive intervention threshold as percentage of valve opening time
0.0 ... 100.0% Ac.t
2.0
t.on
Minimum time for valve movement or valve ON time in movement mode
0.0 ... 100.0% Ac.t
0.0
t.oF
Valve OFF time in movement mode.
NB: 0 = exclude t.off
A value set < t.oF is forced to t.on
0.0 ... 100.0% Ac.t
0.1
dE.b
Dead zone which can be set as a percentage of the bottom of scale, positioned below the setpoint (if the variable is within this band the valve is immobile and the integral action is blocked).
Only for control of valve type V0
0.0 ... 25.0% f.s.

• Prot

12 — *Pro* — Protection code

Prot	Display	Modification
0	SP, Hy.P, Hy.n, AL.2, AL.3, PoS, OuP, INF	SP, Hy.P , Hy.n, AL.2, AL.3, PoS
1	SP, Hy.P, Hy.n, AL.2, AL.3, PoS, OuP, INF	SP
2	SP, OuP, INF	

+ 4 to disable InP, Out
+ 8 to disable CFG
+ 16 to disable SW “power-up - power down”
+ 32 disable manual power latching
+ 64 to disable manual power modification
+128 enables full configuration

Note: OuP and INF only display configuration extended

• Hrd

Hrd — Hardware configuration

0 — *hd.1* — Enable multiset instrument control by serial

6 — *Ctr* — Control type

Val	Control type
0	P heat
1	
2	
3	PI heat
4	
5	
6	PID heat
7	
8	
9	ON-OFF heat
10	
11	
12	
13	
14	

Selection of derivative action sampling time:
+ 0 sample 1 sec.
+ 16 sample 4 sec.
+ 32 sample 8 sec.
+ 64 sample 240 msec.

Note: LbA alarm is not enabled with ON/OFF type control

1 — *AL.n* — Select number of enabled alarms

AL.nr	Alarme1	Alarm 2	Alarm 3
1	enabled	disabled	disabled

1 — *but.* — Function of M/A keys

butt	
0	No function (key disenabled))
1	MAN / AUTO controller
2	
3	HOLD
4	
5	
6	Start/Stop selftuning
7	Start/Stop autotuning
8	

+ 16 disables the “back menu” function (Auto/Man + F keys) in the configuration menus

0 — *dSP* — Defining SV display function

diSP	Lower display (SV) function
0	SSP - setpoint enabled
1	PoS - valve position
2	Control output value
3	Deviation (SSP - PV)

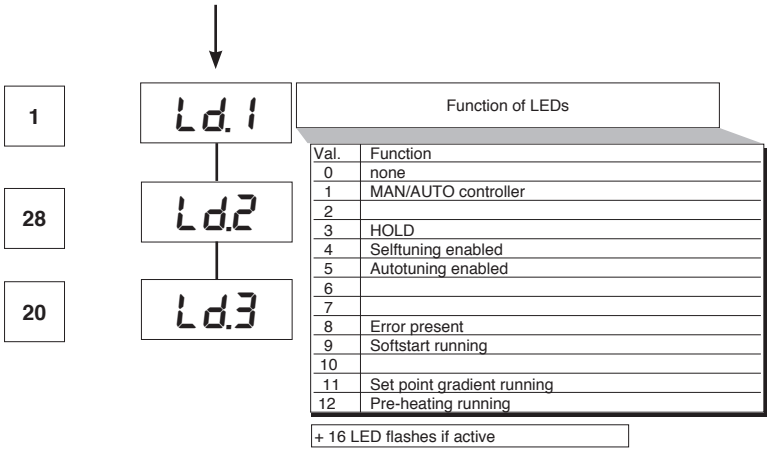

Val.	Function
0	none
1	MAN/AUTO controller
2	
3	HOLD
4	Selftuning enabled
5	Autotuning enabled
6	
7	
8	Error present
9	Softstart running
10	
11	Set point gradient running
12	Pre-heating running

+ 16 LED flashes if active

• Lin

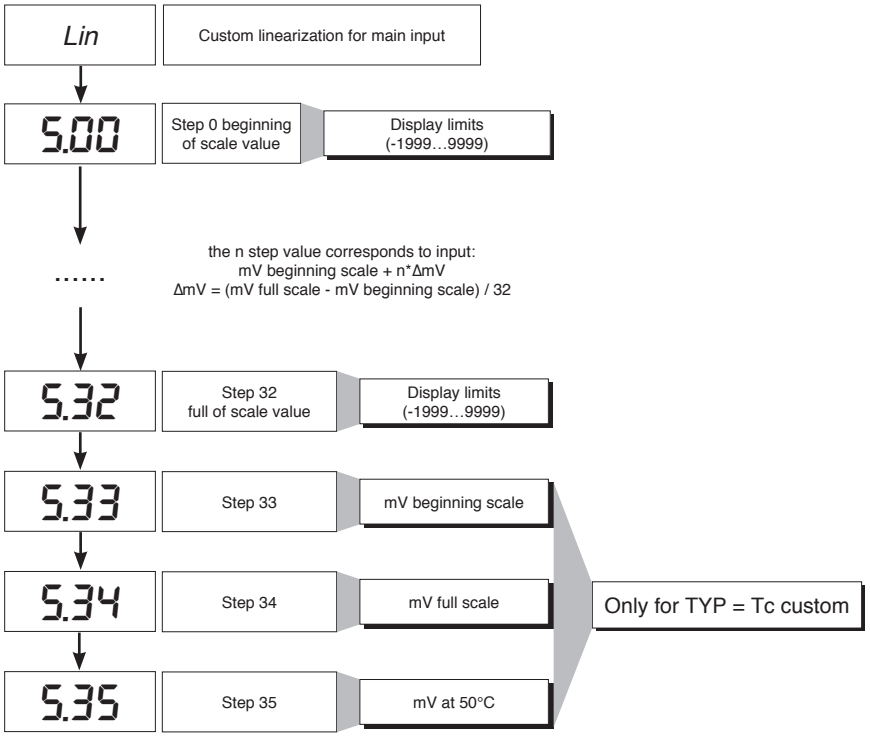

• U.CAL

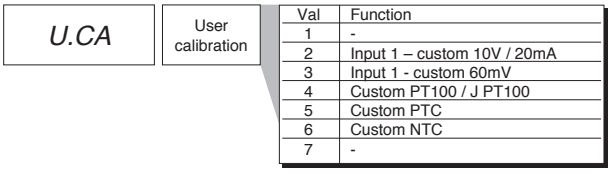

Val	Function
1	-
2	Input 1 – custom 10V / 20mA
3	Input 1 - custom 60mV
4	Custom PT100 / J PT100
5	Custom PTC
6	Custom NTC
7	-

7 • CONSENT FOR BURNER AL1

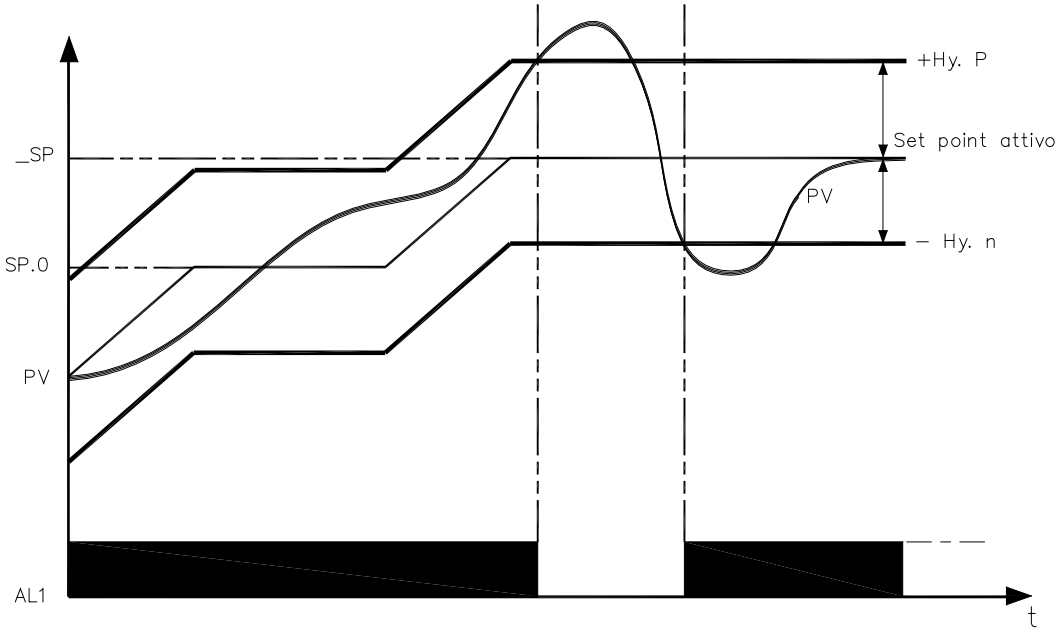

Obtain burner consent by configuring alarm 1 as inverse deviation with positive hysteresis Hy.P and negative hysteresis Hy.n

8 • PRE-HEATING FUNCTION

Enable the pre-heating function by setting parameters GS.0, Ht.0, GS.1 other than zero.
It consists of three phases that are activated sequentially at firing:

- **Ramp 0 phase**
  Enabled by setting GS.0 > 0. Starting from setpoint = PV (initial state), it reaches pre-heating set SP.0 with gradient GS.0
- **Maintenance phase**
  Enabled by setting Ht.0 > 0. Maintains pre-heating setpoint SP.0 for time Ht.0
- **Ramp 1 phase**
  Enabled by setting GS.1 > 0. Starting from pre-heating setpoint SP.0, it reaches active _SP set with gradient GS.1

In case of selftuning, the pre-heating function is not activated

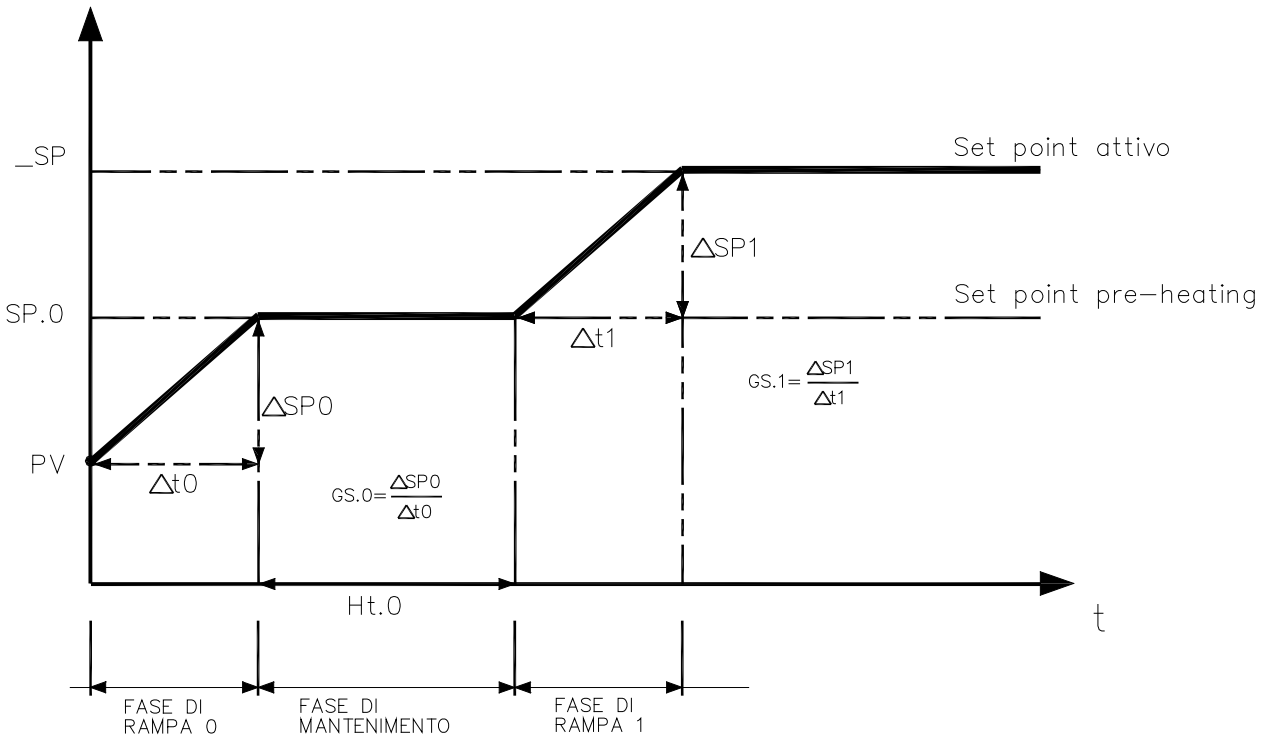

9 • ADJUSTMENT WITH MOTORIZED VALVE

In an adjustment process the adjustment valve has the function of varying fuel delivery (frequently corresponding to the thermal energy introduced into the process) in relation to the signal coming from the controller.
For this purpose it is provided with an actuator able to modify its opening value, overcoming the resistances produced by the fluid passing inside it.
The adjustment valves vary the delivery in a modulated manner, producing finite variations in the fluid passage inner area corresponding to finite variations of the actuator input signal, coming from the controller. The servomechanism, for example, comprises an electric motor, a reducer and a mechanical transmission system which actions the valve.
Various auxiliary components can be present such as the mechanical and electrical safety end travels, manual actioning systems.

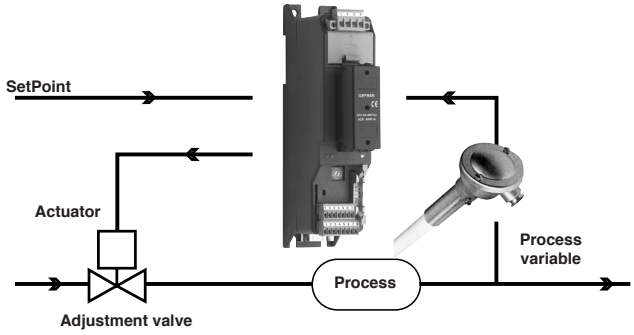

CONTROL EXAMPLE FOR V0 VALVE

The controller determines, on the basis of the dynamics of the process, the control output for the valve corresponding to the opening of the same in such a way so as to maintain the desired value of the process variable.

Characteristic parameters for valves control

- Actuator time (Ac.t) is the time employed by the valve to pass from entirely open to entirely closed (or vice-versa), and can be set with a resolution of one second. It is a mechanical feature of the valve+actuator unit.
NOTE: if the actuator's travel is mechanically limited it is necessary to proportionally reduce the Ac.t value.

- Minimum impulse (t.Lo) expressed as a % of the actuator time (resolution 0.1%).
Represents the minimum change in position corresponding to a minimum change in power supplied by the instrument below which the actuator will not physically respond to the command.
This represents the minimum variation in position due to which the actuator does not physically respond to the command.
The minimum duration of the movement can be set in t.Lo, expressed as a % of actuator time.
- Impulsive intervention threshold (t.Hi) expressed as a % of the actuator time (resolution 0.1%) represents the position displacement (requested position – real position) due to which the manoeuvre request becomes impulsive.

You can choose between 2 types of control:
1) ON time of movement = t.on and OFF time proportional to shift and greater than or equal to t.Lo (we recommend setting t.on = t.Lo) (set t.oF = 0).
2) ON time of movement = t.on and OFF time = t.oF. A value set for t.oF < t.on is forced to t.on. To activate this type, set t.oF < > 0.
The type of movement approach allows fine control of the reverse drive valve (from potentiometer or not), especially useful in cases of high mechanical inertia.
Set t.Hi = 0 to exclude modulation in positioning.
This type of modulated approach allows precise control of the feedback actioned valve, by a potentiometer or not, and is especially useful in cases of high mechanical inertia. Setting t.Hi = 0 excludes modulation in positioning.

- Dead zone(dE.b) is a displacement band between the adjustment setpoint and the process variable within which the controller does not supply any command to the valve (Open = OFF; Close = OFF). It is expressed as a percentage of the bottom scale and is positioned below the setpoint.
The dead zone is useful in an operative process to avoid straining the actuator with repeated commands and an insignificant effect on the adjustment. Setting dE.b = 0 the dead zone is excluded.

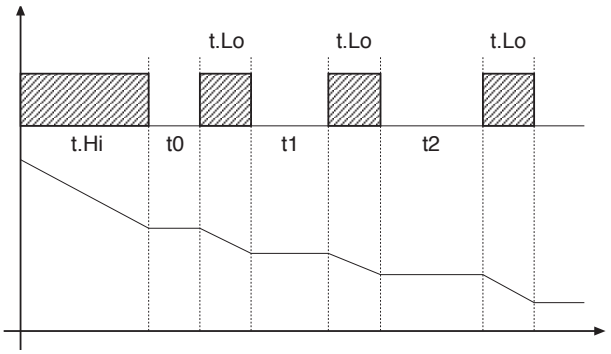

Graph of behavior inside the band with integral time ≠ 0.

With integral time = 0, movement ON time is always equal to OFF time.

t0 = t.Lo

Valve control modes

With the controller in manual, the setting of parameter At.y ≥ 8 allows direct control of the valve open and close commands through the keyboard Increments and Decrements on the front seats.

V0 - for floating valve without potentiometer

Model V0 have similar behaviour: every manoeuvre request greater than the minimum impulse t.Lo is sent to the actuator by means of the OPEN/CLOSE relays; every action updates the presumed position of the virtual potentiometer calculated on the basis of the actuator travel declared time.
In this way there is always a presumed position of the valve which is compared with the position request of the controller.
Having reached a presumed extreme position (entirely open or entirely closed determined by the “virtual potentiometer”) the controller provides a command in the same direction, in this way ensuring the real extreme position is reached (minimum command time = t.on).
The actuators are usually protected against the OPEN command in the entirely open position or CLOSE command in the entirely closed position.

V3 - for floating valve, PI control

When the difference between the position calculated by the controller and the only proportional component exceeds the value corresponding to the minimum impulse t.Lo the controller provides an OPEN or CLOSE command of the duration of the minimum impulse itself t.Lo.
At each delivery the integral component of the command is set to zero (discharge of the integral).
The frequency and duration of the impulses is correlated to the integral time (h.it or c.it).

Non-movement behavior
t.Hi = 0: with power = 100% or 0.0%, the corresponding open or close outputs always remain enabled (safety status).

Movement behavior
t.Hi < > 0: with position attained corresponding to 100% or 0.0%, the corresponding open or close outputs are switched off.

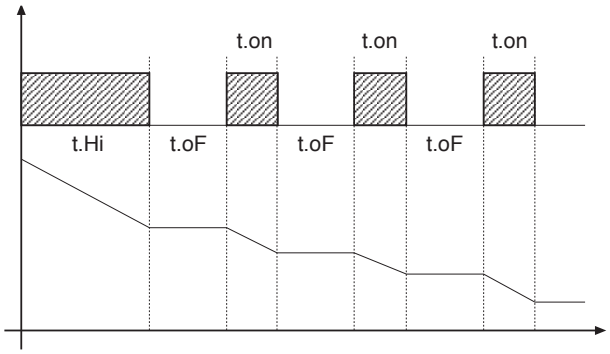

If t.oF = 0, current function is maintained.

If t.oF ≠ 0 movement mode will be as shown on the graph

10 • CONTROL ACTIONS

Proportional Action:
action in which contribution to output is proportional to deviation at input (deviation = difference between controlled variable and setpoint).
Derivative Action:
action in which contribution to output is proportional to rate of variation input deviation.
Integral Action:
action in which contribution to output is proportional to integral of time of input deviation.

Influence of Proportional, Derivative and Integral actions on response of process under control

* An increase in P.B. reduces oscillations but increases deviation.
* A reduction in P.B. reduces the deviation but provokes oscillations of the controlled variable (the system tends to be unstable if P.B. value is too low).
* An increase in Derivative Action corresponds to an increase in Derivative Time, reduces deviation and prevents oscillation up to a critical value of Derivative Time, beyond which deviation increases and prolonged oscillations occur.
* An increase in Integral Action corresponds to a reduction in Integral Time, and tends to eliminate deviation between the controlled variable and the setpoint when the system is running at rated speed.
If the Integral Time value is too long (Weak integral action), deviation between the controlled variable and the setpoint may persist.
Contact GEFRAN for more information on control actions.

11 • MANUAL TUNING

A) Enter the setpoint at its working value.
B) Set the proportional band at 0.1% (with on-off type setting).
C) Switch to automatic and observe the behavior of the variable. It will be similar to that in the figure:

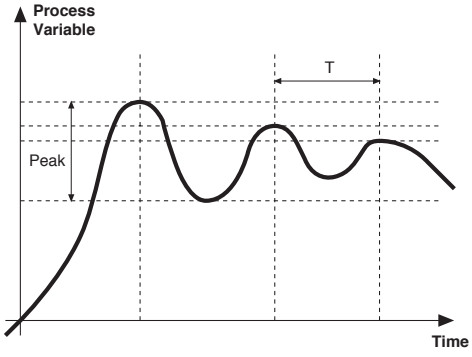

D) The PID parameters are calculated s follows: Proportional band

$$P.B.= \frac{Peak}{(V\ max - V\ min)} \times 100$$

(V max - V min) is the scale range.
Integral time: It = 1.5 x T
Derivative time: dt = It/4
E) Switch the unit to manual, set the calculated parameters. Return to PID action by setting the appropriate relay output cycle time, and switch back to Automatic.
F) If possible, to optimize parameters, change the setpoint and check temporary response. If an oscillation persists, increase the proportional band. If the response is too slow, reduce it.

12 • SET GRADIENT

SET GRADIENT: if set to ≠0, the setpoint is assumed equal to PV at power-on and auto/man switchover. With gradient set, it reaches the local setpoint. Every variation in setpoint is subject to a gradient.
The set gradient is inhibited at power-on when self-tuning is engaged.
If the set gradient is set to ≠0, it is active even with variations of the local setpoint.
The control setpoint reaches the set value at the speed defined by the gradient.

13 • SOFTWARE ON / OFF SWITCHING FUNCTION

How to switch the unit OFF: hold down the “F” and “Raise” keys simultaneously for 5 seconds to deactivate the unit, which will go to the OFF state while keeping the line supply connected and keeping the process value displayed. The SV display is OFF.
All outputs (alarms and controls) are OFF (logic level 0, relays de-energized) and all unit functions are disabled except the switch-on function and digital communication.
How to switch the unit ON: hold down the “F” key for 5 seconds and the unit will switch OFF to ON. If there is a power failure during the OFF state, the unit will remain in OFF state at the next power-up (ON/OFF state is memorized).
The function is normally enabled, but can be disabled by setting the parameter Prot = Prot +16.

14 • SELF-TUNING

The function works for single output systems (heating or cooling). The self-tuning action calculates optimum control parameter values during process startup. The variable (for example, temperature) must be that assumed at zero power (room temperature).
The controller supplies maximum power until an intermediate value between starting value and setpoint is reached, after which it zeros power.
PID parameters are calculated by measuring overshoot and the time needed to reach peak. When calculations are finished, the system disables automatically and the control proceeds until the setpoint is reached.

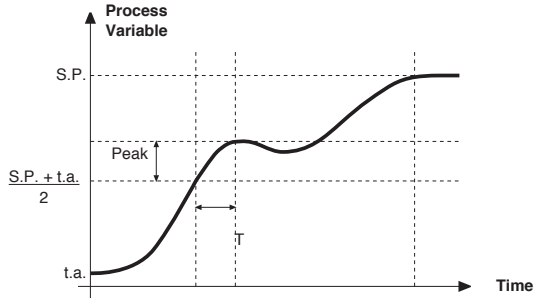

How to activate self-tuning:
A. Activation at power-on
1. Set the setpoint to the required value
2. Enable selftuning by setting the Stun parameter to 2 (CFG menu)
3. Turn off the instrument
4. Make sure the temperature is near room temperature
5. Turn on the instrument again

B. Activation from keyboard
1. Make sure that key M/A is enabled for Start/Stop selftuning (code but = 6 Hrd menu)
2. Bring the temperature near room temperature
3. Set the setpoint to the required value
4. Press key M/A to activate selftuning (Attention: selftuning interrupts if the key is pressed again)

The procedure runs automatically until finished, when the new PID parameters are stored: proportional band, integral and derivative times calculated for the active action (heating or cooling). In case of double action (heating or cooling), parameters for the opposite action are calculated by maintaining the initial ratio between parameters (ex.: CPb = HPb * K; where K = CPb / HPb when self-tuning starts). When finished, the Stun code is automatically cancelled.

Notes :
-The procedure does not start if the temperature is higher than the setpoint (heating control mode) or if the temperature is lower than the setpoint (cooling control mode). In this case , the Stu code is not cancelled.
-It is advisable to eneable one of the configurable LEDs to signal selftuning status.By setting one of parameters
LED1, LED2, LED3=4 or 20 on the Hrd menu, the respective LED will be on or flashing when selftuning is active.

15 • ACCESSORIES

• Interface for instrument configuration

KIT PC USB / RS485 o TTL

Kit for PC via the USB port (Windows environment) for GEFRAN instruments configuration:
Lets you read or write all of the parameters
• A single software for all models
• Easy and rapid configuration
• Saving and management of parameter recipes
• On-line trend and saving of historical data
Component Kit:
- Connection cable PC USB ... port TTL
- Connection cable PC USB ... RS485 port
- Serial line converter
- CD SW GF Express installation

• ORDERING CODE

GF_eXK-2-0-0	cod F049095

16 • ORDER CODE

600V [R] [R] [R] [-]

UTPUT 1	
Relay	R

UTPUT 2	
Relay	R

UTPUT 3	
Relay	R

POWER SUPPLY	
0	11...27Vac/dc
1	100...240Vac

• WARNINGS

WARNING: this symbol indicates danger. It is placed near the power supply circuit and near high-voltage relay contacts.

Read the following warnings before installing, connecting or using the device:

• follow instructions precisely when connecting the device.
• always use cables that are suitable for the voltage and current levels indicated in the technical specifications.
• the device has no ON/OFF switch: it switches on immediately when power is turned on. For safety reasons, devices permanently connected to the power supply require a two-phase disconnecting switch with proper marking. Such switch must be located near the device and must be easily reachable by the user. A single switch can control several units.
• if the device is connected to electrically NON-ISOLATED equipment (e.g. thermocouples), a grounding wire must be applied to assure that this connection is not made directly through the machine structure.
• if the device is used in applications where there is risk of injury to persons and/or damage to machines or materials, it MUST be used with auxiliary alarm units. You should be able to check the correct operation of such units during normal operation of the device.
• before using the device, the user must check that all device parameters are correctly set in order to avoid injury to persons and/or damage to property.
• the device must NOT be used in infiammable or explosive environments. It may be connected to units operating in such environments only by means of suitable interfaces in conformity to local safety regulations.
• the device contains components that are sensitive to static electrical discharges. Therefore, take appropriate precautions when handling electronic circuit boards in order to prevent permanent damage to these components.

***Installation*:** installation category II, pollution level 2, double isolation
The equipment is intended for permanent indoor installations within their own enclosure or panel mounted enclosing the rear housing and exposed terminals on the back.
• only for low power supply: supply from Class 2 or low voltage limited energy source
• power supply lines must be separated from device input and output lines; always check that the supply voltage matches the voltage indicated on the device label.
• install the instrumentation separately from the relays and power switching devices
• do not install high-power remote switches, contactors, relays, thyristor power units (particularly if “phase angle” type), motors, etc... in the same cabinet.
• avoid dust, humidity, corrosive gases and heat sources.
• do not close the ventilation holes; working temperature must be in the range of 0...50°C.
• surrounding air: 50°C
• use 60/75°C copper (Cu) conductor only, wire size range 2x No 22 - 14AWG, Solid/Stranded
• use terminal tightening torque 0.5N m
If the device has faston terminals, they must be protected and isolated; if the device has screw terminals, wires should be attached at least in pairs.
• *Power*: supplied from a disconnecting switch with fuse for the device section; path of wires from switch to devices should be as straight as possible; the same supply should not be used to power relays, contactors, solenoid valves, etc.; if the voltage waveform is strongly distorted by thyristor switching units or by electric motors, it is recommended that an isolation transformer be used only for the devices, connecting the screen to ground; it is important for the electrical system to have a good ground connection; voltage between neutral and ground must not exceed 1V and resistance must be less than 6Ohm; if the supply voltage is highly variable, use a voltage stabilizer for the device; use line filters in the vicinity of high frequency generators or arc welders; power supply lines must be separated from device input and output lines; always check that the supply voltage matches the voltage indicated on the device label.
• *Input and output connections*: external connected circuits must have double insulation; to connect analog inputs (TC, RTD) you have to: physically separate input wiring from power supply wiring, from output wiring, and from power connections; use twisted and screened cables, with screen connected to ground at only one point; to connect adjustment and alarm outputs (contactors, solenoid valves, motors, fans, etc.), install RC groups (resistor and capacitor in series) in parallel with inductive loads that work in AC *(Note: all capacitors must conform to VDE standards (class x2) and support at least 220 VAC. Resistors must be at least 2W)*; fit a 1N4007 diode in parallel with the coil of inductive loads that operate in DC.

GEFRAN spa will not be held liable for any injury to persons and/or damage to property deriving from tampering, from any incorrect or erroneous use, or from any use not conforming to the device specifications.

Set-up for 600V RRR0-1-T73 regulator

Set up for temperature probe Pt100 (ex Siemens QAE2120 130°C max.)

The regulator comes out of the factory preset with the corresponding values of the Siemens RWF40.000 and RWF50.2x

Verify wiring of the sensor

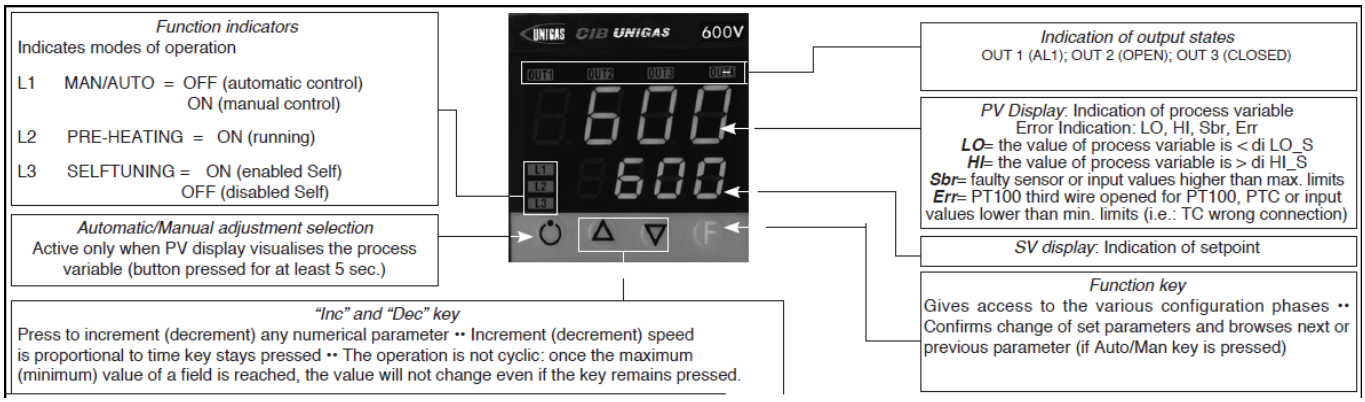

Regulation of the set-point **= 80**
It can be modified by using arrows "up" and "down".
By pushing **F** you go to parameters:

Hy.P	5 (hysteresis positive for output 1, terminals 21-22 (ex Q13-Q14)
Hy.n	-5 hysteresis negative for output ,1 terminals 21-22 (ex Q13-Q14)

Keep pushing **F** until you see **PASS**, release **F** and through the arrows set **99**, push **F** and visualize **Pro** (protection code) default is **12**, through the arrows set **128** and push **F,** keep it pushed until all parameters **InF**, **CFG**, **InP**, **Out**, **PASS** are visualized.

CFG	
S.tun	0
hPb	1,2
hIt	5,83
hdt	1,33
…	

InP	
….	
tyP	30 (Pt100)
…	
dP_S	1 (decimals num.)
Lo.S	0 (min. sensor scale)
Hi.S	850,0 (max sensor scale)
oFS	0 (offset of input correction)
Lo.L	30,0 (lower set-point range limit)
Hi.L	130,0 (upper set-point range limit)

Out	
A1.r	0
…	
A1.t	3 (operating mode AL1 =inverse-relative-normal)
…	
rL.1	2 (AL1)
rL.2	18 (open)
rL.3	19 (close)
rEL	0
A.ty	9 (type of servocontrol command)
Ac.t	12 (servocontrol running time: SQN72.4…/STA12..=12; SQM40.265=30)
t_Lo	2
t_Hi	0.0
t.on	2
t.oF	0.0
dE.b	0,1 (dead zone in % of end scale)

PAS	99 then push and keep pushed **F** until visualization of **Hrd**
Hrd	
…	
CtrL	6 (PID warm)
AL.nr	1
but	1
diSP	0
Ld.1	1
Ld.2	28
Ld.3	20

Keep pushed **F** until you visualize **PASS**, release **F** and through the arrows set **99**, push **F** and visualize **Pro** (protection code) from **128**, through the arrows, bring it back to **12,** and keep **F** pushed until you come back to set-point value.

Manual operation :
Keep pushed the lower left key for at least 5 sec.
The instrument will enter the "MAN" mode (see also "Ld1" switching on).
Through the arrows, "Open" and "Close" outputs are activated.
To come back to normal working keep the lower left key pushed for at least 5 sec.

Software switch off :
By keeping pushed keys **Arrow up** + **F** for more than 5 sec. the instrument switches off the software, does not command the outputs and visualize only the variable of process measured by the probe.
To restore keep pushed **F** for more than 5 sec.

Set up for temperature probe Pt100 for high temperature (350°C max.)

Verify wiring of the sensor

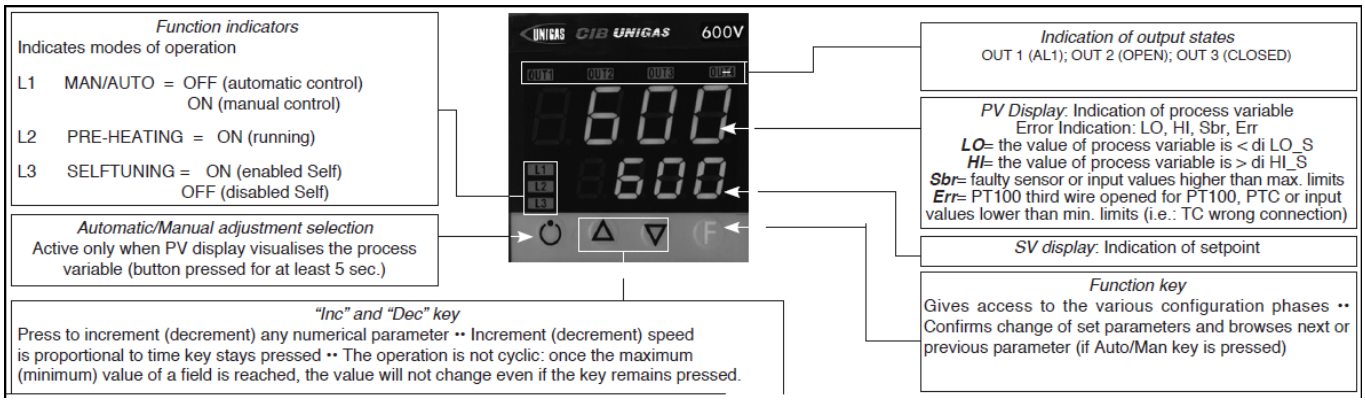

Regulation of the set-point = **80**
It can be modified by using arrows "up" and "down".
By pushing **F** you go to parameters:

Hy.P	10 (hysteresis positive for output 1 terminals 21-22 (ex Q13-Q14)
Hy.n	-5 (hysteresis negative for output 1 terminals 21-22 (ex Q13-Q14)

Keep pushing **F** until you see **PASS**, release **F** and through the arrows set **99**, push **F** and visualize **Pro** (protection code) default is **12**, through the arrows set **128** and push **F,** keep it pushed until all parameters **InF**, **CFG**, **InP**, **Out**, **PASS** are visualized.

CFG	
S.tun	0
hPb	1,2
hIt	5,83
hdt	1,33
…	

InP	
….	
tyP	30 (Pt100)
…	
dP_S	1 (decimals num.)
Lo.S	0 (min. sensor scale)
Hi.S	850,0 (max sensor scale)
oFS	0 (offset of input correction)
Lo.L	0,0 (lower set-point range limit)
Hi.L	350,0 (upper set-point range limit)

Out	
A1.r	0
…	
A1.t	3 (mode AL1 =inverse-relative-normal)
…	
rL.1	2 (AL1)
rL.2	18 (open)
rL.3	19 (close)
rEL	0
A.ty	9 (type of servocontrol command)
Ac.t	12 (servocontrol running time: SQN72.4…/STA12..=12; SQM40.265=30)
t_Lo	2
t_Hi	0.0
t.on	2
t.oF	0.0
dE.b	0,1 (dead zone in % of end scale)

PAS	99 then push and keep pushed **F** until visualization of **Hrd**
Hrd	
…	
CtrL	6 (PID warm)
AL.nr	1
but	1
diSP	0
Ld.1	1
Ld.2	28
Ld.3	20

Keep pushed **F** until you visualize **PASS**, release **F** and through the arrows set **99**, push **F** and visualize **Pro** (protection code) from **128**, through the arrows, bring it back to **12,** and keep **F** pushed until you come back to set-point value.

Manual operation:
Keep pushed the lower left key for at least 5 sec.
The instrument will enter the "MAN" mode (see also "Ld1" switching on).
Through the arrows, "Open" and "Close" outputs are activated.
To come back to normal working keep the lower left key pushed for at least 5 sec.

Software switch off :
By keeping pushed keys **Arrow up** + **F** for more than 5 sec. the instrument switches off the software, does not command the outputs and visualize only the variable of process measured by the probe.
To restore keep pushed **F** for more than 5 sec.

Set up for pressure transmitter 2 wires signal 4÷20mA

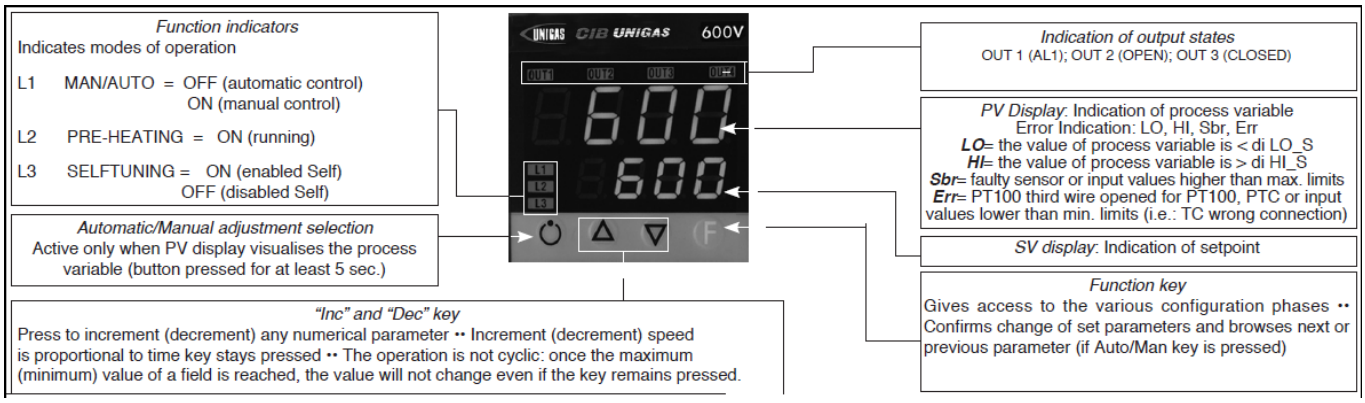

With pressure transmitters first we need to enable their power supply: remove the part as shown below, then, on the CPU unit, move the bridge from Pt100 to +Vt

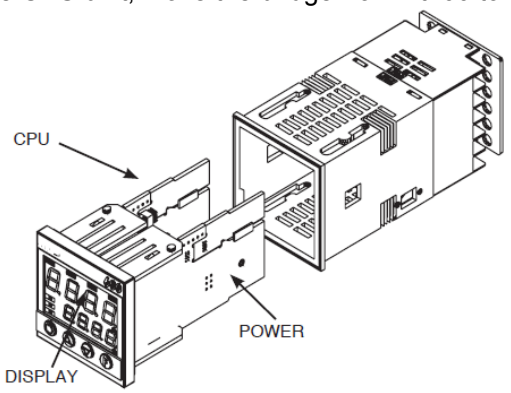

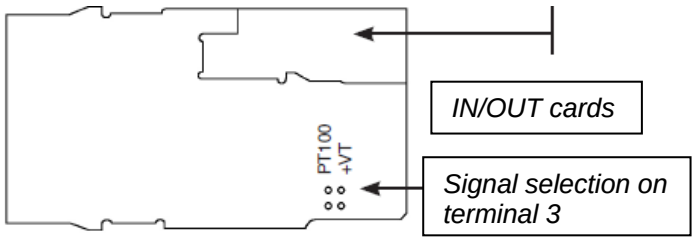

Verify wiring of the sensor

Impostazione set-point

Transmitter	**1,6bar**	**3bar**	**10bar**	**16bar**	**25bar**	**40bar**
Set-point	1bar	1,5bar	6bar	6bar	6bar	6bar

To modify it directly use "up" and "down" arrows.
By pushing **F** you go to parameter:

Transmitter	**1,6bar**	**3bar**	**10bar**	**16bar**	**25bar**	**40bar**
Hy.P	0,2bar	0,5bar	0,5bar	0,8bar	1,25bar	2bar
Hy.n	0bar	0bar	0bar	0bar	0bar	0bar

Keep pushing **F** until you see **PASS**, release **F** and through the arrows set **99**, push **F** and visualize **Pro** (protection code) default is **12**, through the arrows set **128** and push **F,** keep it pushed until all parameters **InF**, **CFG**, **InP**, **Out**, **PASS** are visualized.

CFG	
S.tun	0
hPb	5
hIt	1,33
hdt	0,33
…	

InP	
….	
tyP	44 (4÷20mA)
…	
dP_S	2 (decimals num.)

Transmitter	**1,6bar**	**3bar**	**10bar**	**16bar**	**25bar**	**40bar**	
Lo.S	0,00	0,00	0,00	0,00	0,00	0,00	min. sensor scale
Hi.S	1,60	3,00	10,00	16,00	25,00	40,00	max sensor scale
oFS	0	0	0	0	0	0	offset of input correction
Lo.L	0,00	0,00	0,00	0,00	0,00	0,00	lower set-point setting
Hi.L	1,60	3,00	10,00	16,00	25,00	40,00	upper set-point setting

Out	
A1.r	0
…	
A1.t	3 (mode AL1 =inverse-relative-normal)
…	
rL.1	2 (AL1)
rL.2	18 (open)
rL.3	19 (close)
rEL	0
A.ty	9 (type of servocontrol command)
Ac.t	12 (servocontrol running time: SQN72.4…/STA12..=12; SQM40.265=30)
t_Lo	2
t_Hi	0.0
t.on	2
t.oF	0.0
dE.b	0,1 (dead zone in % of end scale)

PAS	99 then push and keep pushed **F** until visualization of **Hrd**
Hrd	
…	
CtrL	6 (PID warm)
AL.nr	1
but	1
diSP	0
Ld.1	1
Ld.2	28
Ld.3	20

Keep pushed **F** until you visualize **PASS**, release **F** and through the arrows set **99**, push **F** and visualize **Pro** (protection code) from **128**, through the arrows, bring it back to **12,** and keep **F** pushed until you come back to set-point value.

Manual operation:
Keep pushed the lower left key for at least 5 sec.
The instrument will enter the "MAN" mode (see also "Ld1" switching on).
Through the arrows, "Open" and "Close" outputs are activated.
To come back to normal working keep the lower left key pushed for at least 5 sec.

Software switch off :
By keeping pushed keys **Arrow up** + **F** for more than 5 sec. the instrument switches off the software, does not command the outputs and visualize only the variable of process measured by the probe.
To restore keep pushed **F** for more than 5 sec.

Set -up for thermocouples type **K** or **J**

Verify wiring of the sensor

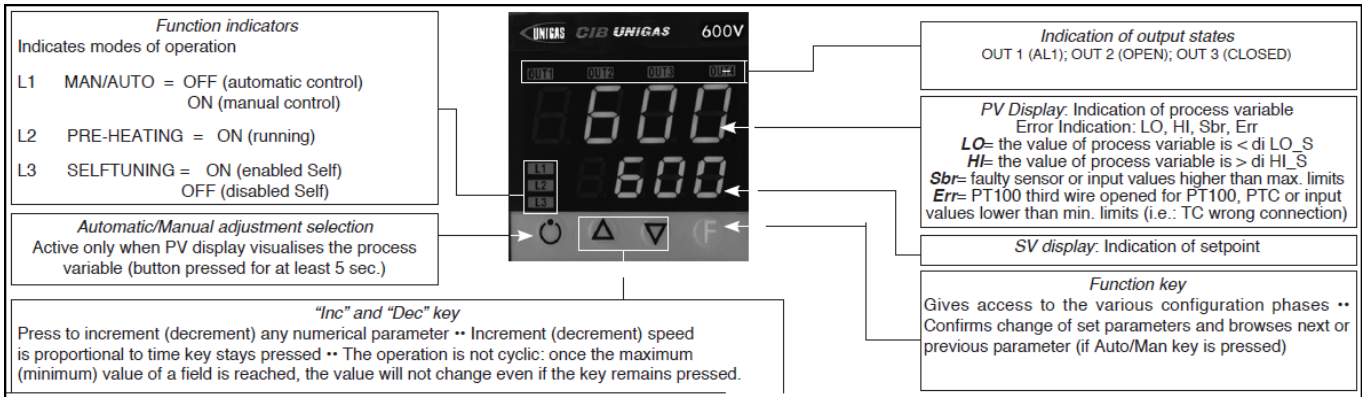

Regulation of the set-point = **80**
It can be modified by using arrows "up" and "down".
By pushing **F** you go to parameters:

Hy.P	10 (hysteresis positive for output 1 terminals 21-22 (ex Q13-Q14)
Hy.n	-5 (hysteresis negative for output 1 terminals 21-22 (ex Q13-Q14)

Keep pushing **F** until you see **PASS**, release **F** and through the arrows set **99**, push **F** and visualize **Pro** (protection code) default is **12**, through the arrows set **128** and push **F,** keep it pushed until all parameters **InF**, **CFG**, **InP**, **Out**, **PASS** are visualized.

CFG	
S.tun	0
hPb	1,2
hIt	5,83
hdt	1,33
…	

InP	
….	
tyP	2 (thermocouple **K** 0÷1300°C) / 0 (thermocouple **J** 0÷1000°C)
…	
dP_S	0 (no decimal) / 1 (1 decimal)
Lo.S	0 (min. sensor scale)
Hi.S	1300 (max sensor scale for tc **K**) / 1000 (max sensor scale for tc **J**)
oFS	0 (offset of input correction)
Lo.L	0 (lower set-point range limit)
Hi.L	1300 (upper set-point range limit) per tc **K** / 1000 for tc **J**

Out	
A1.r	0
…	
A1.t	3 (mode AL1 =inverse-relative-normal)
…	
rL.1	2 (AL1)
rL.2	18 (open)
rL.3	19 (close)
rEL	0
A.ty	9 (type of servocontrol command)
Ac.t	12 (servocontrol running time: SQN72.4…/STA12..=12; SQM40.265=30)
t_Lo	2
t_Hi	0.0
t.on	2
t.oF	0.0
dE.b	0,1 (dead zone in % of end scale)

PAS	99 then push and keep pushed **F** until visualization of **Hrd**
Hrd	
…	
CtrL	6 (PID warm)
AL.nr	1
but	1
diSP	0
Ld.1	1
Ld.2	28
Ld.3	20

Keep pushed **F** until you visualize **PASS**, release **F** and through the arrows set **99**, push **F** and visualize **Pro** (protection code) from **128**, through the arrows, bring it back to **12,** and keep **F** pushed until you come back to set-point value.

Manual operation:
Keep pushed the lower left key for at least 5 sec.
The instrument will enter the "MAN" mode (see also "Ld1" switching on).
Through the arrows, "Open" and "Close" outputs are activated.
To come back to normal working keep the lower left key pushed for at least 5 sec.

Software switch off :
By keeping pushed keys **Arrow up** + **F** for more than 5 sec. the instrument switches off the software, does not command the outputs and visualize only the variable of process measured by the probe.
To restore keep pushed **F** for more than 5 sec.

MANUAL FOR OPERATION AND CALIBRATION

MODULATOR

SIEMENS RWF 40….

M12905CH Rev. 07 11/09

INSTRUMENT MOUNTING

Mount the instrument using the relevant mounts as illustrated in the figure.

To wire the instrument and sensors, follow the instructions given on the burner's wiring diagrams.

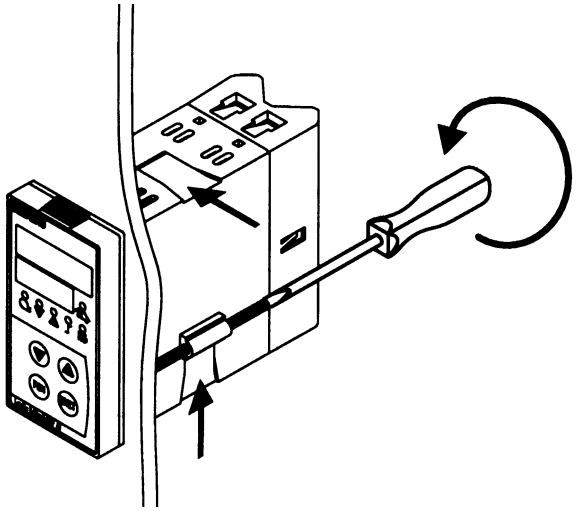

INSTRUMENT FRONTAL PANEL

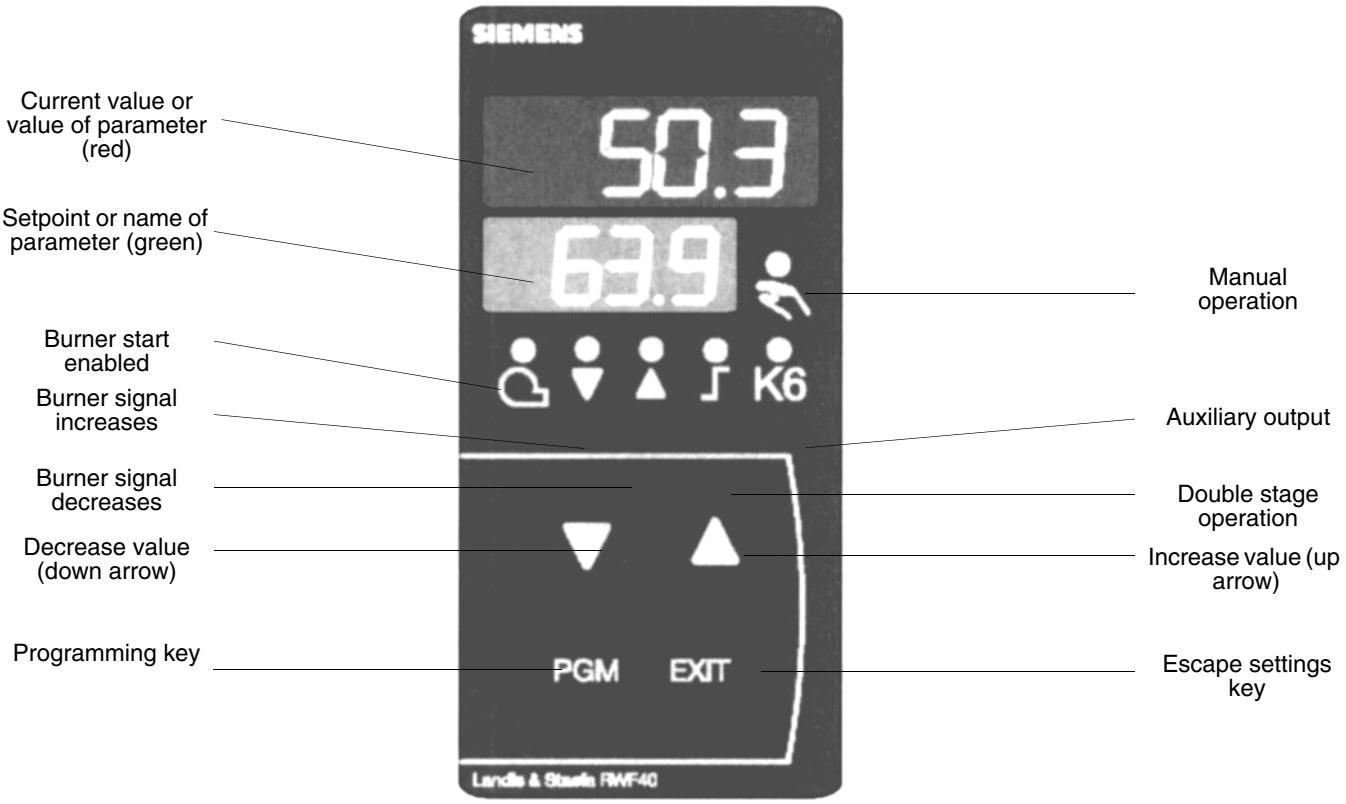

INSTRUMENT SETTINGS

The instrument comes with a number of factory settings that are good for 90% of cases. However, you can set or edit parameters proceeding as follows

1. Setting or editing of setpoint value

With the burner switched off (thermostat/pressure switch series contacts open, i.e. terminals 3-4 open), press the PGM key, holding it down for less than 2 sec.. The display at the bottom (green) reads SP1: use the up and down arrows to set the setpoint value on the display at the top (red).

To confirm the value, press the **PGM** key, then press **EXIT** to return to normal operation.

2. Checking or editing the instrument's PID parameters (table 1 attached)

- Press the PGM key, holding it down for longer than 2 sec.. The code AL appears on the green display whilst the red display reads 0
- reads **0**.
- To change, use the up and down arrows to change the value on the red display.
- To confirm, press PGM and the green display moves on to the next parameter.
- Repeat the previous operations for all parameters.
- To stop, press the EXIT key.
- For a list of PID parameters, see table (1) attached.

3. Setting the kind of sensor to be connected to the instrument (table 2 attached)

- With the instrument in normal operating mode, press the **PGM** key, holding it down for 2 sec.. The instrument enters PID parameter configuration mode, hence press the **PGM** key for another 2 sec.
- The green display features the code **C111** whilst the red display gives the code **9030**.
- Each digit of the code corresponds to a settable parameter
- When the down arrow is pressed, the first digit on the left (n°9) on the red display starts flashing. Pressing the up arrow while the digit is flashing, you can change the value according to table (2) attached .
- Once you have edited the value, press the down arrow again and the second digit from the left (n°0) starts flashing and so on for all four digits. Press **PGM** to confirm and **EXIT** to exit.

Example: temperature sensor, set **9030**; pressure sensor, set **G030**.

4. C112 and C113 configurations (tables 3 & 4 attached) :

Configurations **C112** and **C113** enable use of an auxiliary contact (terminals Q63-Q64 and LED K6 on the front panel), which is fully configurable.

It also allows you to choose between degrees Celsius °C or Fahrenheit °F and to lock the instrument's keys.

With the instrument in normal operating mode, press the **PGM** key, holding it down for 2 sec.. The instrument enters PID parameter configuration mode, hence press the **PGM** key for another 2 sec..

The code **C111** appears on the green display whilst the red display reads **9030**. If you press **PGM** again, the green display reads **C112** and the red display reads **0110**.

For the instrument to work as standard, the **C112** configuration should never be altered, whilst the **C113** configuration should be changed when using pressure sensors or 0-10V / 0.4-20mA signals (see table (5) attached).

5. Configuring process values:

With the instrument in normal operating mode, press the **PGM** key for 2 sec.. The instrument enters PID parameter configuration mode. The code **C111** appears on the green display, whilst the code 9030 (or different code depending on settings made previously) appears on the red display. If you press **PGM** again, the code becomes **C112** and the red display reads 0010. When you next press **PGM**, the code becomes **C113** and the red display reads 0110. When you next press **PGM**, the green display reads **SCL** (=lower limit [instrument range start] for analogue input 1, valid for signals 0-10V, 0-20mA, 4-20mA, 0-100ohms etc.). Use the up arrow or down arrow to set the chosen value (see table (5) attached).

If you press the **PGM** key again, the green display reads **SCH** (=upper limit [instrument range end] for analogue input 1, valid for input signals 0-10V, 0-20mA, 4-20mA, 0-100ohms etc.). Use the up and down arrow to set the chosen value (see table (5) attached).

Example: for SIEMENS pressure sensor QBE2.. P25 (25bar), the input signal used is 0-10V: set **SCL** to 0 and **SCH** to 2500. That way the instrument's scale ranges from 0 to 2500 kPa (25 bar).

Pressing the **PGM** key repeatedly calls up the following parameters in sequence. These parameters can be edited with the up and down arrows:

SCL2:lower limit for analogue input 2 (same as SCL but for input 2 - factory setting 0);

SCH2:upper limit for analogue input 2 (same as SCH but for input 2 - factory setting 100);

SPL: lower setpoint limit (same as SCL but for setpoint - factory setting 0);

SPH: upper setpoint limit (same as SCH but for setpoint - factory setting 100);

Example: for SIEMENS pressure sensor QBE2.. P25 (25bar), the input signal used is 0-10V: if you want to work between 5 and 19 bar, set **SPL** to 500 and **SPH** to 1900 (kPa). That way the setpoint scale can be set between 500 and 1900 kPa (5 and 19 bar).

OFF1:correction for analogue input 1 (factory setting 0)

OFF2:correction for analogue input 2 (factory setting 0)

OFF3:correction for analogue input 3 (factory setting 0)

HYST:"K6" auxiliary contact differential (factory setting 1)

dF1: delay applied to sensor signal to prevent transients (range 0-100sec.; factory setting 1 sec.)

6. Manual control

- To control burner output manually, press the **EXIT** key for 5 sec. with the burner operating - the LED with the hand symbol lights.
- At this point, use the up arrow and down arrow to increase or decrease burner output.
- To exit manual mode, press the **EXIT** key.
- NB: Every time the controller switches the burner off (start enabled LED off - Q13-Q14 contact open), manual mode is disabled when the burner is switched back on.

7. Instrument self-setting (auto-tuning)

- If the burner in the steady state does not respond properly to heat generator requests, you can activate the instrument's self-setting function, which recalculates PID values for its operation, deciding which are most suitable for the specific kind of request
- To activate this function, proceed as follows:
- Press the **PGM** key and down arrow at the same time.
- The green display reads tunE and the instrument forces the burner to increase and decrease output.
- During these output oscillations, the instrument calculates the PID parameters (proportional band, integral time, derivative time).
- At the end of calculations, the tunE function switches off automatically and the instrument has stored the new parameters.
- If you want to disable the self-setting function, press the up arrow once it has started.
- PID parameters calculated by the instrument can be edited at any time following the procedure illustrated earlier in point 2.

Note:

If no key is pressed for ~10sec. during the instrument's setting, the instrument automatically exits setting mode and returns to normal operating mode.

TABLE 1 - "PID" PARAMETERS AND RELEVANT FACTORY SETTINGS

Parameter	Display	Values range	Factory setting	Remarks
Limit value for auxiliary contact (*)	AL	from -1999 to 9999 digit	0	Do not alter
Auxiliary contact switching differential (*)	HYST	from 0 to 999.9 digit	1	Do not alter
Proportional band (*)	PB.1	from 0.1 to 9999 digit	10	Typical value for temperature
Derivative action	dt	from 0 to 9999 sec.	80	Typical value for temperature
Integral action	rt	from 0 to 9999 sec.	350	Typical value for temperature
Dead band (*)	db	from 0 to 999.9 digit	1	Typical value
Servocontrol running time	tt	from 10 to 3000 sec.	15	Set servocontrol running time
Switch-on differential (*)	HYS1	from 0.0 to -199.9 digit	-5	Value under setpoint below which the burner switches back on (Q13-Q14 closes)
Lower switch-off differential (*)	HYS2	from 0.0 to HYS3	3	Do not alter
Upper switch-off differential (*)	HYS3	from 0.0 to 999.9 digit	5	Value over setpoint above which the burner switches off (Q13-Q14 opens)
Modulating response threshold	q	from 0.0 to 999.9	0	Do not alter
Weather compensation gradient	H	from 0.0 to 4	1	Do not alter
Ambient temperature parallel displacement (*)	P	from -90 to +90	0	Do not alter

(*) Parameters affected by setting of decimal place (C113 configuration 01X0)

TABLE 2 - INPUTS CONFIGURATION C111

Red display				
Analog input 1	**1^ digit**	**2^ digit**	**3^ digit**	**4^ digit**
Pt100 3 wires	0			
Pt100 22 wires	1			
Ni100 3 wires	2			
Ni100 22 wires	3			
Pt1000 3 wires	4			
Pt 1000 22 wires	5			
Ni1000 3 wires DIN 43760	6			
Ni1000 22 wires DIN 43760	7			
Ni1000 3 wires Siemens	8			
Ni1000 22 wires Siemens	9			
Thermocoupling K NiCr-Ni	A			
Thermocoupling T Cu-Con	b			
Thermocoupling N NiCrSil-NiSil	C			
Thermocoupling J Fe-Con	d			
Signal 0 ÷ 20 mA	E			
Signal 4 ÷ 20 mA	F			
Signal 0 ÷ 10 V	G			
Signal 0 ÷ 1 V	H			
Analog input 2				
none		0		
external set point WFG		1		
external set point 0 ÷ 20 mA		2		
external set point 4 ÷ 20 mA		3		
external set point 0 ÷ 10 V		4		
external set point 0 ÷ 1 V		5		
analog shift set-point WFG		6		
analog shift set-point 0 ÷ 20 mA		7		
analog shift set-point 4 ÷ 20 mA		8		
analog shift set-point 0 ÷ 10 V		9		
analog shift set-point 0 ÷ 1 V		A		
Analog input 3				
none			0	
external themperature sensor Pt 1000 22 wires			1	
xternal themperature sensor Ni1000 22 wires DIN			2	
xternal themperature sensor Ni1000 22 wires Siemens			3	
Input D2 - Logic functions				
none				0
changeover set-point				1
V shift set-point				2
Typical settings				
Siemens sensors QAE2../QAC2../QAM2..	**9**	**0**	**3**	**0**
Factory sensors Pt1000 30÷130 °C	**5**	**0**	**3**	**0**
Factory sensors Pt1000 0 ÷ 350 °C	**5**	**0**	**3**	**0**
Pressure probes QBE... 3 wires (signal 0 ÷ 10 V)	**G**	**0**	**3**	**0**
Pressure probes MBS... 2 wires (signal 4 ÷ 20 mA)	**F**	**0**	**3**	**0**
Probes Pt100 3 wires	**0**	**0**	**3**	**0**
Thermocouplings K type	**A**	**0**	**3**	**0**
Signal 4 ÷ 20 mA	**F**	**0**	**3**	**0**

TABLE 3 - CONFIGURATION C112

Red display	1^ digit	2^ digit	3^ digit	4^ digit
Auxiliary limit switch K6				
none	**0**			
lk1 function for input 1	1			
lk2 function for input 1	2			
lk3 function for input 1	3			
lk4 function for input 1	4			
lk5 function for input 1	5			
lk6 function for input1	6			
lk7 function for input 1	7			
lk8 function for input 2	8			
lk7 function for input 2	9			
lk8 function for input 2	A			
lk7 function for input 3	b			
lk8 function for input 3	C			
Type of instrumentoutput control				
3 points (relay type)		**0**		
DC 0 ÷ 20 mA (*)		1		
DC 4 ÷ 20 mA (*)		2		
DC 0 ÷ 10 V (*)		3		
Set-point SP1				
SP1set with keys			0	
SP1 dependent on outside sensor (analogue input 3 must be configured)			**1**	
Parameter lock				
no keyboard lock				**0**
configuration level block				1
parameters level block PID				2
total block				3
Factory settings	**0**	**0**	**1**	**0**

Note: (*) for RWF 40.002 only

TABLE 4 - CONFIGURATION C113

Red display	**1^ digit**	**2^ digit**	**3^ digit**	**4^ digit**
Instrument addresses (for RWF 40.003 only				
address 0	**0**			
address 1	0	**1**		
address...	...	...		
address 99	9	9		
Unit of measurement and decimal place				
°C without decimal			0	
°C and 1 decimal			**1**	
°F without decimal			2	
°F and 1 decimal			3	
Activation of "K6"				
limit contact OFF				**0**
limit contact ON				1
Factory settings	**0**	**1**	**1**	**0**

TABLE 5 - SUMMARY OF STANDARD PARAMETER SETTINGS

	PARAMETERS TO BE EDITED											
SENSORS/PROBES	**C111**	**C113**	**SCL**	**SCH**	**SPL**	**SPH**	**HYS1 (*)**	**HYS3 (*)**	**Pb. 1**	**dt**	**rt**	**SP1 (*)**
Siemens QAE2120.010	9030	0110	-	-	30	95	-5	5	10	80	350	80°C
Siemens QAM2120.040	9030	0110	-	-	0	80	-2,5	2,5	10	80	350	40°C
Pt1000 (130°C max.)	5030	0110	-	-	30	95	-5	5	10	80	350	80°C
Pt1000 (350°C max.)	5030	0110	-	-	0	350	-5	10	10	80	350	80°C
Pt100 (130°C max.)	0030	0110	-	-	0	95	-5	5	10	80	350	80°C
Pt100 (350°C max)	0030	0110	-	-	0	350	-5	10	10	80	350	80°C
Termocouple K	A030	0110	-	-	0	1200	-5	20	10	80	350	80°C
Danfoss/Siemens 4÷20mA p 1,6 bar	F030	0100	0	160	0	160	0	20	5	20	80	100kPa
Danfoss/Siemens 4÷20mA p 10 bar	F030	0100	0	1000	0	1000	0	50	5	20	80	600kPa
Danfoss/Siemens 4÷20mA p 16 bar	F030	0100	0	1600	0	1600	0	80	5	20	80	600kPa
Danfoss/Siemens 4÷20mA p 25 bar	F030	0100	0	2500	0	2500	0	125	5	20	80	600kPa
Danfoss/Siemens 4÷20mA p 40 bar	F030	0100	0	4000	0	4000	0	200	5	20	80	600kPa
Siemens QBE2.. P4	G030	0100	0	400	0	400	0	20	5	20	80	200kPa
Siemens QBE2.. P10	G030	0100	0	1000	0	1000	0	50	5	20	80	600kPa
Siemens QBE2.. P16	G030	0100	0	1600	0	1600	0	80	5	20	80	600kPa
Siemens QBE2.. P25	G030	0100	0	2500	0	2500	0	125	5	20	80	600kPa
Siemens QBE2.. P40	G030	0100	0	4000	0	4000	0	200	5	20	80	600kPa
Signal 0÷10V	G030	to be fixed	to be fixed	to be fixed	to be fixed	to be fixed	to be fixed	to be fixed	5	20	80	to be fixed
Signal 4÷20mA	F030	to be fixed	to be fixed	to be fixed	to be fixed	to be fixed	to be fixed	to be fixed	5	20	80	to be fixed
tt - servocontrol run	12 sec.	Servocontrol Berger STA12B…/Siemens SQN30.251/Siemens SQN72.4A4A20										
tt - servocontrol run	13 sec.	Servocontrol Berger STA13B...										
tt - servocontrol run	15 sec.	Servocontrol Berger STA15B...										
tt - servocontrol run	30 sec.	Servocontrol Siemens SQL33.03/Siemens SQM10/Siemens SQM50/Siemens SQM54/Berger STM30../ Siemens SQM40.265										

NOTES

(*) These values are factory set - values must be set during operation at the plant based on the real working temperature/pressure value.

WARNING

With pressure sensors, parameters SP1, SCH, SCL, HYS1, HYS3 must be selected and displayed in kPa (kilo Pascal).
(1bar = 100,000Pa = 100kPa)

Probe electric connection :

With 7 pins connector version

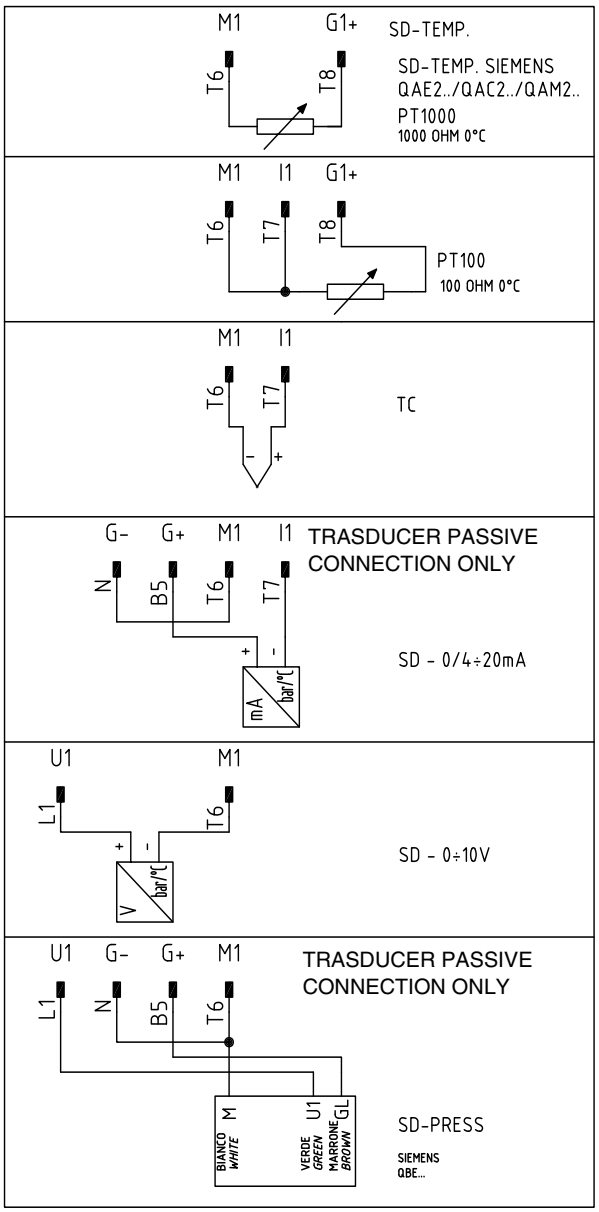

With terminals version

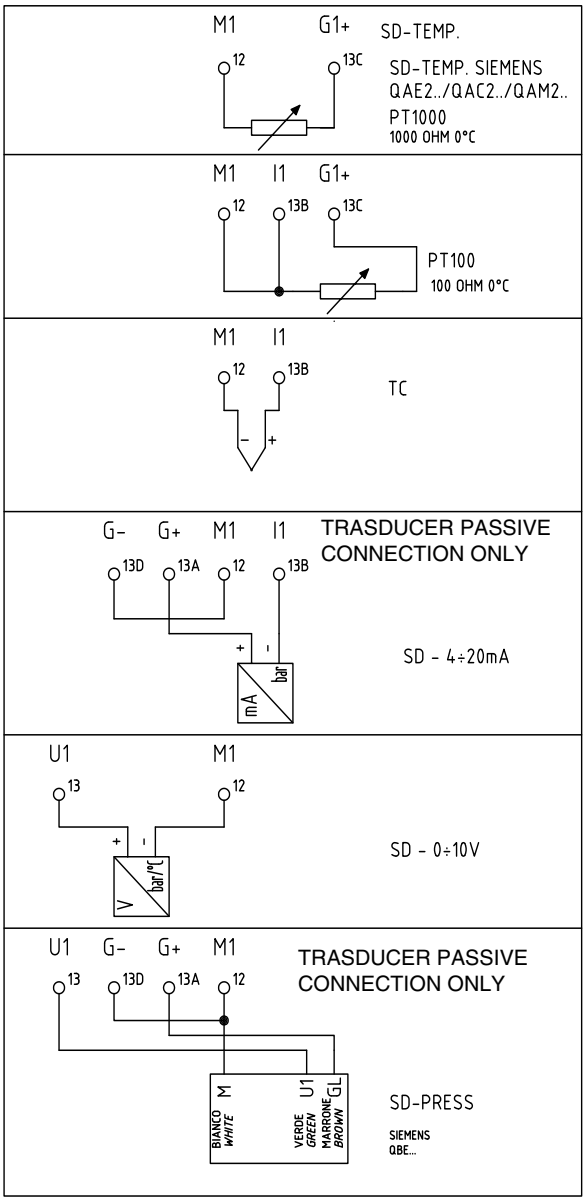

With external setpoint

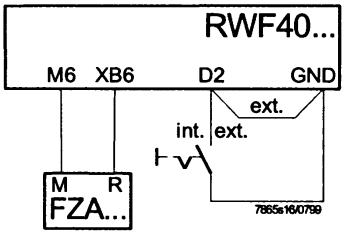

C111 configuration code = X1X1

With setpoint modified by independent management system

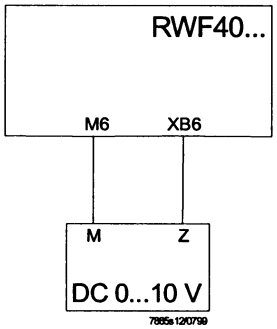

C111 configuration code = X9XX

SCH2= 0.5x (SPH - SPL)
SCL2= -0.5 x (SPH - SPL)

Example:
SPH= max. 130° C
SPL= min. 30° C
SCH2= 0.5 x (130 - 30) = 50
SCL2= -0.5 x (130 - 30) = -50

APPENDIX: PROBES CONNECTION

To assure the utmost comfort, the control system needs reliable information, which can be obtained provided the sensors have been installed correctly.

Sensors measure and transmit all variations encountered at their location.

Measurement is taken based on design features (time constant) and according to specific operating conditions.

With wiring run in raceways, the sheath (or pipe) containing the wires must be plugged at the sensor's terminal board so that currents of air cannot affect the sensor's measurements

Ambient probes (or ambient thermostats)

Installation

The sensors (or room thermostats) must be located in reference rooms in a position where they can take real temperature measurements without being affected by foreign factors.

It's good to be admired …even better to be effective

Heating systems: the room sensor must not be installed in rooms with heating units complete with thermostatic valves. Avoid all sources of heat foreign to the system.

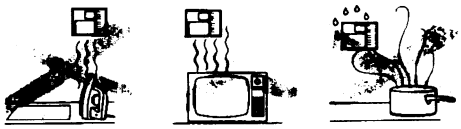

Location

On an inner wall on the other side of the room to heating units height above floor 1.5 m, at least 1.5 m away from external sources of heat (or cold)

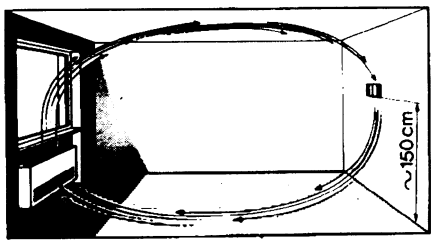

Installation position to be avoided

near shelving or alcoves and recesses, near doors or windows, inside outer walls exposed to solar radiation or currents of cold air, on inner walls with heating system pipes, domestic hot water pipes, or cooling system pipes running through them.

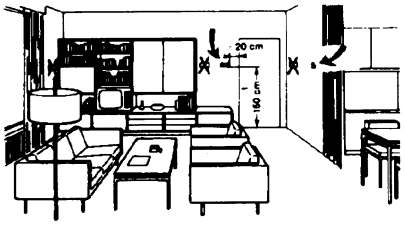

Outside probes (weather)

Installation

In heating or air-conditioning systems featuring adjustment in response to outside temperature, the sensor's positioning is of paramount importance.

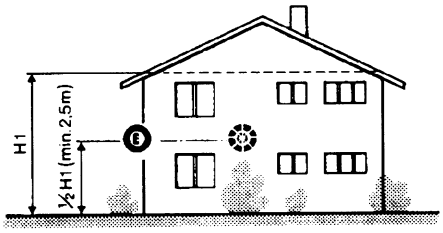

General rule: on the outer wall of the building where the living rooms are, never on the south-facing wall or in a position where they will be affected by morning sun. If in any doubt, place them on the north or north-east façade

Positions to be avoided

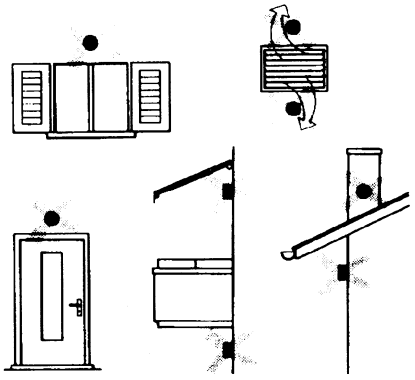

Avoid installing near windows, vents, outside the boiler room, on chimney breasts or where they are protected by balconies, cantilever roofs.

The sensor must not be painted (measurement error).

Duct or pipe sensors

Installing temperature sensors

For measuring outlet air:

- after delivery fan or
- after coil to be controlled, at a distance of at least 0,5 m

For measuring room temperature:

- before return air intake fan and near room's return air intake. For measuring saturation temperature: after mist eliminator.

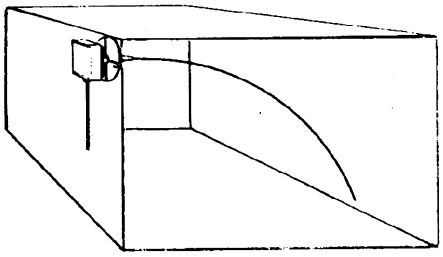

Bend 0.4m sensor by hand (never use tools) as illustrated.

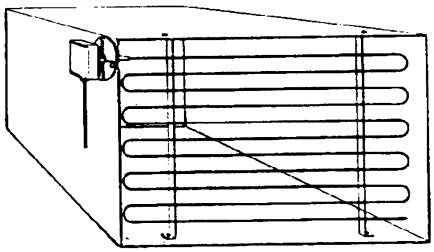

Use whole cross-section of duct, min. distance from walls 50 mm, radius of curvature 10 mm for 2m or 6m sensors.

Installing combined humidity sensors

As max. humidity limit sensor on outlet (steam humidifiers).

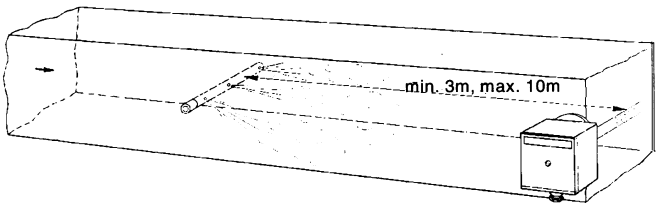

Installing pressure sensors

A - installation on ducts carrying fluids at max. temperature 80°C

B - installation on ducts at temperature over 80°C and for refrigerants

C - installation on ducts at high temperatures:

- increase length of siphon
- place sensor at side to prevent it being hit by hot air coming from the pipe.

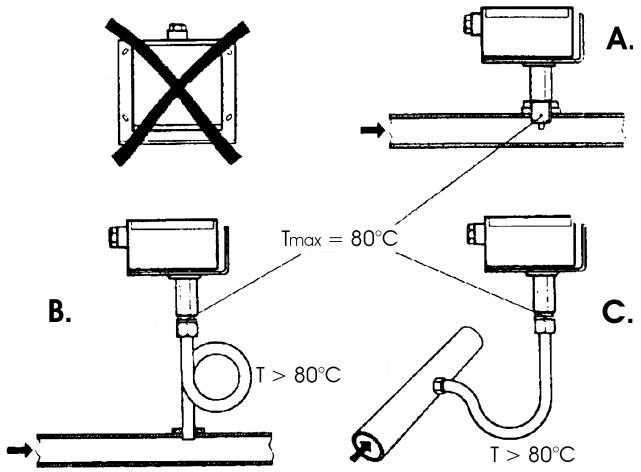

Installing differential pressure sensors for water

- Installation with casing facing down not allowed.-With temperature over 80°C, siphons are needed
- To avoid damaging the sensor, you must comply with the following instructions

when installing:

- make sure pressure difference is not greater than the value permitted by the sensor
- when there are high static pressures, make sure you insert shutoff valves A-B-C.

Putting into operation

start disable

1=open C1=open C

2=open A2=close B

3=open B3=close A

4= close C

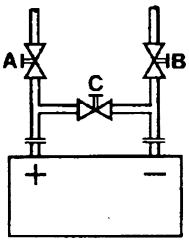

Immersion or strap-on sensors

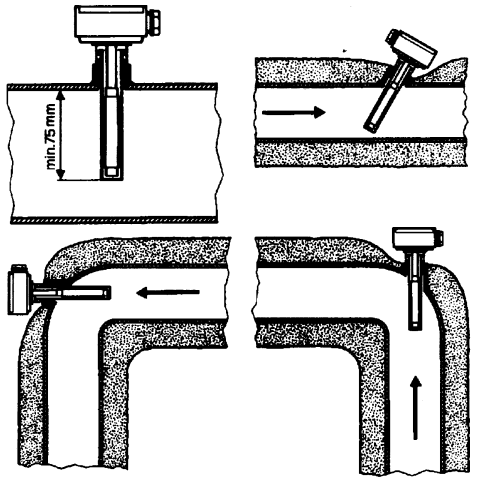

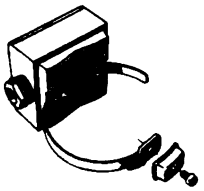

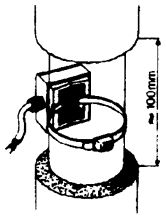

Immersion probes mounting

Sensors must be installed on the stretch of pipe in which fluid circulates all the time.

The rigid stem (sensing element doing the measuring) must be inserted by at least 75mm and must face the direction of flow.

Recommended locations: on a bend or on a straight stretch of pipe but tilted by 45° and against the flow of fluid.

Protect them to prevent water from infiltrating (dripping gates, condensation from pipes etc.)

Installing QAD2.. strap-on sensors

Make sure fluid is circulating in the chosen location.

Eliminate insulation and paintwork (including rust inhibitor) on a min. 100mm length of pipe.

Sensors come with straps for pipes up to 100 mm in diameter

Placing the probes (QAD22.../QAE21.../QAP21.../RCA...)

With pumps on outlet

with 3 ways valves / with 4 ways valves

Panel system / burner control

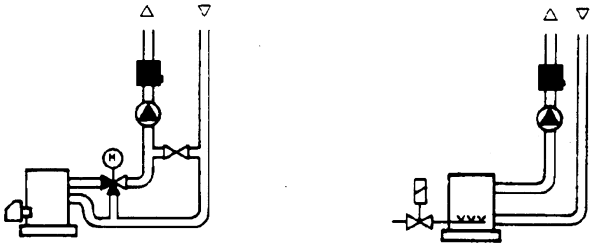

With pumps on return

with 3 ways valves / with 4 ways valves

Strap-on or immersion sensors?

QAD2.. strap-on sensors

Advantages

- 10 sec. time constant
- Installed with system running (no plumbing work)
- Installation can be changed easily if it proves incorrect.

Limits:

Suitable for pipe diameters max. 100 mm

- Can be affected by currents of air etc.

QAE2... immersion sensors

Advantages

- Measure "mean" fluid temperature
- No external influence on measurement such as: currents of air, nearby pipes etc.

Limits

- Time constant with sheath: 20 sec.
- Hard to change installation position if it proves incorrect.

Duct pressure switches and sensors

Installing differential pressure probes for air

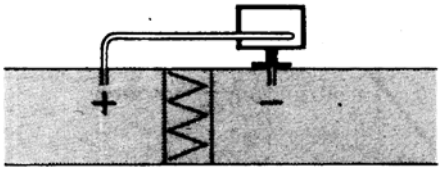

A - Control a filter (clogging)

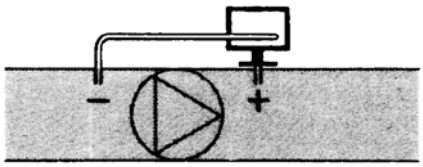

B - Control a fan (upstream/downstream)

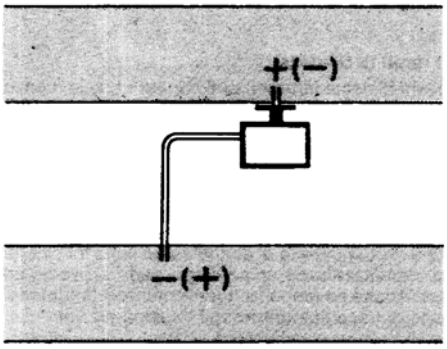

C - Measurement of difference in pressure between two ducts

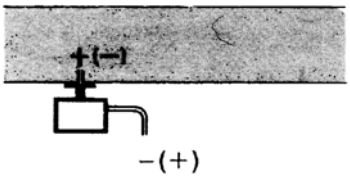

D - Measurement of difference in pressure between two rooms or of inside of duct and outside

Basic principles

Measuring static pressure (i.e. pressure exerted by air on pipe walls)

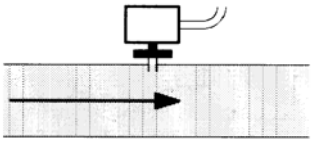

Measuring dinamic pressure

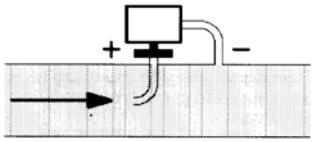

$$Pd = \frac{y\,\vartheta^2}{2g}$$

Key

y	kg/m3, specific weight of air
q	m/s, air speed
g	9.81 m/s2, gravity acceleration
Pd	mm C.A., dynamic pressure

Measuring total pressure

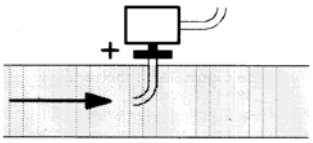

Pressure probes connection Siemens QBE 2...P... to burner's terminal block

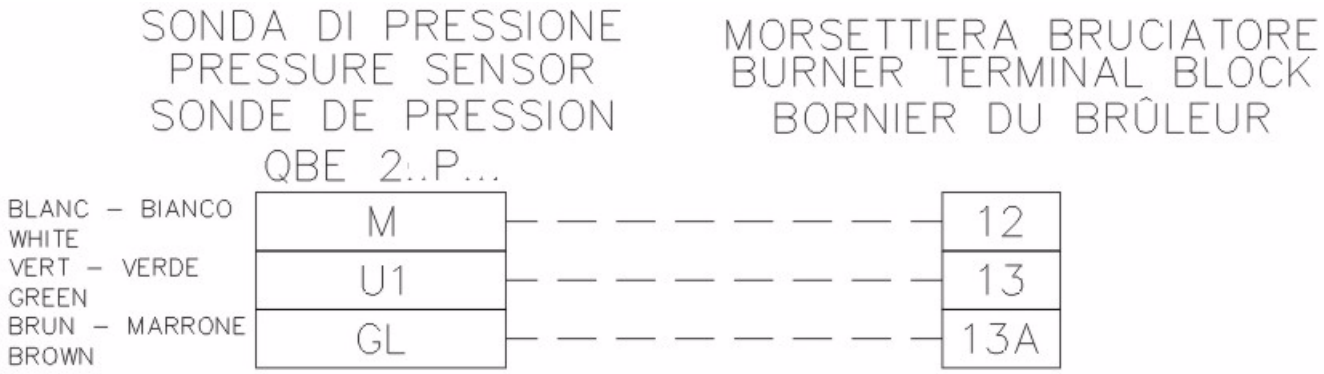

Spare parts

Description	Code
Modulator RWF40.000	2570112
Adapting frame Siemens ARG40 from RWF32.. to RWF40..	2570113
Temperature probe Siemens QAE2120.010A (30÷130°C)	2560101
Temperature probe Siemens QAM2120.040 (-15÷+50°C)	2560135
Thermoresistor Pt1000 ø = 6mm L = 100mm (30÷130°C)	2560188
Thermoresistor Pt1000 ø = 10mm L = 200mm (0÷350°C)	2560103
Pressure probe Siemens QBE2.. P4 (0÷4bar)	2560159
Pressure probe Siemens QBE2.. P10 (0÷10bar / signal 0÷10V)	2560160
Pressure probe Siemens QBE2.. P16 (0÷16bar / signal 0÷10V)	2560167
Pressure probe Siemens QBE2.. P25 (0÷25bar/ signal 0÷10V)	2560161
Pressure probe Siemens QBE2.. P40 (0÷40bar / signal 0÷10V)	2560162
Pressure probe Danfoss MBS3200 p 1,6 (0÷1,6bar / segnale 4÷20mA)	2560189
Pressure probe Danfoss MBS3200 p 10 (0÷10bar / segnale 4÷20mA)	2560190
Pressure probe Danfoss MBS3200 p 16 (0÷16bar / segnale 4÷20mA)	2560191
Pressure probe Danfoss MBS3200 p 25 (0÷25bar / segnale 4÷20mA)	2560192
Pressure probe Danfoss MBS3200 p 40 (0÷40bar / segnale 4÷20mA)	2560193
Pressure probe Siemens 7MF1564-3BB00-1AA1 (0÷1,6bar / segnale 4÷20mA)	25601A3
Pressure probe Siemens 7MF1564-3CA00-1AA1 (0÷10bar / segnale 4÷20mA)	25601A4
Pressure probe Siemens 7MF1564-3CB00-1AA1 (0÷16bar / segnale 4÷20mA)	25601A5
Pressure probe Siemens 7MF1564-3CD00-1AA1 (0÷25bar / segnale 4÷20mA)	25601A6
Pressure probe Siemens 7MF1564-3CE00-1AA1 (0÷40bar / segnale 4÷20mA)	25601A7
Thermocoupling type K ø = 10mm L = 200mm (0÷1200°C)	2560142
Thermoresistor Pt100 ø = 10mm L = 200mm (0÷350°C)	2560145

RWF50.2x & RWF50.3x

User manual

M12922CB Rel.1.0 07/2012

DEVICE INSTALLATION

Install the device using the relevant tools as shown in the figure.
To wire the device and sensors, follow the instructions on the burner wiring diagram.

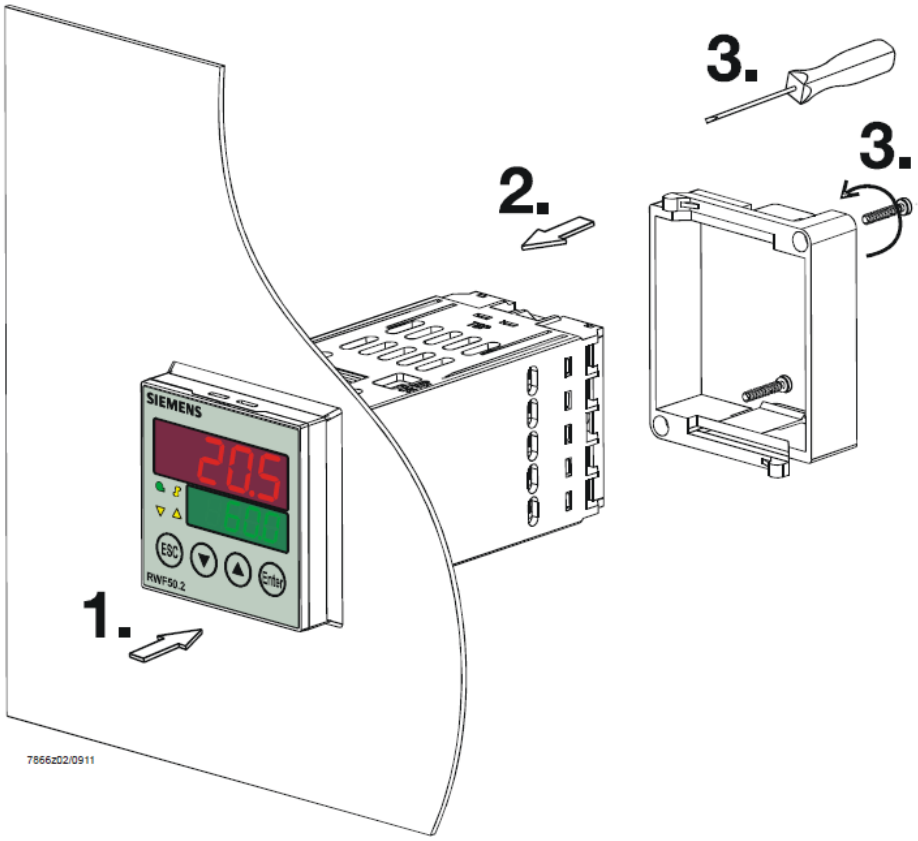

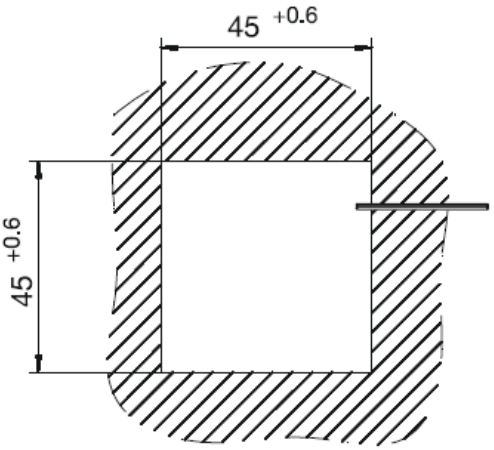

FRONT PANEL

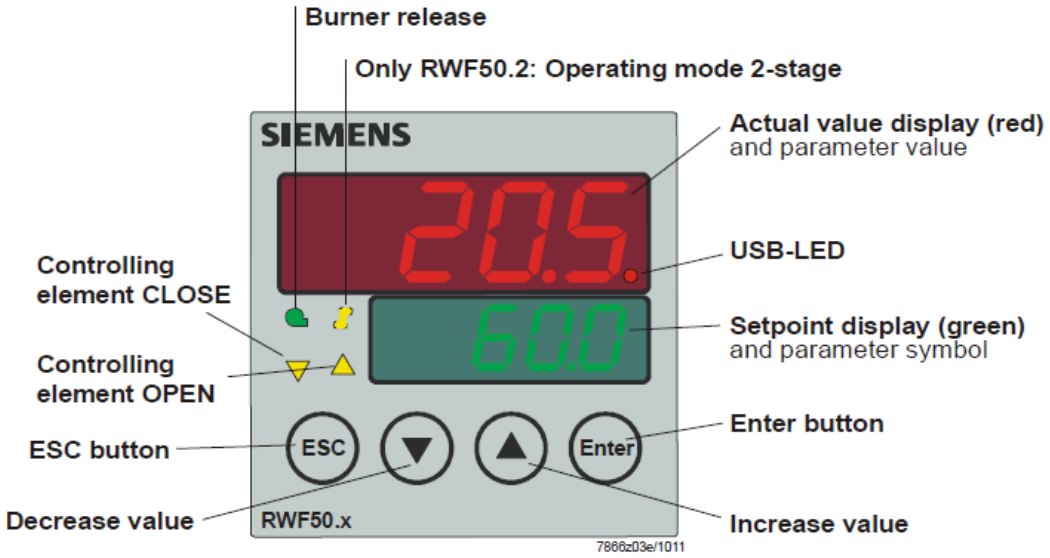

NAVIGATION MENU

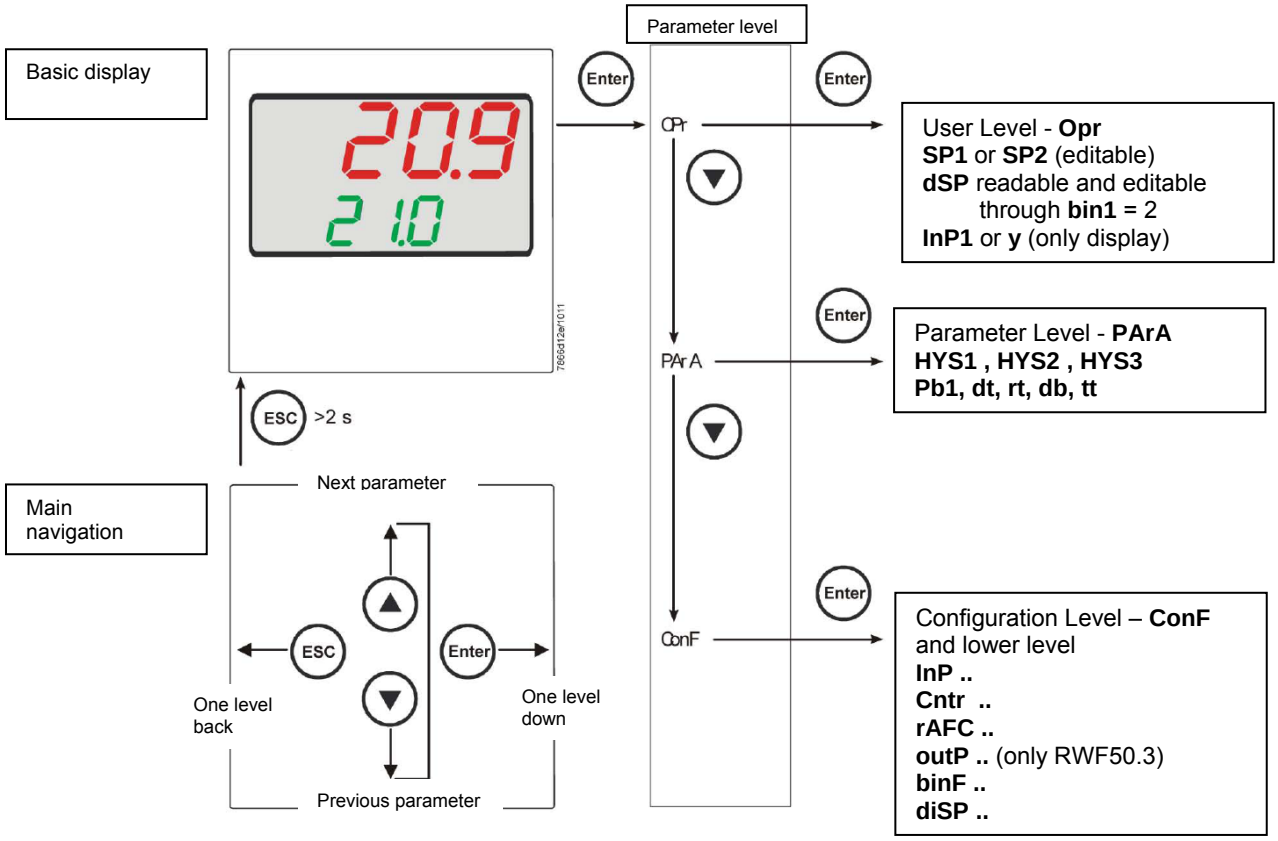

RWF5 is preset good for 90% of applications. However, you can set or edit parameters as follow:

Set-point: set or modification:
When the burner is in stand-by, (safety loop open, that is terminals 3-4/T1-T2 on the 7 pole plug open) push the **Enter** button: on the lower display (green) **Opr** appears; push **Enter** again and in the same display **SP1** appears. Push **Enter** again and the lower display (green **SP1**) flashes. Using the **up and down arrows** change the set-point on the upper display (red).Push **Enter** to confirm and push **ESC** more times to get the home position.

PID parameters set and modifications (see table below):

- Push **Enter** button, on the green display **Opr** appears; using the **down arrow,** scroll until group **PArA** is reached and push **Enter**.
- on the green display **Pb1** e appears and on the red one the set parameter.
- Push is sequence the **down or up** arrow the menu is scrolled.
- Push **Enter** to select and the **arrows** to choose the desired value. **Enter** to confirm.

Parameter	Display	Range	Factory setting	Remarks
Proportional band	PB.1	1… 9999 digit	10	Typical value for temperature
Derivative action	dt	0… 9999 sec.	80	Typical value for temperature
Integral action	rt	0… 9999 sec.	350	Typical value for temperature
Dead band (*)	db	0… 999,9 digit	1	Typical value
Servocontrol running time	tt	10… 3000 sec.	15	Set servocontrol running time
Switch-on differential (*)	HYS1	0,0… -1999 digit	-5	Value under setpoint below which the burner switches back on (1N-1P closes)
Switch-off differential 2° stage (*)	HYS2	0,0 … HYS3	3	(enable only with parameter **bin1** = 4)
Upper switch-off differential (*)	HYS3	0,0… 9999 digit	5	Value over setpoint above which the burner switches off (1N-1P opens)
Switch-on differential on cooling controller (*)	HYS4	0,0… 9999 digit	5	Do not used (enable only with parameter **CACt** = 0)
Switch-off differential 2° stage on cooling controller (*)	HYS5	HYS6…0,0 digit	5	Do not used (enable only with parameters **CACt** = 0 and **bin1** = 4)
Upper switch-off differential on cooling controller (*)	HYS6	0,0… -1999 digit	5	Do not used (enable only with parameter **CACt** = 0)
Delay modulation	q	0,0… 999,9 digit	0	Do not alter

(*)Parameters affected by setting of decimal place (**ConF > dISP** parameter **dECP**)

Setting the kind of sensor to be connected to the device:

- push the **Enter** button: on the lower display (green) **Opr** appears. Using the **up and down arrows** find **ConF.** Push **Enter** to confirm.
- Now on the green display the group **InP** appears. Push **Enter** and **InP1** is displaied. Enter to confirm.
- You are inside **InP1**; the green display shows **Sen1 (sensor type)**, while the red display shows the chosen sensor code
- Push **Enter** to enter the **Sen1** parameter, then choose the desired sensor using the **arrows.** Push **Enter** to confirm and **ESC** to escape.
- Once selected the sensor, you can modify all the other parameters using **up and down arrows** according to the tables here below.

ConF > InP >InP1

Parameter	Value	Description
SEn1 type of sensor for analog input 1	**1**	**Pt100 3 fili**
	2	Pt100 2 fili
	3	Pt1000 3 fili
	4	Pt1000 2 fili
	5	Ni1000 3 fili
	6	Ni1000 2 fili
	7	0 ÷ 135 ohm
	15	0 ÷ 20mA
	16	4 ÷ 20mA
	17	0 ÷ 10V
	18	0 ÷ 5V
	19	1 ÷ 5V
OFF1 sensor offset	-1999..**0**.. +9999	Using the measured value correction (offset), a measured value can be corrected to a certain degree, either up or down
SCL1 scale low level	-1999..**0**.. +9999	In the case of a measuring transducer with standard signal, the physical signal is assigned a display value here (for input ohm, mA, V)
SCH1 scale high level	-1999..**100**.. +9999	In the case of a measuring transducer with standard signal, the physical signal is assigned a display value here (for input ohm, mA, V)
dF1 digital filter	0…**0,6**…100	Is used to adapt the digital 2nd order input filter (time in s; 0 s = filter off)
Unit temperature unit	**1** 2	**1 = degrees Celsius** 2 = degrees Fahrenheit

(**bold** = factory settings)

Remark:
RWF50.2 e RWF50.3 cannot be connected to thermocouples.
If thermocouples have to be connected, convert the signal to a 4-20 mA one and set the RWF accordingly.

ConF > Cntr

Parameter	Value	Description
CtYP controller type	**1** 2	**1 = 3-position controller (open-stop-close only RWF50.2)** 2 = continuative action controller (only RWF50.3)
CACt control action	**1** 0	**1 = heating controller** 0 = cooling controller
SPL least value of the set-point range	-1999..**0**..+9999	set-point limitation prevents entry of values outside the defined range
SPH maximum value of the set-point range	-1999..**100**..+9999	set-point limitation prevents entry of values outside the defined range
oLLo set-point limitation start, operation limit low	**-1999**.... +9999	lower working range limit
oLHi set-point limitation end, operation limit high	-1999.... **+9999**	upper working range limit

(**bold** = factory settings)

ConF > rAFC

Activation boiler shock termic protetion:
RWF50.. can activate the thermal shock protection only on sites where the set-point is lower than 250°C and according to **rAL** parameter.

Parameter	Value	Description
FnCT function	**0** 1 2	Choose type of range degrees/time **0 = deactivated** 1 = Kelvin degrees/minute 2 = Kelvin degrees/hour
rASL ramp rate	**0,0 …** 999,9	Slope of thermal shock protection (only with functions 1 and 2)
toLP tolerance band ramp	**0**…9999	width of tolerance band (in K) about the set-point **0 = tolerance band inactive** 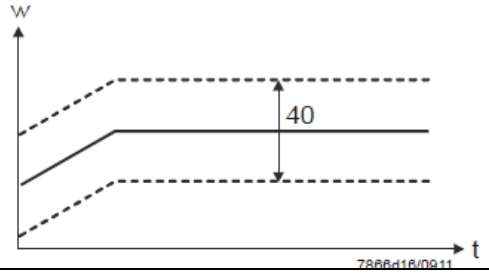
rAL ramp limit	**0**…250	Ramp limit. When this value is lower than the temperature set-point, the RWF controls the output increasing the temp set point step by step according to rASL. If this is over the temp set point, the control is performed in cooling.

(**bold** = factory settings)

ConF > OutP (parameter under group only for RWF50.3)

Parameter	Value	Description
FnCt tipo di controllo	 1 **4**	1 = analog input 1 doubling with possibility to convert (depending on par **SiGn**) **4 = modulation controller**
SiGn type of output signal	 **0** 1 2	physical output signal (terminals A+, A-) **0 = 0÷20mA** 1 = 4÷20mA 2 = 0÷10V
rOut Value when out of input range	 **0**…101	 signal (in percent) when measurement range is crossed
oPnt zero point	 -1999…**0**..+9999	value range of the output variable is assigned to a physical output signal Per default, the setting corresponds to 0...100% angular positioning for the controller outputs (terminals A+, A-) (effective only with **FnCt** = 1)
End End value	 -1999…**100**..+9999	value range of the output variable is assigned to a physical output signal Per default, the setting corresponds to 0...100% angular positioning for the controller outputs (terminals A+, A-) (effective only with **FnCt** = 1)

(**bold** = factory settings)

ConF > binF

Parameter	Value	Description
bin1 digital inputs (terminals DG - D1)	 **0** 1 2 4	**0 = without function** 1 = set-point changeover (SP1 / SP2) 2 = set-point shift (**Opr** > **dSP** parameter = value of set-point modify) 4 = changeover of operating mode open – modulating operation; close – 2 stage operation.

(**bold** = factory settings)

ConF > dISP

Parameter	Value	Description
diSU upper display (red)	 0 **1** 4 6 7	display value for upper display: 0 = display power-off **1 = analog input value** 4 = Controller's angular positioning 6 = set-point value 7 = end value with thermal shock protection
diSL lower display (green)	 0 1 4 **6** 7	display value for lower display: 0 = display power-off 1 = analog input value 4 = Controller's angular positioning **6 = set-point value** 7 = end value with thermal shock protection
tout timeout	 0..**180**..250	time (s) on completion of which the controller returns automatically to the basic display, if no button is pressed
dECP decimal point	**0** 1 2	**0 = no decimal place** 1 = one decimal place 2 = two decimal places
CodE level lockout	**0** 1 2 3	**0 = no lockout** 1 = configuration level lockout (ConF) 2 = Parameter and configuration level lockout (PArA & ConF) 3 = keyboard lockout

(**bold** = factory settings)

Manual control :

- in order to manual change the burner load, while firing keep pushing the **ESC** button for more than 5 s; on the lower green display **Hand** appears.
- using the **UP** and **DOWN** arrows, the load varies.
- Keep pushing the **ESC** button for getting the normal operation again.
- **NB:** every ime the device shuts the burner down (start led switched off - contact 1N-1P open), the manual control is not active.

Device self-setting (auto-tuning):

If the burner in the steady state does not respond properly to heat generator requests, you can activate the Device's self-setting function, which recalculates PID values for its operation, deciding which are most suitable for the specific kind of request

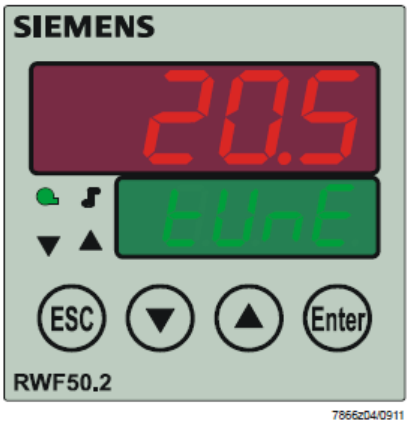

Follow the below instructions:
push the **UP** and **DOWN** arrows for more than 5 s; on the green lower display **TUNE** appears. Now the device pushes the burner to increase and decrease its output. During this time, the device calculates PID parameters (**Pb1, dt** and **rt**). After the calculations, the TUNE is automatically deactivated and the device has already stored them.
In order to stop the Auto-tuning function while it works, push again the **UP** and **DOWN** arrows for more than 5 s. The calculated PID parameters can be manually modified following the previously described instructions.

Display of software version :

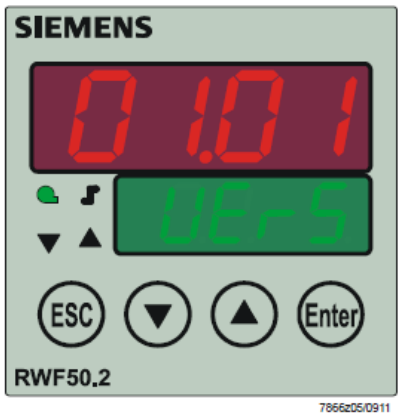

The software version is shown by pushing **Enter + UP arrow** on the upper display

Electric connection :

With 7 pins connector version

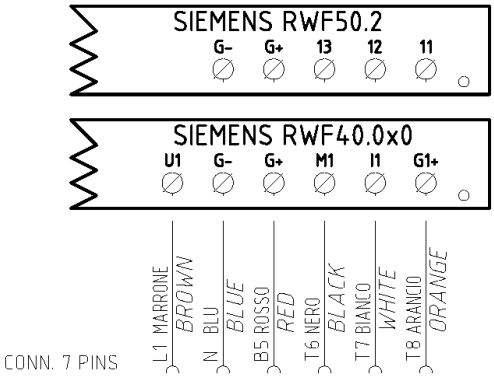

With terminals version

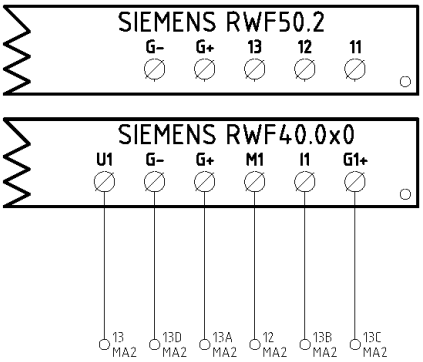

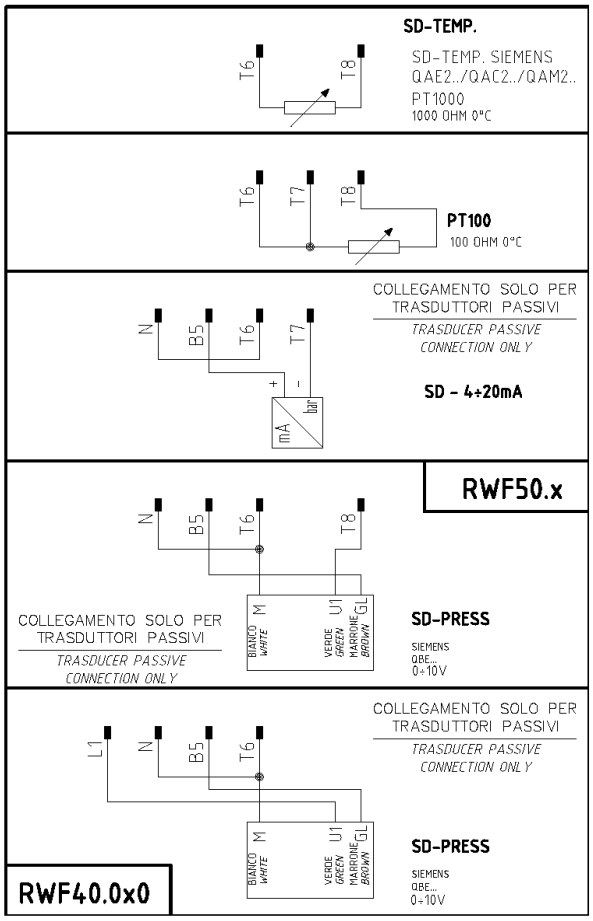

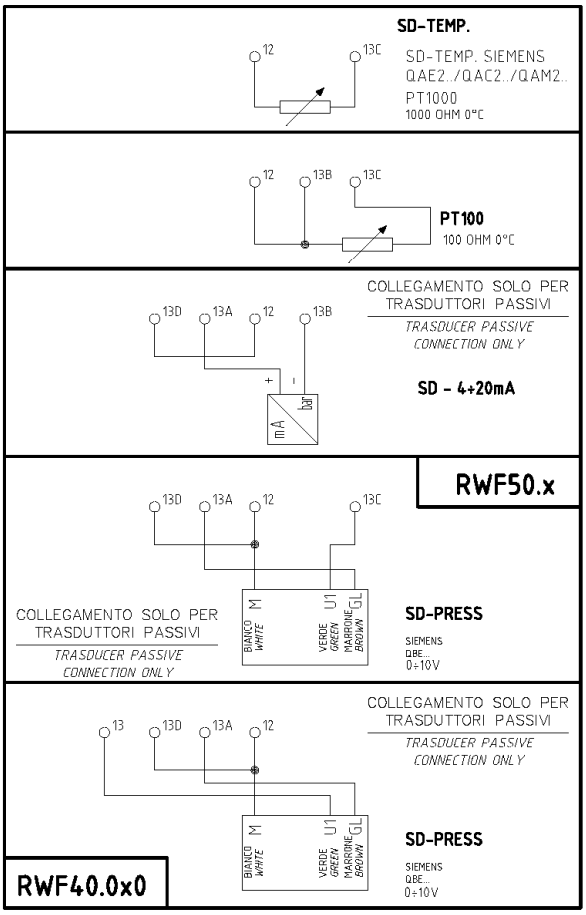

Matches terminals between RWF50.2 and RWF40.0x0

Parameters summarising for RWF50.2x:

Navigation menù / Types of probe	Conf					Conf			PArA						Opr
	Inp					Cntr		diSP							
	Inp1														
	SEn1	OFF1	SCL1	SCH1	Unit	SPL	SPH	dECP	Pb. 1	dt	rt	tt	HYS1 (*)	HYS3 (*)	SP1 (*)
Siemens QAE2120…	6	0	needless	needless	1	30	95	1	10	80	350	(#)	-5	5	80 °C
Siemens QAM2120..	6	0	needless	needless	1	0	80	1	10	80	350	(#)	-2,5	2,5	40°C
Pt1000 (130°C max.)	4	0	needless	needless	1	30	95	1	10	80	350	(#)	-5	5	80°C
Pt1000 (350°C max.)	4	0	needless	needless	1	0	350	1	10	80	350	(#)	-5	10	80°C
Pt100 (130°C max.)	1	0	needless	needless	1	0	95	1	10	80	350	(#)	-5	5	80°C
Pt100 (350°C max)	1	0	needless	needless	1	0	350	1	10	80	350	(#)	-5	10	80°C
Probe 4÷20mA / 0÷1,6bar	16	0	0	160	needless	0	160	0	5	20	80	(#)	0	20	100 kPa
Probe 4÷20mA / 0÷3bar	16	0	0	300	needless	0	300	0	5	20	80	(#)	0	20	200 kPa
Probe 4÷20mA / 0÷10bar	16	0	0	1000	needless	0	1000	0	5	20	80	(#)	0	50	600 kPa
Probe 4÷20mA / 0÷16bar	16	0	0	1600	needless	0	1600	0	5	20	80	(#)	0	80	600 kPa
Probe 4÷20mA / 0÷25bar	16	0	0	2500	needless	0	2500	0	5	20	80	(#)	0	125	600 kPa
Probe 4÷20mA / 0÷40bar	16	0	0	4000	needless	0	4000	0	5	20	80	(#)	0	200	600 kPa
Siemens QBE2002 P4	17	0	0	400	needless	0	400	0	5	20	80	(#)	0	20	200 kPa
Siemens QBE2002 P10	17	0	0	1000	needless	0	1000	0	5	20	80	(#)	0	50	600 kPa
Siemens QBE2002 P16	17	0	0	1600	needless	0	1600	0	5	20	80	(#)	0	80	600 kPa
Siemens QBE2002 P25	17	0	0	2500	needless	0	2500	0	5	20	80	(#)	0	125	600 kPa
Siemens QBE2002 P40	17	0	0	4000	needless	0	4000	0	5	20	80	(#)	0	200	600 kPa
Segnale 0÷10V	17	0	to be fixed	to be fixed	needless	to be fixed	to be fixed	to be fixed	5	20	80	(#)	to be fixed	to be fixed	to be fixed
Segnale 4÷20mA	16	0	to be fixed	to be fixed	needless	to be fixed	to be fixed	to be fixed	5	20	80	(#)	to be fixed	to be fixed	to be fixed

NOTE :
(#) tt – servo control run time
SQL33 ; STM30; SQM10; SQM40; SQM50; SQM54 = **30** (secondi) - STA12B3.41; SQN30.251; SQN72.4A4A20 = **12** (secondi)
(*)These values are factory set - values **must be** set during operation at the plant based on the real working temperature/pressure value.
WARNING : With pressure probes the parameters SP1, SCH, SCL, HYS1, HYS3 must be selected, and visualized in kPa (kilo Pascal). (1bar = 100.000Pa = 100kPa)

APPENDIX: PROBES CONNECTION

To assure the utmost comfort, the control system needs reliable information, which can be obtained provided the sensors have been installed correctly. Sensors measure and transmit all variations encountered at their location.

Measurement is taken based on design features (time constant) and according to specific operating conditions.With wiring run in raceways, the sheath (or pipe) containing the wires must be plugged at the sensor's terminal board so that currents of air cannot affect the sensor's measurements.

Ambient probes (or ambient thermostats)

Installation

The sensors (or room thermostats) must be located in

reference rooms in a position where they can take real temperature measurements without being affected by

foreign factors.

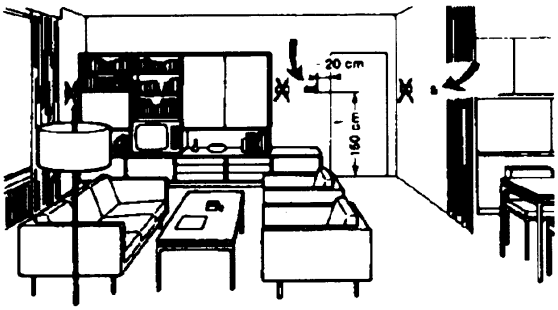

Outside probes (weather)

Installation

In heating or air-conditioning systems featuring adjustment in response to outside temperature, the sensor's positioning is of paramount importance.

It's good to be admired …even better to be effective

Heating systems: the room sensor must not be installed in rooms with heating units complete with thermostatic valves. Avoid all sources of heat foreign to the system.

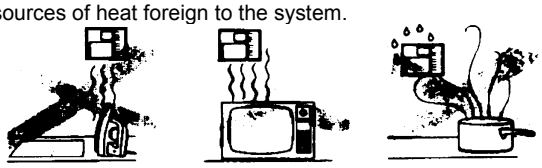

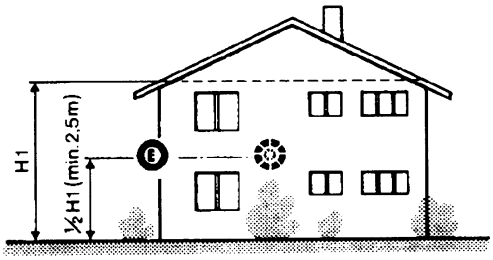

General rule: on the outer wall of the building where the living rooms are, never on the south-facing wall or in a position where they will be affected by morning sun. If in any doubt, place them on the north or north-east façade.

Location

On an inner wall on the other side of the room to heating unitsheight above floor 1.5 m, at least 1.5 m away from external sources of heat (or cold).

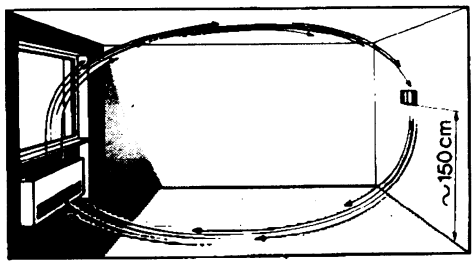

Positions to be avoided

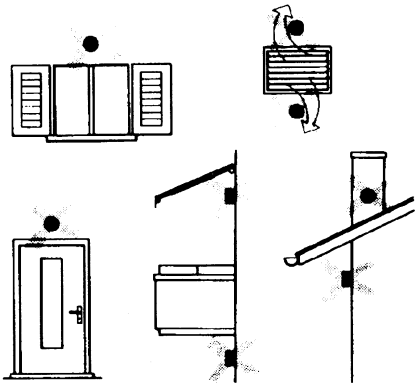

Installation position to be avoided

near shelving or alcoves and recesses, near doors or win-dows, inside outer walls exposed to solar radiation or currents of cold air, on inner walls with heating system pipes, domestic hot water pipes, or cooling system pipes running through them.

Avoid installing near windows, vents, outside the boiler room, on chimney breasts or where they are protected by balconies, cantilever roofs.

The sensor must not be painted (measurement error).

Duct or pipe sensors

Installing temperature sensors

For measuring outlet air:

- after delivery fan or
- after coil to be controlled, at a distance of at least 0,5 m

For measuring room temperature:

- before return air intake fan and near room's return airintake. For measuring saturation temperature: after mist eliminator.

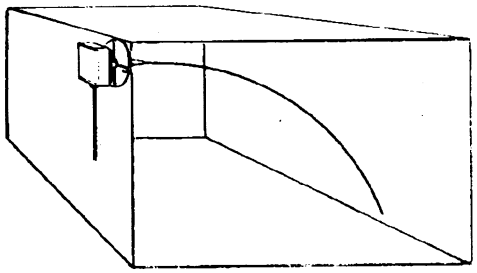

Bend 0.4m sensor by hand (never use tools) as illustrated.

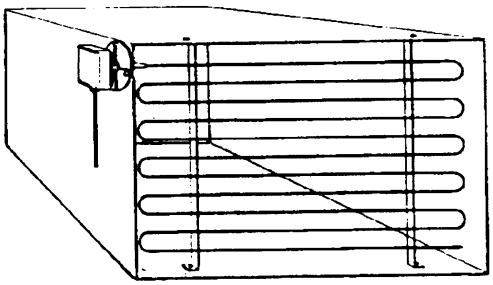

Use whole cross-section of duct, min. distance from walls 50 mm, radius of curvature 10 mm for 2m or 6m sensors.

Installing combined humidity sensors

As max. humidity limit sensor on outlet (steam humidifiers).

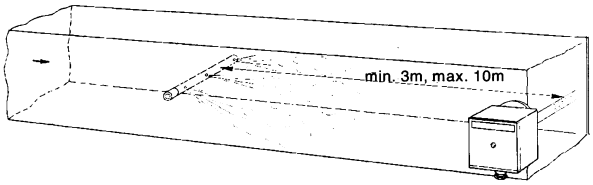

Installing pressure sensors

A - installation on ducts carrying fluids at max. temperature 80°C

B - installation on ducts at temperature over 80°C and for refrigerants

C - installation on ducts at high temperatures:

- increase length of siphon
- place sensor at side to prevent it being hit by hot air coming from the pipe.

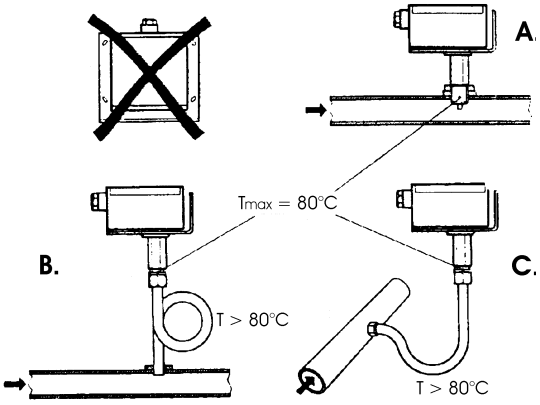

Installing differential pressure sensors for water

- Installation with casing facing down not allowed.-With temperature over 80°C, siphons are needed.
- To avoid damaging the sensor, you must comply with the following instructions

when installing:

- make sure pressure difference is not greater than thevalue permitted by the sensor
- when there are high static pressures, make sure you insert shutoff valves A-B-C.

Putting into operation

Start disable

1=open C1=open C

2=open A2=close B

3=open B3=close A

4= close C

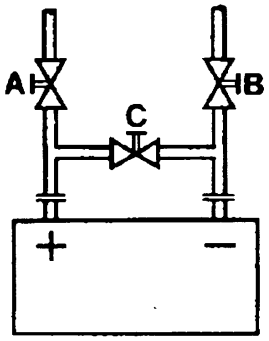

Immersion or strap-on sensors

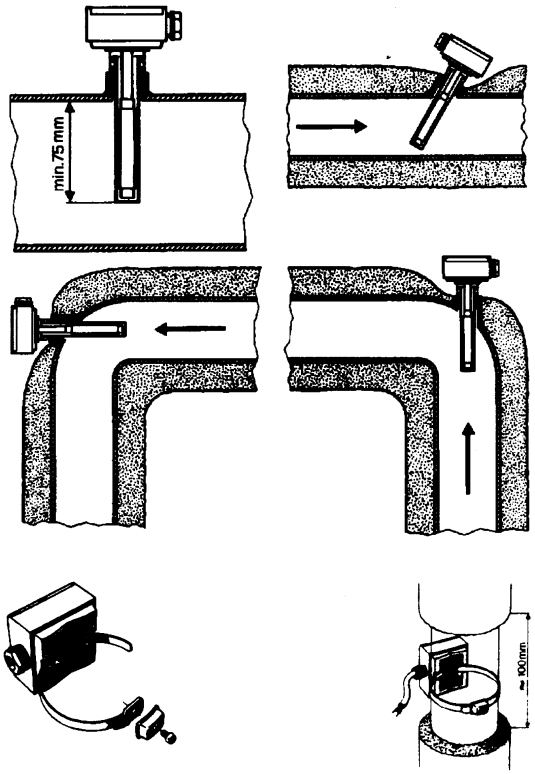

Placing the probes (QAD22.../QAE21.../QAP21.../RCA...)

With pumps on outlet

with 3 ways valves / with 4 ways valves

Panel system / burner control

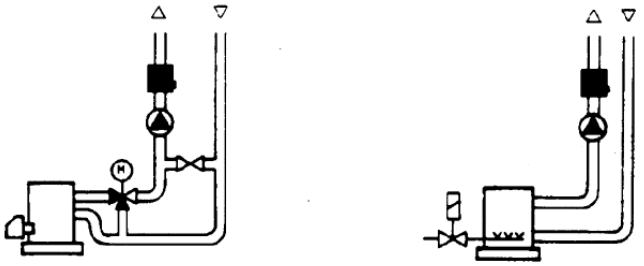

With pumps on return

with 3 ways valves / with 4 ways valves

Immersion probes installation

Sensors must be installed on the stretch of pipe in which fluid circulates all the time.

The rigid stem (sensing element doing the measuring) must be inserted by at least 75mm and must face the direction of flow.

Recommended locations: on a bend or on a straight stretch of pipe but tilted by 45° and against the flow of fluid.

Protect them to prevent water from infiltrating (dripping gates, condensation from pipes etc.)

Installing QAD2.. strap-on sensors

Make sure fluid is circulating in the chosen location.

Eliminate insulation and paintwork (including rust inhibitor) on a min. 100mm length of pipe.

Sensors come with straps for pipes up to 100 mm in diameter

Strap-on or immersion sensors?

QAD2.. strap-on sensors

Advantages :

- 10 sec. time constant
- Installed with system running (no plumbing work)
- Installation can be changed easily if it proves incorrect.

Limits:

- Suitable for pipe diameters max. 100 mm
- Can be affected by currents of air etc.

QAE2... immersion sensors

Advantages:

- Measure "mean" fluid temperature
- No external influence on measurement such as: currents of air, nearby pipes etc.

Limits:

- Time constant with sheath: 20 sec.
- Hard to change installation position if it proves incorrect.

Installing differential pressure probes for air

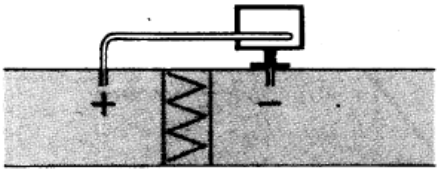

A - Control a filter (clogging)

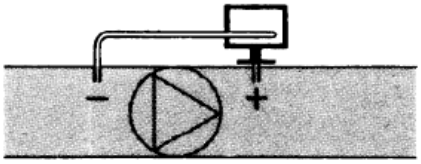

B - Control a fan (upstream/downstream)

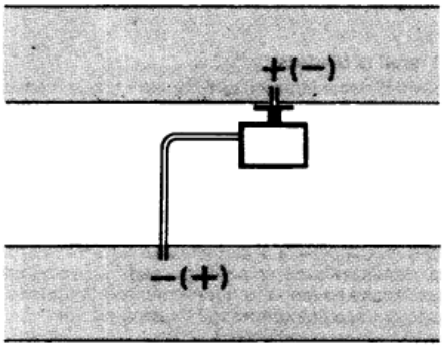

C - Measurement of difference in pressure between two ducts

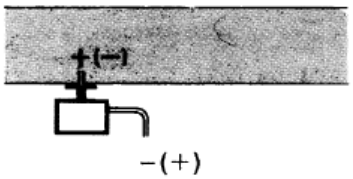

D - Measurement of difference in pressure between two rooms or of inside of duct and outside

Basic principles

Measuring static pressure(i.e. pressure exerted by air on pipe walls)

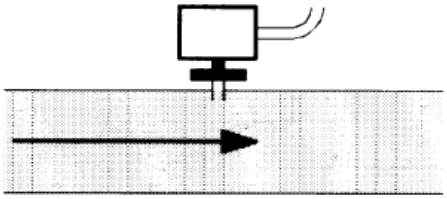

Measuring dinamic pressure

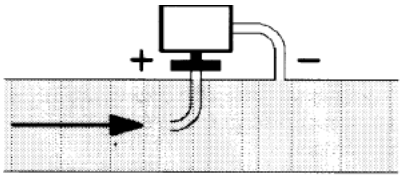

$$Pd = \frac{y\,\vartheta^2}{2g}$$

Key

y	Kg/m^3, specific weight of air
□	m/s, air speed
g	9.81 m/s^2 gravity acceleration
Pd	mm C.A., dynamic pressure

Measuring total pressure

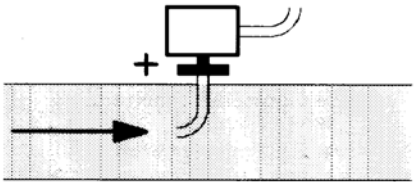

Spare parts

Description	Code
Modulator RWF50.2 (uscita a 3 punti - apri, fermo, chiudi)	2570148
Modulator RWF50.3 (uscita continua 0÷20mA, 4÷20mA, 0÷10V)	2570149
Temperature probe Siemens QAE2120.010A (30÷130°C)	2560101
Temperature probe Siemens QAM2120.040 (-15÷+50°C)	2560135
Thermoresistor Pt1000 ø6mm L100mm (30÷130°C)	2560188
Thermoresistor Pt1000 ø10mm L200mm (0÷350°C)	2560103
Thermoresistor Pt100 ø10mm L200mm (0÷350°C)	2560145
Thermoresistor Pt100 ø8mm L85mm (0÷120°C)	25601C3
Pressure probe Siemens QBE2.. P4 (0÷4bar)	2560159
Pressure probe Siemens QBE2.. P10 (0÷10bar / signal 0÷10V)	2560160
Pressure probe Siemens QBE2.. P16 (0÷16bar / signal 0÷10V)	2560167
Pressure probe Siemens QBE2.. P25 (0÷25bar / signal 0÷10V)	2560161
Pressure probe Siemens QBE2.. P40 (0÷40bar / signal 0÷10V)	2560162
Pressure probe Danfoss MBS 3200 P 1,6 (0÷1,6bar / signal 4÷20mA)	2560189
Pressure probe Danfoss MBS 3200 P 10 (0÷10bar / signal 4÷20mA)	2560190
Pressure probe Danfoss MBS 3200 P 16 (0÷16bar / signal 4÷20mA)	2560191
Pressure probe Danfoss MBS 3200 P 25 (0÷25bar / signal 4÷20mA)	2560192
Pressure probe Danfoss MBS 3200 P 40 (0÷40bar / signal 4÷20mA)	2560193
Pressure probe Siemens 7MF1565-3BB00-1AA1 (0÷1,6bar / signal 4÷20mA)	25601A3
Pressure probe Siemens 7MF1565-3CA00-1AA1 (0÷10bar / signal 4÷20mA)	25601A4
Sonda di pressione Siemens 7MF1565-3CB00-1AA1 (0÷16bar / signal	25601A5
Pressure probe Siemens 7MF1565-3CD00-1AA1 (0÷25bar / signal 4÷20mA)	25601A6
Pressure probe Siemens 7MF1565-3CE00-1AA1 (0÷40bar / signal 4÷20mA)	25601A7
Pressure probe Gefran E3E B1V6 MV (0÷1,6bar / segnale 4÷20mA)	25601C4
Pressure probe Danfoss E3E B01D MV (0÷10bar / segnale 4÷20mA)	25601C5
Pressure probe Danfoss E3E B16U MV (0÷16bar / segnale 4÷20mA)	25601C6
Pressure probe Danfoss E3E B25U MV (0÷25bar / segnale 4÷20mA)	25601C7
Pressure probe Danfoss E3E B04D MV (0÷40bar / segnale 4÷20mA))	25601C8

Note: Specifications and data subject to change. Errors and omissions excepted.

KM3 Modulator

USER MANUAL

M12927CA Rel.1.0 10/2020

MOUNTING

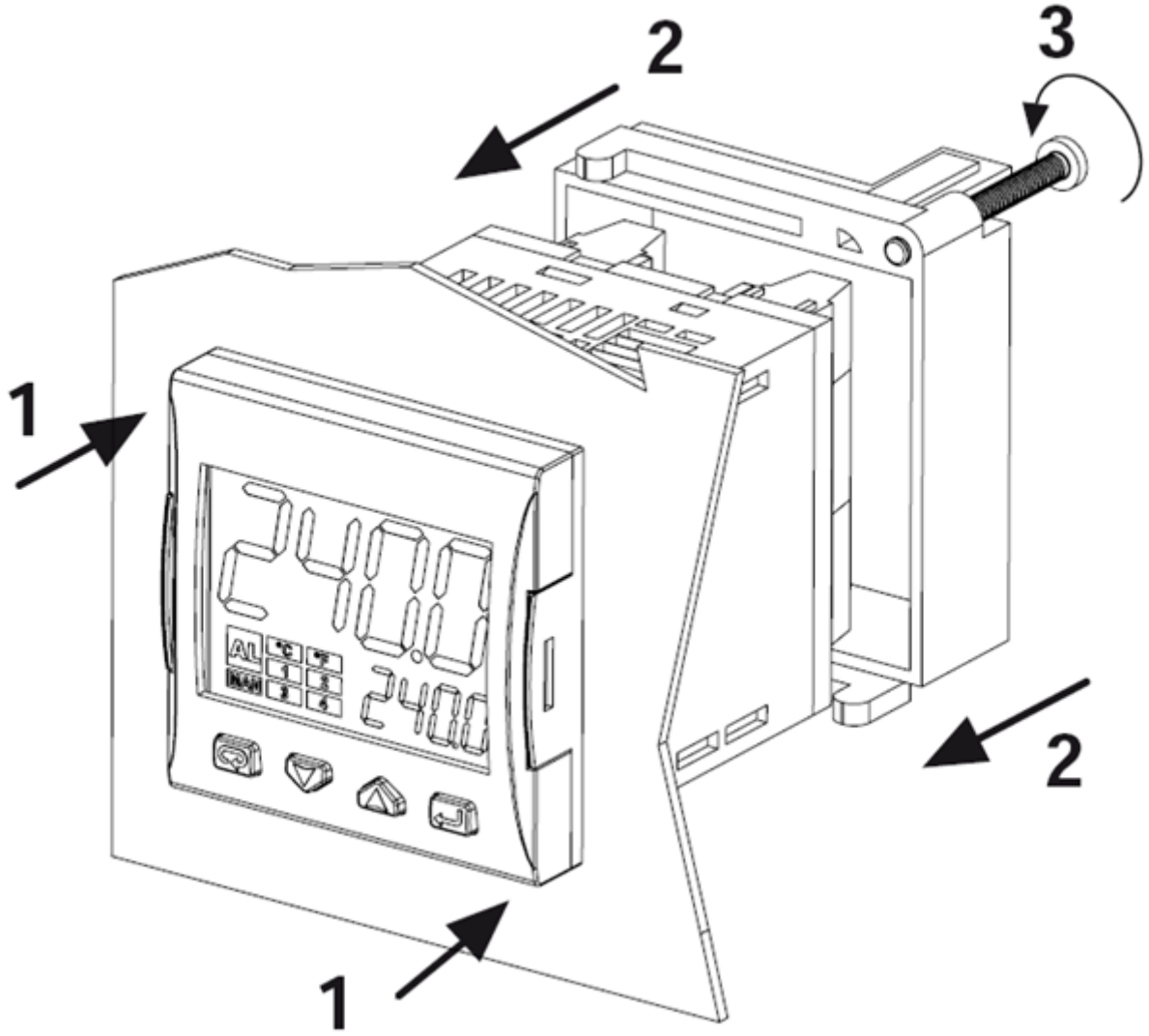

DISPLAY AND KEYS

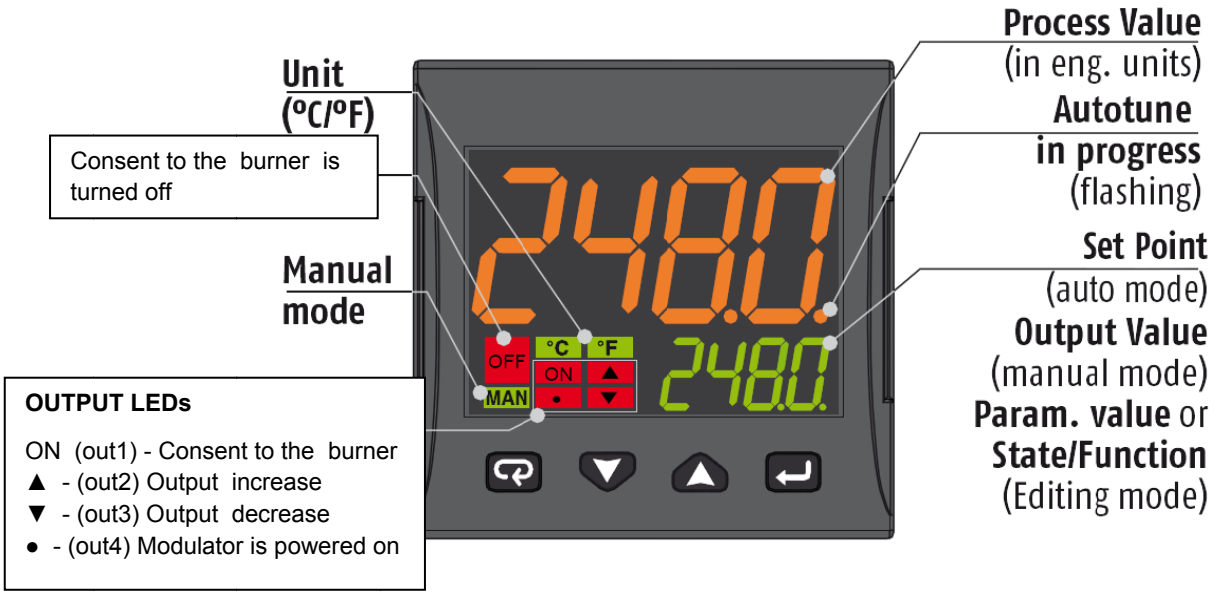

	Operator Mode	Editing Mode
	Access to: - Operator Commands (Timer, Setpoint selection ...) - Parameters - Configuration	Confirm and go to Next parameter
	Access to: - Operator additional information (Output value, running time ...)	Increase the displayed value or select the next element of the parameters list
	Access to: - Set Point	Decrease the displayed value or select the previous element
	Programmable key: Start the programmed function (Autotune, Auto/Man, Timer ...)	Exit from Operator commands/Parameter setting/Configuration

CONNECTIONS DIAGRAM

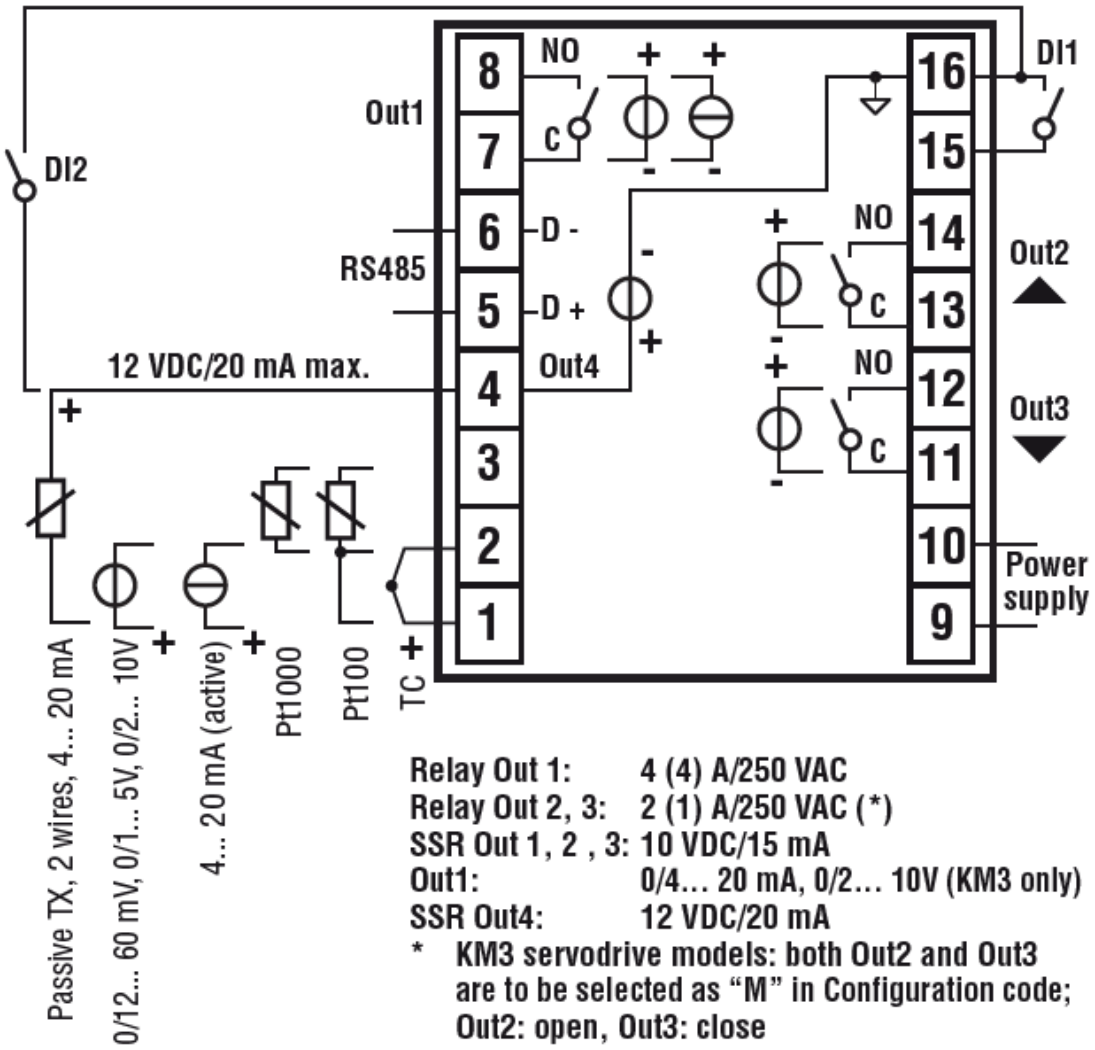

Probe connection:

- **PT1000/NTC/PTC**: between terminal 3 and 2
- **PT 100**: between terminal 3 and 2 with terminal 1
- **Passive pressure probe** 0/4-20 mA: between terminal 4 (+) e 1 (-)
  Note: out4 must be activated (IO4F must be setted to ON)
- **Powered pressure probe** 0/4-20 mA between terminal 4 (power supply), 2 (negative) e 1 (positive)
  Note: set IO4F to ON to activate Out4

Power supply connection:

- **Neutral wire:** terminal 9
- **Phase:** terminal 10 (100…240 Vac)
- Close terminals 15-16 to switch to the set point 2

Output connection:

- **Channel 1:** terminal 7 and 8 (burner on – off)
- **Channel 2:** terminal 11 and 12 (servomotor opens)
- **Channel 3:** terminal 13 and 14 (servomotor closes)

SETPOINT AND HYSTERESIS CONFIGURATION (SP, AL1, HAL1 parameters)

Push the ↵ button to enter into the setpoint configuration:

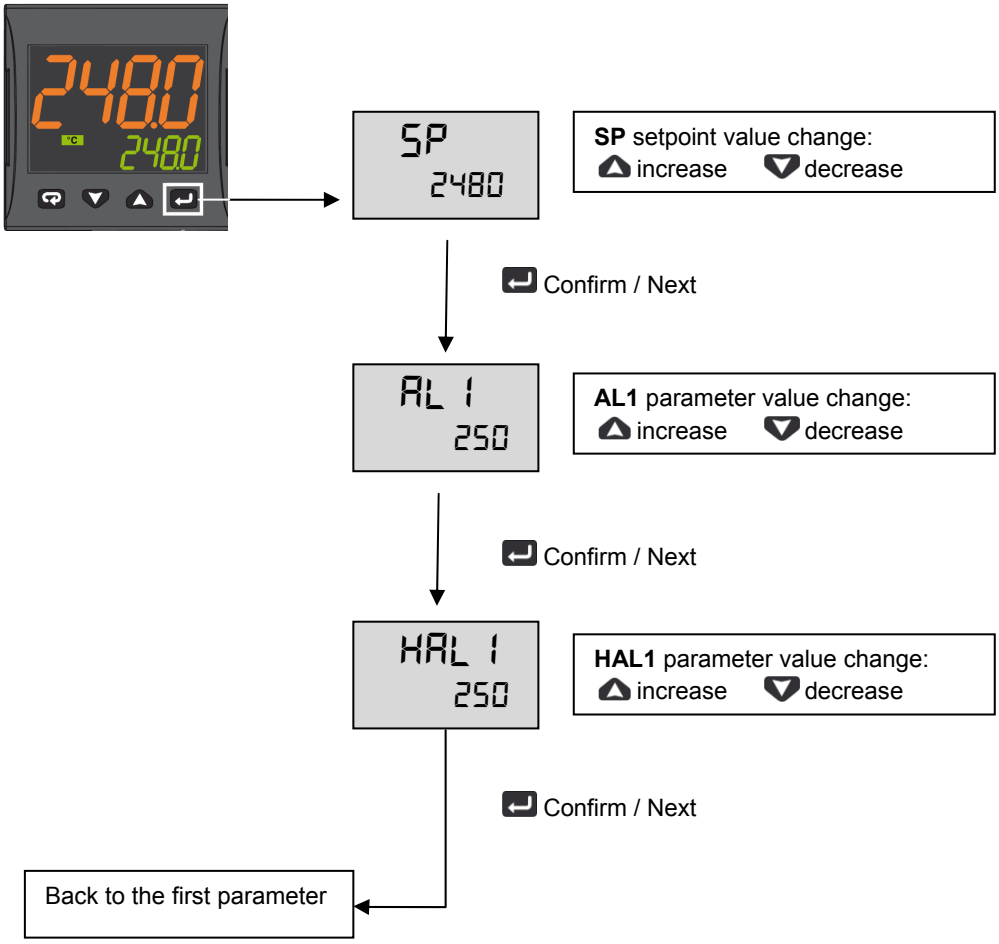

To return to normal mode, press the ↩ key for 3 seconds or wait the 10s timeout

Operation example

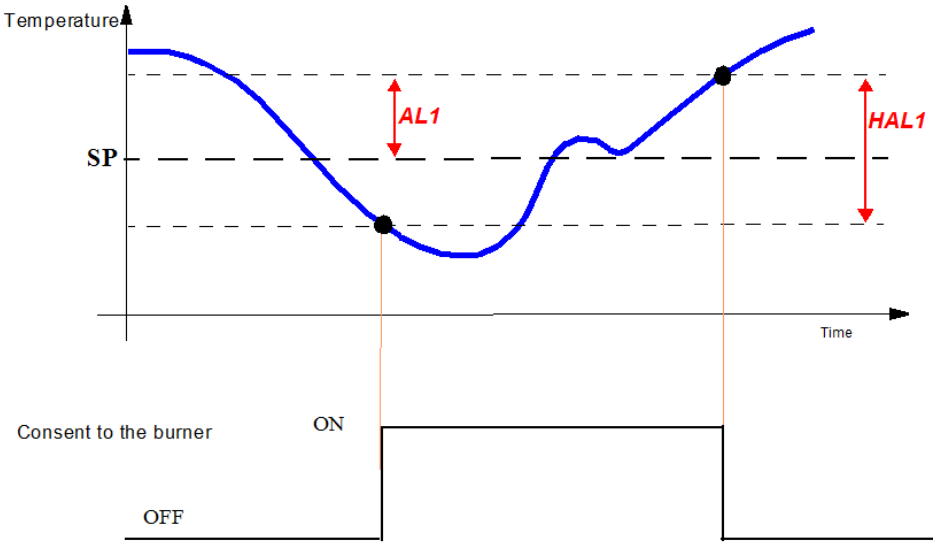

LIMITED ACCESS LEVEL

Proceed as follows to change some parameters that are not visible in standard user mode:

Press the ↵ key for 3 seconds

Password = 20

Access to parameter:

▲	Increase the displayed value
▼	Decrease the displayed value
↵	Confirm and go to next parameter

Param	Description	Values	Default
SEnS	Input type	Pt1 = RTD Pt100 Pt10 = RTD Pt1000 0.20 = 0..20mA 4.20 = 4..20mA Pressure probe 0.10 = 0..10V 2.10 = 2..10V crAL= Thermocouple K	Depends on the probe
SP	Set point 1	SPLL ... SPLH	See page 7
AL1	AL1 threshold	AL1L... AL1H (E.U.)	
HAL1	AL1 hysteresis	1... 9999 (E.U.)	
Pb	Proportional band	1... 9999 (E.U.)	
ti	Integral time	0 (oFF) ... 9999 (s)	
td	Derivative time	0 (oFF) ... 9999 (s)	
Str.t	Servomotor stroke time	5...1000 seconds	
db.S	Servomotor dead band	0...100%	
SPLL	Minimum set point value	-1999 ... SPHL	
SPHL	Maximum set point value	SPLL ... 9999	
dp	Decimal point position	0... 3	
SP 2	Set point 2	SPLL...SPLH	60
A.SP	Selection of the active set point	"SP" ... " nSP"	SP

To exit the parameter setting procedure press the ↩ key (for 3 s) or wait until the timeout expiration (about 30 seconds)

Probe parameters configuration MODULATORE ASCON KM3

Parameter Group	**inP**						**AL1**		**rEG**					**SP**		
Parameter	**Sens**	**dp**	**SSC**	**FSc**	**unit**	**IO4.F (**)**	**AL1 (***)**	**HAL1 (***)**	**Pb (***)**	**ti (***)**	**td (***)**	**Str.t**	**db.S**	**SPLL**	**SPHL**	**SP (***)**
Probes		Dec Point	Scale Min	Scale Max			Off	On	p	i	d	servo time s	Band Mo.	SP Min	SP Max	Set point
Pt1000 (130°C max)	Pt10	1			°C	on	5	10	10	350	1	*	5	30	95	80
Pt1000 (350°C max)	PT10	1			°C	on	10	10	10	350	1	*	5	0	350	80
Pt100 (130°C max)	PT1	1			°C	on	5	10	10	350	1	*	5	0	95	80
Pt100 (350°C max)	Pt1	1			°C	on	10	10	10	350	1	*	5	0	350	80
Pt100 (0÷100°C 4÷20mA)	4.20	1	0	100		on	5	10	10	350	1	*	5	0	95	80
Thermocouple K (1200°C max)	crAL	0			°C	on	20	25	10	350	1	*	5	0	1200	80
Thermocouple J (1000°C max)	J	0			°C	on	20	25	10	350	1	*	5	0	1000	80
4-20mA / 0-1,6barPressure probe	4.20	0	0	160		on	20	20	5	120	1	*	5	0	160	100
4-20mA / 0-10bar Pressure probe	4.20	0	0	1000		on	50	50	5	120	1	*	5	0	1000	600
4-20mA / 0-16bar Pressure probe	4.20	0	0	1600		on	80	80	5	120	1	*	5	0	1600	600
4-20mA / 0-25bar Pressure probe	4.20	0	0	2500		on	125	125	5	120	1	*	5	0	2500	600
4-20mA / 0-40bar Pressure probe	4.20	0	0	4000		on	200	200	5	120	1	*	5	0	4000	600
QBE2002 / 0-25bar Pressure probe	0.10	0	0	2500		0n	125	125	5	120	1	*	5	0	2500	600

Note:

(*) Str.t - Servomotor stroke time
SQL33; STM30; SQM10; SQM40; SQM50; SQM54 = 30 (Seconds)
STA12B3.41; SQN30.251; SQN72.4A4A20 = 12 (Seconds)

(**) Out 4 … on Display led °4 must be switched on, otherwise change the io4.F parameter value from "on" to "out4", confirm the value, quit the configuration mode then change again the io4.F parameter value from "out4" to "on".

(***) Factory settings. These values must be adapted to machine conditions

N.B. For pressure probe, SP, SPHL, SPLL parameters values are expressed in Kpa (1 bar = 100 Kpa).

CONFIGURATION

How to access configuration level

The configuration parameters are collected in various groups. Every group defines all parameters related with a specific function (e.g.: control, alarms, output functions).

1. Push the button for more than 5 seconds. The upper display will show PASS while the lower display will show 0.
2. Using and buttons set the programmed password.
   According to the entered password, it is possible to see a part of the parameters listed in the "configuration parameters" section.
   a. Enter "**30**" as password to view all the configuration parameters
   b. Enter "**20**" as password to view the parameters of the "limited access level". At this point, only the parameters with attribute **Liv = A** or **Liv = O** will be editable.
   c. Leave the password blank to edit "user level" parameters, that are identified by attribute **Liv = O**
3. Push the button. If the password is correct the display will show the acronym of the first parameter group preceded by the symbol: . In other words the upper display will show: inP (group of the **Input parameters**).

The instrument is in configuration mode. To press for more than 5 seconds, the instrument will return to the "standard display.

Keyboard functions during parameter changing:

	Operator Mode
	When the upper display is showing a group and the lower display is blank, this key allows to enter in the selected group. When the upper display is showing a parameter and the lower display is showing its value, this key allows to store the selected value for the current parameter and access the next parameter within the same group.
	Allows to increase the value of the selected parameter.
	Allows to decrease the value of the selected parameter.
	Short presses allow you to exit the current group of parameters and select a new group. A long press terminates the configuration procedure (the instrument returns to the normal display).
+	These two keys allow to return to the previous group. Proceed as follows: Push the button and maintaining the pressure, then push the ; release both the buttons.

Configuration Parameters

inP GROUP - input confiuration					
Liv	**N°**	**Param**	**Description**	**Values**	**Default**
A	1	SEnS	Input type	Pt1 = RTD Pt100 Pt10 = RTD Pt1000 0.20 = 0..20mA 4.20 = 4..20mA Pressure probe 0.10 = 0..10V 2.10 = 2..10V crAL= Thermocouple K	Depends on the probe
A	2	dp	Decimal point position	0... 3	See page 7
A	3	SSc	Initial scale read-out for linear inputs (avaiable only if SEnS parameter is not equal to Pt1, Pt10, crAL values)	-1999... 9999	0
C	4	FSc	Full scale read-out for linear input inputs (avaiable only if SEnS parameter is not equal to Pt1, Pt10, crAL values)	-1999... 9999	Depends on the probe
C	5	unit	Unit of measure (present only in the case of temperature probe)	°C/°F	°C
C	6	Fil	Digital filter on the measured value	0 (= OFF)... 20.0 s	1.0
C	7	inE	Selection of the Sensor Out of Range type that will enable the safety output value	or = Over range ou = Under range our = over e under range	or

C	8	oPE	Safety output value	-100... 100	0
C	9	io4.F	I/O4 function selection	on = Out4 will be ever ON (used as a transmitter power supply) ,out4 = Uscita 4 (Used as digital output 4), dG2c = Digital input 2 for contact closure, dG2U = Digital input 2 driven by 12... 24 VDC	on
C	10	diF1	Digital input 1 function	oFF = Not used, 1 = Alarm reset, 2 = Alarm acknowledge (ACK), 3 = Hold of the measured value, 4 = Stand by mode, 5 = Manual mode, 6 = HEAt with SP1 and CooL with SP2, 7 = Timer RUN/Hold/Reset, 8 = Timer Run, 9 = Timer Reset, 10 = Timer Run/Hold, 11 = Timer Run/Reset, 12 = Timer Run/Reset with lock, 13 = Program Start, 14 = Program Reset, 15 = Program Hold, 16 = Program Run/Hold, 17 = Program Run/Reset, 18 = Sequential SP selection, 19 = SP1 - SP2 selection, 20 = SP1... SP4 binary selection, 21 = Digital inputs in parallel	19
C	12	di.A	Digital Inputs Action (DI2 only if configured)	0 = DI1 direct action, DI2 direct action 1 = DI1 reverse action, DI2 direct action 2 = DI1 direct action, DI2 reverse action 3 = DI1 reverse action, DI2 reverse action	0

Out GROUP- Output parameters					
Liv	**N°**	**Param**	**Description**	**Values**	**Default**
C	14	o1F	Out 1 function	AL = Alarm output	AL
C	15	o1AL	Initial scale value of the analog retransmission	-1999 ... Ao1H	1
C	18	o1Ac	Out 1 action	dir = Direct action rEU = Reverse action dir.r = Direct with reversed LED ReU.r = Reverse with reversed LED	rEUr.r
C	19	o2F	Out 2 function	H.rEG = Heating output	H.rEG
C	21	o2Ac	Out 2 action	dir = Direct action rEU = Reverse action dir.r = Direct with reversed LED ReU.r = Reverse with reversed LED	dir
C	22	o3F	Out 3 function	H.rEG = Heating output	H.rEG
C	24	o3Ac	Out 3 action	dir = Direct action rEU = Reverse action dir.r = Direct with reversed LED ReU.r = Reverse with reversed LED	dir

AL1 GROUP - Alarm 1 parameters					
Liv	**N°**	**Param**	**Descrizione**	**Values**	**Default**
C	28	AL1t	Tipo allarme AL1	nonE = Alarm not used LoAb = Absolute low alarm HiAb = Absolute high alarm LHAo = Windows alarm in alarm outside the windows LHAI = Windows alarm in alarm inside the	HidE

				windows SE.br = Sensor Break LodE = Deviation low alarm (relative) HidE = Deviation high alarm (relative) LHdo = Relative band alarm in alarm out of the band LHdi = Relative band alarm in alarm inside the band	
C	29	Ab1	Alarm 1 function	0... 15 +1 = Not active at power up +2 = Latched alarm (manual reset) +4 = Acknowledgeable alarm +8 = Relative alarm not active at set point change	0
C	30	AL1L	-- For High and low alarms, it is the low limit of the AL1 threshold; -- For band alarm, it is low alarm threshold	-1999... AL1H (E.U.)	-199.9
C	31	AL1H	-- For High and low alarms, it is the high limit of the AL1 threshold; -- For band alarm, it is high alarm threshold	AL1L... 9999 (E.U.)	999.9
O	32	AL1	AL1 threshold	AL1L... AL1H (E.U.)	See page 7
O	33	HAL1	AL1 hysteresis	1... 9999 (E.U.)	See page 7
C	34	AL1d	AL1 delay	0 (oFF)... 9999 (s)	oFF
C	35	AL1o	Alarm 1 enabling during Stand-by mode and out of range conditions	0 = Alarm 1 disabled during Stand by and out of range 1 = Alarm 1 enabled in stand by mode 2 = Alarm 1 enabled in out of range condition 3 = Alarm 1 enabled in stand by mode and in overrange condition	1

GRUPPO AL2 - parametri allarme 2					
Liv	**N°**	**Param**	**Description**	**Values**	**Default**
C	36	AL2t	Alarm 2 type	nonE = Alarm not used LoAb = Absolute low alarm HiAb = Absolute high alarm LHAo = Windows alarm in alarm outside the windows LHAI = Windows alarm in alarm inside the windows SE.br = Sensor Break LodE = Deviation low alarm (relative) HidE = Deviation high alarm (relative) LHdo = Relative band alarm in alarm out of the band LHdi = Relative band alarm in alarm inside the band	SE.br
C	37	Ab2	Alarm 2 function	0... 15 +1 = Not active at power up +2 = Latched alarm (manual reset) +4 = Acknowledgeable alarm +8 = Relative alarm not active at set point change	0
C	42	AL2d	AL2 hysteresis	0 (oFF)... 9999 (s)	oFF
C	43	AL2o	Alarm 2 enabling during Stand-by mode and out of range conditions	0 = Alarm 2 disabled during Stand by and out of range 1 = Alarm 2 enabled in stand by mode 2 = Alarm 2 enabled in out of range condition 3 = Alarm 2 enabled in stand by mode and in overrange condition	0

AL3 Group - alarm 3 parameters					
Liv	**N°**	**Param**	**Description**	**Values**	**Default**
	44	AL3t	Alarm 3 type	nonE = Alarm not used LoAb = Absolute low alarm HiAb = Absolute high alarm LHAo = Windows alarm in alarm outside the windows LHAI = Windows alarm in alarm inside the windows SE.br = Sensor Break LodE = Deviation low alarm (relative) HidE = Deviation high alarm (relative) LHdo = Relative band alarm in alarm out of the band LHdi = Relative band alarm in alarm inside the band	nonE

LbA Group - Loop break alarm					
Liv	**N°**	**Param**	**Descrizione**	**Values**	**Default**
C	52	LbAt	LBA time	Da 0 (oFF) a 9999 (s)	oFF

rEG Group - Control parameters					
Liv	**N°**	**Param**	**Description**	**Values**	**Default**
C	56	cont	Control type	Pid = PID (heat and/or) On.FA = ON/OFF asymmetric hysteresis On.FS = ON/OFF symmetric hysteresis nr = Heat/Cool ON/OFF control with neutral zone 3Pt = Servomotor control (available only when Output 2 and Output 3 have been ordered as “M”)	3pt
C	57	Auto	Autotuning selection	-4 = Oscillating auto-tune with automaticrestart at power up and after all point change -3 = Oscillating auto-tune with manual start -2 = Oscillating -tune with auto-matic start at the first power up only -1 = Oscillating auto-tune with auto-matic restart at every power up 0 = Not used 1 = Fast auto tuning with automatic restart at every power up 2 = Fast auto-tune with automatic start the first power up only 3 = FAST auto-tune with manual start 4 = FAST auto-tune with automatic restart at power up and after set point change 5 = Evo-tune with automatic restart at every power up 6 = Evo-tune with automatic start the first power up only 7 = Evo-tune with manual start 8 = Evo-tune with automatic restart at power up and after a set point change	7
C	58	tunE	Manual start of the Autotuning	oFF = Not active on = Active	oFF

C	59	SELF	Self tuning enabling	no = The instrument does not perform the self-tuning YES = The instrument is performing the self-tuning	No
A	62	Pb	Proportional band	1... 9999 (E.U.)	See page 7
A	63	ti	Integral time	0 (oFF) ... 9999 (s)	See page 7
A	64	td	Derivative time	0 (oFF) ... 9999 (s)	See page 7
C	65	Fuoc	Fuzzy overshoot control	0.00... 2.00	1
C	69	rS	Manual reset (Integral pre-load)	-100.0... +100.0 (%)	0.0
A	70	Str.t	Servomotor stroke time	5...1000 seconds	See page 7
A	71	db.S	Servomotor dead band	0...100%	5
C	72	od	Delay at power up	0.00 (oFF) ... 99.59 (hh.mm)	oFF

SP Group - Set point parameters

Liv	N°	Param	Description	Values	Default
C	76	nSP	Number of used set points	1... 4	2
A	77	SPLL	Minimum set point value	-1999 ... SPHL	See page 7
A	78	SPHL	Maximum set point value	SPLL ... 9999	See page 7
O	79	SP	Set point 1	SPLL ... SPLH	See page 7
C	80	SP 2	Set point 2	SPLL ... SPLH	60
	83	A.SP	Selection of the active set point	"SP" ... " nSP"	SP
C	84	SP.rt	Remote set point type	RSP = The value coming from serial link is used as remote set point trin = The value will be added to the local set point selected by A.SP and the sum becomes the operative set point PErc = The value will be scaled on the input range and this value will be used as remote SP	trin
C	85	SPLr	Local/remote set point selection	Loc = Local rEn = Remote	Loc
C	86	SP.u	Rate of rise for POSITIVE set point change (ramp UP)	0.01... 99.99 (inF) Eng. units per minute	inF
C	87	SP.d	Rate of rise for NEGATIVE set point change (ramp DOWN)	0.01... 99.99 (inF) Eng. units per minute	inF

PAn Group - Operator HMI

Liv	N°	Param	Description	Values	Default
C	118	PAS2	Level 2 password (limited access level)	oFF (Level 2 not protected by password) 1... 200	20
C	119	PAS3	Level 3 password (complete configuration level)	3... 300	30
C	120	PAS4	Password livello (livello configurazione a codice)	201... 400	300
C	121	uSrb	button function during RUN TIME	nonE = No function tunE = Auto-tune/self-tune enabling. A single press (longer than 1 second) starts the auto-tune oPLo = Manual mode. The first pressure puts the instrument in manual mode (OPLO) while a second one puts the instrument in Auto mode	tunE

				AAc = Alarm reset ASi = Alarm acknowledge chSP = Sequential set point selection St.by = Stand by mode. The first press puts the instrument in stand by mode while a second one puts the instrument in Auto mode. Str.t = Timer run/hold/reset P.run = Program run P.rES = Program reset P.r.H.r = Program run/hold/reset	
C	122	diSP	Display management	Spo = Operative set point	SPo
C	123	di.cL	Display colour	0 = The display colour is used to show the actual deviation (PV - SP) 1 = Display red (fix) 2 = Display green (fix) 3 = Display orange (fix)	2
	125	diS.t	Display Timeout	-- oFF (display always ON) -- 0.1... 99.59 (mm.ss)	oFF
C	126	fiLd	Filter on the displayed value	-- oFF (filter disabled) -- From 0.0 (oFF) to 20.0 (E.U.)	oFF
C	128	dSPu	Instrument status at power ON	AS.Pr = Starts in the same way it was prior to the power down Auto = Starts in Auto mode oP.0 = Starts in manual mode with a power output equal to zero St.bY = Starts in stand-by mode	Auto
C	129	oPr.E	Operative modes enabling	ALL = All modes will be selectable by the next parameter Au.oP = Auto and manual (OPLO) mode only will be selectable by the next parameter Au.Sb = Auto and Stand-by modes only will be selectable by the next parameter	ALL
C	130	oPEr	Operative mode selection	If oPr.E = ALL: - Auto = Auto mode - oPLo = Manual mode - St.bY = Stand by mode If oPr.E = Au.oP: - Auto = Auto mode - oPLo = Manual mode If oPr.E = Au.Sb: - Auto = Auto mode - St.bY = Stand by mode	Auto

SEr Group - Serial link parameter					
Liv	**N°**	**Param**	**Description**	**Values**	**Default**
C	131	Add	Instrument address	-- oFF -- 1... 254	1
C	132	bAud	baud rate	1200 = 1200 baud 2400 = 2400 baud 9600 = 9600 baud 19.2 = 19200 baud 38.4 = 38400 baud	9600
C	133	trSP	Selection of the value to be retransmitted (Master)	nonE = Retransmission not used (the instrument is a slave) rSP = The instrument becomes a Master and retransmits the operative set point PErc = The instrument become a Master and it retransmits the power output	nonE

con Group - Consumption parameters					
Liv	**N°**	**Param**	**Description**	**Values**	**Default**
C	134	Co.tY	Count type	oFF = Not used 1 = Instantaneous power (kW) 2 = Power consumption (kW/h) 3 = Energy used during program execution. This measure starts from zero when a program runs end stops at the end of the program. A new program execution will reset the value 4 = Total worked days: number of hours the instrument is turned ON divided by 24. 5 = Total worked hours: number of hours the instrument is turned ON. 6 = Total worked days with threshold: number of hours the instrument is turned ON divided by 24, the controller is forced in stand-by when Co.ty value reaches the threshold set in [137] h.Job. 7 = Total worked hours with threshold: number of hours the instrument is turned ON, the controller is forced in stand-by when Co.ty value reaches the threshold set in [137] h.Job. 8 = Totalizer of control relay worked days: number of hours the control relay has been in ON condition, divided by 24. 9 = Totalizer of control relay worked hours: number of hours the control relay has been in ON condition. 10 = Totalizer of control relay worked days with threshold: number of hours the control relay has been in ON condition divided by 24, the controller is forced in stand-by when Co.ty value reaches the threshold set in [137] h.Job. 11 = Totalizer of control relay worked hours with threshold: number of hours the control relay has been in ON condition, the controller is forced in stand-by when Co.ty value reaches the threshold set in [137] h.Job.	oFF
C	138	t.Job	Worked time (not resettable)	0... 9999 days	0

cAL Group - User calibration group					
Liv	**N°**	**Param**	**Description**	**Values**	**Default**
C	139	AL.P	Adjust Low Point	From -1999 to (AH.P - 10) in engineering units	0
C	140	AL.o	Adjust Low Offset	-300... +300 (E.U.)	0
C	141	AH.P	Adjust High Point	From (AL.P + 10) to 9999 engineering units	999.9
C	142	AH.o	Adjust High Offset	-300... +300	0

OPERATIVE MODES

When the instrument is powered, it starts immediately to work according to the parameters values loaded in its memory. The instrument behaviour and its performance are governed by the value of the stored parameters.

At power ON the instrument can start in one of the following mode depending on its configuration:

Automatic Mode In Automatic mode the instrument drives automatically the control output according to the parameter value set and the set point/measured value.

Manual Mode (OPLO): In Manual mode the the upper display shows the measured value while the lower display shows the power output The lower display shows the power output [preceded by H (for heating) or C (for cooling)], MAN is lit and the instrument allows you to set manually the control output power. No Automatic action will be made.

Stand by Mode (St.bY): In stand-by mode the instrument operates as an indicator. It will show on the upper display the measured value and on the lower display the set point alternately to the “St.bY” messages and forces the control outputs to zero.

We define all the above described conditions as “Standard Display”.

As we have seen, it is always possible to modify the value assigned to a parameter independently from the operative modes selected.

AUTOMATIC MODE

Keyboard function when the instrument is in Auto mode:

	Modo Operatore
	Allows entry into parameter modification procedures
	Allows you to start the “Direct set point modification” function (see below).
	Allows you to display the “additional informations” (see below).
	Performs the action programmed by [121] uSrb (button function during RUN TIME) parameter

Additional information
This instrument is able to show you some additional informations that can help you to manage your system.
The additional informations are related to how the instrument is programmed, hence in many cases, only part of this information is available.

1. When the instrument is showing the “standard display” push button. The lower display will show H or c followed by a number. This value is the current power output applied to the process. The H show you that the action is a Heating action while the "c" show you that the action is a Cooling action
2. Push button again. When the programmer is running the lower display will show the segment currently performed and the Event status as shown below:
   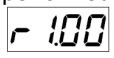 where the first character can be r for a ramp or S for a soak, the next digit show the number of the segment (e.g. S3 means Soak number 3) and the twoless significant digits (LSD) show you the status of the two event (the LSD is the Event 2)..
3. Push button again. When the programmer is running the lower display will show the theoretical remaining time to the end of the program preceded by a "P" letter:
   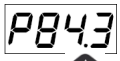
4. Push button again. When the wattmeter function is running the lower display will show U followed by the measured energy..
5. Push button. When the “Worked time count” is running the lower display will show "d" for days or "h" for hours followed by the measured time.
6. Push button. The instrument returns to the "standard display".

Note: The additional information visualization is subject to a time out. If no button is pressed for more than 10 second the instrument comes automatically back to the Standard display..

Direct set point modification
This function allows to modify rapidly the set point value selected by [83] A.SP (selection of the active Set point) or to the set point of the segment group (of the programmer) currently in progress.

1. Push button. The upper display shows the acronym of the selected set point (e.g. SP2) and the lower display will show its value.
2. By and buttons, assign to this parameter the desired value
3. Do not push any button for more than 5 second or push the button. In both cases the instrument memorize the new value and come back to the “standard display”.

Manual mode

This operative mode allows you to deactivate automatic control and manually program the percentage power output to the process. When the instrument is in manual mode, the upper display shows the measured value while the lower display shows the power output [preceded by H (for heating action) or C (for cooling action)] The MAN LED is lit. When manual control is selected, the instrument will start to operate with the same power output as the last one supplied by automatic mode and can be modified using the and buttons.

In case of ON/OFF control, 0% corresponds to the deactivated output while any value different from 0 corresponds to the activated output. As in the case of visualization, the programmable values range from H100 (100% output power with reverse action) to C100 (100% output power with direct action).

Notes:

- During manual mode, the alarms are operative.
- If you set manual modes during program execution, the program will be frozen and it will restart when the instrument will come back to Auto mode.
- If you set manual modes during self-tune execution, the self- tune function will be aborted.
- During manual mode, all functions not related with the control (wattmeter, independent timer, “worked time”, etc) continue to operate normally..

STAND-BY MODE

This operative mode also deactivates the automatic control but forces the control output to zero. In this mode the instrument operates as an indicator. When the instrument is in stand by mode the upper display will show the measured value while the lower display will show alternately the set point and the message “St.bY”.

Notes:

- During stand by mode, the relative alarms are disabled while the absolute alarms are operative or not according to the ALxo (Alarm x enabling during Stand-by mode) parameter setting.
- If you set stand by mode during program execution, the program will be aborted.
- If you set stand by mode during self-tune execution, the self- tune function will be aborted.
- During stand by mode, all functions not related with the control (wattmeter, independent timer, “worked time”, etc) continue to operate normally.
- When the instrument is swapped from stand by to auto modes, the instrument will start automatically the alarm masking, the soft start functions and the auto-tune (if programmed).

AUTOTUNE (EVOTUNE)

Evotune is a fast and fully automatic procedure that can be started in any condition, regardless the deviation from SP. The controller selects automatically the best tune method and computes the optimum PID parameters. To activate Evotune press button for 3 seconds.

ERROR MESSAGES

The upper display shows the OVER-RANGE and UNDERRANGE conditions with the following indications:

Over-range:

Under-range

The sensor break will be signalled as an out of range:

Note: When an over-range or an under-range is detected, the alarms operate as in presence of the maximum or the minimum measurable value respectively.

To check the out of span Error condition, proceed as follows:

1. Check the input signal source and the connecting line.
2. Make sure that the input signal is in accordance with the instrument configuration. Otherwise, modify the input configuration.
3. If no error is detected, send the instrument to your supplier to be checked.

List of possible errors

ErAT Fast Auto-tune cannot start. The measure value is tooclose to the set point. Push the button in order to delete the error message.

ouLd Overload on the out 4. The messages shows that a short circuit is present on the Out 4 when it is used as output or as a transmitter power suply. When the short circuit disappears the output restart to operate..

NoAt Auto-tune not finished within 12 hours.

ErEP Possible problem of the instrument memory. The messages disappears automatically. When the error continues, send the instrument to your supplier.

RonE Possible problem of the firmware memory. When this error is detected, send the instrument to your supplier.

Errt Possible problem of the calibration memory. When this error is detected, send the instrument to your supplier.

FACTORY RESET

Sometime, e.g. when you re-configure an instrument previously used for other works or from other people or when you have made too many errors during configuration and you decided to re-configure the instrument, it is possible to restore the factory configuration. This action allows to put the instrument in a defined condition (the same it was at the first power ON).

The default data are those typical values loaded in the instrument prior to ship it from factory. To load the factory default parameter set, proceed as follows:

1. Press the ↵ button for more than 5 seconds. The upper display will show PASS while the lower display shows 0;
2. Using ▲ and ▼ buttons set the value -481;
3. Push ↵ button;
4. The instrument will turn OFF all LEDs for a few seconds, then the upper display will show dFLt (default) and then all LEDs are turned ON for 2 seconds. At this point the instrument restarts as for a new power ON.

The procedure is complete.

Note: The complete list of the default parameters is available in Chapter "Configuration".

RWF55.5X & RWF55.6X

User manual

M12926CA Rel.0.2 11/2023

DEVICE INSTALLATION

Fixing system

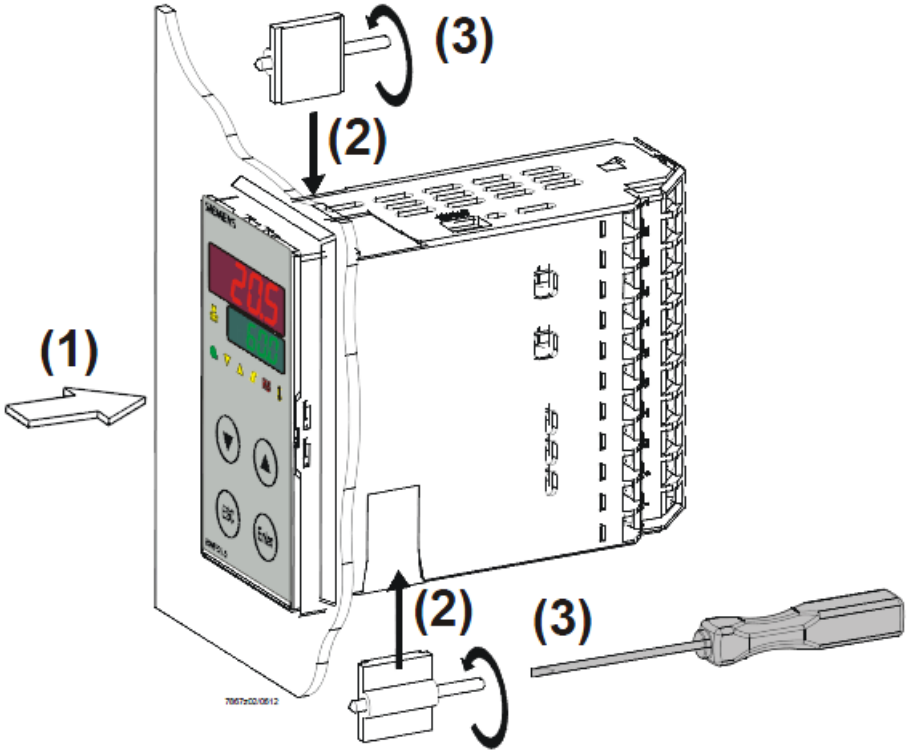

Drilling dimensions:

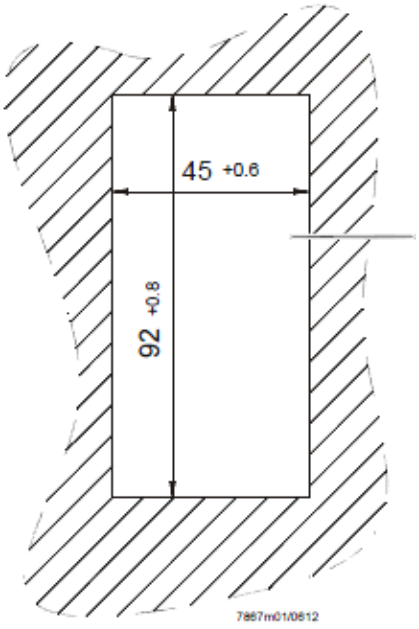

FRONT PANEL

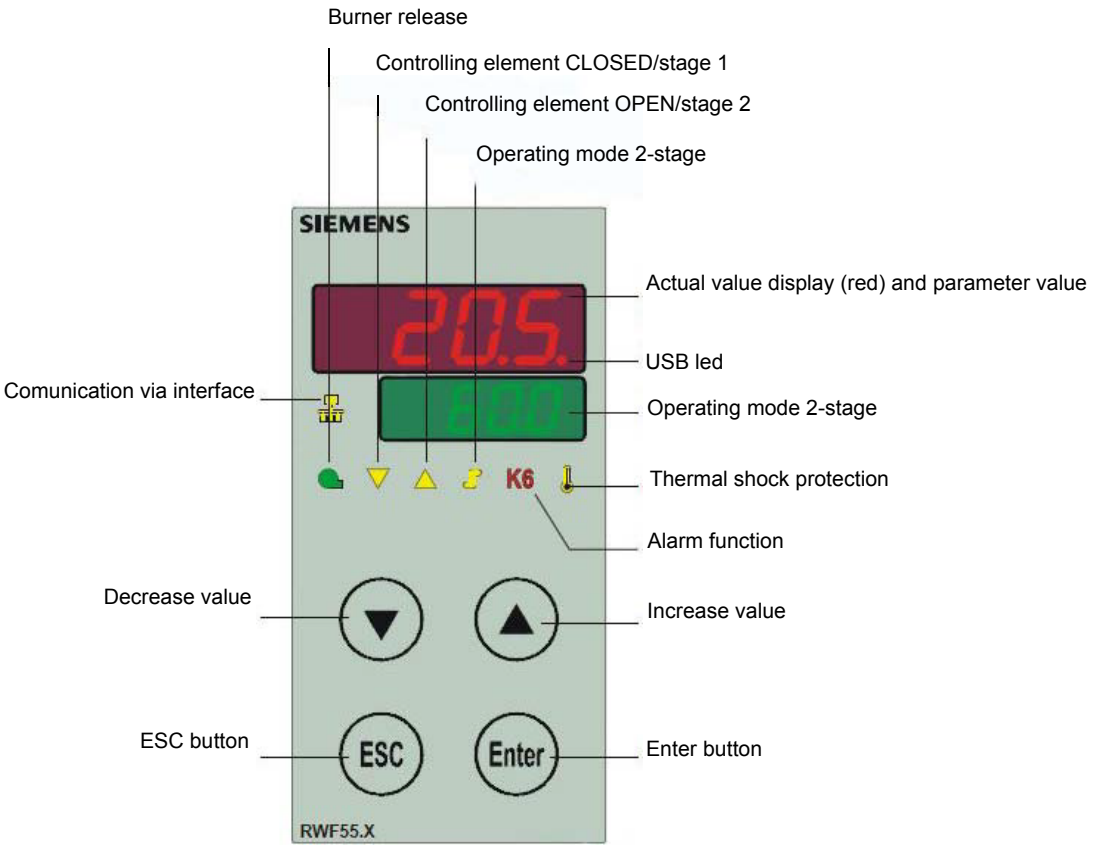
Burner release
Controlling element CLOSED/stage 1
Controlling element OPEN/stage 2
Operating mode 2-stage
SIEMENS
Actual value display (red) and parameter value
USB led
Comunication via interface
Operating mode 2-stage
K6
Thermal shock protection
Alarm function
Decrease value
Increase value
ESC button
ESC
Enter
Enter button
RWF55.X

NAVIGATION MENU

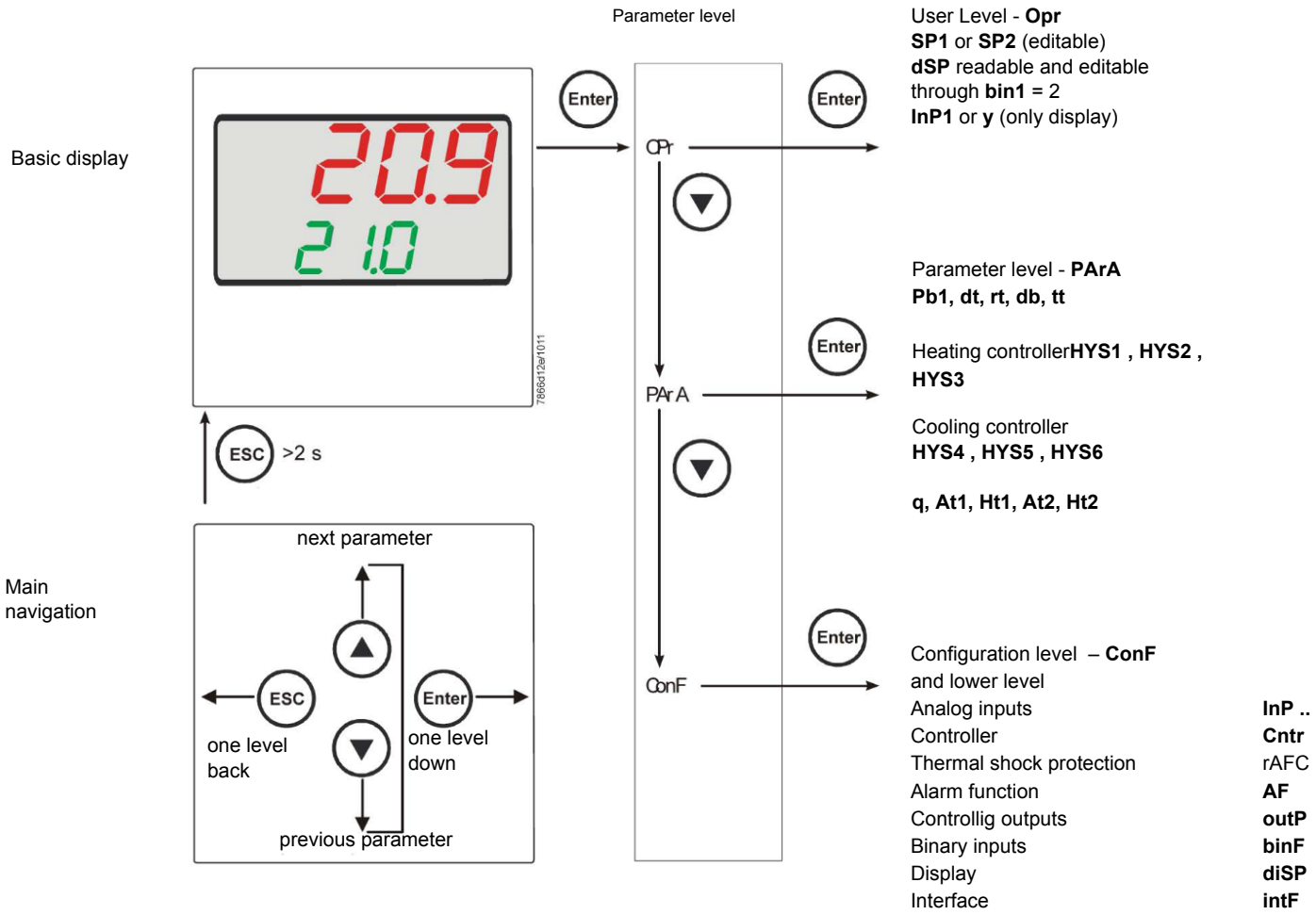

RWF55 is preset good for 90% of applications. However, you can set or edit parameters as follow:

Set-point: set or modification:

When the burner is in stand-by, (safety loop open, that is terminals 3-4/T1-T2 on the 7 pole plug open) push the Enter button: on the lower display (green) Opr appears; push Enter again and in the same display SP1 appears. Push Enter again and the lower display (green SP1) flashes. Using the up and down arrows change the set-point on the upper display (red).Push Enter to confirm and push ESC more times to get the home position.

PID parameters set and modifications (PArA):

Push **Enter** button, on the green display **Opr** appears; using the **down arrow,** scroll until group **PArA** is reached and push **Enter**.
On the green display **Pb1** e appears and on the red one the set parameter. Push is sequence the **down or up** arrow the menu is scrolled.
Push **Enter** to select and the **arrows** to choose the desired value. **Enter** to confirm

Parameter	Display	Range	Factory setting	Remarks
Proportional band	Pb1	1… 9999 digit	10	Typical value for temperature
erivative action	dt	0… 9999 sec.	80	Typical value for temperature
Integral action	rt	0… 9999 sec.	350	Typical value for temperatureT
Dead band (*)	db	0… 999,9 digit	1	Typical value
Servocontrol running time	tt	10… 3000 sec.	15	Set servocontrol running time
Switch-on differential (*)	HYS1	0,0… -1999 digit	-5	Value under setpoint below which the burner switches back on (1N-1P closes)
Switch-off differential 2° stage (*)	HYS2	0,0 … HYS3	3	(enable only with parameter bin1 = 4)
Upper switch-off differential (*)	HYS3	0,0… 9999 digit	5	Value over setpoint above which the burner switches off (1N-1P opens)
Switch-on differential on cooling controller (*)	HYS4	0,0… 9999 digit	5	Do not used (enable only with parameter **CACt** = 0)
Switch-off differential 2° stage on cooling controller (*)	HYS5	HYS6…0,0 digit	5	Do not used (enable only with parameter **CACt** = 0 and parameter **bin1**=0)
Upper switch-off differential on cooling controller (*)	HYS6	0,0… -1999 digit	5	Do not used (enable only with parameter CACt = 0)
Delay modulation	q	0,0… 999,9 digit	0	Do not alter
T Outside temperature Curve point 1 (*)	At1	-40 ...120 digit	-10	First point of external temperature for climatic curve
Boiler temperature Curve point 1 (*)	Ht1	SPL...SPH	60	Set-point temperature for the external temperature 1
TT Outside temperature Curve point 2 (*)	At2	-40 ...120 digit	20	Second point of external temperature for climatic curve
Boiler temperature Curve point 2 (*)	Ht2	SPL...SPH	50	Set-point temperature for the external temperature 2

(*) Parameters affected by setting of decimal place (**ConF > dISP** parameter **dECP**)

Setting the kind of sensor to be connected to the device:

Push the **Enter** button: on the lower display (green) **Opr** appears. Using the **up and down arrows** find **ConF.** Push **Enter** to confirm. Now on the green display the group **InP** appears. Push **Enter** and **InP1** is displaied. Enter to confirm.You are inside **InP1**; the green display shows **Sen1 (sensor type)**, while the red display shows the chosen sensor code Push **Enter** to enter the **Sen1** parameter, then choose the desired sensor using the **arrows.** Push **Enter** to confirm and **ESC** to escape.

Once selected the sensor, you can modify all the other parameters using **up and down arrows** according to the tables here below :

ConF > InP >InP1

Parameter	Value	Description
SEn1 type of sensor for analog input 1	1	Pt100 3 wire
	2	Pt100 2 wire
	3	Pt1000 3 wire
	4	Pt1000 2 wire
	5	Ni1000 3 wire
	6	Ni1000 2 wire
	7	0 ÷ 135 ohm
	8	Cu-CuNi T
	9	Fe-CuNi J
	10	NiCr-Ni K
	11	NiCrSi-NiSi N
	12	Pt10Rh-Pt S
	13	Pt13Rh-Pt R
	14	Pt30Rh-Pt6Rh B
	15	0 ÷ 20mA
	16	4 ÷ 20mA
	17	0 ÷ 10V
	18	0 ÷ 5V
	19	1 ÷ 5V
OFF1 Sensor offset	-1999..**0**.. +9999	Correction value measured by the sensor
SCL1 scale low level	-1999..**0**.. +9999	minimum scale value(for input ohm, mA, V)
SCH1 scale high level	-1999..**100**.. +9999	maximum scale value(for input ohm, mA, V)
dF1 digital filter	0…**0,6**…100	Is used to adapt the digital 2nd order input filter (time in s; 0 s = filter off)
Unit temperature unit	**1** 2	1 = **degrees** Celsius 2 = degrees Fahrenheit

(**bold** = factory settings)

ConF > InP >InP2

Input 2 : this input can be used to specify an external setpoint or carry out setpoint shifting

Parameter	Value	Description
FnC2	0 1 2 3	0= **no function** 1= external setpoint (display **SPE**) 2 =setpoint shifting (display **dSP**) 3 = angular positioning feedback
SEn2 tisensor type input 2	1	0 ÷ 20mA
	2	4 ÷ 20mA
	3	0 ÷ 10V
	4	0 ÷ 5V
	5	1 ÷ 5V
	1	0 ÷ 20mA
OFF2 Sensor offset	-1999..**0**.. +9999	Correction value measured by the sensor
SCL2 scale low level	-1999..**0**.. +9999	minimum scale value(for input ohm, mA, V)
SCH2 scale high level	-1999..**100**.. +9999	maximum scale value(for input ohm, mA, V)
dF2 digital filter	0…**2**…100	Is used to adapt the digital 2nd order input filter (time in s; 0 s = filter off)

(**bold** = factory settings)

ConF > InP >InP3

Input 3: this input is used to acquire the outside temperature

Parameter	Value	Description
SEn3 sensor type input 3sensor type input 2	0	0 =
	1	1 = wire
	2	2 = wire
OFF3 Sensor offset	-1999..**0**.. +9999	Correction value measured by the sensor
dF3 digital filter	0…**1278**…1500	Is used to adapt the digital 2nd order input filter (time in s; 0 s = filter off)

(**bold** = factory settings)

ConF > Cntr

Here, the type of controller, operating action, setpoint limits and presettings for self-optimization are selected

Parameter	Value	Description
CtYP controller type	1 2	**1 = 3-position controller (open-stop-close)** 2 = continuative action controller (0 ÷10V or 4 ÷ 20mA)
CACt control action	**1** 0	1 = **heating controller** 0 = cooling controller
SPL least value of the set-point range	-1999..**0**..+9999	minimum set-point scale
SPH maximum value of the set-point range	-1999..**100**..+999	maximum set-point scale
Self-optimization	0 1	0 = **Free** 1 = Locked Self-optimization can only be disabled or enabled via the ACS411 setup program. Self-optimization is also disabled when the parameter level is locked
oLLo set-point limitation start, operation limit low	**-1999**.... +9999	lower working range limit
oLHi set-point limitation end, operation limit high	-1999.... **+9999**	upper working range limit

(**bold** = factory settings)

ConF > rAFC

Activation boiler shock termic protetion:

RWF55.. can activate the thermal shock protection only on sites where the set-point is lower than 250°C and according to **rAL** parameter

Parameter	Value	Description
FnCT type of contol	 **0** 1 2	tchoose type of range degrees/time **0 = deactived** 1 = Kelvin degrees/minute 2 = Kelvin degrees/hour
rASL ramp rate	**0,0 …** 999,9	Slope of thermal shock protection (only with functions 1 and 2) .
toLP tolerance band ramp	**2 x (HYS1) = 10**…9999	width of tolerance band (in K) about the set-point **0 = tolerance band inactive** 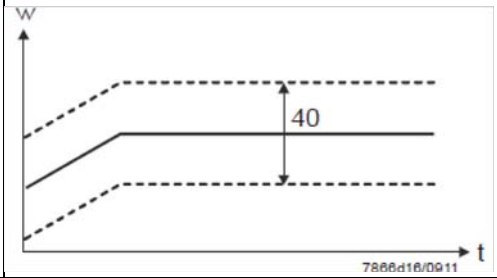
rAL ramp limit	**0**…250	Ramp limit. When this value is lower than the temperature set-point, the RWF controls the output increasing the temp set point step by step according to **rASL**. If this is over the temp set point, the control is performed in cooling

(**bold** = factory settings)

Alarm functionAF

The alarm function can be used to monitor the analog inputs. If the limit value is exceeded, multifunctional relay K6 (terminals **6N** and **6P**) is activated (depending on the switching characteristic)

The alarm function can have different switching functions (lk1 to lk8) and can be set to a deviation from the active setpoint or to a fixed limit value

Limit value **AL** relative to setpoint (x)

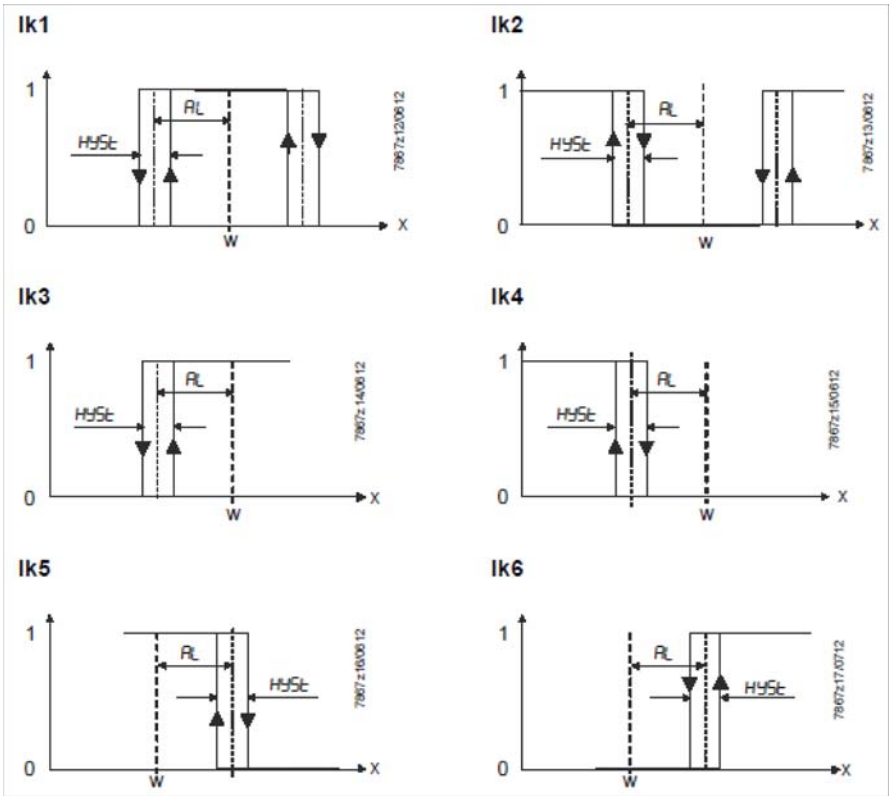

Fixed limit value **AL**

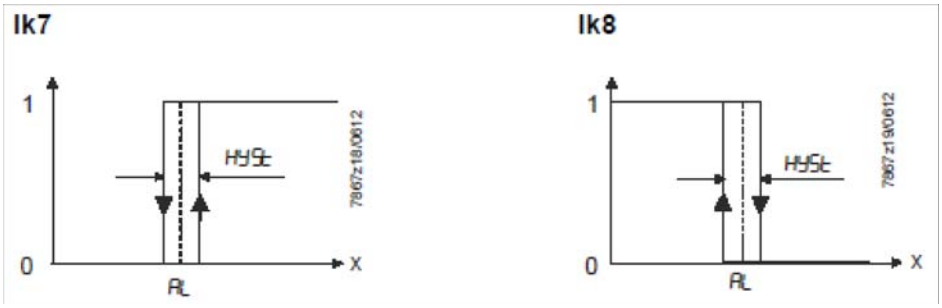

ConF > AF

Parameter	Value	Description
FnCt type of control	0 1 2 3 4 5 6 7 8 9 10 11 12	0 = **Without function** Ik1 = monitored input **InP1** Ik2 = monitored input **InP1** Ik3 = monitored input **InP1** Ik4 = monitored input **InP1** Ik5 = monitored input **InP1** Ik6 = monitored input **InP1** Ik7 = monitored input **InP1** Ik8 = monitored input **InP1** Ik7 = monitored input **InP2** Ik8 = monitored input **InP2** Ik7 = monitored input **InP3** Ik8 = monitored input **InP3**
Alarm value AL	-1999 ... **0** 1999	Limit value or deviation from setpoint to be monitored (see alarm functions **Ik1** to **Ik8**: limit value **AL**) Limit value range for **Ik1** and **Ik2**0 ...9999
HySt switching differential	0… **1**... 9999	Switching differential for limit value **AL**
ACrA response by out of range	**0** 1	**Switched-off** ON Switching state in the case of measuring range overshoot or undershoot (Out of Range)

(**bold** = factory settings)

ConF > OutP

For fuel-air ratio control purposes, the RWF55 has the binary outputs K2, K3 (terminals KQ,K2, K3) and the analog output (terminals A+, A-). The burner is released via relay K1 (terminals 1N, 1P) .

The binary outputs of the RWF55 offer no setting choices

The RWF55 has an analog output.

The analog output offers the following setting choices:

Parameter	Value	Description
FnCt type of control	1 2 3 **4**	1 = analog input 1 doubling with possibility to convert 2 = analog input 2 doubling with possibility to convert 3 = analog input 3 doubling with possibility to convert **4 = Controller's angular positioning is delivered (modulating controller)**
SiGn type of output signal	 **0** 1 2	physical output signal (terminals A+, A-) **0 = 0÷20mA** 1 = 4÷20mA 2 = 0÷10V DC
rOut value when out of input range	**0**…101	signal (in percent) when measurement range is crossed
oPnt zero point	-1999…**0**..+9999	A value range of the output variable is assigned to a physical output signal (for **FnCt** = 1, 2, 3)
End end point	-1999…**100**..+9999	A value range of the output variable is assigned to a physical output signal (for **FnCt** = 1, 2, 3)

(**bold** = factory settings)

ConF > binF

This setting decides on the use of the binary inputs**D1**, **D2**, **DG**

b

Parameter	Value	Description
bin1 binary imput 1 (terminals **DG – D1**)	**0** 1 2 3	**0 = without function** 1 = set-point changeover (SP1 / SP2) 2 = Iset-point shift (Opr > dSP parameter = value of set-point modify) 3 = input alarm
bin2 binary imput 2 (terminalsк **DG – D2**)	**4**	**changeover of operating mode** DG-D2 open = modulating operation DG-D2 close = 2 stage operation

(**bold** = factory settings)

ConF > dISP

.Both displays can be customized to suit your needs by configuring the displayed value, decimal, time out and blocking

Parameter	Value	Description
diSU pper display (red)	0 **1** 2 3 4 6 7	Display value for upper display: 0 = display power-off **1 = analog input 1 (InP1) value** 2 = analog input 2 (InP2) value 3 = analog input 3 (InP3) value 4 = controller's angular positioning 6 = set-point valueв 7 = end value with thermal shock protection
diSL lower display (green)	0 1 2 3 4 **6** 7	Display value for lower display3: 0 = display power-off 1 = analog input 2 (InP2) value 2 = analog input 2 (InP2) value 3 = analog input 2 (InP2) value 4 = controller's angular positioning **6 =** set-point value**в** 7 = end value with thermal shock protection
tout timeout	0..**180**..250	time (s) on completion of which the controller returns automatically to the basic display, if no button is pressed
dECP decimal point	**0** 1 2	**0 = no decimal place** 1 = one decimal place 2 = two decimal place
CodE level lockout	**0** 1 2 3	**0 = no lockout** 1 = configuration level lockout (**ConF**) 2 = parameter and configuration level lockout (**PArA** & **ConF**) 3 = keyboard lockout

(**bold** = factory settings)

ConF > IntF

The controller can be integrated into a data network using an optional RS-485 (terminals R+ and R-) interface or an optional Profibus DP interface(only model**RWF55.6x** terminalsC1-C2-C3-C4)

Parameter	Value	Description
bdrt baudrate	**0** 1 2 3	**0 = 4800 baud** 1 = 9600 baud 2 = 19200 baud 3 = 38400 baud
Adr Device address Modbus	0.. **1**.. 254	Address in the data network
dP Device address Profibus	0..**125**	only withRWF55.6x
dtt Remote detection time	0.. **30**.. 7200s	0 = swiched-off

(**bold** = factory settings)

Manual control :

In order to manual change the burner load, while firing keep pushing the **ESC** button for more than 5 s; on the lower green display **Hand** appears.

using the **UP** and **DOWN** arrows, the load varies.

Keep pushing the **ESC** button for getting the normal operation again.

NB: every time the device shuts the burner down (start led switched off - contact 1N-1P open), the manual control is not active.

Device self-setting (auto-tuning):

If the burner in the steady state does not respond properly to heat generator requests, you can activate the Device's self-setting function, which recalculates PID values for its operation, deciding which are most suitable for the specific kind of request

Follow the below instructions:

push the **UP** and **DOWN** arrows for more than 5 s; on the green lower display **tUnE** appears. Now the device pushes the burner to increase and decrease its output. During this time, the device calculates **PID** parameters (**Pb1**, **dt** and **rt**). After the calculations, the **tUnE** is automatically deactivated and the device has already stored them.

In order to stop the Auto-tuning function while it works, push again the **UP** and **DOWN** arrows for more than 5 s. The calculated **PID** parameters can be manually modified following the previously described instructions.

Display of software version :

The software version is shown by pushing Enter + UP arrow on the upper display.

Weather-compensated setpoint shifting(climatic regulation):

The RWF55 can be configured so that weather-compensated setpoint shifting is activated when an LG-Ni1000 outside sensor or a Pt1000 is connected (see parameter **InP3**).

To take into account the time response of a building, weather-compensated setpoint shifting uses the attenuated outside temperature rather than the current outside temperature

The minimum and maximum setpoints can be set using the lower setpoint limit **SPL** and the upper setpoint limit **SPH** of the menù **Crtr**.

The system also prevents the lower working range limit **oLLo** and upper working range limit **oLHi** from exceeding/dropping below the system temperature limits.

The heating curve describes the relationship between the boiler temperature setpoint and the outside temperature. It is defined by 2 curve points. For 2 outside temperatures, the user defines the boiler temperature setpoint that is required in each case. The heating curve for the weather-compensated setpoint is calculated on this basis. The effective boiler temperature setpoint is limited by the upper setpoint limit **SPH** and the lower setpoint limit **SPL**.

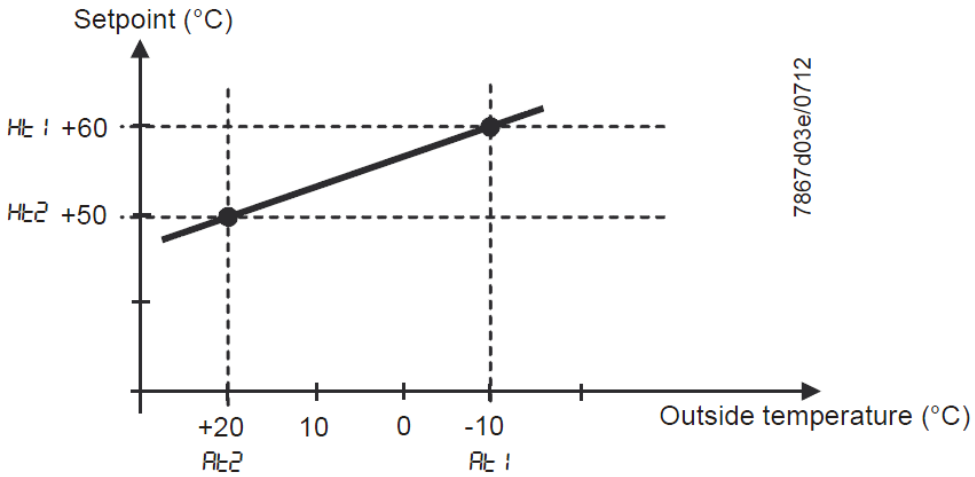

For setting climatic regulation function set:

PArA > parameters**At1, Ht1, At2, Ht2**

ConF > InP > InP3 parameters**SEn3, FnC3 = 1** (Weather-compensated setpoint).

Modbus interface

The tables that follow in this chapter specify the addresses of the readable and writable words that the customer is able to access. The customer may read and/or write the values using SCADA programs, PLCs, or similar.

The entries under Access have the following meanings:

R/O Read Only, value can only be read

R/W Read/Write, value can be read and written

The number of characters specified under Data type in the case of character strings includes the final \0.

Char10 means that the text is up to 9 characters long. The final \0 character is then added to this

User level

Address	**Access**	**Data type**	Signal reference	Parameter
0x0000	R/O	Float	X1	Analog input InP1
0x0002	R/O	Float	X2	Analog input InP2
0x0004	R/O	Float	X3	Analog input InP2
0x0006	R/O	Float	WR	Actual setpoint
0x0008	R/W	Float	SP1	Setpoint 1
0x000A	R/W	Float	SP2 (= dSP)	Setpoint 2
0x1035	R/O	Float	---	Analog input InP3 (unfiltered)
0x1043	R/O	Float	---	Actual angular positioning
0x1058	R/O	Word	B1	Burner alarm

Parameter level

Address	**Access**	**Data type**	Signal reference	Parameter
0x3000	R/W	Float	Pb1	Proportional range 1
0x3004	R/W	Float	dt	Derivative action time
0x3006	R/W	Float	rt	Integral action time
0x300C	R/W	Float	db	Dead band
0x3012	R/W	Word	tt	Controlling element running time
0x3016	R/W	Float	HYS1	Switch-on threshold
0x3018	R/W	Float	HYS2	Switch-off threshold down
0x301A	R/W	Float	HYS3	Switch-off threshold up
0x301C	R/W	Float	HYS4	Switch-on threshold (cooling)
0x301E	R/W	Float	HYS5	Switch-off threshold down (cooling)
0x3020	R/W	Float	HYS6	Switch-off threshold up (cooling)
0x3022	R/W	Float	**q**	Reaction threshold
0x3080	R/W	Float	At1	Outside temperature 1
0x3082	R/W	Float	Ht2	Boiler temperature 1
0x3084	R/W	Float	At2	Outside temperature 2
0x3086	R/W	Float	Ht2	Boiler temperature 2

Configuration level

Address	Access	Data type	Signal reference	Parameter
0x3426	R/W	Float	SCL1	Start of display input 1
0x3428	R/W	Float	SCH1	End of display input 1
0x3432	R/W	Float	SCL2	Start value input 2
0x3434	R/W	Float	SCH2	End value input 2
0x3486	R/W	Float	SPL	Start of setpoint limitation
0x3488	R/W	Float	SPH	End of setpoint limitation
0x342A	R/W	Float	OFFS1	Offset input E1
0x3436	R/W	Float	OFFS2	Offset input E2
0x343A	R/W	Float	OFFS3	Offset input E3
0x1063	R/W	Word	FnCt	Ramp function
0x1065	R/W	Float	rASL	Ramp slope
0x1067	R/W	Float	toLP	Tolerance band ramp
0x1069	R/W	Float	rAL	Limit value
0x1075	R/W	Float	dtt	Remote Detection Timer
0x1077	R/W	Float	dF1	Filter constant input 1
0x1079	R/W	Float	dF2	Filter constant input 2
0x107B	R/W	Float	dF3	Filter constant input 3
0x107D	R/O	Float	oLLo	Lower working range limit
0x107F	R/O	Float	oLHi	Upper working range limit
0x106D	R/W	Word	FnCt	Alarm relay function
0x106F	R/W	Float	AL	Alarm relay limit value (limit value alarm)
0x1071	R/W	Float	HYSt	Alarm relay hysteresis

Remote operation

Address	Access	Data type	Signal reference	Parameter
0x0500	R/W	Word	REM	Activation remote operation *
0x0501	R/W	Word	rOFF	Controller OFF in remote setpoint **
0x0502	R/W	Float	rHYS1	Switch-on threshold remote
0x0504	R/W	Float	rHYS2	Switch-off threshold down remote
0x0506	R/W	Float	rHYS3	Switch-off threshold up remote
0x0508	R/W	Float	SPr	Setpoint remote
0x050A	R/W	Word	RK1	Burner release remote operation
0x050B	R/W	Word	RK2	Relay K2 remote operation
0x050C	R/W	Word	RK3	Relay K3 remote operation
0x050D	R/W	Word	RK6	Relay K6 remote operation
0x050E	R/W	Word	rStEP	Step-by-step control remote operation
0x050F	R/W	Float	rY	Angular positioning output remote operation
0x0511	R/W	Float	rHYS4	Switch-on threshold remote (cooling)
0x0513	R/W	Float	rHYS5	Switch-off threshold down remote (cooling)
0x0515	R/W	Float	rHYS6	Switch-off threshold up remote (cooling)

Legend

* = Local

** = Controller OFF

Dati dell’apparecchio

Address	Access	Data type	Signal reference	Parameter
0x8000	R/O	Char12	---	Software version
0x8006	R/O	Char14	---	VdN number

Stato dell’apparecchio

Address	Access	Data type	Signal reference	Parameter
0x0200	R/O	Word	---	Outputs and states
			Bit 0	Output 1
			Bit 1	Output 3
			Bit 2	Output 2
			Bit 3	Output 4
			Bit 8	Hysteresis limitation
			Bit 9	Control system
			Bit 10	Self-optimization
			Bit 11	Second setpoint
			Bit 12	Measuring range overshoot InP1
			Bit 13	Measuring range overshoot InP2
			Bit 14	Measuring range overshoot InP3
			Bit 15	Calibration mode
0x0201	R/O	Word	---	Binary signals and hardware detection
			Bit 0	Operation mode 2-stage
			Bit 1	Manual mode
			Bit 2	Binary input D1
			Bit 3	Binary input D2
			Bit 4	Thermostat function
			Bit 5	First controller output
			Bit 6	Second controller output
			Bit 7	Alarm relay
			Bit 13	Analog output available
			Bit 14	Interface available

Electric connections :

With 7 pins connector version

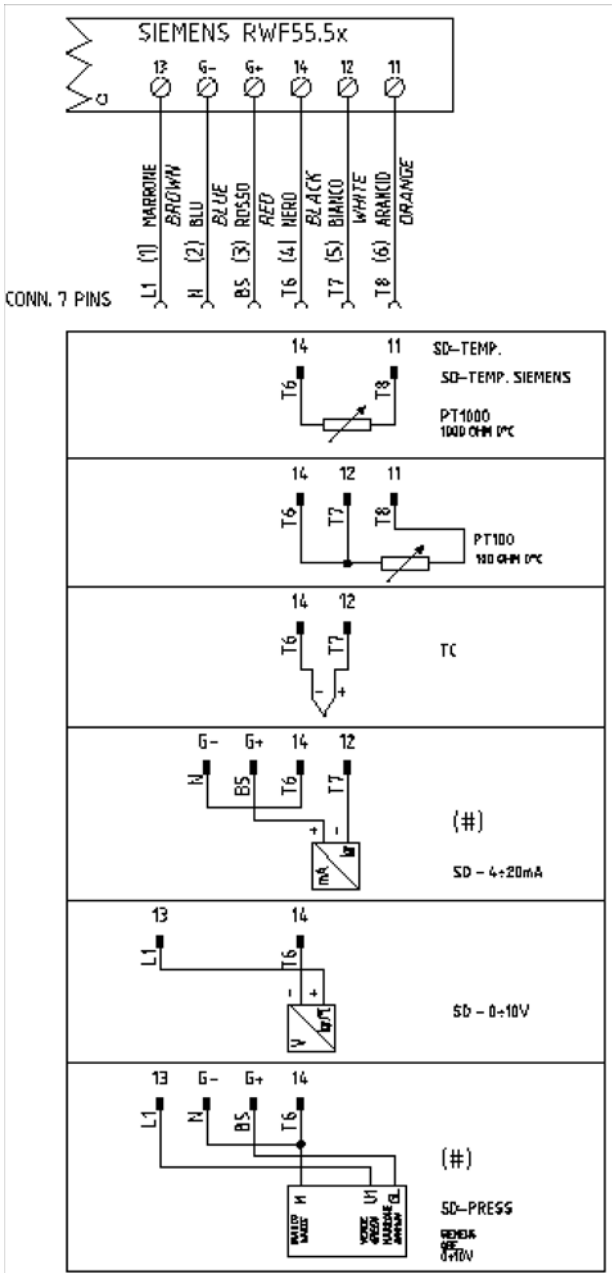

With terminals version

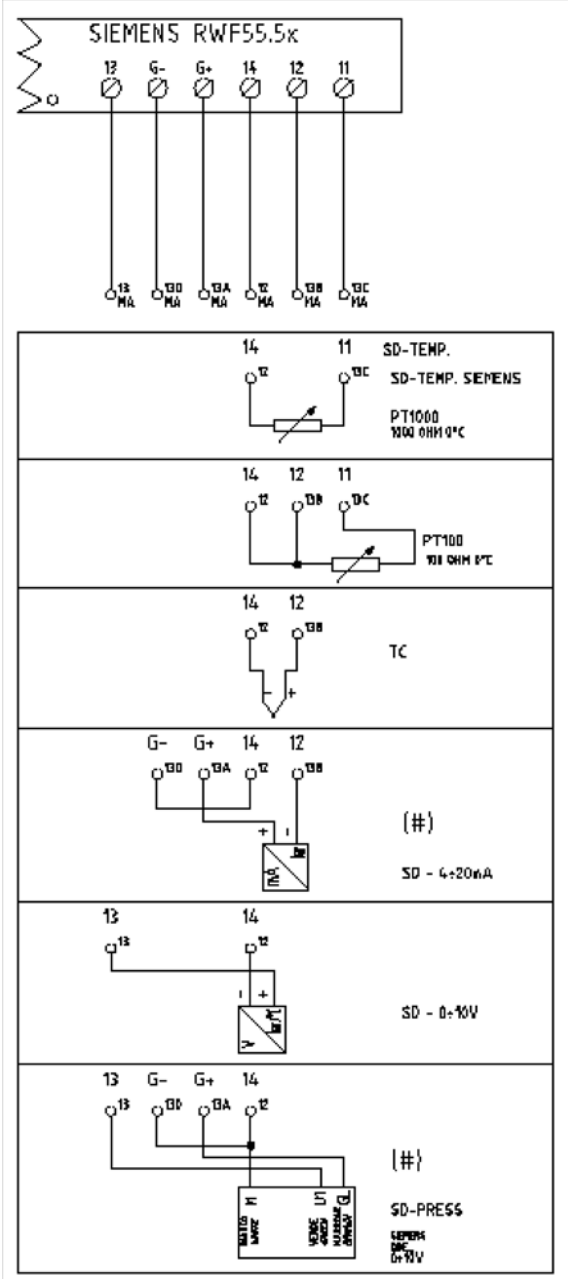

Corrispondences bornes entre RWF55.5x y RWF40.0x0Matches terminals betweenRWF55.5x and RWF40.0x0

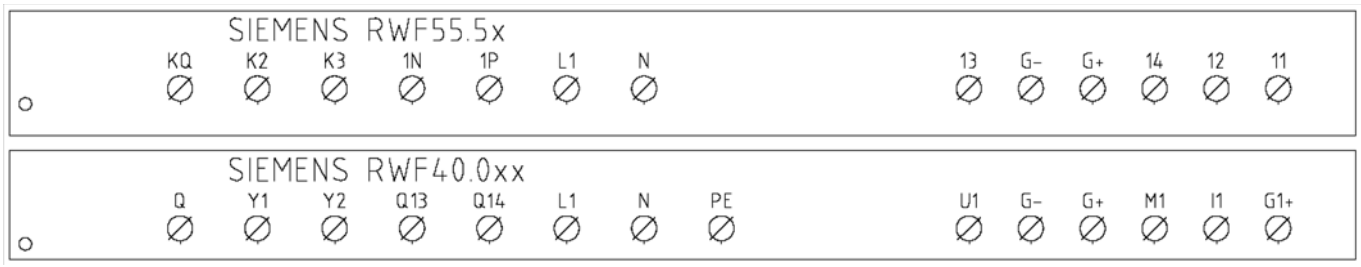

Parameters summarising for RWF55.xx :

Navigation menù	ConF					ConF			PArA						Opr
	Inp					Cntr		diSP							
	Inp1														
Types of probe	SEn1	OFF1	SCL	SCH	Unit	SPL	SPH	dECP	Pb. 1	dt	rt	tt	HYS1 (*)	HYS3 (*)	SP1 (*)
Siemens QAE2120…	6	0	needless	needless	1	30	95	1	10	80	350	(#)	-5	5	80 °C
Siemens QAM2120..	6	0	needless	needless	1	0	80	1	10	80	350	(#)	-2,5	2,5	40°C
Pt1000 (130°C max.)	4	0	needless	needless	1	30	95	1	10	80	350	(#)	-5	5	80°C
Pt1000 (350°C max.)	4	0	needless	needless	1	0	350	1	10	80	350	(#)	-5	10	80°C
Pt100 (130°C max.)	1	0	needless	needless	1	0	95	1	10	80	350	(#)	-5	5	80°C
Pt100 (350°C max)	1	0	needless	needless	1	0	350	1	10	80	350	(#)	-5	10	80°C
Probe4÷20mA / 0÷1,6bar	16	0	0	160	needless	0	160	0	5	20	80	(#)	0	20	100 kPa
Probe4÷20mA / 0÷3bar	16	0	0	300	needless	0	300	0	5	20	80	(#)	0	20	200 kPa
Probe 4÷20mA / 0÷10bar	16	0	0	1000	needless	0	1000	0	5	20	80	(#)	0	50	600 kPa
Probe 4÷20mA / 0÷16bar	16	0	0	1600	needless	0	1600	0	5	20	80	(#)	0	80	600 kPa
Probe 4÷20mA / 0÷25bar	16	0	0	2500	needless	0	2500	0	5	20	80	(#)	0	125	600 kPa
Probe 4÷20mA / 0÷40bar	16	0	0	4000	needless	0	4000	0	5	20	80	(#)	0	200	600 kPa
Probe 4÷20mA / 0÷60PSI	16	0	0	600	needless	0	600	0	5	20	80	(#)	0	30	300 (30PSI)
Probe4÷20mA / 0÷200PSI	16	0	0	2000	needless	0	2000	0	5	20	80	(#)	0	75	600 (60PSI)
Probe4÷20mA / 0÷300PSI	16	0	0	3000	needless	0	3000	0	5	20	80	(#)	0	120	600 (60PSI)
Siemens QBE2002 P4	17	0	0	400	needless	0	400	0	5	20	80	(#)	0	20	200 kPa
Siemens QBE2002 P10	17	0	0	1000	needless	0	1000	0	5	20	80	(#)	0	50	600 kPa
Siemens QBE2002 P16	17	0	0	1600	needless	0	1600	0	5	20	80	(#)	0	80	600 kPa
Siemens QBE2002 P25	17	0	0	2500	needless	0	2500	0	5	20	80	(#)	0	125	600 kPa
Siemens QBE2002 P40	17	0	0	4000	needless	0	4000	0	5	20	80	(#)	0	200	600 kPa
Signal 0÷10V	17	0	needless	needless	needless	needless	needless	needless	5	20	80	(#)			
Signal 4÷20mA	16	0	needless	needless	needless	needless	needless	needless	5	20	80	(#)			

NOTE:

(#) tt – servo control run time

SQL33 ; STM30; SQM10; SQM40; SQM50; SQM54 = 30 (secondi) - STA12B3.41; SQN30.251; SQN72.4A4A20 = 12 (secondi)

(*)These values are factory set - values must be set during operation at the plant based on the real working temperature/pressure value.

WARNING :

With pressure probes in bar the parameters SP1, SCH, SCL, HYS1, HYS3 must be set and displayed in kPa (kilo Pascal); 1bar = 100,000Pa = 100kPa.

With pressure probes in PSI the parameters SP1, SCH, SCL, HYS1, HYS3 must be set and displayed in PSI x10 (example: 150PSI > I display 1500).

APPENDIX: PROBES CONNECTION

To assure the utmost comfort, the control system needs reliable information, which can be obtained provided the sensors have been installed correctly. Sensors measure and transmit all variations encountered at their location.

Measurement is taken based on design features (time constant) and according to specific operating conditions.With wiring run in raceways, the sheath (or pipe) containing the wires must be plugged at the sensor's terminal board so that currents of air cannot affect the sensor's measurements.

Ambient probes (or ambient thermostats)

Installation

The sensors (or room thermostats) must be located in reference rooms in a position where they can take real temperature measure-ments without being affected by foreign factors.

It's good to be admired …even better to be effective

Heating systems: the room sensor must not be installed in rooms with heating units complete with thermostatic valves. Avoid all sources of heat foreign to the system.

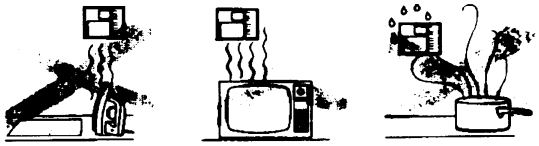

Location

On an inner wall on the other side of the room to heating unitsheight above floor 1.5 m, at least 1.5 m away from external sources of heat (or cold).

.

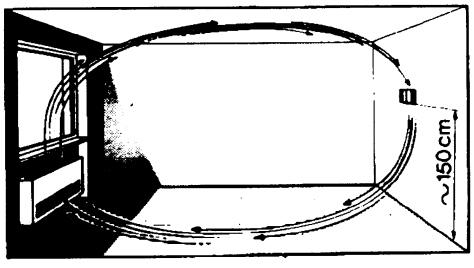

Installation position to be avoided

near shelving or alcoves and recesses, near doors or win-dows, inside outer walls exposed to solar radiation or currents of cold air, on inner walls with heating system pipes, domestic hot water pipes, or cooling system pipes running through them.

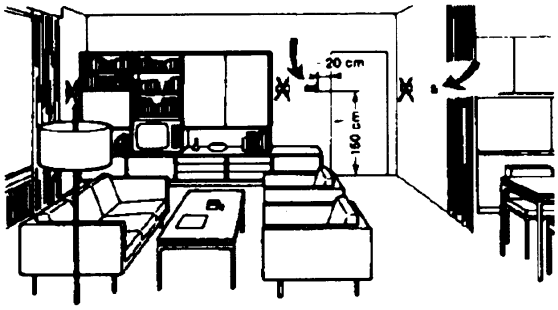

Outside probes (weather)Installation

In heating or air-conditioning systems featuring adjustment in response to outside temperature, the sensor's positioning is of paramount importance.

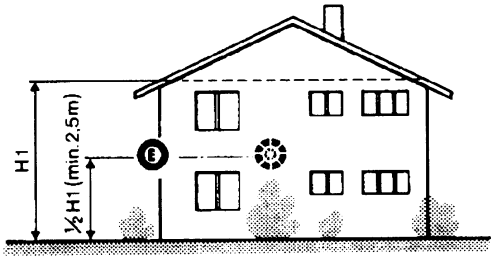

General rule: en on the outer wall of the building where the living rooms are, never on the south-facing wall or in a position where they will be affected by morning sun. If in any doubt, place them on the north or north-east façade.

Positions to be avoidedH

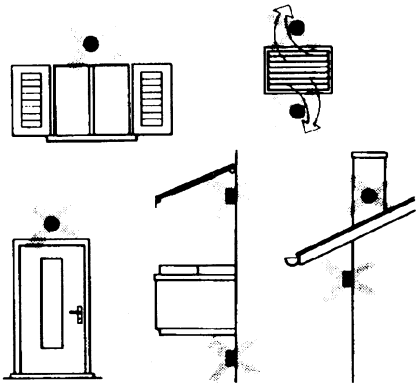

Avoid installing near windows, vents, outside the boiler room, on chimney breasts or where they are protected by balconies, cantilever roofs .

The sensor must not be painted (measurement error) .

Duct or pipe sensors

Installing temperature sensors

For measuring outlet air:

"after delivery fan or

"after coil to be controlled, at a distance of at least 0,5 m

For measuring room temperature:

"before return air intake fan and near room's return airintake.

For measuring saturation temperature: after mist eliminator.

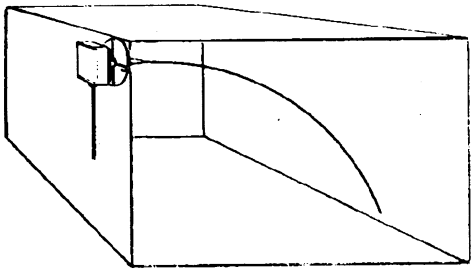

Bend 0.4m sensor by hand (never use tools) as illustrated .

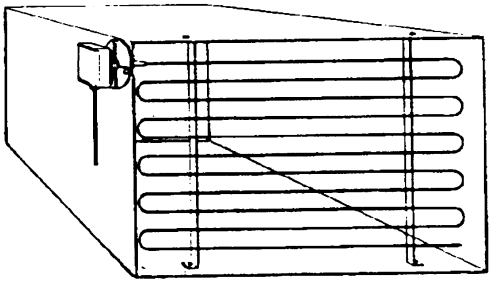

Use whole cross-section of duct, min. distance from walls 50 mm, radius of curvature 10 mm for 2m or 6m sensors

Installing combined humidity sensors

As max. humidity limit sensor on outlet (steam humidifiers) .

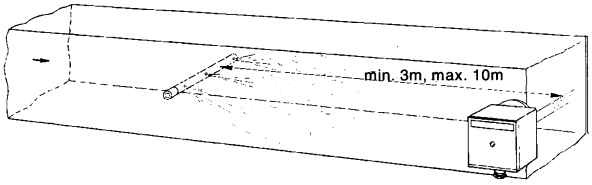

Installing pressure sensors

A - installation on ducts carrying fluids at max. temperature 80°C

B - installation on ducts at temperature over 80°C and for refrigerants

C - installation on ducts at high temperatures :

·"increase length of siphon

"place sensor at side to prevent it being hit by hot air coming from the pipe.

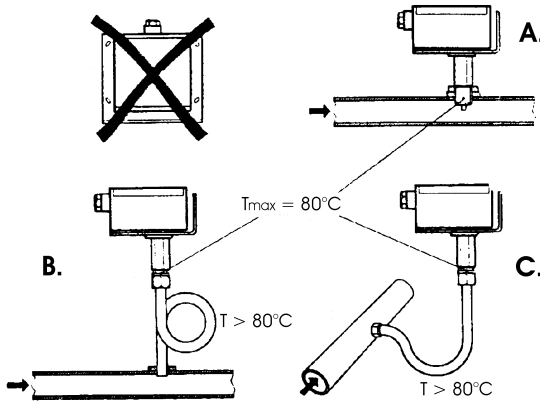

Installing differential pressure sensors for water

Installation with casing facing down not allowed.

With temperature over 80°C, siphons are needed.

To avoid damaging the sensor, you must comply with the following instructions :

when installing: make sure pressure difference is not greater than the value permitted by the sensor

when there are high static pressures, make sure you insert shutoff valves A-B-C.

Putting into operation

Start disable

1=open C1=open C

2=open A2=close B

3=open B3=close A

4= close C

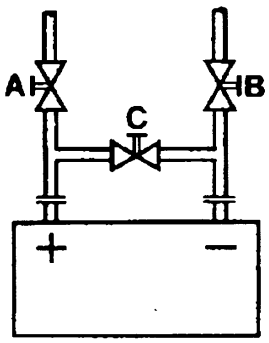

Immersion or strap-on sensors

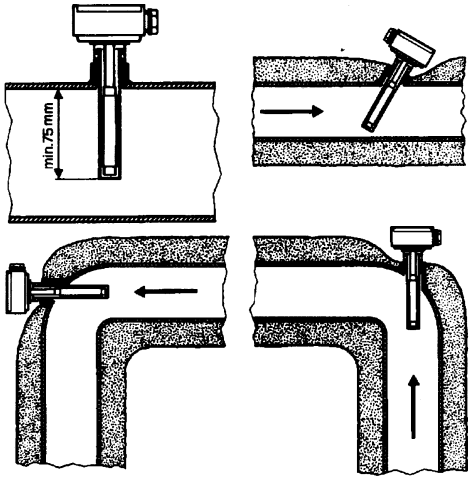

Immersion probes installation

Sensors must be installed on the stretch of pipe in which fluid circulates all the time.

The rigid stem (sensing element doing the measuring) must be inserted by at least 75mm and must face the direction of flow.

Recommended locations: on a bend or on a straight stretch of pipe but tilted by 45° and against the flow of fluid.

Protect them to prevent water from infiltrating (dripping gates, condensation from pipes etc.) .

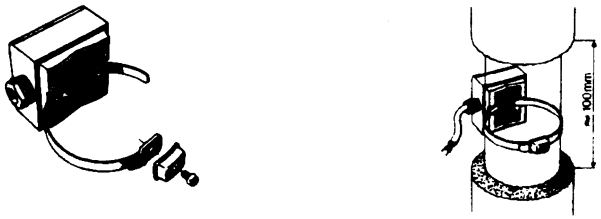

Installing QAD2.. strap-on sensors

Make sure fluid is circulating in the chosen location.

Eliminate insulation and paintwork (including rust inhibitor) on a min. 100mm length of pipe.

Sensors come with straps for pipes up to 100 mm in diameter .

Placing the probes (QAD22.../QAE21.../QAP21.../RCA...)

With pumps on outlet

with 3 ways valves / with 4 ways valves

Panel system / burner control

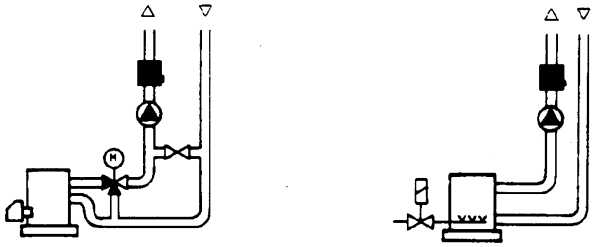

With pumps on return

with 3 ways valves / with 4 ways valves

Strap-on or immersion sensors?

QAD2.. strap-on sensors

Advantages :

- 10 sec. time constant
- Installed with system running (no plumbing work)
- Installation can be changed easily if it proves incorrect

ΠLimits:

- Suitable for pipe diameters max. 100 mm
- Can be affected by currents of air etc.

QAE2... immersion sensors

Advantages:

- Measure "mean" fluid temperature
- No external influence on measurement such as: currents of air, nearby pipes etc.

Limits:

- Time constant with sheath: 20 sec.
- Hard to change installation position if it proves incorrect

Installing differential pressure probes for air

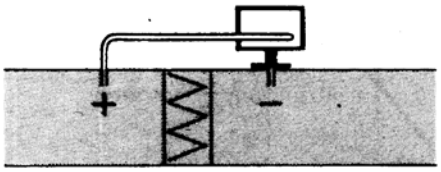

A - Control a filter (clogging)

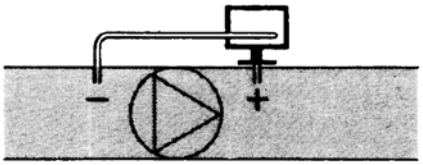

B - Control a fan (upstream/downstream)

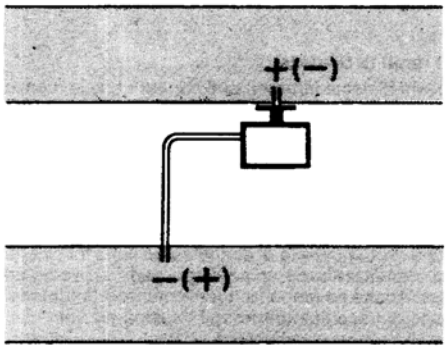

C - Measurement of difference in pressure between two ducts

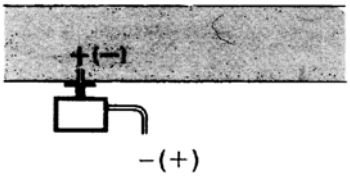

D - Measurement of difference in pressure between two rooms or of inside of duct and outside

Basic principles

Measuring static pressure(i.e. pressure exerted by air on pipe walls)

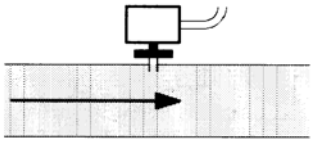

Measuring dinamic pressure

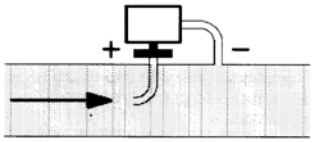

$$Pd = \frac{y\,\vartheta^2}{2g}$$

Legend

y	Kg/m3, specific weight of air
q	m/s, air speed
g	9.81 m/s2 gravity acceleration
Pd	mm C.A., dynamic pressure

Measuring total pressure

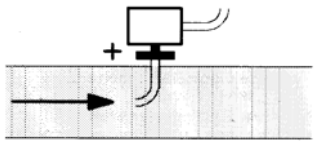

Note: Specifications and data subject to change. Errors and omissions excepted.

VERSIONE MONOSTADIO "TN"
"TN SINGLE-STAGE VERSION

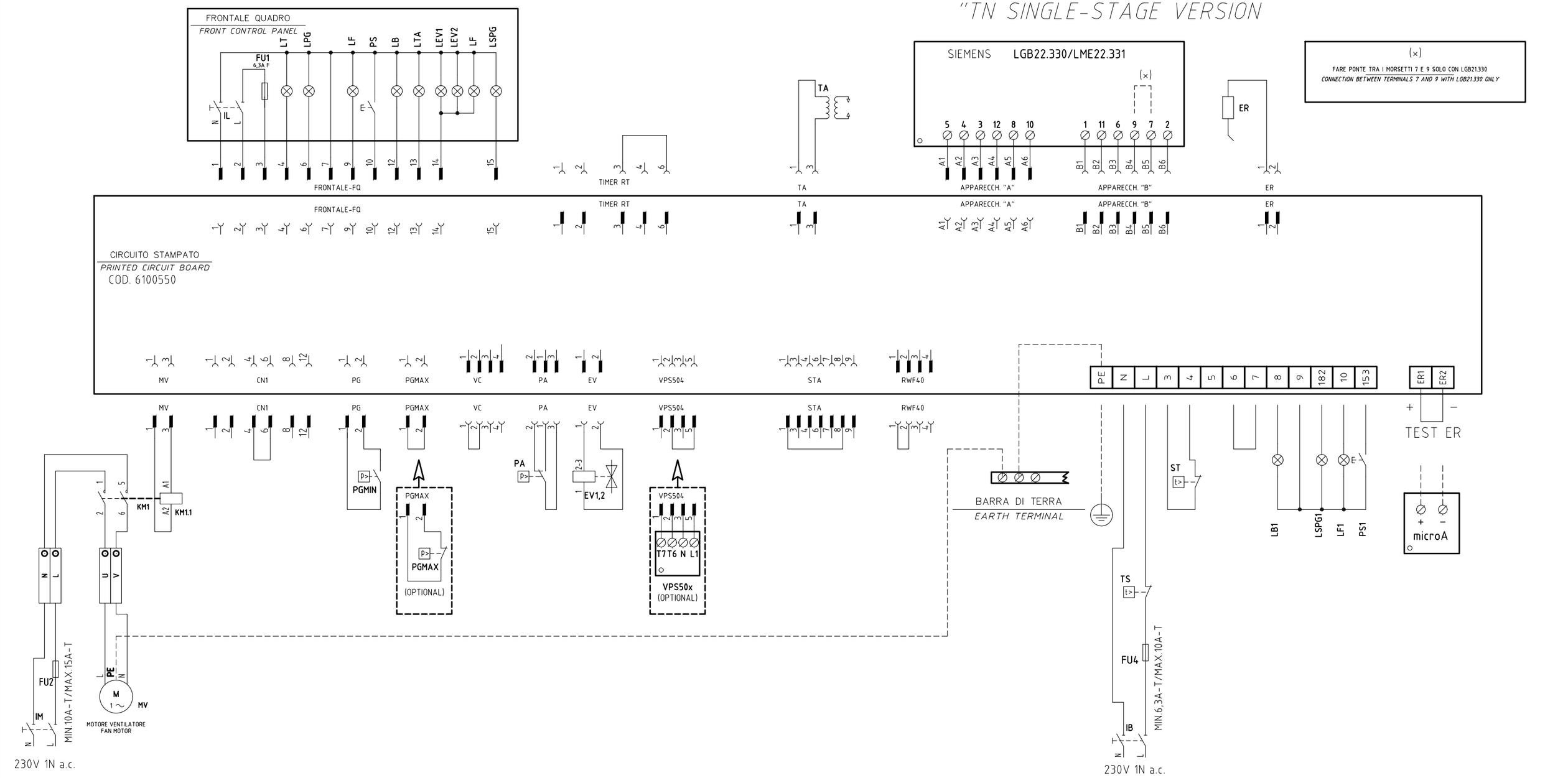

REV.	MODIFICA	DATA	FIRME
02	AGGIORNATO SCHEMA/WIRING UPDATE	23/05/17	U. PINTON
01	AGGIUNTO/ADDED "SQN72,x4A44A20"	05/02/10	U. PINTON

UNIGAS

Impianto: TIPO/TYPE P45 MODELLO x–.TN(AB)(PR)(MD).x.xx.A.xx	Ordine		Data 07/04/2008
	Commessa	Data Controllato 23/05/2017	Revisione 02
Descrizione: VERSIONE "MD" CON RWF5x.xx / 600V / KM3 E SMA+SMF VERSION "MD" WITH RWF5x.xx / 600V / KM3 AND SMA+SMF	Esecutore U. PINTON	Controllato T. BARALDO	Dis. N. 18 – 0152

PREC.	FOGLIO
/	1
SEGUE	TOTALE
2	6

VERSIONE ALTA-BASSA FIAMMA "AB" / PROGRESSIVO "PR"
"AB" HIGH-LOW / "PR" PROGRESSIVE VERSION

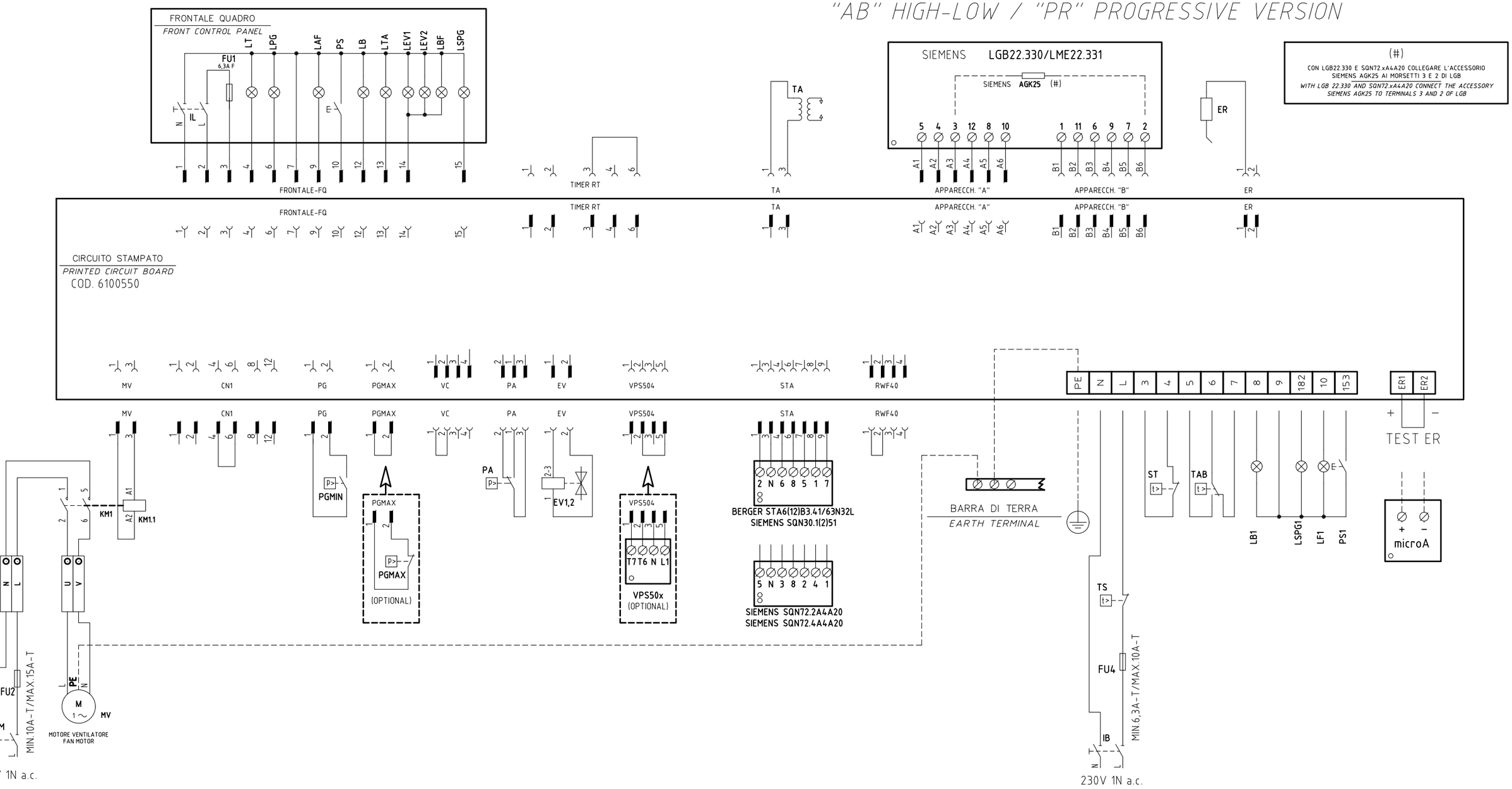

Data 07/04/2008		PREC. 1	FOGLIO 2
Revisione 02			
Dis. N. 18 – 0152		SEGUE 3	TOTALE 6

VERSIONE MODULANTE "MD"
"MD" MODULATING VERSION

FRONTALE QUADRO
FRONT CONTROL PANEL

FU1 6,3A F

LT LPG LAF PS LB TA EV1 EV2 LBF LSPG

IL

FRONTALE-FQ

TIMER RT

TA

SIEMENS LGB22.330/LME22.331

SIEMENS AGK25 (#)

APPARECCH. "A"

APPARECCH. "B"

ER

(#)
CON LGB22.330 E SQN72.xA4A20 COLLEGARE L'ACCESSORIO SIEMENS AGK25 AI MORSETTI 3 E 2 DI LGB
WITH LGB 22.330 AND SQN72.xA4A20 CONNECT THE ACCESSORY SIEMENS AGK25 TO TERMINALS 3 AND 2 OF LGB

CIRCUITO STAMPATO
PRINTED CIRCUIT BOARD
COD. 6100550

MV CN1 PG PGMAX VC PA EV VPS504 STA RWF40

PE N L 3 4 5 6 7 8 9 18.2 10 15.3

ER1 ER2

TEST ER

KM1 KM1.1

PGMIN

PGMAX (OPTIONAL) ОПЦИЯ

PA

EV1,2

VPS504 T7 T6 N L1 VPS50x (OPTIONAL) ОПЦИЯ

BERGER STA6(12)B3.41/63N32L
SIEMENS SQN30.1(2)51

2 N 6 8 5 1 7

5 N 3 8 2 4 1

SIEMENS SQN72.4A4A20

FU2 2A-F

BARRA DI TERRA
EARTH TERMINAL

ST

LB1 LSPG1 LF1 PS1

microA

TS

FU4 MIN.6,3A-T/MAX.10A-T

IB

230V 1N a.c.

N L U V

FU2 MIN.10A-T/MAX.15A-T

IM

M 1~ MV

MOTORE VENTILATORE
FAN MOTOR

230V 1N a.c.

ASCON KM3 HCRMMD
4 1 2 3 7 8 10 9 11-13 12 14

600V RRR0-1-T73 (§)
4 3 2 1 21 22 23 24 19-5 6 20

SIEMENS RWF50.2x
G- G+ 13 12 11 1N 1P L1 N KQ K3 K2

SIEMENS RWF55.5x
13 G- G+ 14 12 11 1N 1P L1 N KQ K3 K2

SMA (2) (3) MAN (1) AUTO

SMF (5) (6) MIN (4) MAX

CAVO 7x0,75mmq
7x0,75mmq CABLE

CONN. SONDE

L1	(1) MARRONE	*BROWN*
N	(2) BLU	*BLUE*
B5	(3) ROSSO	*RED*
T6	(4) NERO	*BLACK*
T7	(5) BIANCO	*WHITE*
T8	(6) ARANCIO	*ORANGE*

(××)
COLLEGAMENTO SONDE
PROBE CONNECTION

(§)
SCHEDA [CPU] VISTA LATO COMPONENTI
CIRCUIT [CPU] COMPONENTS SIDE VIEW
PT100 +VT
PONTICELLO INTERNO PER SELEZIONE SEGNALE MORSETTO 3
INTERNAL BRIDGE FOR TERMINAL 3 SELECTION SIGNAL

Data 07/04/2008		PREC. 2	FOGLIO 3
Revisione 02			
Dis. N. 18 – 0152		SEGUE 4	TOTALE 6

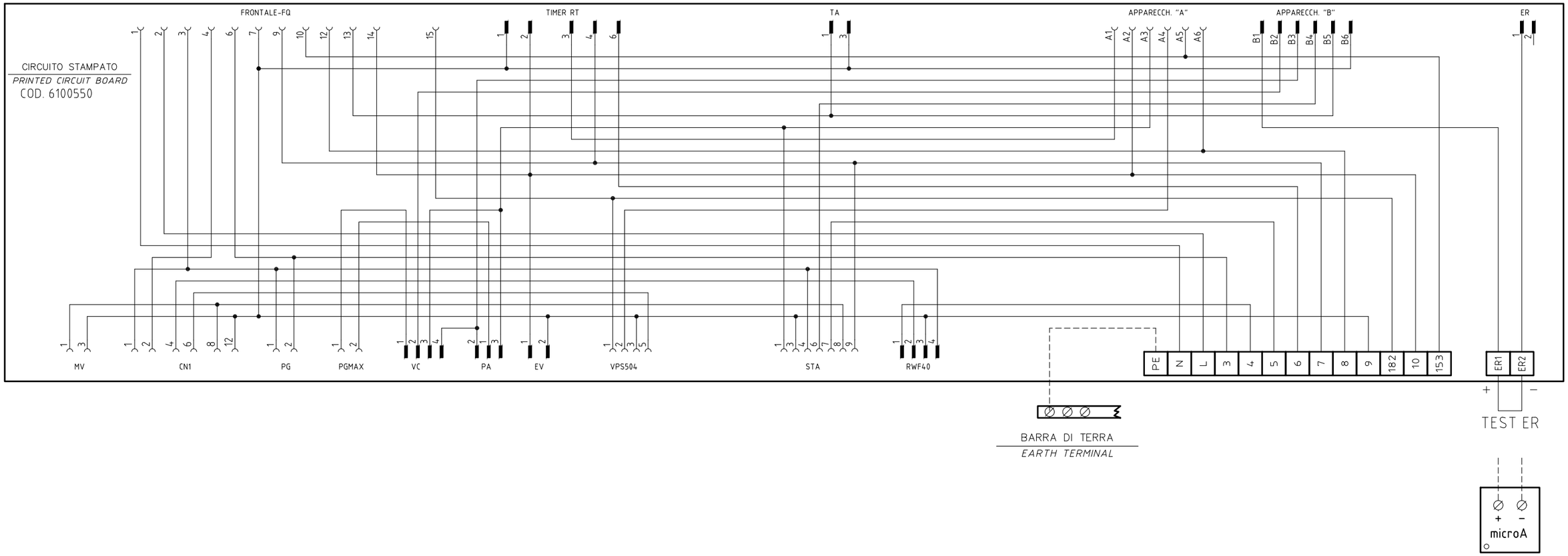

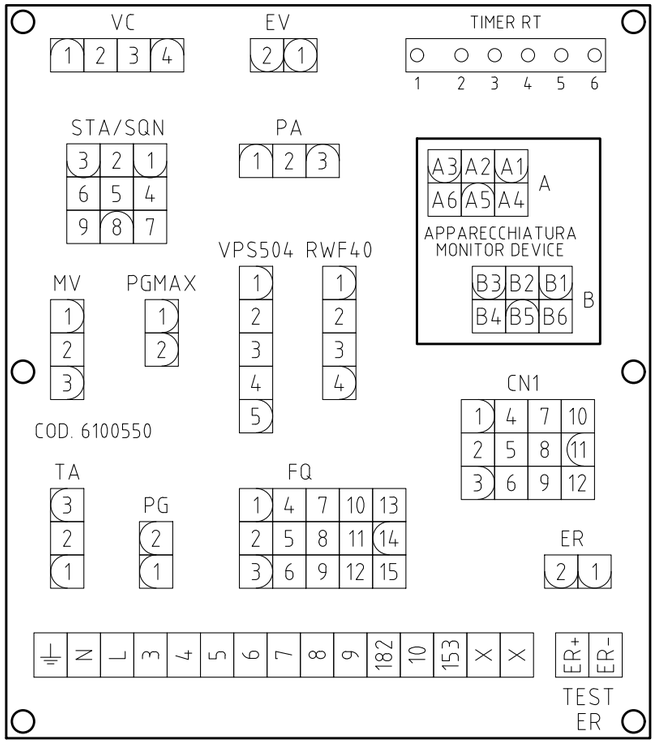

SERVOCOMANDO SERRANDA ARIA
AIR DAMPER ACTUATOR
BERGER STA6(12)B3.41/63N32L

ST2	ALTA FIAMMA *HIGH FLAME*
ST0	SOSTA *STAND-BY*
ST1	BASSA FIAMMA *LOW FLAME*
MV	NON USATA *NOT USED*

SERVOCOMANDO SERRANDA ARIA (ALTERNATIVO)
AIR DAMPER ACTUATOR (ALTERNATIVE)
SIEMENS SQN30.1(2)51A

I	ALTA FIAMMA *HIGH FLAME*
II	SOSTA *STAND-BY*
III	BASSA FIAMMA *LOW FLAME*
V	NON USATA *NOT USED*

SERVOCOMANDO SERRANDA ARIA (ALTERNATIVO)
AIR DAMPER ACTUATOR (ALTERNATIVE)
SIEMENS SQN72.xA4A20

I (ROSSO) *I (RED)*	ALTA FIAMMA *HIGH FLAME*
II (BLU) *II (BLUE)*	SOSTA *STAND-BY*
III (ARANCIO) *III (ORANGE)*	BASSA FIAMMA *LOW FLAME*
IV (NERO) *IV (BLACK)*	NON USATA *NOT USED*

Data 07/04/2008		PREC. 3	FOGLIO 4
Revisione 02			
Dis. N. 18 – 0152		SEGUE 5	TOTALE 6

(××)

ATTENZIONE COLLEGAMENTO SONDE CON CONNETTORE 7 POLI

WARNING PROBE CONNECTION WITH 7 PINS CONNECTOR

KM3 HCRMMD

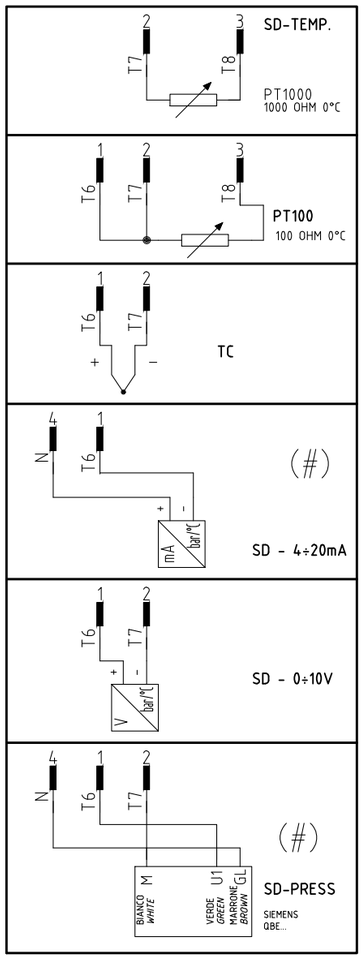

600V RRR0-1-T73

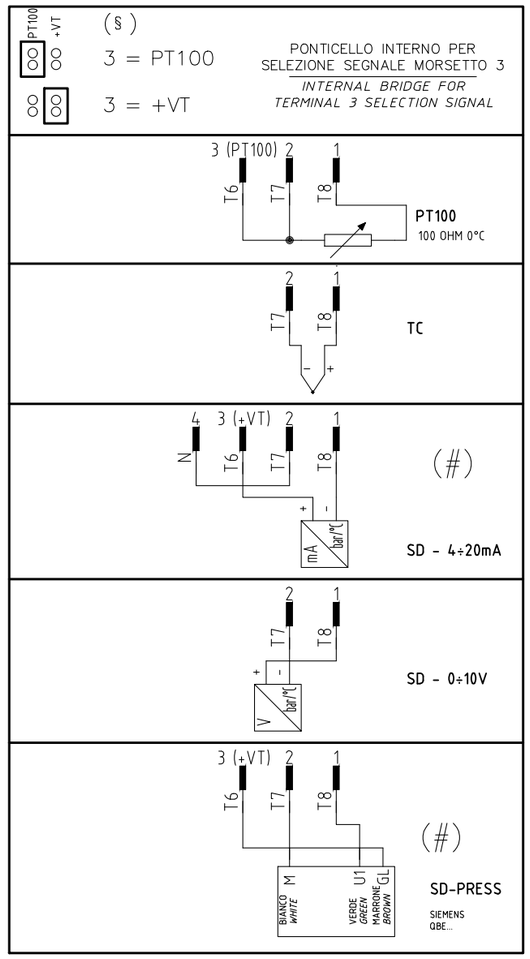

RWF55.5x

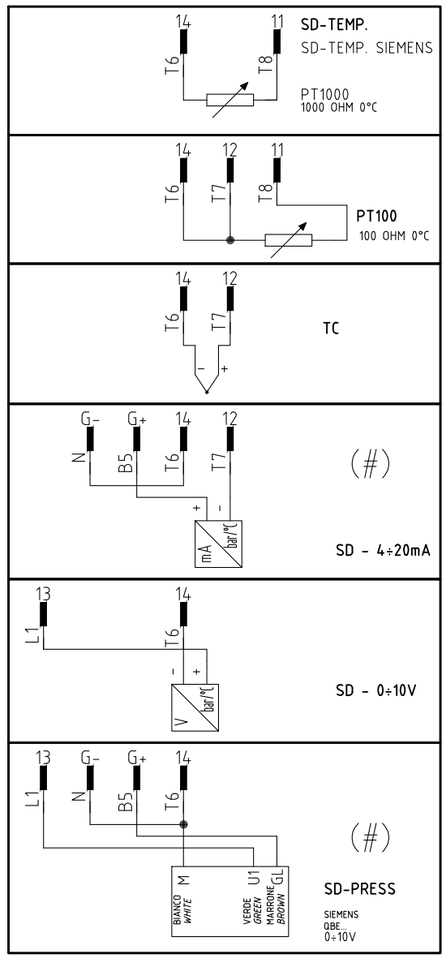

RWF50.2x

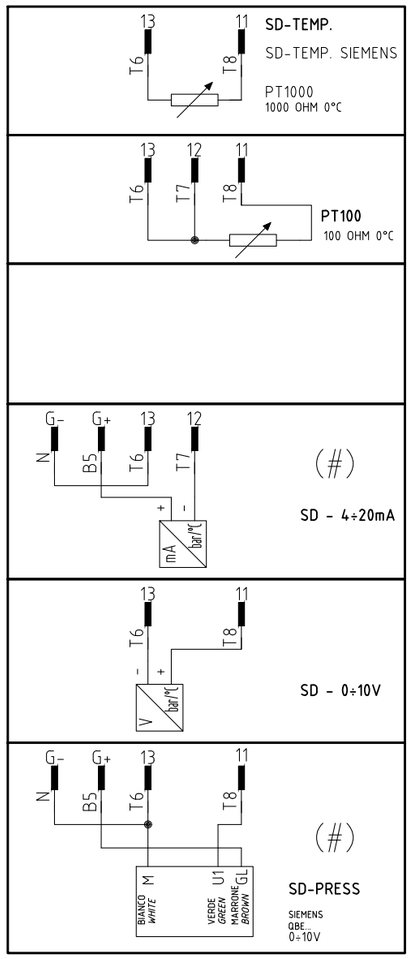

(#)

COLLEGAMENTO SOLO PER
TRASDUTTORI PASSIVI

TRASDUCER PASSIVE
CONNECTION ONLY

Data 07/04/2008		PREC. 4	FOGLIO 5
Revisione 02			
Dis. N. 18 – 0152		SEGUE 6	TOTALE 6

Sigla/Item	Funzione	Function
600V RRR0-1-T73	REGOLATORE MODULANTE (ALTERNATIVO)	BURNER MODULATOR (ALTERNATIVE)
AGK25	CARICO RESISTIVO PTC (SOLO CON LME..)	PTC RESISTIVE LOAD (LME.. ONLY)
BERGER STA6(12)B3.41/63N32L	SERVOCOMANDO SERRANDA ARIA	AIR DAMPER ACTUATOR
ER	ELETTRODO RILEVAZIONE FIAMMA	FLAME DETECTION ELECTRODE
EV1,2	ELETTROVALVOLE GAS (O GRUPPO VALVOLE)	GAS ELECTRO-VALVES (OR VALVES GROUP)
FU1	FUSIBILE DI LINEA	LINE FUSE
FU2	FUSIBILE DI LINEA	LINE FUSE
FU4	FUSIBILE DI LINEA	LINE FUSE
IB	INTERRUTTORE LINEA BRUCIATORE	BURNER LINE SWITCH
IL	INTERRUTTORE LINEA AUSILIARI	AUXILIARY LINE SWITCH
IM	INTERRUTTORE LINEA MOTORE VENTILATORE	FAN MOTOR LINE SWITCH
KM1.1	CONTATTORE MOTORE VENTILATORE	FAN MOTOR CONTACTOR
KM3 HCRMMD	REGOLATORE MODULANTE (ALTERNATIVO)	BURNER MODULATOR (ALTERNATIVE)
LAF	LAMPADA SEGNALAZIONE ALTA FIAMMA BRUCIATORE	BURNER IN HIGH FLAME INDICATOR LIGHT
LB	LAMPADA SEGNALAZIONE BLOCCO BRUCIATORE	INDICATOR LIGHT FOR BURNER LOCK-OUT
LB1	LAMPADA SEGNALAZIONE BLOCCO BRUCIATORE	INDICATOR LIGHT FOR BURNER LOCK-OUT
LBF	LAMPADA SEGNALAZIONE BASSA FIAMMA BRUCIATORE	BURNER IN LOW FLAME INDICATOR LIGHT
LEV1	LAMPADA SEGNALAZIONE APERTURA [EV1]	INDICATOR LIGHT FOR OPENING OF ELECTRO-VALVE [EV1]
LEV2	LAMPADA SEGNALAZIONE APERTURA [EV2]	INDICATOR LIGHT FOR OPENING OF ELECTRO-VALVE [EV2]
LF	LAMPADA SEGNALAZIONE FUNZIONAMENTO BRUCIATORE	BURNER IN HIGH FLAME INDICATOR LIGHT
LF1	LAMPADA SEGNALAZIONE FUNZIONAMENTO BRUCIATORE	INDICATOR LIGHT BURNER OPERATION
LGB22.330/LME22.331	APPARECCHIATURA CONTROLLO FIAMMA	CONTROL BOX
LPG	LAMPADA SEGNALAZIONE PRESENZA GAS IN RETE	INDICATOR LIGHT FOR PRESENCE OF GAS IN THE NETWORK
LSPG	LAMPADA SEGNALAZIONE BLOCCO CONTROLLO TENUTA VALVOLE	INDICATOR LIGHT FOR LEAKAGE OF VALVES
LSPG1	LAMPADA SEGNALAZIONE BLOCCO CONTROLLO TENUTA VALVOLE	INDICATOR LIGHT FOR LEAKAGE OF VALVES
LT	LAMPADA SEGNALAZIONE BLOCCO TERMICO	INDICATOR LIGHT FOR MOTOR OVERLOAD THERMAL CUTOUT
LTA	LAMPADA SEGNALAZIONE TRASFORMATORE DI ACCENSIONE	IGNITION TRANSFORMER INDICATOR LIGHT
MV	MOTORE VENTILATORE	FAN MOTOR
PA	PRESSOSTATO ARIA	AIR PRESSURE SWITCH
PGMAX	PRESSOSTATO GAS DI MASSIMA PRESSIONE	MAXIMUM PRESSURE GAS SWITCH
PGMIN	PRESSOSTATO GAS DI MINIMA PRESSIONE	MINIMUM GAS PRESSURE SWITCH
PS	PULSANTE SBLOCCO FIAMMA	FLAME UNLOCK BUTTON
PS1	PULSANTE SBLOCCO FIAMMA	FLAME UNLOCK BUTTON
PT100	SONDA DI TEMPERATURA	TEMPERATURE PROBE
RWF50.2x	REGOLATORE MODULANTE (ALTERNATIVO)	BURNER MODULATOR (ALTERNATIVE)
RWF55.5x	REGOLATORE MODULANTE (ALTERNATIVO)	BURNER MODULATOR (ALTERNATIVE)
SD-PRESS	SONDA DI PRESSIONE	PRESSURE PROBE
SD-TEMP.	SONDA DI TEMPERATURA	TEMPERATURE PROBE
SD - 0÷10V	TRASDUTTORE USCITA IN TENSIONE	TRANSDUCER VOLTAGE OUTPUT
SD - 4÷20mA	TRASDUTTORE USCITA IN CORRENTE	TRANSDUCER CURRENT OUTPUT
SIEMENS SQN30.1(2)51	SERVOCOMANDO SERRANDA ARIA (ALTERNATIVO)	AIR DAMPER ACTUATOR (ALTERNATIVE)
SIEMENS SQN72.2A4A20	SERVOCOMANDO SERRANDA ARIA (ALTERNATIVO)	AIR DAMPER ACTUATOR (ALTERNATIVE)
SIEMENS SQN72.4A4A20	SERVOCOMANDO SERRANDA ARIA (ALTERNATIVO)	AIR DAMPER ACTUATOR (ALTERNATIVE)
SMA	SELETTORE MANUALE/AUTOMATICO	MANUAL/AUTOMATIC SWITCH
SMF	SELETTORE MANUALE FUNZIONAMENTO MIN-0-MAX	MIN-0-MAX MANUAL OPERATION SWITCH
ST	SERIE TERMOSTATI/PRESSOSTATI	SERIES OF THERMOSTATS OR PRESSURE SWITCHES
TA	TRASFORMATORE DI ACCENSIONE	IGNITION TRANSFORMER
TAB	TERMOSTATO/PRESSOSTATO ALTA-BASSA FIAMMA	HIGH-LOW THERMOSTAT/PRESSURE SWITCHES
TC	TERMOCOPPIA	THERMOCOUPLE
TS	TERMOSTATO/PRESSOSTATO DI SICUREZZA	SAFETY THERMOSTAT OR PRESSURE SWITCH
VPS50x	CONTROLLO DI TENUTA VALVOLE GAS (OPTIONAL)	GAS PROVING SYSTEM (OPTIONAL)
microA	MICROAMPEROMETRO	MICROAMMETER

Data 07/04/2008		PREC. 5	FOGLIO 6
Revisione 02			
Dis. N. 18 – 0152		SEGUE /	TOTALE 6