P20
P30
P45
P50
P65

Gas burners

MANUAL OF INSTALLATION - USE - MAINTENANCE

CIB UNIGAS

BURNERS - BRUCIATORI - BRULERS - BRENNER - QUEMADORES - ГОРЕЛКИ

M03975CF Rev. 0,0 12/21

DANGERS, WARNINGS AND NOTES OF CAUTION

THIS MANUAL IS SUPPLIED AS AN INTEGRAL AND ESSENTIAL PART OF THE PRODUCT AND MUST BE DELIVERED TO THE USER.

INFORMATION INCLUDED IN THIS SECTION ARE DEDICATED BOTH TO THE USER AND TO PERSONNEL FOLLOWING PRODUCT INSTALLATION AND MAINTENANCE.

THE USER WILL FIND FURTHER INFORMATION ABOUT OPERATING AND USE RESTRICTIONS, IN THE SECOND SECTION OF THIS MANUAL. WE HIGHLY RECOMMEND TO READ IT.

CAREFULLY KEEP THIS MANUAL FOR FUTURE REFERENCE.

1) GENERAL INTRODUCTION

- The equipment must be installed in compliance with the regulations in force, following the manufacturer's instructions, by qualified personnel.
- Qualified personnel means those having technical knowledge in the field of components for civil or industrial heating systems, sanitary hot water generation and particularly service centres authorised by the manufacturer.
- Improper installation may cause injury to people and animals, or damage to property, for which the manufacturer cannot be held liable.
- Remove all packaging material and inspect the equipment for integrity.

In case of any doubt, do not use the unit - contact the supplier.

The packaging materials (wooden crate, nails, fastening devices, plastic bags, foamed polystyrene, etc), should not be left within the reach of children, as they may prove harmful.

- Before any cleaning or servicing operation, disconnect the unit from the mains by turning the master switch OFF, and/or through the cut-out devices that are provided.
- Make sure that inlet or exhaust grilles are unobstructed.
- In case of breakdown and/or defective unit operation, disconnect the unit. Make no attempt to repair the unit or take any direct action.

Contact qualified personnel only.

Units shall be repaired exclusively by a servicing centre, duly authorised by the manufacturer, with original spare parts and accessories.

Failure to comply with the above instructions is likely to impair the unit's safety.

To ensure equipment efficiency and proper operation, it is essential that maintenance operations are performed by qualified personnel at regular intervals, following the manufacturer's instructions.

- When a decision is made to discontinue the use of the equipment, those parts likely to constitute sources of danger shall be made harmless.
- In case the equipment is to be sold or transferred to another user, or in case the original user should move and leave the unit behind, make sure that these instructions accompany the equipment at all times so that they can be consulted by the new owner and/or the installer.
- This unit shall be employed exclusively for the use for which it is meant. Any other use shall be considered as improper and, therefore, dangerous.

The manufacturer shall not be held liable, by agreement or otherwise, for damages resulting from improper installation, use and failure to comply with the instructions supplied by the manufacturer.The occurrence of any of the following circustances may cause explosions, polluting unburnt gases (example: carbon monoxide CO), burns, serious harm to people, animals and things:

- Failure to comply with one of the WARNINGS in this chapter
- Incorrect handling, installation, adjustment or maintenance of the burner
- Incorrect use of the burner or incorrect use of its parts or optional supply

2) SPECIAL INSTRUCTIONS FOR BURNERS

- The burner should be installed in a suitable room, with ventilation openings complying with the requirements of the regulations in force, and sufficient for good combustion.
- Only burners designed according to the regulations in force should be used.
- This burner should be employed exclusively for the use for which it was designed.
- Before connecting the burner, make sure that the unit rating is the same as delivery mains (electricity, gas oil, or other fuel).
- Observe caution with hot burner components. These are, usually, near to the flame and the fuel pre-heating system, they become hot during the unit operation and will remain hot for some time after the burner has stopped.

When the decision is made to discontinue the use of the burner, the user shall have qualified personnel carry out the following operations:

a Remove the power supply by disconnecting the power cord from the mains.

b Disconnect the fuel supply by means of the hand-operated shut-off valve and remove the control handwheels from their spindles.

Special warnings

- Make sure that the burner has, on installation, been firmly secured to the appliance, so that the flame is generated inside the appliance fire-box.
- Before the burner is started and, thereafter, at least once a year, have qualified personnel perform the following operations:

a set the burner fuel flow rate depending on the heat input of the appliance;

b set the flow rate of the combustion-supporting air to obtain a combustion efficiency level at least equal to the lower level required by the regulations in force;

c check the unit operation for proper combustion, to avoid any harmful or polluting unburnt gases in excess of the limits permitted by the regulations in force;

d make sure that control and safety devices are operating properly;

e make sure that exhaust ducts intended to discharge the products of combustion are operating properly;

f on completion of setting and adjustment operations, make sure that all mechanical locking devices of controls have been duly tightened;

g make sure that a copy of the burner use and maintenance instructions is available in the boiler room.

- In case of a burner shut-down, reser the control box by means of the RESET pushbutton. If a second shut-down takes place, call the Technical Service, **without trying to RESET further**.
- The unit shall be operated and serviced by qualified personnel only, in compliance with the regulations in force.

3) GENERAL INSTRUCTIONS DEPENDING ON FUEL USED

3a) ELECTRICAL CONNECTION

- For safety reasons the unit must be efficiently earthed and installed as required by current safety regulations.
- It is vital that all saftey requirements are met. In case of any doubt, ask for an accurate inspection of electrics by qualified personnel, since the manufacturer cannot be held liable for damages that may be caused by failure to correctly earth the equipment.
- Qualified personnel must inspect the system to make sure that it is adequate to take the maximum power used by the equipment shown on the equipment rating plate. In particular, make sure that the system cable cross section is adequate for the power absorbed by the unit.
- No adaptors, multiple outlet sockets and/or extension cables are permitted to connect the unit to the electric mains.
- An omnipolar switch shall be provided for connection to mains, as required by the current safety regulations.
- The use of any power-operated component implies observance of a few basic rules, for example:
  - do not touch the unit with wet or damp parts of the body and/or with bare feet;
  - do not pull electric cables;
  - do not leave the equipment exposed to weather (rain, sun, etc.) unless expressly required to do so;
  - do not allow children or inexperienced persons to use equipment;
- The unit input cable shall not be replaced by the user.
  In case of damage to the cable, switch off the unit and contact qualified personnel to replace.
  When the unit is out of use for some time the electric switch supplying all the power-driven components in the system (i.e. pumps, burner, etc.) should be switched off.

3b) FIRING WITH GAS, LIGHT OIL OR OTHER FUELS

GENERAL

- The burner shall be installed by qualified personnel and in compliance with regulations and provisions in force; wrong installation can cause injuries to people and animals, or damage to property, for which the manufacturer cannot be held liable.
- Before installation, it is recommended that all the fuel supply system pipes be carefully cleaned inside, to remove foreign matter that might impair the burner operation.
- Before the burner is commissioned, qualified personnel should inspect the following:

a the fuel supply system, for proper sealing;
b the fuel flow rate, to make sure that it has been set based on the firing rate required of the burner;
c the burner firing system, to make sure that it is supplied for the designed fuel type;
d the fuel supply pressure, to make sure that it is included in the range shown on the rating plate;
e the fuel supply system, to make sure that the system dimensions are adequate to the burner firing rate, and that the system is equipped with all the safety and control devices required by the regulations in force.

- When the burner is to remain idle for some time, the fuel supply tap or taps should be closed.

SPECIAL INSTRUCTIONS FOR USING GAS

Have qualified personnel inspect the installation to ensure that:

a the gas delivery line and train are in compliance with the regulations and provisions in force;
b all gas connections are tight;
c the boiler room ventilation openings are such that they ensure the air supply flow required by the current regulations, and in any case are sufficient for proper combustion.

- Do not use gas pipes to earth electrical equipment.
- Never leave the burner connected when not in use. Always shut the gas valve off.
- In case of prolonged absence of the user, the main gas delivery valve to the burner should be shut off.

Precautions if you can smell gas

a do not operate electric switches, the telephone, or any other item likely to generate sparks;
b immediately open doors and windows to create an air flow to purge the room;
c close the gas valves;
d contact qualified personnel.

- Do not obstruct the ventilation openings of the room where gas appliances are installed, to avoid dangerous conditions such as the development of toxic or explosive mixtures.

DIRECTIVES AND STANDARDS

Gas burners

European directives

-Regulation 2016/426/UE (appliances burning gaseous fuels)
-2014/35/UE (Low Tension Directive)
-2014/30/UE (Electromagnetic compatibility Directive)
-2006/42/EC (Machinery Directive)

Harmonized standards

-UNI EN 676 (Automatic forced draught burners for gaseous fuels)
-EN 55014-1 (Electromagnetic compatibility- Requirements for house hold appliances, electric tools and similar apparatus)
-EN 60204-1:2006 (Safety of machinery – Electrical equipment of machines.)
-CEI EN 60335-1 (Specification for safety of household and similar electrical appliances);
-CEI EN 60335-2-102 (Household and similar electrical appliances. Safety. Particular requirements for gas, oil and solid-fuel burning appliances having electrical connections).
-UNI EN ISO 12100:2010 (Safety of machinery - General principles for design - Risk assessment and risk reduction);

Light oil burners

European directives

-2014/35/UE (Low Tension Directive)
-2014/30/UE (Electromagnetic compatibility Directive)
-2006/42/EC (Machinery Directive)

Harmonized standards

-UNI EN 267-2011(Automatic forced draught burners for liquid fuels)
-EN 55014-1 (Electromagnetic compatibility- Requirements for house hold appliances, electric tools and similar apparatus)
-EN 60204-1:2006 (Safety of machinery – Electrical equipment of machines.)
-CEI EN 60335-1 (Specification for safety of household and similar electrical appliances);
-CEI EN 60335-2-102 (Household and similar electrical appliances. Safety. Particular requirements for gas, oil and solid-fuel burning appliances having electrical connections).
-UNI EN ISO 12100:2010 (Safety of machinery - General principles for design - Risk assessment and risk reduction);

Heavy oil burners

European Directives

-2014/35/UE (Low Tension Directive)
-2014/30/UE (Electromagnetic compatibility Directive)
-2006/42/EC (Machinery Directive)

Harmonized standards

-UNI EN 267(Automatic forced draught burners for liquid fuels)
-EN 55014-1 (Electromagnetic compatibility- Requirements for house hold appliances, electric tools and similar apparatus)
-EN 60204-1:2006 (Safety of machinery – Electrical equipment of machines.)
-CEI EN 60335-1 (Specification for safety of household and similar electrical appliances);
-CEI EN 60335-2-102 (Household and similar electrical appliances. Safety. Particular requirements for gas, oil and solid-fuel burning appliances having electrical connections).
-UNI EN ISO 12100:2010 (Safety of machinery - General principles for design - Risk assessment and risk reduction);

Gas - Light oil burners

European Directives

-Regulation 2016/426/UE (appliances burning gaseous fuels)
-2014/35/UE (Low Tension Directive)
-2014/30/UE (Electromagnetic compatibility Directive)
-2006/42/EC (Machinery Directive)

Harmonized standards

-UNI EN 676 (Automatic forced draught burners for gaseous fuels)
-UNI EN 267(Automatic forced draught burners for liquid fuels)
-EN 55014-1 (Electromagnetic compatibility- Requirements for house hold appliances, electric tools and similar apparatus)
-EN 60204-1:2006 (Safety of machinery – Electrical equipment of machines.)
-CEI EN 60335-1 (Specification for safety of household and similar electrical appliances);
-CEI EN 60335-2-102 (Household and similar electrical appliances. Safety. Particular requirements for gas, oil and solid-fuel burning appliances having electrical connections).
-UNI EN ISO 12100:2010 (Safety of machinery - General principles for design - Risk assessment and risk reduction);

Gas - Heavy oil burners

European directives:

-Regulation 2016/426/UE (appliances burning gaseous fuels)
-2014/35/UE (Low Tension Directive)
-2014/30/UE (Electromagnetic compatibility Directive)
-2006/42/EC (Machinery Directive)

Harmonized standards

-UNI EN 676 (Automatic forced draught burners for gaseous fuels)
-EN 55014-1 (Electromagnetic compatibility- Requirements for house hold appliances, electric tools and similar apparatus)
-EN 60204-1:2006 (Safety of machinery – Electrical equipment of machines.)
-CEI EN 60335-1 (Specification for safety of household and similar electrical appliances);
-CEI EN 60335-2-102 (Household and similar electrical appliances. Safety. Particular requirements for gas, oil and solid-fuel burning appliances having electrical connections).
-UNI EN ISO 12100:2010 (Safety of machinery - General principles for design - Risk assessment and risk reduction);

Industrial burners

European directives

-Regulation 2016/426/UE (appliances burning gaseous fuels)
-2014/35/UE (Low Tension Directive)
-2014/30/UE (Electromagnetic compatibility Directive)
-2006/42/EC (Machinery Directive)

Harmonized standards

-EN 55014-1 (Electromagnetic compatibility- Requirements for house hold appliances, electric tools and similar apparatus)
-EN 746-2 (Industrial thermoprocessing equipment - Part 2: Safety requirements for combustion and fuel handling systems)
-UNI EN ISO 12100:2010 (Safety of machinery - General principles for design - Risk assessment and risk reduction);
-EN 60204-1:2006 (Safety of machinery – Electrical equipment of machines.)
-EN 60335-2 (Electrical equipment of non-electric appliances for household and similar purposes. Safety requirements)

Burner data plate

For the following information, please refer to the data plate:

- burner type and burner model: must be reported in any communication with the supplier
- burner ID (serial number): must be reported in any communication with the supplier
- date of production (year and month)
- information about fuel type and network pressure

Type	--
Model	--
Year	--
S.Number	--
Output	--
Oil Flow	--
Fuel	--
Category	--
Gas Pressure	--
Viscosity	--
El.Supply	--
El.Consump.	--
Fan Motor	--
Protection	--
Drwaing n°	--
P.I.N.	--

SYMBOLS USED

WARNING! Failure to observe the warning may result in irreparable damage to the unit or damage to the environment

DANGER! Failure to observe the warning may result in serious injuries or death.

WARNING! Failure to observe the warning may result in electric shock with lethal consequences

Figures, illustrations and images used in this manual may differ in appearance from the actual product.

BURNER SAFETY

The burners - and the configurations described below - comply with the regulations in force regarding health, safety and the environment. For more in-depth information, refer to the declarations of conformity that are an integral part of this Manual.

DANGER! Incorrect motor rotation can seriously damage property and injure people.

Residual risks deriving from misuse and prohibitions

The burner has been built in order to make its operation safe; there are, however, residual risks.

Do not touch any mechanical moving parts with your hands or any other part of your body. Injury hazard
Do not touch any parts containing fuel (i.e. tank and pipes). Scalding hazard
Do not use the burner in situations other than the ones provided for in the data plate.
Do not use fuels other than the ones stated.
Do not use the burner in potentially explosive environments.
Do not remove or by-pass any machine safety devices.
Do not remove any protection devices or open the burner or any other component while the burner is running.
Do not disconnect any part of the burner or its components while the burner is running.
Untrained staff must not modify any linkages.

After any maintenance, it is important to restore the protection devices before restarting the machine.
All safety devices must be kept in perfect working order.
Personnel authorized to maintain the machine must always be provided with suitable protections.

ATTENTION: while running, the parts of the burner near the generator (coupling flange) are subject to overheating. Where necessary, avoid any contact risks by wearing suitable PPE.

TECHNICAL DATA
SINGLE STAGE BURNERS

BURNERS TYPE/MODEL		P20 M-....25	P20 M-....40	P30 M-....40	P45 M-....40
Input	min. kW	80	80	150	240
	max. kW	230	280	350	520
	min. kcal/h	68.800	68.800	129.000	206.400
	max. kcal/h	197.800	240.800	301.000	447.200
Fuel		Natural gas	Natural gas	Natural gas	Natural gas
Category		I_{2h}	I_{2h}	I_{2h}	I_{2h}
Gas flow rate min.- max.	(Stm^3/h)	8.5 - 24.3	8.5 - 29.6	15.9 - 37	25.4 - 55
Gas pressure min.*	mbar	***	***	***	***
Gas pressure max.	mbar	200	200	200	200
Power supply		230V 3~ - 50Hz	230V 3~ - 50Hz	230V 3~ - 50Hz	230V 3~ - 50Hz
Power consumption	W	650	650	650	900
Electric motor (2800 rpm)	W	370	370	370	620
Protection		IP40	IP40	IP40	IP40
Weight	Kg	30	30	30	58
Gas train size		1”	1”$_{1/2}$	1”$_{1/2}$	1”$_{1/2}$
Gas connections		Rp 1	Rp 1$_{1/4}$	Rp 1$_{1/4}$	Rp 1$_{1/2}$
Operation		single stage	single stage	single stage	single stage
Destination country		*	*	*	*

BURNERS TYPE/MODEL		P45 M-....50	P50 M-....40	P50 M-....50	P50 M-....65
Input	min. kW	240	350	350	350
	max. kW	520	523	860	860
	min. kcal/h	206.400	301.000	301.000	301.000
	max. kcal/h	447.200	449.700	739.600	739.600
Fuel		Natural gas	Natural gas	Natural gas	Natural gas
Category		I_{2h}	I_{2h}	I_{2h}	I_{2h}
Gas flow rate min.- max.	(Stm^3/h)	25.4 - 55	37 - 55	37 - 91	37 - 91
Gas pressure min.*	mbar	***	***	***	***
Gas pressure max.	mbar	200	200	200	500
Power supply		230V 3~ - 50Hz	230V 3~ / 400V 3N ~ 50Hz	230V 3~ / 400V 3N ~ 50Hz	230V 3~ / 400V 3N ~ 50Hz
Power consumption	W	900	1.600	1.600	1.600
Electric motor (2800 rpm)	W	620	1.100	1.100	1.100
Protection		IP40	IP40	IP40	IP40
Weight	Kg	58	58	58	65
Gas train size		2”	1”$_{1/2}$	2”	2”$_{1/2}$
Gas connections		Rp 2	Rp 1$_{1/2}$	Rp 2	DN 65
Operation		single stage	single stage	single stage	single stage
Destination country		*	*	*	*

Note: all gas flow rates (Stm^3/h) are referred to standard gas conditions: 1013 mbar pressure, 15 °C temperature.

Flow rates are referred to G20 natural gas (nett calorific value: 34.02 MJ/Stm^3), if G25 is used (n.c.v.: 29.25 MJ/Stm^3), flow rates must be multiplied by 1.16 factor.

* Minimum pressure to get the maximum rate with any value of back pressure in combustion chamber. The burner operates correctly also with lower pressures but these must guarantee the needed rate.

*** See “NETWORK PRESSURE - RATE CURVES” on page 10

DOUBLE STAGE, PROGRESSIVE AND FULLY MODULATING BURNERS

BURNERS TYPE/MODEL		P20 M-....25	P20 M-....40	P30 M-....40	P45 M-....40
Input	min. low flame kW	85	85	65	145
	min. high flame kW	120	120	100	220
	max. kW	230	280	350	520
	min. low flame kcal/h	73.100	73.100	55.900	124.700
	min. high flame kcal/h	103.200	103.200	86.000	189.200
	max. kcal/h	197.800	240.800	301.000	447.200
Fuel		Natural gas	Natural gas	Natural gas	Natural gas
Category		I_{2h}	I_{2h}	I_{2h}	I_{2h}
Gas flow rate min.- max.	(Stm^3/h)	9 - 24.3	9 - 29.6	6.9 - 37	15.3 - 55
Gas pressure min.*	mbar	***	***	***	***
Gas pressure max.	mbar	200	200	200	200
Power supply		230V 3~ 50Hz	230V 3~ 50Hz	230V 3~ 50Hz	230V 3~ 50Hz
Power consumption	W	650	650	650	900
Electric motor (2800 rpm)	W	370	370	370	620
Protection		IP40	IP40	IP40	IP40
Weight	Kg	30	30	30	58
Gas train size		1”	1”$_{1/2}$	1”$_{1/2}$	1”$_{1/2}$
Gas connections		Rp 1	Rp 1$_{1/4}$	Rp 1$_{1/4}$	Rp 1$_{1/2}$
Operation		double stage progressive fully modulating	double stage progressive fully modulating	double stage progressive fully modulating	double stage progressive fully modulating
Destination country		*	*	*	*

BURNERS TYPE/MODEL		P45 M-....50	P65 M-....50	P65 M-....65
Input	min. low flame kW	145	270	270
	min. high flame kW	220	480	480
	max. kW	520	970	970
	min. low flame kcal/h	124.700	232.200	232.200
	min. high flame kcal/h	189.200	412.800	412.800
	max. kcal/h	447.200	834.200	834.200
Fuel		Natural gas	Natural gas	Natural gas
Category		I_{2h}	I_{2h}	I_{2h}
Gas flow rate min.- max.	(Stm^3/h)	15.3 - 55	28.6 - 103	28.6 - 103
Gas pressure min.*	mbar	***	***	***
Gas pressure max.	mbar	200	200	500
Power supply		230V 3~ / 400V 3N ~ 50Hz	230V 3~ / 400V 3N ~ 50Hz	230V 3~ / 400V 3N ~ 50Hz
Power consumption	W	900	2000	2000
Electric motor (2800 rpm)	W	620	1500	1500
Protection		IP40	IP40	IP40
Weight	Kg	58	150	155
Gas train size		2”	2”	2”$_{1/2}$
Gas connections		Rp 2	Rp 2	DN 65
Operation		double stage progressive fully modulating	double stage progressive fully modulating	double stage progressive fully modulating
Destination country		*	*	*

Note: all gas flow rates (Stm^3/h) are referred to standard gas conditions: 1013 mbar pressure, 15 °C temperature.

Flow rates are referred to G20 natural gas (nett calorific value: 34.02 MJ/Stm^3), if G25 is used (n.c.v.: 29.25 MJ/Stm^3), flow rates must be multiplied by 1.16 factor.

* Minimum pressure to get the maximum rate with any value of back pressure in combustion chamber. The burner operates correctly also with lower pressures but these must guarantee the needed rate.

*** See “NETWORK PRESSURE - RATE CURVES” on page 10

BURNER MODEL IDENTIFICATION

Burners are identified by burner type and model. Burner model identification is described as follow.

Type: **P20**	Model:	**M-.**	**AB.**	**S.**	***.**	**A.**	**0.**	**40**
(1)		(2)	(3)	(4)	(5)	(6)	(7)	(8)

(1)	BURNER TYPE		
(2)	FUEL		M - Natural gas
(3)	OPERATION	Available versions	TN - Single stage
			AB - Double stage
			PR - Progressive
			MD - Fully modulating
(4)	BLAST TUBE LENGHT	(see overall dimensions)	
		Available versions	S - Standard
			L - Long
(5)	DESTINATION COUNTRY		* - see data plate
(6)	SPECIAL VERSION		A - Standard
(7)	BURNER EQUIPMENT	Available versions	0 - 2 Valves
			1 - 2 Valves + leakage control (optional if burner input < 1200 kW)
(8)	GAS TRAIN SIZE	(See Technical data)	
		25= Rp1	40 = Rp1 1/2
		50 = Rp2	65 = DN65

OVERALL DIMENSIONS IN mm

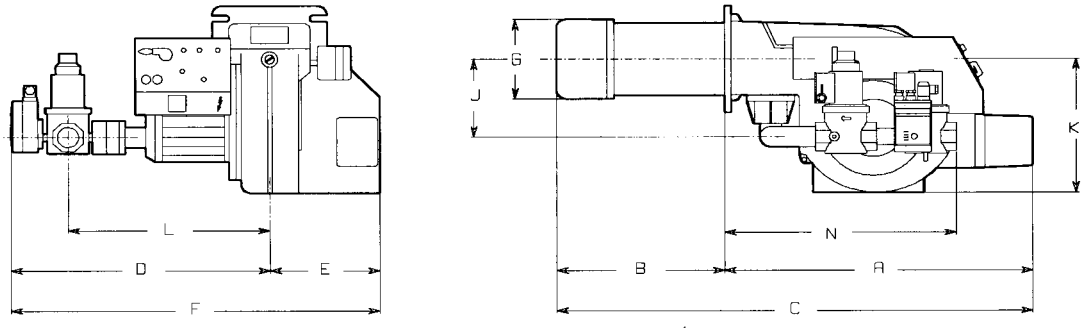

Fig. 4a

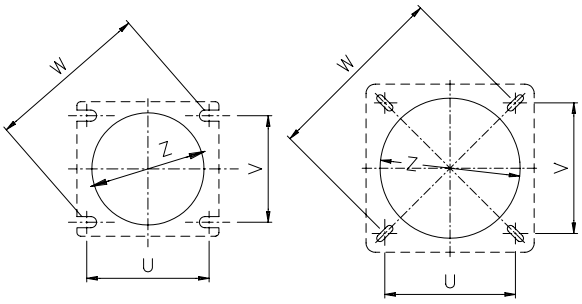

	U	V	W	Z
P20	155	155	220	160
P30	155	155	220	160
P45	215	190	287	200
P50	215	190	287	200
P65	233	233	330	250

Fig. 4b - Boiler plate drilling template - Make 4 M10 threaded holes

	A	B	BL	C	CL	D	E	F	G	K	J	L	N
P20	555	210	295	765	850	510	200	710	126	290	178	360	370
P30	555	230	330	785	885	510	200	710	148	290	178	360	370
P45	660	255	355	915	1015	640	250	890	148	350	210	460	450
P50	620	345	435	965	1055	640	250	890	184	350	210	460	450
P65	825	325	415	1150	1240	750	350	1060	184	375	230	460	450

BL - Long blast tube

PERFORMANCE CURVES

P20 M-.TN...25

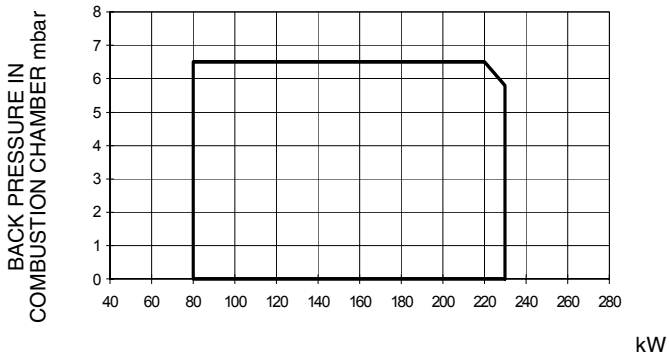

P30 M-.TN..40

Fig. 5

P20 M-.AB...25 - M-.PR...25 - M-.MD...25

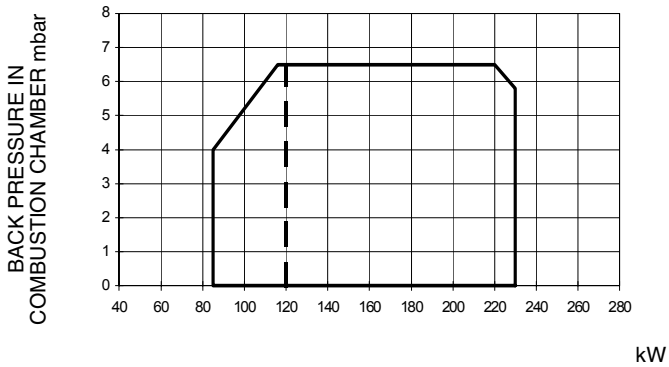

P30 M-.AB...40 - M-.MD...40 - M-.PR...40

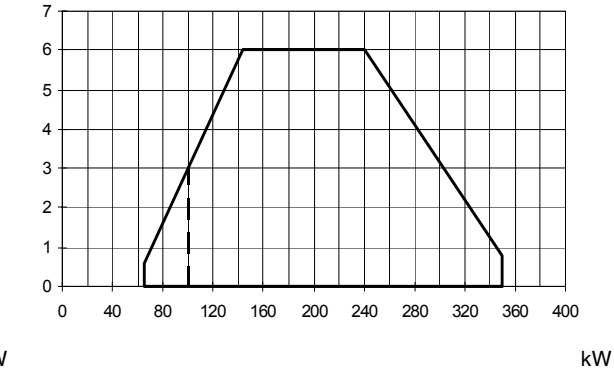

Fig. 6

P20 M-.TN...40

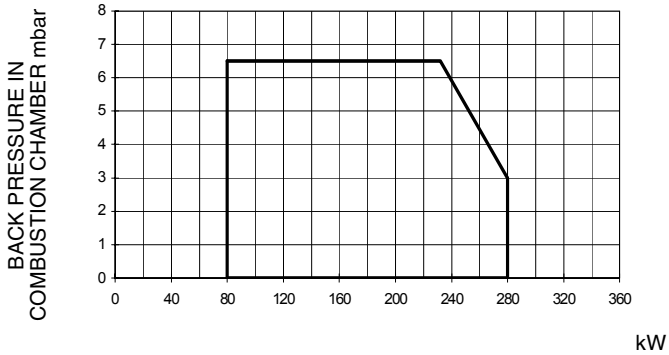

P45 M-.TN...xx

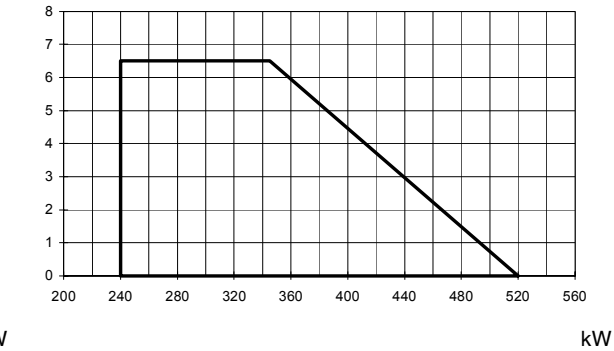

Fig. 7

P20 M-.AB...40 - M-.PR...40 - M-.MD...40

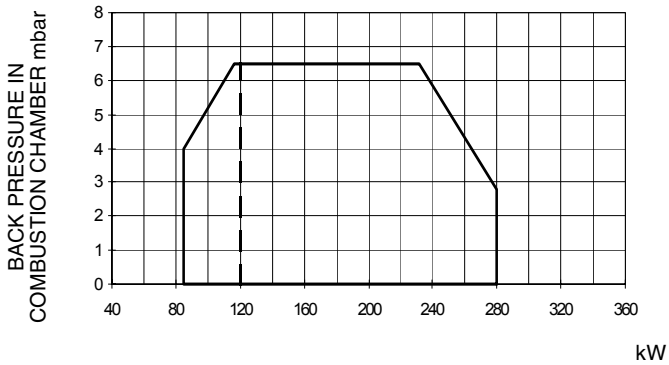

P45 M-.AB...xx - M-.PR...xx - M-.MD...xx

Fig. 8

------ Minimum high flame

To get the input in kcal/h, multiply value in kW by 860.

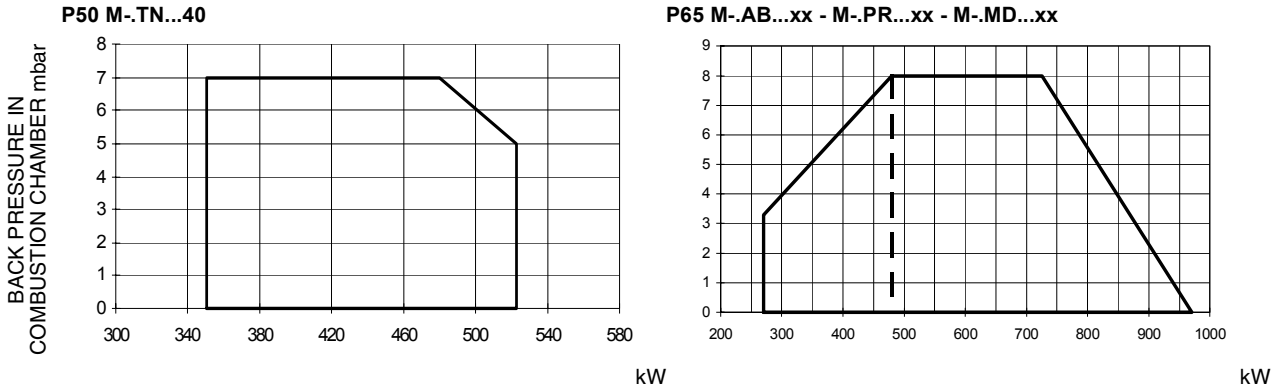

Fig. 9

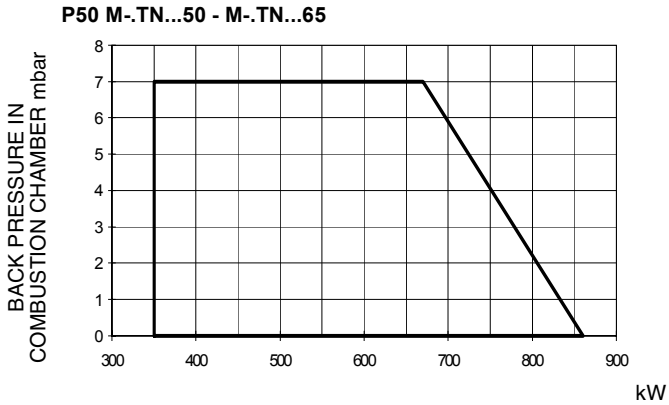

Fig. 10

------ Minimum high flame

PRESSURE - RATE IN COMBUSTION HEAD CURVES

Curves are referred to a null pressure in combustion head!

The pressure - gas rate curves are referred to the burner in operation with 3% of O_2, with the combustion head at the maximum opening, servocontrol at the maximum opening and gas butterfly valve fully opened. Refer to Fig. 11, showing the correct way to take the gas pressure, considering values of backpressure in combustion chamber.

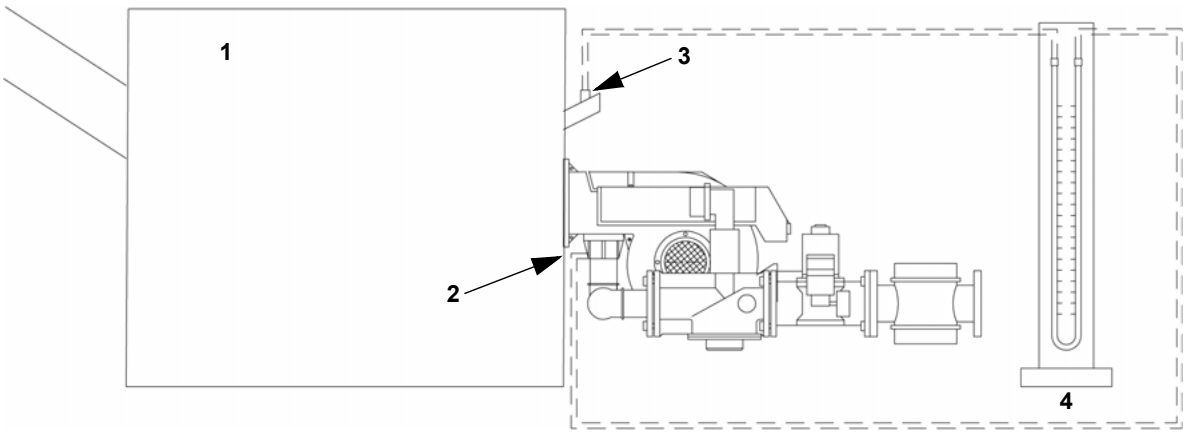

Fig. 11

Key

1 Boiler
2 Gas pressure port on butterfly valve
3 Sightglass cooling port
4 Water column pressure gauge

NOTE: THE PRESSURE-RATE CURVES ARE INDICATIVE; FOR A PROPER SETTING OF THE GAS RATE, PLEASE REFER TO THE GAS METER READING.

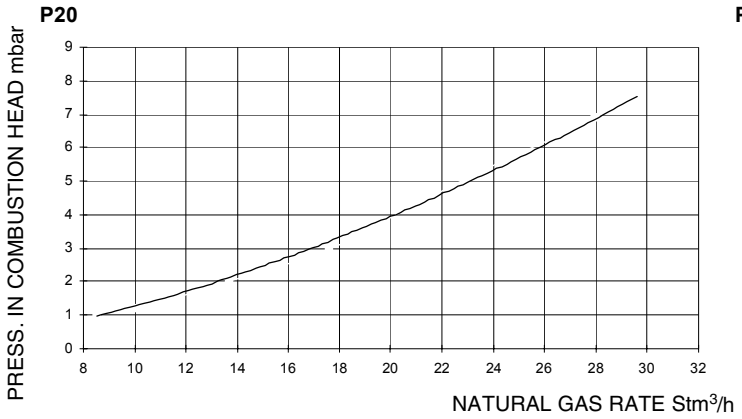

Fig. 12

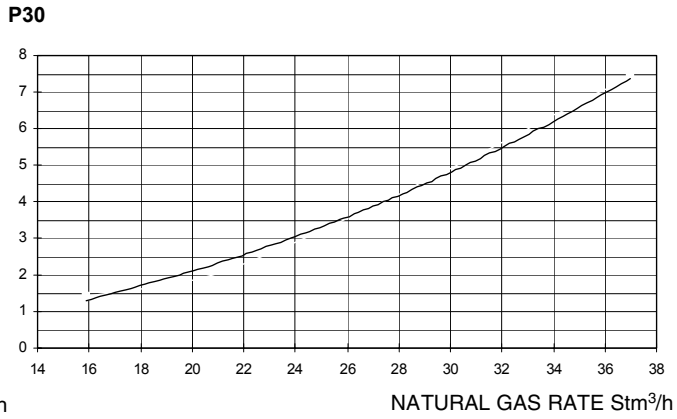

Fig. 13

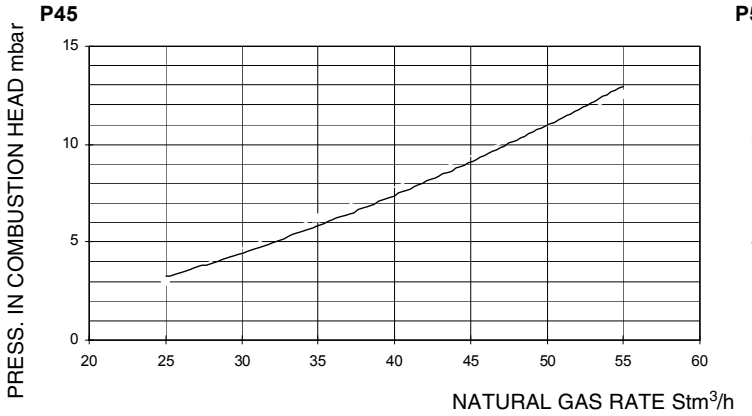

Fig. 14

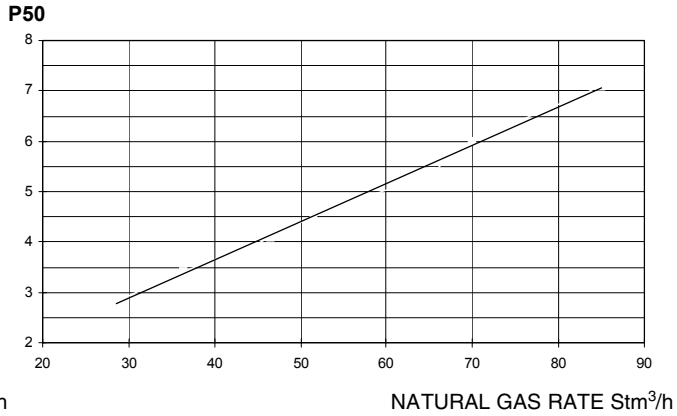

Fig. 15

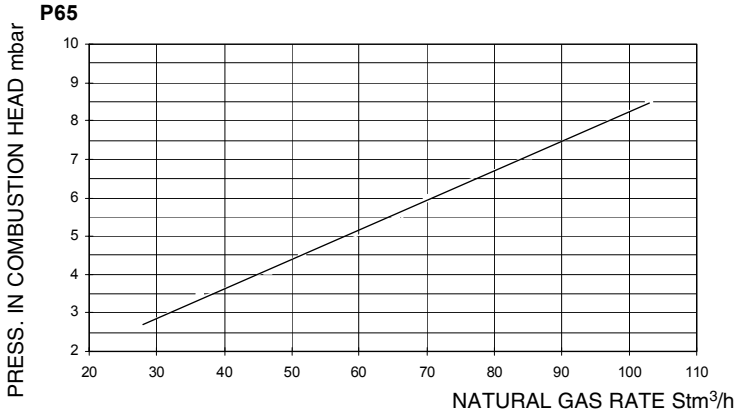

Fig. 16

NETWORK PRESSURE - RATE CURVES

P20 M-.TN..25

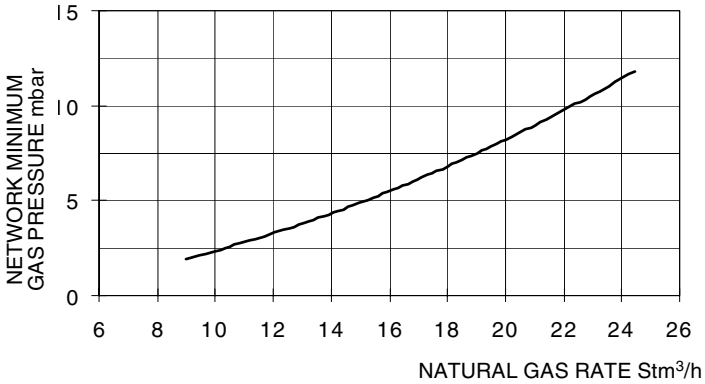

Fig. 17

P30 M-.TN

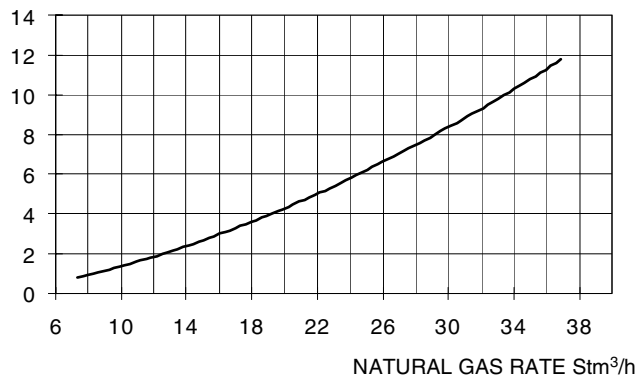

Fig. 18

P20 M-.TN..40

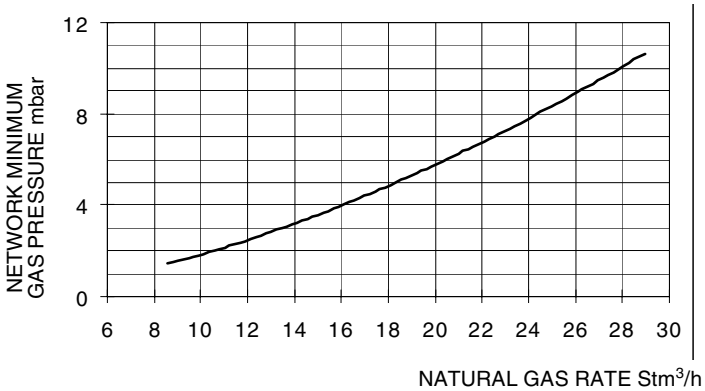

Fig. 19

P30 M-.AB

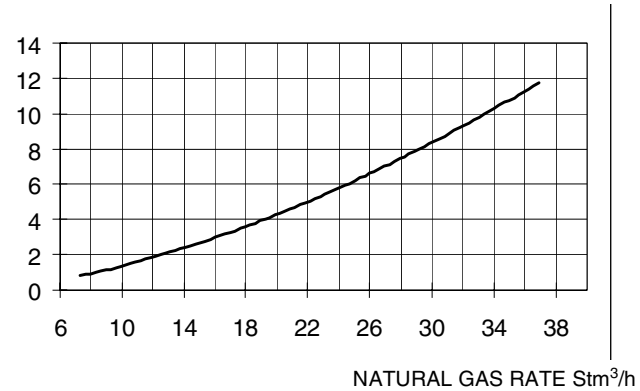

Fig. 20

P20 M-.AB..25

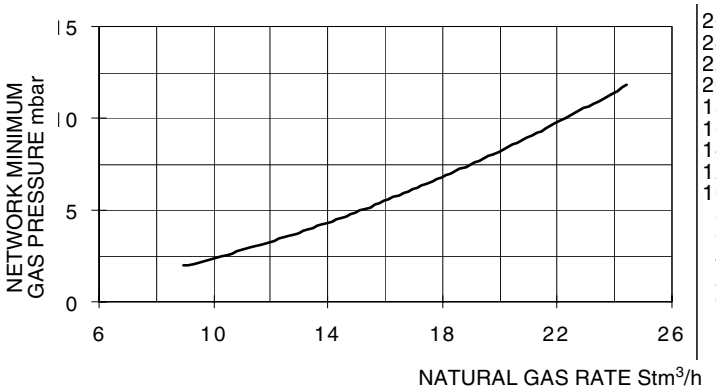

Fig. 21

P45 TN

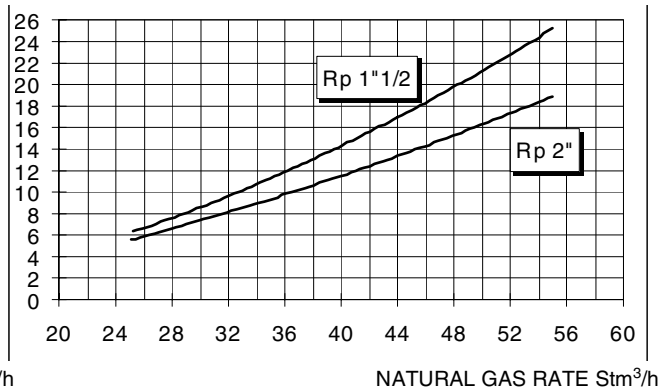

Fig. 22

P20 M-.AB..40

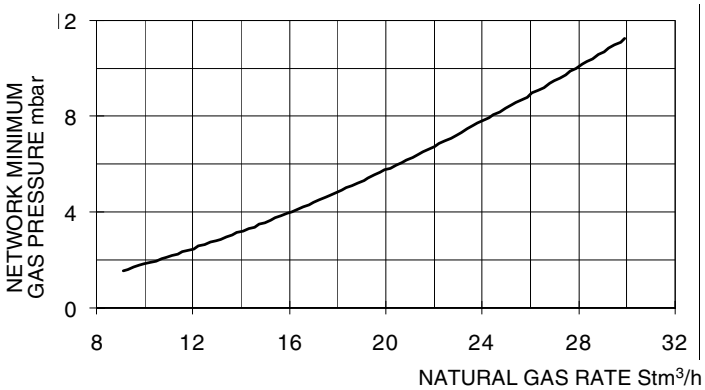

Fig. 23

P45 M-.AB

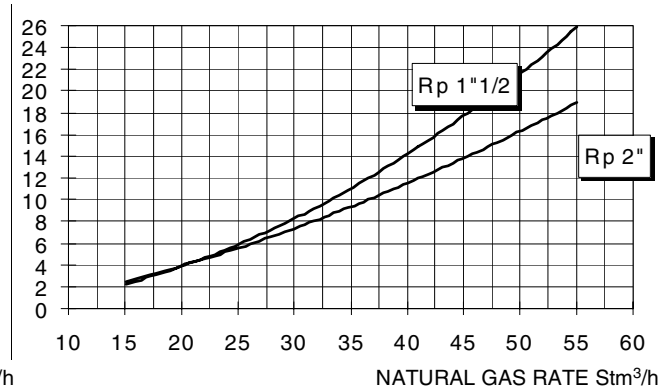

Fig. 24

P50 M-.TN..40

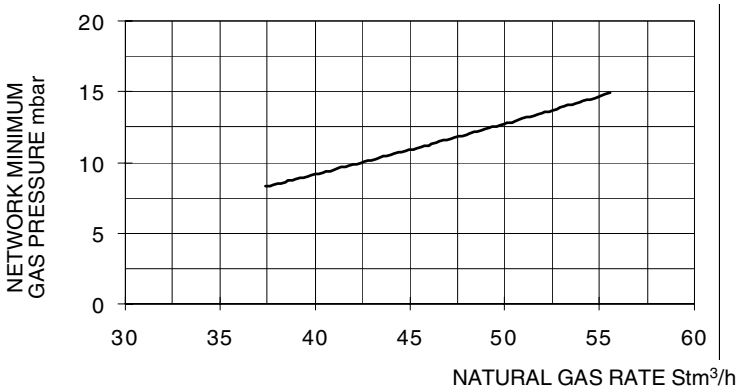

Fig. 25

P50 M-.TN..65

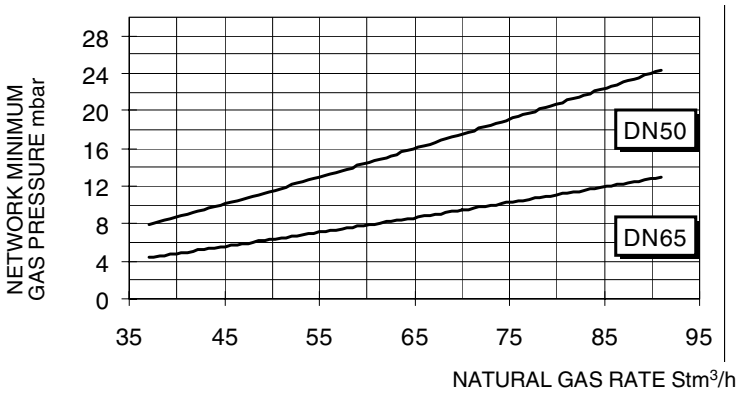

Fig. 26

P65 M-...50-65

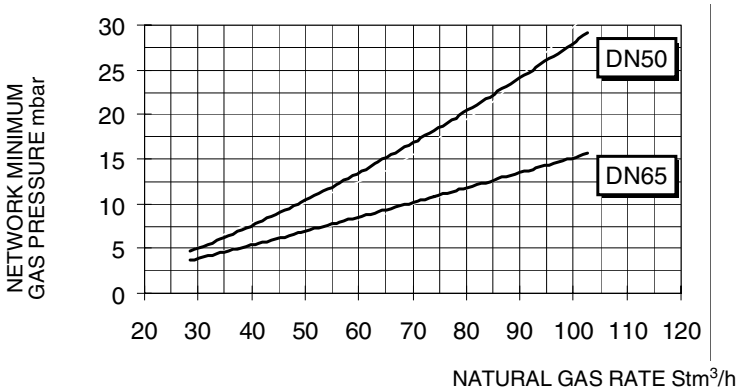

Fig. 27

MOUNTINGS AND CONNECTIONS

Packing

The burners are dispatched in cardboard pakages with dimensions:

P20 - P30	98 x 55 x 46	(W x H x D)
P45 - P50	118 x 67 x 57	(W x H x D)
P65	127 x 84 x 76	(W x H x D)

Packing cases of this kind are affected by humidity and are not suitable for stacking. The following are placed in each packing case.

1 burner with detached gas train (but electrically connected to the burner in DN65 models);

1 gasket to be inserted between the burner and the boiler;

1 envelope containing this manual .

Unpacking the burner take care of not to damage the electrical connection between the burner and the gas train (only on DN65 models).

To get rid of the burner's packing and in the event of scrapping of the latter, follow the procedures laid down by current laws on disposal of materials.

Fitting the burner to the boiler

After fitting the burner to the boiler ensure that the space between the blast tube and the refractory lining is sealed with appropriate insulating material (ceramic fibre cord or refractory cement).

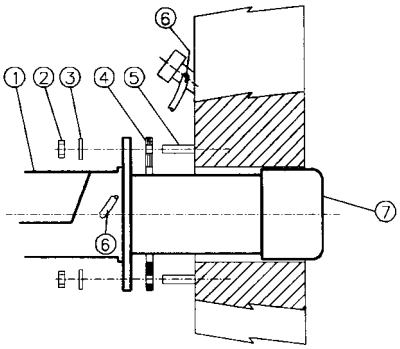

Fig. 28

Key

1 Burner
2 Fixing nut
3 Washer
4 Seal
5 Stud bolt
6 Sightglass cleaning tube
7 Blast tube

Matching the burner to the boiler

The burners described in this manual have been tested with combustion chambers that comply with EN676 regulation and whose dimensions are described in the diagram in Fig. 29. In case the burner must be coupled with boilers with a combustion chamber smaller in diameter or shorter than those described in the diagram, please contact the supplier, to verify that a correct matching is possible, with respect of the application involved.

To correctly match the burner to the boiler verify the necessary input and the pressure in combustion chamber are included in the burner performance curve; otherwise the choice of the burner must be revised consulting the burner manufacturer.

To choose the blast tube lenght follow the instructions of the boiler manufacturer. In absence of these consider the following:

- Cast-iron boilers, three pass flue boilers (with the first pass in the rear part): the blast tube must protrude no more than 100 mm into the combustion chamber.

The length of the blast tubes does not always allow this requirement to be met, and thus it may be necessary to use a suitably-sized spacer to move the burner backwards.

- Pressurised boilers with flame reversal: in this case the blast tube must penetrate at least 50 - 100 mm into combustion chamber in respect to the tube bundle plate.

Key

a) Heat input Q in kW

b) Lenght of the flame tube in meters

c) Flame tube firing intensity in MW/m^3

d) Combustion chamber diameter (m)

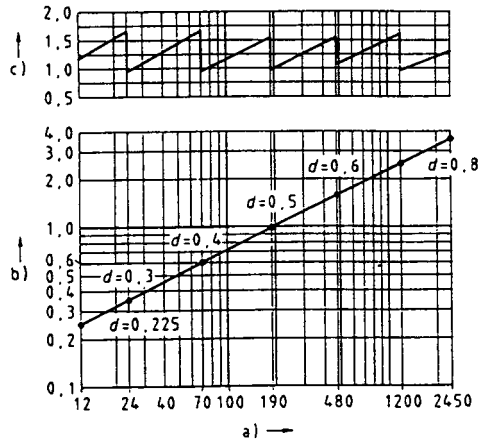

Fig. 29 - Firing intensity, diameter and lenght of the test flame tube as a function of the heat input Q.

ELECTRICAL CONNECTIONS

- Remove the front panel of the electrical board on the burner.

- Carry out the connections in the power supply electrical board as shown in the following diagrams, verify the fan motor direction (only in three-phase burners) and refit the electrical board front panel.

WARNING: The burners with high-low flame operation are fitted with an electrical bridge between terminals 6 and 7; in the event of connecting the high/low flame thermostat remove this bridge before connecting the thermostat.

IMPORTANT: In connecting electric supply wires to burner teminal block be sure that ground wire should be longer than phase and neutral ones.

For a complete key, see on Page 32, Page 35 and Page 42.

Diagrams for burners WITH printed circuit

Burners type P20 - P30 - P50 - P65 single stage, double stage and progressive

Fig. 30a

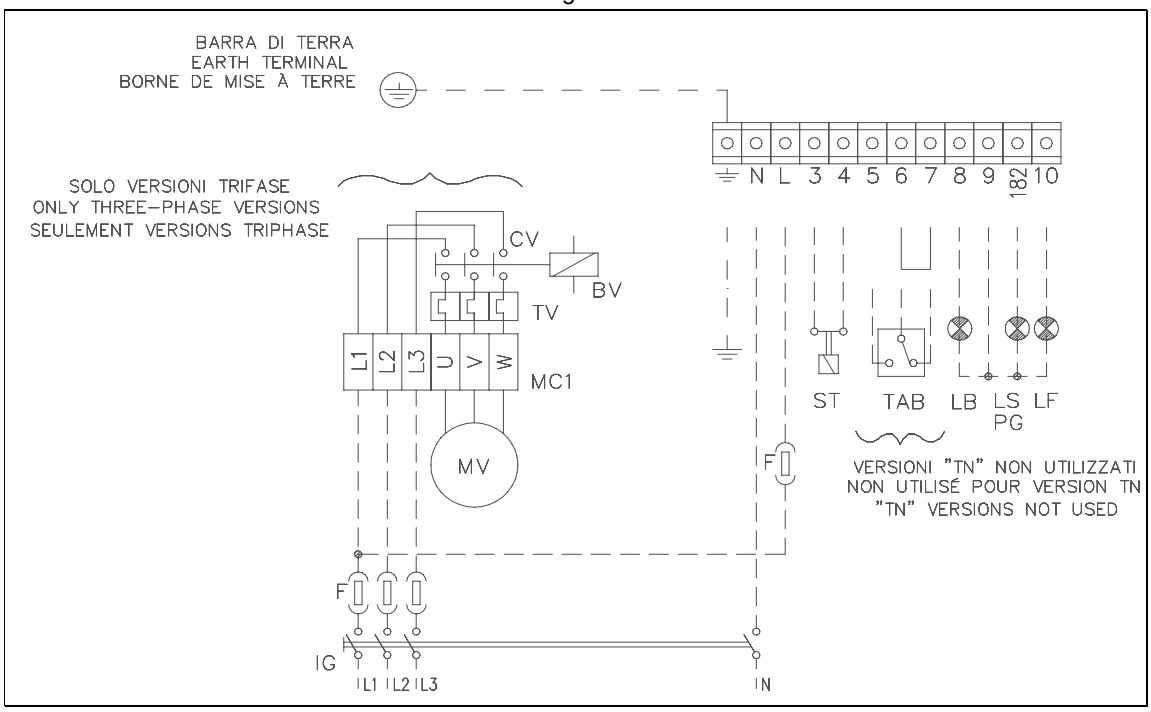

Burners type P45 single stage, double stage and progressive

Fig. 30b

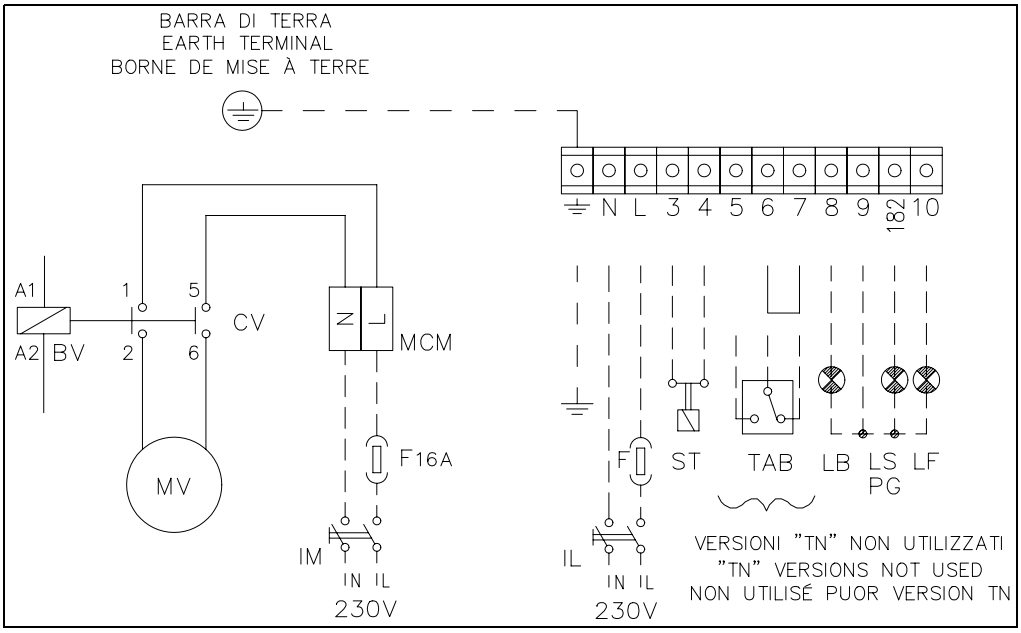

Power supply terminal board (three-phase burners)

Fig. 31a

Power supply terminal board for mono-phase burners type P45

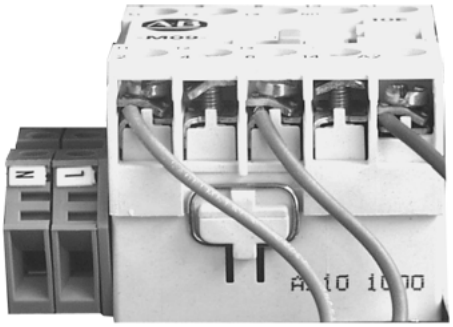

Fig. 31b

Terminal block for connections on printed circuit

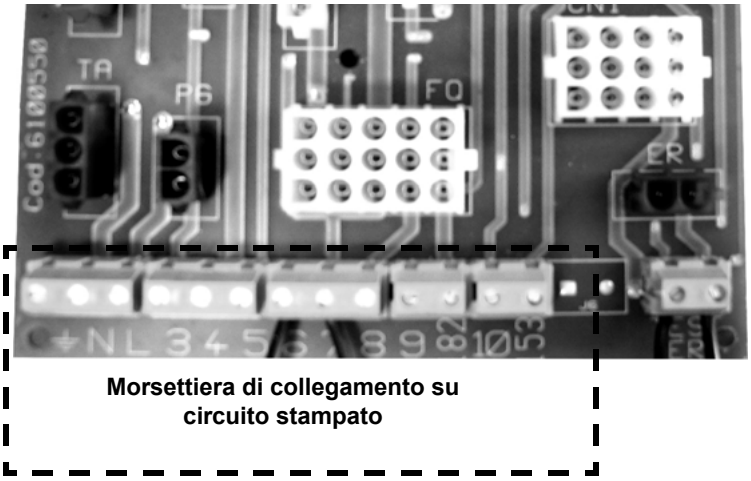

Fig. 32

Diagrams for burners WITHOUT printed circuit

Type P20 - P30 M-.TN...

Fig. 33a

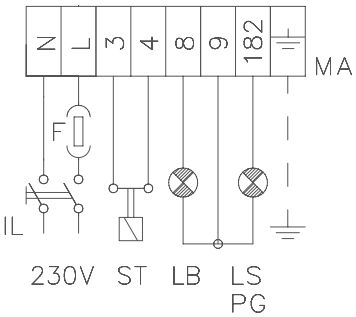

Type P50 M-.TN...

Fig. 34a

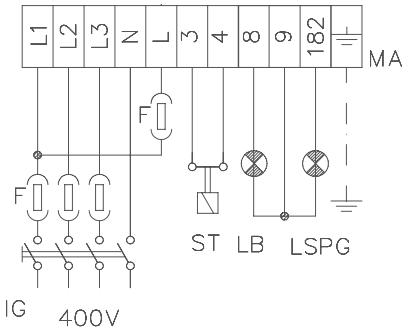

Type P20 - P30 M-.AB...

Fig. 33b

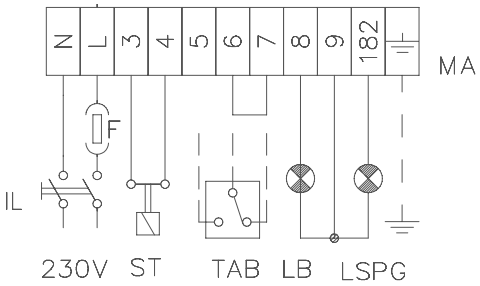

Type P65 M-.AB...

Fig. 34b

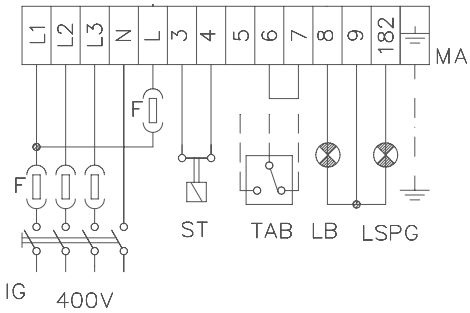

Type P20 - P30 M-.MD...

Fig. 35a

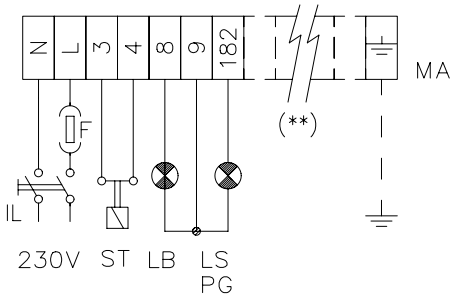

Type P45 M-.MD

Fig. 35b

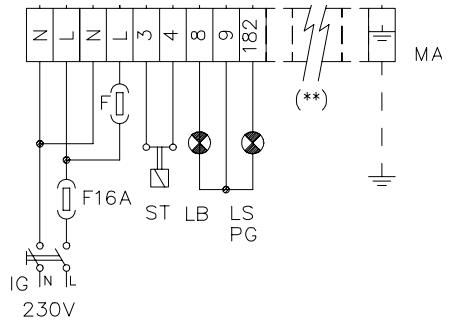

Type P65 M-.MD

Fig. 35c

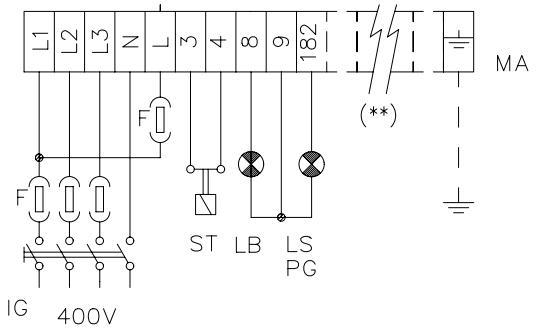

PROBE CONNECTION ON FULLY MODULATING BURNERS

(**)

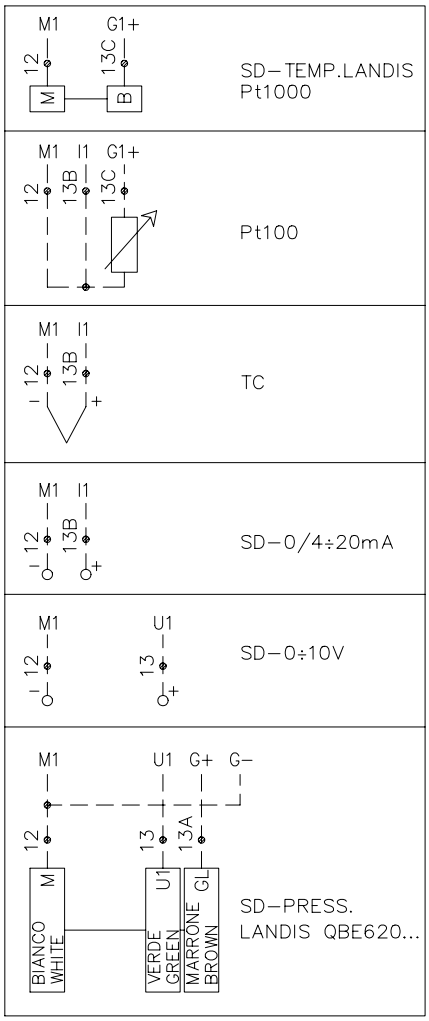

Fig. 36

(**) Probe connection, see Fig. 36

Rotation of fan motor

After completing the electrical connection of the burner, remember to check the rotation of the fan motor. The motor should rotate in an anti-clockwise direction looking at cooling fan. In the event of incorrect rotation reverse the three-phase supply and check again the rotation of the motor.

NOTE. the burners are supplied for three-phase 400 V supply, and in the case of three-phase 230 V supply it is necessary to modify the electrical connections into the terminal box of the electric motor and replace the overload tripped relay.

RESPECT THE BASIC SAFETY RULES. MAKE SURE OF THE CONNECTION TO THE EARTHING SYSTEM. DO NOT REVERSE THE PHASE AND NEUTRAL CONNECTIONS. FIT A DIFFERENTIAL THERMAL MAGNET SWITCH ADEQUATE FOR CONNECTION TO THE MAINS.

GAS TRAIN INSTALLATION DIAGRAMS

The figures shown the diagrams with the gas train components wich are included in the delivery and those wich must be fitted by the customer. The diagrams complies with regulations in force.

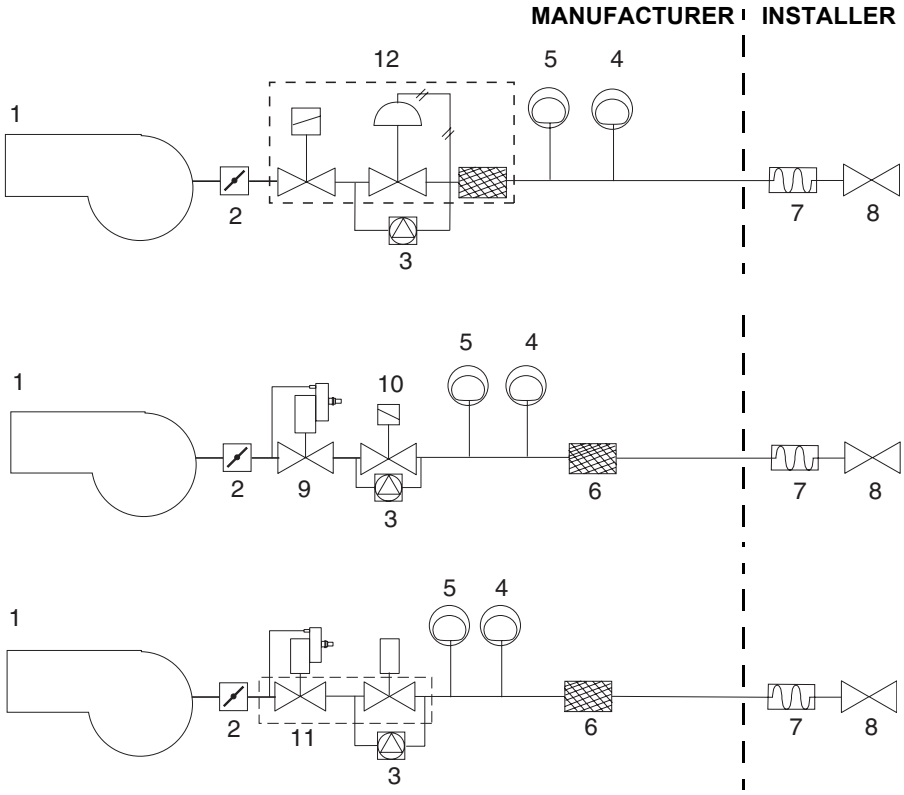

Fig. 37a
Gas train with valves group MB-DLE (2 valves + gas filter + pressure governor + pressure switch) + leakage control VPS504

Fig. 37b
Gas train with safety valve + gas valve with built in pressure governor + leakage control VPS504

Fig. 37c
Gas train with valves group VGD with built-in gas pressure governor + leakage control VPS504

Key

1 Burner
2 Butterfly valve
3 Leakage control device (optional if output < 1200 kW)
4 Maximum gas pressure switch (optional)
5 Minimum gas pressure switch
6 Gas filter
7 Bellow joint
8 Manual cock
9 Gas valve with pressure governor
10 Safety gas valve
11 Valves group VGD
12 Valves group MB-DLE
13 Valves group DMV-DLE
14 Pressure governor with filter
15 Leakage control pressure switch
16 Gas pressure governor

Fig. 37d
Gas train with valves group VGD with built-in gas pressure governor + leakage control LDU11

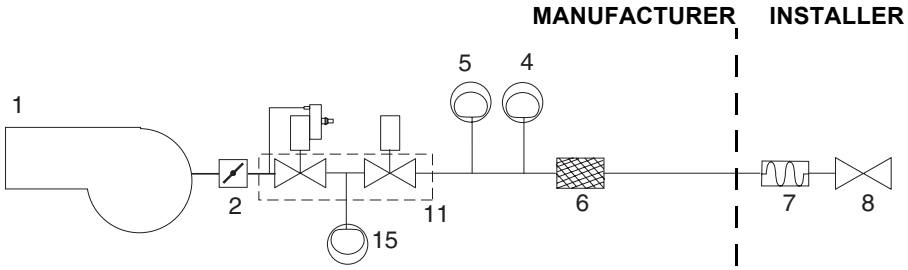

Fig. 37e
Gas train with valves group DMV-DLE + leakage control VPS504

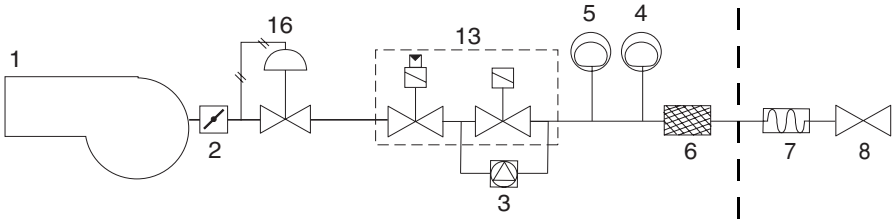

Fig. 37f
Gas train with valves group DMV-DLE + leakage control LDU11

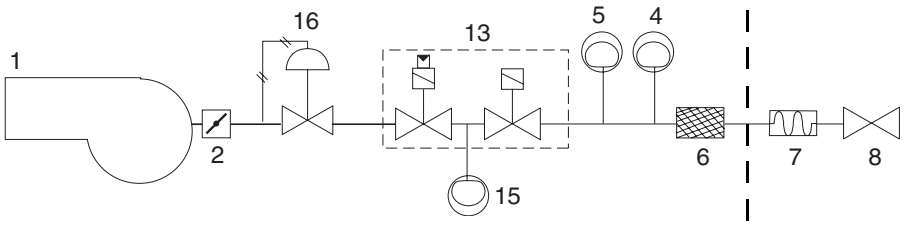

Key

1 Burner
2 Butterfly valve
3 Leakage control device (optional if output < 1200 kW)
4 Maximum gas pressure switch (optional)
5 Minimum gas pressure switch
6 Gas filter
7 Bellow joint
8 Manual cock
9 Gas valve with pressure governor
10 Safety gas valve
11 Valves group VGD
12 Valves group MB-DLE
13 Valves group DMV-DLE
14 Pressure governor with filter
15 Leakage control pressure switch
16 Gas pressure governor

SETTINGS

WARNING!
THE SEALED SCREWS MUST NOT BE UNLOOSED!
IN A SUCH CASE THE DEVICE WARRANTY IS IMMEDIATELY INVALIDATE!

Fig. 38 - Multibloc MB-DLE - VPS504

The multibloc unit is a compact unit consisting of two valves, gas pressure switch, pressure stabilizer and gas filter. It can be paired jointly to the Dungs VPS504 sealing controls.

The valve is adjusted by means of the RP regulator after slackening the locking screw VB by a number of turns. By unscrewing the regulator RP the valve opens, screwing the valve closes.

To set the fast opening remove cover T, reverse it upside down and use it as a tool to rotate screw VR. Clockwise rotation reduces start flow rate, anticlockwise rotation increases it.

Do not use a screwdriver on the screw VR!

The pressure stabilizer is adjusted by operating the screw VS located under the cover C. By screwing down the pressure is increased and by unscrewing it is reduced.

Note: the screw VSB must be removed only in case of replacemente of the coil.

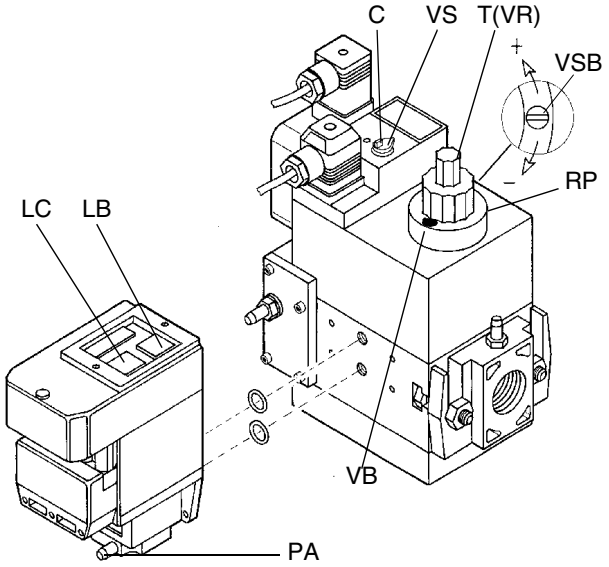

Fig. 38

Leakage control device VPS504 (Optional)

The VPS504 check the operation of the seal of the gas shut off valves costituting the MB-DLE. This check, carried out as soon as the boiler thermostat gives a start signal to the burner, creates, by means of the diaphragm pump inside it, a pressure in the test space of 20 mbar higher than the supply pressure. When wishing to monitor the test, install a pressure gauge ranged to that of the pressure supply point PA. If the test cycle is satisfactory, after a few seconds the consent light LC (yellow) comes on. In the opposite case the lockout light LB (red) comes on.

To restart it is necessary to reset the appliance by pressing the illuminated pushbutton LB.

Gas valve Dungs MV-DLE

- To adjust the gas flow rate loosen the screw VB and rotate the regulator RP as necessary. Unscrew to close the valve, screw to open.
- Tighten the screw VB.
- To set the fast opening remove cover T, reverse it upside down and use it as a tool to rotate the screw VR. Clockwise rotation reduces the ignition flow rate, anticlockwise rotation increase it.

Note: the screw VSB must be removed only in case of replacemente of the coil.

Do not use a screwdriver on the screw VR!

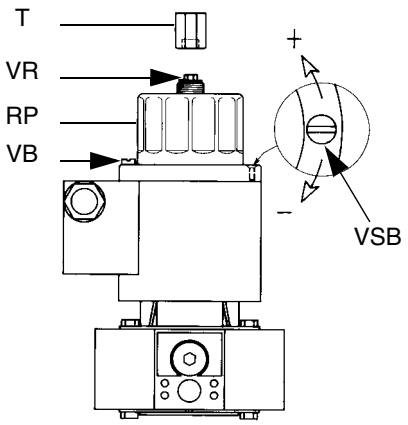

Fig. 39

Gas valve Dungs MVD

- To adjust the gas flow rate unscrew the plug T, slacken the locking nut and apply a screwdriver to the adjusting screw VR. Turn clockwise to close the valve or counterclockwise to open.
- When this operation has been completed lock the nut and screw down the plug T.
- To replace the coil remove the plug T, withdraw the coil B and after replacing the coil refit the plug T.

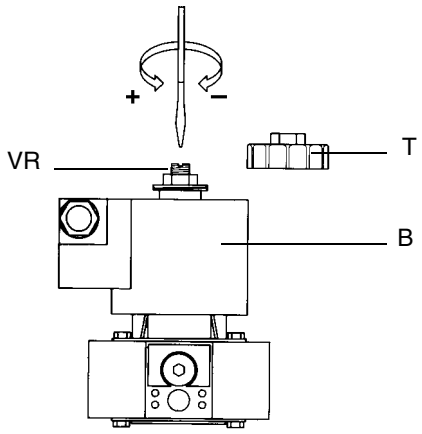

Fig. 40

Landis gas valves

Version with SKP20 (with incorporated pressure governor).

- To increase or decrease gas pressure, and therefore gas flow rate, remove the cap T and use a screwdriver to adjust the regulator screw VR. Turn clockwise to increase the flow, anti-clockwise to reduce it.
- Connect up the gas tubing to the gas pressure nipple (TP in figure).

Leave the blowhole free (SA in figure).

Should the spring fitted not permit satisfactory regulation, ask one of our service centres for a suitable replacement.

(For further informations see also the appendix)

WARNING:
removing the four screws BS drives the device to be unserviceable!

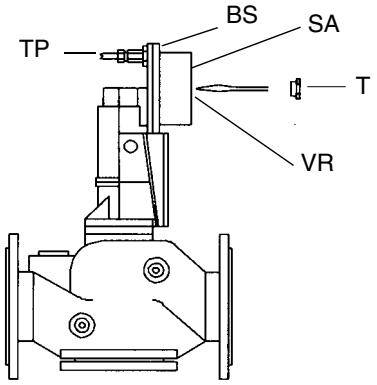

Fig. 41

Landis gas valves VGD

Version with SKP20 (with incorporated pressure governor).

- To increase or decrease gas pressure, and therefore gas flow rate, remove the cap T and use a screwdriver to adjust the regulator screw VR. Turn clockwise to increase the flow, anti-clockwise to reduce it.
- Connect up the gas tubing to the gas pressure nipple (TP in figure).

Leave the blowhole free (SA in figure).

Should the spring fitted not permit satisfactory regulation, ask one of our service centres for a suitable replacement.

(For further informations see also the appendix)

⚠ **WARNING: removing the four screws BS causes the device to be unserviceable!**

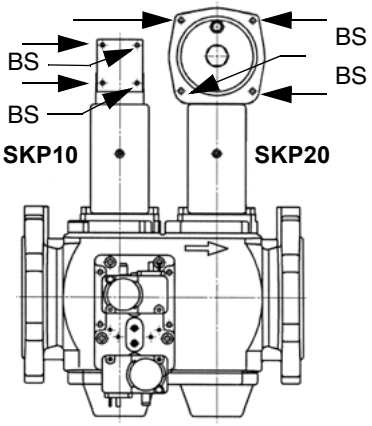

Fig. 42a

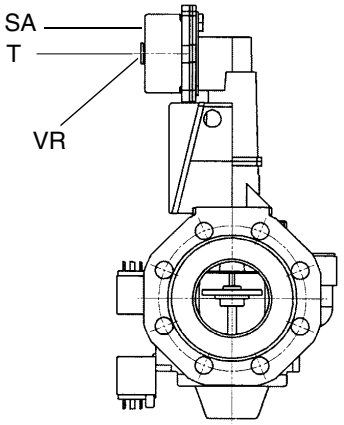

Fig. 42b

Dungs Valves

SV (without regulation)
SV-D Quick opening valve with regulation
SV-DLE Slow opening valve with regulation

SV-D...

- To adjust the valve slacken the screw VR and turn the knob G.
- Rotate clockwise to open the valve
- Rotate counterclockwise to close the valve
- Tight the screw VR at the end of setting

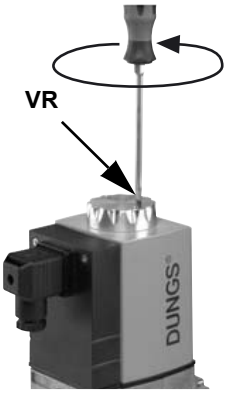

Fig. 43a

Fig. 43b

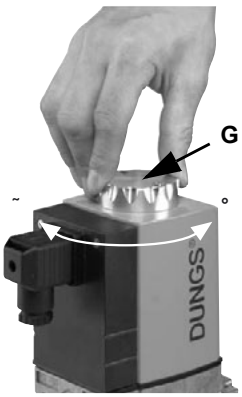

Fig. 43c

SV-DLE...

- To adjust the valve slacken the screw VR and turn the knob G.
- Rotate clockwise to open the valve
- Rotate counterclockwise to close the valve
- Tight the screw VR at the end of setting

Rapid stroke adjustment

- Unscrew the cap E from the hydraulic brake unit

Turn the adjustment cap E upside down and use it as a tool, tucking it in the regulation spindle

- Turn clockwise to increase the rapid stroke

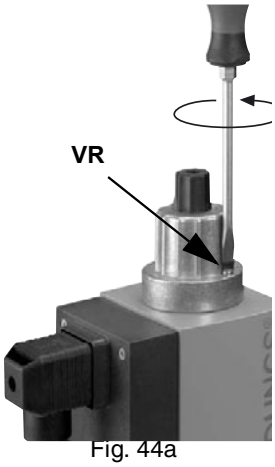

Fig. 44a

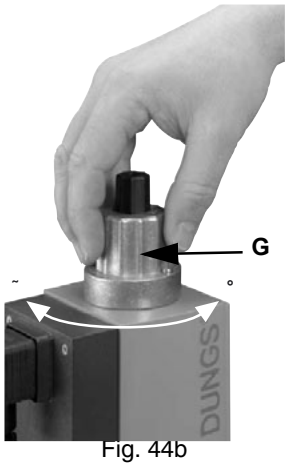

Fig. 44b

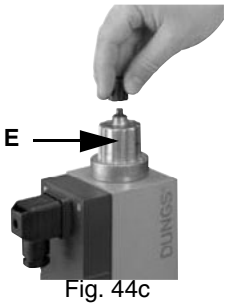

Fig. 44c

ValvesDungs DMV-DLE

Setting is carried out working on the screw V1. Turning clockwise the valve closes, turning counterclockwise the valve opens.

Fast stroke setting

- Unscrew the setting cap E.
- Turn the cap upside down and use it as a tool tucking it in the regulation spindle.

Rotate counterclockwise to increase rapid stroke.

Warning: the knob F doesn't make any setting!

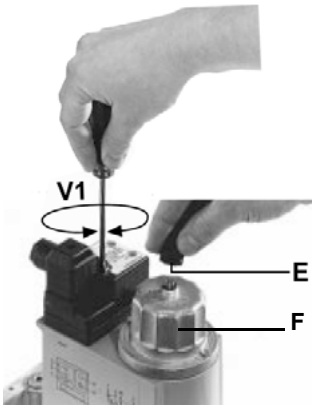

Fig. 45

Pressure regulator Dungs FRS
Adjustment

- Unscrew the protection cap A
- Rotate the regulation screw B clockwise to increase the pressure or counterclockwise to decrease it
- Check the pressure at the end of settings
- Replace the protection cap A

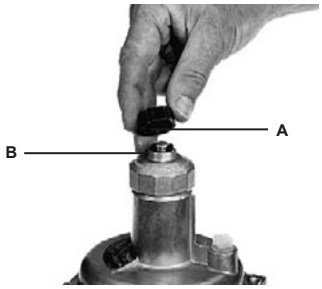

Fig. 46a

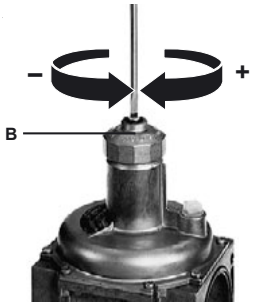

Fig. 46b

GAS FILTER

The gas filters are components that remove the dust particles carried by the gas, and prevent the elements at risk (e.g.: burners, counters and regulators) from becoming rapidly blocked. The filter is normally installed upstream from all the control and on-off devices.

GAS FILTER MAINTENANCE

Flanged fittings - Fig. 47a

After having ensured that there is no pressurised gas inside the filter, remove the cover (1) by unscrewing the fastening screws (8). Remove the filter cartridge (3), wash it in soap and water, blow it with compressed air (or replace if necessary) and put it back in its initial position, checking that it fits between the positioning guides (6) on the bottom (5) and that it does not stop the cover (1) from being put back in place. Finally, put the cover (1) back in place, making sure that the O-Ring (2) is in its seat and that the filter cartridge (3) fits neatly between the guides (6) on the cover (1), the same as those on the bottom (5).

Threaded fittings - Fig. 47b and Fig. 47c

After having ensured that there is no pressurised gas inside the filter, remove the cover (5) by unscrewing the fastening screws (1). Remove the filter cartridge (3), wash it in soap and water, blow it with compressed air (or replace if necessary) and put it back in its initial position, checking that it fits between the positioning guides (7) and that it does not stop the cover (5) from being put back in place. Finally, put the cover (5) back in place, making sure that the O-Ring (4, Fig. 47b) is in its seat.

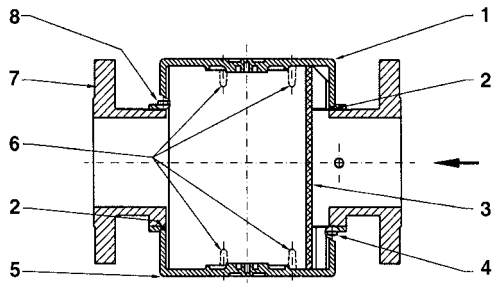

Fig. 47a

Key (Fig. 47a)

1 Cover
2 O-Ring
3 Filter cartridge
4 Screws M5 x 12
5 Bottom
6 Positioning guides
7 Body
8 Screws M5 x 14

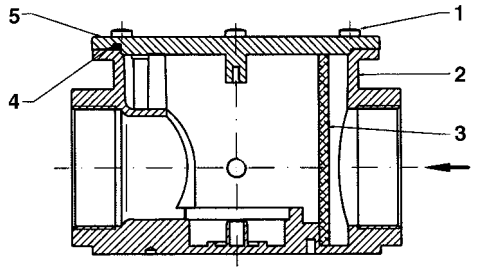

Fig. 47b

Key (Fig. 47b - Fig. 47c)

1 Fastening screws
2 Body
3 Filter cartridge
4 O-Ring
5 Cover
6 Pressure port
7 Positioning guides

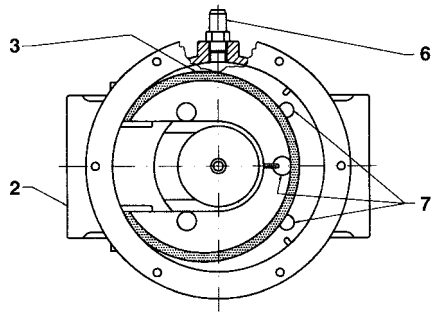

Fig. 47c - Top view, without cover

ADJUSTMENT OF GAS AND AIR FLOW RATE

WARNING: During commissioning operations, do not let the burner operate with insufficient air flow (danger of formation of carbon monoxide); if this should happen, shut down the burner, increase the opening of the air damper and start up the burner again to ensure the purging of the carbon monoxide from the combustion chamber.

Startup input

The start-up heat input shall not exceed 120 kW (single stage burners) or 1/3 of nominal input (2 stages or fully modulating burners). In order to comply with these requirements, single stage burners are dispatched from the factory with appropriate setting of the hydraulic brake of gas valve.

On 2 stages or modulating burners, take care to set the minimum gas flow rate lower than 1/3 of nominal input.

Important. Set the air flow rate referring to the following values: minimum CO_2 value for G25: 9.58% (8.85% if the burner is set at its minimum output) with single stage models or during low fire operation on hi-lo flame or fully modulating burners.

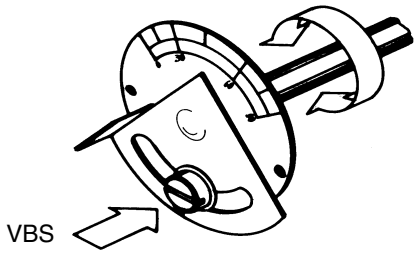

Fig. 48

Burners with single stage operation

- Slacken the screw VBS shown in Fig. 48 by means of a screwdriver; set the desired air flow rate by adjusting directly the damper.
- On final adjustment tight the screw VBS.

Burners with fully modulating or progressive operation

During the test in the factory, the gas throttle valve, air damper in low flame operation and the servocontrol are set to average values.

To recalibrate the burner on site, proceed as follows.

1 Switch on the burner and drive it to high-flame (servocontrol position = 90°).

Adjust the gas flow rate to the required figure by adjusting the pressure governor or the valve regulator. To adjust the air flow rate (Fig. 53) slacken the screw RA and rotate the screw VRA (clockwise rotation increases air flow, anticlockwise rotation decreases it) until the desired flow rate is obtained.

N.B.: at the end of settings remember to tight the screw RA.

2 Drive the burner to low flame. If it should be necessary to adjust burner capacity at low flame move the servocontrol cam accordingly (Page 25).

3 Adjust the gas flow rate in the low-flame position (same position as the ingition) by means of the adjustable screws V (Fig. 53), to change the opening angle of the throttle valve (Fig. 52); rotate clockwise to increase the flow rate or anticlockwise to decrease it.

4 Turn off the burner and turn it on again. If the gas flow rate needs further regulations, repeat operations at step 3.

Fully modulating burners

To set the gas flow rate in low flame and in the intermediate points, proceed as follows.

5 Push the button EXIT on the modulator device (Fig. 57) for a time of 5 seconds; when the led with the hand simbol lights, use the arrow keys to drive the servocontrol to the maximum opening position and, stopping the movement at each screw V, use the one corresponding to the bearing to set the gas flow rate.

6 Push the EXIT button to exit the manual operation mode.

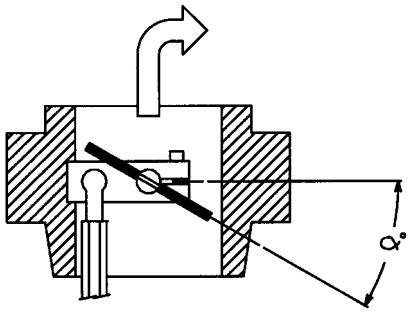

Fig. 52

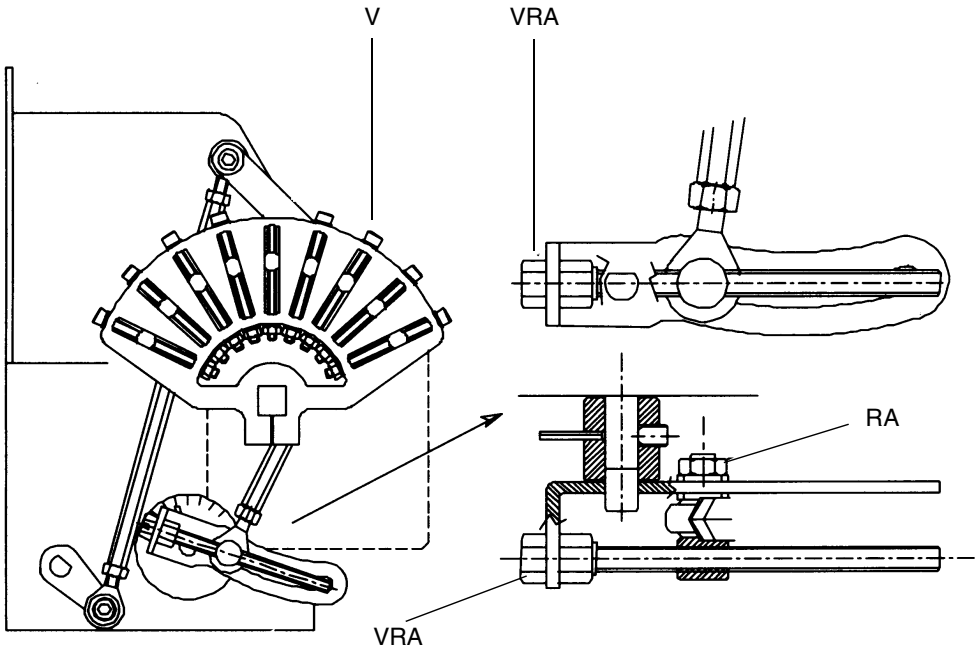

Fig. 53

Double-stage burners

9 drive the burner to the low flame stage by means of the **TAB** thermostat;

10 In order to change the gas flow rate slacken the nuts **DB** (Fig. 24) and adjust the opening angle of the gas butterfly valve by rotating the rod **TG** (clockwise rotation increases gas flow, anticlockwise rotation decreases it). The slot on the butterfly valve shaft shows the opening degree of the valve regardingthe horizontal axis (Fig. 24).

NOTE: At the end of settings, make sure the locking screws **RA** and **DB** are fully tightened.

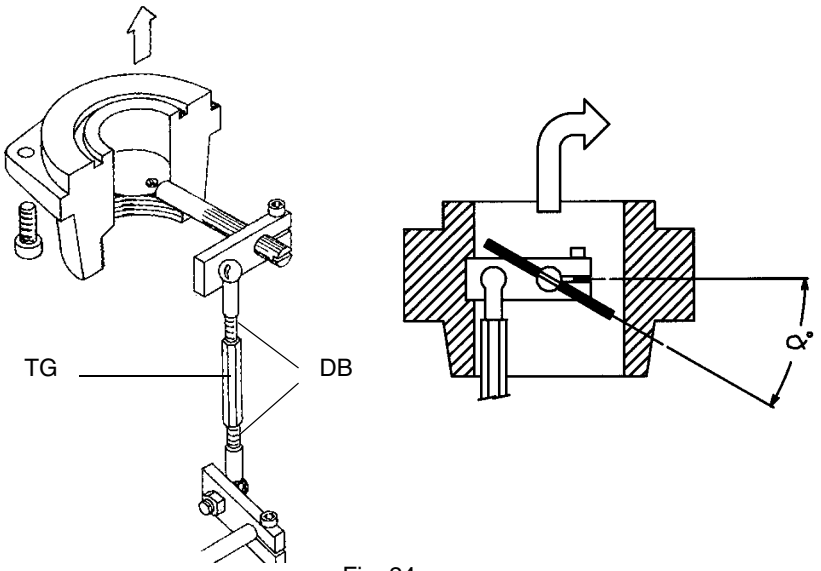

Fig. 24

11 Now adjust the pressure switches (see page 27).

12 If it is necessary to change the burner output in the low flame stage, move the low flame cam: the low flame position matches the ignition position. As far as burners fitted with Dungs MBC gas valves, the low flame cam does not match the ignition cam position, that is why it must be set at about 30° more than the ignition cam.

13 Turn the burner off and then start it up again. If the adjustment is not correct, repeat the previous steps.

Berger STA6 B 3.41 (high-low flame burners)

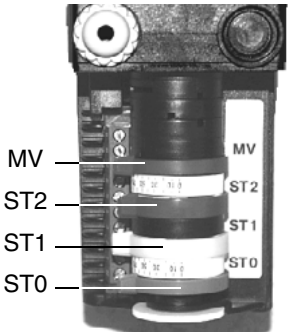

Siemens SQN72.2A4Axx (high-low flame burners)

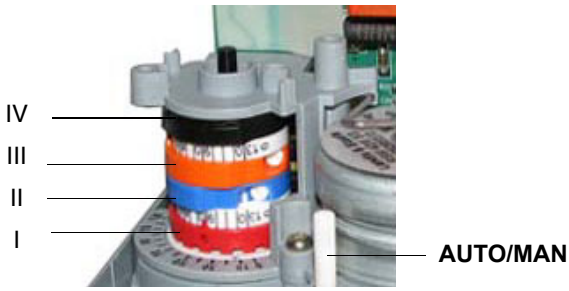

For DUNGS MB-DLE / Siemens VGD gas valves	Actuator camsBerger STA	Siemens SQN72
High flame position (set to 90°)	ST2	I (red)
Low flame and ignition position	ST1	III (orange)
Stand-by position (set to 0°)	ST0	II (blue)
Not used	MV	IV (black)

For DUNGS MBCgas valves	Actuator camsBerger STA	Siemens SQN72
High flame position (set to 90°)	ST2	I (red)
Stand-by position (set to 0°)	ST0	III (orange)
Ignition	ST1	II (blue)
Low flame position	MV	IV (black)

Berger STA12: a key is provided to move the cams.

Siemens SQN72: a key is provided to move cams I and IV, the other cams can be moved by means of screws.

On the BERGER STA12B3.41 actuator, the manual air damper control is not provided. On the Siemens actuator the AUTO/MAN mode is provided (see picture).

Progressive burners

Once the procedure till step 8 described on paragraph “Adjusting procedure” on page 22, is accomplished, go on as follows:

9 set the low flame cam matching the high flame cam;

10 set the **TAB** thermostat to the minimum in order that the actuator moves progressively towards the low flame position;

The manual air damper control is not provided on these actuators. The adjustments must be carried out acting manually on the cams.

Berger STA12B3.41 (progressive and fully modulating burners)

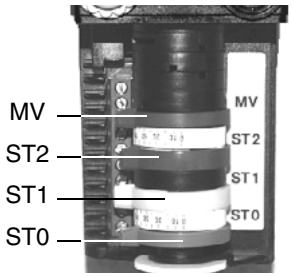

Siemens SQN72.4A4Axx (progressive and fully modulating burners)

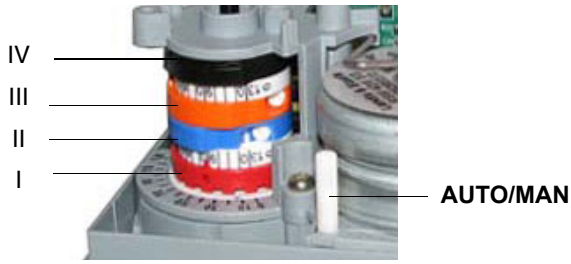

For DUNGS MB-DLE / Siemens VGD gas valves	Actuator camsBerger STA	Siemens SQN72
High flame position (set to 90°)	ST2	I (red)
Low flame and ignition position	ST1	III (orange)
Stand-by position (set to 0°)	ST0	II (blue)
Not used	MV	IV (black)

For DUNGS MBCgas valves	Actuator camsBerger STA	Siemens SQN72
High flame position (set to 90°)	ST2	I (red)
Stand-by position (set to 0°)	ST0	III (orange)
Ignition	ST1	II (blue)
Low flame position	MV	IV (black)

IBerger STA12: a key is provided to move the cams.

Siemens SQN72: a key is provided to move cams I and IV, the other cams can be moved by means of screws.

On the BERGER STA12B3.41 actuator, the manual air damper control is not provided. On the Siemens actuator the AUTO/MAN mode is provided (see picture).

11 move the low flame cam to the minimum to move the actuator towards the low flame until the two bearings find the adjusting screw that refers to the lower position: screw **V** to increase the rate, unscrew to decrease.

12 Move again the low flame cam towards the minimum to meet the next screw on the adjusting cam and repeat the previous step; go on this way as to reach the desired low flame point.

13 Now adjust the pressure switches (see page 27).

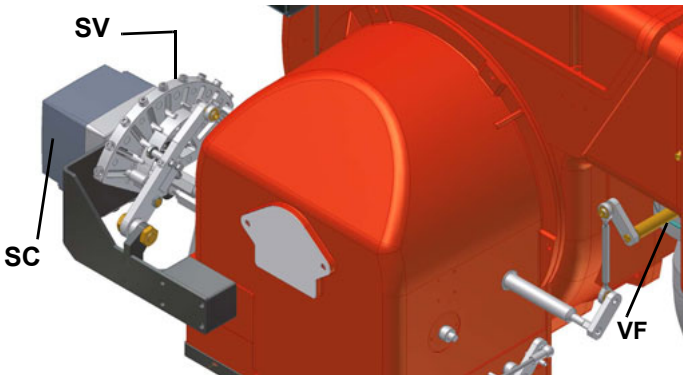

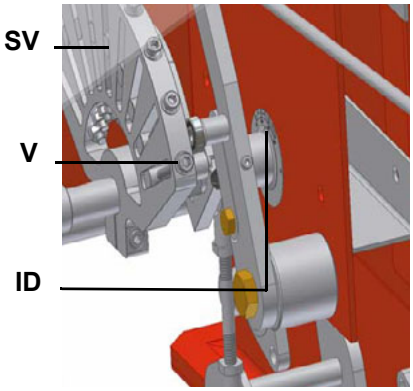

Gas butterfly valve closed

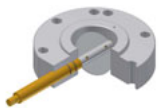

Gas butterfly valve open

14 If it is necessary to change the burner output in the low flame stage, move the low flame cam: the low flame position matches the ignition position. As far as burners fitted with Dungs MBC gas valves, the low flame cam does not match the ignition cam position, that is why it must be set at about 30° more than the ignition cam.

15 Turn the burner off and then start it up again. If the adjustment is not correct, repeat the previous steps.

Calibration of air pressure switch (single stage burners)

Calibration is carried out as follows:

- Remove the transparent plastic cap.
- After air and gas setting have been completed, start the burner.
- The pre-purge phase starts; wait 10 sec. then slowly turn the adjusting ring nut VR in the clockwise direction until the burner lockout, read the value on the pressure switch scale and reduce it by 0.5 mbar.
- Repeat the start up cycle of the burner and check it runs properly.
- Refit the transparent plastic cover on the pressure switch.

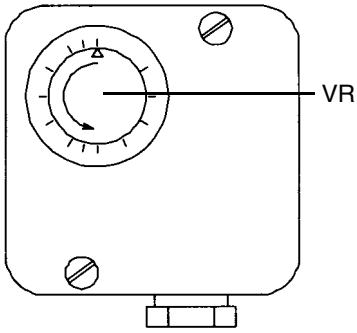

Fig. 55

Calibration of air pressure switch (double stage and fully modulating burners)

Calibration is carried out as follows:

- Remove the transparent plastic cap.
- After air and gas setting have been completed, start the burner.
- The pre-purge phase starts; wait 10 sec. then slowly turn the adjusting ring nut VR in the clockwise direction until the burner lockout, read the value on the pressure switch scale and reduce it by 15%.
- Repeat the ignition cycle of the burner and check it runs properly.
- Refit the transparent plastic cover on the pressure switch.

Calibration of minimum gas pressure switch

Calibration is carried out as follows:

- Remove the transparent plastic cap.
- With the burner in operation test the pressure on the pressure port at the input of the gas filter; slowly close the manual shut-off valve (see gas train installation diagram) until the detected pressure is reduced by 50%.
- Verify CO emissions of the burner; if the measured value is less than 80 ppm screw down the adjusting ring nut until the burner lockout. If CO emissions are greater than 80 ppm open the shut off valve until the CO value is reduced to 80 ppm, then screw down the adjusting ring nut until the burner lockout.
- Fully open the manual shut-off valve ⚠ **WARNING: carry out this operation ONLY with the burner turned off!**
- Refit the transparent plastic cover on the pressure switch.

Calibrating the maximum gas pressure switch

The high gas pressure switch is mounted on the burner near to the throttle valve and is connected to it by a copper tube. Calibration is carried out as follows:

- Remove the transparent plastic cap.
- Drive the burner to maximum output.
- Rotate slowly the adjustment ring nut VR clockwise, until the burner stops.
- Rotate the adjustment ring nut slightly back (increase the value indicated on the scale nut after rotation, by 30%).
- Turn on the burner and verify it operates correctly; if it shuts-off, turn back the setting knob again.
- Refit the transparent plastic cover on the pressure switch.

Adjusting the combustion head

The burner is adjusted in the factory with the combustion head in the "MAX" position, corresponding to the maximum power. To operate the burner at a lowest strenght, progressively shift back the combustion head, toward the "MIN" position, rotating the screw VRT clockwise.

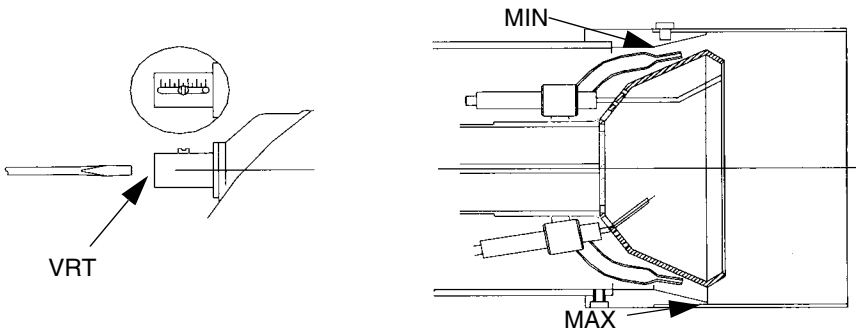

Fig. 56

PART II: OPERATION MANUAL

LIMITATIONS OF USE

THE BURNER IS AN APPLIANCE DESIGNED AND CONSTRUCTED TO OPERATE ONLY AFTER BEING CORRECTLY CONNECTED TO A HEAT GENERATOR (E.G. BOILER, HOT AIR GENERATOR, FURNACE, ETC.), ANY OTHER USE IS TO BE CONSIDERED IMPROPER AND THEREFORE DANGEROUS.

THE USER MUST GUARANTEE THE CORRECT FITTING OF THE APPLIANCE, ENTRUSTING THE INSTALLATION OF IT TO QUALIFIED PERSONNEL AND HAVING THE FIRST COMMISSIONING OF IT CARRIED OUT BY A SERVICE CENTRE AUTHORISED BY THE COMPANY MANUFACTURING THE BURNER.

A FUNDAMENTAL FACTOR IN THIS RESPECT IS THE ELECTRICAL CONNECTION TO THE GENERATOR'S CONTROL AND SAFETY UNITS (CONTROL THERMOSTAT, SAFETY, ETC.) WHICH GUARANTEES CORRECT AND SAFE FUNCTIONING OF THE BURNER.

THEREFORE, ANY OPERATION OF THE APPLIANCE MUST BE PREVENTED WHICH DEPARTS FROM THE INSTALLATION OPERATIONS OR WHICH HAPPENS AFTER TOTAL OR PARTIAL TAMPERING WITH THESE (E.G. DISCONNECTION, EVEN PARTIAL, OF THE ELECTRICAL LEADS, OPENING THE GENERATOR DOOR, DISMANTLING OF PART OF THE BURNER).

NEVER OPEN OR DISMANTLE ANY COMPONENT OF THE MACHINE.

OPERATE ONLY THE MAIN SWITCH, WHICH THROUGH ITS EASY ACCESSIBILITY AND RAPIDITY OF OPERATION ALSO FUNCTIONS AS AN EMERGENCY SWITCH, AND ON THE RESET BUTTON.

IN THE EVENT OF REPEATED LOCKOUTS, DO NOT PERSIST WITH THE RESET BUTTON AND CONTACT QUALIFIED PERSONNEL WHO WILL PROCEED TO ELIMINATE THE MALFUNCTION.

WARNING: DURING NORMAL OPERATION THE PARTS OF THE BURNER NEAREST TO THE GENERATOR (COUPLING FLANGE) CAN BECOME VERY HOT, AVOID TOUCHING THEM SO AS NOT TO GET BURNT

OPERATION

- Bring to the ON position the mains switch A on the burner electrical board front panel.
- Check the flame control device is not in the lockout position (light B on), if necessary reset it by means of the pushbutton C (reset);
- Verify that the control thermostats or pressure switches give the consent to the burner to operate.
- Check the gas supply pressure is sufficient (light D on).

Only burners equipped with leakage control device: the check cycle of the leakage control device starts; the completion of this check is signalled by the light of the lamp on the device. When the valves check is finished, the start up cycle of the burner begins. In the case of a leak in a valve, the leakage control device locks and the lamp E lights.

To reset the device operate on the device pushbutton.

- When the startup cycle begins, the servocontrol drives the air damper to the maximum opening position, the fan motor starts and the pre-purgue phase begins.

During the pre-purgue phase, the complete opening of the air damper is signalled by the lamp F on the frontal panel of the electrical board.

- At the end of the pre-purgue phase, the air damper goes to the ignition position, the ignition transformer comes on (signalled by the lamp H) and 3 seconds later the solenoid valves EV1 and EV2 are energized (lights L and I on the front panel).
- 3 seconds after the opening of the valves, the ignition transformer comes off and the lamp H turns off; subsequently:

Single stage burners: the burner is on at the maximum power; the lights F and G are on;

High-low flame burners: the burner is on in low flame (light G is on); 8 seconds later the high flame operation begins and the burner switches automatically to high flame (light F is on) or remains in low flame operation, depending on the plant needs.

Fully modulating burners: after the posted time the modulating operation begins and the burner is driven by the modulator (P), depending on the needs of the plant; the light F is on until the modulator drives the burner to a rise of power.

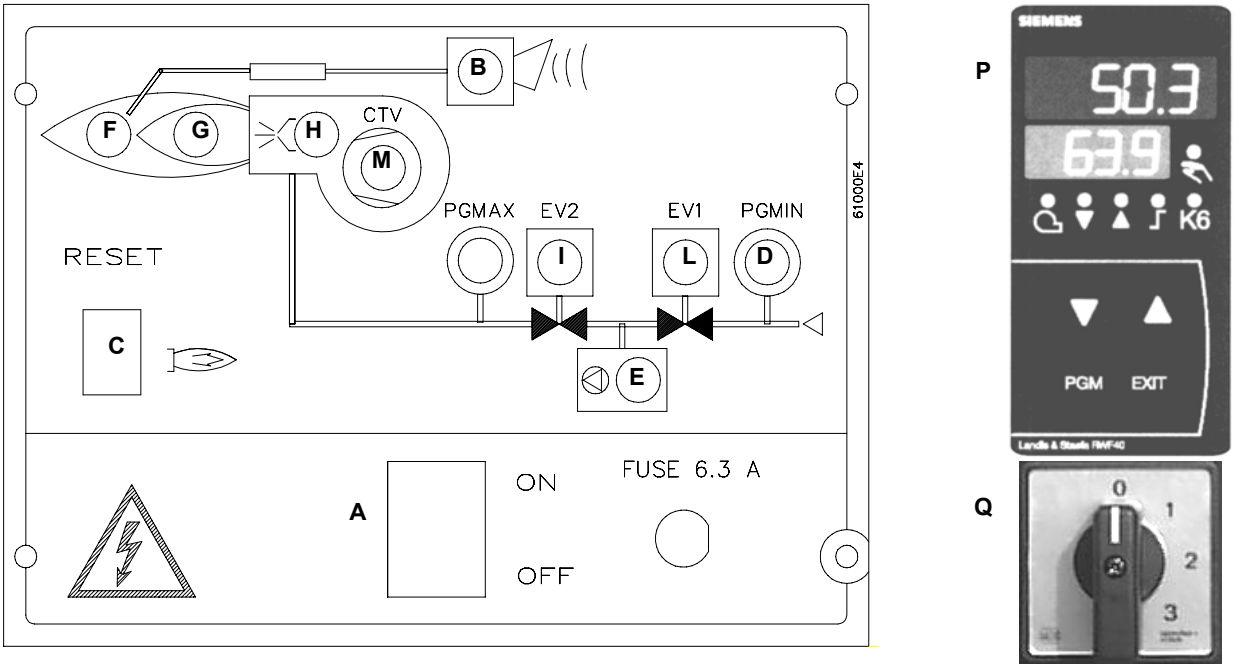

Fig. 57 - Electrical board front panel

Key

A main switch on-off
B lockout indicator light
C reset pushbutton for flame control device
D gas pressure switch consent indicator light
E leakage control device lockout indicator light (only on burners with leakage control device)
F high flame operation indicator light (or air damper open during pre-purgue phase)
G low flame operation indicator light
H ignition transformer operation indicator light
I valve in operation indicator light for EV2
L valve in operation indicator light for EV1
M indicator light for fan motor overload tripped (only three-phase burners); to reset the overload tripped, open the electrical board.
P modulator (fitted only on fully modulating burners)
Q operation manual selector: 0) stop - 1) high flame - 2) low flame - 3) automatic

PART III: MAINTENANCE MANUAL

At least once a year carry out the maintenance operations listed below. In the case of seasonal servicing, it is recommended to carry out the maintenance at the end of each heating season; in the case of continuous operation the maintenance is carried out every 6 months.

WARNING: All operations on the burner must be carried out with the mains disconnected!

PERIODICAL OPERATIONS

- Cleaning and examining the gas filter cartridge, if necessary replace it; (see on Page 22);
- Removal, examination and cleaning of the combustion head (see Fig. 58 - Fig. 59);
- Check of ignition electrode, cleaning, adjustment and, if necessary, replacement (see Fig. 60 - Fig. 61);
- Check of detection electrode, cleaning, adjustment and, if necessary, replacement (see Fig. 60 - Fig. 61); if in doubt check the detection circuit as shown in Fig. 62 - Fig. 63, with the burner in operation;
- Cleaning and greasing sliding and rotating parts.

NOTE: The check on the ignition and detection electrodes is carried out after removing the combustion head.

Removal of the combustion head

Fig. 58 - Burners P20 - P30 - P45 - P50

- Remove the lid C.
- Unscrew the 2 screws S which hold in position the washer, unscrew then the screw VRT, to free the threaded rod AR.
- Unscrew the screws V which lock the gas manifold G and extract the complete unit as shown in the figure.

Note: for subsequent assembly carry out the above described operations in the reverse order, having care to keep the OR ring in the correct position.

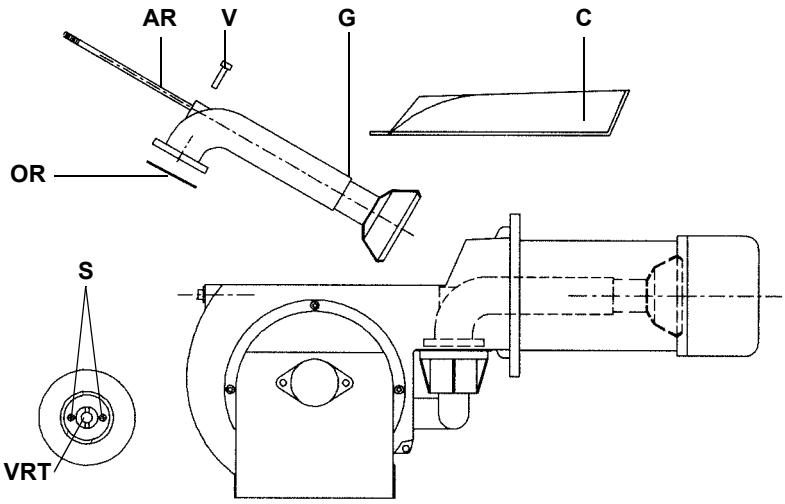

Fig. 58

Fig. 59 - Burners P65

- Remove the lid C.
- Unscrew the 2 screws V which hold in position the washer G and remove the complete set as shown in figure.

Note: for subsequent assembly carry out the above described operations in the reverse order, having care to keep the OR ring in the correct position.

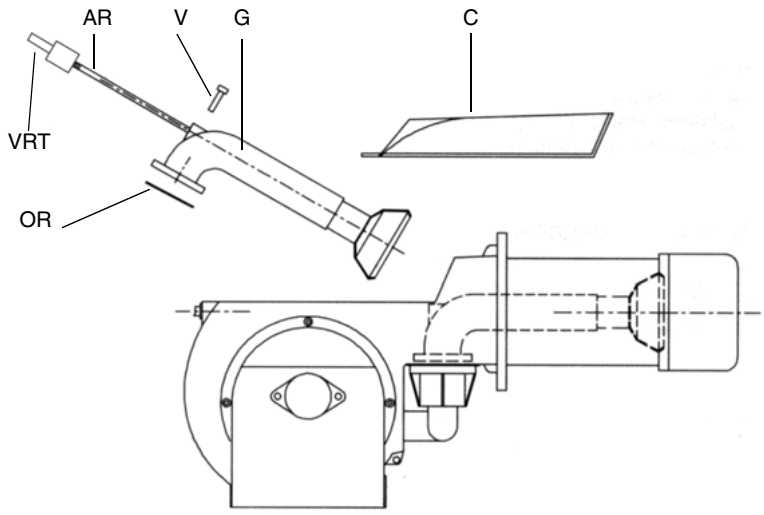

Fig. 59

Fig. 60 - Electrodes position setting P20 - P30 - P45

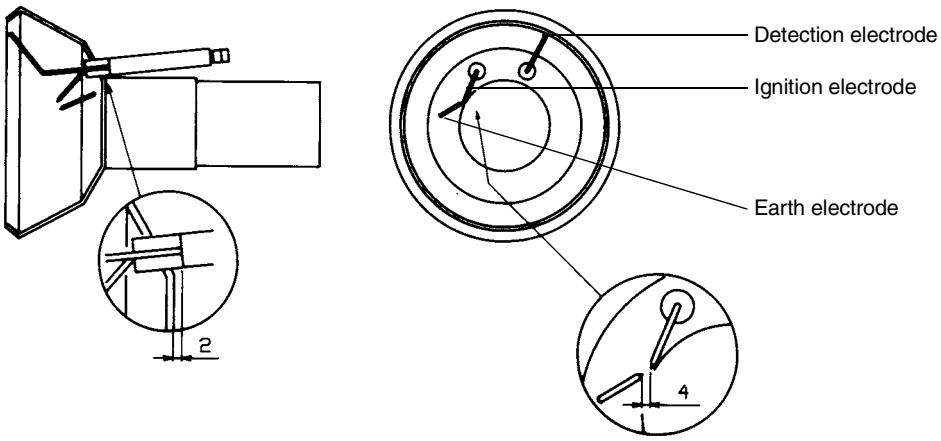

Fig. 61 - Electrodes position setting P50 - P65

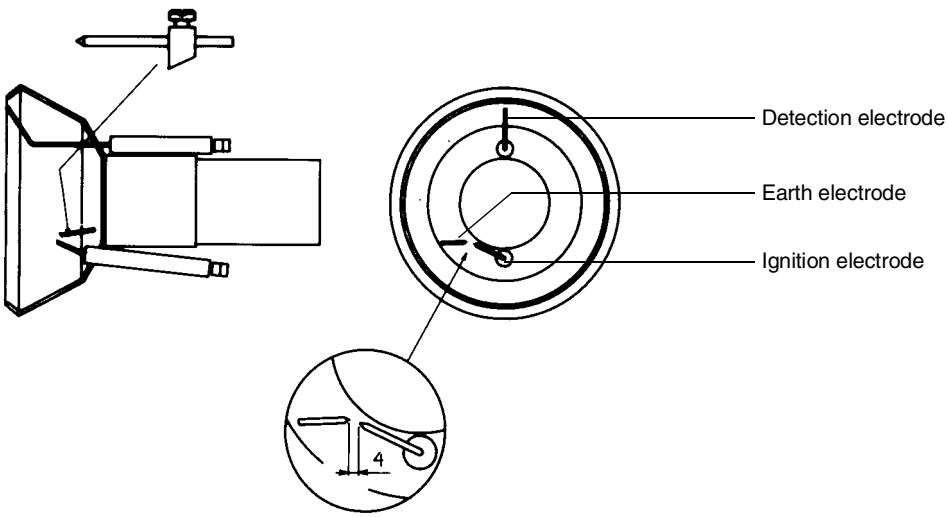

Check of ionisation current

To measure the detection signals refer to the diagrams in Fig. 62 - Fig. 63. If the signal is less than the value shown, check the position of the detection electrode, the electrical contacts and if necessary replace the detection electrode.

Fig. 62

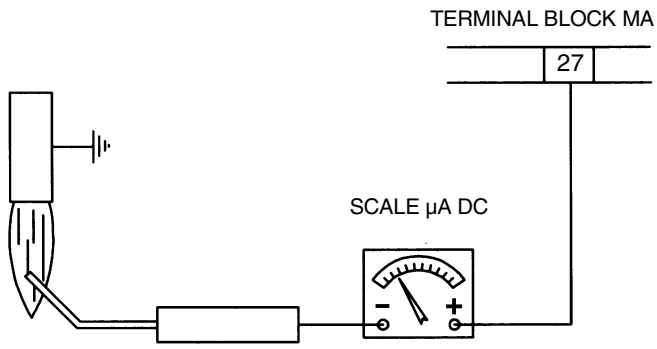

Fig. 63

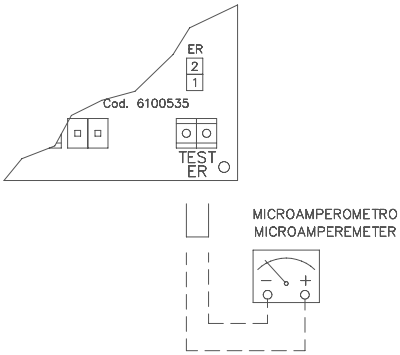

Flame control device	Minimum detection signal
Siemens LME21-22	3 µA

If the power supply to the burner is 230V three-phase or 230V phase-phase (without a neutral), with the Landis LGB2... o LMG2... flame control device, between the terminal 2 on the board and the earth terminal, an RC Landis RC466890660 filter must be inserted

Key
C - Capacitor (22nF/250V)
LGB - LMG - Landis flame control device
R - Resistor (1Mohm)
RC466890660 - RC Landis filter

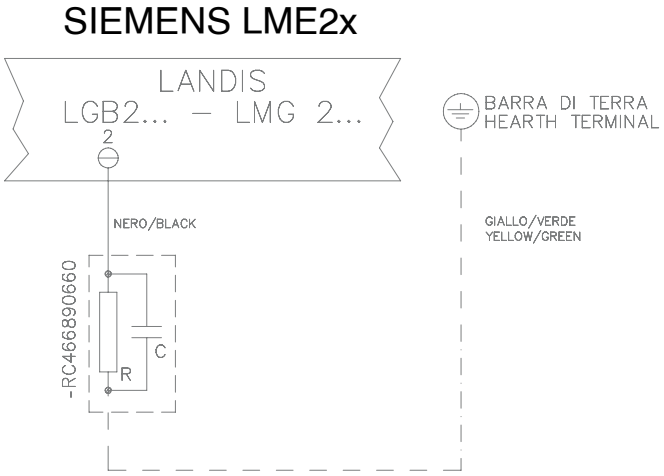

Fig. 64

TROUBLESHOOTING

CAUSE / FAULT	BURNER DOESN'T START	CONTINUE PRE-PURGUE	BURNER DOESN'T START AND LOCKS	BURNER DOESN'T START AND REPEATS THE CYCLE	BURNER STARTS AND REPEATS THE CYCLE	BURNER DOESN'T SWITCH TO HIGH FLAME	BURNER'S LOCKOUT DURING OPERATION	BURNER STOPS AND REPEATS CYCLE DURING OPERATION	BURNER'S LOCKOUT AFTER START	THE FLAME CONTROL DEV. REPEATS THE CYCLE WITHOUT GIVE CONSENT
MAINS SWITCH OPEN	●									
ABSENCE OF GAS	●									
MINIMUM GAS PRESSURE SWITCH FAULT OR BAD SETTING	●			●	●			●		
BOILER THERMOSTATS OPEN	●									
OVERLOAD TRIPPED INTERVENTION	●									
FUSES INTERVENTION	●									
AIR PRESSURE SWITCH FAULT OR BAD SETTING	●		●				●			●
DEFECTIVE FLAME CONTROL DEVICE	●	●	●				●			
DEFECTIVE AIR DAMPER SERVOCONTROL		●								
DEFECTIVE IGNITION TRANSFORMER			●							
IGNITION ELECTRODE WRONG POSITION			●							
BUTTERFLY VALVE BAD SETTING			●							
DEFECTIVE GAS GOVERNOR			●	●	●			●		
DEFECTIVE HI-LO FLAME THERMOSTAT						●				
SERVOCONTROL CAM BAD SETTING						●				
DETECTION ELECTRODE BAD POSITION OR DEFECTIVE DETECTION CIRCUIT							●		●	
REVERSED PHASE AND NEUTRAL CONNECTION									●	
PHASE-PHASE SUPPLY OR PRESENCE OF VOLTAGE ON NEUTRAL*									●	

* In this case insert an RC filter (see Fig. 64)

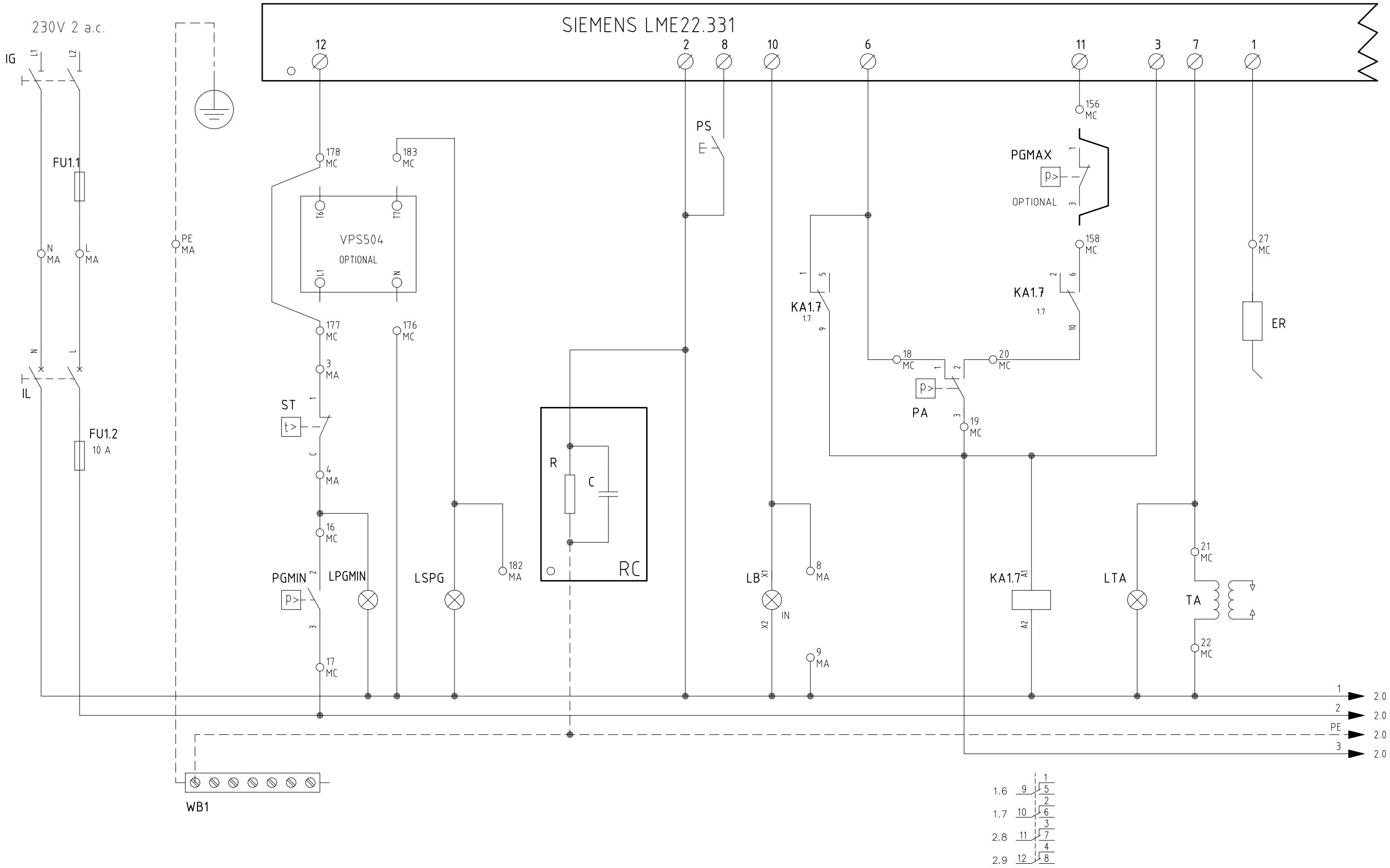

REV.	MODIFICA	DATA	FIRME
02	ADDED PREDISPOSITION "PGMAX"	19/09/17	U. PINTON
01	AGGIUNTO/ADDED SQN72.xxx	29/08/11	U. PINTON

UNIGAS

Impianto
TIPI/TYPES P20/P30
MODELLO/MODEL x–.AB(PR).x.xx.Y.x.xx

Descrizione
CON PILOTA; POST–VENTILAZ. TEMPORIZZ.; "PGMAX"
WITH GAS PILOT; DELAYED POST–PURGE; "PGMAX"

Ordine

Commessa

Esecutore: U. PINTON

Data Controllato: 19/09/2017

Controllato: T. BARALDO

Data: 05/12/2003

Revisione: 02

Dis. N. 04 – 0720

PREC.: /

FOGLIO: 1

SEGUE: 2

TOTALE: 4

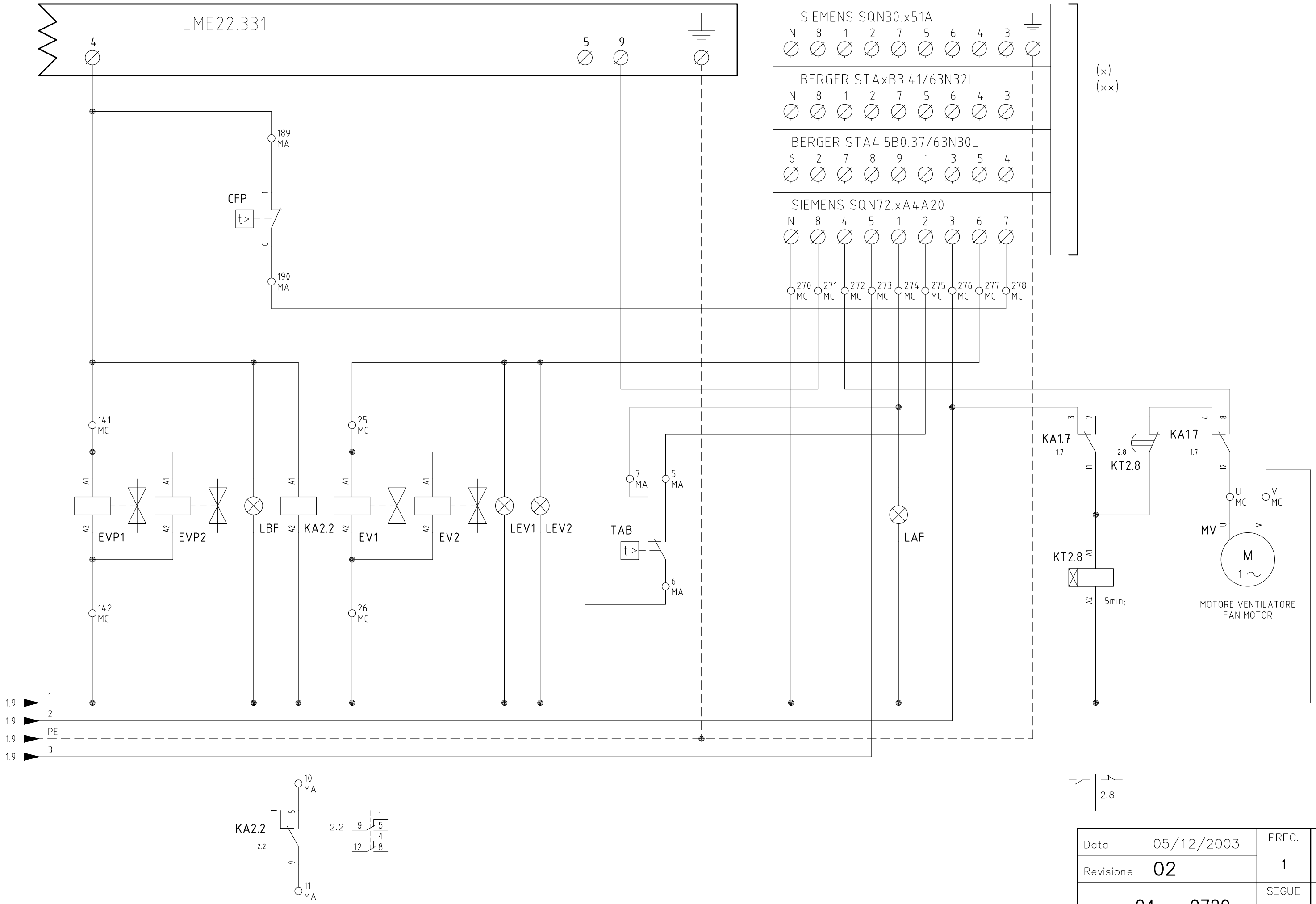

Data	05/12/2003	PREC.	FOGLIO
Revisione	02	1	2
Dis. N.	04 – 0720	SEGUE 3	TOTALE 4

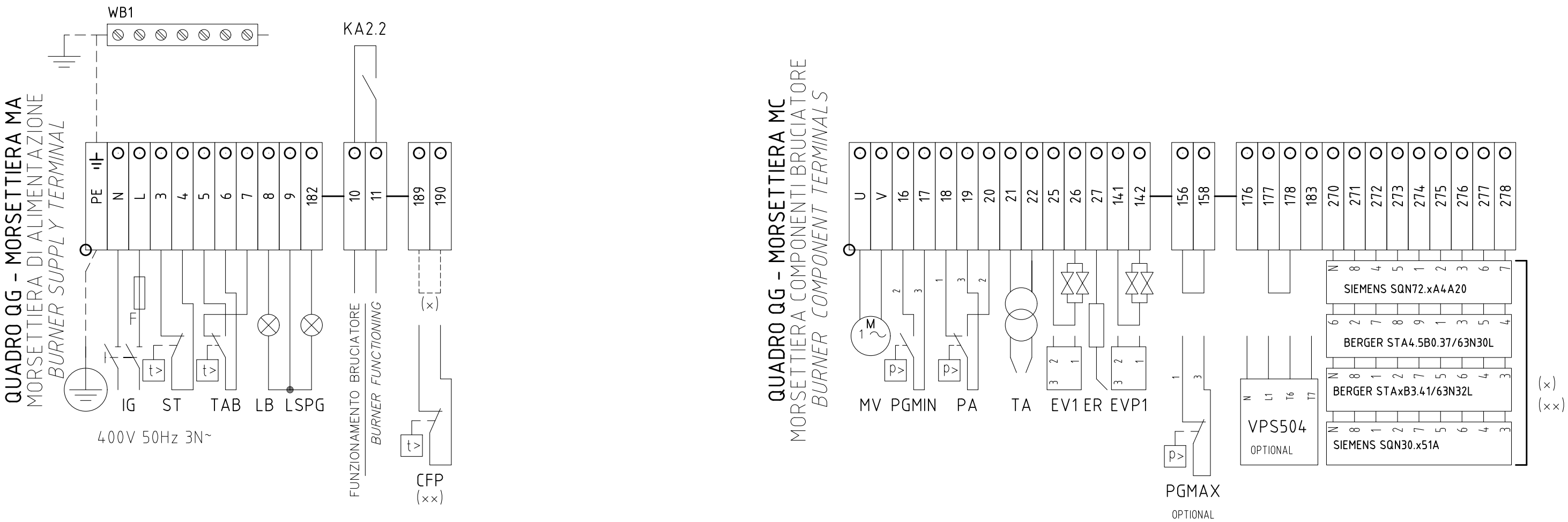

NOTE :

MARKS :

(x) SE "CFP" NON E' USATO, PONTICELLARE I MORSETTI 189-190. E REGOLARE LA CAMMA AUSILIARIA ("IV-SQN72","III-STA4.5"; "MV-STAx"; "V-SQN30") IN UNA POSIZIONE 5° > ALLA CAMMA DI BASSA FIAMMA. (ES.: BASSA FIAMMA = 20°; CAMMA AUSILIARIA TARATA A 25°)

(xx) SE "CFP" INVECE E' USATO, REGOLARE LA CAMMA AUSILIARIA ("IV-SQN72","III-STA4.5"; "MV-STAx"; "V-SQN30") = 0° .

(x) IF "CFP" IS NOT USED, INSERT BRIDGE BETWEEN TERMINALS 189-190. AND SET TO THE AUXILIARY CAM ("IV-SQN72","III-STA4.5"; "MV-STAx"; "V-SQN30") IN THE POSITION > OF 5° TO LOW FLAME CAM. (EX.: LOW FLAME CAM = 20° ; SET THE AUXILIARY CAM TO 25°)

(xx) IF "CFP" IS USED, SET THE AUXILIARY CAM ("IV-SQN72","III-STA4.5"; "MV-STAx"; "V-SQN30") = 0° .

SERVOCOMANDO SERRANDA ARIA
AIR DAMPER ACTUATOR
SIEMENS SQN72.xA4A20

I (ROSSO)	ALTA FIAMMA
I (RED)	*HIGH FLAME*
II (BLU)	SOSTA
II (BLUE)	*STAND-BY*
III (ARANCIO)	BASSA FIAMMA
III (ORANGE)	*LOW FLAME*
IV (NERO)	CAMMA AUSILIARIA APERTURA EV1, EV2
IV (BLACK)	*AUXILIARY CAM FOR OPENED EV1, EV2*

SERVOCOMANDO SERRANDA ARIA (ALTERNATIVO)
AIR DAMPER ACTUATOR (ALTERNATIVE)
BERGER STA4.5B0.37/63N30L

I	ALTA FIAMMA
	HIGH FLAME
II	SOSTA
	STAND-BY
IV	BASSA FIAMMA
	LOW FLAME
III	CAMMA AUSILIARIA APERTURA EV1, EV2
	AUXILIARY CAM FOR OPENED EV1, EV2

SERVOCOMANDO SERRANDA ARIA (ALTERNATIVO)
AIR DAMPER ACTUATOR (ALTERNATIVE)
BERGER STAxB3.41/63N32L

ST2	ALTA FIAMMA
	HIGH FLAME
ST0	SOSTA
	STAND-BY
ST1	BASSA FIAMMA
	LOW FLAME
MV	CAMMA AUSILIARIA APERTURA EV1, EV2
	AUXILIARY CAM FOR OPENED EV1, EV2

SERVOCOMANDO SERRANDA ARIA (ALTERNATIVO)
AIR DAMPER ACTUATOR (ALTERNATIVE)
SIEMENS SQN30.x51A

I	ALTA FIAMMA
	HIGH FLAME
II	SOSTA
	STAND-BY
III	BASSA FIAMMA
	LOW FLAME
V	CAMMA AUSILIARIA APERTURA EV1, EV2
	AUXILIARY CAM FOR OPENED EV1, EV2

Data 05/12/2003	PREC.	FOGLIO	
Revisione 02	2	3	
Dis. N. 04 – 0720	SEGUE	TOTALE	
	4	4	

0	1	2	3	4	5	6	7	8	9

Sigla/Item	Foglio/Sheet	Funzione	Function
BERGER STA4.5B0.37/63N30L	2	SERVOCOMANDO SERRANDA ARIA (ALTERNATIVO)	AIR DAMPER ACTUATOR (ALTERNATIVE)
BERGER STAxB3.41/63N32L	2	SERVOCOMANDO SERRANDA ARIA (ALTERNATIVO)	AIR DAMPER ACTUATOR (ALTERNATIVE)
C	1	CONDENSATORE	CAPACITOR
CFP	2	TERMOSTATO O PRESSOSTATO FIAMMA PILOTA	PILOT FLAME THERMOSTAT OR PRESSURE SWITCHES
ER	1	ELETTRODO RIVELAZIONE FIAMMA	FLAME DETECTION ELECTRODE
EV1	2	ELETTROVALVOLA GAS LATO RETE (O GRUPPO VALVOLE)	GAS ELECTRO-VALVE UPSTREAM (OR VALVES GROUP)
EV2	2	ELETTROVALVOLA GAS LATO BRUCIATORE (O GRUPPO VALVOLE)	GAS ELECTRO-VALVE DOWNSTREAM (OR VALVES GROUP)
EVP1	2	ELETTROVALVOLA GAS PILOTA LATO RETE (O GRUPPO VALVOLE)	PILOT GAS ELECTRO-VALVE UPSTREAM (OR VALVES GROUP)
EVP2	2	ELETTROVALVOLA GAS PILOTA LATO BRUCIATORE (O GRUPPO VALVOLE)	PILOT GAS ELECTRO-VALVE DOWNSTREAM (OR VALVES GROUP)
FU1.1	1	FUSIBILE LINEA AUSILIARI	AUXILIARY LINE FUSE
FU1.2	1	FUSIBILE	FUSE
IG	1	INTERRUTTORE GENERALE	MAIN DISCONNECTOR
IL	1	INTERRUTTORE LINEA AUSILIARI	AUXILIARY LINE SWITCH
KA1.7	1	RELE'' AUSILIARIO	AUXILIARY RELAY
KA2.2	2	RELE'' AUSILIARIO	AUXILIARY RELAY
KT2.8	2	RELE'' TEMPORIZZATORE	DELAYED RELAY
LAF	2	LAMPADA SEGNALAZIONE ALTA FIAMMA BRUCIATORE	BURNER IN HIGH FLAME INDICATOR LIGHT
LB	1	LAMPADA SEGNALAZIONE BLOCCO BRUCIATORE	INDICATOR LIGHT FOR BURNER LOCK-OUT
LBF	2	LAMPADA SEGNALAZIONE BASSA FIAMMA BRUCIATORE	BURNER IN LOW FLAME INDICATOR LIGHT
LEV1	2	LAMPADA SEGNALAZIONE APERTURA [EV1]	INDICATOR LIGHT FOR OPENING OF ELECTRO-VALVE [EV1]
LEV2	2	LAMPADA SEGNALAZIONE APERTURA [EV2]	INDICATOR LIGHT FOR OPENING OF ELECTRO-VALVE [EV2]
LPGMIN	1	LAMPADA SEGNALAZIONE PRESENZA GAS IN RETE	INDICATOR LIGHT FOR PRESENCE OF GAS IN THE NETWORK
LSPG	1	LAMPADA SEGNALAZIONE BLOCCO CONTROLLO TENUTA VALVOLE	INDICATOR LIGHT FOR LEAKAGE OF VALVES
LTA	1	LAMPADA SEGNALAZIONE TRASFORMATORE DI ACCENSIONE	IGNITION TRANSFORMER INDICATOR LIGHT
MV	2	MOTORE VENTILATORE	FAN MOTOR
PA	1	PRESSOSTATO ARIA COMBURENTE	COMBUSTION AIR PRESSURE SWITCH
PGMAX	1	PRESSOSTATO GAS DI MASSIMA PRESSIONE (OPTIONAL)	MAXIMUM PRESSURE GAS SWITCH (OPTIONAL)
PGMIN	1	PRESSOSTATO GAS DI MINIMA PRESSIONE	MINIMUM GAS PRESSURE SWITCH
PS	1	PULSANTE SBLOCCO FIAMMA	LOCK-OUT RESET BUTTON
R	1	RESISTENZA	RESISTANCE
RC	1	CIRCUITO RC	RC CIRCUIT
SIEMENS LME22.331	1	APPARECCHIATURA CONTROLLO FIAMMA	FLAME MONITOR DEVICE
SIEMENS SQN30.x51A	2	SERVOCOMANDO SERRANDA ARIA (ALTERNATIVO)	AIR DAMPER ACTUATOR (ALTERNATIVE)
SIEMENS SQN72.xA4A20	2	SERVOCOMANDO SERRANDA ARIA	AIR DAMPER ACTUATOR
ST	1	SERIE TERMOSTATI/PRESSOSTATI	SERIES OF THERMOSTATS OR PRESSURE SWITCHES
TA	1	TRASFORMATORE DI ACCENSIONE	IGNITION TRANSFORMER
TAB	2	TERMOSTATO/PRESSOSTATO ALTA-BASSA FIAMMA	HIGH-LOW THERMOSTAT/PRESSURE SWITCHES
VPS504	1	CONTROLLO DI TENUTA VALVOLE GAS (OPTIONAL)	GAS LEAKAGE MONITOR DEVICE (OPTIONAL)
WB1	1	BARRA DI TERRA	EARTH TERMINAL

SPARE PARTS - Burners P20 - P30 M-.TN, M-.AB

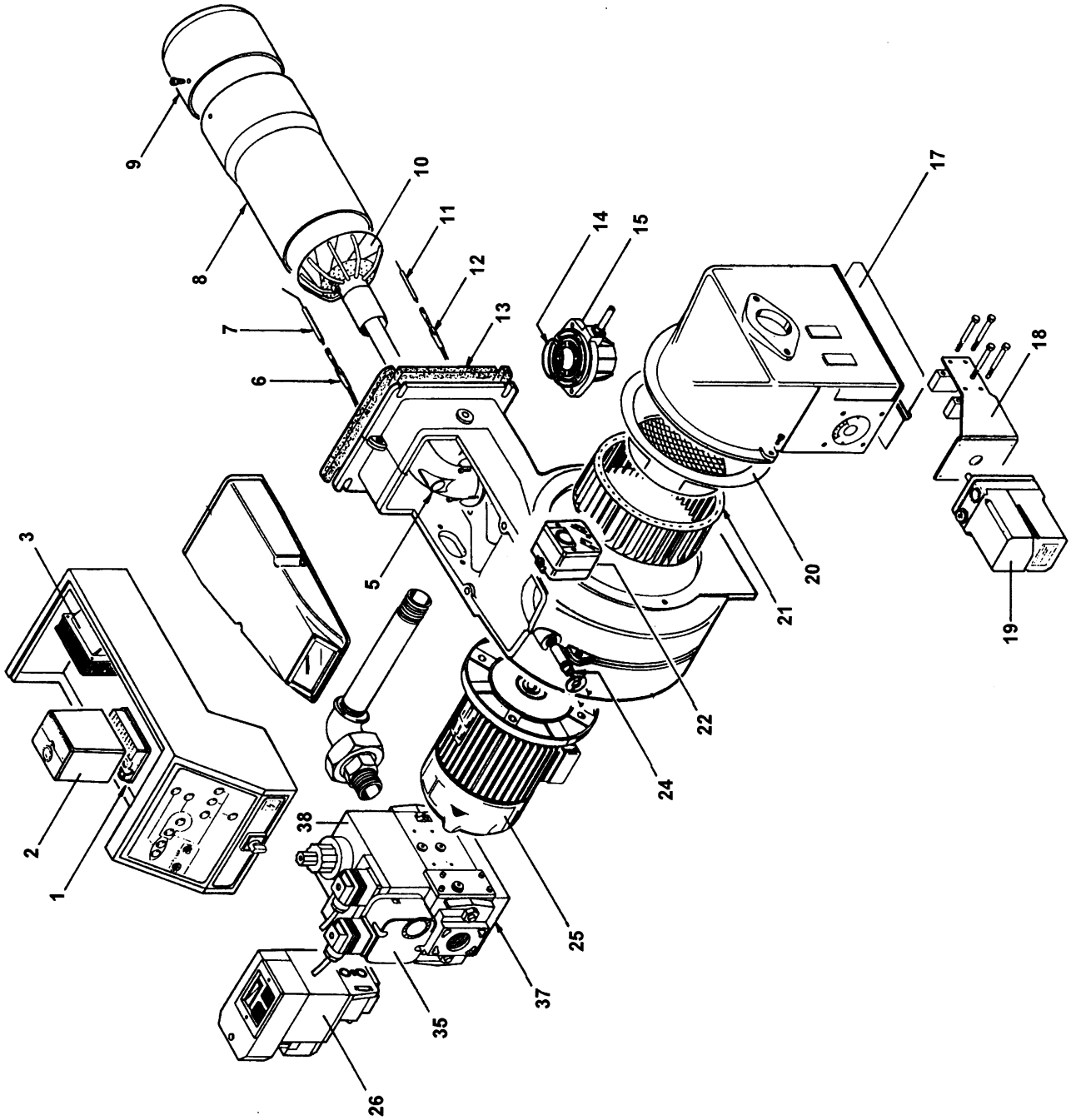

POS.	DESCRIPTION	P20 M-.XX.S.*.A.0.25	P20 M-.XX.L.*.A.0.25	P20 M-.XX.S.*.A.0.40	P20 M-.XX.L.*.A.0.40	P30 M-.XX.S.*.A.0.40	P30 M-.XX.L.*.A.0.40
1	SOCKET FOR FLAME CONTROL DEVICE	2030415	2030415	2030415	2030415	2030415	2030415
2	FLAME CONTROL DEVICE LGB21 (SINGLE STAGE)	2020443	2020443	2020443	2020443	2020443	2020443
2	FLAME CONTROL DEVICE LGB22 (HI-LO FLAME)	2020430	2020430	2020430	2020430	2020430	2020430
2	FLAME CONTROL DEVICE LMG21 (SINGLE STAGE)	2020449	2020449	2020449	2020449	2020449	2020449
2	FLAME CONTROL DEVICE LMG22 (HI-LO FLAME)	2020450	2020450	2020450	2020450	2020450	2020450
3	TANSFORMER	2170128	2170128	2170128	2170128	2170128	2170128
5	MANIFOLD	2740002	2740002	2740002	2740002	2740002	2740002
6	DETECTION CABLE	6050205	6050205	6050205	6050205	6050205	6050205
7	DETECTION ELECTRODE	2080106	2080106	2080106	2080106	2080102	2080102
8	COMPLETE BLAST TUBE	3090096	3090086	3090096	3090086	3090019	3091005
9	BLAST TUBE EXTENSION	---	---	---	---	---	2200046
10	COMBUSTION HEAD	3060073	3060072	3060073	3060072	3060005	3060005
11	IGNITION ELECTRODE	2080209	2080209	2080209	2080209	2080202	2080202
12	IGNITION CABLE	6050108	6050108	6050108	6050108	6050108	6050108
13	GASKET	2110004	2110004	2110004	2110004	2110004	2110004
14	"O" RING	2250001	2250001	2250001	2250001	2250001	2250001
15	THROTTLE VALVE (HI-LO FLAME)	2460221	2460221	2460221	2460221	2460221	2460221
15A	THROTTLE VALVE (SINGLE STAGE)	2460201	2460201	2460201	2460201	2460201	2460201
17	AIR DAMPER	2140005	2140005	2140005	2140005	2140005	2140005
18	SERVOC. SUPPORT BRACKET (HI-LO FLAME)	3050009	3050009	3050009	3050009	3050009	3050009
19	SERVOCONTROL (BERGER, VERS. HI-LO FLAME)	2480057	2480057	2480057	2480057	2480057	2480057
20	INLET CONE	2040016	2040016	2040016	2040016	2040016	2040016
21	FAN	2150006	2150006	2150006	2150006	2150006	2150006
22	AIR PRESSURE SWITCH	2140065	2140065	2140065	2140065	2140065	2140065
24	HEAD ADJUSTING SCREW	2320501	2320501	2320501	2320501	2320501	2320501
25	MOTOR	2180704	2180704	2180704	2180704	2180704	2180704
26	LEAKAGE CONTROL (OPTIONAL)	2191604	2191604	2191604	2191604	2191604	2191604
35	MINIMUM GAS PRESSURE SWITCH	2160052	2160052	2160052	2160052	2160052	2160052
37	MULTIBLOC VALVES GROUP	2190341	2190341	2190342	2190342	2190342	2190342
	PRINTED CIRCUIT	6100535	6100535	6100535	6100535	6100535	6100535
38	MULTIBLOC COIL	2580017	2580017	2580017	2580017	2580017	2580017

SPARE PARTS - Burners P45 M-.TN..., M-.AB, P50 M-.TN, P65 M-.AB

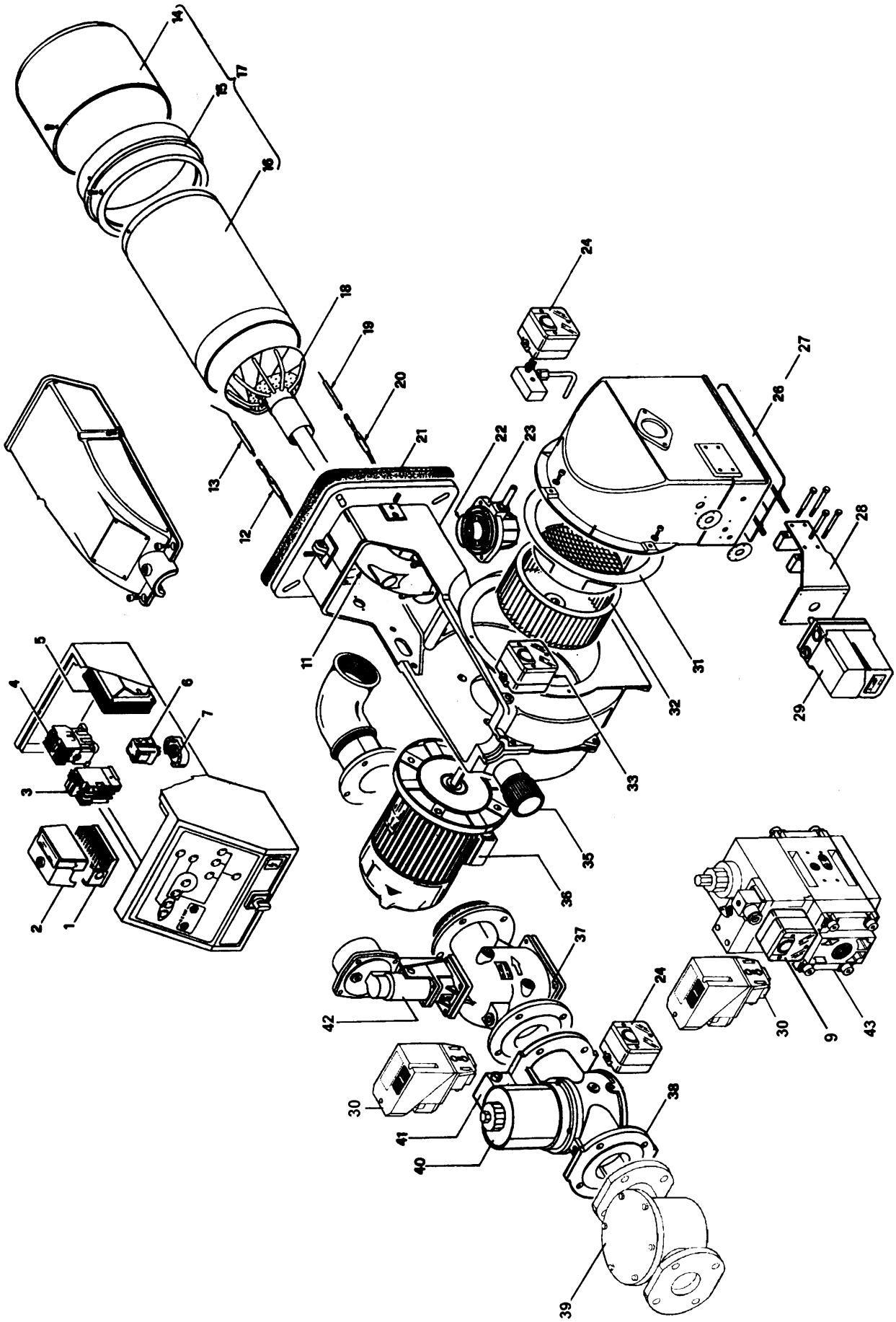

POS.	DESCRIPTION	P45 M-.TN..S.. .40 M-.TN..L.. .40	P45 M-.TN..S.. .50 M-.TN..L.. .50	P45 M-.AB..S.. .40 M-.AB..L.. .40	P45 M-.AB..S.. .50 M-.AB..L.. .50	P50 M-.TN..S.. .40 M-.TN..L.. .40	P50 M-.TN..S.. .50 M-.TN..L.. .50	P50 M-.TN..S.. .65 M-.TN..L.. .65	P65 M-.AB..S.. .50 M-.AB..L.. .50	P65 M-.AB..S.. .65 M-.AB..L.. .65
1	SOCKET FOR FLAME CONTROL DEVICE	203.04.15	203.04.15	203.04.15	203.04.15	203.04.15	203.04.15	203.04.15	203.04.15	203.04.15
2	CONTROL DEVICE LGB21 (SINGLE STAGE)	202.04.43	202.04.43			202.04.43	202.04.43	202.04.43		
2	CONTROL DEVICE LGB22 (HI-LO FLAME)			202.04.30	202.04.30				202.04.30	202.04.30
2	CONTROL DEVICE LMG21 (SINGLE STAGE)	202.04.49	202.04.49			202.04.49	202.04.49	202.04.49		
2	CONTROL DEVICE LMG22 (HI-LO FLAME))			202.04.50	202.04.50				202.04.50	202.04.50
3	OVERLOAD RELAY	---	---	---	---	614.00.32	614.00.32	614.00.32	614.00.32	614.00.32
4	CONTACTOR	---	---	---	---	613.00.16	613.00.16	613.00.16	613.00.16	613.00.16
5	IGNITION TRANSFORMER	217.01.28	217.01.28	217.01.28	217.01.28	217.01.28	217.01.28	217.01.28	217.01.28	217.01.28
6	RELAY	---	---	---	---	---	---	---	---	---
7	RELAY SOCKET	---	---	---	---	---	---	---	---	---
9	GAS PRESSURE SWITCH	216.00.76	216.00.76	216.00.76	216.00.76	216.00.76	216.00.76	---	216.00.76	---
11	MANIFOLD	274.00.02	274.00.02	274.00.02	274.00.02	274.00.03	274.00.03	274.00.03	274.00.03	274.00.03
12	DETECTION CABLE	605.02.05	605.02.05	605.02.05	605.02.05	605.02.05	605.02.05	605.02.05	605.02.05	605.02.05
13	DETECTION ELECTRODE	208.01.02	208.01.02	208.01.02	208.01.02	208.01.02	208.01.02	208.01.02	208.01.02	208.01.02
14	STANDARD BLAST TUBE EXTENSION	---	---	---	---	220.00.55	220.00.55	220.00.55	220.00.55	220.00.55
14	LONG BLAST TUBE EXTENSION	220.00.46	220.00.46	220.00.46	220.00.46	220.00.56	220.00.56	220.00.56	220.00.56	220.00.56
15	BLAST TUBE RING	---	---	---	---	247.00.37	247.00.37	247.00.37	247.00.37	247.00.37
16	BLAST TUBE BODY	---	---	---	---	230.00.35	230.00.35	230.00.35	230.00.55	230.00.55
17	STANDARD BLAST TUBE - COMPLETE	309.00.39	309.00.39	309.00.39	309.00.39	309.10.60	309.10.60	309.10.60	309.10.E9	309.10.E9
17	LONG BLAST TUBE - COMPLETE	309.10.F1	309.10.F1	309.10.F1	309.10.F1	309.10.61	309.10.61	309.10.61	309.10.E0	309.10.E0
18	COMBUSTION HEAD	306.00.C1	306.00.C1	306.00.C1	306.00.C1	306.00.78	306.00.78	306.00.78	306.00.C2	306.00.C2
19	IGNITION ELECTRODE	208.02.02	208.02.02	208.02.02	208.02.02	208.02.02	208.02.02	208.02.02	208.02.02	208.02.02
20	IGNITION CABLE	605.01.08	605.01.08	605.01.08	605.01.08	605.01.08	605.01.08	605.01.08	605.01.08	605.01.08
21	GASKET	211.00.13	211.00.13	211.00.13	211.00.13	211.00.13	211.00.13	211.00.13	211.00.33	211.00.33
22	RING "OR" FOR THROTTLE VALVE	225.00.03	225.00.03	225.00.03	225.00.03	225.00.03	225.00.03	225.00.03	225.00.03	225.00.03
23	THROTTLE VALVE	246.02.22	246.02.22	246.02.22	246.02.22	246.02.32	246.02.32	246.02.33	246.02.22	246.02.24
24	GAS PRESSURE SWITCH	216.00.10	216.00.10	216.00.10	216.00.10	218.02.55.01	218.02.55.01	218.02.55.01	218.02.03.01	218.02.03.01
26	INTERNAL AIR DAMPER	214.00.07	214.00.07	214.00.07	214.00.07	214.00.07	214.00.07	214.00.07	214.00.22	214.00.22
27	ESTERNAL AIR DAMPER	---	---	---	---	---	---	---	214.00.23	214.00.23
28	SERVOCONTROL SUPPORT BRACKET	---	---	305.00.09	305.00.09	---	---	---	305.00.10	305.00.10
29	SERVOCONTROL	---	---	248.00.42	248.00.42	---	---	---	248.00.42	248.00.42
30	LEAKAGE CONTROL	219.16.04	219.16.04	219.16.04	219.16.04	219.16.04	219.16.04	219.16.04	219.16.04	219.16.04
31	AIR INLET	204.00.17	204.00.17	204.00.17	204.00.17	204.00.17	204.00.17	204.00.17	204.00.11	204.00.11
32	FAN	215.00.21	215.00.21	215.00.21	215.00.21	215.00.21	215.00.21	215.00.21	215.00.18	215.00.18
33	AIR PRESSURE SWITCH	216.00.65	216.00.65	216.00.65	216.00.65	216.00.65	216.00.65	216.00.65	216.00.65	216.00.65
35	HEAD ADJUSTING KNOB	232.05.02	232.05.02	232.05.02	232.05.02	232.05.02	232.05.02	232.05.02	232.05.03	232.05.03
36	ELECTRIC MOTOR	218.00.91	218.00.91	218.00.91	218.00.91	218.02.55	218.02.55	218.02.55	218.02.03	218.02.03
37	GAS SOLENOID VALVE EV2	---	---	---	---	---	---	219.01.51	---	219.01.51
38	GAS SOLENOID VALVE EV1	---	---	---	---	---	---	219.03.21	---	219.03.21
39	GAS FILTER	---	---	---	---	---	---	209.01.17	---	209.01.17
40	COIL FOR EV1	---	---	---	---	---	---	258.00.05	---	258.00.05
41	PRINTED CIRCUIT FOR EV1	---	---	---	---	---	---	253.01.05	---	253.01.05
42	ACTUATOR WITH STABILIZER	---	---	---	---	---	---	219.01.20	---	219.01.20
43	MULTIBLOC VALVES GROUP	219.03.E9	219.03.E0	219.03.E9	219.03.E0	219.03.E9	219.03.E0	---	219.03.E0	---
	PRINTED CIRCUIT FOR ELECTRIC BOARD	610.05.35	610.05.35	610.05.35	610.05.35	610.05.35	610.05.35	610.05.35	610.05.35	610.05.35

SPARE PARTS - Burners P20 - P30 M-.MD...

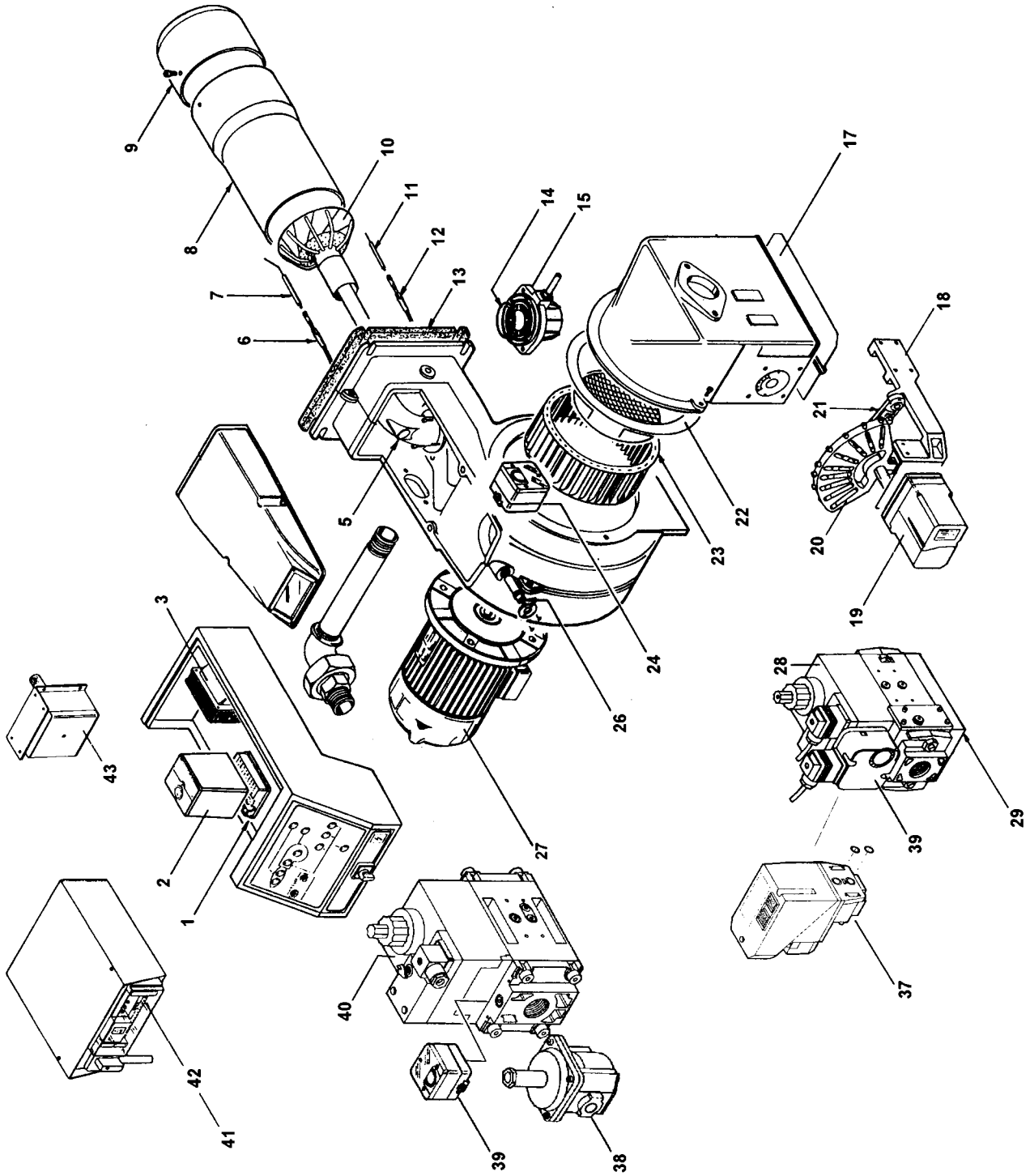

POS.	DESCRIPTION	P20 M-.MD.S.*.A.0.25	P20 M-.MD.L.*.A.0.25	P20 M-.MD.S.*.A.0.40	P20 M-.MD.L.*.A.0.40	P30 M-.MD.S.*.A.0.40	P30 M-.MD.L.*.A.0.40
1	SOCKET FOR FLAME CONTROL DEVICE	203.04.15	203.04.15	203.04.15	203.04.15	203.04.15	203.04.15
2	FLAME CONTROL DEVICE LANDIS LGB22	202.04.30	202.04.30	202.04.30	202.04.30	202.04.30	202.04.30
2	FLAME CONTROL DEVICE LANDIS LMG22	202.04.50	202.04.50	202.04.50	202.04.50	202.04.50	202.04.50
3	TRANSFORMER	217.01.02	217.01.02	217.01.02	217.01.02	217.01.02	217.01.02
5	MANIFOLD	274.00.02	274.00.02	274.00.02	274.00.02	274.00.02	274.00.02
6	DETECTION CABLE	605.02.05	605.02.05	605.02.05	605.02.05	605.02.05	605.02.05
7	DETECTION ELECTRODE	208.01.06	208.01.06	208.01.06	208.01.06	208.01.02	208.01.02
8	COMPLETE BLAST TUBE	309.00.96	309.00.86	309.00.96	309.00.86	309.00.19	309.10.05
9	BLAST TUBE EXTENSION	---	---	---	---	---	220.00.46
10	COMBUSTION HEAD	306.00.73	306.00.72	306.00.73	306.00.72	306.00.05	306.00.05
11	IGNITION ELECTRODE	208.02.09	208.02.09	208.02.09	208.02.09	208.02.02	208.02.02
12	IGNITION CABLE	60.01.08	605.01.08	605.01.08	605.01.08	605.01.08	605.01.08
13	GASKET	211.00.04	211.00.04	211.00.04	211.00.04	211.00.04	211.00.04
14	"O" RING	225.00.01	225.00.01	225.00.01	225.00.01	225.00.01	225.00.01
15	THROTTLE VALVE	246.02.21	246.02.21	246.02.21	246.02.21	246.02.21	246.02.21
17	AIR DAMPER	214.00.05	214.00.05	214.00.05	214.00.05	214.00.05	214.00.05
18	SERVOCONTROL SUPPORT BRACKET	305.00.11	305.00.11	305.00.11	305.00.11	305.00.11	305.00.11
19	SERVOCONTROL (BERGER)	248.00.53	248.00.53	248.00.53	248.00.53	248.00.53	248.00.53
20	ADJUSTABLE CAM	244.00.29	244.00.29	244.00.29	244.00.29	244.00.29	244.00.29
21	LEVER	244.00.15	244.00.15	244.00.15	244.00.15	244.00.15	244.00.15
22	INLET CONE	204.00.16	204.00.16	204.00.16	204.00.16	204.00.16	204.00.16
23	FAN	215.00.06	215.00.06	215.00.06	215.00.06	215.00.06	215.00.06
24	AIR PRESSURE SWITCH	216.00.65	216.00.65	216.00.65	216.00.65	216.00.65	216.00.65
26	HEAD ADJUSTING SCREW	232.05.01	232.05.01	232.05.01	232.05.01	232.05.01	232.05.01
27	MOTOR	218.07.04	218.07.04	218.07.04	218.07.04	218.07.04	218.07.04
28	MULTIBLOC COIL	258.00.17	258.00.17	258.00.17	258.00.17	258.00.17	258.00.17
29	MULTIBLOC VALVES GROUP	219.03.41	219.03.41	219.03.42	219.03.42	219.03.42	219.03.42
37	LEAKAGE CONTROL VPS504 (OPTIONAL)	219.16.04	219.16.04	219.16.04	219.16.04	219.16.04	219.16.04
39	MINIMUM GAS PRESSURE SWITCH	216.00.52	216.00.52	216.00.52	216.00.52	216.00.52	216.00.52
41	MODULATOR	257.00.34	257.00.34	257.00.34	257.00.34	257.00.34	257.00.34
42	FIELD ADAPTER	256.01..	256.01..	256.01..	256.01..	256.01..	256.01..
43	MODULATION PROBE	256.01..	256.01..	256.01..	256.01..	256.01..	256.01..

SPARE PARTS - Burners P45 - P65 M-.MD

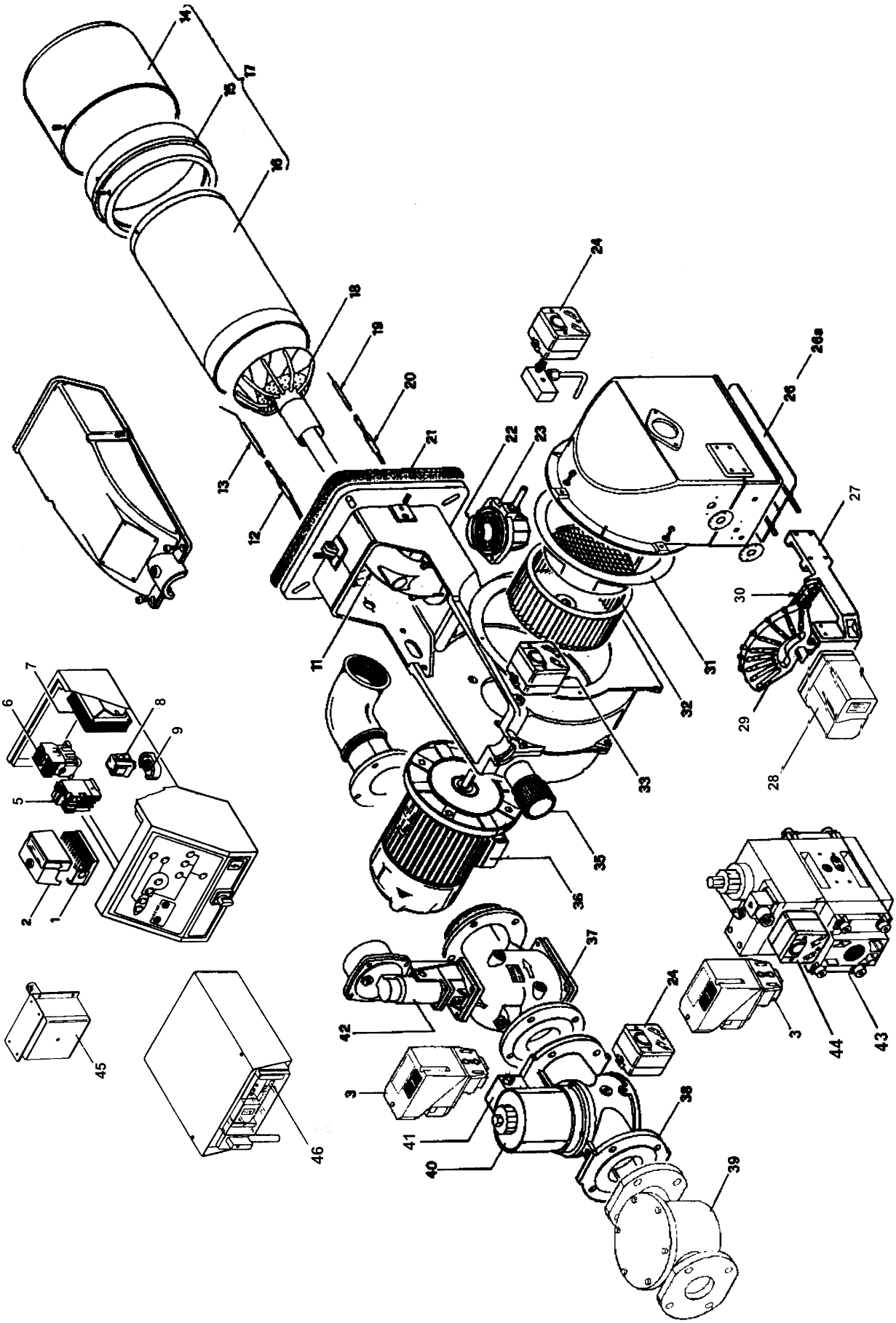

POS.	DESCRIPTION	P45 M-.MD..S...40 M-.MD..L...40	P45 M-.MD..S...50 M-.MD..L...50	P65 M-.MD..S...50 M-.MD..L...50	P65 M-.MD..S...65 M-.MD..L...65
1	FLAME CONTROL DEVICE SOCKET	203.04.15	203.04.15	203.04.15	203.04.15
2	FLAME CONTROL DEVICE LANDIS LGB22	202.04.30	202.04.30	202.04.30	202.04.30
2	FLAME CONTROL DEVICE LANDIS LMG22	202.04.50	202.04.50	202.04.50	202.04.50
3	LEAKAGE CONTROL	219.16.04	219.16.04	219.16.04	219.16.04
5	OVERLOAD RELAY	---	---	614.00.32	614.00.32
6	CONTACTOR	---	---	613.00.16	613.00.16
7	IGNITION TRANSFORMER	217.01.02	217.01.02	217.01.02	217.01.02
8	RELAY	---	---	---	---
9	RELAY SOCKET	---	---	---	---
11	MANIFOLD	274.00.02	274.00.02	274.00.03	274.00.03
12	DETECTION CABLE	605.02.05	605.02.05	605.02.05	605.02.05
13	DETECTION ELECTRODE	208.01.02	208.01.02	208.01.02	208.01.02
14	STANDARD BLAST TUBE EXTENSION	---	---	220.00.55	220.00.55
14	LONG BLAST TUBE EXTENSION	220.00.46	220.00.46	220.00.56	220.00.56
15	BLAST TUBE RING	---	---	247.00.37	247.00.37
16	BLAST TUBE BODY	---	---	230.00.55	230.00.55
17	COMPLETE BLAST TUBE - STANDARD	309.00.39	309.00.39	309.10.E9	309.10.E9
17	COMPLETE BLAST TUBE - LONG	309.10.F1	309.10.F1	309.10.E0	309.10.E0
18	COMBUSTION HEAD	306.00.C1	306.00.C1	306.00.C2	306.00.C2
19	IGNITION ELECTRODE	208.02.02	208.02.02	208.02.02	208.02.02
20	IGNITION CABLE	605.01.08	605.01.08	605.01.08	605.01.08
21	GASKET	211.00.13	211.00.13	211.00.33	211.00.33
22	OR RING FOR THROTTLE VALVE	225.00.03	225.00.03	225.00.03	225.00.03
23	THROTTLE VALVE	246.02.22	246.02.22	246.02.22	246.02.24
24	GAS PRESSURE SWITCH	216.00.10	216.00.10	216.00.10	216.00.10
26	INTERNAL AIR DAMPER	214.00.07	214.00.07	214.00.22	214.00.22
26A	EXTERNAL AIR DAMPER	---	---	214.00.23	214.00.23
27	SERVOCONTROL SUPPORT BRACKET	305.00.11	305.00.11	305.00.12	305.00.12
28	SERVOCONTROL	248.00.53	248.00.53	248.00.53	248.00.53
29	ADJUSTABLE CAM	244.00.29	244.00.29	244.00.29	244.00.29
30	COMPLETE LEVER	244.00.15	244.00.15	244.00.15	244.00.15
31	INLET CONE	204.00.17	204.00.17	204.00.11	204.00.11
32	FAN	215.00.21	215.00.21	215.00.18	215.00.18
33	AIR PRESSURE SWITCH	216.00.65	216.00.65	216.00.65	216.00.65
35	HEAD ADJUSTING KNOB	232.05.02	232.05.02	232.05.03	232.05.03
36	ELECTRIC MOTOR	218.02.03.01	218.02.03.01	218.02.03.01	218.02.03.01
37	GAS SOLENOID VALVE EV2	---	---	---	219.01.51
38	GAS SOLENOID VALVE EV1	---	---	---	219.03.21
39	GAS FILTER	---	---	---	209.01.17
40	COIL FOR EV1	---	---	---	258.00.05
41	PRINTED CIRCUIT FOR EV1	---	---	---	253.01.05
42	ACTIVATOR WITH STABILIZER	---	---	---	219.01.20
43	MULTIBLOC VALVES GROUP	219.03.E9	219.03.E0	219.03.E0	---
44	GAS PRESSURE SWITCH	216.00.76	216.00.76	216.00.76	---
45	MODULATOR PROBE	256.01..	256.01..	256.01..	256.01..
46	MODULATOR RWF40	257.00.34	257.00.34	257.00.34	257.00.34
46	FIELD ADAPTER	257.01.12	257.01.12	257.01.12	257.01.12
46A	FLAME CONTROL DEVICE SOCKET	256.01..	256.01..	256.01..	256.01..

SIEMENS LME11/21/22 CONTROL BOX

The series of equipment LME.. is used for the starup and supervisione of 1- or 2- stage gas burners. The series LME.. is interchangeable with the series LGB.. and LMG.., all diagrams and accessories are interchangeable.

Comparative table

LGB Series	LMG Series	LME Series
---	LMG 25.33	LME 11.33
LGB 21.33	LMG 21.33	LME 21.33
LGB 22.33	LMG 22.33	LME 22.33

Preconditions for burner startup

- Burner control must be reset
- All contacts in the line are closed, request for heat
- No undervoltage
- Air pressure switch LP must be in its “no-load” position
- Fan motor or AGK25 is closed
- Flame detector is darkened and there is no extraneous light

Undervoltage

Safety shutdown from the operating position takes place should mains voltage drop below about AC 175 V (at UN = AC 230 V)

Restart is initiated when mains voltage exceeds about AC 185 V (at UN = AC 230 V).

Controlled intermittent operation

After no more than 24 hours of continuous operation, the burner control will initiate automatic controlled shutdown followed by a restart.

Reversed polarity protection with ionization

If the connections of live conductor (terminal 12) and neutral conductor (terminal 2) aremixed up, the burner control will initiate lockout at the end of the safety time “TSA”.

Control sequence in the event of fault

If lockout occurs, the outputs for the fuel valves, the burner motor and the ignition equipment will immediately be deactivated (< 1 second).

Operational status indication

In normal operation, the different operating states are showed by means of the multicolor LED, inside the lockout reset button:

LED: **red LED** **yellow LED** **green LED**	..... Steady on ❍... Off

During startup, status indication takes place according to the table:

Status	Color code	Color
Waiting time tw, other waiting states	❍.....	Off
Ignition phase, ignition controlled	● ❍ ● ❍ ● ❍ ● ❍ ● ❍ ●	Flashing yellow
Operation, flame ok	□.....	Green
Operation, flame not ok	□ ❍ □ ❍ □ ❍ □ ❍ □ ❍	Flashing green
Extraneous light on burner startup	□ ▲ □ ▲ □ ▲ □ ▲ □ ▲	Green - red
Undervoltage	● ▲ ● ▲ ● ▲ ● ▲ ● ▲	Yellow - red
Fault, alarm	▲.....	Red
Error code output (refer to “Error code table”)	▲❍ ▲❍ ▲❍ ▲❍	Flashing red

START-UP PROGRAM

As far as the startup program, see its time diagram:

A Start command (switching on)

This command is triggered by control thermostat / pressure controller «R». Terminal 12 receives voltage and the programming mechanism starts running. On completion of waiting time «tw» with the LME21..., or after air damper «SA» has reached the nominal load position (on completion of «t11») with the LME22..., fan motor «M» will be started.

tw Waiting time

During the waiting time, air pressure monitor «LP» and flame relay «FR» are tested for correct contact positions.

t11 Programmed opening time for actuator «SA»

(Only with LME22...) The air damper opens until the nominal load position is reached. Only then will fan motor «M» be switched on.

t10 Specified time for air pressure signal

On completion of this period of time, the set air pressure must have built up, or else lockout will occur.

t1 Prepurge time

Purging the combustion chamber and the secondary heating surfaces: required with low-fire air volumes when using the LME21... and with nominal load air volumes when using the LME22.... The diagrams show the so-called prepurge time «t1» during which air pressure monitor «LP» must indicate that the required air pressure is available. The effective prepurge time «t1» comprises interval end «tw» through «t3».

t12 Programmed closing time for actuator «SA»

(Only with LME22...)During «t12», the air damper travels to the low-fire position.

t3 Preignition time

During «t3» and up to the end of «TSA», flame relay «FR» is forced to close. On completion of «t3», the release of fuel is triggered at terminal 4.

TSA Ignition safety time

On completion of «TSA», a flame signal must be present at terminal 1. That flame signal must be continuously available until shutdown occurs, or else flame relay «FR» will be deenergized, resulting in lockout.

t4 Interval BV1 and BV2-LR

Time between the end of TSA and the signal to the second fuel valve BV2 or to the load controller LR

B - B' Interval for flame establishment

C Burner operation position

C - D Burner operation (heat production)

D Controlled by "R" shutdown

The burner stops and the control device is ready for a new startup.

LME11 control sequence

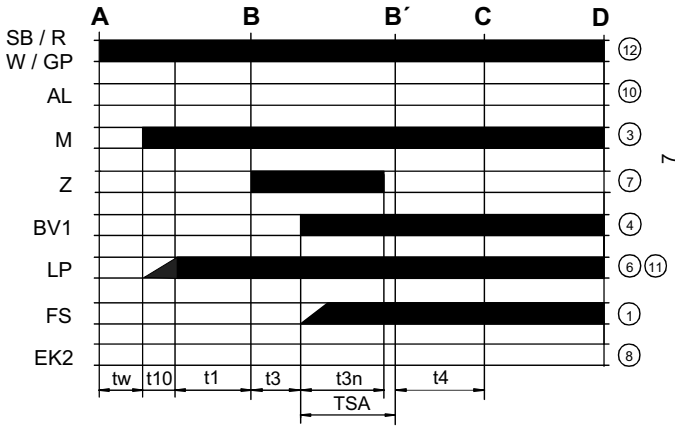

LME21 control sequence

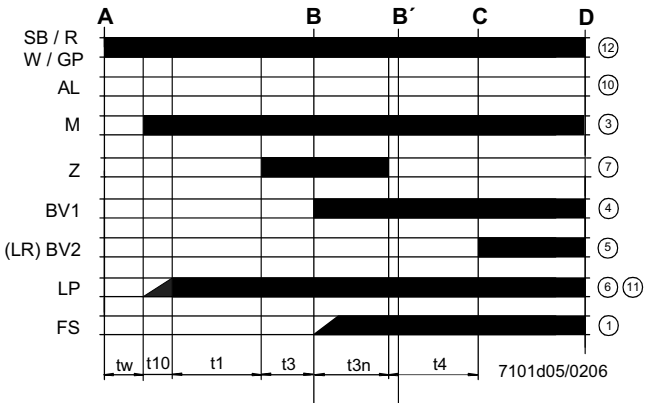

LME22 control sequence

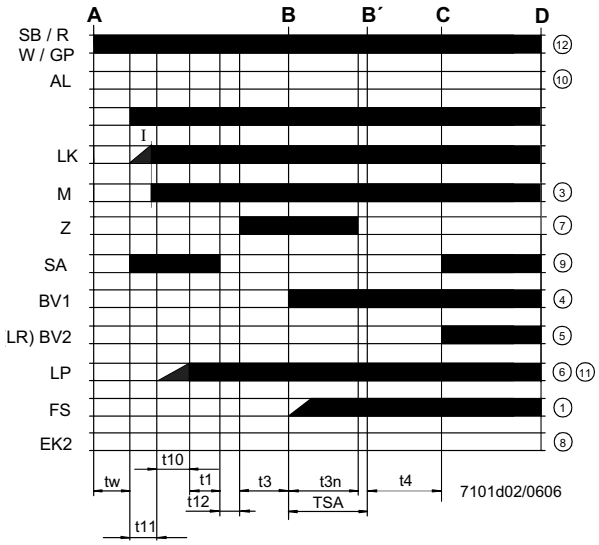

Control sequence

tw	Waiting time
t1	Purge time
TSA	Ignition safety time
t3	Preignition time
t3n	Postignition time
t4	Interval between BV1 and BV2/LR
t10	Specified time for air pressure signal
t11	Programmed opening time for actuator SA
t12	Programmed closing time for actuator SA

LME11 connection diagram

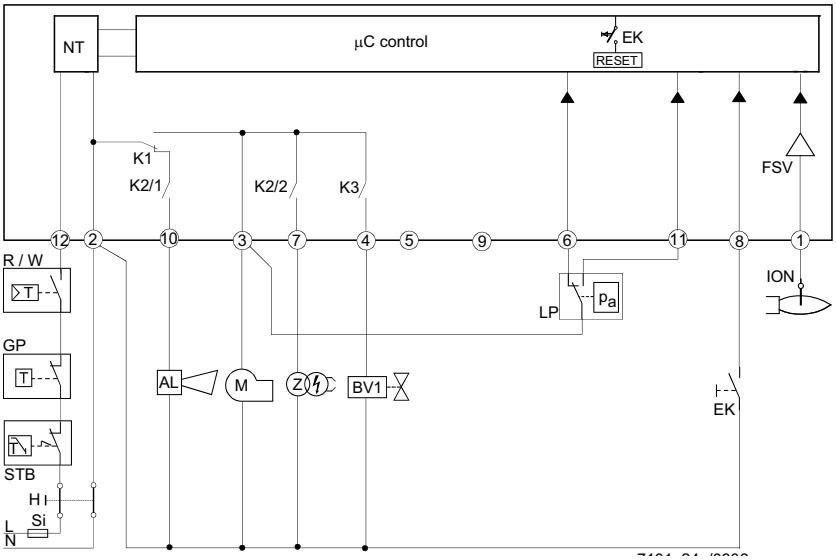

LME21 connection diagram

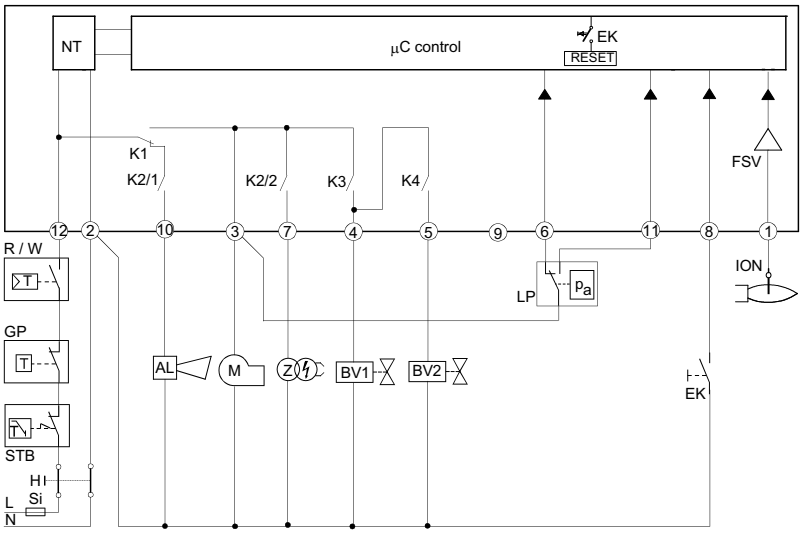

LME22 connection diagram

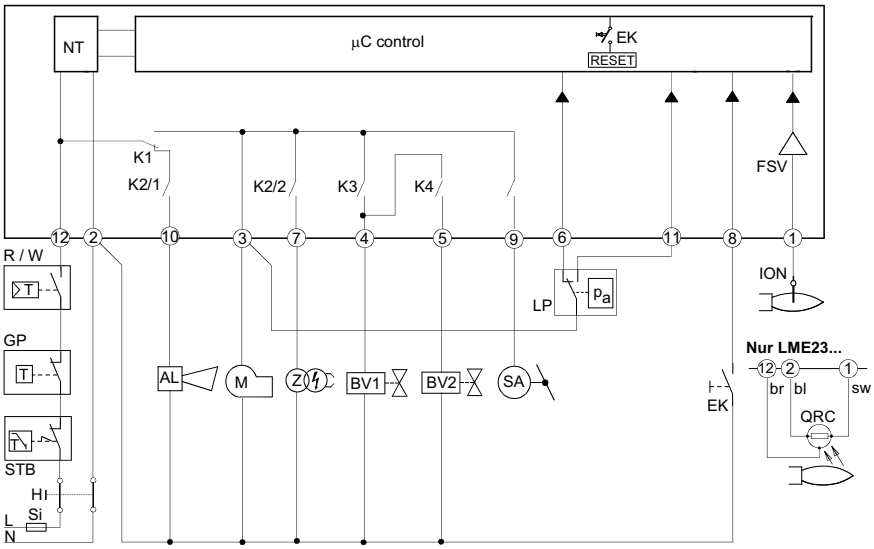

Connection diagram

AL	Error message (alarm)
BV	Fuel valve
EK2	Remote lockout reset button
FS	Flame signal
GP	Gas pressure switch
LP	Air pressure switch
LR	Load controller
M	Fan motor
R	Control thermostat/pressurestat
SB	Safety limit thermostat
W	Limit thermostat /pressure switch
Z	Ignition transformer

CONTROL PROGRAM IN THE EVENT OF FAULT

- If a fault occurs, all outputs will immediately be deactivated (in less than 1s).
- After an interruption of power, a restart will be made with the full program sequence.
- If the operating voltage drops below the undervoltage thresold, a safety shutdown is performed.
- If the operating voltage exceeds the undervoltage thresold, a restart will be performed.
- In case of extraneous light during “t1”, a lockout occurs.
- In case of extraneous light during “tw”, there is a prevention of startup and a lockout after 30 seconds.
- In case of no flame at the end of TSA, there will be max. 3 repetitions of the startup cycle, followed by a lockout at the end of TSA, for mod. LME11..; directly a lockout at the end of TSA for LME21-22 models.
- For LME11 model: if a loss of flame occurs during operation, in case of an establishment of flame at the end of TSA, there will be max. 3 repetitions, otherwise a lockout will occur.
- For LME21-22 models: if a loss of flame occurs during operation, there will be a lockout.
- If the contact of air pressure monitor LP is in working position, a prevention of startup and lockout after 65 seconds will occur.
- IIf the contact of air pressure monitor LP is in normal position, a lockout occurs at the end of t10.
- If no air pressure signal is present after completion of t1, a lockout will occur.

CONTROL BOX LOCKED

In the event of lockout, the LME.. remains locked and the red signal lamp (LED) will light up.The burner control can immediately be reset. This state is also mantained in the case fo mains failure.

DIAGNOSITICS OF THE CASUE OF FAULT

- Press the lockout reset button for more than 3 seconds to activate the visual diagnostics.
- Count the number of blinks of the red signsl lamp and check the fault condition on the “Error code table” (the device repeats the blinks for regular intervals).

During diagnostics, the control outputs are deactivated:

- the burner remains shut down;
- external fault indication is deactivated;
- fault status is showed by the red LED, inside the LME’s lockout reset buttonaccording to the “Error code table”:

ERROR CODE TABLE	
2 blinks **	**No establishment of flame at the end of TSA** - Faulty or soiled fuel valves - Faulty or soiled flame detector - Inadequate adjustement of burner, no fuel - Faulty ignition equipment
3 blinks ***	**The air pressure switch does not switch or remains in idle position:** - LP is faulty - Loss of air pressure signal after t10 - LPis welded in normal position.
4 blinks ****	- Extraneous light when burner starts up.
5 blinks *****	- LP is working position.
6 blinks *****	Free.
7 blinks *******	**Loss of flame during operation** - Faulty or soiled fuel valves - Faulty or soiled flame detector - Inadequate adjustement of burner
8 ÷ 9 blinks	Free
10 blinks **********	**Faulty output contacts** ***Attention: “lockout” remote signal (terminal no. 10) not enabled*** - Wiring error - Anomalous voltage on ouput terminals - Other faults
14 blinks ************ (only for LME4x)**	- CPI contact (gas valve microswitch) not closed.

RESETTING THE BURNER CONTROL

When lockout occurs, the burner control can immediately be reset, by pressing the lockout reset button for about 1..3 seconds. The LME.. can only be reset when all contacts in the line are closed and when there is no undervoltage.

LIMITATION OF REPETITIONS (only for LME11.. model)

If no flame is established at the end of TSA, or if the flame is lost during operation, a maximum of 3 repetitions per controller startup can be performed via “R”, otherwise lockout will be initiated. Counting of repetitions is restarted each time a controlled startup via “R” takes place.

⚠ **Condensation, formation of ice and ingress of water are not permitted!**

TECHNICAL CHARACTERISTICS

Mains voltage	120V AC +10% / -15% 230V AC +10% / -15%
Frequency	50 ... 60 Hz +/- 6%
Power consumption	12VA
External primary fuse	max. 10 A (slow)
input current at terminal 12	max. 5 A
Detection cable length	max. 3m (for electrode)
Detection cable length	max. 20 m (laid separately, for QRA probe)
Reset cable length	max. 20 m (posato separatamente)
Term. 8 & 10 cable length	max. 20 m
Thermostat cable length and other terminals	max. 3 m
Safety class	I
Index of protection	IP40 (to be ensured during mounting)
Operating conditions	-20... +60 °C, < 95% UR
Storage conditions	-20... +60 °C, < 95% UR
Weight	approx. 160 g

C.I.B. UNIGAS S.p.A.
Via L.Galvani, 9 - 35011 Campodarsego (PD) - ITALY
Tel. +39 049 9200944 - Fax +39 049 9200945/9201269
web site: www.cibunigas.it - e-mail: cibunigas@cibunigas.it

Note: specifications and data subject to change. Errors and omissions excepted.

VERSIONE MONOSTADIO "TN"
"TN" SINGLE-STAGE VERSION

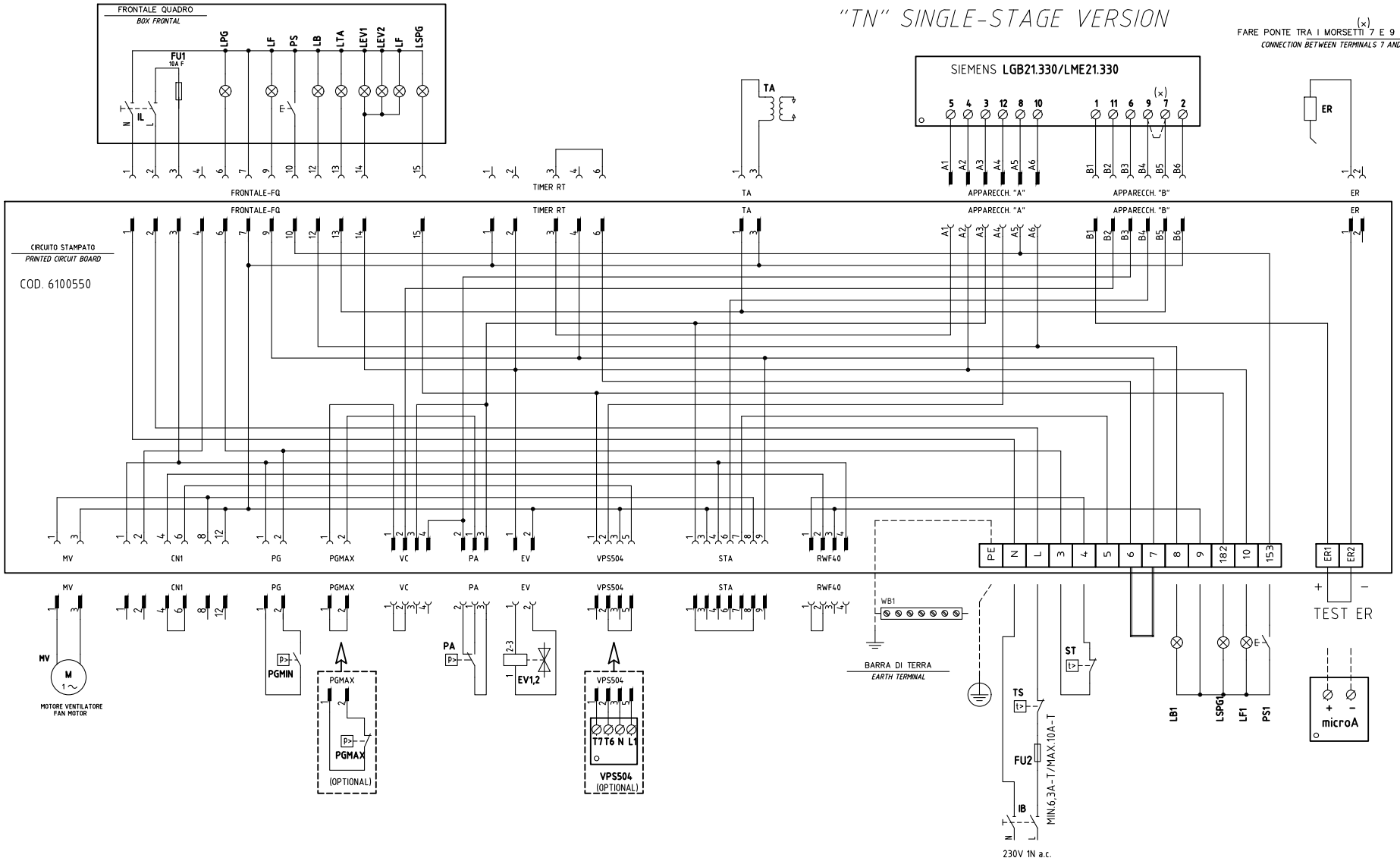

REV.	MODIFICA	DATA	FIRME
02	WIRING UPDATE	14/06/16	U. PINTON
01	"TN" VERSION ADDED	09/11/06	U. PINTON

UNIGAS

Impianto: TIPI/TYPES P20 / P30
MODELLO x–.TN(AB)(PR)(MD).x.xx.A.xx

Descrizione: CON CIRCUITO STAMPATO COD. 6100550
WITH PRINTED CIRCUIT COD. 6100550

Ordine:

Commessa:

Esecutore: U. PINTON

Data Controllato: 14/06/2016

Controllato: G. SCATTOLIN

Data: 25/10/2006

Revisione: 02

Dis. N. 18 – 0112

PREC.: /

FOGLIO: 1

SEGUE: 2

TOTALE: 5

VERSIONE ALTA-BASSA FIAMMA "AB" / PROGRESSIVO "PR"
"AB" HIGH-LOW / "PR" PROGRESSIVE VERSION

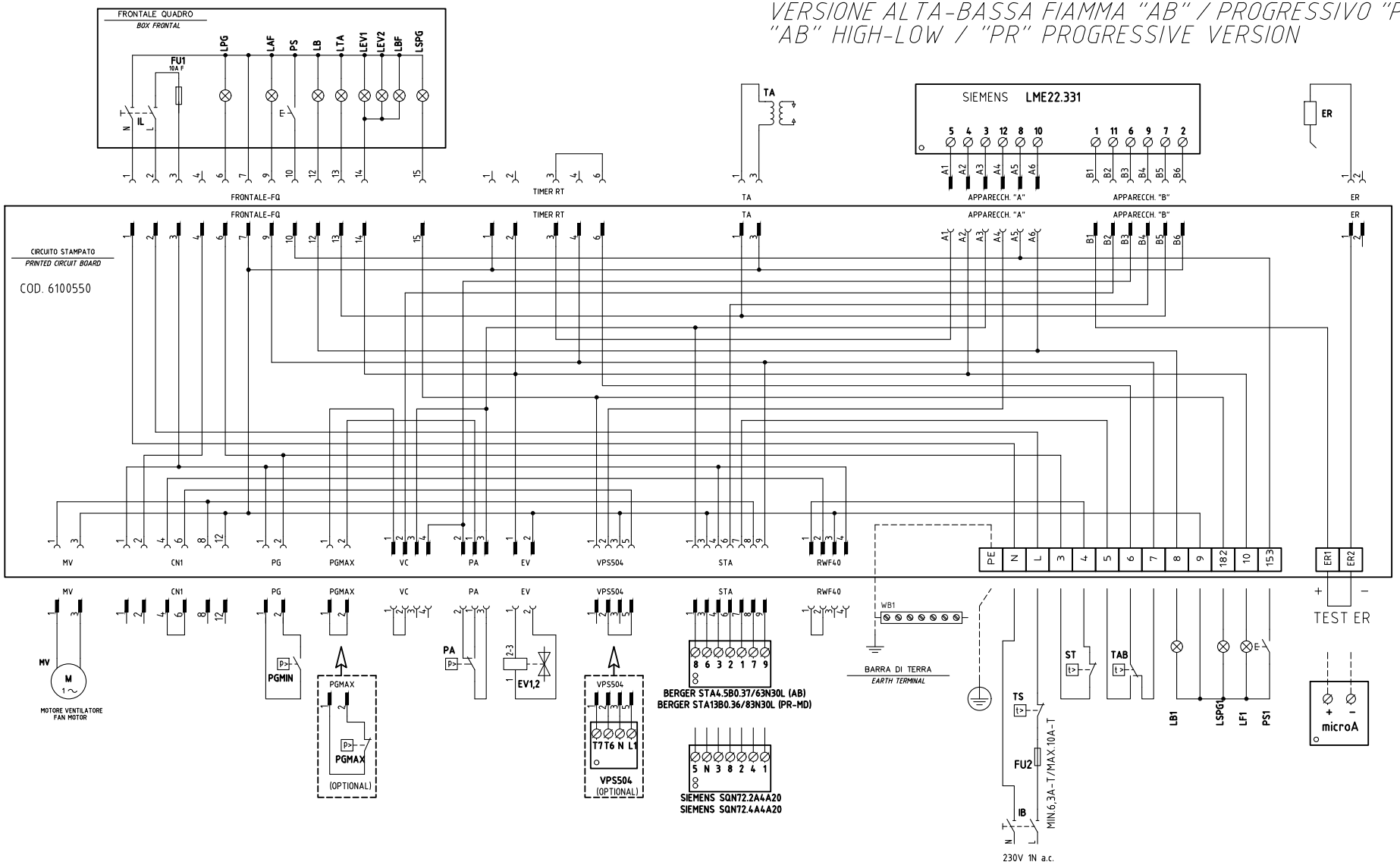

Data 25/10/2006		PREC. 1	FOGLIO 2
Revisione 02			
Dis. N. 18 – 0112		SEGUE 3	TOTALE 5

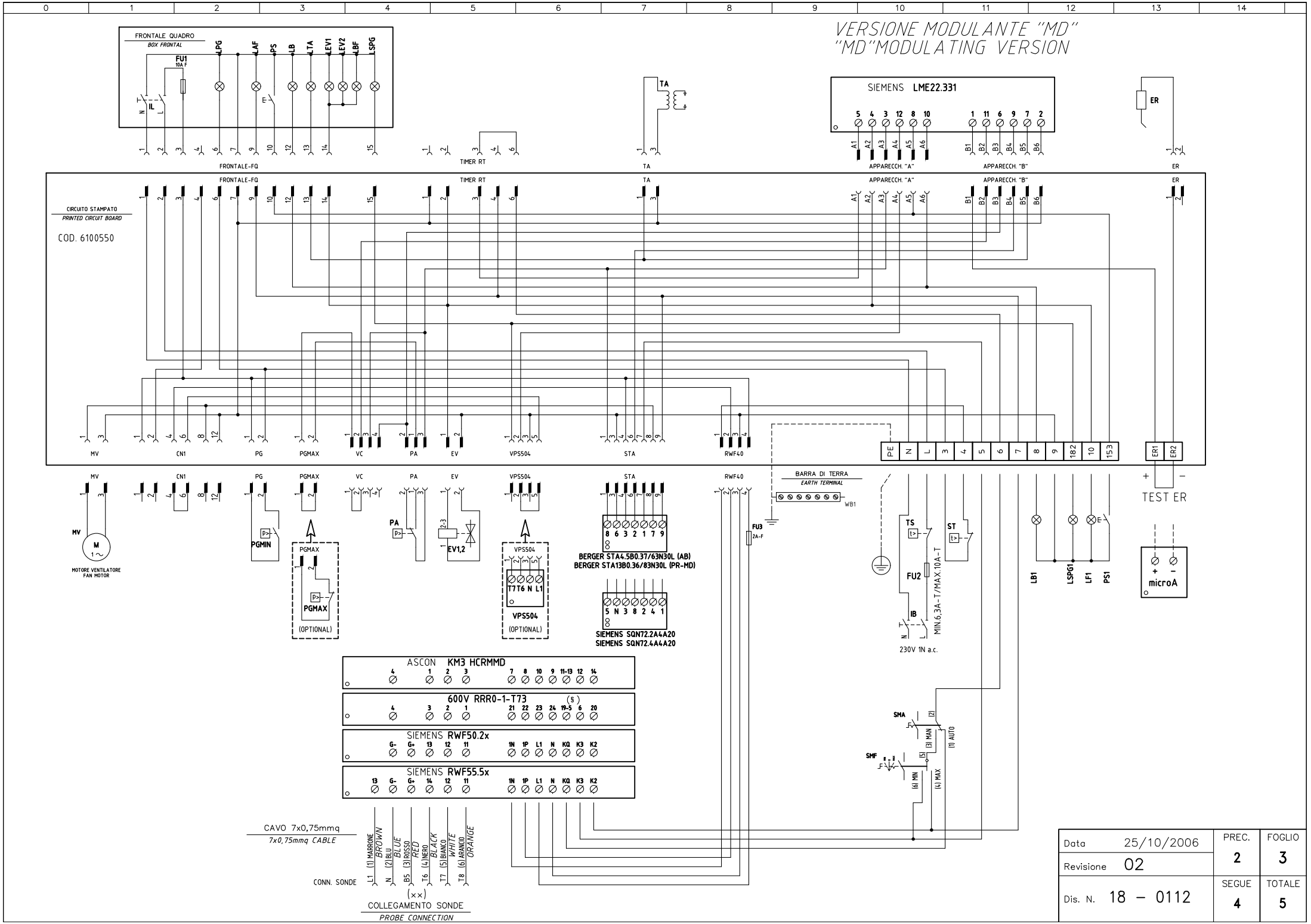
VERSIONE MODULANTE "MD"
"MD" MODULATING VERSION
FRONTALE QUADRO
BOX FRONTAL
FU1
10A F
LPG
LAF
PS
LB
LTA
LEV1
LEV2
LBF
LSPG
IL
TIMER RT
TA
SIEMENS LME22.331
APPARECCH. "A"
APPARECCH. "B"
ER
CIRCUITO STAMPATO
PRINTED CIRCUIT BOARD
COD. 6100550
FRONTALE-FQ
MV
CN1
PG
PGMAX
VC
PA
EV
VPS504
STA
RWF40
PE
N
L
3
4
5
6
7
8
9
182
10
153
ER1
ER2
TEST ER
BARRA DI TERRA
EARTH TERMINAL
WB1
MOTORE VENTILATORE
FAN MOTOR
PGMIN
PGMAX
(OPTIONAL)
EV1,2
VPS504
T7T6 N L1
(OPTIONAL)
BERGER STA4.5B0.37/63N30L (AB)
BERGER STA13B0.36/83N30L (PR-MD)
SIEMENS SQN72.2A4A20
SIEMENS SQN72.4A4A20
FU3
2A-F
TS
ST
FU2
IB
MIN 6,3A-T/MAX 10A-T
230V 1N a.c.
LB1
LSPG1
LF1
PS1
microA
ASCON KM3 HCRMMD
600V RRR0-1-T73
SIEMENS RWF50.2x
SIEMENS RWF55.5x
SMA
SMF
(1) AUTO
(3) MAN
(4) MAX
(6) MIN
CAVO 7x0,75mmq
7x0,75mmq CABLE
CONN. SONDE
L1 (1) MARRONE BROWN
N (2) BLU BLUE
B5 (3) ROSSO RED
T6 (4) NERO BLACK
T7 (5) BIANCO WHITE
T8 (6) ARANCIO ORANGE
(xx)
COLLEGAMENTO SONDE
PROBE CONNECTION
Data 25/10/2006
Revisione 02
Dis. N. 18 – 0112
PREC. 2
FOGLIO 3
SEGUE 4
TOTALE 5

(××)

ATTENZIONE COLLEGAMENTO SONDE CON CONNETTORE 7 POLI

WARNING PROBE CONNECTION WITH 7 PINS CONNECTOR

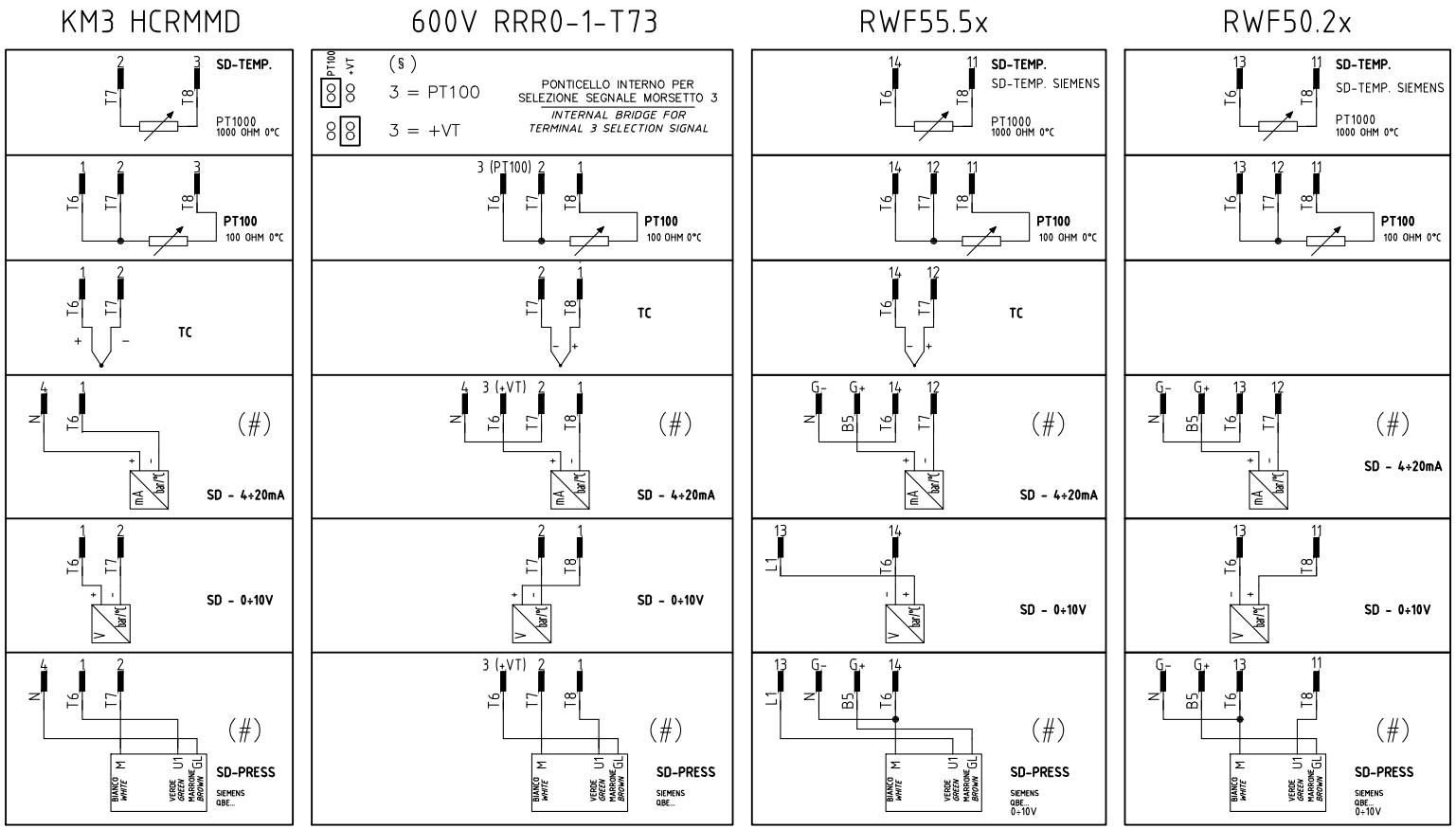

(#)

COLLEGAMENTO SOLO PER TRASDUTTORI PASSIVI

TRASDUCER PASSIVE CONNECTION ONLY

Data 25/10/2006		PREC. 3	FOGLIO 4
Revisione 02			
Dis. N. 18 – 0112		SEGUE 5	TOTALE 5

Sigla/Item	Funzione	Function
600V RRR0-1-T73	REGOLATORE MODULANTE (ALTERNATIVO)	BURNER MODULATOR (ALTERNATIVE)
BERGER STA4.5B0.37/63N30L (AB	SERVOCOMANDO SERRANDA ARIA	AIR DAMPER SERVO CONTROL
BERGER STA13B0.36/63N30L (PR-MD)	SERVOCOMANDO SERRANDA ARIA	AIR DAMPER SERVO CONTROL
ER	ELETTRODO RILEVAZIONE FIAMMA	FLAME DETECTION ELECTRODE
EV1,2	ELETTROVALVOLE GAS (O GRUPPO VALVOLE)	GAS ELECTRO-VALVES (OR VALVES GROUP)
FU1	FUSIBILE DI LINEA	LINE FUSE
FU2	FUSIBILE DI LINEA	LINE FUSE
FU3	FUSIBILE AUSILIARIO	AUXILIARY FUSE
IB	INTERRUTTORE LINEA BRUCIATORE	BURNER LINE SWITCH
IL	INTERRUTTORE LINEA AUSILIARI	AUXILIARY LINE SWITCH
KM3 HCRMMD	REGOLATORE MODULANTE (ALTERNATIVO)	BURNER MODULATOR (ALTERNATIVE)
LAF	LAMPADA SEGNALAZIONE ALTA FIAMMA BRUCIATORE	BURNER IN HIGH FLAME INDICATOR LIGHT
LB	LAMPADA SEGNALAZIONE BLOCCO BRUCIATORE	INDICATOR LIGHT FOR BURNER LOCK-OUT
LB1	LAMPADA SEGNALAZIONE BLOCCO BRUCIATORE	INDICATOR LIGHT FOR BURNER LOCK-OUT
LBF	LAMPADA SEGNALAZIONE BASSA FIAMMA BRUCIATORE	BURNER IN LOW FLAME INDICATOR LIGHT
LEV1	LAMPADA SEGNALAZIONE APERTURA [EV1]	INDICATOR LIGHT FOR OPENING OF ELECTRO-VALVE [EV1]
LEV2	LAMPADA SEGNALAZIONE APERTURA [EV2]	INDICATOR LIGHT FOR OPENING OF ELECTRO-VALVE [EV2]
LF	LAMPADA SEGNALAZIONE FUNZIONAMENTO BRUCIATORE	BURNER IN LOW FLAME INDICATOR LIGHT
LF1	LAMPADA SEGNALAZIONE FUNZIONAMENTO BRUCIATORE	INDICATOR LIGHT BURNER OPERATION
LGB21.330/LME21.330	APPARECCHIATURA CONTROLLO FIAMMA	FLAME MONITOR DEVICE
LME22.331	APPARECCHIATURA CONTROLLO FIAMMA	FLAME MONITOR DEVICE
LPG	LAMPADA SEGNALAZIONE PRESENZA GAS IN RETE	INDICATOR LIGHT FOR PRESENCE OF GAS IN THE NETWORK
LSPG	LAMPADA SEGNALAZIONE BLOCCO CONTROLLO TENUTA VALVOLE	INDICATOR LIGHT FOR LEAKAGE OF VALVES
LSPG1	LAMPADA SEGNALAZIONE BLOCCO CONTROLLO TENUTA VALVOLE	INDICATOR LIGHT FOR LEAKAGE OF VALVES
LTA	LAMPADA SEGNALAZIONE TRASFORMATORE DI ACCENSIONE	IGNITION TRANSFORMER INDICATOR LIGHT

Sigla/Item	Funzione	Function
MV	MOTORE VENTILATORE	FAN MOTOR
PA	PRESSOSTATO ARIA COMBURENTE	COMBUSTION AIR PRESSURE SWITCH
PGMAX	PRESSOSTATO GAS DI MASSIMA PRESSIONE	MAXIMUM PRESSURE GAS SWITCH
PGMIN	PRESSOSTATO GAS DI MINIMA PRESSIONE	MINIMUM GAS PRESSURE SWITCH
PS	PULSANTE SBLOCCO FIAMMA	LOCK-OUT RESET BUTTON
PS1	PULSANTE SBLOCCO FIAMMA	LOCK-OUT RESET BUTTON
PT100	SONDA DI TEMPERATURA	TEMPERATURE PROBE
RWF50.2x	REGOLATORE MODULANTE (ALTERNATIVO)	BURNER MODULATOR (ALTERNATIVE)
RWF55.5x	REGOLATORE MODULANTE (ALTERNATIVO)	BURNER MODULATOR (ALTERNATIVE)
SD-PRESS	SONDA DI PRESSIONE	PRESSURE PROBE
SD-TEMP.	SONDA DI TEMPERATURA	TEMPERATURE PROBE
SD - 0÷10V	TRASDUTTORE USCITA IN TENSIONE	TRANSDUCER VOLTAGE OUTPUT
SD - 4÷20mA	TRASDUTTORE USCITA IN CORRENTE	TRANSDUCER CURRENT OUTPUT
SIEMENS SQN72.2A4A20	SERVOCOMANDO SERRANDA ARIA (ALTERNATIVO)	AIR DAMPER ACTUATOR (ALTERNATIVE)
SIEMENS SQN72.4A4A20	SERVOCOMANDO SERRANDA ARIA (ALTERNATIVO)	AIR DAMPER ACTUATOR (ALTERNATIVE)
SMA	SELETTORE MANUALE/AUTOMATICO	MANUAL/AUTOMATIC SWITCH
SMF	SELETTORE MANUALE FUNZIONAMENTO MIN-0-MAX	MIN-0-MAX MANUAL OPERATION SWITCH
ST	SERIE TERMOSTATI/PRESSOSTATI	SERIES OF THERMOSTATS OR PRESSURE SWITCHES
TA	TRASFORMATORE DI ACCENSIONE	IGNITION TRANSFORMER
TAB	TERMOSTATO/PRESSOSTATO ALTA-BASSA FIAMMA	HIGH-LOW THERMOSTAT/PRESSURE SWITCHES
TC	TERMOCOPPIA	THERMOCOUPLE
TS	TERMOSTATO/PRESSOSTATO DI SICUREZZA	SAFETY THERMOSTAT OR PRESSURE SWITCH
VPS504	CONTROLLO DI TENUTA VALVOLE GAS (OPTIONAL)	GAS LEAKAGE MONITOR DEVICE (OPTIONAL)
WB1	BARRA DI TERRA	EARTH TERMINAL
microA	MICROAMPEROMETRO	MICROAMMETER

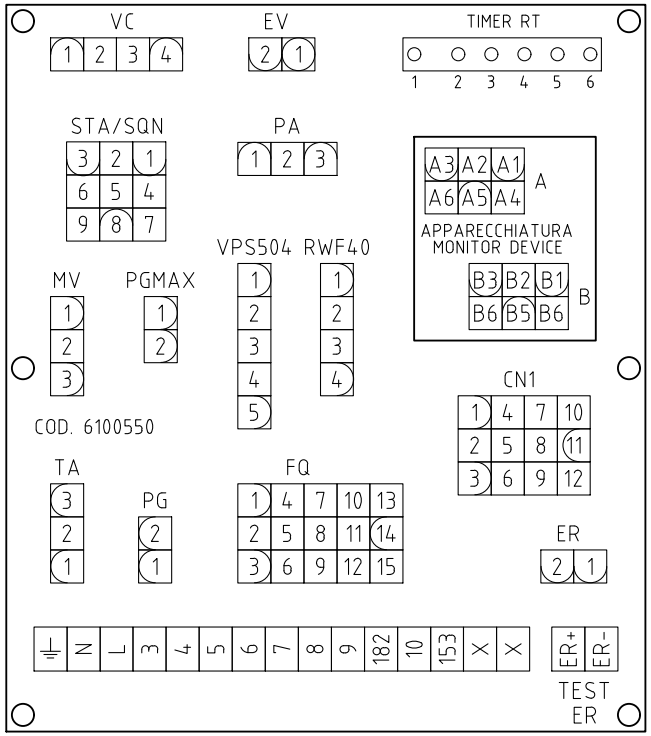

SERVOCOMANDO SERRANDA ARIA
AIR DAMPER ACTUATOR
BERGER STA6(12)B3.41/63N32L

ST2	ALTA FIAMMA *HIGH FLAME*
ST0	SOSTA *STAND-BY*
ST1	BASSA FIAMMA *LOW FLAME*
MV	NON USATA *NOT USED*

SERVOCOMANDO SERRANDA ARIA (ALTERNATIVO)
AIR DAMPER ACTUATOR (ALTERNATIVE)
SIEMENS SQN30.1(2)51A

I	ALTA FIAMMA *HIGH FLAME*
II	SOSTA *STAND-BY*
III	BASSA FIAMMA *LOW FLAME*
V	NON USATA *NOT USED*

SERVOCOMANDO SERRANDA ARIA (ALTERNATIVO)
AIR DAMPER ACTUATOR (ALTERNATIVE)
SIEMENS SQN72.xA4A20

I (ROSSO) *I (RED)*	ALTA FIAMMA *HIGH FLAME*
II (BLU) *II (BLUE)*	SOSTA *STAND-BY*
III (ARANCIO) *III (ORANGE)*	BASSA FIAMMA *LOW FLAME*
IV (NERO) *IV (BLACK)*	NON USATA *NOT USED*

Data	25/10/2006	PREC.	FOGLIO
Revisione	02	4	5
Dis. N.	18 – 0112	SEGUE	TOTALE
		/	5