LO280 - LO400

IDEA Series
Light oil Burners

MANUAL OF INSTALLATION - USE - MAINTENANCE

CIB UNIGAS

BURNERS - BRUCIATORI - BRULERS - BRENNER - QUEMADORES - ГОРЕЛКИ

M039134CD Rel. 3.8 03/2024

DANGERS, WARNINGS AND NOTES OF CAUTION

THIS MANUAL IS SUPPLIED AS AN INTEGRAL AND ESSENTIAL PART OF THE PRODUCT AND MUST BE DELIVERED TO THE USER.

INFORMATION INCLUDED IN THIS SECTION ARE DEDICATED BOTH TO THE USER AND TO PERSONNEL FOLLOWING PRODUCT INSTALLATION AND MAINTENANCE.

THE USER WILL FIND FURTHER INFORMATION ABOUT OPERATING AND USE RESTRICTIONS, IN THE SECOND SECTION OF THIS MANUAL. WE HIGHLY RECOMMEND TO READ IT.

CAREFULLY KEEP THIS MANUAL FOR FUTURE REFERENCE.

1) GENERAL INTRODUCTION

- The equipment must be installed in compliance with the regulations in force, following the manufacturer's instructions, by qualified personnel.
- Qualified personnel means those having technical knowledge in the field of components for civil or industrial heating systems, sanitary hot water generation and particularly service centres authorised by the manufacturer.
- Improper installation may cause injury to people and animals, or damage to property, for which the manufacturer cannot be held liable.
- Remove all packaging material and inspect the equipment for integrity.

In case of any doubt, do not use the unit - contact the supplier.

The packaging materials (wooden crate, nails, fastening devices, plastic bags, foamed polystyrene, etc), should not be left within the reach of children, as they may prove harmful.

- Before any cleaning or servicing operation, disconnect the unit from the mains by turning the master switch OFF, and/or through the cut-out devices that are provided.
- Make sure that inlet or exhaust grilles are unobstructed.
- In case of breakdown and/or defective unit operation, disconnect the unit. Make no attempt to repair the unit or take any direct action.

Contact qualified personnel only.

Units shall be repaired exclusively by a servicing centre, duly authorised by the manufacturer, with original spare parts and accessories.

Failure to comply with the above instructions is likely to impair the unit's safety.

To ensure equipment efficiency and proper operation, it is essential that maintenance operations are performed by qualified personnel at regular intervals, following the manufacturer's instructions.

- When a decision is made to discontinue the use of the equipment, those parts likely to constitute sources of danger shall be made harmless.
- In case the equipment is to be sold or transferred to another user, or in case the original user should move and leave the unit behind, make sure that these instructions accompany the equipment at all times so that they can be consulted by the new owner and/or the installer.
- This unit shall be employed exclusively for the use for which it is meant. Any other use shall be considered as improper and, therefore, dangerous.

The manufacturer shall not be held liable, by agreement or otherwise, for damages resulting from improper installation, use and failure to comply with the instructions supplied by the manufacturer.The occurrence of any of the following circustances may cause explosions, polluting unburnt gases (example: carbon monoxide CO), burns, serious harm to people, animals and things:

- Failure to comply with one of the WARNINGS in this chapter
- Incorrect handling, installation, adjustment or maintenance of the burner
- Incorrect use of the burner or incorrect use of its parts or optional supply

2) SPECIAL INSTRUCTIONS FOR BURNERS

- The burner should be installed in a suitable room, with ventilation openings complying with the requirements of the regulations in force, and sufficient for good combustion.
- Only burners designed according to the regulations in force should be used.
- This burner should be employed exclusively for the use for which it was designed.
- Before connecting the burner, make sure that the unit rating is the same as delivery mains (electricity, gas oil, or other fuel).
- Observe caution with hot burner components. These are, usually, near to the flame and the fuel pre-heating system, they become hot during the unit operation and will remain hot for some time after the burner has stopped.

When the decision is made to discontinue the use of the burner, the user shall have qualified personnel carry out the following operations:

a Remove the power supply by disconnecting the power cord from the mains.

b Disconnect the fuel supply by means of the hand-operated shut-off valve and remove the control handwheels from their spindles.

Special warnings

- Make sure that the burner has, on installation, been firmly secured to the appliance, so that the flame is generated inside the appliance fire-box.
- Before the burner is started and, thereafter, at least once a year, have qualified personnel perform the following operations:

a set the burner fuel flow rate depending on the heat input of the appliance;

b set the flow rate of the combustion-supporting air to obtain a combustion efficiency level at least equal to the lower level required by the regulations in force;

c check the unit operation for proper combustion, to avoid any harmful or polluting unburnt gases in excess of the limits permitted by the regulations in force;

d make sure that control and safety devices are operating properly;

e make sure that exhaust ducts intended to discharge the products of combustion are operating properly;

f on completion of setting and adjustment operations, make sure that all mechanical locking devices of controls have been duly tightened;

g make sure that a copy of the burner use and maintenance instructions is available in the boiler room.

- In case of a burner shut-down, reser the control box by means of the RESET pushbutton. If a second shut-down takes place, call the Technical Service, **without trying to RESET further**.
- The unit shall be operated and serviced by qualified personnel only, in compliance with the regulations in force.

3) GENERAL INSTRUCTIONS DEPENDING ON FUEL USED

3a) ELECTRICAL CONNECTION

- For safety reasons the unit must be efficiently earthed and installed as required by current safety regulations.
- It is vital that all saftey requirements are met. In case of any doubt, ask for an accurate inspection of electrics by qualified personnel, since the manufacturer cannot be held liable for damages that may be caused by failure to correctly earth the equipment.
- Qualified personnel must inspect the system to make sure that it is adequate to take the maximum power used by the equipment shown on the equipment rating plate. In particular, make sure that the system cable cross section is adequate for the power absorbed by the unit.
- No adaptors, multiple outlet sockets and/or extension cables are permitted to connect the unit to the electric mains.
- An omnipolar switch shall be provided for connection to mains, as required by the current safety regulations.
- The use of any power-operated component implies observance of a few basic rules, for example:
  -do not touch the unit with wet or damp parts of the body and/or with bare feet;
  - do not pull electric cables;
  - do not leave the equipment exposed to weather (rain, sun, etc.) unless expressly required to do so;
  - do not allow children or inexperienced persons to use equipment;
- The unit input cable shall not be replaced by the user.
  In case of damage to the cable, switch off the unit and contact qualified personnel to replace.
  When the unit is out of use for some time the electric switch supplying all the power-driven components in the system (i.e. pumps, burner, etc.) should be switched off.

3b) FIRING WITH GAS, LIGHT OIL OR OTHER FUELS

GENERAL

- The burner shall be installed by qualified personnel and in compliance with regulations and provisions in force; wrong installation can cause injuries to people and animals, or damage to property, for which the manufacturer cannot be held liable.
- Before installation, it is recommended that all the fuel supply system pipes be carefully cleaned inside, to remove foreign matter that might impair the burner operation.
- Before the burner is commissioned, qualified personnel should inspect the following:

a the fuel supply system, for proper sealing;
b the fuel flow rate, to make sure that it has been set based on the firing rate required of the burner;
c the burner firing system, to make sure that it is supplied for the designed fuel type;
d the fuel supply pressure, to make sure that it is included in the range shown on the rating plate;
e the fuel supply system, to make sure that the system dimensions are adequate to the burner firing rate, and that the system is equipped with all the safety and control devices required by the regulations in force.

- When the burner is to remain idle for some time, the fuel supply tap or taps should be closed.

SPECIAL INSTRUCTIONS FOR USING GAS

Have qualified personnel inspect the installation to ensure that:

a the gas delivery line and train are in compliance with the regulations and provisions in force;
b all gas connections are tight;
c the boiler room ventilation openings are such that they ensure the air supply flow required by the current regulations, and in any case are sufficient for proper combustion.

- Do not use gas pipes to earth electrical equipment.
- Never leave the burner connected when not in use. Always shut the gas valve off.
- In case of prolonged absence of the user, the main gas delivery valve to the burner should be shut off.

Precautions if you can smell gas

a do not operate electric switches, the telephone, or any other item likely to generate sparks;
b immediately open doors and windows to create an air flow to purge the room;
c close the gas valves;
d contact qualified personnel.

- Do not obstruct the ventilation openings of the room where gas appliances are installed, to avoid dangerous conditions such as the development of toxic or explosive mixtures.

DIRECTIVES AND STANDARDS

Gas burners

European directives

-Regulation 2016/426/UE (appliances burning gaseous fuels)
-2014/35/UE (Low Tension Directive)
-2014/30/UE (Electromagnetic compatibility Directive)
-2006/42/EC (Machinery Directive)

Harmonized standards

-UNI EN 676 (Automatic forced draught burners for gaseous fuels)
-EN 55014-1 (Electromagnetic compatibility- Requirements for house hold appliances, electric tools and similar apparatus)
-EN 60204-1:2006 (Safety of machinery – Electrical equipment of machines.)
-CEI EN 60335-1 (Specification for safety of household and similar electrical appliances);
-CEI EN 60335-2-102 (Household and similar electrical appliances. Safety. Particular requirements for gas, oil and solid-fuel burning appliances having electrical connections).
-UNI EN ISO 12100:2010 (Safety of machinery - General principles for design - Risk assessment and risk reduction);

Light oil burners

European directives

-2014/35/UE (Low Tension Directive)
-2014/30/UE (Electromagnetic compatibility Directive)
-2006/42/EC (Machinery Directive)

Harmonized standards

-UNI EN 267-2011(Automatic forced draught burners for liquid fuels)
-EN 55014-1 (Electromagnetic compatibility- Requirements for house hold appliances, electric tools and similar apparatus)
-EN 60204-1:2006 (Safety of machinery – Electrical equipment of machines.)
-CEI EN 60335-1 (Specification for safety of household and similar electrical appliances);
-CEI EN 60335-2-102 (Household and similar electrical appliances. Safety. Particular requirements for gas, oil and solid-fuel burning appliances having electrical connections).
-UNI EN ISO 12100:2010 (Safety of machinery - General principles for design - Risk assessment and risk reduction);

Heavy oil burners

European Directives

-2014/35/UE (Low Tension Directive)
-2014/30/UE (Electromagnetic compatibility Directive)
-2006/42/EC (Machinery Directive)

Harmonized standards

-UNI EN 267(Automatic forced draught burners for liquid fuels)
-EN 55014-1 (Electromagnetic compatibility- Requirements for house hold appliances, electric tools and similar apparatus)
-EN 60204-1:2006 (Safety of machinery – Electrical equipment of machines.)
-CEI EN 60335-1 (Specification for safety of household and similar electrical appliances);
-CEI EN 60335-2-102 (Household and similar electrical appliances. Safety. Particular requirements for gas, oil and solid-fuel burning appliances having electrical connections).
-UNI EN ISO 12100:2010 (Safety of machinery - General principles for design - Risk assessment and risk reduction);

Gas - Light oil burners

European Directives

-Regulation 2016/426/UE (appliances burning gaseous fuels)
-2014/35/UE (Low Tension Directive)
-2014/30/UE (Electromagnetic compatibility Directive)
-2006/42/EC (Machinery Directive)

Harmonized standards

-UNI EN 676 (Automatic forced draught burners for gaseous fuels)
-UNI EN 267(Automatic forced draught burners for liquid fuels)
-EN 55014-1 (Electromagnetic compatibility- Requirements for house hold appliances, electric tools and similar apparatus)
-EN 60204-1:2006 (Safety of machinery – Electrical equipment of machines.)
-CEI EN 60335-1 (Specification for safety of household and similar electrical appliances);
-CEI EN 60335-2-102 (Household and similar electrical appliances. Safety. Particular requirements for gas, oil and solid-fuel burning appliances having electrical connections).
-UNI EN ISO 12100:2010 (Safety of machinery - General principles for design - Risk assessment and risk reduction);

Gas - Heavy oil burners

European directives:

-Regulation 2016/426/UE (appliances burning gaseous fuels)
-2014/35/UE (Low Tension Directive)
-2014/30/UE (Electromagnetic compatibility Directive)
-2006/42/EC (Machinery Directive)

Harmonized standards

-UNI EN 676 (Automatic forced draught burners for gaseous fuels)
-EN 55014-1 (Electromagnetic compatibility- Requirements for house hold appliances, electric tools and similar apparatus)
-EN 60204-1:2006 (Safety of machinery – Electrical equipment of machines.)
-CEI EN 60335-1 (Specification for safety of household and similar electrical appliances);
-CEI EN 60335-2-102 (Household and similar electrical appliances. Safety. Particular requirements for gas, oil and solid-fuel burning appliances having electrical connections).
-UNI EN ISO 12100:2010 (Safety of machinery - General principles for design - Risk assessment and risk reduction);

Industrial burners

European directives

-Regulation 2016/426/UE (appliances burning gaseous fuels)
-2014/35/UE (Low Tension Directive)
-2014/30/UE (Electromagnetic compatibility Directive)
-2006/42/EC (Machinery Directive)

Harmonized standards

-EN 55014-1 (Electromagnetic compatibility- Requirements for house hold appliances, electric tools and similar apparatus)
-EN 746-2 (Industrial thermoprocessing equipment - Part 2: Safety requirements for combustion and fuel handling systems)
-UNI EN ISO 12100:2010 (Safety of machinery - General principles for design - Risk assessment and risk reduction);
-EN 60204-1:2006 (Safety of machinery – Electrical equipment of machines.)
-EN 60335-2 (Electrical equipment of non-electric appliances for household and similar purposes. Safety requirements)

Burner data plate

For the following information, please refer to the data plate:

- burner type and burner model: must be reported in any communication with the supplier
- burner ID (serial number): must be reported in any communication with the supplier
- date of production (year and month)
- information about fuel type and network pressure

Type	--
Model	--
Year	--
S.Number	--
Output	--
Oil Flow	--
Fuel	--
Category	--
Gas Pressure	--
Viscosity	--
El.Supply	--
El.Consump.	--
Fan Motor	--
Protection	--
Drwaing n°	--
P.I.N.	--

SYMBOLS USED

WARNING! Failure to observe the warning may result in irreparable damage to the unit or damage to the environment

DANGER! Failure to observe the warning may result in serious injuries or death.

WARNING! Failure to observe the warning may result in electric shock with lethal consequences

Figures, illustrations and images used in this manual may differ in appearance from the actual product.

BURNER SAFETY

The burners - and the configurations described below - comply with the regulations in force regarding health, safety and the environment. For more in-depth information, refer to the declarations of conformity that are an integral part of this Manual.

DANGER! Incorrect motor rotation can seriously damage property and injure people.

Residual risks deriving from misuse and prohibitions

The burner has been built in order to make its operation safe; there are, however, residual risks.

Do not touch any mechanical moving parts with your hands or any other part of your body. Injury hazard
Do not touch any parts containing fuel (i.e. tank and pipes). Scalding hazard
Do not use the burner in situations other than the ones provided for in the data plate.
Do not use fuels other than the ones stated.
Do not use the burner in potentially explosive environments.
Do not remove or by-pass any machine safety devices.
Do not remove any protection devices or open the burner or any other component while the burner is running.
Do not disconnect any part of the burner or its components while the burner is running.
Untrained staff must not modify any linkages.

After any maintenance, it is important to restore the protection devices before restarting the machine.
All safety devices must be kept in perfect working order.
Personnel authorized to maintain the machine must always be provided with suitable protections.

ATTENTION: while running, the parts of the burner near the generator (coupling flange) are subject to overheating. Where necessary, avoid any contact risks by wearing suitable PPE.

PART I: INSTALLATION

Burner model identification

Burners are identified by burner type and model. Burner model identification is described as follow.

Type **LO400** Model	**G-.**	**AB.**	**S.**	***.**	**A.**
	(1)	(2)	(3)	(4)	(5)	(6)
(1) BURNER TYPE	**LO280, LO400**				
(2) FUEL	**G -** Light oil		**A -** Biodiesel		
(3) OPERATION(Available versions)	**TN -** Single-stage		**AB -** Double-stage		
(4) BLAST TUBE	**S -** Standard		**L -** Extended		
(5) DESTINATION COUNTRY	* - see data plate				
(6) BURNER VERSION	**A -** Standard **M -** With hydraulic ram				

Technical Specifications

BURNERS		**LO280 G-.TN....**	**LO280 G-.AB....**
Output	min. - max. kW	115 - 310	70 - 310
Fuel		Light oil	Light oil
Light oil rate	min.- max. kg/h	9.6 - 26	5.8 - 26
Viscosity	cSt @ 40°C	2 - 7.4	
Density	kg / m^3	0.84	
Power supply		220 / 230V - 50 / 60 Hz	
Electric motor	kW	0.25 (50 Hz) - 0.3 (60 Hz)	
Total power consumption	kW	0.55 (50 Hz) - 0.6 (60 Hz)	
Weight	kg	42	42
Operation		Single stage	Double stage
Operating temperature	°C	-10 ÷ +50	
Storage Temperature	°C	-20 ÷ +60	
Working service*		Intermittent	

BURNERS		**LO400 G-.TN....**	**LO400 G-.AB....**
Output	min. - max. kW	195 - 420	115 - 400
Fuel		Light oil	Light oil
Light oil rate	min.- max. kg/h	16 - 35	9.7 - 34
Viscosity	cSt @ 40°C	2 - 7.4	
Density	kg / m^3	0.84	
Power supply		220 / 230V - 50 / 60 Hz	
Electric motor	kW	0.37 (50 Hz) - 0.45 (60 Hz)	
Total power consumption	kW	0.67 (50 Hz) - 0.75 (60 Hz)	
Weight	kg	42	
Operation		Single stage	Double stage
Operating temperature	°C	-10 ÷ +50	
Storage Temperature	°C	-20 ÷ +60	
Working service*		Intermittent	

NOTE: Choosing the nozzle for light oil, consider Hi equal to 42.74MJ/kg.

Biodiesel: Viscosity = 1.9 - 6 cSt @ 40 °C Net calorific value: Hi = 8950 kcal/kg

*NOTE ON THE BURNER WORKING SERVICE:

- Burners provided with Siemens LOA24 control box: for safety reasons, one controlled shutdown must take place every 24 hours.
- Burners provided with Siemens LMO24-44 control box: the control box automatically stops after 24h of continuous working. The control box immediately starts up, automatically.

WARNING: if fuel used is BIODIESEL, some components must be replaced. Please contact our Technical Department for further details.

Overall dimensions (mm)

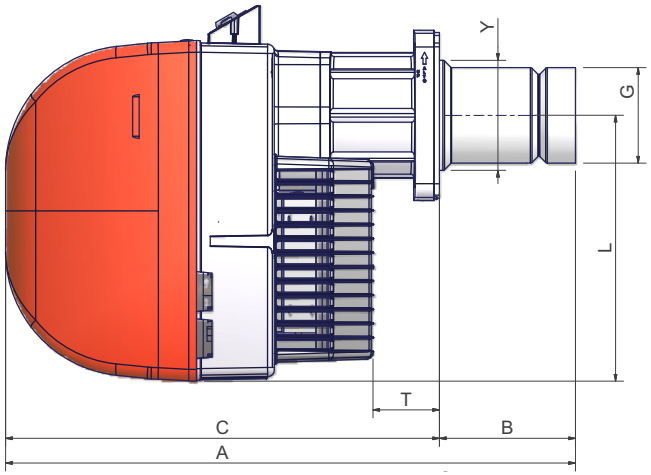

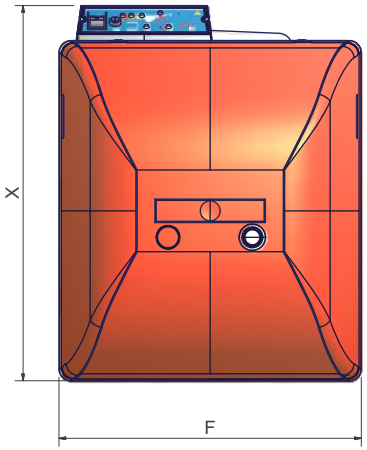

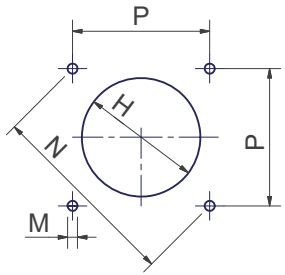

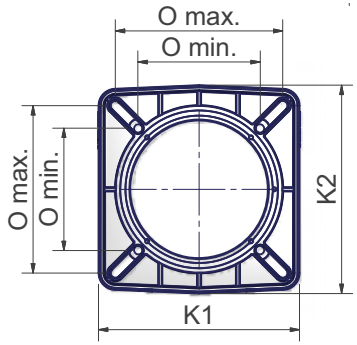

Boiler recommended drilling template and burner flange

	A(S*)	A(L*)	B(S*)	B(L*)	C	F	G	H	K1	K2	L	M	N	Omin	Omax	P	T	X	Y
LO280	733	878	163	308	570	396	108	128	215	223	348	M10	219	131	172	155	128	491	108
LO400	748	878	178	308	570	396	125	164	215	223	348	M10	219	131	172	155	89	491	144

*S = measure referred to burners fitted with standard blast tube

*L = measure referred to burners fitted with extended blast tube

As far as modifying the blast tube length for mod. (LO400) see paragraph “How to modify the the blast tube length”.

Performance curves

LO280 Single stage

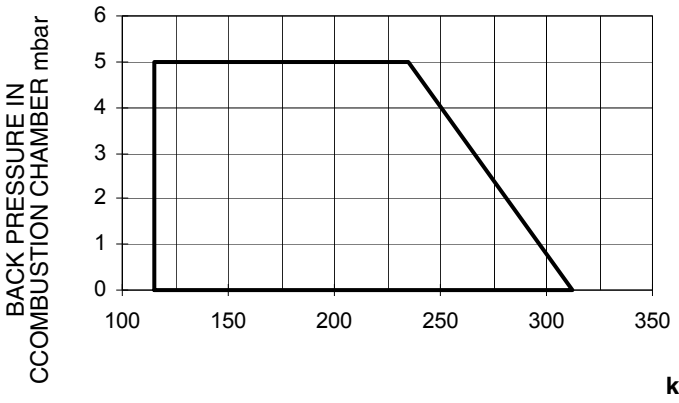

LO280 High-Low flame

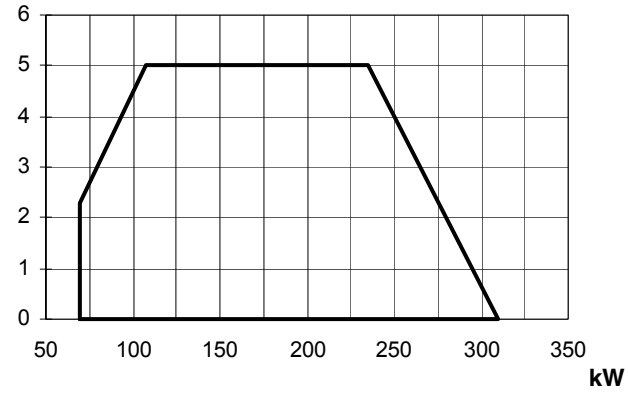

LO400 Single stage

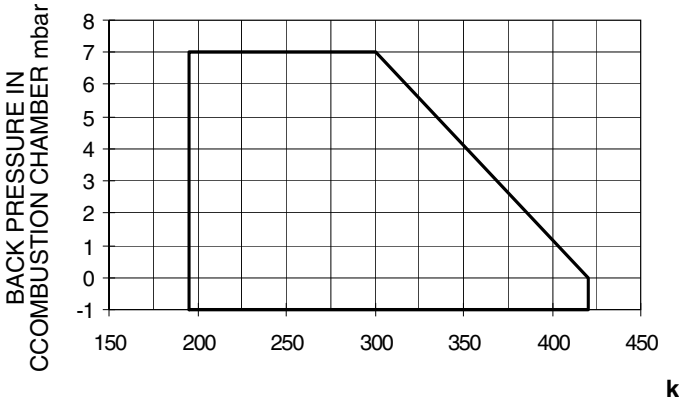

LO400 High-Low flame

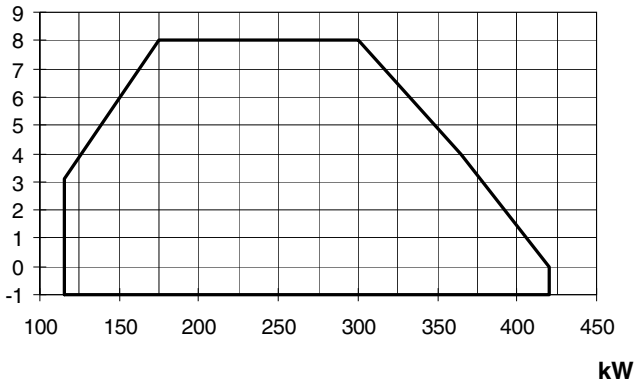

To get the input in kcal/h, multiply value in kW by 860.

Data are referred to standard conditions: atmospheric pressure at 1013mbar, ambient temperature at 15°C

NOTE: The performance curve is a diagram that represents the burner performance in the type approval phase or in the laboratory tests, but does not represent the regulation range of the machine. On this diagram the maximum output point is usually reached by adjsuting the combustion head to its “MAX” position (see paragraph “Adjusting the combustion head”); the minimum output point is reached setting the combustion head to its “MIN” position. During the first ignition, the combustion head is set in order to find a compromise between the burner output and the generator specifications, that is why the minimum output may be different from the Performance curve minimum.

How to modify blast tube length (mod. LO400)

To modify blast tube length please read the following instructions.

1 Remove combustion head (See “Removing the combustion head” - Part III of this user’s manual).

2 Remove the flanged piece T by removing the 4 socket head screws VTF (Fig. 4).

3 Remove the 4 screws which hold the blast tube to the flanged piece (Fig. 5).

4 Extract the blast tube from the flanged piece and assemble it in the other way round as shown in pictures Fig. 6 and Fig. 7. Now fasten the two pieces using the same screws (Fig. 8).

5 Assemble the whole piece to the burner, paying attention to the indication in picture Fig. 9.

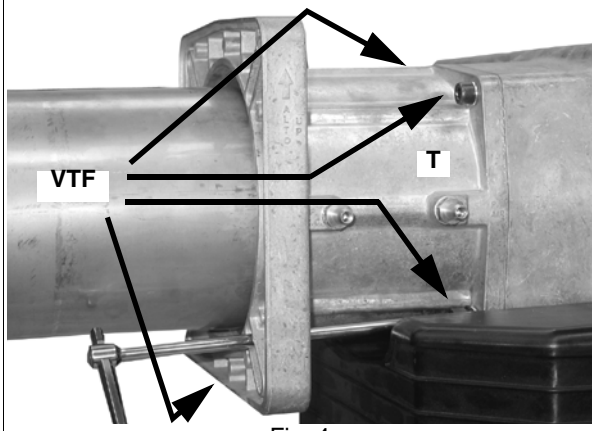

Fig. 4

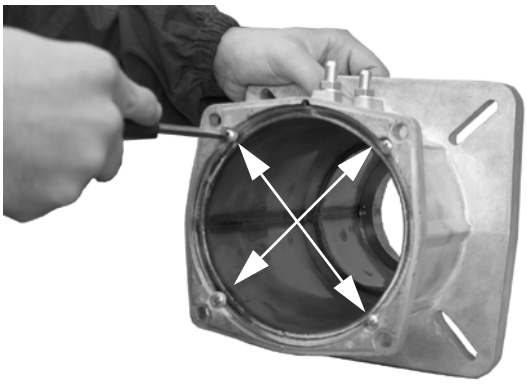
Fig. 5

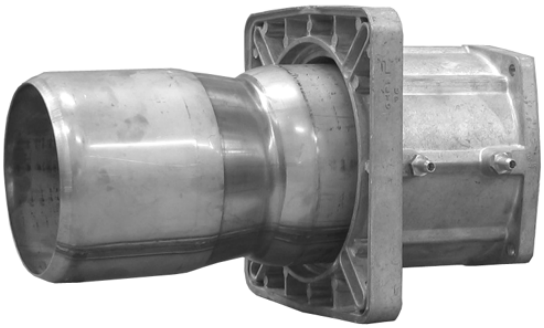
Fig. 6 - Short blast tube

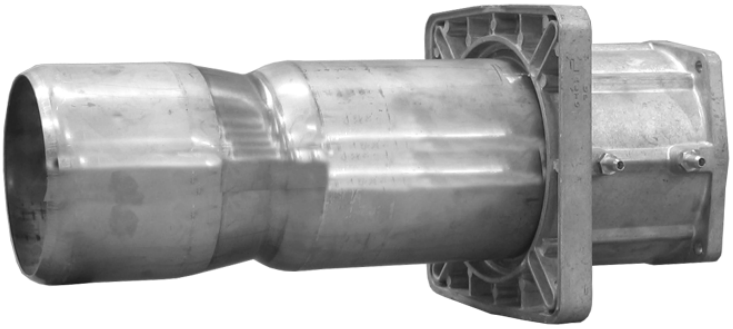
Fig. 7 - Long blast tube

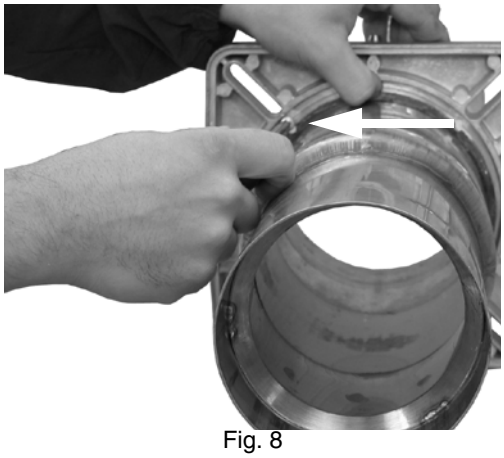
Fig. 8

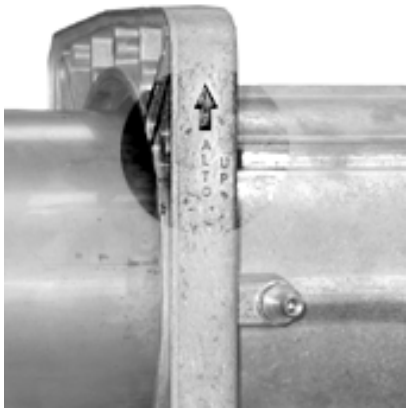
Fig. 9

If you modify the blast tube length you have to modify also the combustion head length by reading the following instructions:

1 Loosen the light oil feeding pipes connected to the nozzle-holder by using two spanners size 22 and 10 (Fig. 10).

2 Adjust cables length by pulling them very slightly as shown in Fig. 11.

3 Loosen the screw **VA** which tights the rod **A** (Fig. 12) and shift backward the flange as shown.

4 Tight the screw in the backward hole on the rod, see picture Fig. 13.

5 Fix the two extensions (supplied along with the burner inside the accessories carton box) on the light oil feeding pipes (Fig. 14) and tight them by using two spanners size 13 and 10 (Fig. 15). Fix the extensions to the nozzle holder by using two spanners size 22 and 10 (Fig. 15).

6 Assemble again the combustion head (See “Removing the combustion head” - Part III of this user’s manual).

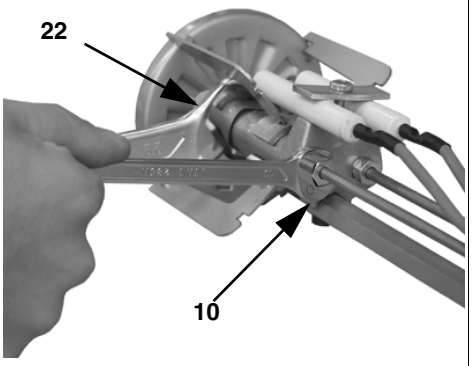

Fig. 10

Fig. 11

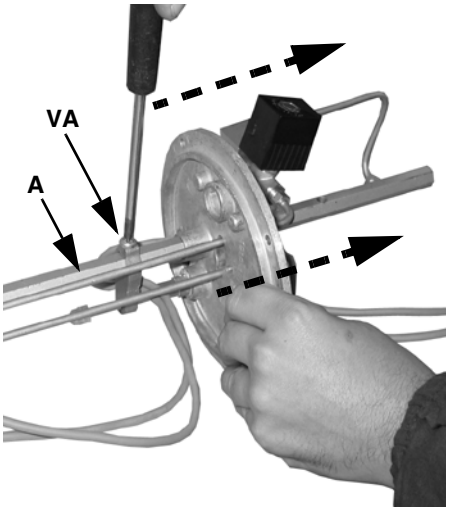

Fig. 12

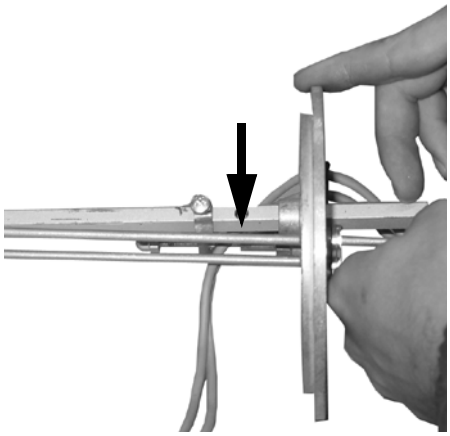

Fig. 13

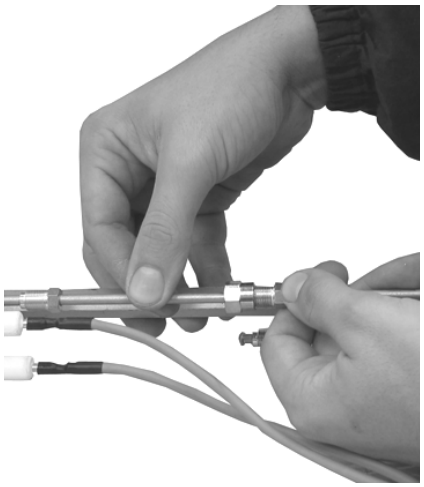

Fig. 14

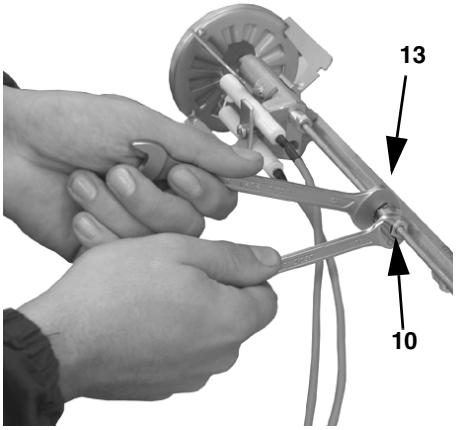

Fig. 15

MOUNTING AND CONNECTIONS

Packing

The burners are despatched in packages of dimensions 795 x 550 x 490 mm (W x H x D).

Packing cases of this kind are affected by humidity; the maximum number of cases to be stacked is indicated outside the packing .

The following are placed in each packing case:

- burner;
- light oil flexible hoses;
- light oil filter;
- gasket to be inserted between the burner and the boiler;
- envelope containing this manual.

To get rid of the burner's packing and in the event of scrapping of the latter, follow the procedures laid down by current laws on disposal of materials.

Fitting the burner to the boiler

To perform the installation, proceed as follows:

1 place the 4 stud bolts on the hole of the boiler's door, according to the burner's drilling plate described on paragraph "Overall dimensions";

2 place the gasket on the burner's flange;

3 install the burner into the boiler;

4 fix the burner to the stud bolts, by means of the fixing nuts, according to Fig. 16.

5 After fitting the burner to the boiler, ensure that the gap between the blast tube and the refractory lining is sealed with appropriate insulating material (ceramic fibre cord or refractory cement).

Key

1 Burner
2 Fixing nut
3 Washer
4 Sealing gasket
5 Stud bolt
7 Blast tube

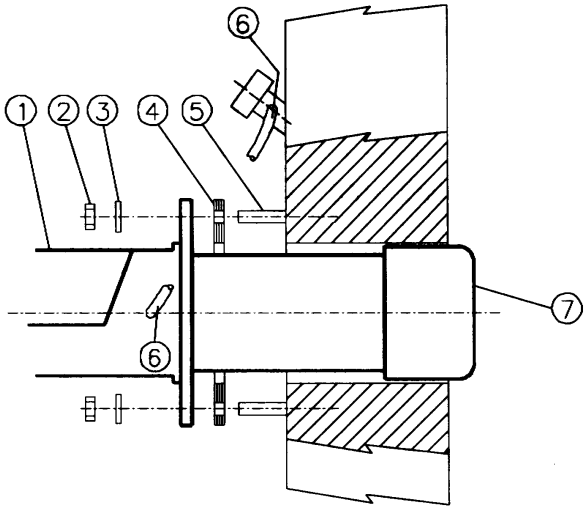

Fig. 16

Electrical connections

ATTENTION: PLEASE READ CAREFULLY THE "WARNINGS" CHAPTER, AT THE BEGINNIG OF THIS MANUAL.

Identification of linking connectors

HIGH/LOW flame connector (CONN-TAB - Fig. 20) - mod. LO400	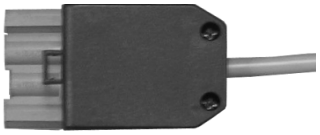 Fig. 17
Burner power supply connector (CONN-LINEA - Fig. 19)	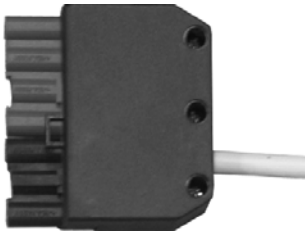 Fig. 18

IMPORTANT: before operating the burner, be sure all connectors are linked as indicated in the diagrams.

Make the electric connections following the diagrams below.

WARNING: the burner is fitted with a bridge between terminals T6 and T8 on CN2-TAB connector (external side link, male connector); remove this bridge before thermostat connection.

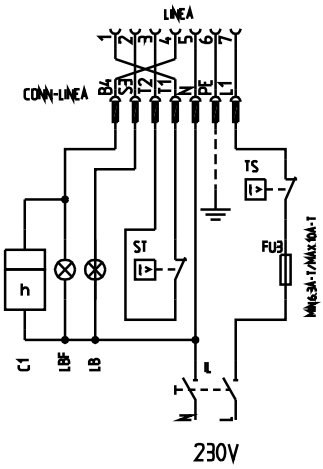

Fig. 19: Single stage burners

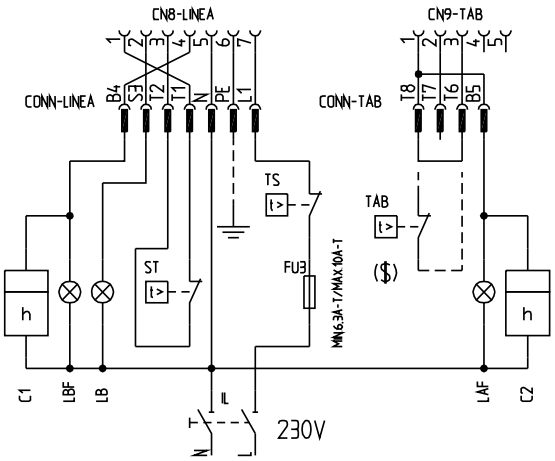

Fig. 20: High - Low flame burners

Key

C1-C2	Time counter
CONN-LINEA	Connectors on electrical board
CONN-TAB	Connectors on electrical board
F1-F3	Fuses
IL	Line switch for burner's auxiliaries
IM	Fan motor line switch
L	Phase
LAF	Burner in high flame signalling lamp (high-low flame and progressive versions only)
LB	Burner lockout signalling lamp
LBF	Burner in low flame signalling lamp (high-low flame and progressive versions only)
N	Neutral
ST	Thermostats or pressure switches group
TAB	High-Low flame thermostat
TS	Boiler safety thermostat

Installation diagram of light oil pipes

⚠ **PLEASE READ CAREFULLY THE "WARNINGS" CHAPTER AT THE BEGINNING OF THIS MANUAL.**

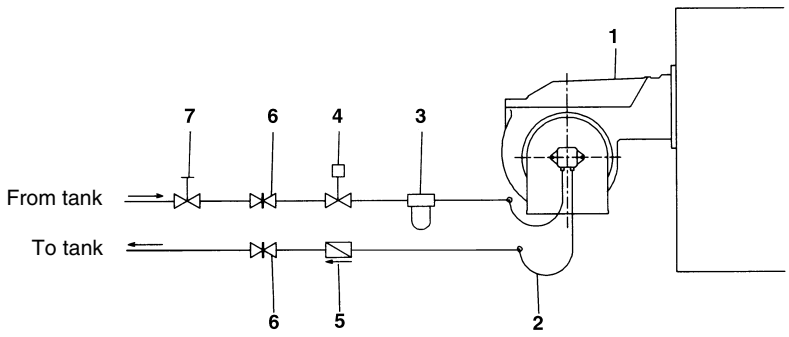

Fig. 21 - Double-pipe system

The burner is supplied with filter and flexible hoses, all the parts upstream the filter and downstream the return flexible hose, must be installed by the customer. As far as the hoses connection, see the related paragraph.

Key

1 Burner
2 Flexible hoses (fitted)
3 Light oil filter (fitted)
4 Automatic interceptor (*)
5 One-way valve (*)
6 Gate valve
7 Quick-closing gate-valve (outside the tank or boiler rooms)

(*) Only for installations with gravity, siphon or forced circulation feed systems. If the device installed is a solenoid valve, a timer must be installed to delay the valve closing.
The direct connection of the device without a timer may cause pump breaks.

Pump operating principle

In the burners, the mixture bertween oil and air, to perform a clean and efficient combustion, is activated by atomization of oil into very small particles. This process is achieved making oil passing through the nozzle at a determined pressure

The pump's main function is to transfer oil from the tank to the nozzle in the desired quantity and pressure. To adjust this pressure, pumps are provided with a pressure regulator (except for some models for which a separate regulating valve is provided).

Other pumps are provided with two pressure regulators: one for the high and one for low pressure (in tow-stage systems with one nozzle).

These pumps can be installed both into single-pipe and double-pipe systems.

Single-pipe system: a single pipe drives the oil from the tank to the pump's inlet. Then, from the pump, the pressurised oil is driven to the nozzle: a part comes out from the nozzle while the othe part goes back to the pump. In this system, the by-pass pulg, if provided, must be removed and the optional return port, on the pump's body, must be sealed by steel plug and washer.

Double-pipe system: as for the single pipe system, a pipe that connects the tank to the pump's inlet is used besides another pipe that connects the pum's return port to the tank, as well. The excess of oil goes back to the tank: this installation can be considered self-bleeding. If provided, the inside by-pass plug must be installed to avoid air and fuel passing through the pump.

Burners come out from the factory provided for double-stage systems. They can be suited for single-pipe system (recommended in the case of gravity feed) as decribed before.

Bleed

Bleeding in two-pipe operation is automatic : it is assured by a bleed flat on the piston. In one-pipe operation, the plug of a pressure gauge port must be loosened until the air is evacuated from the system.

Pipeline size

As far as the pipes installation, refer to the following values, considering as well, the plant's needs.

Syphon twin pipe feed

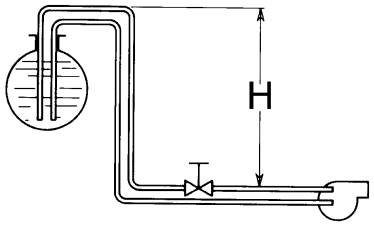

Fig. 22

Twin pipe suction feed

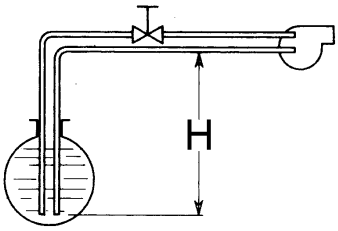

Fig. 23

SUNTEC AL65 - AS47 - AT2 45				
H (m)	**L (m)**			
	ø6	ø8	ø10	ø12
0	14	49	123	150
0,5	16	55	136	150
1	18	61	150	150
2	22	73	150	150
3	25	85	150	150
4	29	96	150	150

SUNTEC AL65 - AS47 - AT2 45				
H (m)	**L (m)**			
	ø6	ø8	ø10	ø12
0	14	49	123	150
0,5	12	44	110	150
1	10	38	96	150
2	7	26	66	140
3	3	13	13	75
4	0	1	1	15

L= Maximum pipeline length in meters, according to its size and the tank positioning.

About the use of fuel pumps

- Make sure that the by-pass plug is not used in a single pipe installation, because the fuel unit will not function properly and damage to the pump and burner motor could result.
- Do not use fuel with additives to avoid the possible formation over time of compounds which may deposit between the gear teeth, thus obstructing them.
- After filling the tank, wait before starting the burner. This will give any suspended impurities time to deposit on the bottom of the tank, thus avoiding the possibility that they might be sucked into the pump.
- On initial commissioning a "dry" operation is foreseen for a considerable length of time (for example, when there is a long suction line to bleed). To avoid damages inject some lubrication oil into the vacuum inlet.
- Care must be taken when installing the pump not to force the pump shaft along its axis or laterally to avoid excessive wear on the joint, noise and overloading the gears.
- Pipes should not contain air pockets. Rapid attachment joint should therefore be avoided and threaded or mechanical seal junctions preferred. Junction threads, elbow joints and couplings should be sealed with removable sg component. The number of junctions should be kept to a minimum as they are a possible source of leakage.
- Do not use PTFE tape on the suction and return line pipes to avoid the possibility that particles enter circulation. These could deposit on the pump filter or the nozzle, reducing efficiency. Always use O-Rings or mechanical seal (copper or aluminium gaskets) junctions if possible.
- An external filter should always be installed in the suction line upstream of the fuel unit.

Connecting the light oil flexible hoses

To connect the flexible hoses to the pump, proceed as follows.

1 Remove burner's cover.

2 Remove the light oil pump delivery and return line plugs **A** and **B**.

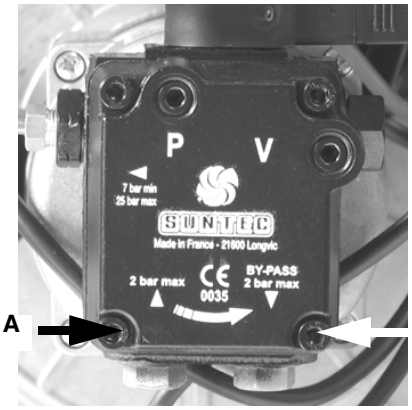

Fig. 24

mod. LO280

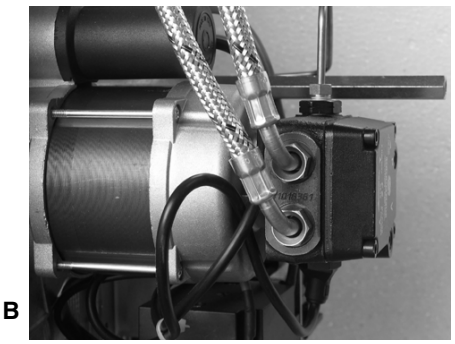

Fig. 25

mod. LO400

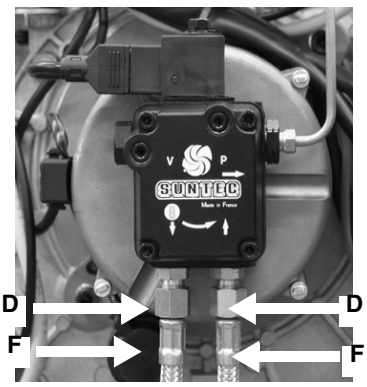

Fig. 26

3 Screw the rotating nut **D** of the two flexible hoses **F** on the pump being careful to avoid inverting the delivery and return lines.

4 Fix the flexible hoses as showed on Fig. 27.

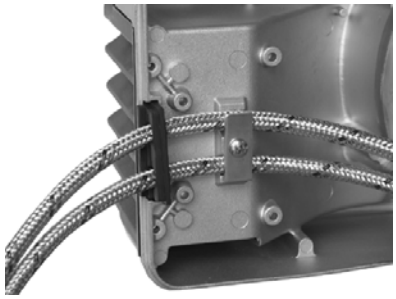

Fig. 27

5 Replace burner cover.

⚠ **WARNING: if fuel used is BIODIESEL, some components must be replaced. Please contact our Technical Department for further details.**

SETTINGS LO280

Oil rate adjustment - Single stage burners

Priming the pump

Prior to start up the burner, make sure that the return pipe to the tank is not obstructed. Any obstruction would cause the pump seal to break.

Before carrying out the adjustment it is necessary to start up the fuel pump, proceeding as follows:

1 remove the burner cover;
2 start the burner up, by turning the main switch to on;
3 make the thermostat **ST** contacts close;
4 wait for the solenoid valve to open;
5 remove the photoresistor and light it up;
6 bleed the air from the pressure gauge port (see paragraph “Light oil pumps”).

If the burner locks, press the unlock pushbutton of the burner and repeat the steps above.

The fuel flow rate is set choosing a properly dimensioned nozzle and setting the inlet pressure on the pump (see the hydraulic diagram in).

To choose the correct nozzle refer to Tab. 1, for the setting of the pump pressure, see pag. 21.

Note: all pumps are set to 12 bar. The nozzle rate must be higher than the rate referred to the minimum burner output.

Choosing oil nozzles

Key

EVG Light oil solenoid valve
M Manometer
P Pump (see chapter “LIGHT OIL PUMPS”))

Fig. 28

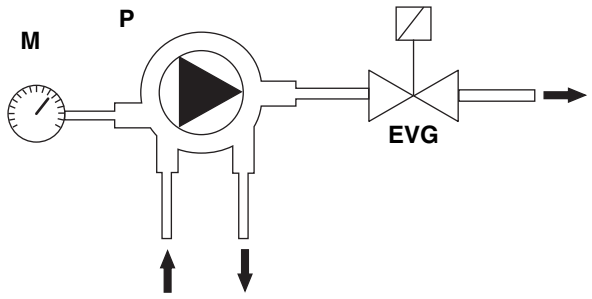

Tab. 1 - Single stage burners

NOZZLE	PUMP PRESSURE **(bar)**								
	6	7	8	9	10	11	12	13	14
G.P.H.	**kg/h**								
1,35	3,97	4,29	4,59	4,86	5,13	5,38	5,62	5,85	6,07
1,50	4,41	4,77	5,10	5,41	5,70	5,98	6,24	6,50	6,74
1,65	4,85	5,24	5,61	5,95	6,27	6,57	6,87	7,15	7,42
1,75	5,15	5,56	5,95	6,31	6,65	6,97	7,28	7,58	7,87
2,00	5,88	6,36	6,80	7,21	7,60	7,97	8,32	8,66	8,99
2,25	6,62	7,15	7,64	8,11	8,55	8,96	9,36	9,74	10,11
2,50	7,36	7,95	8,49	9,01	9,50	9,96	10,40	10,83	11,24
3,00	8,83	9,53	10,19	10,81	11,40	11,95	12,48	12,99	13,48
3,50	10,30	11,12	11,89	12,61	13,29	13,94	14,56	15,16	15,73
4,00	11,77	12,71	13,59	14,41	15,19	15,94	16,64	17,32	17,98
4,50	13,24	14,30	15,29	16,22	17,09	17,93	18,72	19,49	20,23
5,00	14,71	15,89	16,99	18,02	18,99	19,92	20,81	21,65	22,47
5,50	16,18	17,48	18,69	19,82	20,89	21,91	22,89	23,82	24,72
6,00	17,65	19,07	20,39	21,62	22,79	23,90	24,97	25,99	26,97
6,50	19,13	20,66	22,08	23,42	24,69	25,90	27,05	28,15	29,21

Oil rate adjustment - High-low flame burners

Priming the pump

Prior to start up the burner, make sure that the return pipe to the tank is not obstructed. Any obstruction would cause the pump seal to break.

Before carrying out the adjustment it is necessary to start up the fuel pump, proceeding as follows:

1 remove the burner cover;
2 start the burner up, by turning the main switch to on;
3 make the thermostat **ST** contacts close;
4 wait for the solenoid valve to open;
5 remove the photoresistor and light it up;
6 bleed the air from the pressure gauge port (see paragraph “Light oil pumps”).

If the burner locks, press the unlock pushbutton of the burner and repeat the steps above.

The light oil flow rate is adjusted choosing a nozzle of proper dimensions and setting the inlet pump pressure.
To choose the nozzle refer to the table below.

Setting the light oil pump

Adjust the ignition stage of the pump, to a pressure value of 8 - 10 bar. After 10”, the safety device switch to the second stage. The pump setting must be fixed to 24 bar, by means of the adjusting screw (see chapter “LIGHT OIL PUMPS”).
NOTE: The nozzle oil rate at a pressure of 8 bar, must be greather than the oil rate at the minimum output.

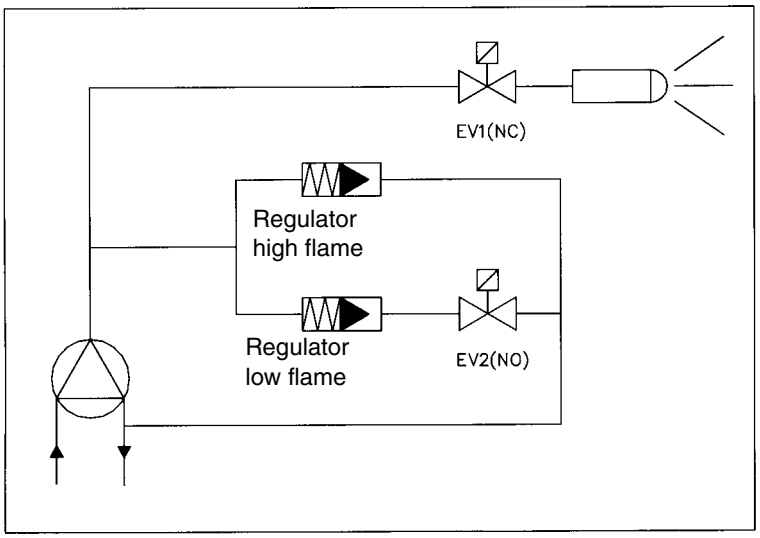

Pump adjustment for light oil:
low flame: 8÷10 bar
high flame: 24 bar

Pump adjustment for kerosene:
low flame: 6÷7 bar
high flame: 15 bar

NOZZLE	PUMP PRESSURE (bar)																	
	8	9	10	11	12	13	14	15	16	17	18	19	20	21	22	23	24	25
G.P.H.	kg/h																	
0,40	1,36	1,44	1,52	1,59	1,66	1,73	1,80	1,86	1,92	1,98	2,04	2,09	2,15	2,20	2,25	2,30	2,35	2,40
0,50	1,70	1,80	1,90	1,99	2,08	2,17	2,25	2,33	2,40	2,48	2,55	2,62	2,69	2,75	2,82	2,88	2,94	3,00
0,60	2,04	2,16	2,28	2,39	2,50	2,60	2,70	2,79	2,88	2,97	3,06	3,14	3,22	3,30	3,38	3,46	3,53	3,60
0,65	2,21	2,34	2,47	2,59	2,70	2,82	2,92	3,02	3,12	3,22	3,31	3,40	3,49	3,58	3,66	3,74	3,83	3,90
0,75	2,55	2,70	2,85	2,99	3,12	3,25	3,37	3,49	3,60	3,71	3,82	3,93	4,03	4,13	4,23	4,32	4,41	4,50
0,85	2,89	3,06	3,23	3,39	3,54	3,68	3,82	3,95	4,08	4,21	4,33	4,45	4,57	4,68	4,79	4,90	5,00	5,11
1,00	3,40	3,60	3,80	3,98	4,16	4,33	4,49	4,65	4,80	4,95	5,10	5,24	5,37	5,50	5,63	5,76	5,88	6,01
1,10	3,74	3,96	4,18	4,38	4,58	4,76	4,94	5,12	5,29	5,45	5,61	5,76	5,91	6,06	6,20	6,34	6,47	6,61
1,20	4,08	4,32	4,56	4,78	4,99	5,20	5,39	5,58	5,77	5,94	6,12	6,28	6,45	6,61	6,76	6,91	7,06	7,21
1,25	4,25	4,50	4,75	4,98	5,20	5,41	5,62	5,82	6,01	6,19	6,37	6,54	6,71	6,88	7,04	7,20	7,36	7,51
1,35	4,59	4,86	5,13	5,38	5,62	5,85	6,07	6,28	6,49	6,69	6,88	7,07	7,25	7,43	7,61	7,78	7,94	8,11
1,50	5,10	5,41	5,70	5,98	6,24	6,50	6,74	6,98	7,21	7,43	7,64	7,85	8,06	8,26	8,45	8,64	8,83	9,01
1,65	5,61	5,95	6,27	6,57	6,87	7,15	7,42	7,68	7,93	8,17	8,41	8,64	8,86	9,08	9,30	9,51	9,71	9,91
1,75	5,95	6,31	6,65	6,97	7,28	7,58	7,87	8,14	8,41	8,67	8,92	9,16	9,40	9,63	9,86	10,08	10,30	10,51
2,00	6,80	7,21	7,60	7,97	8,32	8,66	8,99	9,30	9,61	9,91	10,19	10,47	10,74	11,01	11,27	11,52	11,77	12,01
2,25	7,64	8,11	8,55	8,96	9,36	9,74	10,11	10,47	10,81	11,14	11,47	11,78	12,09	12,39	12,68	12,96	13,24	13,51
2,50	8,49	9,01	9,50	9,96	10,40	10,83	11,24	11,63	12,01	12,38	12,74	13,09	13,43	13,76	14,09	14,40	14,71	15,02
3,00	10,19	10,81	11,40	11,95	12,48	12,99	13,48	13,96	14,41	14,86	15,29	15,71	16,12	16,51	16,90	17,28	17,65	18,02
3,50	11,89	12,61	13,29	13,94	14,56	15,16	15,73	16,28	16,82	17,33	17,84	18,33	18,80	19,27	19,72	20,16	20,60	21,02
4,00	13,59	14,41	15,19	15,94	16,64	17,32	17,98	18,61	19,22	19,81	20,39	20,94	21,49	22,02	22,54	23,04	23,54	24,02
4,50	15,29	16,22	17,09	17,93	18,72	19,49	20,23	20,94	21,62	22,29	22,93	23,56	24,17	24,77	25,35	25,92	26,48	27,03

Tab. 2 - Choice of the oil nozzle - High-low flame burners

mod. LO280 Air rate setting

- **Single stage burners**

1 loosen **VR** screw.

2 move the **ID** index along the graduated slot towards + or -, in order to increase or decrease the air flow-rate, according to the required combustion values.

3 fasten the **VR** screw again.

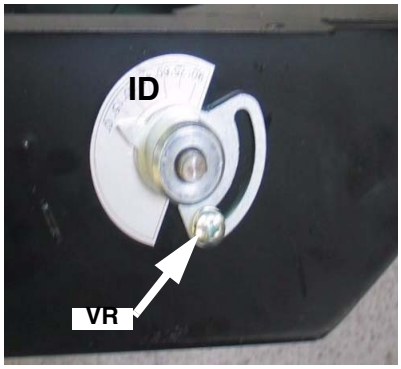

Fig. 29

- **Double stage burners**

Adjusting the actuator cams

Refer to the next table for cams functions.

Berger STA4.5

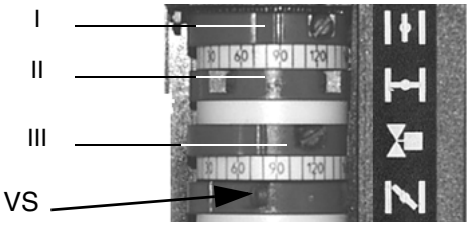

Siemens SQN72

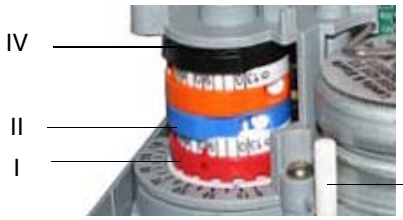

	BERGER STA	Siemens SQN72
”Air adjustment in high flame” cam	I	I (red)
Air adjustment in low flame - Stand-by - Ignition cam	II	II (blue)
EVG2 opening (2nd nozzle)	III	IV (black)

- Berger STA12: this actuator is not provided with the manual control of the air damper. The adjustment of the cams is carried out by means of a screwdriver, by twisting the **VS** screw located inside the cam.
- Siemens SQN72: a key is provided to move cams I and IV, the other cams can be moved by means of screws. On the Siemens actuator the AUTO/MAN mode is provided (see picture).

During the first setting, set the cam III (Berger) / IV (Siemens) between the cams I and II. Then, passing from the low to high flame stage, or viceversa, change the setting according to the flame composition: if cam III is too near to the low flame position (cam II), flue gas can take place, because there is more fuel than air; if cam III is too near to the high flame (cam I), the flame could fade because of too much air. .

MOD. LO400 SETTINGS

Priming the pump

Prior to start up the burner, make sure that the return pipe to the tank is not obstructed. Any obstruction would cause the pump seal to break.

Before carrying out the adjustment it is necessary to start up the fuel pump, proceeding as follows:

1 remove the burner cover;
2 start the burner up, by turning the main switch to on;
3 make the thermostat **ST** contacts close;
4 wait for the solenoid valve to open;
5 remove the photoresistor and light it up;
6 bleed the air from the pressure gauge port (see paragraph “Light oil pumps”).

If the burner locks, press the unlock pushbutton of the burner and repeat the steps above.

Fuel rate adjustment

The fuel rate is setting choosing properly sized nozzles and adjusting the fuel pressure at the pump inlet (see the diagram Fig. 30 and Fig. 31). To choose the nozzles refer to Tab. 3 and Tab. 4; for pump pressure regulation see on pag. 21. For further information on fuel pump see also the appendix.

Note: all pumps are set to 12 bar. The nozzle rate must be higher than the rate referred to the minimum burner output.

Fig. 30 - **Single stage burners**

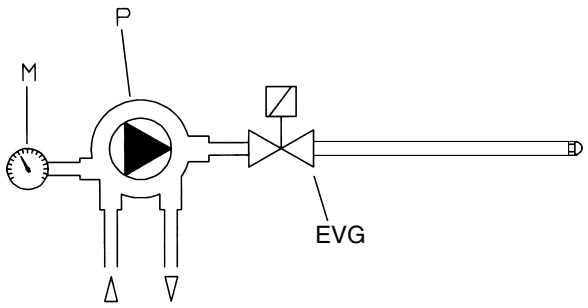

Key

EV Fuel solenoid valve
EVG1 Fuel solenoid valve - low flame

Fig. 31 - **Double stage burners**

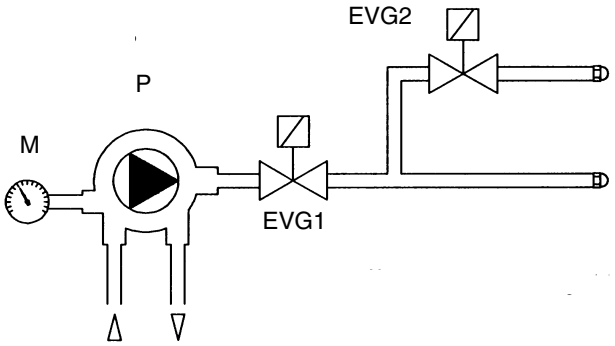

EVG2 Fuel solenoid valve - 2nd stage (only hi-lo flame burners)
M Manometer
P Pump

Choosing the light oil nozzles

Tab. 3 **LO400 Single-stage**

	PUMP PRESSURE (bar)		
	10	12	14
NOZZLE (G.P.H.)	**FUEL RATE kg/h**		
4,00	15,19	16,64	17,98
4,50	17,09	18,72	20,23
5,00	18,99	20,81	22,47
5,50	20,89	22,89	24,72
6,00	22,79	24,97	26,97
6,50	24,69	27,05	29,21
7,00	26,59	29,13	31,46
7,50	28,49	31,21	33,71
8,30	31,53	34,54	37,30
9,50	36,09	39,53	42,70

Tab. 4 **LO400 -Double-stage**

RATE		OUTPUT	PUMP PRESSURE		
kg/h	kcal/h	kW	10bar	12bar	14bar
30	306.300	356	3.50+4.50	3.00+4.00	3.00+3.50
35	357.350	416	4.00+5.00	3.50+5.00	3.50+4.00
40	408.400	475	4.50+6.00	4.00+5.50	4.00+5.00
45	459.450	534	5.00+6.50	4.50+6.00	4.00+6.00
50	510.500	594	5.50+7.50	5.00+7.00	4.50+6.50

First start and air rate setting (MOD. LO400*)*

Single stage burners

Set the air rate working on the screw **VBS** (Fig. 32); screw to decrease the air rate or unscrew to increase it.

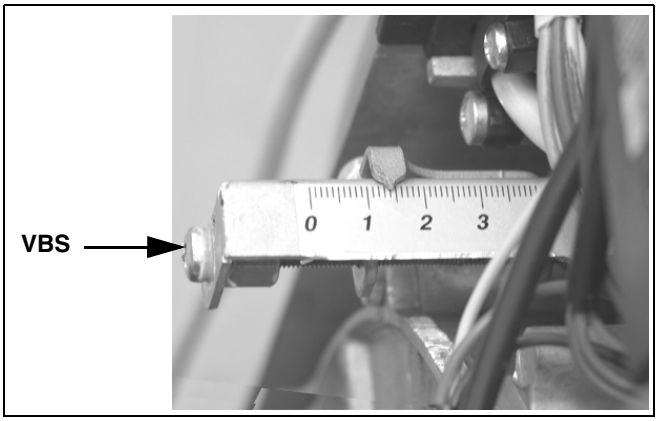

Fig. 32

Double-stage burners

- The air flow can be adjusted using the air damper servo-control cams as follows.
- Remove the burner cover cover.
- Remove the actuator cover.
- Start the burner and let it burn at low flame (remove the bridge between terminals **T6** and **T8**).
- Adjust the air flow in low flame by working on the proper cam (page 20).
- Prime the second nozzle using the following procedure:
- Start the burner
- When the flame appears press the **P1** button (Fig. 33) for a few seconds to fill the second nozzle pipe;
- The cycle continues, and if the TAB thermostat is connected, the flame control box brings the burner to high flame. If the **TAB** thermostat is not connected, bridge Terminals **T6** and **T8** on the connector (see pag. 11). Adjust the air flow at high flame by working on the appropriate cam.
- The cam that enables the opening of the 2nd stage fuel valve (valve EVG2) must be set in an intermediate position between the other two cams.
- Replace the cover on the actuator.
- Replace the burner cover.

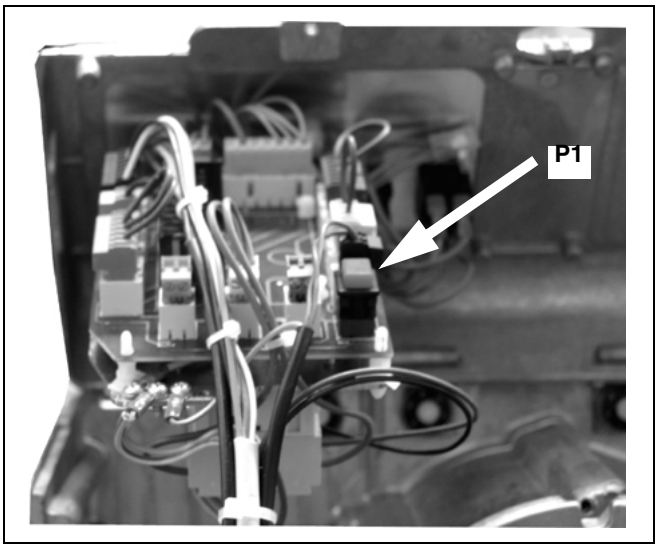

Fig. 33 - - Second nozzle ignition pushbutton on double stage burners

Connections for pressure measurement

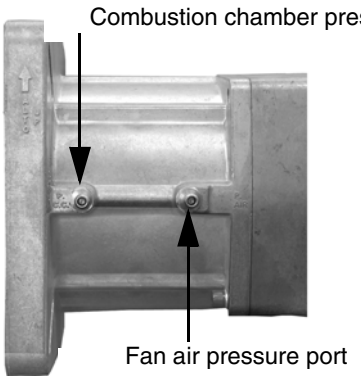

Adjusting the actuator cams

Refer to the next table for cams functions.

Berger STA4.5

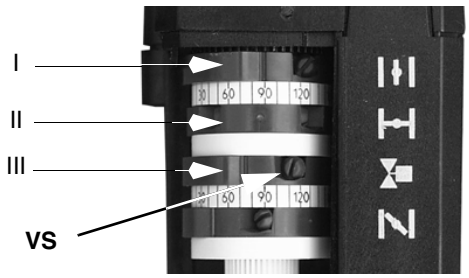

Siemens SQN72

	BERGER STA	Siemens SQN72
”Air adjustment in high flame” cam	I	I (red)
Air adjustment in low flame - Stand-by - Ignition cam	II	II (blue)
EVG2 opening (2nd nozzle)	III	IV (black)

- Berger STA12: this actuator is not provided with the manual control of the air damper. The adjustment of the cams is carried out by means of a screwdriver, by twisting the **VS** screw located inside the cam.
- Siemens SQN72: a key is provided to move cams I and IV, the other cams can be moved by means of screws. On the Siemens actuator the AUTO/MAN mode is provided (see picture).

During the first setting, set the cam III (Berger) / IV (Siemens) between the cams I and II. Then, passing from the low to high flame stage, or viceversa, change the setting according to the flame composition: if cam III is too near to the low flame position (cam II), flue gas can take place, because there is more fuel than air; if cam III is too near to the high flame (cam I), the flame could fade because of too much air.

mod. LO280 *Pumps*

Pump Suntec AS47 A

Viscosity	2 ÷ 12 mm²/s (cSt)
Fuel temperature	0 ÷ 60 °C
Maximum inlet pressure	2 bar
Minimum inlet pressure	- 0.45 bar to avoid gasing
Maximum Return pressure	2 bar
Maximum speed	3600 rpm

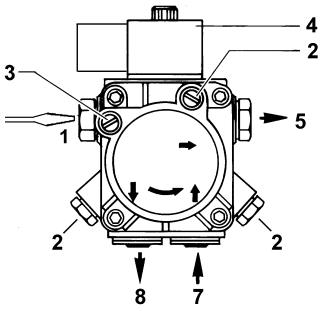

Pump Suntec AT2 45A

Viscosity range	2 ÷ 12 (cSt) mm²/s
Oil temperature max	60 °C
Inlet pressure	2 bar
	- 0.35 barto avoid gasing
Maximum return pressure	2 bar
Maximum speed	3600 rpm

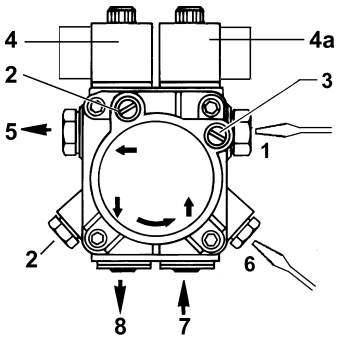

Keys for Suntec AS47 A pump

1 Pressure governor
2 Manometer
3 Vacuum gauge
4 Solenoid valve
5 Nozzle outlet
7 Suction
8 Return

Keys for Suntec A T2 45A pump

1 Low pressure regulation (first stage)
2 Manometer
3 Vacuum gauge
4 Light oil solenoid valve
4a High-low pressure solenoid valve
5 Nozzle outlet
6 High pressure regulation (second stage)
7 Suction
8 Return (with internal by-pass plug)

Pumps for mod. LO400

Pump Suntec AL65

Viscosity range	2 ÷ 12 (cSt) mm²/s
Oil temperature	0 ÷ 60 °C
Inlet pressure	2 bar
Minimum inlet pressure	- 0,45 barto avoid gasing
Maximum return pressure	2 bar
Rated speed	3600 rpm

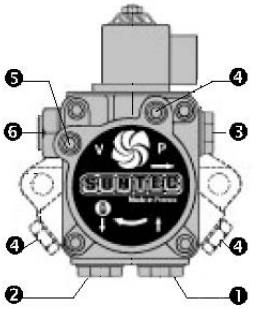

Keys

1 inlet (suction) G1/4
2 return and internal by-pass plug G1/4
3 outlet to the nozzle G1/8
4 pressure gauge port G1/8
5 vacuum gauge port G1/8
6 pressure adjusting screw

ADJUSTING THE COMBUSTION HEAD

The burner is set in the factory with the combustion head in the "MAX" position, corresponding to the maximum power (combustion head all-forward). To operate the burner at a lowest strenght, progressively shift back the combustion head, toward the "MIN" position, rotating the VRT screw clockwise (Fig. 34-Fig. 35).

LO280

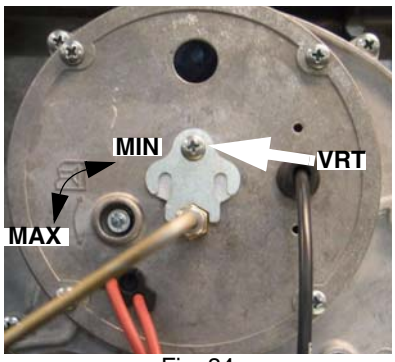

Fig. 34

LO400

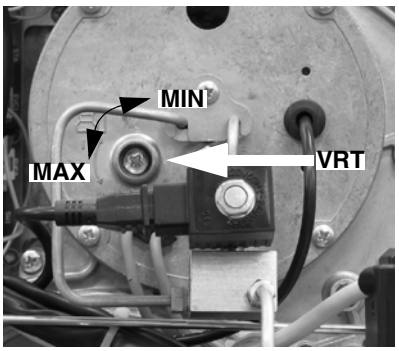

Fig. 35

Adjustments for burners with hydraulic ram

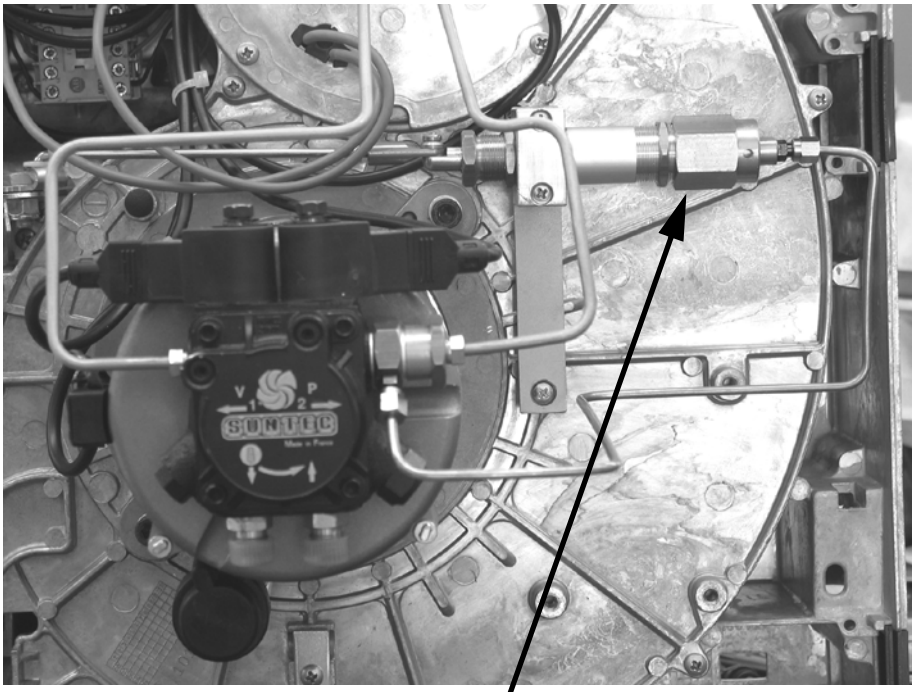

High flame air regulation **Low flame air regulation**

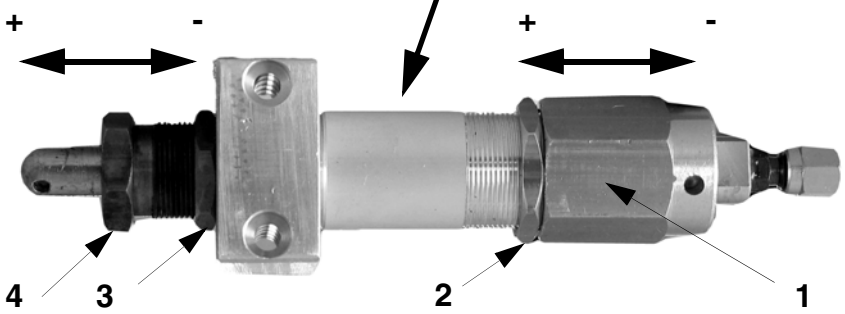

Hydraulic ram for air damper control

Air setting (the low flame air setting must be carried out first)

a) Low flame setting

To set the low flame, proceed as follow.

- Break off the contact of the second stage regulator, unloose the locking nut (2) and turn directly the body of the hydraulic ram (1). Turn clockwise to increase the air flow of the low flame stage; turn counterclockwise to decrease the air flow.
- At the end of settings, tight again the nut (2).

b) High flame setting

To set the high flame, proceed as follow.

- Close the contact of the second stage regulator and unloose the nut (3); turn the nut (4). Turning counterclockwise the high flame air flow is increased, turning clockwise the air flow is decreased.
- At the end of settings, tight again the nut (3).

NOTICE: during the step b regulations, the step a settings remain unchanged.

PART II: OPERATION

LIMITATIONS OF USE

THE BURNER IS AN APPLIANCE DESIGNED AND CONSTRUCTED TO OPERATE ONLY AFTER BEING CORRECTLY CONNECTED TO A HEAT GENERATOR (E.G. BOILER, HOT AIR GENERATOR, FURNACE, ETC.), ANY OTHER USE IS TO BE CONSIDERED IMPROPER AND THEREFORE DANGEROUS.

THE USER MUST GUARANTEE THE CORRECT FITTING OF THE APPLIANCE, ENTRUSTING THE INSTALLATION OF IT TO QUALIFIED PERSONNEL AND HAVING THE FIRST COMMISSIONING OF IT CARRIED OUT BY A SERVICE CENTRE AUTHORISED BY THE COMPANY MANUFACTURING THE BURNER.

A FUNDAMENTAL FACTOR IN THIS RESPECT IS THE ELECTRICAL CONNECTION TO THE GENERATOR'S CONTROL AND SAFETY UNITS (CONTROL THERMOSTAT, SAFETY, ETC.) WHICH GUARANTEES CORRECT AND SAFE FUNCTIONING OF THE BURNER.

THEREFORE, ANY OPERATION OF THE APPLIANCE MUST BE PREVENTED WHICH DEPARTS FROM THE INSTALLATION OPERATIONS OR WHICH HAPPENS AFTER TOTAL OR PARTIAL TAMPERING WITH THESE (E.G. DISCONNECTION, EVEN PARTIAL, OF THE ELECTRICAL LEADS, OPENING THE GENERATOR DOOR, DISMANTLING OF PART OF THE BURNER).

NEVER OPEN OR DISMANTLE ANY COMPONENT OF THE MACHINE.

OPERATE ONLY THE MAIN SWITCH, WHICH THROUGH ITS EASY ACCESSIBILITY AND RAPIDITY OF OPERATION ALSO FUNCTIONS AS AN EMERGENCY SWITCH, AND ON THE RESET BUTTON.

IN CASE OF A BURNER SHUT-DOWN, RESET THE CONTROL BOX BY MEANS OF THE RESET PUSHBUTTON. IF A SECOND SHUT-DOWN TAKES PLACE, CALL THE TECHNICAL SERVICE, WITHOUT TRYING TO RESET FURTHER.

WARNING: DURING NORMAL OPERATION THE PARTS OF THE BURNER NEAREST TO THE GENERATOR (COUPLING FLANGE) CAN BECOME VERY HOT, AVOID TOUCHING THEM SO AS NOT TO GET BURNT.

OPERATION

Single-stage burners

- Turn on the burner using the switch **A** on the control panel (: the control panel of the single stage burner is only provided with the power switch and the fuse).
- Make sure that the control box is not in shutdown condition and if so, release by using the release button **S** on the burner cover (see Fig. 37).
- Make sure that the set of thermostats (or pressure-switches) enables burner operation.
- The burner starting cycle begins and the control box starts the burner fan while the ignition transformer switches on at the same time.
- At the end of pre-ventilation, the fuel solenoid valve receives input and the burner switches on.
- The ignition transformer remains switched on for a few seconds after the ignition of the flame (post-ignition time) after which it is disconnected from the circuit.

Double-stage burners

- Turn on the burner using the switch **A** on the control panel (Fig. 36).
- Make sure that the control box is not in shutdown condition and if so, release by using the release button **S** on the burner cover (see Fig. 37).
- Make sure that the set of thermostats (or pressure-switches) enables burner operation.
- The burner starting cycle begins and the control box starts the burner fan while the ignition transformer switches on at the same time; pre-ventilation lasts for 13 or 25 seconds depending on the control box provided with the burner.
- At the end of pre-ventilation, the fuel solenoid valve (1st stage, EVG1) receives input as signalled by the illumination of the signal light **H** on the control panel and the burner starts.
- The ignition transformer remains switched on for a few seconds after the ignition of the flame (post-ignition time), after which it is disconnected from the circuit and the corresponding signal light switches off.
- In this way, the burner is lit at low flame; after 5 or 15 seconds (depending on the control box installed) two-stage operation begins and the burner is either automatically brought to high flame (light **G** on) or remains burning at low flame (light H on) depending on the requests received from the system.

Burner control panel

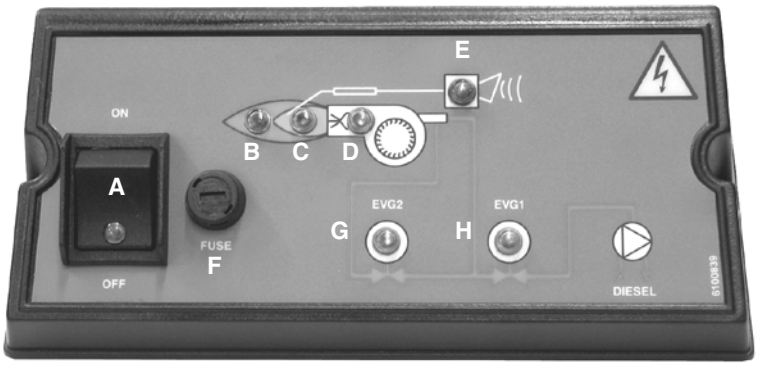

Fig. 36

Keys

A	Main switch
B	High flame lamp
C	Low flame lamp
D	Ignition transformer ligh
E	Lockout signalling lamp
F	Fuse
G	High flame solenoid valve operation light
H	Low flame solenoid valve operation light
S	Reset pushbutton (Fig. 37)

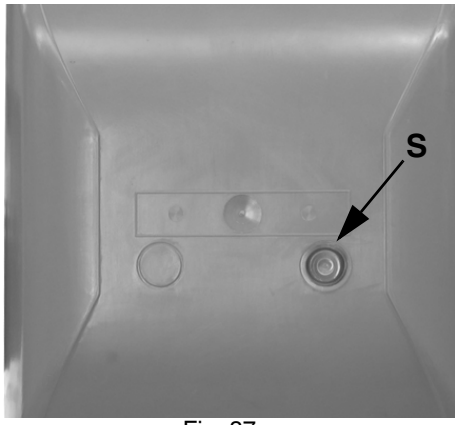

Fig. 37

PART III: MAINTENANCE

At least once a year carry out the maintenance operations listed below. In the case of seasonal servicing, it is recommended to carry out the maintenance at the end of each heating season; in the case of continuous operation the maintenance is carried out every 6 months.

⚠	**WARNING: ALL OPERATIONS ON THE BURNER MUST BE CARRIED OUT WITH THE MAINS DISCONNECTED AND THE FUEL MANAUL CUTOFF VALVES CLOSED!**
	ATTENTION: READ CAREFULLY THE "WARNINGS" CHAPTER AT THE BEGINNIG OF THIS MANUAL..

⚠ **PLEASE, READ CAREFULLY "WARNINGS" CHAPTER, AT THE BEGINNING OF THIS MANUAL.**

ROUTINE OPERATIONS

- Inspection and cleaning of the light oil filter cartdrige; replace it if necessary.
- Check the overall condition of the flexible light oil hoses and make sure there are no signs of leakage;
- Inspection and cleaning of the filter inside the light oil pump: filter must be thoroughly cleaned at least once in a season to ensure correct working of the fuel unit. To remove the filter, unscrew the four screws on the cover. When reassemble, make sure that the filter is mounted with the feet toward the pump body. If the gasket between cover and pump housing should be damaged, it must be replaced. An external filter should always be installed in the suction line upstream of the fuel unit.
- Disassembly, inspection and cleaning of the combustion head. Respect the measurements listed on pag. 30 carefully during re-assembly.
- Inspection and cleaning of ignition electrodes (pag. 28) and respective ceramic insulators: clean, adjust, and replace if necessary.
- Disassemble and clean the light oil nozzles (pag. 28).

⚠ **IMPORTANT: cleaning must be performed using solvent, not metal tools!**

At the end of maintenance operations after first reassembling the burner, light the flame and check its shape, replacing the nozzle whenever a questionable flame shape appears. Whenever the burner is used intensely, we recommend preventively replacing the nozzle at the start of each heating season;

- Inspect and thoroughly clean the flame detection photoresistor and replace if necessary. In case of doubt, check the detection current after first starting the burner by following the procedure illustrated in Fig. 56.
- Clean and grease levers and rotating parts.

Removing the combustion head

- Remove the burner's cover by unscrewing the fixing screws.
- Slacken the light oil pipes **T1** and **T2** from the pump (Fig. 38).
- Disconnect the ignition cables **CA1** and **CA2** from the transformer **TA** (Fig. 39).
- Remove the 4 screws **V1** - **V4** shown in Fig. 41.
- Disconnect the connector **CE** fron the solenoid valve **EV2**

⚠ **ATTENTION: the screw V1 is longer than the other and must be replaced in the same position!**

- Withdraw the photoelectric cell **FR** from its housing (Fig. 42).

⚠ **ATTENTION: avoid to withdraw the photoelectric cell drawing its cable!**

- Remove the combustion head from its housing .
- Clean the combustion head by a compressed air blow or, in case of scale, scrape it off by a scratchbrush.
- Replace the combustion head.
- Replace the burner's cover.

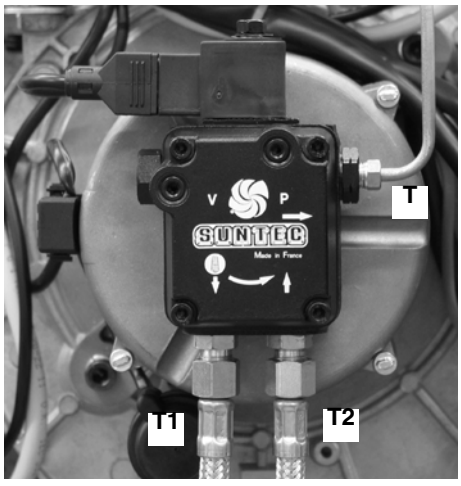

Fig. 38

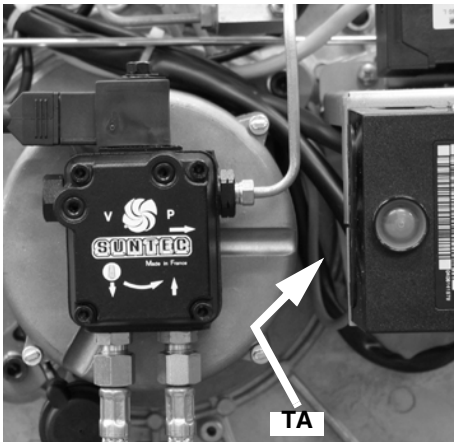

Fig. 39

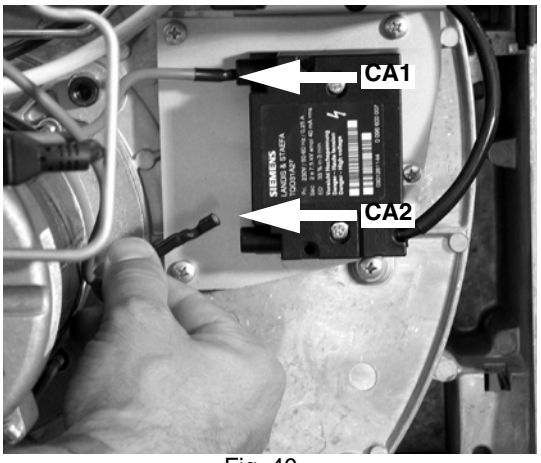

Fig. 40

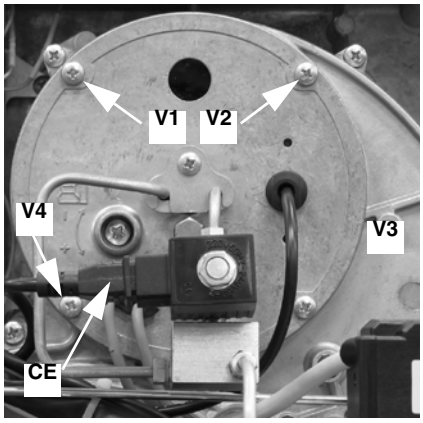

Fig. 41

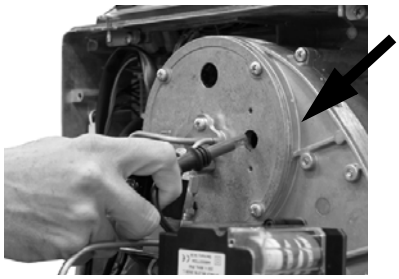

Fig. 42

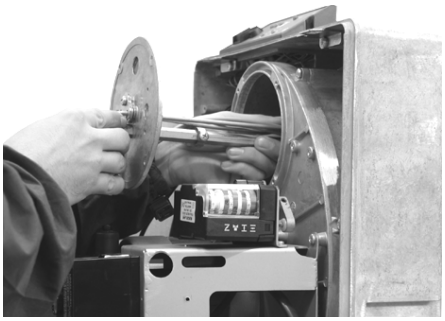

Fig. 43

Removing burner components plate

- Remove the combustion head (see “Removing the combustion head” on page 25).
- Remove the 7 screws **V5** - **V11** which fasten the components plate (Fig. 44).
- Remove the rod **T** from its housing as shown in Fig. 45.
- Hook the burner components plate as shown in Fig. 46.

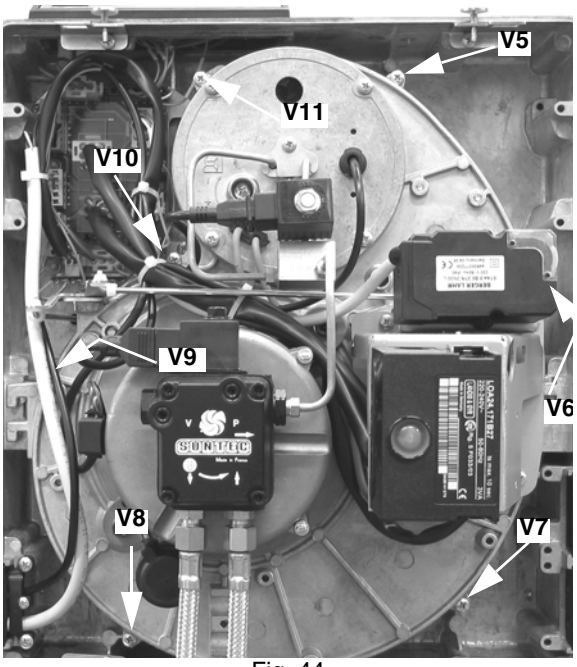

Fig. 44

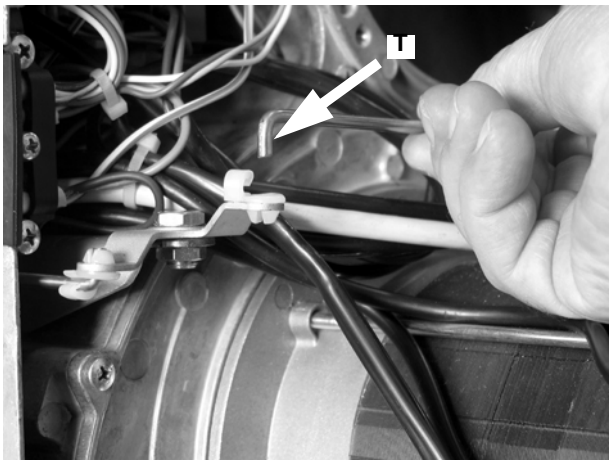

Fig. 45

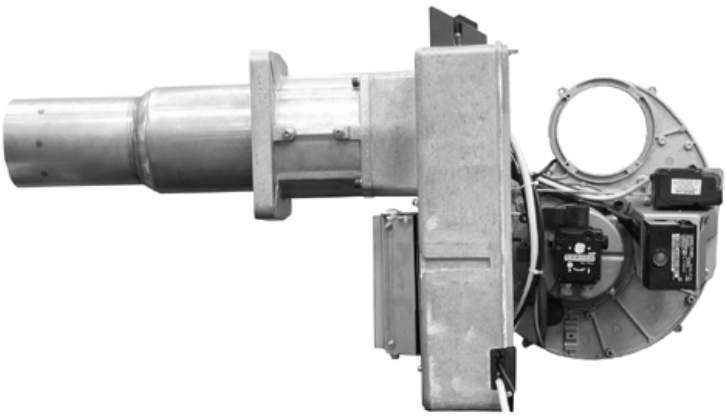

Fig. 46

Assembling burner components plate

- Reassemble burner components plate and tighten the 6 screws **V5** - **V11** (Fig. 44).
- Refit the rod **T** (Fig. 45).
- Reassemble the combustion head and tighten the 4 screws **V1** - **V4** (Fig. 41).

Removing the electrodes

- Remove the combustion head (see “Removing the combustion head” on page 25).
- Withdraw the screw **VE** and remove the electrodes from the support (Fig. 47 - Fig. 48).

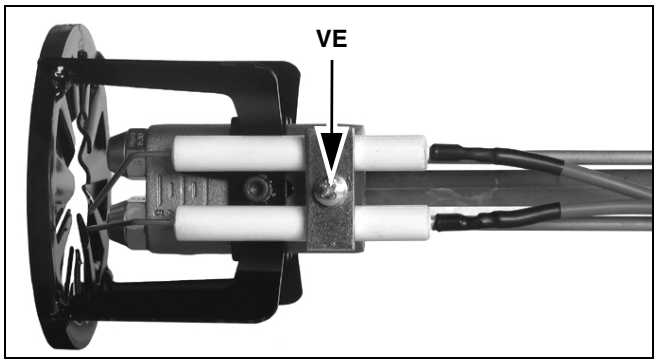

Fig. 47 - **Double-stage burner**

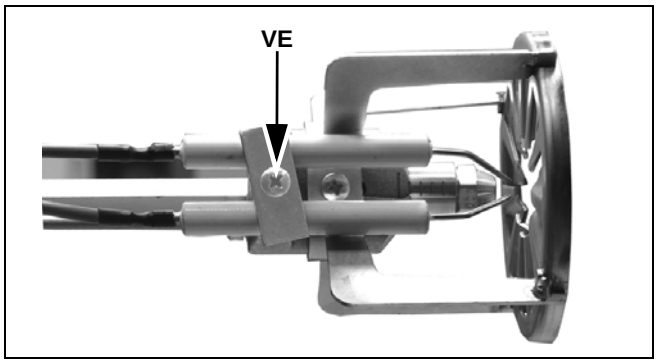

Fig. 48 - **Single-stage burner**

Disassembly of the nozzle mod. LO280

- Loose screw V that fasten the combustion head and remove the head from the nozzle holder (Fig. 49 - Fig. 50).

In order to remove the nozzle, it is important to use two wrenches as shown in , to avoid damaging the burner component plate!

- Replace the combustion head paying attention to the position **A** measured before, remembering to fasten screw **V**.

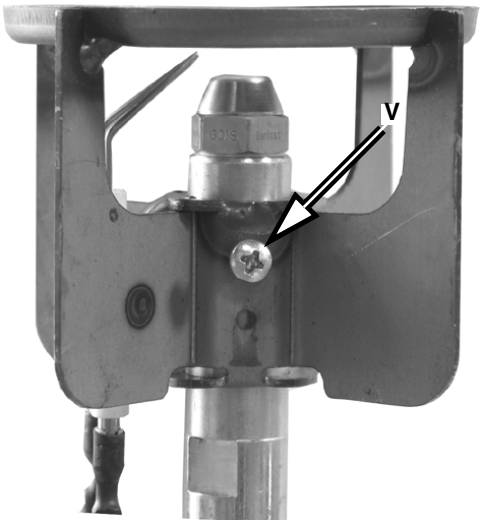

Fig. 49

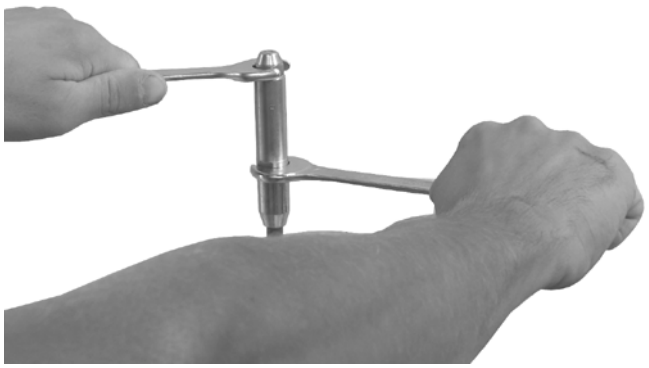

Fig. 50

Removing the nozzles LO400

- Unscrew the Allen screw **VT** and remove the combustion head **TC** (as shown on Fig. 51-Fig. 52).
- Unscrew the nozzles using two wrenches (16 and 24 mm), as shown in Fig. 53.

Double stage burners

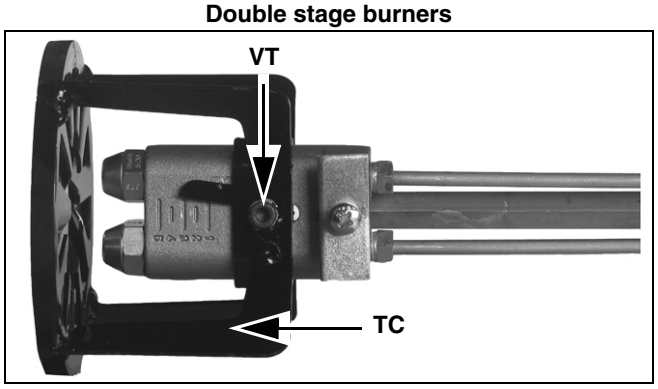

Fig. 51

Single stage burners

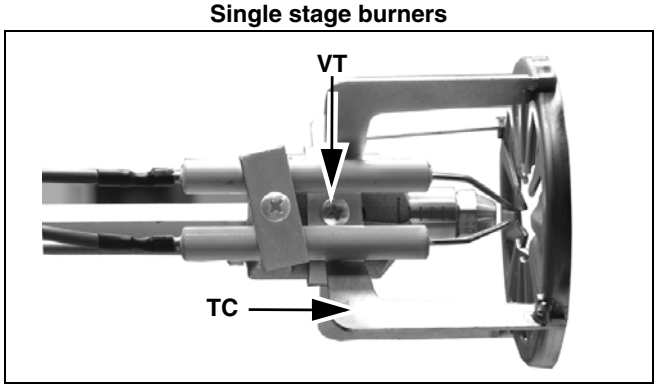

Fig. 52

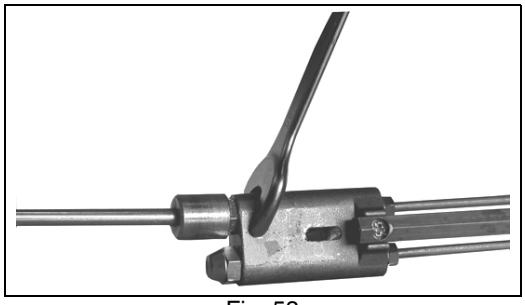

Fig. 53

Correct position of electrodes and combustion head

To ensure a good ignition, respect the measures in Fig. 54 - Fig. 55.

Single stage burners (mod. LO280-LO400) and Double stage burners (mod. LO280)

A 8 ÷ 10 mm
B 4,5 ÷ 6 mm
C 10 mm
D 6.5 mm

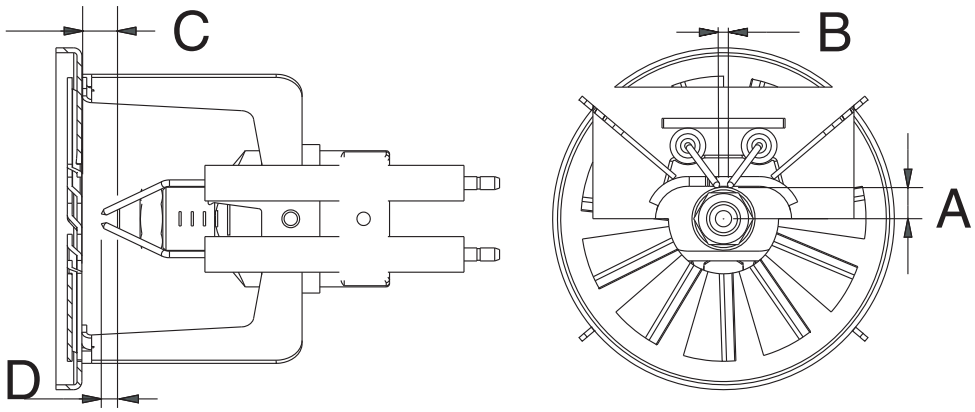

Fig. 54

Double-stage burners (mod. LO400)

A 8 ÷ 10 mm
B 4,5 ÷ 6 mm
C 8 mm
D 5 mm

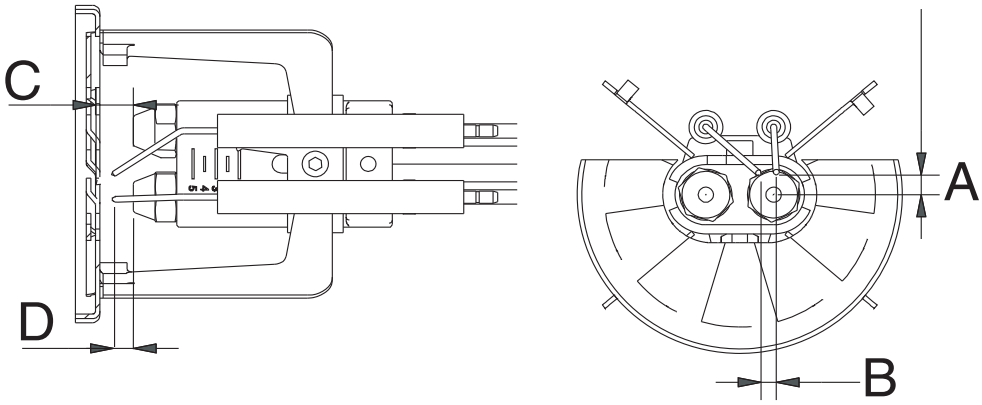

Fig. 55

Check the detection current

See the diagram in Fig. 56 to measure the detection current. If the signal doesn't suit the suggested value, check the electric terminal, the cleaning of the combustion head and the position of the photoelectric cell; replace it if necessary.

..

Minimum current intensity with flame	45 µA
Maximum current intensity without flame	5 µA
Maximum possible current intensity with flame	45 µA (LOA..) 100 µA (LMO..)

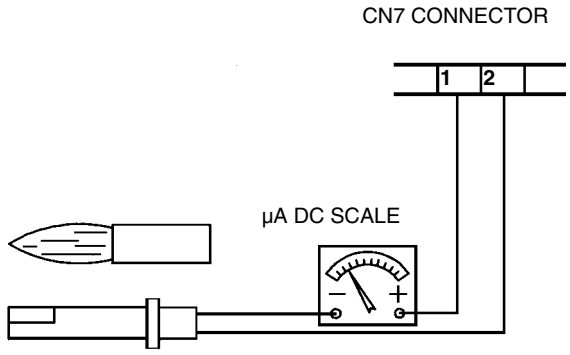

Fig. 56

Control box	Minimum detection signal
Siemens LMO	70µA (with UV detector)
Siemens LMV2 / 3x	Intensity of flame (parameter 954) >16%

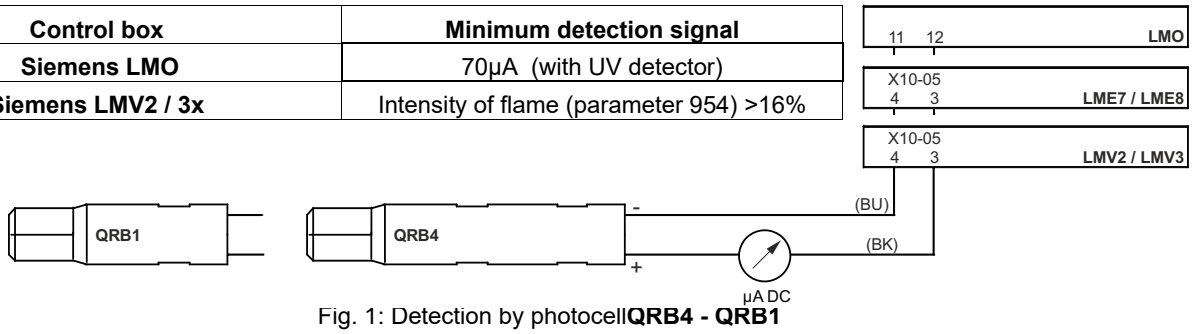

Fig. 1: Detection by photocell**QRB4 - QRB1**

TROUBLESHOOTING

	BURNER DOESN'T START	REPETITION OF PRE-PURGE	NOISY FUEL PUMP	BURNER DOESN'T START AND LOCKS	BURNER STARTS AND LOCKS	BURNER DOESN'T SWITCH TO HIGH FLAME	BURNER LOCK DURING OPERATION	BURNER LOCKS AND REPEATS CYCLE DURING OPERATION
MAINS SWITCH OPEN	●							
FUSES INTERVENTION	●							
MAXIMUM PRESSURE SWITCH FAULT	●							●
INTERVENTION OF THE FAN MOTOR THERMAL CUTOUT	●							
AUXILIARIES RELAY FUSES INTERVENTION	●							
FLAME CONTROL BOX FAULT	●	●		●	●		●	
SERVOCONTROL FAULT						●		
SMOKY FLAME					●		●	
IGNITION TRANSFORMER FAULT				●				
IGNITION ELECTRODE DIRTY OR BAD POSITION				●				
DIRTY NOZZLE				●				
FUEL SOLENOID VALVE DEFECTIVE				●			●	
PHORESISTANCE DIRTY OR DEFECTIVE					●		●	
HIGH - LOW FLAME THERMOSTAT DEFECTIVE						●		
BAD POSITION OF ACTUATOR CAMS						●		
FUEL LOW PRESSURE				●				
FUEL FILTERS DIRTY			●	●			●	

Seasonal stop

To stop the burner in the seasonal stop, proceed as follows:

1 turn the burner main switch to 0 (Off position)
2 disconnect the power mains
3 close the fuel valve of the supply line

Burner disposal

In case of disposal, follow the instructions according to the laws in force in your country about the “Disposal of materials”.

LO280 - BURNER EXPLODED VIEW

POS.	DESCRIPTION
1.1	MOTOR SUPPORT PLATE
1.2	FLANGED PIPE
1.3	BURNER HOUSING
2	GENERATOR GASKET
3	COVER
4	MOTOR
5	FAN WHEEL
6	STANDARD BLAST TUBE
7	PUMP
8.1	LONG IGNITION ELECTRODE
8.2	NOZZLE
8.3	COMBUSTION HEAD
8.4	NOZZLE HOLDER
8.5	FLANGE
8.7	IGNITION CABLE
9	AIR DAMPER ASSEMBLY
10	INDEX
11.1	BRACKET
11.2	CONTROL BOX
11.3	IGNITION TRANSFORMER
12	FRONT CONTROL PANEL
13.1	BRACKET
13.2	ACTUATOR

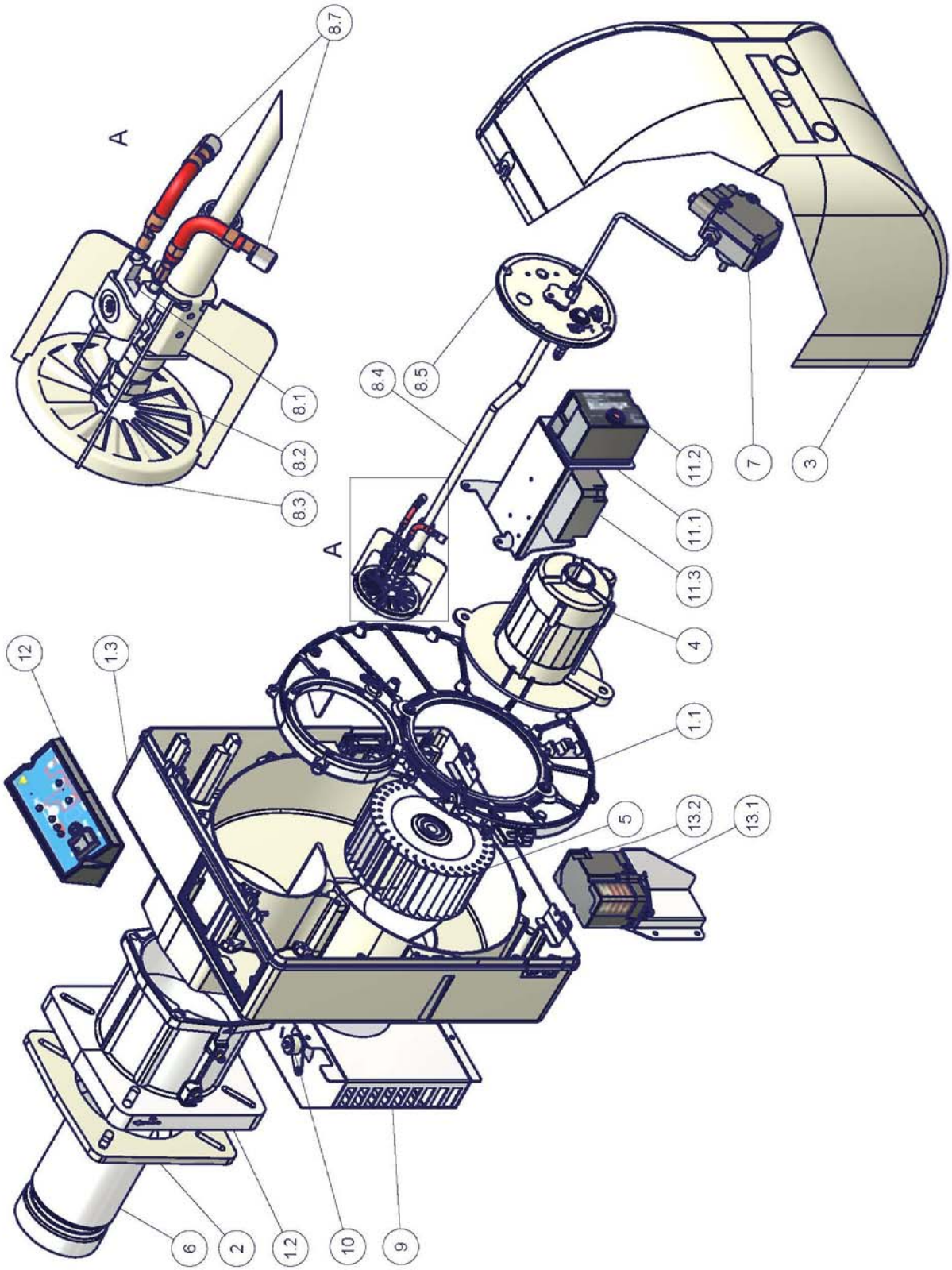
8.7
A
8.1
8.2
8.3
8.4
8.5
A
11.2
11.1
11.3
7
3
4
12
1.3
1.1
5
13.2
13.1
6
2
1.2
10
9

SPARE PARTS

DESCRIPTION	CODE				
	LO280 Single stage	**LO280** Double stage	**LO280** Double stage with hydraulic ram	**LO400** Single stage	**LO400** Double stage
COVER	1011803	1011803	1011803	1011803	1011803
LOA24 CONTROL BOX	2020445	2020445	2020445	2020445	2020445
LMO24 CONTROL BOX	2020453	2020453	2020453	2020453	2020453
IGNITION ELECTRODES	2080283	2080283	2080259+2080260	2080259	2080259+2080260
FUEL FILTER	2090001	2090001	2090001	2090025	2090025
GASKET	2110059	2110059	2110059	2110059	2110059
FAN WHEEL	2150071	2150071	2150071	2150060	2150060
IGNITION TRANSFORMER	2170231	2170231	2170231	2170231	2170231
ELECTRIC MOTOR	2180717	2180717	2180717	2180714	2180714
EVG2 SOLENOID VALVE	-	-	2190638	-	2190638
HYDRAULIC RAM		-	2330053	-	2330053
FLEXIBLE HOSES	234FX22	234FX22	234FX22	2340001	2340001
ACTUATOR - BERGER	-	2480057	-	-	2480057
ACTUATOR - SIEMENS	-	24800A3	-	-	24800A3
PHOTORESISTOR	2510034	2510033	2510033	2510033	2510033
MOTOR-PUMP COUPLING	2540055	2540055	2540055	2540055	2540055
EVG1 COIL	2580402	2580402	2580402	2580402	2580402
EVG2 COIL	-	2580402	-	-	-
PUMP	2590130	2590152	2590130	2590170	2590170
NOZZLES	261...	261...	261...	261...	261...
COMBUSTION HEAD	30601C5	30601C5	30601E1	30601A1	30601A0
BLAST TUBE	Standard: 30900L3 Extended:30900L4	Standard: 30900L3 Extended:30900L4	Standard: 30900L3 Extended:30900L4	30900G2	30900G2
IGNITION CABLES	6050153	6050153	6050153	6050153	6050153
PRINTED CIRCUIT BOARD	-	6100547	6100547	6100542	6100542

NOTE: it is recommended to mention the burner ID number on the spare parts request form.

WIRING DIAGRAMS

Wiring diagram 04-743 - LO280 - Single stage burners

Wiring diagram 18-116 - LO280 Double stage burners-

Wiring diagram 18-049 - LO400

Keys

C1	LOW FLAME TIME METER
C2	HIGH FLAME TIME METER
EVG	LIGHT OIL ELECTRO-VALVE
FR	PHOTORESISTOR FLAME DETECTOR
FU1	FAN MOTOR LINE FUSE
FU2	LINE FUSE
FU3	BURNER LINE FUSE
IL	BURNER LINE SWITCH
IM	FAN MOTOR LINE SWITCH
KA2.3	AUXILIARY RELAY
KA2.4	AUXILIARY RELAY
KM1.1	FAN MOTOR CONTACTOR
KT2.4	DELAYED RELAY
LAF	BURNER IN HIGH FLAME INDICATOR LIGHT
LMO 24/44	SIEMENS CONTROL BOX
LOA24/44	SIEMENS CONTROL BOX
LB	INDICATOR LIGHT FOR BURNER LOCK-OUT
LBF	BURNER IN LOW FLAME INDICATOR LIGHT
LEVG1	INDICATOR LIGHT FOR OPENING OF ELECTRO-VALVE [EVG1]
LTA	IGNITION TRANSFORMER INDICATOR LIGHT
MV	FAN MOTOR
PS	LOCK-OUT RESET BUTTON (WITH LOA44 AND LMO.. ONLY)
SATRONIC DKO976 - DKW976	CONTROL BOX
SATRONIC DKW972	CONTROL BOX
SATRONIC TF976	CONTROL BOX
ST	SERIES OF THERMOSTATS OR PRESSURE SWITCHES
SW1	II° STAGE BURNER START BUTTON
TA	IGNITION TRANSFORMER
TAB	HIGH-LOW THERMOSTAT/PRESSURE SWITCHES
TS	SAFETY THERMOSTAT OR PRESSURE SWITCH

($) IF "TAB" USED REMOVE THE BRIDGE BETWEEN TERMINALS T6-T8

WARNING

1 - Electrical supply 230V 50/60Hz 1N a.c.

2 - Do not reverse phase with neutral

3 - Ensure burner is properly earthed

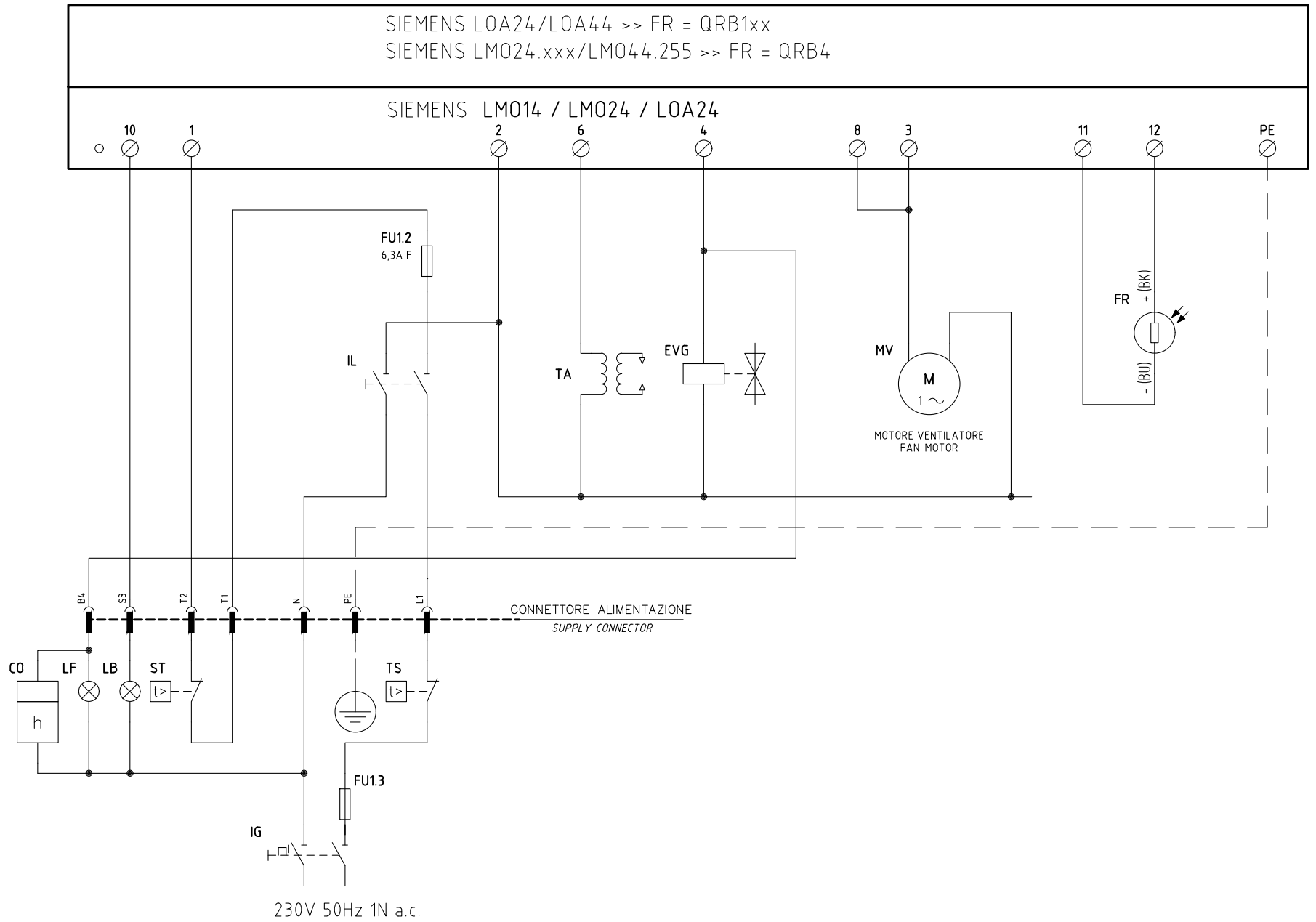

Data 18/11/2006		PREC.	FOGLIO
Revisione 02		/	1
Dis. N. 04 – 0743		SEGUE	TOTALE
		2	2

0	1	2	3	4	5	6	7	8	9

Sigla/Item	Funzione	Function
CO	CONTAORE DI FUNZIONAMENTO (OPTIONAL)	OPERATION TIME COUNTER (OPTIONAL)
EVG	ELETTROVALVOLA GASOLIO	LIGHT OIL SOLENOID VALVE
FR	SONDA RILEVAZIONE FIAMMA	FLAME DETECTOR PROBE
FU1.2	FUSIBILE DI LINEA	LINE FUSE
FU1.3	FUSIBILE DI LINEA	LINE FUSE
IG	INTERRUTTORE GENERALE	MAINS SWITCH
IL	INTERRUTTORE LINEA BRUCIATORE	BURNER LINE SWITCH
LB	LAMPADA SEGNALAZIONE BLOCCO BRUCIATORE	INDICATOR LIGHT FOR BURNER LOCK-OUT
LF	LAMPADA SEGNALAZIONE FUNZIONAMENTO BRUCIATORE	INDICATOR LIGHT BURNER OPERATION
LOA.../ LMO...	APPARECCHIATURA CONTROLLO FIAMMA	CONTROL BOX
MV	MOTORE VENTILATORE	FAN MOTOR
ST	SERIE TERMOSTATI/PRESSOSTATI	SERIES OF THERMOSTATS OR PRESSURE SWITCHES
TA	TRASFORMATORE DI ACCENSIONE	IGNITION TRANSFORMER
TS	TERMOSTATO/PRESSOSTATO DI SICUREZZA	SAFETY THERMOSTAT OR PRESSURE SWITCH

Data 18/11/2006		PREC.	FOGLIO
Revisione 02		1	2
Dis. N. 04 – 0743		SEGUE	TOTALE
		/	2

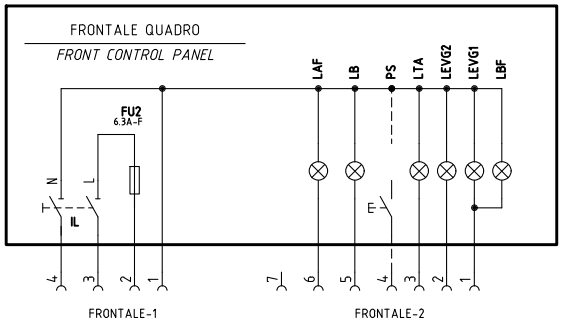

SIEMENS LOA24/LOA44 >> FR = QRB1xx
SIEMENS LM024.xxx/LM044.255 >> FR = QRB4

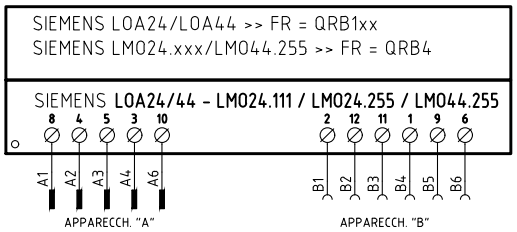

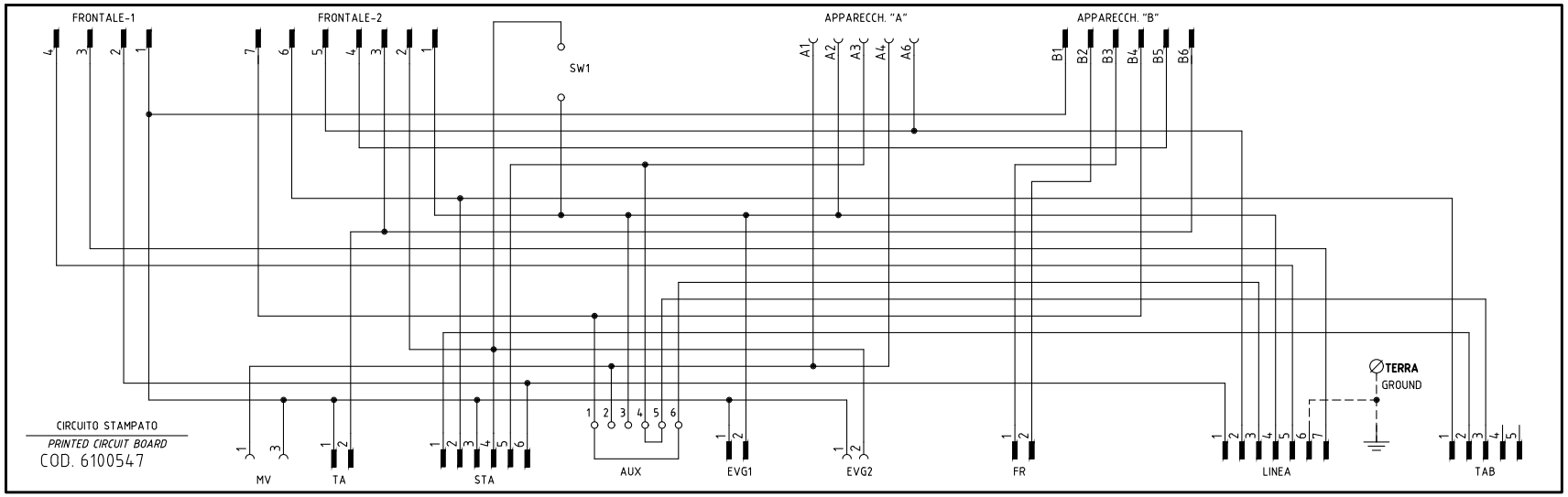

SERVOCOMANDO SERRANDA ARIA
AIR DAMPER ACTUATOR
STA4.5B0.37/63N30L

I ALTA FIAMMA
HIGH FLAME
II SOSTA, ACCENSIONE E BASSA FIAMMA
STAND-BY, IGNITION AND LOW FLAME
III APERTURA EVG2
OPEN EVG2

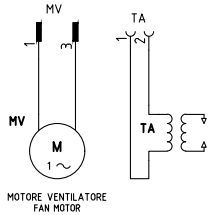

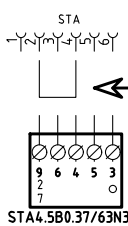

VERSIONE CON MARTINETTO IDRAULICO
WITH HYDRAULIC RAM VERSION

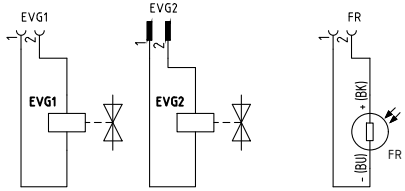

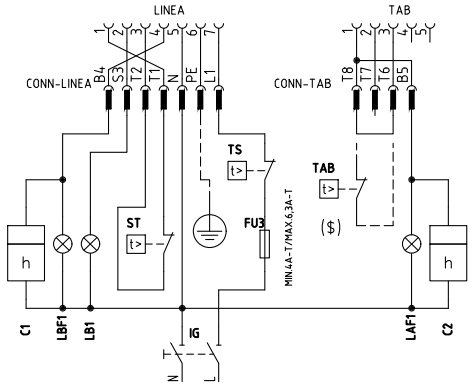

230V 1N a.c.

SERVOCOMANDO SERRANDA ARIA (ALTERNATIVO)
AIR DAMPER ACTUATOR (ALTERNATIVE)
SQN72.2A4A20

I (ROSSO) *I (RED)* ALTA FIAMMA *HIGH FLAME*
II (BLU) *II (BLUE)* SOSTA, ACCENSIONE E BASSA FIAMMA *STAND-BY, IGNITION AND LOW FLAME*
IV (NERO) *IV (BLACK)* APERTURA EVG2 *OPEN EVG2*

($)
SE USATO "TAB", TOGLIERE IL PONTE TRA I MORSETTI [T6-T8]
IF USED "TAB", REMOVE THE BRIDGE BETWEEN TERMINALS [T6-T8]

Data 08/01/2007		PREC.	FOGLIO
Revisione 05		/	1
Dis. N. 18 – 0116		SEGUE	TOTALE
		2	2

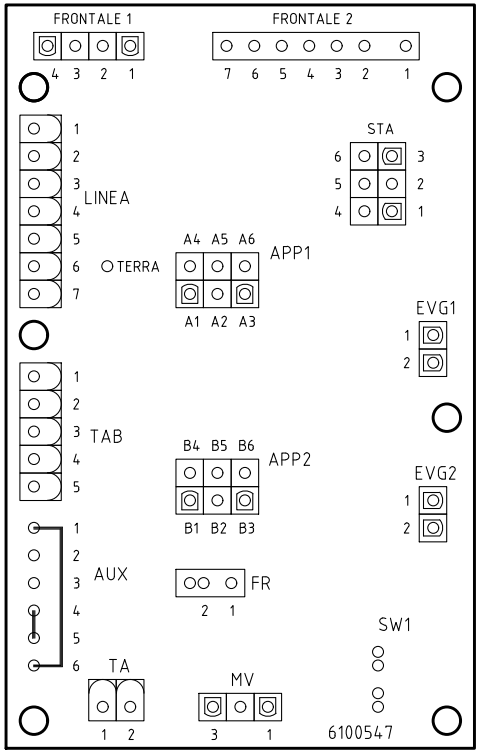

Sigla/Item	Funzione	Function
C1	CONTAORE BASSA FIAMMA	LOW FLAME TIME COUNTER
C2	CONTAORE ALTA FIAMMA	HIGH FLAME TIME COUNTER
EVG1	ELETTROVALVOLA GASOLIO BASSA FIAMMA	LOW FLAME LIGHT OIL SOLENOID VALVE
EVG2	ELETTROVALVOLA GASOLIO ALTA FIAMMA	HIGH FLAME LIGHT OIL SOLENOID VALVE
FR	SONDA RILEVAZIONE FIAMMA	FLAME DETECTOR PROBE
FU2	FUSIBILE DI LINEA	LINE FUSE
FU3	FUSIBILE LINEA BRUCIATORE	BURNER LINE FUSE
IG	INTERRUTTORE GENERALE	MAINS SWITCH
IL	INTERRUTTORE LINEA AUSILIARI	AUXILIARY LINE SWITCH
LAF	LAMPADA SEGNALAZIONE ALTA FIAMMA BRUCIATORE	BURNER IN HIGH FLAME INDICATOR LIGHT
LAF1	LAMPADA SEGNALAZIONE ALTA FIAMMA BRUCIATORE	BURNER IN HIGH FLAME INDICATOR LIGHT
LB	LAMPADA SEGNALAZIONE BLOCCO BRUCIATORE	INDICATOR LIGHT FOR BURNER LOCK-OUT
LB1	LAMPADA SEGNALAZIONE BLOCCO BRUCIATORE	INDICATOR LIGHT FOR BURNER LOCK-OUT
LBF	LAMPADA SEGNALAZIONE BASSA FIAMMA BRUCIATORE	BURNER IN LOW FLAME INDICATOR LIGHT
LBF1	LAMPADA SEGNALAZIONE BASSA FIAMMA BRUCIATORE	BURNER IN LOW FLAME INDICATOR LIGHT
LEVG1	LAMPADA SEGNALAZIONE APERTURA [EVG1]	INDICATOR LIGHT FOR OPENING OF ELECTRO-VALVE [EVG1]
LEVG2	LAMPADA SEGNALAZIONE APERTURA [EVG2]	INDICATOR LIGHT FOR OPENING OF ELECTRO-VALVE [EVG2]
LOA... / LMO...	APPARECCHIATURA CONTROLLO FIAMMA	CONTROL BOX
LTA	LAMPADA SEGNALAZIONE TRASFORMATORE DI ACCENSIONE	IGNITION TRANSFORMER INDICATOR LIGHT
MV	MOTORE VENTILATORE	FAN MOTOR
PS	PULSANTE SBLOCCO FIAMMA (ESCLUSO LOA24)	FLAME UNLOCK BUTTON (EXCEPT LOA24)
SQN72.2A4A20	SERVOCOMANDO SERRANDA ARIA (ALTERNATIVO)	AIR DAMPER ACTUATOR (ALTERNATIVE)
ST	SERIE TERMOSTATI/PRESSOSTATI	SERIES OF THERMOSTATS OR PRESSURE SWITCHES
STA4.5B0.37/63N30L	SERVOCOMANDO SERRANDA ARIA	AIR DAMPER ACTUATOR
TA	TRASFORMATORE DI ACCENSIONE	IGNITION TRANSFORMER
TAB	TERMOSTATO/PRESSOSTATO ALTA-BASSA FIAMMA	HIGH-LOW THERMOSTAT/PRESSURE SWITCHES
TS	TERMOSTATO/PRESSOSTATO DI SICUREZZA	SAFETY THERMOSTAT OR PRESSURE SWITCH

Data 08/01/2007		PREC. 1	FOGLIO 2
Revisione 05			
Dis. N. 18 – 0116		SEGUE /	TOTALE 2

VERSIONE MONOSTADIO "TN"
"TN" SINGLE-STAGE VERSION

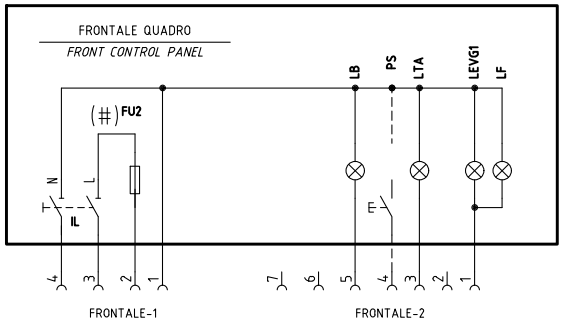

SIEMENS LOA24/LOA44 >> FR = QRB1xx
SIEMENS LMO24.xxx/LMO44.255 >> FR = QRB4

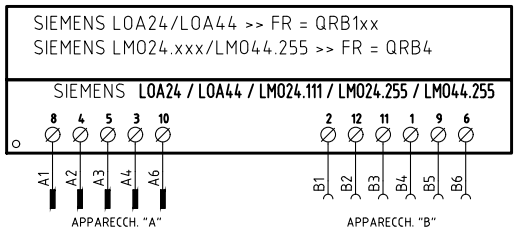

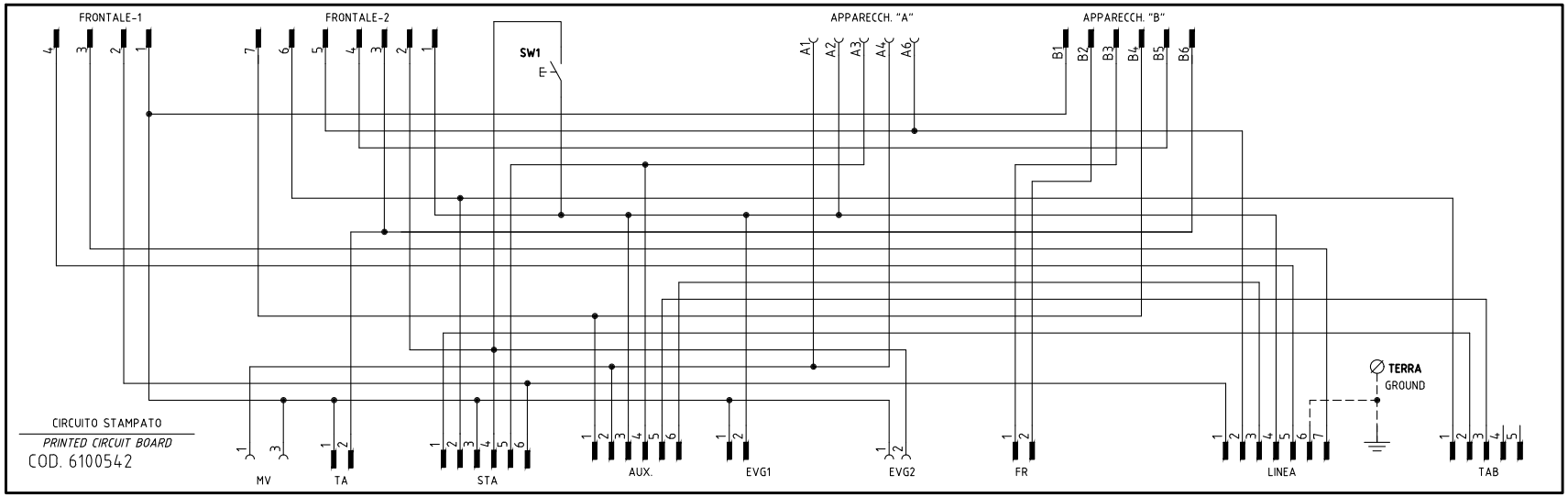

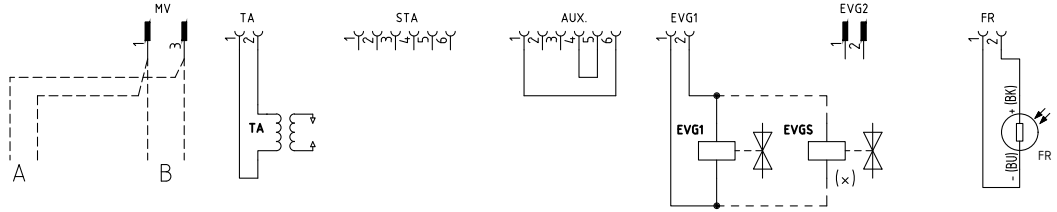

(×) EVGS = SOLO CON POTENZA > 400kW
EVGS = ONLY WITH OUTPUT > 400kW

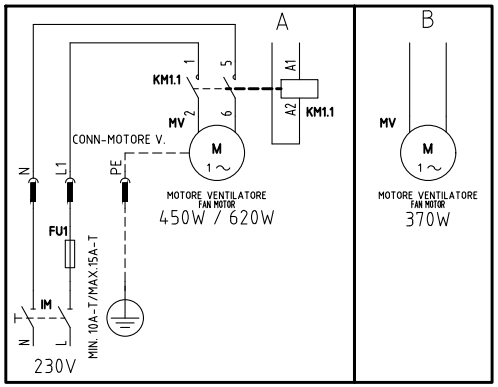

(#) MOTORE VENTIL. 450W O 620W, FU2 = 6,3A F; MOTORE VENTIL. 370W, FU2 = 10A F
FAN MOTOR 450W OR 620W, FU2 = 6,3A F; FAN MOTOR 370W FU2 = 10A F

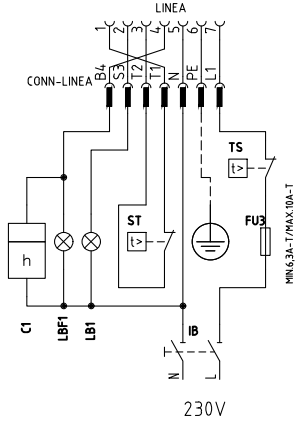

REV.	MODIFICA	DATA	FIRME
05	AGGIORNATO SCHEMA/WIRING UPDATE	14/03/19	U. PINTON
04	AGGIUNTO/ADDED LMO24.255	07/01/13	U. PINTON
03	AGGIUNTO/ADDED "SQN72..."	22/05/09	U. PINTON
02	CORRETTO/CORRECT "CONN. EVG2"	04/04/08	U. PINTON
06	"EVGS" ADDED (EN267:2020)	23/12/22	U. PINTON

UNIGAS

Impianto
TIPI/TYPES LO400 – LO550
MODELLO/MODEL G–.TN(AB). x.xx.A.x

Descrizione

Ordine

Commessa

Esecutore U. PINTON

Data Controllato 23/12/2022

Controllato M. MASCHIO

Data 13/10/2004

Revisione 06

Dis. N. 18 – 0049

PREC.	FOGLIO
/	1
SEGUE	TOTALE
2	3

VERSIONE ALTA-BASSA FIAMMA "AB"
"AB" HIGH/LOW FLAME VERSION

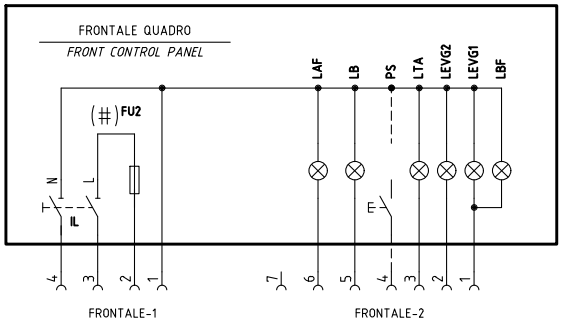

SIEMENS LOA24/LOA44 >> FR = QRB1xx
SIEMENS LMO24.xxx/LMO44.255 >> FR = QRB4

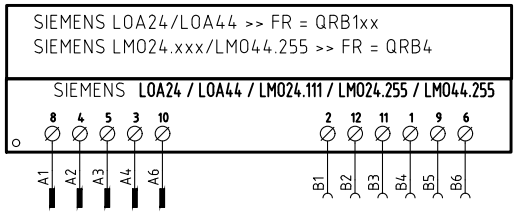

SERVOCOMANDO SERRANDA ARIA
AIR DAMPER ACTUATOR
STA4.5B0.37/63N30L

I	ALTA FIAMMA *HIGH FLAME*
II	SOSTA, ACCENSIONE, BASSA FIAMMA *STAND-BY, IGNITION, LOW FLAME*
III	APERTURA EVG2 *OPEN EVG2*

SERVOCOMANDO SERRANDA ARIA (ALTERNATIVO)
AIR DAMPER ACTUATOR (ALTERNATIVE)
SQN72.2A4A20

I (ROSSO) *I (RED)*	ALTA FIAMMA *HIGH FLAME*
II (BLU) *II (BLUE)*	SOSTA, ACCENSIONE, BASSA FIAMMA *STAND-BY, IGNITION, LOW FLAME*
IV (NERO) *IV (BLACK)*	APERTURA EVG2 *OPEN EVG2*

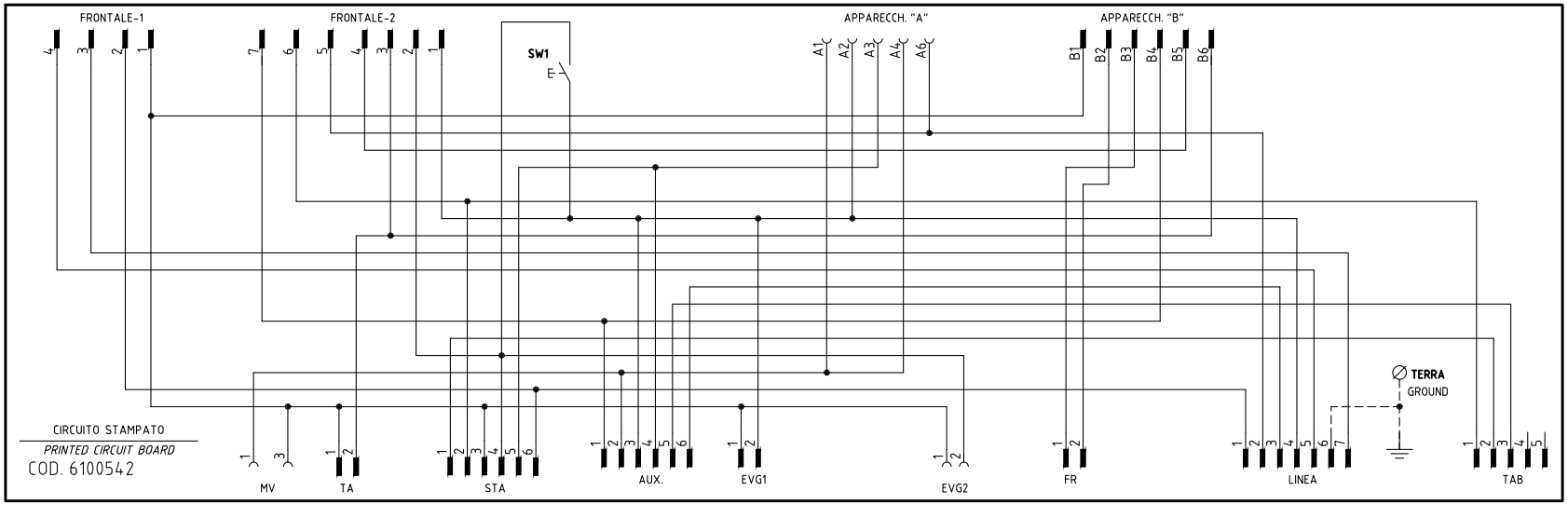

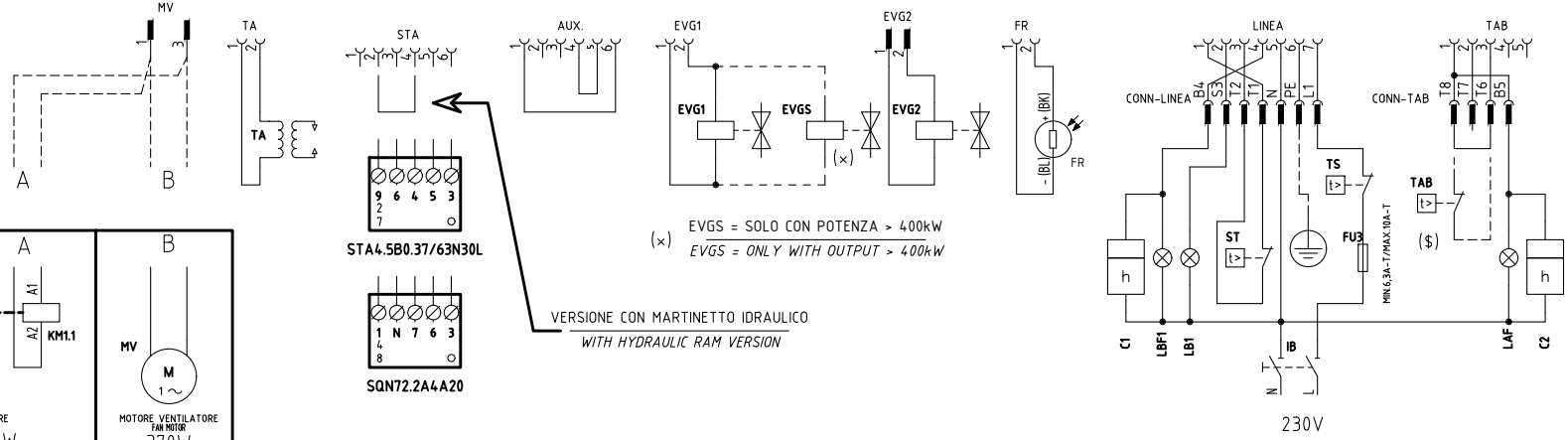

(×) EVGS = SOLO CON POTENZA > 400kW
EVGS = ONLY WITH OUTPUT > 400kW

STA4.5B0.37/63N30L
SQN72.2A4A20

VERSIONE CON MARTINETTO IDRAULICO
WITH HYDRAULIC RAM VERSION

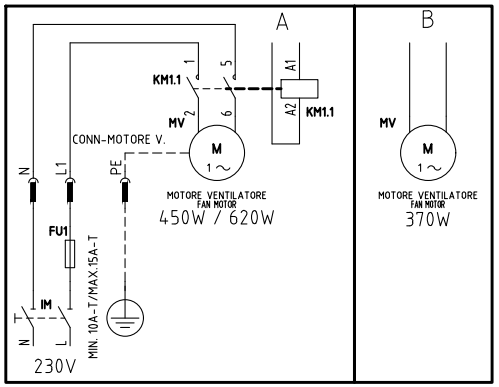

(#) MOTORE VENTIL. 450W O 620W, FU2 = 6,3A F; MOTORE VENTIL. 370W, FU2 = 10A F
FAN MOTOR 450W OR 620W, FU2 = 6,3A F; FAN MOTOR 370W FU2 = 10A F

($) SE USATO "TAB", TOGLIERE IL PONTE TRA I MORSETTI [T6-T8]
IF USED "TAB", REMOVE THE BRIDGE BETWEEN TERMINALS [T6-T8]

Data 13/10/2004		PREC. 1	FOGLIO 2
Revisione 06			
Dis. N. 18 – 0049		SEGUE 3	TOTALE 3

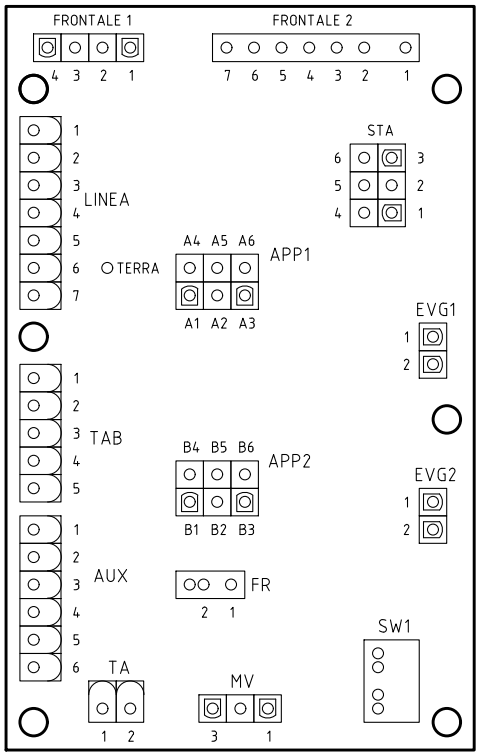

Sigla/Item	Funzione	Function
C1	CONTAORE BASSA FIAMMA	LOW FLAME TIME COUNTER
C2	CONTAORE ALTA FIAMMA	HIGH FLAME TIME COUNTER
EVG1	ELETTROVALVOLA GASOLIO BASSA FIAMMA	LOW FLAME LIGHT OIL SOLENOID VALVE
EVG2	ELETTROVALVOLA GASOLIO ALTA FIAMMA	HIGH FLAME LIGHT OIL SOLENOID VALVE
EVGS	ELETTROVALVOLA GASOLIO DI SICUREZZA	SAFETY LIGHT OIL SOLENOID VALVE
FR	SONDA RILEVAZIONE FIAMMA	FLAME DETECTOR PROBE
FU1	FUSIBILE LINEA MOTORE VENTILATORE	FAN MOTOR LINE FUSE
FU2	FUSIBILE DI LINEA	LINE FUSE
FU3	FUSIBILE LINEA BRUCIATORE	BURNER LINE FUSE
IB	INTERRUTTORE LINEA BRUCIATORE	BURNER LINE SWITCH
IL	INTERRUTTORE LINEA AUSILIARI	AUXILIARY LINE SWITCH
IM	INTERRUTTORE LINEA MOTORE VENTILATORE	FAN MOTOR LINE SWITCH
KM1.1	CONTATTORE MOTORE VENTILATORE	FAN MOTOR CONTACTOR
LAF	LAMPADA SEGNALAZIONE ALTA FIAMMA BRUCIATORE	BURNER IN HIGH FLAME INDICATOR LIGHT
LB	LAMPADA SEGNALAZIONE BLOCCO BRUCIATORE	INDICATOR LIGHT FOR BURNER LOCK-OUT
LB1	LAMPADA SEGNALAZIONE BLOCCO BRUCIATORE	INDICATOR LIGHT FOR BURNER LOCK-OUT
LBF	LAMPADA SEGNALAZIONE BASSA FIAMMA BRUCIATORE	BURNER IN LOW FLAME INDICATOR LIGHT
LBF1	LAMPADA SEGNALAZIONE BASSA FIAMMA BRUCIATORE	BURNER IN LOW FLAME INDICATOR LIGHT
LEVG1	LAMPADA SEGNALAZIONE APERTURA [EVG1]	INDICATOR LIGHT FOR OPENING OF ELECTRO-VALVE [EVG1]
LEVG2	LAMPADA SEGNALAZIONE APERTURA [EVG2]	INDICATOR LIGHT FOR OPENING OF ELECTRO-VALVE [EVG2]
LF	LAMPADA SEGNALAZIONE FUNZIONAMENTO BRUCIATORE	INDICATOR LIGHT BURNER OPERATION
LOA... / LMO...	APPARECCHIATURA CONTROLLO FIAMMA	CONTROL BOX
LTA	LAMPADA SEGNALAZIONE TRASFORMATORE DI ACCENSIONE	IGNITION TRANSFORMER INDICATOR LIGHT
MV	MOTORE VENTILATORE	FAN MOTOR
PS	PULSANTE SBLOCCO FIAMMA (SOLO CON LOA44 E LMO..)	LOCK-OUT RESET BUTTON (WITH LOA44 AND LMO.. ONLY)
SQN72.2A4A20	SERVOCOMANDO SERRANDA ARIA (ALTERNATIVO)	AIR DAMPER ACTUATOR (ALTERNATIVE)
ST	SERIE TERMOSTATI/PRESSOSTATI	SERIES OF THERMOSTATS OR PRESSURE SWITCHES
STA4.5B0.37/63N30L	SERVOCOMANDO SERRANDA ARIA	AIR DAMPER ACTUATOR
SW1	PULSANTE INNESCO SECONDO STADIO BRUCIATORE	II° STAGE BURNER START BUTTON
TA	TRASFORMATORE DI ACCENSIONE	IGNITION TRANSFORMER
TAB	TERMOSTATO/PRESSOSTATO ALTA-BASSA FIAMMA	HIGH-LOW THERMOSTAT/PRESSURE SWITCHES
TS	TERMOSTATO/PRESSOSTATO DI SICUREZZA	SAFETY THERMOSTAT OR PRESSURE SWITCH

Data 13/10/2004		PREC. 2	FOGLIO 3
Revisione 06			
Dis. N. 18 – 0049		SEGUE /	TOTALE 3

APPENDIX

SIEMENS OIL BURNERS AUTOMATIC CONTROLLER LOA24

Use

LOA... safety devices are intended for use solely with QRB... photoresistors, for lighting and controlling low capacity forced air light oil burners with max. capacity 30 kg/h in accordance with standard DIN 4787.

The One or two flamess are lit through electrical connections with or without post-ignition.

To replace LAI... AND LAB.. WITH LOA...

LOA... models can be used as replacement for LAI... and LAB.. controllers by means of the adapter KF8819 and without the need to change the electrical wiring. Because the LOA is smaller in dimensions, when it is used with the adapter the external dimensions are almost identical, which means that there is no need to move the reset button.

Performance

The controllers just need plugging in, so they can be mounted in almost any position: on the burner, on the electrical panel or on the control panel. The casing is made of robust heat-resistant plastic and contains:

- the thermic programmer operating a multiple switch control system with ambient temperature compensator
- flame signal amplifier with flame relay
- warning light indicating lockout and associated sealed reset button.

The plug-in socket, also made of robust heat-resistant plastic, contains the 12 terminals and also:

- 3 neutral terminals, ready wired up to terminal 2
- 4 earth terminals for earthing the burner
- 2 supplementary terminals numbered “31” and “32”.

The socket has two openings at the bottom for the leads; 5 others with threaded connection for cable holders PG11 or 3/4UNP for non-metallic sleeves are located on a mobile stuffing box, one on either side and 3 on the front.

There are two flexible metal tongues on the sides of the socket for mounting.

To dismantle it only requires gentle pressure with a screw driver in the slot of the mounting guide. The base dimensions of the socket are exaclty the same as for types LAB/LAI and there is no difference in the diameter of the reset button, the two mounting screws and the flange of the burner earth.

Safety at low voltage levels

Safety devices against any reduction in the mains voltage operate on a special electronic circuit which, in the event of the power supply falling below 165V~, stops the burner switching on without releasing the fuel and locks out the apparatus.

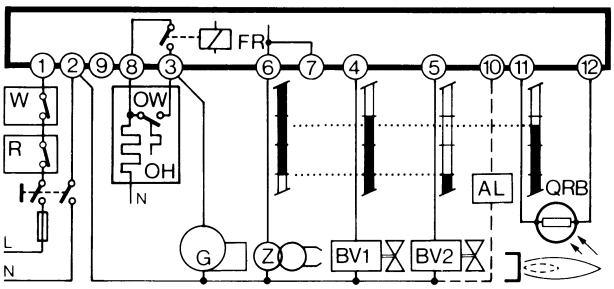

Wiring diagram of the programme

To ensure correct wiring it is essential to observe local standards and follow the instructions of the burner manufacturer with regard to assembly and start-up.

Program's legend:

Controller output signals
Required input signals

A’Burner start up with light oil pre-heater OH

A Burner start-up without light oil pre-heater
B Flame lit
C Normal operation
D Normal stop through R
tw Oil pre-heating time until operational all clear given through contact OW
tl Pre-purge time
t3 Pre-ignition time
t2 Safety time
t3n Post-ignition time
t4 Interval between the flame lighting and energising of solenoid 2a at terminal 5

Internal layout

AL Optical alarm
BV. Fuel valve
EK Reset button
FR Flame relay
fr Flame relay contacts
FS Flame alight signal
G Burner motor
K Flame relay anchor to delay the tzl command in the event of a premature flame signal or endorse it where the signal is correct.
OH light oil pre-heater
OW Operational all-clear contact
QRB Photo-resistant cell (flame detector)
R Thermostat or pressure switch
TZ Thermo-electric programmer (bimetal system)
tz.. TZ contacts
V Flame signal amplifier
W Safety thermostat or pressure switch
Z Ignition transformer

The above are safety devices!

To tamper with them in any way may have unforeseeable consequences!

Do not open them!

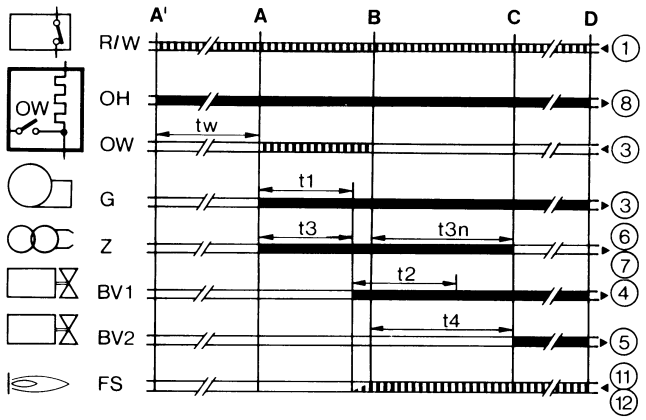

Technical characteristics

Voltage	220V -15%..240V+10% or 100V -15%...110V+10%
Frequency	50...60Hz +/- 6%
External fuse	max.10A slow action
Contact flow:	
- terminal 1	5A
- terminal 3	5A (incl.capacity absorbed by motor and pre-heater)
Terminal flow:	
terminals 4, 5 &10	1A
terminals 6&7	2A
terminal 8	5A
Absorbed cap	3VA
Protection	IP40
Premitted temp:	
operational	-20...+60°C
transport & storage	-50...+60°C

Emplacement	any
Mass (weight)	controller 180g, socket 50g, AGK accessories 12 g.

Commands in the event of operational interference

Stray light/premature ignition

During pre-purge and/or pre-ignition there should be no flamesignal. If there is a flame signal, eg from premature ignition due to a faulty solenoid, external light, short circuit in the photoresisto or wiring, malfunction in the flame signal amplifier, etc., at the end of pre-purge and safety time the controller locks out the burner and stops the fuel flow even during safety time.

Absence of flame

If there is no flame at the end of safety time the controller locks out immediately.

Absence of flame during operation

If there is no flame during operation the controller cuts off the supply of fuel and automatically initiates a fresh start-up programme: at the end of t4 the start-up programme ends.

Whenever there is a safety stop, terminals 3-8 and 11 are de-energised in less than 1 second; at the same time a remote lockout signal is transmitted through terminal 10. The controller can be reset after c. 50 seconds.

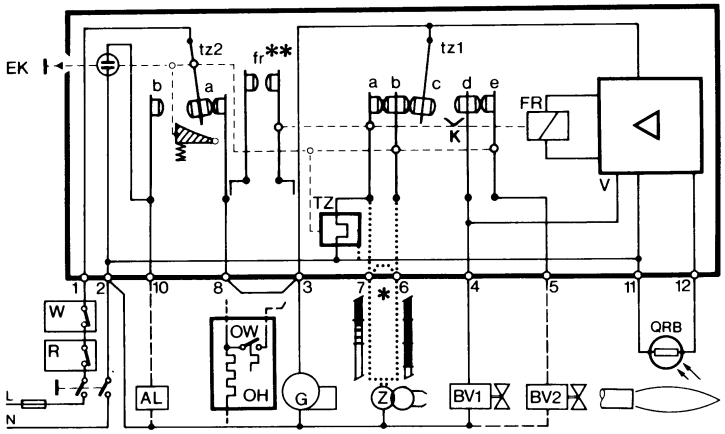

SIEMENS OIL BURNERS AUTOMATIC CONTROLLER SIEMENS LMO14 - LMO24 - LMO44

The LMO... burner controls are designed for the start-up and supervision of single- or 2-stage forced draught oil burners in intermittent operation. Yellow-burning flames are supervised with photoresistive detectors QRB..., blue-burning flames with blue-flame detectors QRC...

In terms of housing dimensions, electrical connections and flame detectors, the LMO... are identical to the LOA... oil burner controls.

Preconditions for startup

- Burner control is reset
- All contacts in the line are closed
- No undervoltage
- Flame detector is darkened, no extraneous light

Undervoltage

- Safety shut-down in the operating position takes place should the mains voltage drop below about AC 165 V
- Restart is initiated when the mains voltage exceeds about AC 175 V

Time supervision oil pre-heater

If the oil pre-heater's release contact does not close within 10 minutes, the burner control will initiate lock-out.

Controlled intermittent operation

After no more than 24 hours of continuous operation, the burner control will initiate an automatic safety shut-down followed by a restart.

Control sequence in the event of fault

If lock-out occurs, the outputs for the fuel valves and the ignition will immediately be deactivated (< 1 second).

Cause	Response
After a mains failure	Restart
After voltage has fallen below the undervoltage threshold	Restart
In the event of a premature, faulty flame signal during «t1»	Lock-out at the end of «t1»
In the event of a premature, faulty flame signal during «tw»	Prevention of start-up, lock-out after no more than 40 seconds
If the burner does not ignite during «TSA»	Lock-out at the end of TSA
In the event the flame is lost during operation	Max. 3 repetitions, followed by lock-out
Oil pre-heater's release contact does not close within 10 min.	Lock-out

Lock-out

In the event of lock-out, the LMO... remains locked (lock-out cannot be changed), and the red signal lamp will light up. This status is also maintained in the case of a mains failure.

Resetting the burner

Whenever lock-out occurs, the burner control can immediately be reset. To do this, keep control the lock-out reset button depressed for about 1 second (< 3 seconds).

Ignition program with LMO24.113A2

If the flame is lost during «TSA», the burner will be reignited, but not later than at the end of «TSAmax.». This means that several ignition attempts can be made during TSA (refer to «Program sequence»).

Limitation of repetitions

If the flame is lost during operation, a maximum of 3 repetitions can be made. If the flame is lost for the 4th time during operation, the burner will initiate lock-out. The repetition count is restarted each time controlled switching on by «R-W-SB» takes place.

Operation

Lock-out reset button «EK...» is the key operating element for resetting the burner control and for activating / deactivating the diagnostic functions.

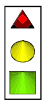

The multicolour «LED» is the key indicating element for both visual diagnosis and interface diagnosis.

s Red
l Yellow
o Green

Colour code table		
Status	Colour code	Colour
Oil pre-heater heats, waiting time «tw»	lllllllllll	Yellow
Ignition phase, ignition controlled	lmlmlmlmlml	Yellow-off
Operation, flame o.k.	ooooooooooo	Green
Operation, flame not o.k.	omomomomomo	Green-off
Undervoltage	lslslslslsl	Yellow-red
Fault, alarm	sssssssssss	Red
Output of fault code (refer to Fault code table)	smsmsmsmsm	Red-off
Extraneous light prior to burner start-up	osososososo	Green-red
Interface diagnosis	ssssssssssssss	Red flicker light

Key

m Off
l Yellow
o Green
s Red

Diagnosis of cause of fault

After lock-out, the red fault signal lamp remains steady on.

In that condition, the visual diagnosis of the cause of fault according to the error code table can be activated by pressing the lock-out reset button for more than 3 seconds.

Error code table	
Blink code	**Possible cause**
2 blinks **	No establishment of flame at the end of TSA ● Faulty or soiled fuel valves ● Faulty or soiled flame detector ● Poor adjustment of burner, no fuel ● Faulty ignition
3 blinks ***	Free
4 blinks ****	Extraneous light on burner startup
5 blinks *****	Free
6 blinks ******	Free
7 blinks *******	Too manny losses of fleme during operation (limitattion og the number of repetitions) ● Faulty or soiled fuel valves ● Faulty or soiled flame detector ● Poor adjustment of burner
8 blinks ********	Time supervision oil pre-heater
9 blinks *********	Free
10 blinks **********	Wiring error or internal error, output contacts

During the time the cause of fault is diagnosed, the control outputs are deactivated.

- Burner remains shut down
- Fault status signal «AL» at terminal 10 is activated

The diagnosis of the cause of fault is quit and the burner switched on again by resetting the burner control.

Press lock-out reset button for about 1 second (< 3 seconds).

Connection diagram and internal diagram

LMO14

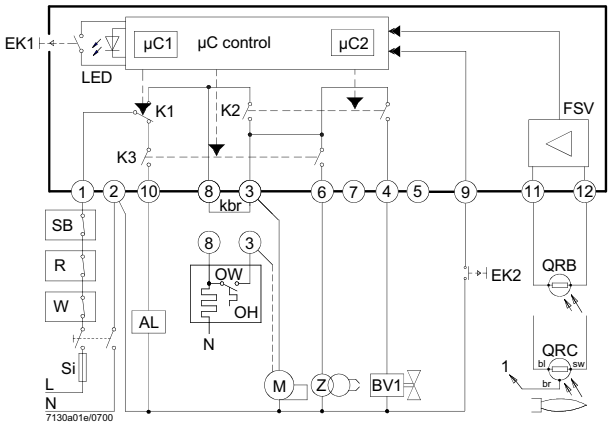

LMO24 - LMO44

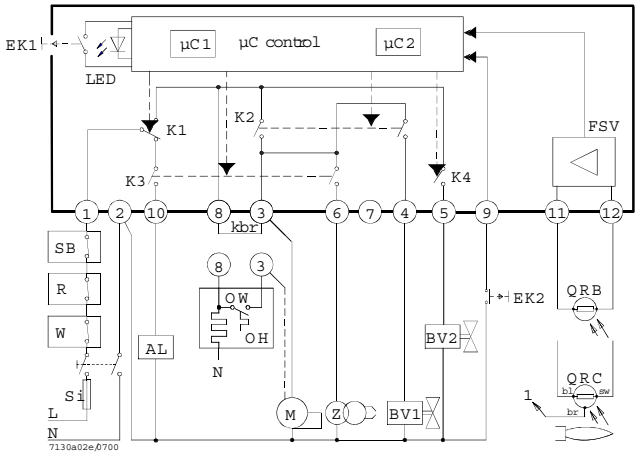

Control sequence

LMO14

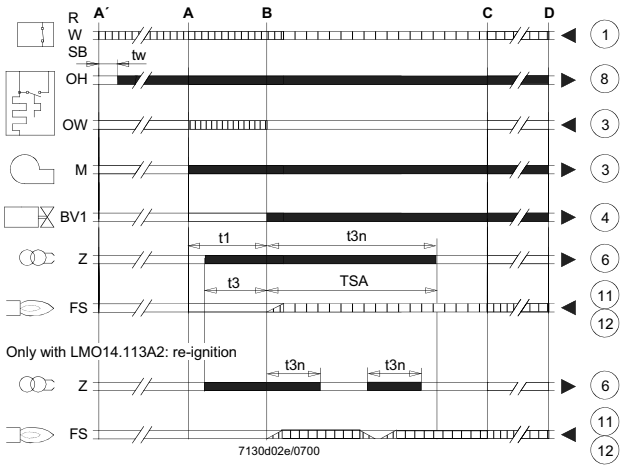

LMO24 - LMO44

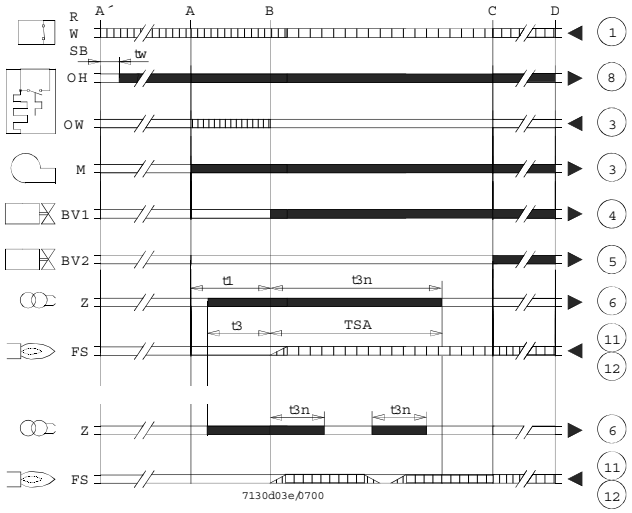

Key

AL	Alarm device
kbr...	Cable link (required only when no oil pre-heater is used)
BV...	Fuel valve
EK1	Lock-out reset button
EK2	Remote lock-out reset button
FS	Flame signal
FSV	Flame signal amplifier
K...	Contacts of control relay
LED	3-colour signal lamps
M	Burner motor
OW	Release contact of oil pre-heater
t1	Pre-purge time
t3	Pre-ignition time
t3n	Post-ignition time
A´	Beginning of start-up sequence with burners using an oil pre-heater
A	Beginning of start-up sequence with burners using no oil pre-heater
	Controller output signals
	Required input signals
OH	Oil pre-heater
QRB	Photoresistive detector
QRC	Blue-flame detector
bl = blue	
br = brown	
sw = black	
R	Control thermostat or pressurestat
SB	Safety limit thermostat
Si	External primary fuse
W	Limit thermostat or pressure switch
Z	Ignition transformer
t4	Interval from flame signal to release «BV2»
TSA	Ignition safety time
tw	Waiting time for oil pre-heating
B	Time of flame establishment
C	Operating position
D	Controlled shut-down by «R»
µC1	Microcontroller 1
µC2	Microcontroller 2

General unit data

Mains voltage	AC 230 V +10 % / -15 % AC 120 V +10 % / -15 %
Mains frequency	50...60 Hz ±6 %
External primary fuse (Si)	6.3A (slow)
Power consumption	12 VA
Mounting orientation	optional
Weight	approx. 200 g
Degree of protection	IP40 (to be ensured through mounting)
Perm. cable lengths	max. 3m at line capacitance of 100 pF/m
Detector cable laid separately	10 m
Remote reset laid separately	20m

	LMO14	LMO24	LMO44
Terminal 1	5 A	5 A	5 A
Terminals 3 and 8	3 A	5 A	5 A
Terminals 4, 5 and 10	1 A	1 A	1A
Terminals 6	1 A	1 A	2A

Flame supervision with QRB and QRC

	QRB	QRC
Min. detector current required (with flame)	45 µA	70 µA
Min detector current permitted (without flame)	5.5 µA	5.5 µA
Max. possible with flame (tipically)	100 µA	100 µA

Measurement circuit for detector current

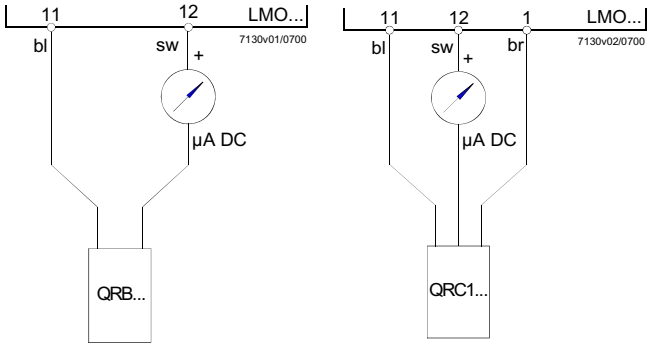

Key

µA DC	DC microamperometer with an internal resistance of 5 kΩ max.
bl	Blue
sw	Black
br	Brown

C.I.B. UNIGAS S.p.A.
Via L.Galvani, 9 - 35011 Campodarsego (PD) - ITALY
Tel. +39 049 9200944 - Fax +39 049 9200945/9201269
web site: www.cibunigas.it - e-mail: cibunigas@cibunigas.it

Note: Specifications and and data subject to change. Errors and omissions excepted.

VERSIONE MONOSTADIO "TN"
"TN" SINGLE-STAGE VERSION

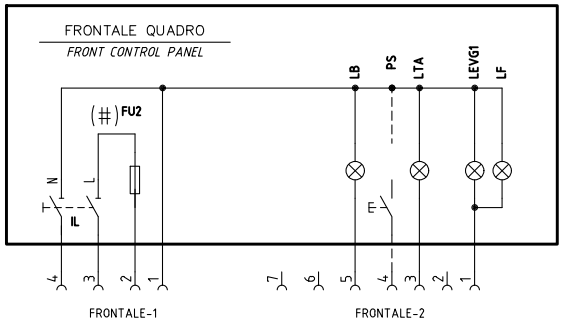

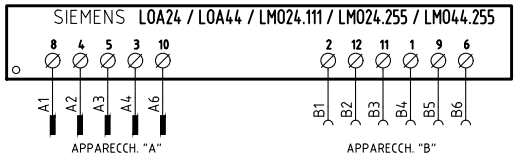

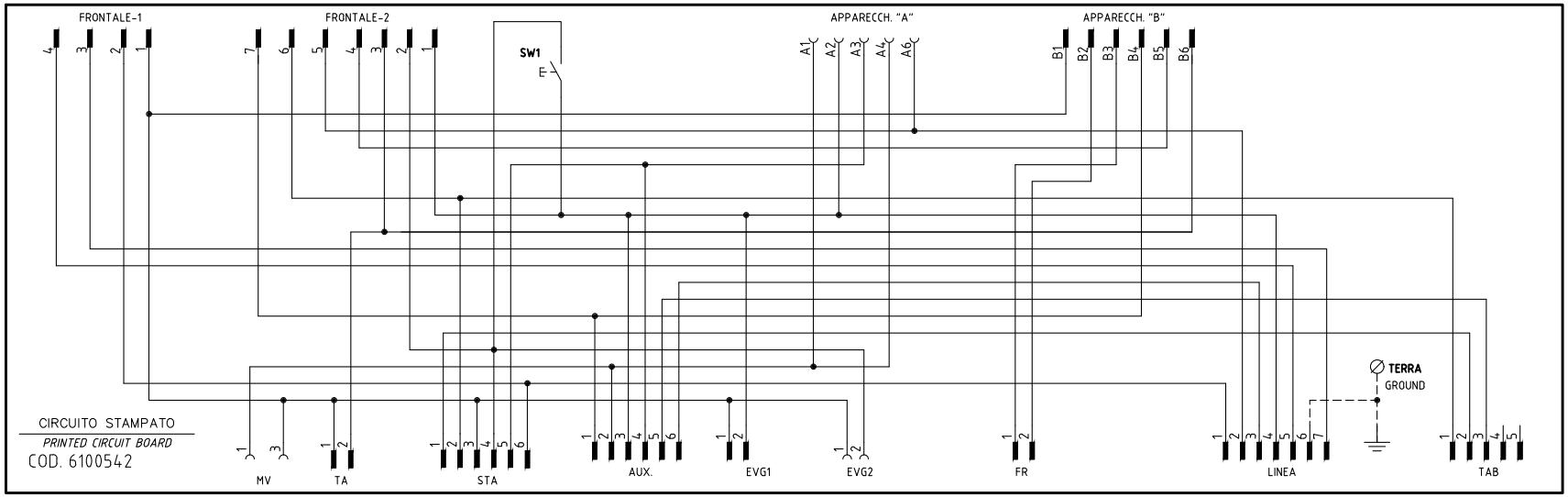

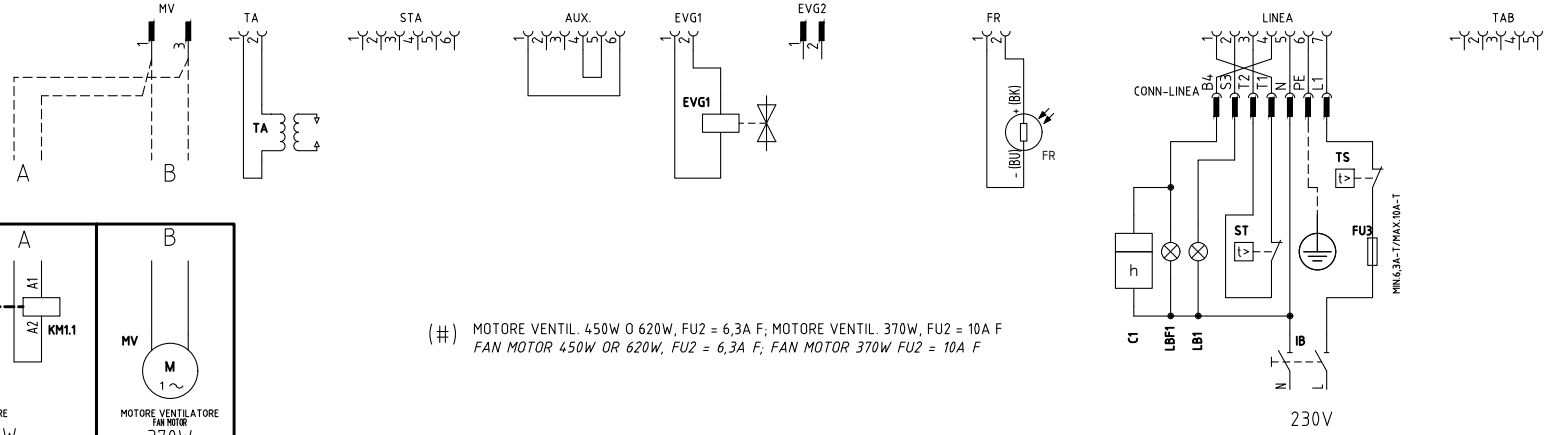

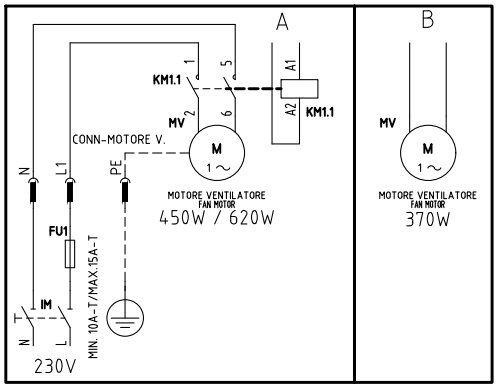

(#) MOTORE VENTIL. 450W O 620W, FU2 = 6,3A F; MOTORE VENTIL. 370W, FU2 = 10A F
FAN MOTOR 450W OR 620W, FU2 = 6,3A F; FAN MOTOR 370W FU2 = 10A F

REV.	MODIFICA	DATA	FIRME
04	AGGIUNTO/ADDED LMO24.255	07/01/13	U. PINTON
03	AGGIUNTO/ADDED "SQN72..."	22/05/09	U. PINTON
02	CORRETTO/CORRECT "CONN. EVG2"	04/04/08	U. PINTON
01	AGGIUNTO/ADDED LO550	19/09/07	U. PINTON

UNIGAS

Impianto
TIPI/TYPES LO400 – LO550
MODELLO/MODEL G–.TN(AB). x.xx.A.x

Descrizione

Ordine

Commessa

Esecutore U. PINTON

Data Controllato 07/01/2013

Controllato S. MARCHETTI

Data 13/10/2004

Revisione 04

Dis. N. 18 – 0049

PREC. /

FOGLIO 1

SEGUE 2

TOTALE 3

VERSIONE ALTA-BASSA FIAMMA "AB"
"AB" HIGH/LOW FLAME VERSION

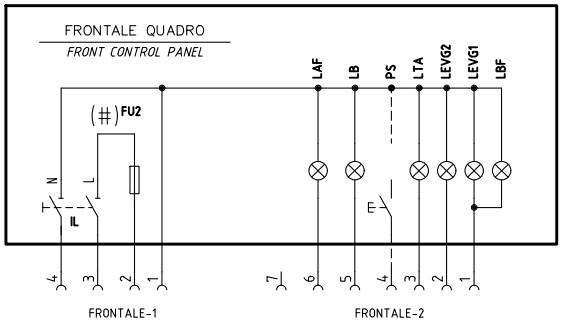

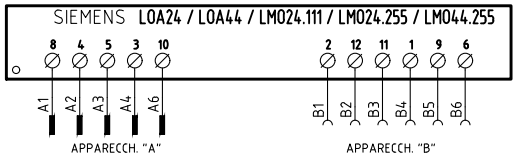

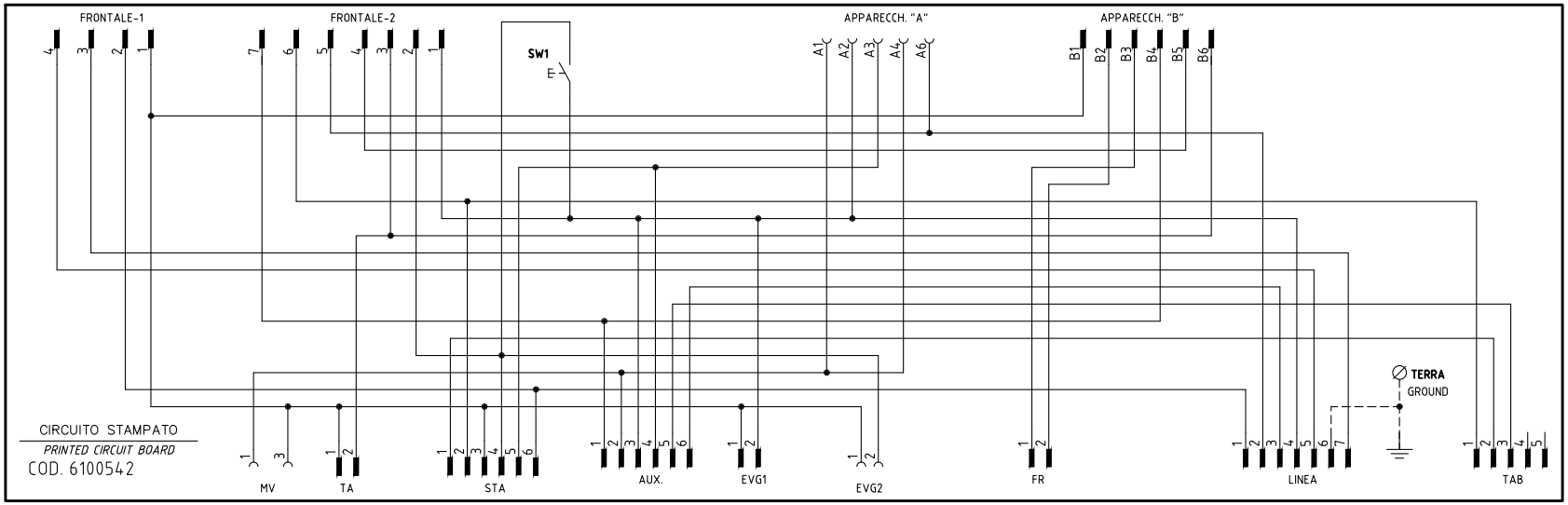

SERVOCOMANDO SERRANDA ARIA
AIR DAMPER ACTUATOR
STA4.5B0.37/63N30L

I	ALTA FIAMMA *HIGH FLAME*
II	SOSTA, ACCENSIONE, BASSA FIAMMA *STAND-BY, IGNITION, LOW FLAME*
III	APERTURA EVG2 *OPEN EVG2*

SERVOCOMANDO SERRANDA ARIA (ALTERNATIVO)
AIR DAMPER ACTUATOR (ALTERNATIVE)
SQN72.2A4A20

I (ROSSO) *I (RED)*	ALTA FIAMMA *HIGH FLAME*
II (BLU) *II (BLUE)*	SOSTA, ACCENSIONE, BASSA FIAMMA *STAND-BY, IGNITION, LOW FLAME*
IV (NERO) *IV (BLACK)*	APERTURA EVG2 *OPEN EVG2*

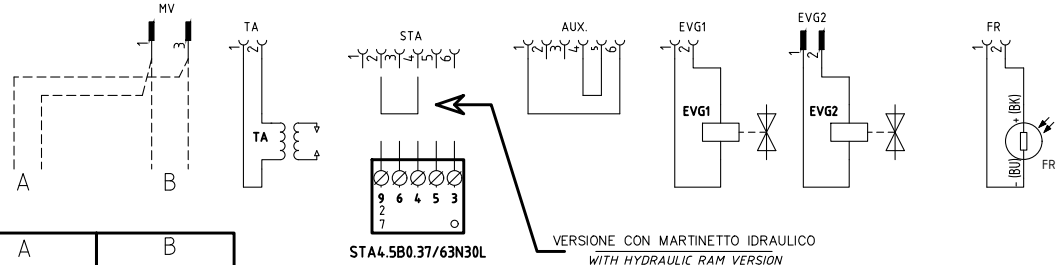

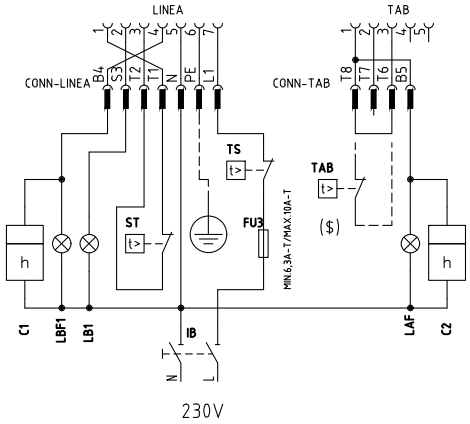

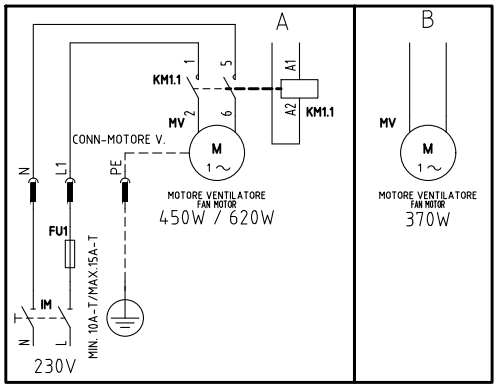

(#) MOTORE VENTIL. 450W O 620W, FU2 = 6,3A F; MOTORE VENTIL. 370W, FU2 = 10A F
FAN MOTOR 450W OR 620W, FU2 = 6,3A F; FAN MOTOR 370W FU2 = 10A F

($) SE PREVISTO "TAB", TOGLIERE IL PONTE TRA I MORSETTI T6-T8
IF "TAB" USED REMOVE THE BRIDGE BETWEEN TERMINALS T6-T8

Data 13/10/2004		PREC. 1	FOGLIO 2
Revisione 04			
Dis. N. 18 – 0049		SEGUE 3	TOTALE 3

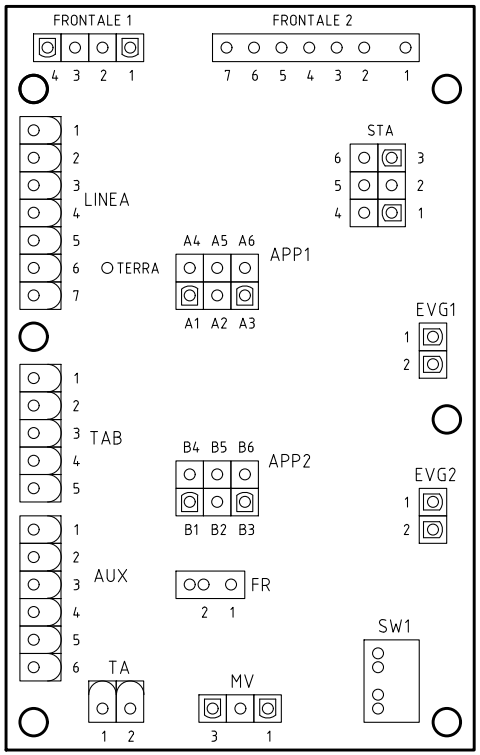

SIGLA/ITEM	Funzione	FUNCTION
C1	CONTAORE BASSA FIAMMA	LOW FLAME TIME COUNTER
C2	CONTAORE ALTA FIAMMA	HIGH FLAME TIME COUNTER
EVG1	ELETTROVALVOLA GASOLIO BASSA FIAMMA	LOW FLAME LIGHT OIL SOLENOID VALVE
EVG2	ELETTROVALVOLA GASOLIO ALTA FIAMMA	HIGH FLAME LIGHT OIL SOLENOID VALVE
FR	FOTORESISTENZA RILEVAZIONE FIAMMA	PHOTORESISTOR FLAME DETECTOR
FU1	FUSIBILE LINEA MOTORE VENTILATORE	FAN MOTOR LINE FUSE
FU2	FUSIBILE DI LINEA	LINE FUSE
FU3	FUSIBILE LINEA BRUCIATORE	BURNER LINE FUSE
IB	INTERRUTTORE LINEA BRUCIATORE	BURNER LINE SWITCH
IL	INTERRUTTORE LINEA AUSILIARI	AUXILIARY LINE SWITCH
IM	INTERRUTTORE LINEA MOTORE VENTILATORE	FAN MOTOR LINE SWITCH
KM1.1	CONTATTORE MOTORE VENTILATORE	FAN MOTOR CONTACTOR
LAF	LAMPADA SEGNALAZIONE ALTA FIAMMA BRUCIATORE	BURNER IN HIGH FLAME INDICATOR LIGHT
LB	LAMPADA SEGNALAZIONE BLOCCO BRUCIATORE	INDICATOR LIGHT FOR BURNER LOCK-OUT
LB1	LAMPADA SEGNALAZIONE BLOCCO BRUCIATORE	INDICATOR LIGHT FOR BURNER LOCK-OUT
LBF	LAMPADA SEGNALAZIONE BASSA FIAMMA BRUCIATORE	BURNER IN LOW FLAME INDICATOR LIGHT
LBF1	LAMPADA SEGNALAZIONE BASSA FIAMMA BRUCIATORE	BURNER IN LOW FLAME INDICATOR LIGHT
LEVG1	LAMPADA SEGNALAZIONE APERTURA [EVG1]	INDICATOR LIGHT FOR OPENING OF ELECTRO-VALVE [EVG1]
LEVG2	LAMPADA SEGNALAZIONE APERTURA [EVG2]	INDICATOR LIGHT FOR OPENING OF ELECTRO-VALVE [EVG2]
LF	LAMPADA SEGNALAZIONE FUNZIONAMENTO BRUCIATORE	INDICATOR LIGHT BURNER OPERATION
LOA.. / LMO..	APPARECCHIATURA CONTROLLO FIAMMA	CONTROL BOX
LTA	LAMPADA SEGNALAZIONE TRASFORMATORE DI ACCENSIONE	IGNITION TRANSFORMER INDICATOR LIGHT
MV	MOTORE VENTILATORE	FAN MOTOR
PS	PULSANTE SBLOCCO FIAMMA (SOLO CON LOA44 E LMO..)	LOCK-OUT RESET BUTTON (WITH LOA44 AND LMO.. ONLY)
SQN72.2A4A20	SERVOCOMANDO SERRANDA ARIA (ALTERNATIVO)	AIR DAMPER ACTUATOR (ALTERNATIVE)
ST	SERIE TERMOSTATI/PRESSOSTATI	SERIES OF THERMOSTATS OR PRESSURE SWITCHES
STA4.5B0.37/63N30L	SERVOCOMANDO SERRANDA ARIA	AIR DAMPER ACTUATOR
SW1	PULSANTE INNESCO SECONDO STADIO BRUCIATORE	II° STAGE BURNER START BUTTON
TA	TRASFORMATORE DI ACCENSIONE	IGNITION TRANSFORMER
TAB	TERMOSTATO/PRESSOSTATO ALTA-BASSA FIAMMA	HIGH-LOW THERMOSTAT/PRESSURE SWITCHES
TS	TERMOSTATO/PRESSOSTATO DI SICUREZZA	SAFETY THERMOSTAT OR PRESSURE SWITCH

Data 13/10/2004		PREC. 2	FOGLIO 3
Revisione 04			
Dis. N. 18 – 0049		SEGUE /	TOTALE 3