# PBY90 - PBY91
# PBY92 - PBY93
# PBY510 - PBY515
# PBY520 - PBY525

## Progressive, Fully-modulating Heavy oil Burners with pneumatic atomization (LMV2x/3x micro-processor control)

MANUAL OF INSTALLATION - USE - MAINTENANCE

CIB UNIGAS

BURNERS - BRUCIATORI - BRULERS - BRENNER - QUEMADORES - ГОРЕЛКИ

M039397CA Rel. 1.0 04/2020

## DANGERS, WARNINGS AND NOTES OF CAUTION

**THIS MANUAL IS SUPPLIED AS AN INTEGRAL AND ESSENTIAL PART OF THE PRODUCT AND MUST BE DELIVERED TO THE USER.**

**INFORMATION INCLUDED IN THIS SECTION ARE DEDICATED BOTH TO THE USER AND TO PERSONNEL FOLLOWING PRODUCT INSTALLATION AND MAINTENANCE.**

**THE USER WILL FIND FURTHER INFORMATION ABOUT OPERATING AND USE RESTRICTIONS, IN THE SECOND SECTION OF THIS MANUAL. WE HIGHLY RECOMMEND TO READ IT.**

**CAREFULLY KEEP THIS MANUAL FOR FUTURE REFERENCE.**

### 1) GENERAL INTRODUCTION

- The equipment must be installed in compliance with the regulations in force, following the manufacturer's instructions, by qualified personnel.
- Qualified personnel means those having technical knowledge in the field of components for civil or industrial heating systems, sanitary hot water generation and particularly service centres authorised by the manufacturer.
- Improper installation may cause injury to people and animals, or damage to property, for which the manufacturer cannot be held liable.
- Remove all packaging material and inspect the equipment for integrity.

In case of any doubt, do not use the unit - contact the supplier.

The packaging materials (wooden crate, nails, fastening devices, plastic bags, foamed polystyrene, etc), should not be left within the reach of children, as they may prove harmful.

- Before any cleaning or servicing operation, disconnect the unit from the mains by turning the master switch OFF, and/or through the cut-out devices that are provided.
- Make sure that inlet or exhaust grilles are unobstructed.
- In case of breakdown and/or defective unit operation, disconnect the unit. Make no attempt to repair the unit or take any direct action.

Contact qualified personnel only.

Units shall be repaired exclusively by a servicing centre, duly authorised by the manufacturer, with original spare parts.

Failure to comply with the above instructions is likely to impair the unit's safety.

To ensure equipment efficiency and proper operation, it is essential that maintenance operations are performed by qualified personnel at regular intervals, following the manufacturer's instructions.

- When a decision is made to discontinue the use of the equipment, those parts likely to constitute sources of danger shall be made harmless.
- In case the equipment is to be sold or transferred to another user, or in case the original user should move and leave the unit behind, make sure that these instructions accompany the equipment at all times so that they can be consulted by the new owner and/or the installer.
- For all the units that have been modified or have options fitted then original accessory equipment only shall be used.
- This unit shall be employed exclusively for the use for which it is meant. Any other use shall be considered as improper and, therefore, dangerous.

The manufacturer shall not be held liable, by agreement or otherwise, for damages resulting from improper installation, use and failure to comply with the instructions supplied by the manufacturer.The occurrence of any of the following circustances may cause explosions, polluting unburnt gases (example: carbon monoxide CO), burns, serious harm to people, animals and things:

- Failure to comply with one of the WARNINGS in this chapter
- Incorrect handling, installation, adjustment or maintenance of the burner
- Incorrect use of the burner or incorrect use of its parts or optional supply

### 2) SPECIAL INSTRUCTIONS FOR BURNERS

- The burner should be installed in a suitable room, with ventilation openings complying with the requirements of the regulations in force, and sufficient for good combustion.
- Only burners designed according to the regulations in force should be used.
- This burner should be employed exclusively for the use for which it was designed.
- Before connecting the burner, make sure that the unit rating is the same as delivery mains (electricity, gas oil, or other fuel).
- Observe caution with hot burner components. These are, usually, near to the flame and the fuel pre-heating system, they become hot during the unit operation and will remain hot for some time after the burner has stopped.

When the decision is made to discontinue the use of the burner, the user shall have qualified personnel carry out the following operations:

a Remove the power supply by disconnecting the power cord from the mains.

b) Disconnect the fuel supply by means of the hand-operated shut-off valve and remove the control handwheels from their spindles.

**Special warnings**

- Make sure that the burner has, on installation, been firmly secured to the appliance, so that the flame is generated inside the appliance firebox.
- Before the burner is started and, thereafter, at least once a year, have qualified personnel perform the following operations:

a set the burner fuel flow rate depending on the heat input of the appliance;

b set the flow rate of the combustion-supporting air to obtain a combustion efficiency level at least equal to the lower level required by the regulations in force;

c check the unit operation for proper combustion, to avoid any harmful or polluting unburnt gases in excess of the limits permitted by the regulations in force;

d make sure that control and safety devices are operating properly;

e make sure that exhaust ducts intended to discharge the products of combustion are operating properly;

f on completion of setting and adjustment operations, make sure that all mechanical locking devices of controls have been duly tightened;

g make sure that a copy of the burner use and maintenance instructions is available in the boiler room.

- In case of a burner shut-down, reser the control box by means of the RESET pushbutton. If a second shut-down takes place, call the Technical Service, **without trying to RESET further**.
- The unit shall be operated and serviced by qualified personnel only, in compliance with the regulations in force.

### 3) GENERAL INSTRUCTIONS DEPENDING ON FUEL USED

### 3a) ELECTRICAL CONNECTION

- For safety reasons the unit must be efficiently earthed and installed as required by current safety regulations.
- It is vital that all saftey requirements are met. In case of any doubt, ask for an accurate inspection of electrics by qualified personnel, since the manufacturer cannot be held liable for damages that may be caused by failure to correctly earth the equipment.
- Qualified personnel must inspect the system to make sure that it is adequate to take the maximum power used by the equipment shown on the equipment rating plate. In particular, make sure that the system cable cross section is adequate for the power absorbed by the unit.
- No adaptors, multiple outlet sockets and/or extension cables are permitted to connect the unit to the electric mains.
- An omnipolar switch shall be provided for connection to mains, as required by the current safety regulations.
- The use of any power-operated component implies observance of a few basic rules, for example:
  - do not touch the unit with wet or damp parts of the body and/or with

bare feet;

- do not pull electric cables;
- do not leave the equipment exposed to weather (rain, sun, etc.) unless expressly required to do so;
- do not allow children or inexperienced persons to use equipment;

- The unit input cable shall not be replaced by the user.

In case of damage to the cable, switch off the unit and contact qualified personnel to replace.

When the unit is out of use for some time the electric switch supplying all the power-driven components in the system (i.e. pumps, burner, etc.) should be switched off.

## 3b) FIRING WITH GAS, LIGHT OIL OR OTHER FUELS

### GENERAL

- The burner shall be installed by qualified personnel and in compliance with regulations and provisions in force; wrong installation can cause injuries to people and animals, or damage to property, for which the manufacturer cannot be held liable.
- Before installation, it is recommended that all the fuel supply system pipes be carefully cleaned inside, to remove foreign matter that might impair the burner operation.
- Before the burner is commissioned, qualified personnel should inspect the following:

a the fuel supply system, for proper sealing;

b the fuel flow rate, to make sure that it has been set based on the firing rate required of the burner;

c the burner firing system, to make sure that it is supplied for the designed fuel type;

d the fuel supply pressure, to make sure that it is included in the range shown on the rating plate;

e the fuel supply system, to make sure that the system dimensions are adequate to the burner firing rate, and that the system is equipped with all the safety and control devices required by the regulations in force.

- When the burner is to remain idle for some time, the fuel supply tap or taps should be closed.

### SPECIAL INSTRUCTIONS FOR USING GAS

Have qualified personnel inspect the installation to ensure that:

a the gas delivery line and train are in compliance with the regulations and provisions in force;

b all gas connections are tight;

c the boiler room ventilation openings are such that they ensure the air supply flow required by the current regulations, and in any case are sufficient for proper combustion.

- Do not use gas pipes to earth electrical equipment.
- Never leave the burner connected when not in use. Always shut the gas valve off.
- In case of prolonged absence of the user, the main gas delivery valve to the burner should be shut off.

**Precautions if you can smell gas**

a do not operate electric switches, the telephone, or any other item likely to generate sparks;

b immediately open doors and windows to create an air flow to purge the room;

c close the gas valves;

d contact qualified personnel.

- Do not obstruct the ventilation openings of the room where gas appliances are installed, to avoid dangerous conditions such as the development of toxic or explosive mixtures.

### DIRECTIVES AND STANDARDS

***Gas burners***

**European directives**

-2009/142/EC (Gas Directive)
-2014/35/UE (Low Tension Directive)
-2014/30/UE (Electromagnetic compatibility Directive)
-2006/42/EC (Machinery Directive)

**Harmonized standards**

-UNI EN 676 (Automatic forced draught burners for gaseous fuels)
-EN 55014-1 (Electromagnetic compatibility- Requirements for house hold appliances, electric tools and similar apparatus)
-EN 60204-1:2006 (Safety of machinery – Electrical equipment of machines.)
-CEI EN 60335-1 (Specification for safety of household and similar electrical appliances);
-CEI EN 60335-2-102 (Household and similar electrical appliances. Safety. Particular requirements for gas, oil and solid-fuel burning appliances having electrical connections).
-UNI EN ISO 12100:2010 (Safety of machinery - General principles for design - Risk assessment and risk reduction);

***Light oil burners***

**European directives**

-2014/35/UE (Low Tension Directive)
-2014/30/UE (Electromagnetic compatibility Directive)
-2006/42/EC (Machinery Directive)

**Harmonized standards**

-UNI EN 267-2011(Automatic forced draught burners for liquid fuels)
-EN 55014-1 (Electromagnetic compatibility- Requirements for house hold appliances, electric tools and similar apparatus)
-EN 60204-1:2006 (Safety of machinery – Electrical equipment of machines.)
-CEI EN 60335-1 (Specification for safety of household and similar electrical appliances);
-CEI EN 60335-2-102 (Household and similar electrical appliances. Safety. Particular requirements for gas, oil and solid-fuel burning appliances having electrical connections).
-UNI EN ISO 12100:2010 (Safety of machinery - General principles for design - Risk assessment and risk reduction);

**National Standard**

-UNI 7824 (Atomizing burners of the monobloc type. Characteristics and test methods)

***Heavy oil burners***

**European Directives**

-2014/35/UE (Low Tension Directive)
-2014/30/UE (Electromagnetic compatibility Directive)
-2006/42/EC (Machinery Directive)

**Harmonized standards**

-UNI EN 267(Automatic forced draught burners for liquid fuels)
-EN 55014-1 (Electromagnetic compatibility- Requirements for house hold appliances, electric tools and similar apparatus)
-EN 60204-1:2006 (Safety of machinery – Electrical equipment of machines.)
-CEI EN 60335-1 (Specification for safety of household and similar electrical appliances);
-CEI EN 60335-2-102 (Household and similar electrical appliances. Safety. Particular requirements for gas, oil and solid-fuel burning appliances having electrical connections).
-UNI EN ISO 12100:2010 (Safety of machinery - General principles for design - Risk assessment and risk reduction);

**Norme nazionali / National Standard**

-UNI 7824 (Atomizing burners of the monobloc type. Characteristics and test methods.

***Gas - Light oil burners***

**European Directives**

-2009/142/EC (Gas Directive)
-2014/35/UE (Low Tension Directive)
-2014/30/UE (Electromagnetic compatibility Directive)
-2006/42/EC (Machinery Directive)

**Harmonized standards**

-UNI EN 676 (Automatic forced draught burners for gaseous fuels)
-UNI EN 267(Automatic forced draught burners for liquid fuels)
-EN 55014-1 (Electromagnetic compatibility- Requirements for house hold appliances, electric tools and similar apparatus)

-EN 60204-1:2006 (Safety of machinery – Electrical equipment of machines.)
-CEI EN 60335-1 (Specification for safety of household and similar electrical appliances);
-CEI EN 60335-2-102 (Household and similar electrical appliances. Safety. Particular requirements for gas, oil and solid-fuel burning appliances having electrical connections).
-UNI EN ISO 12100:2010 (Safety of machinery - General principles for design - Risk assessment and risk reduction);

**Norme nazionali / National Standard**

-UNI 7824 (Atomizing burners of the monobloc type. Characteristics and test methods.

***Gas - Heavy oil burners***

**European directives:**

-2009/142/EC (Gas Directive)
-2014/35/UE (Low Tension Directive)
-2014/30/UE (Electromagnetic compatibility Directive)
-2006/42/EC (Machinery Directive)

**Harmonized standards**

-UNI EN 676 (Automatic forced draught burners for gaseous fuels)
-EN 55014-1 (Electromagnetic compatibility- Requirements for house hold appliances, electric tools and similar apparatus)
-EN 60204-1:2006 (Safety of machinery – Electrical equipment of machines.)
-CEI EN 60335-1 (Specification for safety of household and similar electrical appliances);
-CEI EN 60335-2-102 (Household and similar electrical appliances. Safety. Particular requirements for gas, oil and solid-fuel burning appliances having electrical connections).
-UNI EN ISO 12100:2010 (Safety of machinery - General principles for design - Risk assessment and risk reduction);

**National Standard**

- UNI 7824 (Atomizing burners of the monobloc type. Characteristics and test methods.

***Industrial burners***

**European directives**

-2009/142/EC (Gas Directive)
-2014/35/UE (Low Tension Directive)
-2014/30/UE (Electromagnetic compatibility Directive)
-2006/42/EC (Machinery Directive)

**Harmonized standards**

-EN 55014-1 (Electromagnetic compatibility- Requirements for house hold appliances, electric tools and similar apparatus)
-EN 746-2 (Industrial thermoprocessing equipment - Part 2: Safety requirements for combustion and fuel handling systems)
-UNI EN ISO 12100:2010 (Safety of machinery - General principles for design - Risk assessment and risk reduction);
-EN 60204-1:2006 (Safety of machinery – Electrical equipment of machines.)
-EN 60335-2 (Electrical equipment of non-electric appliances for household and similar purposes. Safety requirements)

## Burner data plate

For the following information, please refer to the data plate:

- burner type and burner model: must be reported in any communication with the supplier
- burner ID (serial number): must be reported in any communication with the supplier
- date of production (year and month)
- information about fuel type and network pressure

| | |
|---|---|
| Type | -- |
| Model | -- |
| Year | -- |
| S.Number | -- |
| Output | -- |
| Oil Flow | -- |
| Fuel | -- |
| Category | -- |
| Gas Pressure | -- |
| Viscosity | -- |
| El.Supply | -- |
| El.Consump. | -- |
| Fan Motor | -- |
| Protection | -- |
| Drwaing n° | -- |
| P.I.N. | -- |

**SYMBOLS USED**

***WARNING!*** Failure to observe the warning may result in irreparable damage to the unit or damage to the environment

***DANGER!*** Failure to observe the warning may result in serious injuries or death.

***WARNING!*** Failure to observe the warning may result in electric shock with lethal consequences

Figures, illustrations and images used in this manual may differ in appearance from the actual product.

## PART I: SPECIFICATIONS

### GENERAL FEATURES

This particular burner series has been studied to use compressed air or alternatively steam, to atomize heavy oil. In this way we have achieved higher efficiency compared to mechanical atomization. These burners are equipped with a low pressure nozzle which permits to save fuel and, above all, to preserve the whole system. All burners are progressive type, complete with electrical panel, with self cleaning nozzle system and oil pump motor to be separately installed by the final user. A supplying system of compressed air and steam at 8 bar must be provided on the site. All burners are ignited by means of a pilot flame burning LPG or Natural gas. The standard version of the burner uses compressed air to atomize oil fuel. If compressed air is not available on site, it is possible to use steam to atomise oil fuel by using a special kit. In any case compressed air is essential: to ignite the burner when steam is not available, to control valves and for self cleaning nozzle.

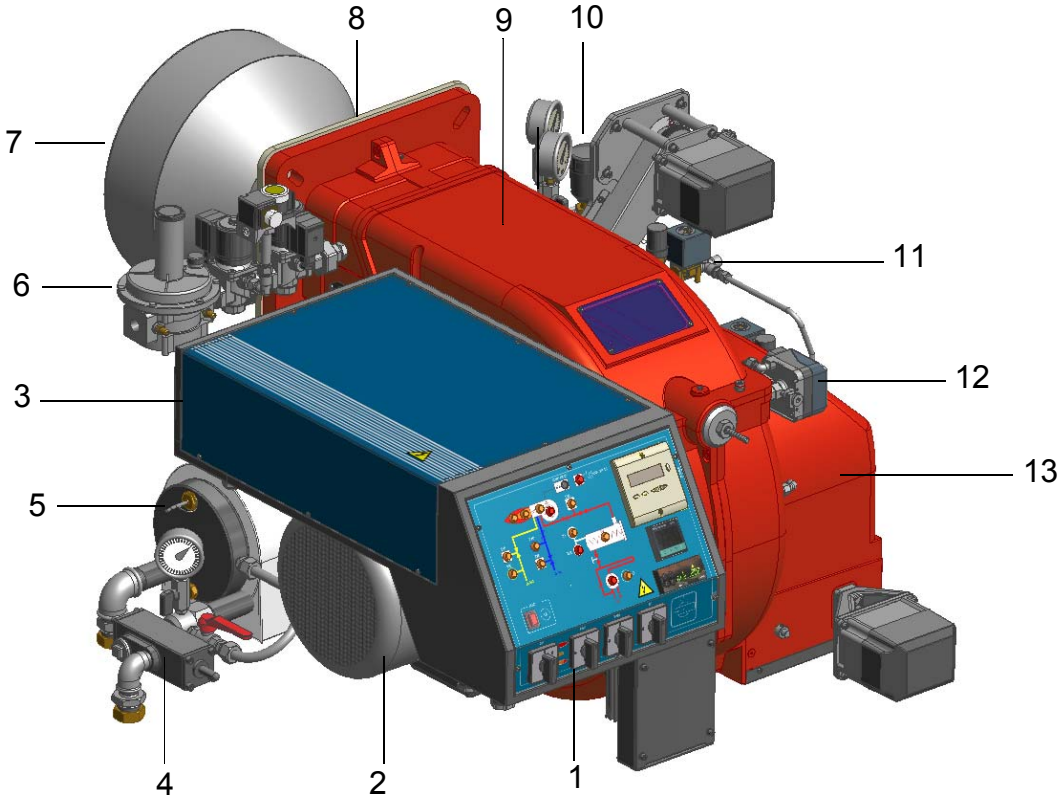


Fig. 1

Note: the figure is indicative only.

1 Control panel
2 Fan motor
3 Electrical panel
4 Pressure governor
5 Oil pre-heater tank
6 Pilot gas train
7 Blast tube-combustion head
8 Burner flange
9 Burner cover
10 Oil train
11 Compressed air train
12 Air pressure switch
13 Air inlet

### *Burner model identification*

Burners are identified by burner type and model. Burner model identification is described as follows.

| Type | **PBY90** | Model | **H-.** | **PR.** | **S.** | | **A.** | **EA.** |
|---|---|---|---|---|---|---|---|---|
| | **(1)** | | **(2)** | **(3)** | **(4)** | **(5)** | **(6)** | **(7)** |

| | |
|---|---|
| (1) BURNER TYPE | **PBY90, PBY91, PBY92, PBY93, PBY510, PBY515, PBY520, PBY525** |
| (2) FUEL | H - heavy oil, max viscosity 4000cSt (530°E) @ 50°C |
| (3) OPERATION (Available versions) | PR - Progressive MD - Fully modulating |
| (4) BLAST TUBE | S - Standard L - Extended |
| (5) DESTINATION COUNTRY | * - see data plate |
| (6) BURNER VERSION | A - Standard |
| (6) MICRO-PROCESSOR CONTROL | EA = micro-processor control, without inverter<br>EB = micro-processor control, with inverter |

### *Technical Specifications*

| **BURNER** | | **PBY90** | **PBY91** | **PBY92** | **PBY93** |
|---|---|---|---|---|---|
| Output | min ÷ max kW | 670 - 2000 | 500 - 2500 | 700 - 3000 | 900 - 3700 |
| Fuel | | Heavy oil | | | |
| Oil viscosity | | See “Burner model identification” table | | | |
| Heavy oil rate | min. ÷ max. kg/h | 60 - 178 | 45 - 223 | 62 - 267 | 80 - 330 |
| Gas pressure | max. mbar | 500 | | | |
| Gas pressure after gas governor | mbar | 100 | | | |
| Compressed air pressure | min. ÷ max. bar | 4 - 10 | | | |
| Power supply | | 400V 3N a.c. 50Hz | | | |
| Total power consumption (with Cucchi Pump) | kW | 12.25 | 13.25 | 18.75 | 26.75 |
| Total power consumption (with Kral Pump) | kW | 11.87 | 12.87 | 18.55 | 26.55 |
| Fan motor | kW | 3 | 4 | 5.5 | 7.5 |
| Pump motor (Cucchi) | kW | 0.75 | 0.75 | 0.75 | 0.75 |
| Pump motor (Kral) | kW | 0.37 | 0.37 | 0.55 | 0.55 |
| Pre-heater resistors | kW | 8 | 8 | 12 | 18 |
| Protection | | IP40 | | | |
| Approx. weight | kg | 165 | 175 | 185 | 195 |
| Operation | | Progressive - Fully modulating | | | |
| Operating temperature | °C | -10 ÷ +50 | | | |
| Storage Temperature | °C | -20 ÷ +60 | | | |
| Working service* | | Intermittent | | | |

Heavy oil net calorific value (Hi): 40.43 MJ/kg (average value).

*** NOTE ON THE WORKING SERVICE: the control box automatically stops after 24h of continuous working. The control box immediately starts up, automatically.**

**WARNING:** the burners are supplied for 400V three phase supply; in case of three phase 230V supply, replace the thermal overload relays. Maximum output is referred to a null backpressure in the furnace.

| BURNER | | PBY510 | PBY515 | PBY520 | PBY525 |
|---|---|---|---|---|---|
| Output | min ÷ max kW | 1100 - 5000 | 1200 - 6000 | 1200 - 6500 | 1800 - 7300 |
| Fuel | | Heavy oil | | | |
| Oil viscosity | | See “Burner model identification” table | | | |
| Heavy oil rate | min. ÷ max. kg/h | 98 - 446 | 107 - 535 | 107 - 579 | 160 - 651 |
| Gas pressure | max. mbar | 500 | | | |
| Gas pressure after gas governor | mbar | 100 | | | |
| Compressed air pressure | min. ÷ max. bar | 4 - 10 | | | |
| Power supply | | 400V 3N a.c. 50Hz | | | |
| Total power consumption (with Cucchi Pump) | kW | 26.75 | 30.25 | 40.25 | 43.75 |
| Total power consumption (with Kral Pump) | kW | 26.55 | 30.05 | 40.05 | 43.55 |
| Fan motor | kW | 7.5 | 11 | 15 | 18.5 |
| Pump motor (Cucchi) | kW | 0.75 | 0.75 | 0.75 | 0.75 |
| Pump motor (Kral) | kW | 0.55 | 0.55 | 0.55 | 0.55 |
| Pre-heater resistors | kW | 18 | 18 | 24 | 24 |
| Protection | | IP40 | | | |
| Approx. weight | kg | 230 | 240 | 250 | 260 |
| Operation | | Progressive - Fully modulating | | | |
| Operating temperature | °C | -10 ÷ +50 | | | |
| Storage Temperature | °C | -20 ÷ +60 | | | |
| Working service* | | Intermittent | | | |

Heavy oil net calorific value (Hi): 40.43 MJ/kg (average value).

*** NOTE ON THE WORKING SERVICE: the control box automatically stops after 24h of continuous working. The control box immediately starts up, automatically.**

**WARNING:** the burners are supplied for 400V three phase supply; in case of three phase 230V supply, replace the thermal overload relays. Maximum output is referred to a null backpressure in the furnace.

## *Overall dimensions (mm)*

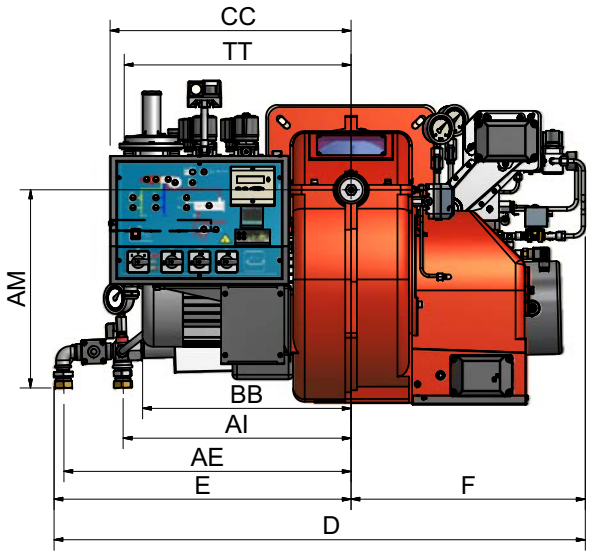


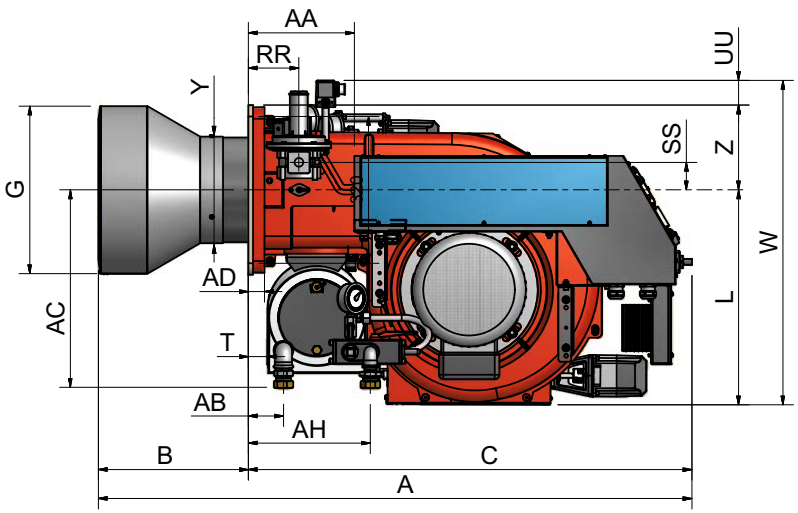


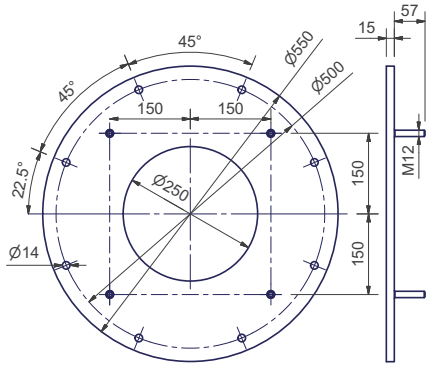


Reccomended counterflange

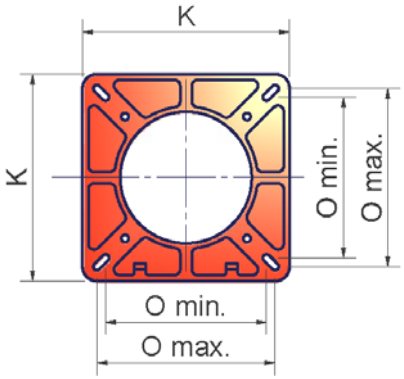


Burner flange

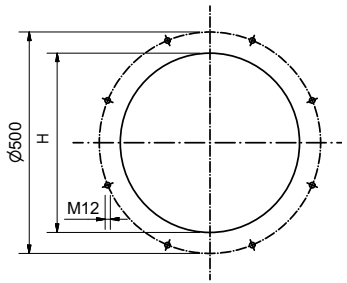


boiler recommended drilling template

**PBY90, PBY91, PBY92, PBY93: A COUNTERFLANGE IS MANDATORY**:a gasket must be placed between the generator and the counterflange

| | A | AA | AD | AH | AI | B | BB | C | CC | D | E | F | G | H | K | L | M | O min | O max | RR | SS | T | TT | UU | W | Y | Z |
|---|---|---|---|---|---|---|---|---|---|---|---|---|---|---|---|---|---|---|---|---|---|---|---|---|---|---|---|
| **PBY90** | 1282 | 237 | 35 | 266 | 497 | 318 | 455 | 964 | 525 | 1158 | 647 | 510 | 306 | 346 | 360 | 468 | M12 | 280 | 310 | 110 | 60 | 41 | 495 | 53 | 707 | 228 | 185 |
| **PBY91** | 1285 | 237 | 35 | 266 | 497 | 321 | 455 | 964 | 525 | 1158 | 647 | 510 | 324 | 364 | 360 | 468 | M12 | 280 | 310 | 110 | 60 | 41 | 495 | 53 | 707 | 228 | 185 |
| **PBY92** | 1291 | 237 | 35 | 266 | 497 | 327 | 455 | 964 | 525 | 1158 | 647 | 510 | 365 | 405 | 360 | 468 | M12 | 280 | 310 | 110 | 60 | 41 | 495 | 53 | 707 | 228 | 185 |
| **PBY93** | 1291 | 237 | 35 | 266 | 497 | 327 | 455 | 964 | 525 | 1158 | 647 | 510 | 365 | 405 | 360 | 468 | M12 | 280 | 310 | 110 | 60 | 41 | 495 | 53 | 707 | 239 | 185 |

**PBY510**

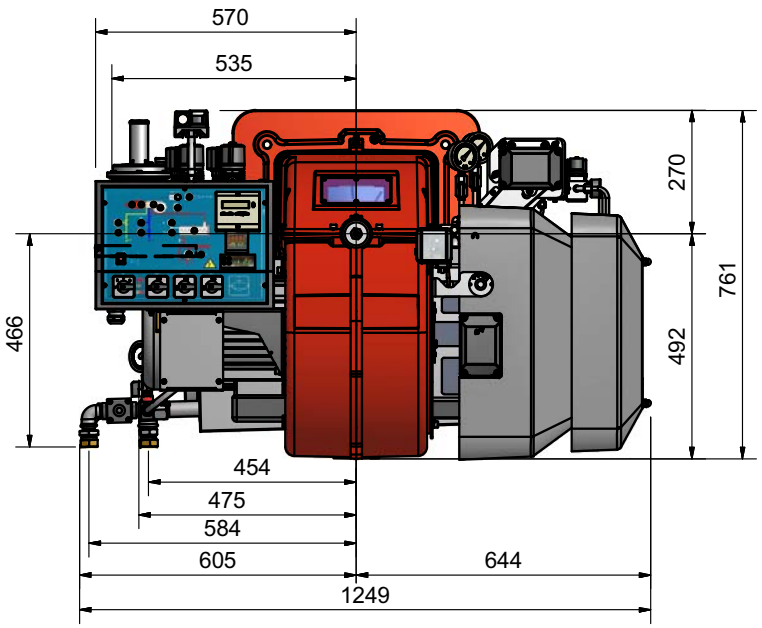


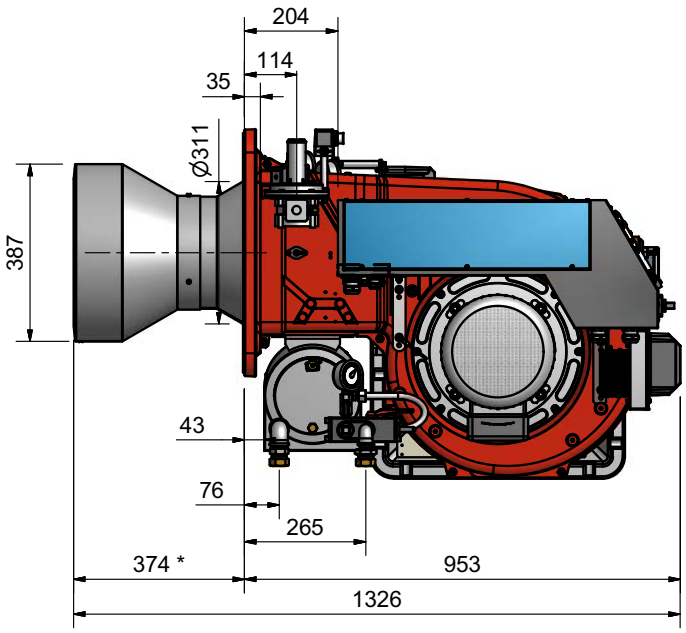


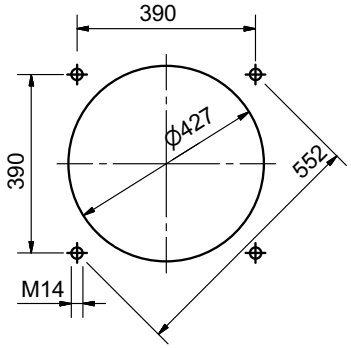


boiler recommended drilling template

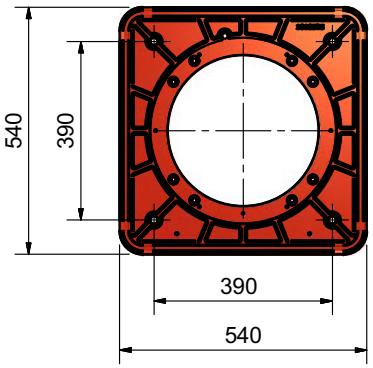


Burner flange

**PBY515, PBY520, PBY525**

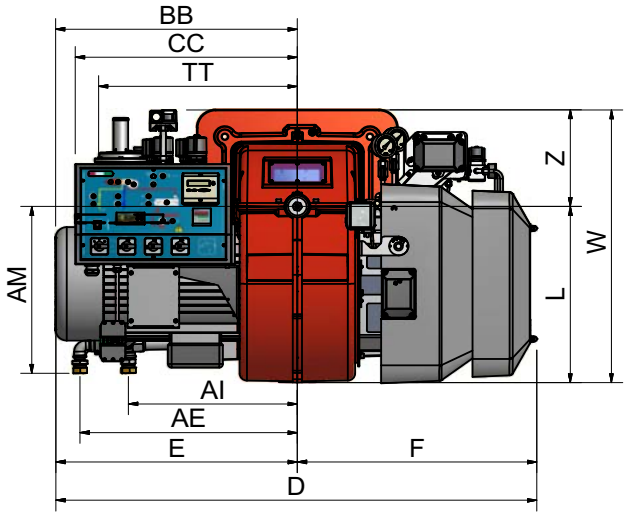


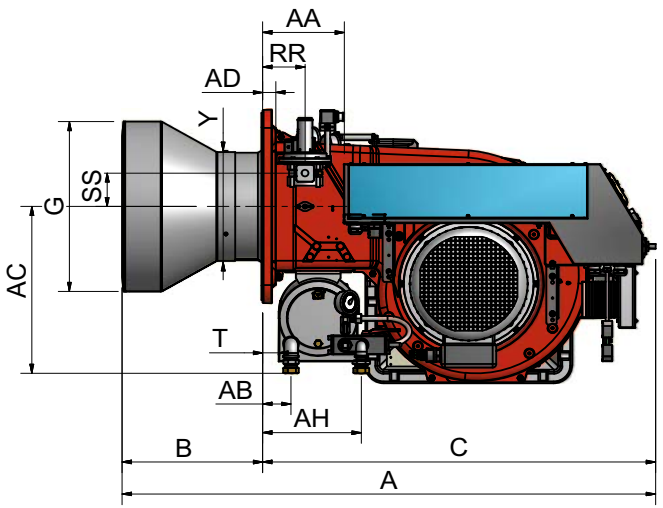


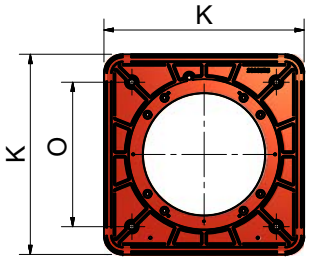


Burner flange

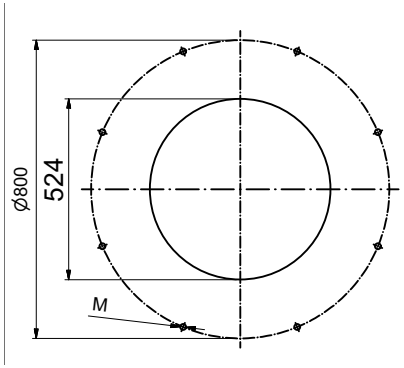


boiler recommended drilling template

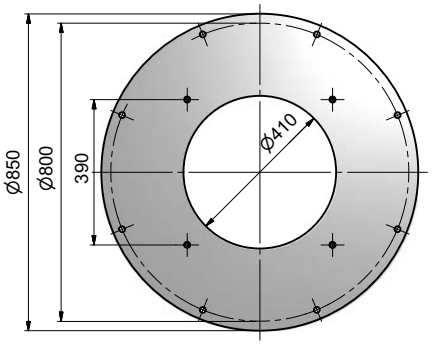


Reccomended counterflange

**A COUNTERFLANGE IS MANDATORY**:a gasket must be placed between the generator and the counterflange

| | A (AS) | A (AL) | AA | AB | AD | AE | AH | AI | AM | B (BS) | B (BL) | BB | C | CC | D | E | F | G | K | L | M | O | RR | SS | T | TT | Y | W | Z |
|---|---|---|---|---|---|---|---|---|---|---|---|---|---|---|---|---|---|---|---|---|---|---|---|---|---|---|---|---|---|
| **PBY515** | 1331 | 1511 | 204 | 76 | 35 | 584 | 265 | 454 | 466 | 378 | 558 | 517 | 953 | 570 | 1249 | 605 | 644 | 474 | 540 | 492 | M16 | 390 | 114 | 93 | 43 | 535 | 329 | 761 | 270 |
| **PBY520** | 1331 | 1511 | 204 | 76 | 35 | 584 | 265 | 454 | 466 | 378 | 558 | 517 | 953 | 570 | 1249 | 605 | 644 | 474 | 540 | 492 | M16 | 390 | 114 | 93 | 43 | 535 | 329 | 761 | 270 |
| **PBY525** | 1434 | 1614 | 219 | 76 | 35 | 584 | 265 | 454 | 466 | 378 | 558 | 650 | 1056 | 597 | 1293 | 649 | 644 | 474 | 540 | 492 | M16 | 390 | 114 | 93 | 43 | 535 | 329 | 761 | 270 |

*S = measure referred to burner fitted with standard blast tube

*L = measure referred to burner fitted with extended blast tube

Fig. 2 - (3I2D-03 v4) **Hydraulic diagram**

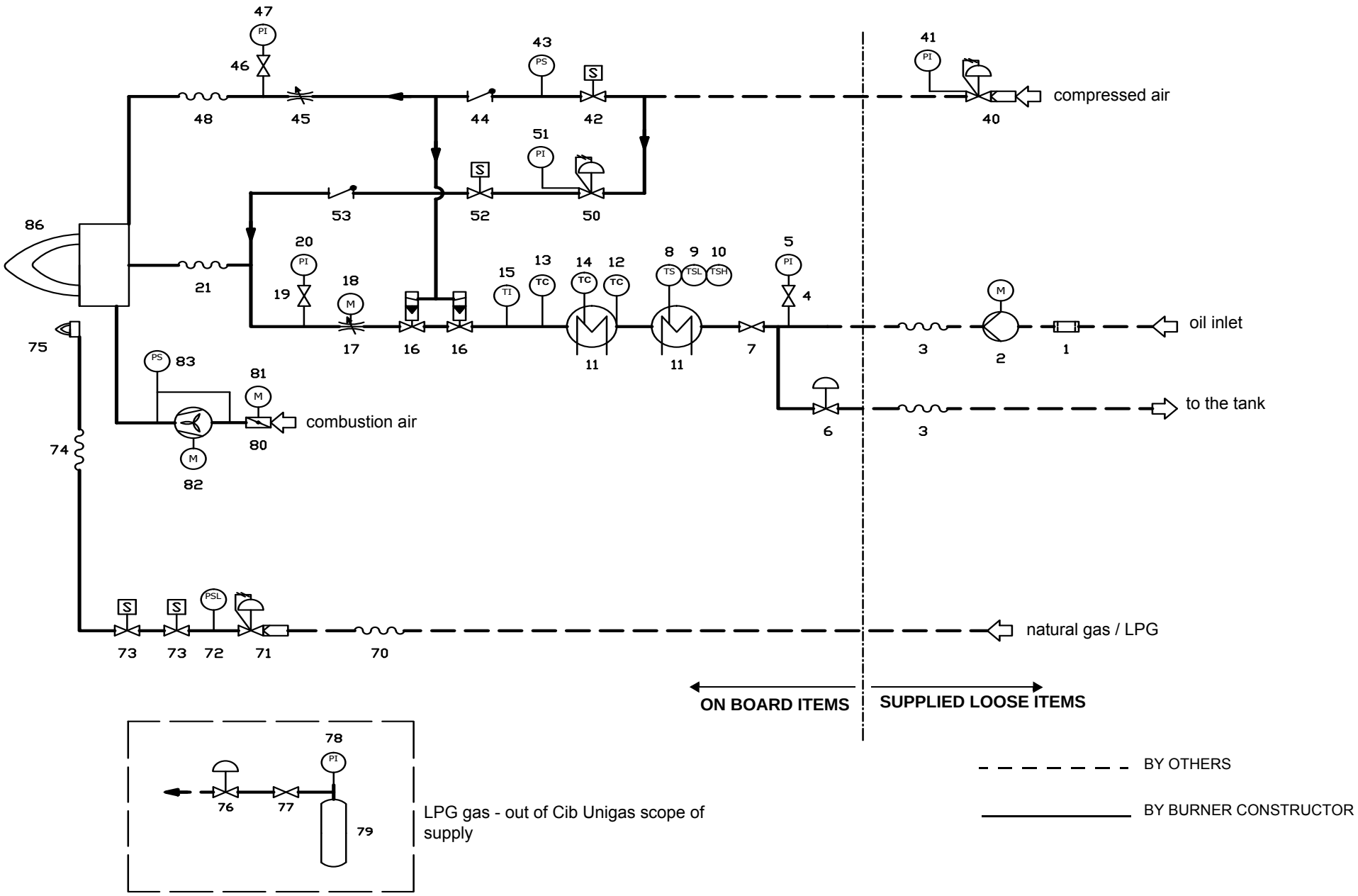

| 3I2D-03 rev.4 | LEGEND |
|---|---|
| **POS** | **OIL TRAIN** |
| 1 | Filter |
| 2 | Pump with electromotor |
| 3 | Flexible hose |
| 4 | Maual valve |
| 5 | Pressure gauge |
| 6 | Pressure governor |
| 7 | Maual valve |
| 8 | Thermostat |
| 9 | Low thermostat |
| 10 | High thermostat |
| 11 | Electrical preheater tank |
| 12 | Temperature probe |
| 13 | Temperature probe |
| 14 | Temperature probe |
| 15 | Temperature gauge |
| 16 | Pneumatic valve |
| 17 | Metering valve with servomotor |
| 18 | Actuator |
| 19 | Maual valve |
| 20 | Pressure gauge |
| 21 | Flexible hose |
| | **COMPRESSED AIR TRAIN (ATOMIZATION)** |
| 40 | Pressure governor with filter |
| 41 | Pressure gauge |
| 42 | Solenoid valve |
| 43 | Pressure switch |
| 44 | One-way valve |
| 45 | Metering valve |
| 46 | Manual valve |
| 47 | Pressure gauge |
| 48 | Flexible hose |

**NOTE** The following items are out of CIB UNIGAS scope of supply
77 - 78 - 79

| | |
|---|---|
| | **COMPRESSED AIR TRAIN (PURGE)** |
| 50 | Pressure governor with filter |
| 51 | Pressure gauge |
| 52 | Solenoid valve |
| 53 | One-way valve |
| | **PILOT GAS TRAIN** |
| 71 | Pressure governor with filter |
| 72 | Pressure switch |
| 73 | Solenoid valve |
| 74 | Flexible hose |
| 75 | Pilot burner |
| 76 | Pressure governor for L.P.G. tank |
| 77 | Manual valve |
| 78 | Pressure gauge |
| 79 | L.P.G. tank |
| | **COMBUSTION AIR TRAIN** |
| 80 | Air damper |
| 81 | Actuator |
| 82 | Remote draught fan with electromotor |
| 83 | Pressure switch - PA |
| 86 | Burner |

### *How to read the burner "Performance curve"*

To check if the burner is suitable for the boiler to which it must be installed, the following parameters are needed:

- furnace input, in kW or kcal/h (kW = kcal/h / 860);
- backpressure (data are available on the boiler ID plate or in the user's manual).

Example:

Furnace input: 600kW

Backpressure: 4mbar

In the "Performance curve" diagram, draw a vertical line matching the furnace input value and an horizontal line matching the backpressure value. The burner is suitable if the intersection point A is inside the performance curve.

Data are referred to standard conditions: atmospheric pressure at 1013mbar, ambient temperature at 15°C.

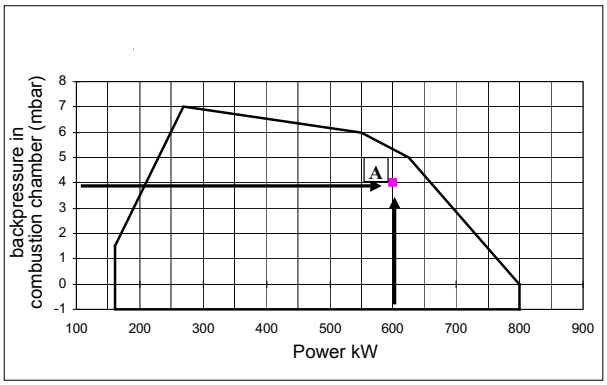


### *Performance Curves*

**NOTE:** The performance curve is a diagram that represents the burner performance in the type approval phase or in the laboratory tests, but does not represent the regulation range of the machine. On this diagram the maximum output point is usually reached by adjsuting the combustion head to its "MAX" position (see paragraph "Adjusting the combustion head"); the minimum output point is reached setting the combustion head to its "MIN" position. During the first ignition, the combustion head is set in order to find a compromise between the burner output and the generator specifications, that is why the minimum output may be different from the Performance curve minimum.

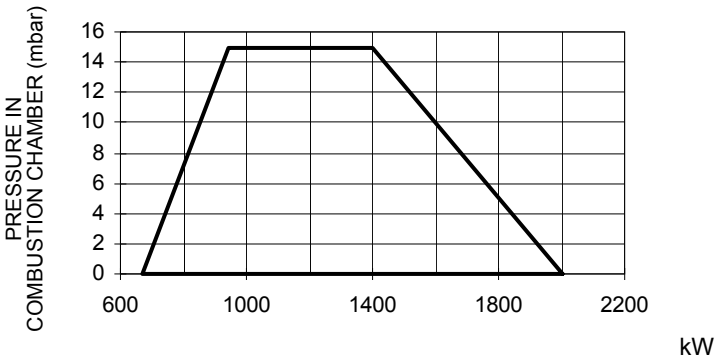


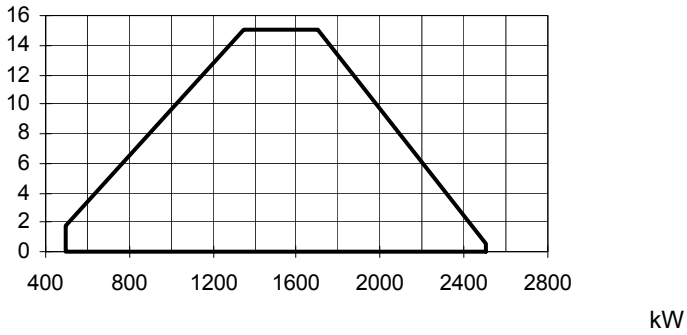


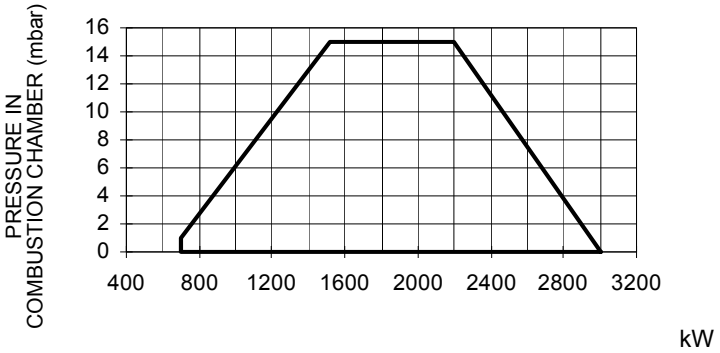


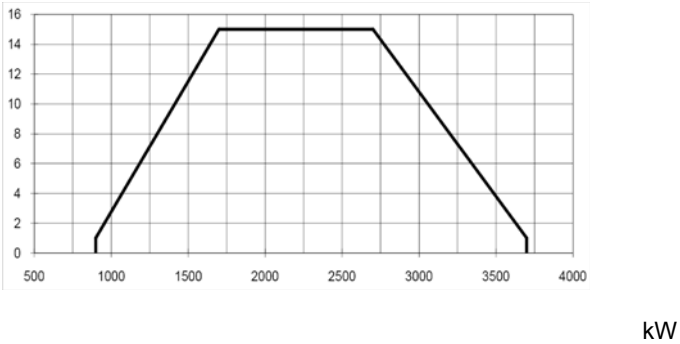

**PBY510**

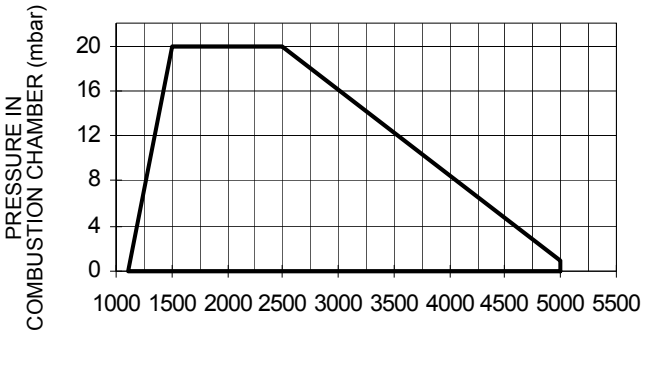


**PBY515**

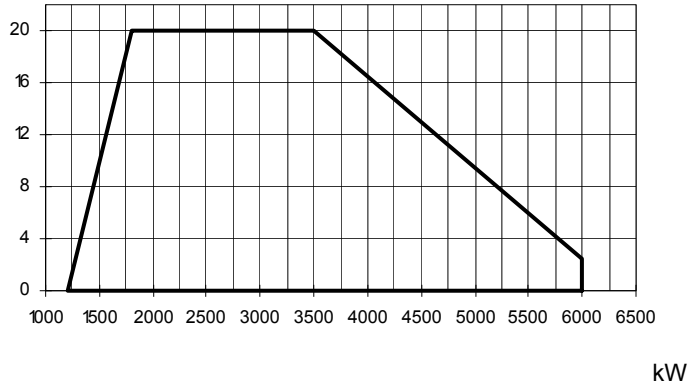


**PBY520**

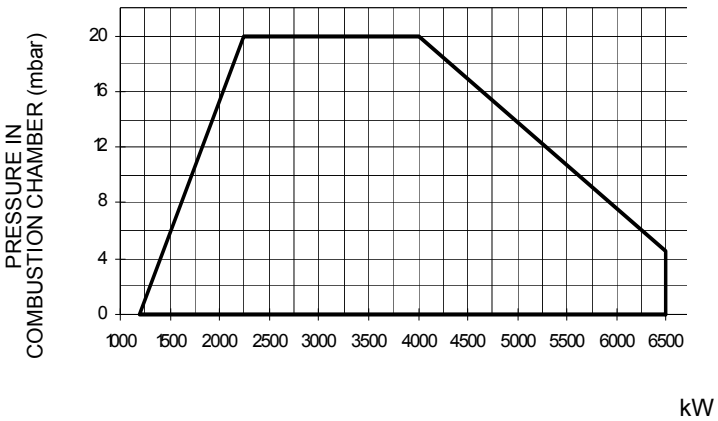


**PBY525**

To get the input in kcal/h, multiply value in kW by 860.

Data are referred to standard conditions: atmospheric pressure at 1013mbar, ambient temperature at 15°C.

**NOTE:** The performance curve is a diagram that represents the burner performance in the type approval phase or in the laboratory tests, but does not represent the regulation range of the machine. On this diagram the maximum output point is usually reached by adjsuting the combustion head to its “MAX” position (see paragraph “Adjusting the combustion head”); the minimum output point is reached setting the combustion head to its “MIN” position. During the first ignition, the combustion head is set in order to find a compromise between the burner output and the generator specifications, that is why the minimum output may be different from the Performance curve minimum.

## MOUNTING AND CONNECTING THE BURNER

### *Packing*

Burners are despatched in wooden crates whose dimensions are:

- PBY90-91-92-93: 1730 mm x 1280 mm x 1020 mm(L x P x H)
- PBY510-515-520-525: 1730 mm x 1430 mm x 1130 mm(L x P x H)

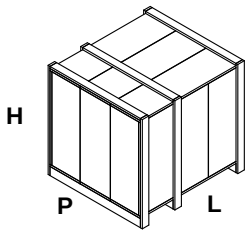


Packing cases of this kind are affected by humidity and are not suitable for stacking. The following are placed in each packing case:

- burner;
- gasket/ceramic fiber plait to be inserted between the burner and the boiler;
- oil flexible hoses;
- oil filter;
- envelope containing this manual.

To get rid of the burner's packing, follow the procedures laid down by current laws on disposal of materials.

### *Handling the burner*

***ATTENTION! The lhandling operations must be carried out by specialised and trained personnel. If these operations are not carried out correctly, the residual risk for the burner to overturn and fall down still persists.***
***To move the burner, use means suitable to support its weight (see paragraph "Technical specifications").***
***The unpacked burner must be lifted and moved only by means of a fork lift truck.***

The burner is mounted on a stirrup provided for handling the burner by means of a fork lift truck: the forks must be inserted into the A anb B ways. Remove the stirrup only once the burner is installed to the boiler.

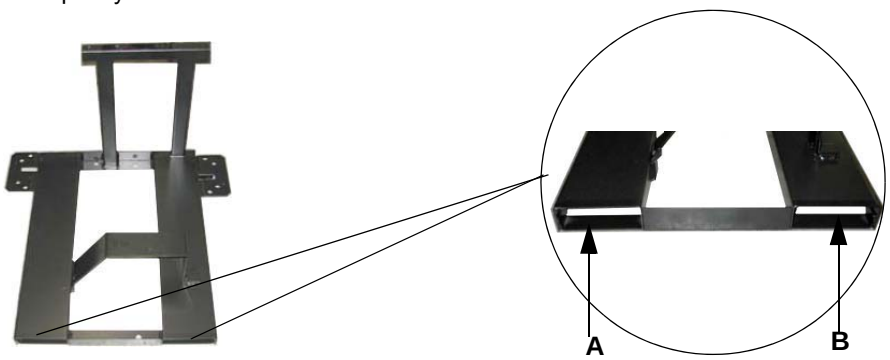

### *Fitting the burner to the boiler*

To install the burner into the boiler, proceed as follows:

1 make a hole on the closing door of the combustion chamber as described on paragraph “Overall dimensions”)
2 place the burner to the boiler: lift it up and handle it according to the procedure described on paragraph “Handling the burner”;
3 place the 4 stud bolts (5) on boiler’s door, according to the burner drilling template described on paragraph “Overall dimensions”;
4 fasten the 4 stud bolts;
5 place the gasket on the burner flange;
6 install the burner into the boiler;
7 fix the burner to the stud bolts, by means of the fixing nuts, according to the next picture.
8 After fitting the burner to the boiler, ensure that the gap between the blast tube and the refractory lining is sealed with appropriate insulating material (ceramic fibre cord or refractory cement).

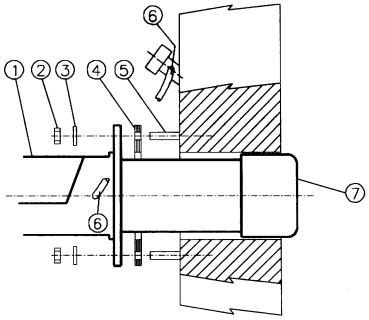


**Keys**

1 Burner
2 Fixing nut
3 Washer
4 Sealing gasket
5 Stud bolt
7 Blast tube

### *Matching the burner to the boiler*

The burners described in this manual have been tested with combustion chambers that comply with EN676 regulation and whose dimensions are described in the diagram . In case the burner must be coupled with boilers with a combustion chamber smaller in diameter or shorter than those described in the diagram, please contact the supplier, to verify that a correct matching is possible, with respect of the application involved. To correctly match the burner to the boiler verify the type of the blast tube . Verify the necessary input and the pressure in combustion chamber are included in the burner performance curve; otherwise the choice of the burner must be revised consulting the burner manufacturer. To choose the blast tube lenght follow the instructions of the boiler manufacturer. In absence of these consider the following:

- Cast-iron boilers, three pass flue boilers (with the first pass in the rear part): the blast tube must protrude no more than **Dist** = 100 mm into the combustion chamber. (please see the picture below)
- Pressurised boilers with flame reversal: in this case the blast tube must penetrate **Dm** 50 ÷ 100 mm into combustion chamber in respect to the tube bundle plate.(please see the picture below)

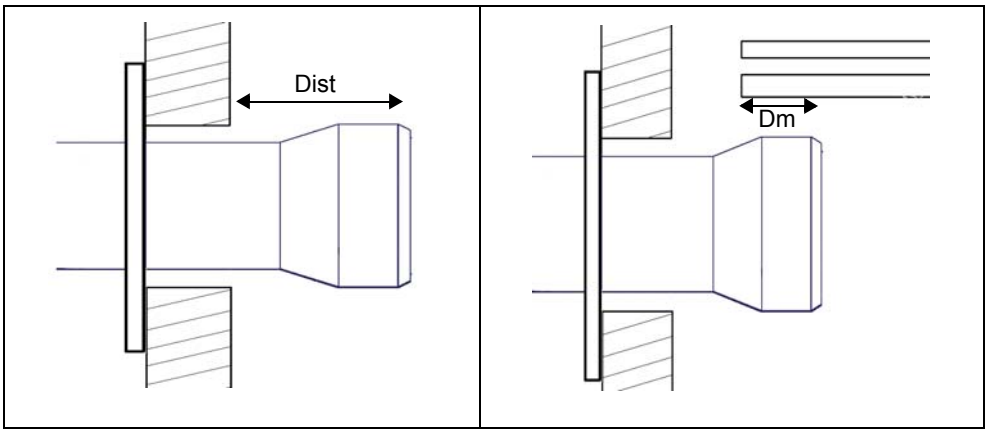


The length of the blast tubes  does not always allow this requirement to be met, and thus it may be necessary to use a suitably-sized

spacer to move the burner backwards or to design a blast tube tha suites the utilisation (please, contact the manifacturer).

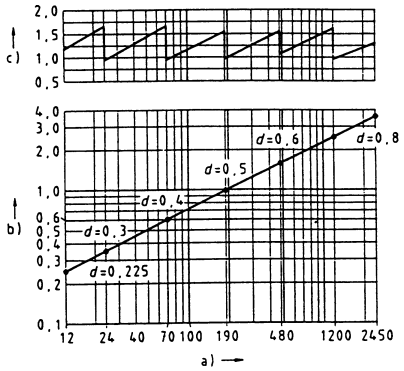

Fig. 3

**Key**

a) Heat output in kW

b) Lenght of the flame tube in meters

c) Flame tube firing intensity in MW/m$^3$

d) Combustion chamber diameter (m)

Fig. 3 - Firing intensity, diameter and lenght of the test flame tube as a function of the heat input in kW.

The burner is designed to work positioned according to the picture below. Set the upper side of the burner flange in a horizontal position, in order to find the correct inclination of the pre-heater tank. For different installations, please contact the Technical Department.

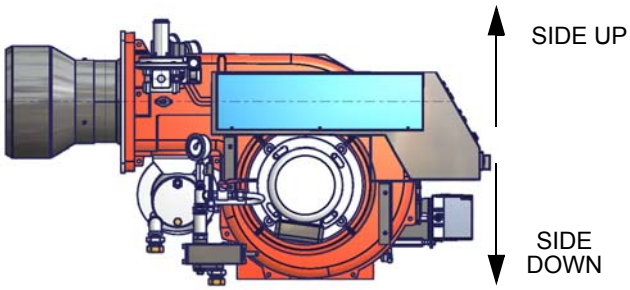


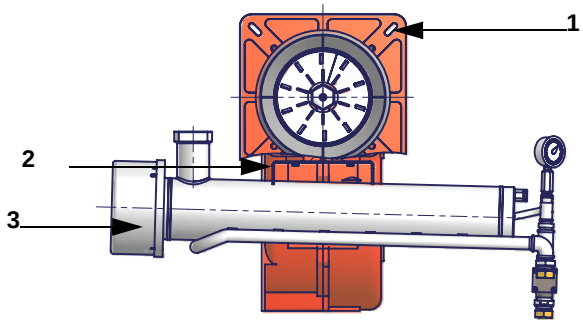


**Key**

1 Burner flange (upper side indicated)

2 Bracket

3 Pre-heating tank on the burner

## OIL TRAIN CONNECTIONS

### *About the use of fuel pumps*

- Do not use fuel with additives to avoid the possible formation over time of compounds which may deposit between the gear teeth, thus obstructing them.
- After filling the tank, wait before starting the burner. This will give any suspended impurities time to deposit on the bottom of the tank, thus avoiding the possibility that they might be sucked into the pump.
- On initial commissioning a "dry" operation is foreseen for a considerable length of time (for example, when there is a long suction line to bleed). To avoid damages inject some lubrication oil into the vacuum inlet.
- Care must be taken when installing the pump not to force the pump shaft along its axis or laterally to avoid excessive wear on the joint, noise and overloading the gears.
- Pipes should not contain air pockets. Rapid attachment joint should therefore be avoided and threaded or mechanical seal junctions preferred. Junction threads, elbow joints and couplings should be sealed with removable sg component. The number of junctions should be kept to a minimum as they are a possible source of leakage.
- Do not use PTFE tape on the suction and return line pipes to avoid the possibility that particles enter circulation. These could deposit on the pump filter or the nozzle, reducing efficiency. Always use O-Rings or mechanical seal (copper or aluminium gaskets) junctions if possible.
- An external filter should always be installed in the suction line upstream the fuel unit.

### *Connecting the pump*

According to the pump provided, proceed as follows:

1 emove the closing nuts A and B on the inlet and return connections of the pump;

2 connect the pump **being careful to avoid exchanging the lines**: see the arrows marked on the pump.

For further information, refer to the technical documentation of the pump.

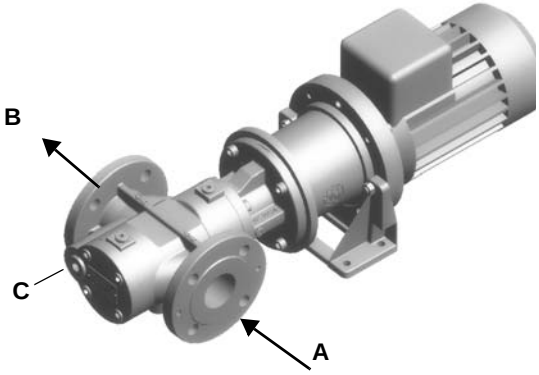


Fig. 4 - Kral

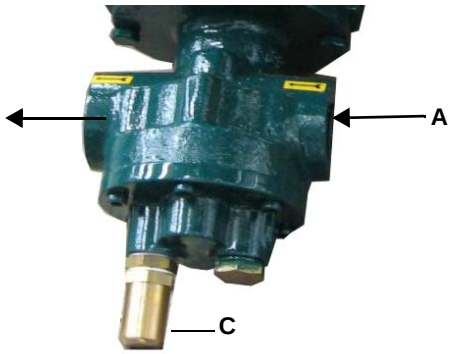


Fig. 5 - Cucchi

**Legend**

A - Inlet

B - Outlet

C - Overflow pressure adjusting screw

### *Heavy oil pumps*

The pump provided with the burner must be installed according to the hydraulic diagram.

| Pumps | capacity [l/h] | power [kW] | speed [rpm] | connection | max outlet pressure [bar] | max inlet pressure (bar) |
|---|---|---|---|---|---|---|
| Kral KF 10 BCB | 500 | 0,37 | 1500 | DN25 | 10 | 2 |
| Kral KF 15 BCB | 800 | 0,55 | 1500 | DN25 | 10 | 2 |
| Kral KF 20 BCB | 1100 | 0,55 | 1500 | DN25 | 10 | 2 |
| Cucchi FMG25 | 1400 | 0.75 | 1500 | - | 10 | 2 |

For further details see the manifacturer documentation.

### *Suntec TV Pressure governor*

**Pressure adjustment**

Remove cap-nut 1 and the gasket 2, unscrew the lock nut 4. To increase pressure, twist adjusting screw 3 clockwise.

To decrease the pressure, twist screw counterclockwise. Tight the lock nut 4, refit the gasket 2 and the cap nut 1.

**Key**

1 Cap nut
2 Gasket
3 Adjusting screw
4 Lock nut
5 Gasket

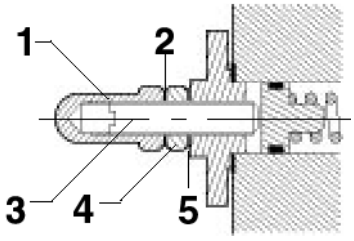


Fig. 6

### *Connecting the oil flexible hoses to the burner*

To connect the flexible oil hoses to the pump, proceed as follows, according to the pump provided:

1 remove the closing nuts **H** (on the heater) and **R** (on the oil pressure governor) of the inlet and return connections;

2 screw the rotating nut of the two flexible hoses on the burner **being careful to avoid exchanging the inlet and return lines**: see the arrows marked that show the inlet and the return.

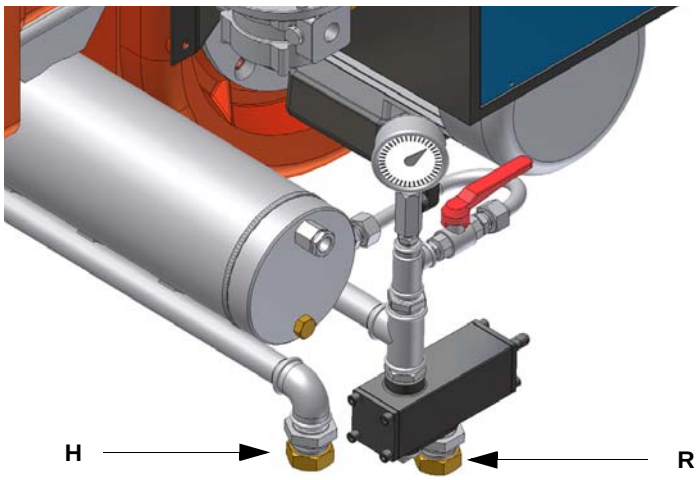


## *Fuel Oil filters*

| | Item | Note | Connection | Max. operating pressure | Max. operating temperature | Filtering degree | Protection |
|---|---|---|---|---|---|---|---|
| 4 | 20453 | with heating elements | 1” 1/2 | 2 bar | -20, 60 °C | 300 µ | IP42 |

### *Connecting the compressed air hoses*

To connect  the compressed air supply, refer to the following pictures

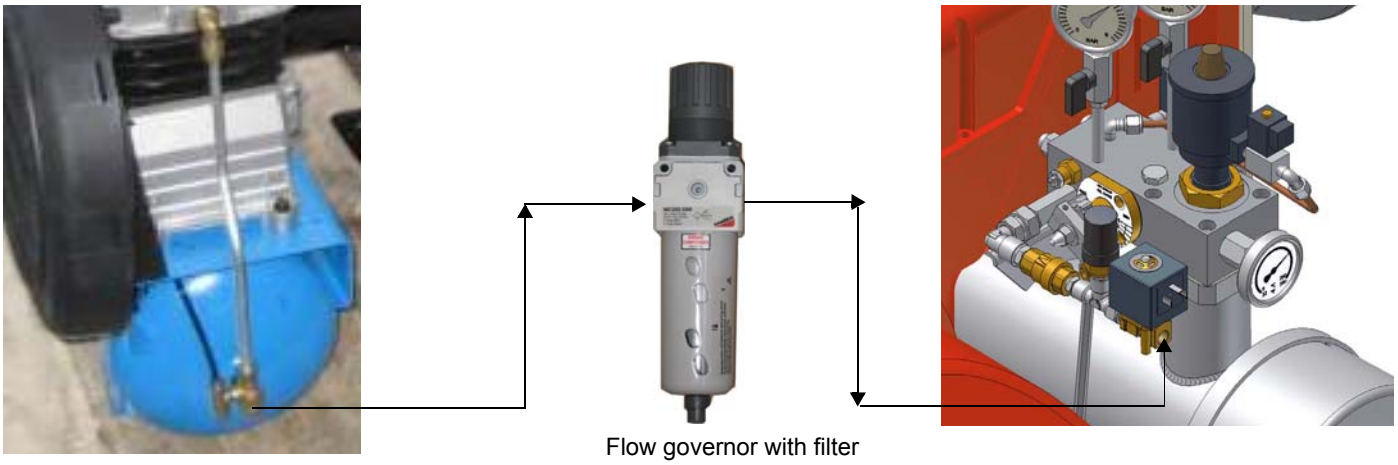

Flow governor with filter

### *Pilot gas train*

The connection to the pilot gas train must be done according to the following scheme, valid for LPG. In case of natural gas, connect the pressure goveror (pos. 3) to the natural gas line (maximum input pressure = 1 bar).

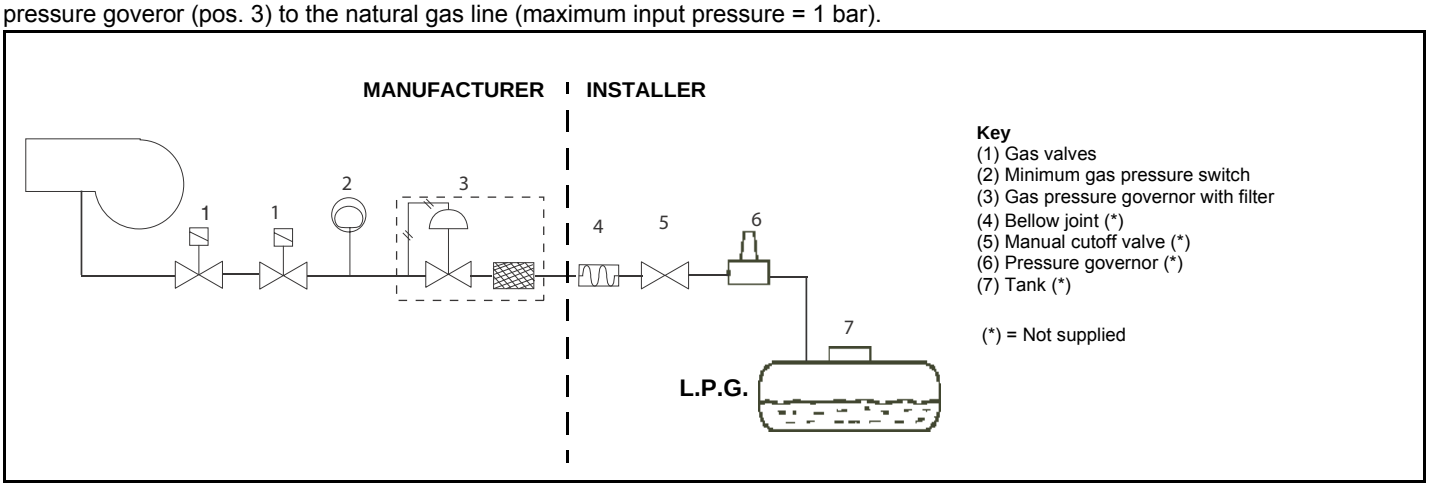


Fig. 7

The pilot gas train is already installed into the burner, the connection from the filter with stabiliser to the gas supply network must be carried out.

connection to the gas supply network - 1/2”

Once the gas train in installed, execute the electrical connections for all its items (gas valves group, pressure switch).

***ATTENTION: once the gas train is mounted according to the diagram on Fig. 7, the gas proving test mus be performed, according to the procedure set by the laws in force.***

## ELECTRICAL CONNECTIONS

***Respect the basic safety rules. make sure of the connection to the earthing system. do not reverse the phase and neutral connections. fit a differential thermal magnet switch adequate for connection to the mains.***

***ATTENTION: before executing the electrical connections, pay attention to turn the plant's switch to OFF and be sure that the burner's main switch is in 0 position (OFF) too. Read carefully the chapter "WARNINGS", and the "Electrical connections" section.***

***IMPORTANT: Connecting electrical supply wires to the burner teminal block MA, be sure that the ground wire is longer than phase and neutral ones.***

***WARNING: (only for double stage and progressive burners) The burner is provided with an electrical bridge between terminals 6 and 7; when connecting the high/low flame thermostat, remove this bridge before connecting the thermostat.***

To execute the electrical connections, proceed as follows:

1 remove the cover from the electrical board, unscrewing the fixing screws;
2 execute the electrical connections to the supply terminal board as shown in the attached wiring diagrams;
3 check the direction of the fan motor (see next paragraph);
4 refit the panel cover.

### *Note on elecrtical supply*

If the power supply to the burner is 230V three-phase or 230V phase-phase (without a neutral), with the Siemens control box, between the terminal 2 (terminal X3-04-4 in case of LMV2x, LMV3x, LMV5x, LME7x) on the board and the earth terminal, an RC Siemens RC466890660 filter must be inserted.

**Key**
C - Capacitor (22nF/250V)
LME / LMV - Siemens control box
R - Resistor (1Mohm)
M - Resistor (1Mohm)
M - Terminal 2 (LGB,LMC,LME), terminal X3-04-4 ( LMV2x, LMV3x, LMV5, LME7x)
RC466890660 - RC Siemens filter

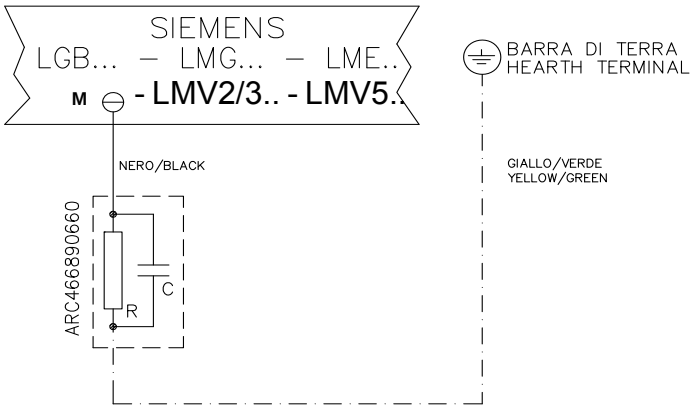


Fig. 8

### *Rotation of electric motor*

Once the electrical connection of the burner is executed, remember to check the rotation of the electric motor. The motor should rotate according to the “arrow” symbol on the body. In the event of wrong rotation, reverse the three-phase supply and check again the rotation of the motor.

***CAUTION: check the motor thermal cut-out adjustment***

**NOTE: the burners are supplied for three-phase 400V supply, and in the case of three-phase 230V supply it is necessary to modify the electrical connections into the terminal box of the electric motor and replace the overload tripped relay.**

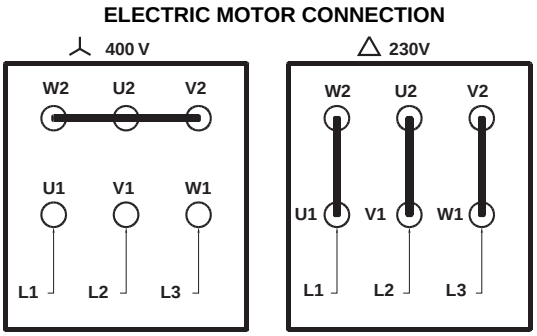


### *Connecting the oil heating resistors*

**2.4 - 4.5 kW**

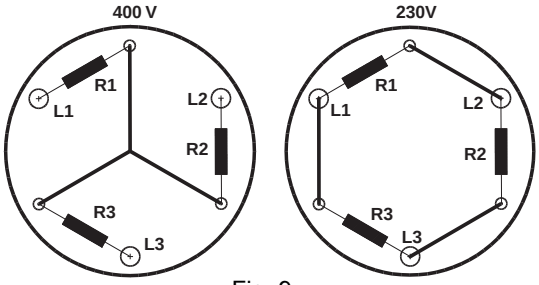


Fig. 9

**8 - 12 kW**

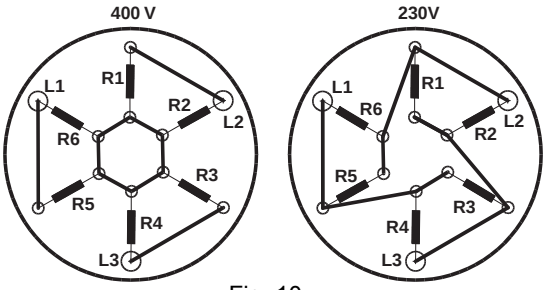


Fig. 10

**18 - 24 kW**

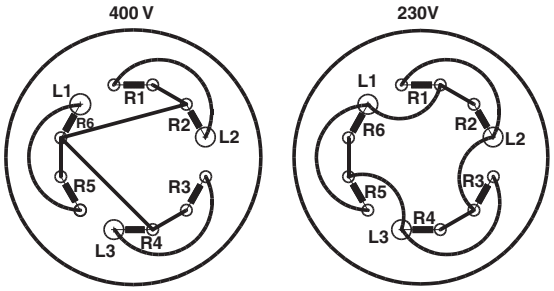


Fig. 11

### *Recommendations to design heavy oil feeding plants*

This paragraph is intended to give some suggestions to make feeding plants for heavy oil burners. To get a regular burner operation, it is very important to design the supplying system properly. Here some suggestions will be mentioned to give a brief description.

The term “heavy oil” is generic and summarises several chemical-physical properties, above all viscosity. The excessive viscosity makes the oil impossible to be pumped, so it must be heated to let it flow in the pipeline; because of the low-boiling hydrocarbons and dissolved gases, the oil must be also pressurised. The pressurisation is also necessary to feed the burner pump avoiding its cavitation because of the high suction at the inlet. The supplying system scope is to pump and heat oil.

The oil viscosity is referred in various unit measures; the most common are: °E, cSt, Saybolt and Redwood scales. Table 3 shows the-various unit convertions (e.g.: 132 cSt viscosity corresponds to 17.5°E viscosity).

The diagram in Fig. 12 shows how the heavy oil viscosity changes according to its temperature.

Example: an oil with 22°E viscosity at 50°C once heated to 100°C gets a 3 °E viscosity.

As far as the pumping capability, it depends on the type of the pump that pushes the oil even if on diagram in Fig. 12 a generic limit is quoted at about 100 °E, so it is recommended to refer to the specifications of the pump provided.

Usually the oil minimum temperature at the oil pump inlet increases as viscosity does, in order to make the oil easy to pump. Referring to the diagram on Fig. 13, it is possible to realise that to pump an oil with 50°E viscosity at 50°C, it must be heated at about 80°C.

### *Pipe heating system*

Pipe heating system must be provided, that is a system to heat pipes and plant components to mantain the viscosity in the pumping limits. Higher the oil viscosity and lower the ambient temperature, more necessary the pipe heating system.

### *Inlet minimum pressure of the pump (both for supplying system and burner)*

A very low pressure leads to cavitation (signalled by its peculiar noise): the pump manifacturer declares the minimum value. Therefore, check the pump technical sheets.

By increasing the oil temperature, also the minimum inlet pressure at the pump must increase, to avoid the gassification of the oil low-boiling products and the cavitation. The cavitation compromises the burner operation, it causes the pump to break too. The diagram on Fig. 14 roughly shows the inlet pump pressure according to the oil temperature.

### *Pump operating maximum pressure (both for the supplying system and burner)*

Remember that pumps and all the system components through which the oil circulates, feature an upper limit. Always read the technical documentation for each component. Schemes on Fig. 15 are taken from UNI 9248 "liquid fuel feeding lines from tank to burner" standard and show how a feeding line should be designed. For other countries, see related laws in force. The pipe dimensioning, the execution and the winding dimensioning and other construcitve details must be provided by the installer.

### *Adjusting the supplying oil ring*

According to the heavy oil viscosity used, in the table below indicative temperature and pressure values to be set are shown.

**Note:** the temperature and pressure range allowed by the supplying ring components must be checked in the specifications table of the components themselves.

| HEAVY OIL VISCOSITY AT 50 °C | | PIPELINE PRESSURE | PIPELINE TEMPERATURE |
|---|---|---|---|
| cSt (°E) | | bar | °C |
| | < 50 (7) | 1- 2 | 20 |
| > 50 (7) | < 110 (15) | 1- 2 | 50 |
| > 110 (15) | < 400 (50) | 1- 2 | 65 |
| > 400 (50) | < 4000 (530) | 1- 2 | 100 |

Tab. 1 - Supply pipeline hydraulic scheme 3ID0024, pump n.4

**ATTENTION: Atomizing air pressure is tipically set at 1 bar lower than oil pressure.**

**Viscosity units conversion table**

| Cinematics viscosity Centistokes (cSt) | Engler Degrees (°E) | Saybolt Seconds Universal (SSU) | Saybolt Seconds Furol (SSF) | Redwood Seconds no.1 (Standard) | Redwood Seconds no..2 (Admiralty) |
|---|---|---|---|---|---|
| 1 | 1 | 31 | -- | 29 | -- |
| 2.56 | 1.16 | 35 | -- | 32.1 | -- |
| 4.3 | 1.31 | 40 | -- | 36.2 | 5.1 |
| 7.4 | 1.58 | 50 | -- | 44.3 | 5.83 |
| 10.3 | 1.88 | 60 | -- | 52.3 | 6.77 |
| 13.1 | 2.17 | 70 | 12.95 | 60.9 | 7.6 |
| 15.7 | 2.45 | 80 | 13.7 | 69.2 | 8.44 |
| 18.2 | 2.73 | 90 | 14.44 | 77.6 | 9.3 |
| 20.6 | 3.02 | 100 | 15.24 | 85.6 | 10.12 |
| 32.1 | 4.48 | 150 | 19.3 | 128 | 14.48 |
| 43.2 | 5.92 | 200 | 23.5 | 170 | 18.9 |
| 54 | 7.35 | 250 | 28 | 212 | 23.45 |
| 65 | 8.79 | 300 | 32.5 | 254 | 28 |
| 87.6 | 11.7 | 400 | 41.9 | 338 | 37.1 |
| 110 | 14.6 | 500 | 51.6 | 423 | 46.2 |
| 132 | 17.5 | 600 | 61.4 | 508 | 55.4 |
| 154 | 20.45 | 700 | 71.1 | 592 | 64.6 |
| 176 | 23.35 | 800 | 81 | 677 | 73.8 |
| 198 | 26.3 | 900 | 91 | 762 | 83 |
| 220 | 29.2 | 1000 | 100.7 | 896 | 92.1 |
| 330 | 43.8 | 1500 | 150 | 1270 | 138.2 |
| 440 | 58.4 | 2000 | 200 | 1690 | 184.2 |
| 550 | 73 | 2500 | 250 | 2120 | 230 |
| 660 | 87.6 | 3000 | 300 | 2540 | 276 |
| 880 | 117 | 4000 | 400 | 3380 | 368 |
| 1100 | 146 | 5000 | 500 | 4230 | 461 |
| 1320 | 175 | 6000 | 600 | 5080 | 553 |
| 1540 | 204.5 | 7000 | 700 | 5920 | 645 |
| 1760 | 233.5 | 8000 | 800 | 6770 | 737 |
| 1980 | 263 | 9000 | 900 | 7620 | 829 |
| 2200 | 292 | 10000 | 1000 | 8460 | 921 |
| 3300 | 438 | 15000 | 1500 | 13700 | -- |
| 4400 | 584 | 20000 | 2000 | 18400 | -- |

Tab. 2

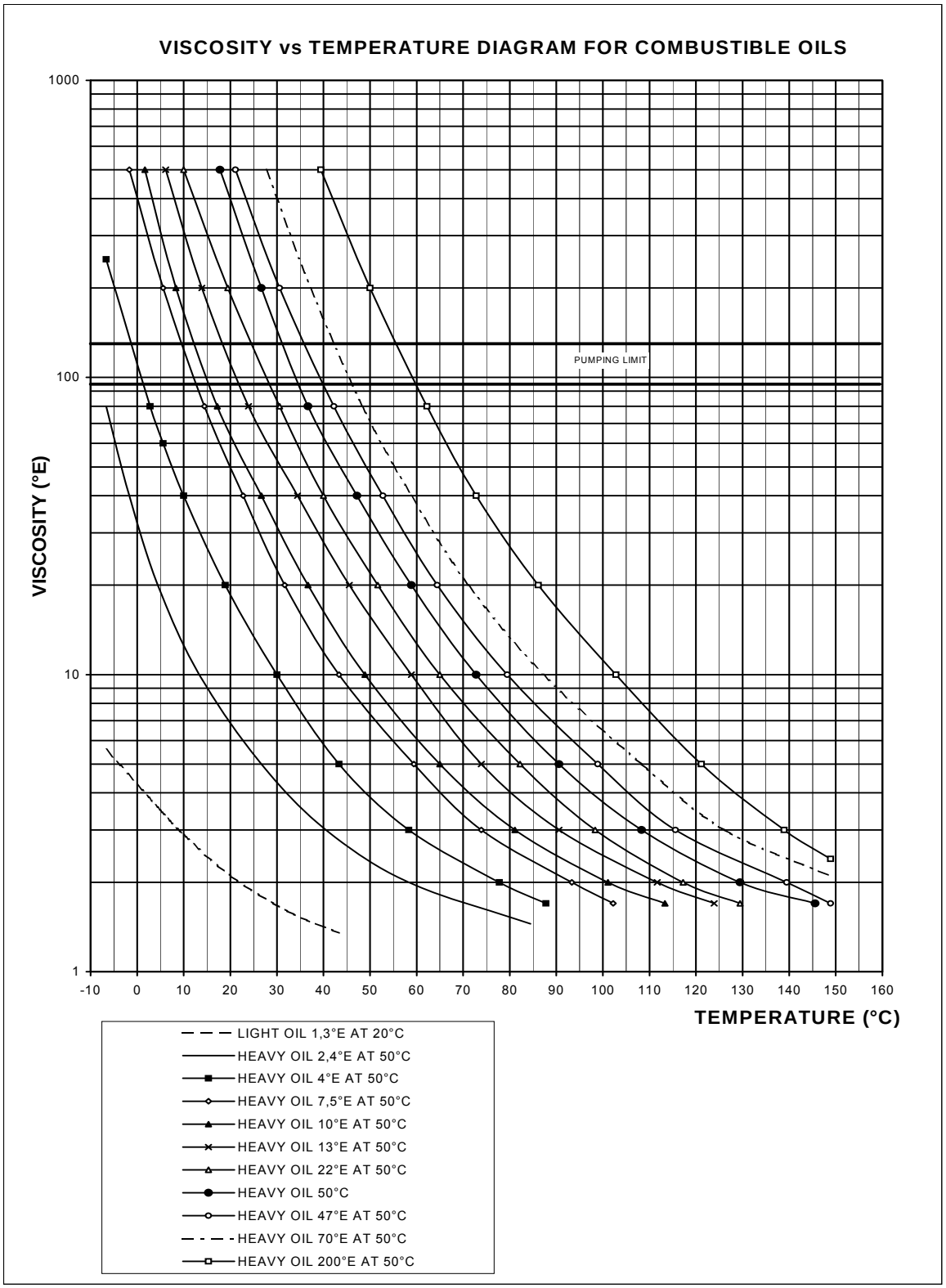
VISCOSITY vs TEMPERATURE DIAGRAM FOR COMBUSTIBLE OILS
VISCOSITY (°E)
1000
100
10
1
PUMPING LIMIT
-10
0
10
20
30
40
50
60
70
80
90
100
110
120
130
140
150
160
TEMPERATURE (°C)
LIGHT OIL 1,3°E AT 20°C
HEAVY OIL 2,4°E AT 50°C
HEAVY OIL 4°E AT 50°C
HEAVY OIL 7,5°E AT 50°C
HEAVY OIL 10°E AT 50°C
HEAVY OIL 13°E AT 50°C
HEAVY OIL 22°E AT 50°C
HEAVY OIL 50°C
HEAVY OIL 47°E AT 50°C
HEAVY OIL 70°E AT 50°C
HEAVY OIL 200°E AT 50°C

Fig. 12

**Indicative diagram showing the oil temperature at burner pump inlet vs. oil viscosity**

Example: if the oil has a 50°E @ 50°C viscosity, the oil temperature at the pump inlet should be 80°C (see diagram).

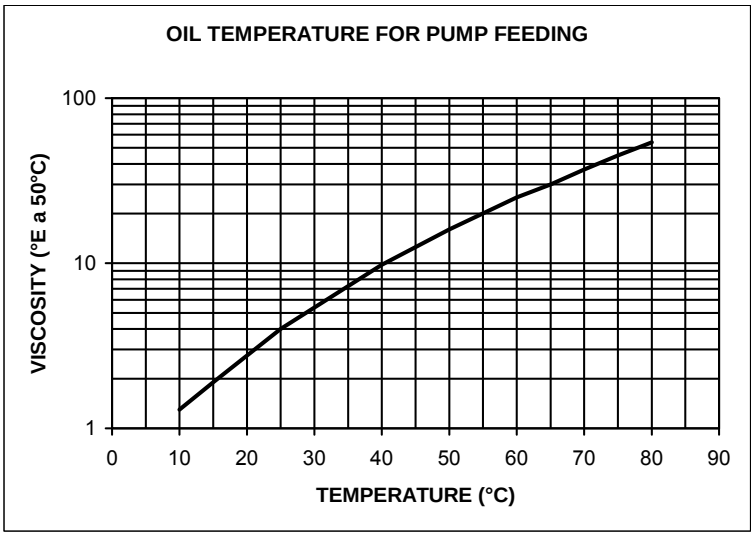


Fig. 13

**Indicative diagram showing the oil pressure according to its temperature**

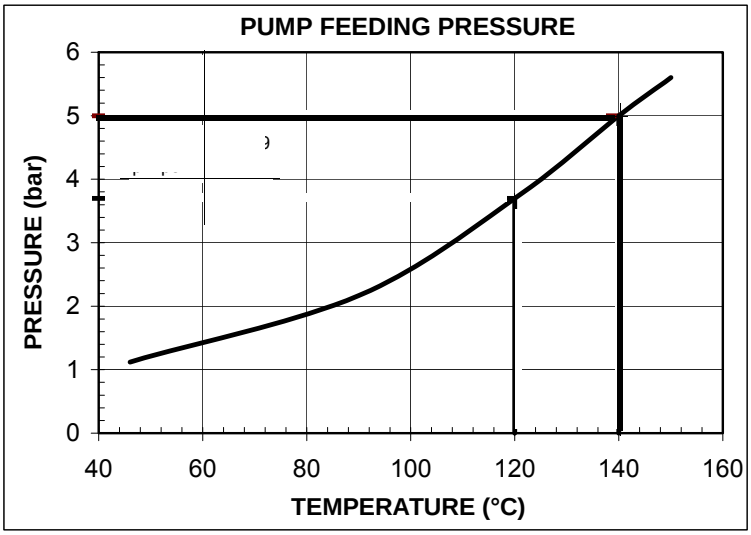


Fig. 14

Fig. 15 - **Hydraulic diagram 3ID0024**

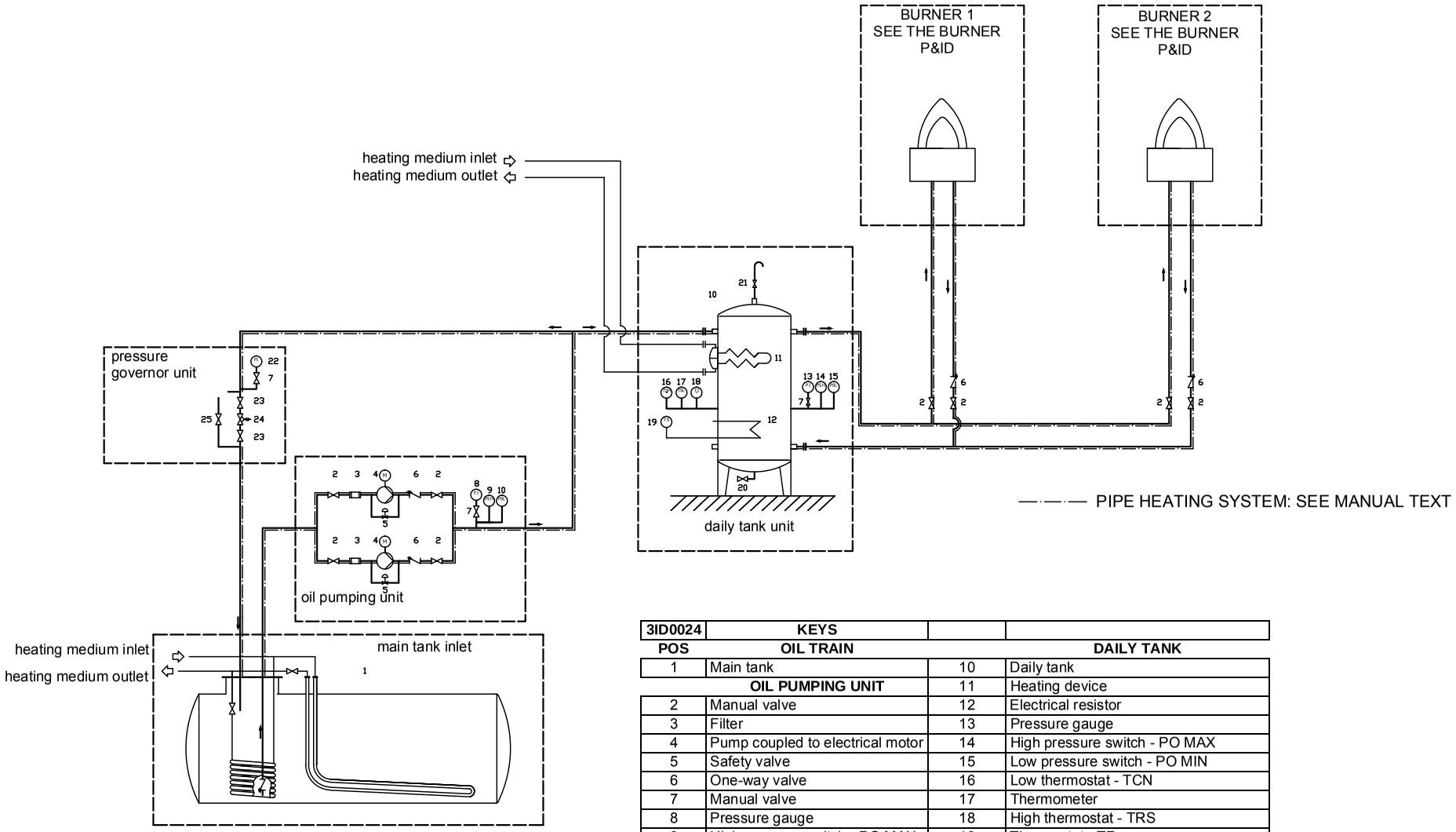


| 3ID0024 | KEYS | | |
|---|---|---|---|
| **POS** | **OIL TRAIN** | | **DAILY TANK** |
| 1 | Main tank | 10 | Daily tank |
| | **OIL PUMPING UNIT** | 11 | Heating device |
| 2 | Manual valve | 12 | Electrical resistor |
| 3 | Filter | 13 | Pressure gauge |
| 4 | Pump coupled to electrical motor | 14 | High pressure switch - PO MAX |
| 5 | Safety valve | 15 | Low pressure switch - PO MIN |
| 6 | One-way valve | 16 | Low thermostat - TCN |
| 7 | Manual valve | 17 | Thermometer |
| 8 | Pressure gauge | 18 | High thermostat - TRS |
| 9 | High pressure switch - PO MAX | 19 | Thermostat - TR |
| | | 20 | Manual valve |
| | | 21 | Manual valve |
| | | | **PRESSURE GOVERNOR UNIT** |
| | | 22 | Pressure gauge |
| | | 23 | Manual valve |
| | | 24 | Pressure governor |
| | | 25 | Needle valve |

## LIMITATIONS OF USE

THE BURNER IS AN APPLIANCE DESIGNED AND CONSTRUCTED TO OPERATE ONLY AFTER BEING CORRECTLY CONNECTED TO A HEAT GENERATOR (E.G. BOILER, HOT AIR GENERATOR, FURNACE, ETC.), ANY OTHER USE IS TO BE CONSIDERED IMPROPER AND THEREFORE DANGEROUS.

THE USER MUST GUARANTEE THE CORRECT FITTING OF THE APPLIANCE, ENTRUSTING THE INSTALLATION OF IT TO QUALIFIED PERSONNEL AND HAVING THE FIRST COMMISSIONING OF IT CARRIED OUT BY A SERVICE CENTRE AUTHORISED BY THE COMPANY MANUFACTURING THE BURNER.

A FUNDAMENTAL FACTOR IN THIS RESPECT IS THE ELECTRICAL CONNECTION TO THE GENERATOR'S CONTROL AND SAFETY UNITS (CONTROL THERMOSTAT, SAFETY, ETC.) WHICH GUARANTEES CORRECT AND SAFE FUNCTIONING OF THE BURNER.

THEREFORE, ANY OPERATION OF THE APPLIANCE MUST BE PREVENTED WHICH DEPARTS FROM THE INSTALLATION OPERATIONS OR WHICH HAPPENS AFTER TOTAL OR PARTIAL TAMPERING WITH THESE (E.G. DISCONNECTION, EVEN PARTIAL, OF THE ELECTRICAL LEADS, OPENING THE GENERATOR DOOR, DISMANTLING OF PART OF THE BURNER).

NEVER OPEN OR DISMANTLE ANY COMPONENT OF THE MACHINE EXCEPT FOR ITS MAINTENANCE.

TO SECURE THE MACHINE, ACT ON THE ISOLATOR SWITCH. IN CASE OF ANOMALIES THAT REQUIRED A SHUT DOWN OF THE BURNER, IT'S POSSIBLE TO ACT ON THE AUXILIARY LINE SWITCH, LOCATED ON THE BURNER FRONT PANEL.

IN CASE OF A BURNER SHUT-DOWN, RESET THE CONTROL BOX BY MEANS OF THE RESET PUSHBUTTON. IF A SECOND SHUT-DOWN TAKES PLACE, CALL THE TECHNICAL SERVICE, WITHOUT TRYING TO RESET FURTHER.

WARNING: DURING NORMAL OPERATION THE PARTS OF THE BURNER NEAREST TO THE GENERATOR (COUPLING FLANGE) CAN BECOME VERY HOT, AVOID TOUCHING THEM SO AS NOT TO GET BURNT.

## *Control panel*

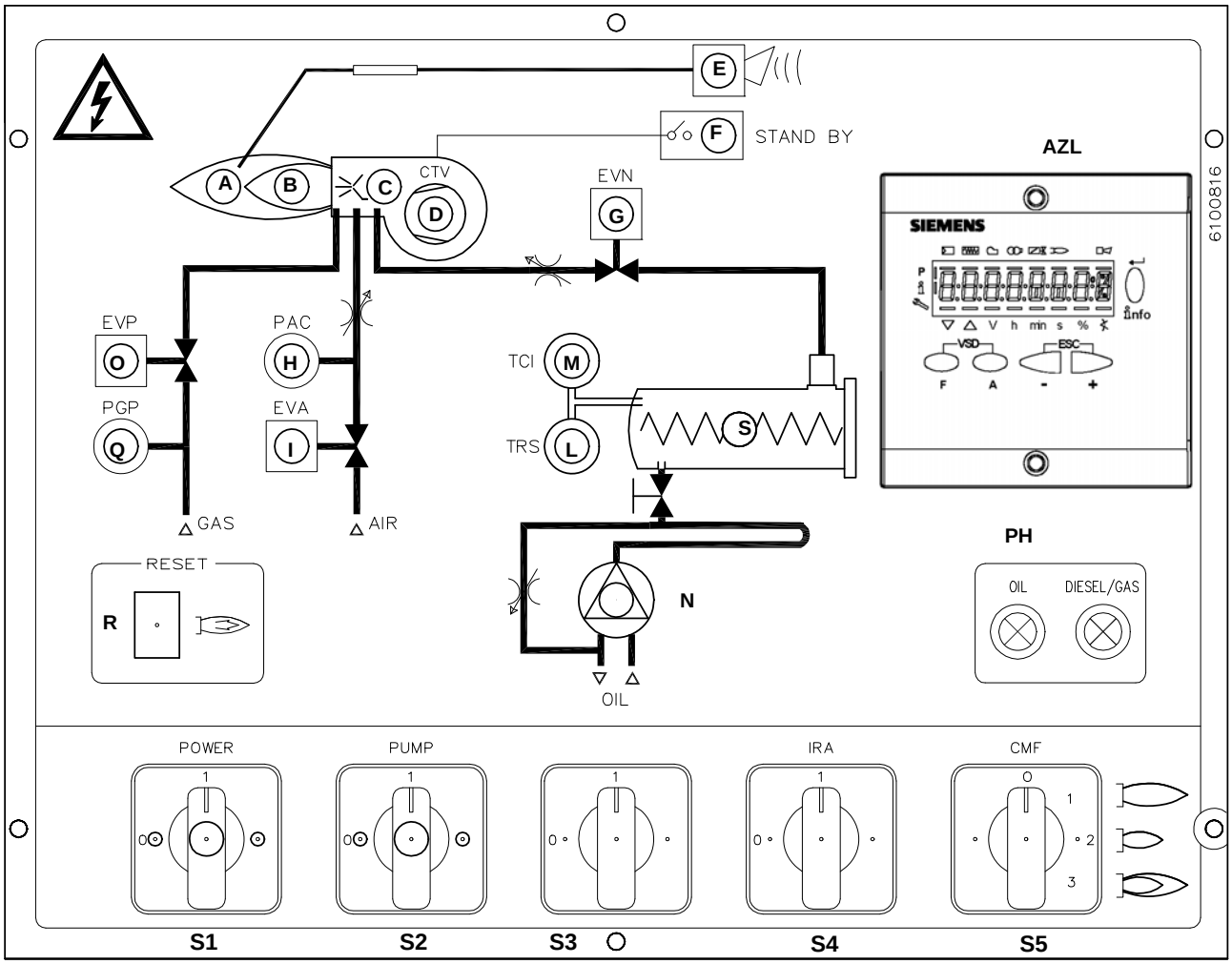


| | |
|---|---|
| A | High flame lamp |
| B | Low flame lamp |
| C | Ignition transformer lamp |
| D | Fan motor thermal cutout lamp |
| E | Burner lockout lamp |
| F | Burner stand-by lamp |
| G | Solenoid valve lamp |
| H | Compressed air pressure switch lamp |
| I | Compressed air solenoid valve lamp |
| L | Heating resistors safety thermostat lamp |
| M | Plant enabling thermostat lamp |
| AZL | Siemens output controller |
| N | Oil pump in operation |
| O | Pilot solenoid valve lamp |
| PH | Heavy oil operation lamp |
| Q | Pilot gas pressure switch |
| R | Reset pushbutton for control box |
| S | Pre-heater in operation lamp |
| S1 | Main switch |
| S2 | Pump operation selector “MAN-AUTO” |
| S3 | Fuel operation selector |
| S4 | Auxiliary resistors switch |
| S5 | Operation mode manual selector |

## ADJUSTMENT FOR OIL OPERATIONS

**Before starting up the burner, make sure that the return pipe to the tank is not obstructed. Any obstruction would cause the pump seal to break.**

***ATTENTION:*** **before starting the burner up, be sure that the manual cutoff valves are open. Be sure that the mains switch is closed.**

The figure below shows nozzle flow valve. Before turn on the burner, open the manual valve.

### *Air vent*

Before to give tension to the eletrical resistance, release the air inside the heaters throught the SA connection acting on the T cap.

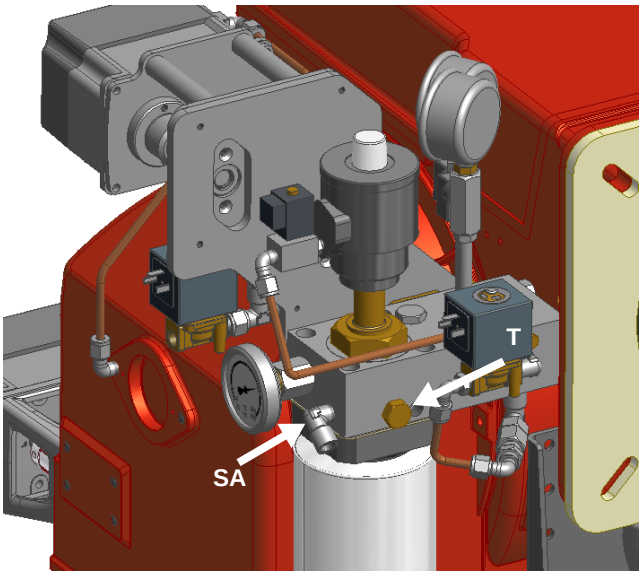


### *Oil Flow Rate Settings*

The light oil flow rate can be adjusted choosing a nozzle that suits the boiler/utilisation output and setting the delivery and return pressure values according to the ones quoted on the following table.

| VISCOSITY AT 50 °C | | OIL PRESSURE AFTER BURNER PUMP | | OIL PRESSURE AFTER OIL METERING VALVE | |
|---|---|---|---|---|---|
| | | min | max | min | max |
| °cSt (°E) | | bar | | °C | |
| | < 50 (7) | 6 | 10 | 1 | 2 |
| > 50 (7) | < 110 (15) | 6 | 10 | 1 | 2 |
| > 110 (15) | < 400 (50) | 6 | 10 | 1 | 2 |
| > 400 (50) | <4000 (530) | 6 | 10 | 1 | 2 |

Tab. 3

The pressure values shown in the table are intended as working range. In order to obtain a more accurate indication, please refer to the nozzle pressure-flow diagrams.

### *Compressed air adjustment*

***ATTENTION: set the pressure value about 1 bar, at the pressure gauge 47 (see Fig. 17). check it before open valve 16!***

To start the burner set the oil and atomisation medium pressure at about 1 bar, as first trial. then, regulate the burner checking the combustion values at the chimney, according to the paragraph "operation", and adjust the starting point according to the regulation.

Fig. 16

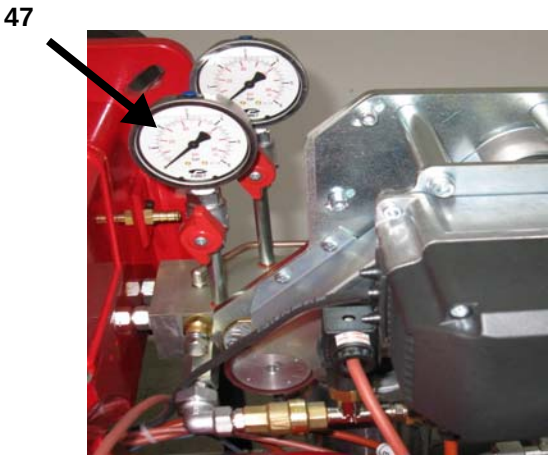


Fig. 17

***ATTENTION: set the pressure value about 5-10 bar, at the pressure gauge on the governor 40 (see hydraulic diagram and Fig. 2)***

### *Air valve for gun cleaning*

As the flame is off, the purge valve 52 opens automatically the compressed air to clean the gun. With this operation, the oil between the valves and the nozzle is drained. The air pressure value for the gun cleaning must be setted to the pressure value of the atomization medium, regulated in low flame (generally 1 bar), and should be adjusted throught the item 50. (see hydraulic diagram of the burner)

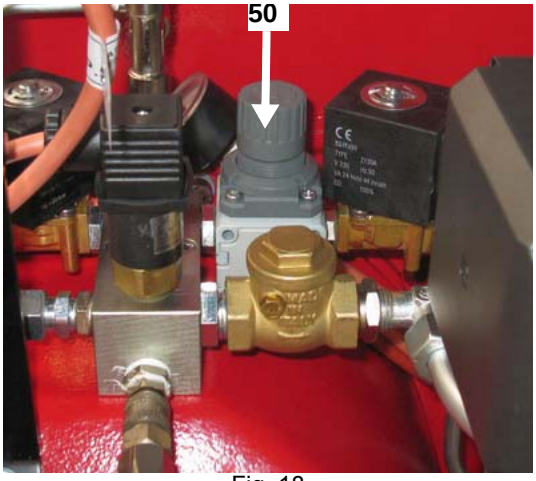


Fig. 18

### *Oil Flow Rate Settings actuator*

1 Turn the burner on by means of the main switch on the burner control panel (see chapter “Operation”);

2 with the electrical panel open, prime the oil pump acting directly on the related contactor **CP** (see next picture): check the pump motor rotation and keep pressing for some seconds until the oil circuit is charged;

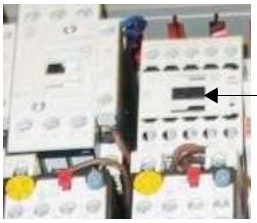


3 bleed the air from the **SA** port by loosing the cap **T** without removing it, then release the contactor and fasten cap **T**.

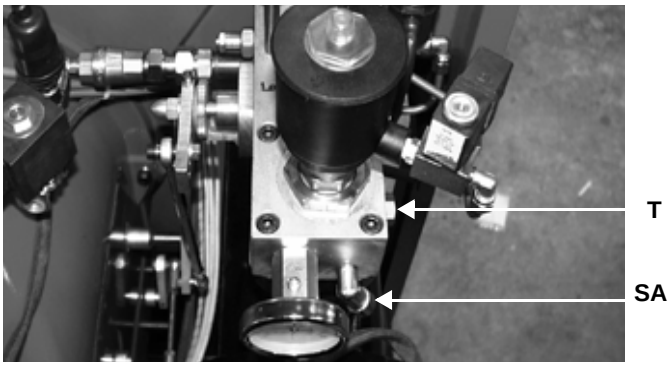


4 As for setting the fuel/air ratio curve, see the LMV2x/3x related manual.

5 The nozzle supply pressure is already factory-set and must not be changed. Only if necessary, adjust the supply pressure as follows (see related paragraph); read the pressure on the oil pressure gauge on picture below and act on the Suntec TV governor adjusting screw VR (see picture below and description on page 20) as to get the nozzle pressure at 2bar (see step 8). If the required flow rate is not reached, increase the feeding pressure by means of the Suntec TV governor (see picture below); if it is too high, reduce it.

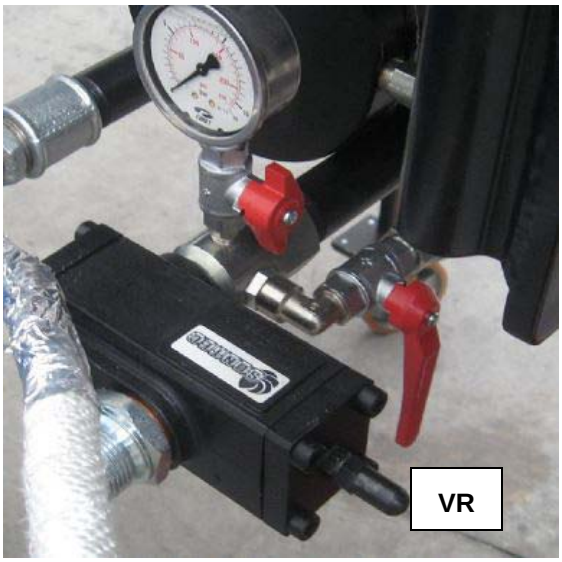


6 Set the atomisation air according to the data in the nozze diagram attached, by means of the RB knob (see picture).

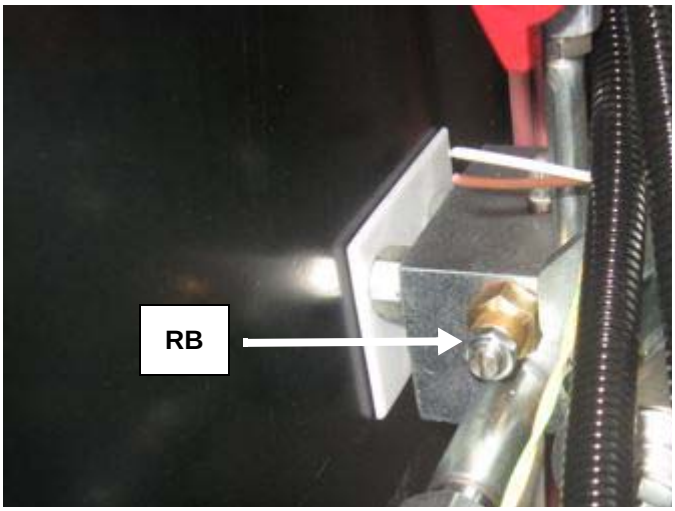


7 If necessary, change the combustion head position: to let the burner operate at a lower output, move progressively back the combustion head towards the MIN position, by turning clockwise the **VRT** ring nut. The graduated index **ID** shows the combustion head shifting (each mark refers to 5mm).

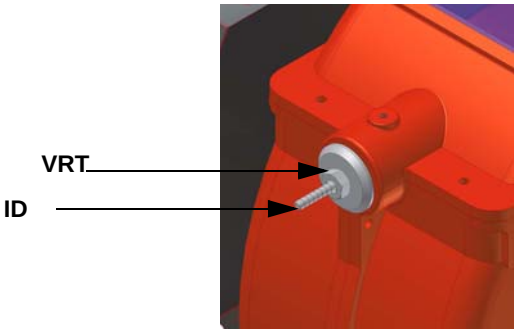

”MAX” position

”MIN” position

**Attention!** if it is necessary to change the head position, repeat the air and gas adjustments described above.

Turn the burner off; then start it up again. If the adjustment is not correct, repeat the previous steps.

### *Calibration of air pressure switch*

To calibrate the air pressure switch, proceed as follows:

- Remove the transparent plastic cap.
- Once air and heavy oil setting have been accomplished, startup the burner.
- During the pre-purge phase o the operation, turn slowly the adjusting ring nut **VR** in the clockwise direction until the burner lockout, then read the value on the pressure switch scale and set it to a value reduced by 15%.
- Repeat the ignition cycle of the burner and check it runs properly.
- Refit the transparent plastic cover on the pressure switch.

### *Fully-modulating burners*

To adjust the fully-modulating burners, use the **CMF** switch on the burner control panel (see next picture), instead of the **TAB** thermostat as described on the previous paragraphs about the progressive burners. Go on adjusting the burner as described before, paying attention to use the CMF switch intead of **TAB**.

The **CMF** position sets the oprating stages: to drive the burner to the high-flame stage, set CMF=1; to drive it to the low-flame stage, set CMF=2.

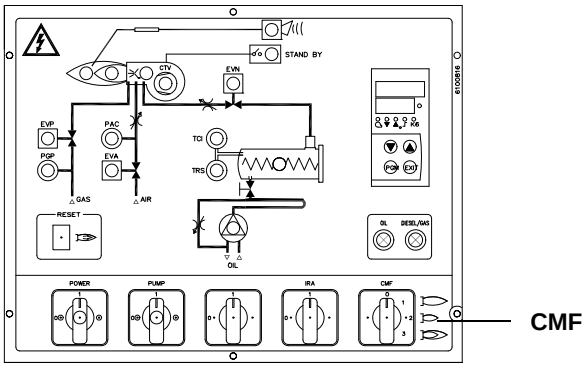


CMF = 0 stop at the current position
CMF = 1 high flame operation
CMF = 2 low flame operation
CMF = 3 automatic operation

### *Oil thermostat adjustment*

Progressive and fully modulanting oil burners are equipped with electronic multi-thermostat Danfoss MCX, whose operation is controlled by thyristor. (for details refer to the attached technical documentation)

Fig. 19 - Danfoss MCX

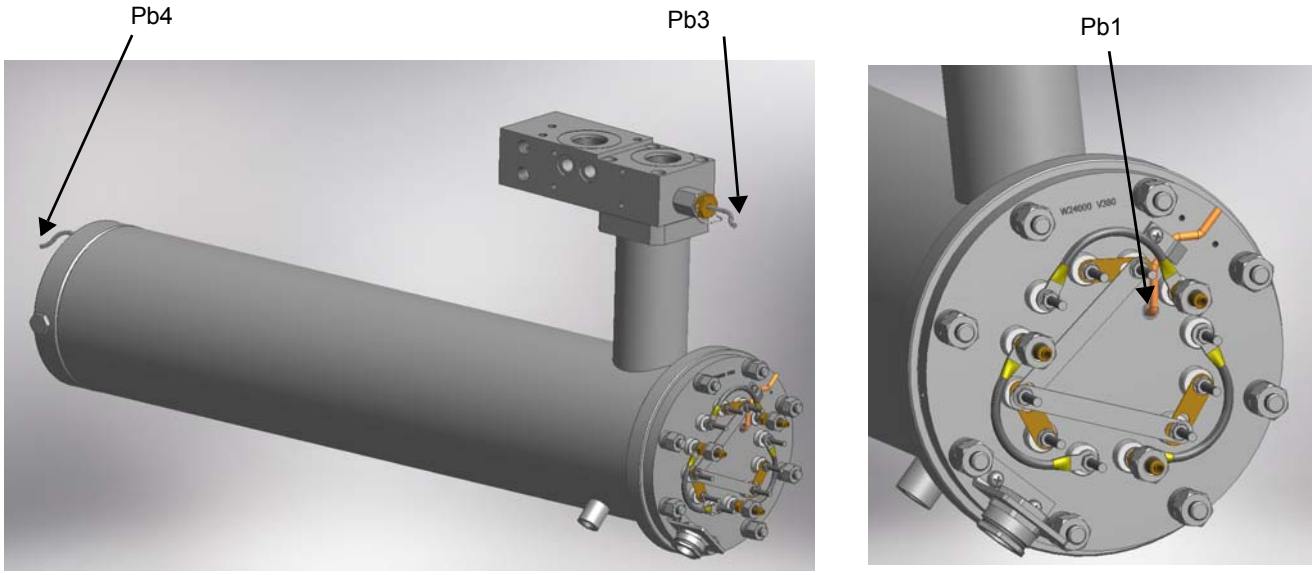


Fig. 20 - Probe connections (Danfoss MCX)

| Menu path | | | | Oil viscosity at 50 °C according to the letter shown in the burner model | | | | |
|---|---|---|---|---|---|---|---|---|
| | | | | **P** | **N** | **E** | **D** | **H** |
| | | | | 89 cSt | < 50 cSt | > 50 cSt<br>< 110 cSt | > 110 cSt<br>< 400 cSt | > 400 cSt<br>< 4000 cSt |
| | | | | 12 °E | < 7°E | > 7 °E<br>< 15 °E | > 15 °E<br>< 50 °E | > 50 °E<br>< 530 °E |
| Par | | | | | | | | |
| rEG | Pb1 | tr | Oil heater temperature probe | parameter not visible | | | | |
| | Pb2 | tCI | Plant consent temperature probe (when installed) | 20 °C | 70 °C | 70 °C | 70 °C | --- |
| | Pb3 | Oil | oil heater output temperature probe (PID regulation); | 60-70 °C | 110-120 °C | 120-130 °C | 130-140 °C | 140-150 °C |
| | | SP0 | Set-point oil heater with oil pump stopped (stand-by) | 45 °C | 120 °C | 130 °C | 140 °C | 150 °C |
| | Pb4 | tcn | Oil heater consent temperature probe | 40 °C | 100 °C | 100 °C | 110 °C | 120 °C |
| | | trS | Safety temperature tank resistors (manual reset) | 120 °C | 190-200 °C | 190-200 °C | 190-200 °C | 190-200 °C |

The oil viscosity at the nozzle, should be about 1,5 °E, which guarantees correct and safe functioning of the burner. The above temperature values are suggested and refer to a plant designed according to the prescriptions in the burner user manual.The suggested values can change in reference to the fuel oil specifications.

## *Adjusting the pilot gas flow rate: gas valve Brahma EG12xR and pressure governor*

To change the pilot gas valve flow rate, proceed as follows:

1 remove the protection on the bottom of the valve, moving it counterclockwise (see next picture);

2 rotate clockwise the nut 1 as shown in to close the valve or counterclockwise to open.

To perform gas pressure adjustment, act on the pressure governor as follows (see next picture):

3 remove the cap **T**: to increase the gas pressure at the outlet use a screwdriver on the screw **TR** as shown in the next picture. Screw to increase the pressure, unscrew to decrease; once the regulation is performed, replace cap **T**.

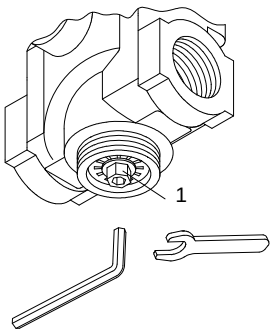


**Brahma gas valve EGRx12**

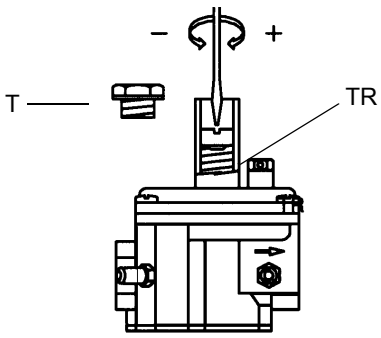


***Gas pressure governor***

## ADJUSTING AIR AND FUEL RATE

### *Adjustments - brief description*

The air and fuel rates adjustments must be performed at the maximum ouptput first ("high flame"): see the LMV related manual.

- Check that the combustion parameters are in the suggested limits.
- Check the flow rate measuring it on the counter or, if it was not possible, verifying the combustion head pressure by means of a differential pressure gauge, as described on par. "Measuring the gas pressure in the combustion head".
- Then, adjust the combustion values by setting the "gas/air" ratio" curvepoints (see the LMV related manual).
- Set, now, the low flame output (according to the procedure described on the "Siemens LMV manual") in order to avoid the low flame output increasing too much or that the flues temperature gets too low to cause condensation in the chimney.

⚠ ***.ATTENTION:*** **During commissioning operations, do not let the burner operate with insufficient air flow (danger of formation of carbon monoxide); if this should happen, make the fuel decrease slowly until the normal combustion values are achieved.**

⚠ **IMPORTANT! the combustion air excess must be adjusted according to the values in the following chart.**

| Recommended combustion parameters | | |
|---|---|---|
| ***Fuel*** | ***Recommended (%) $CO_2$*** | ***Recommended (%) $O_2$*** |
| Heavy oil | 11 ÷ 12 | 4.2 ÷ 6.2 |

### *User interface*

The AZL2x.. display is shown below:
The keys functions are the following:

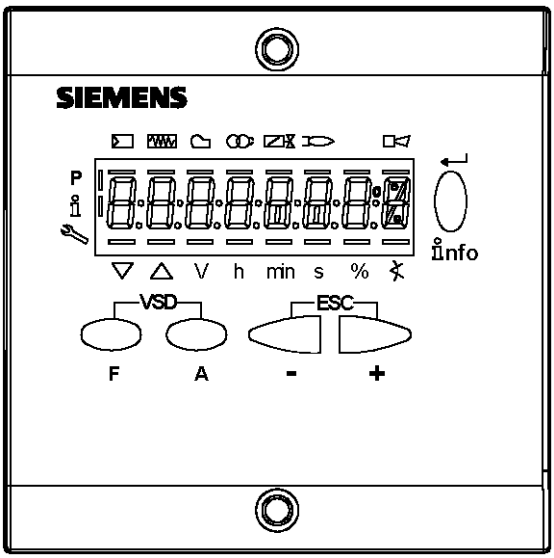

**Key F**
Used to adjust the "fuel" actuator position (**F**uel): :
While pressing the **F** key, the "fuel" actuator position can be changed by means of the **+** and **-** keys.

**Key A**
Used to adjust the "air" actuator position (**A**ir):
While pressing the **A** key, the "air" actuator position can be changed by means of the **+** and **-** keys.

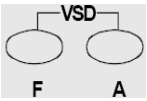


**Key F + A**
While pressing the two keys contemporarly, the **code** message will appear: by entering the proper password it is possible to access the **Service** mode.

**Info and Enter keys**
Used for **Info** and **Service** menues
Used as **Enter** key in the setting modes
Used as **Reset** key in the burner operation mode
Used to enter a lower level menu

**-Key -**
Used to decrease a a value
Used to enter Info and Serivce during the curve adjustments

**+Key +**
Used to increase a a value
Used to enter Info and Serivce during the curve adjustments

**Keys (+ & - )= ESC**
By pressing + and - at the same time, the ESCAPE function is perfomed:

to enter a lower level menu

The display will show these data:

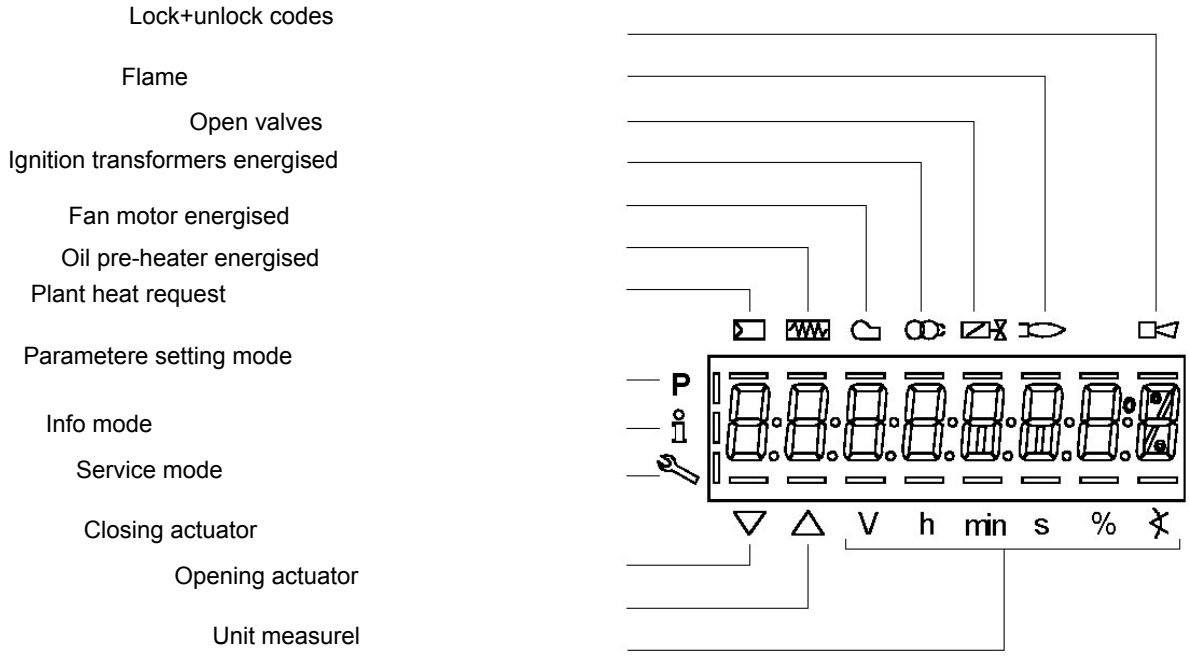


The display will show these data:

### *Setting menu*

The setting menu is divided into different blocks:

| Bloc. | Descrizione | Description | Password |
|---|---|---|---|
| 100 | Informazioni generali | General | OEM / Service / Info |
| 200 | Controllo bruciatore | Burner control | OEM / Service |
| 400 | Curve rapporto | Ratio curves | OEM / Service |
| 500 | Controllo rapporto | Ratio control | OEM / Service |
| 600 | Servocomandi | Actuators | OEM / Service |
| 700 | Storico errori | Error history | OEM / Service / Info |
| 900 | Dati di processo | Process data | OEM / Service / Info |

The accesses to the various blocks are allowed by passwords. Passwords are divided into three levels:

- User level (info): no password needed
- Service level (Service)
- Manifacturer level (OEM)

**PHASES LIST**

During operation, the following program phases are shown. The meaning for each phase is quoted in the table below

| Fase /Phase | Funzione | Function |
|---|---|---|
| Ph00 | Fase blocco | Lockout phase |
| Ph01 | Fase di sicurezza | Safety phase |
| Ph10 | t10 = tempo raggiungimento posizione riposo | t10 = home run |
| Ph12 | Pausa | Standby (stationary) |
| Ph22 | t22 = tempo di salita ventilatore (motore ventilatore = ON, valvola intercettazione di sicurezza = ON) | t22 = fan ramp up time (fan motor = ON, safety shutoff valve = ON) |
| Ph24 | Verso posizione preventilazione | Traveling to the prepurge position |
| Ph30 | t1 = tempo preventilazione | t1 = prepurge time |
| Ph36 | Verso posizione accensione | Traveling to the ignition position |
| Ph38 | t3 = tempo preaccensione | t3 = preignition time |
| Ph40 | TSA1 = primo tempo sicurezza (trasformatore accensione ON) | TSA1= 1st safety time (ignition transformer ON) |
| Ph42 | TSA1 = primo tempo sicurezza (trasformatore accensione OFF) | TSA1 = 1st safety time (ignition transformer OFF)<br>t42 = preignition time OFF |
| Ph44 | t44 = intervallo 1 | t44 = interval 1 |
| Ph50 | TSA2 = secondo tempo sicurezza | TSA2 = 2nd safety time |
| Ph52 | t52 = intervallo 2 | t52 = interval 2 |
| Ph60 | Funzionamento 1 (stazionario) | Operation 1 (stationary) |
| Ph62 | t62 = massimo tempo bassa fiamma (funzionamento 2, in preparazione per spegnimento, verso bassa fiamma) | t62 = max. time low-fire (operation 2, preparing for shutdown, traveling to low-fire) |
| Ph70 | t13 = tempo postcombustione | t13 = afterburn time |
| Ph72 | Verso posizione postcombustione | Traveling to the postpurge position |
| Ph74 | t8 = tempo postventilazione | t8 = postpurge time |
| Ph80 | t80 = tempo evacuazione controllo tenuta valvole | t80 = valve proving test evacuation time |
| Ph81 | t81 = tempo perdita pressione atmosferica, prova atmosferica | t81 = leakage time test time atmospheric pressure, atmospheric test |
| Ph82 | t82 = test perdita, test riempimento | t82 = leakage test filling test, filling |
| Ph83 | t83 = tempo perdita pressione gas, test pressione | t83 = leakage test time gas pressure, pres sure test |
| Ph90 | Tempo attesa “mancanza gas” | Gas shortage waiting time |

### *Entering the Parameter levels*

By means of a proper use of the keys, it is possible to enter the various level parameters, as shown in the following flow chart:

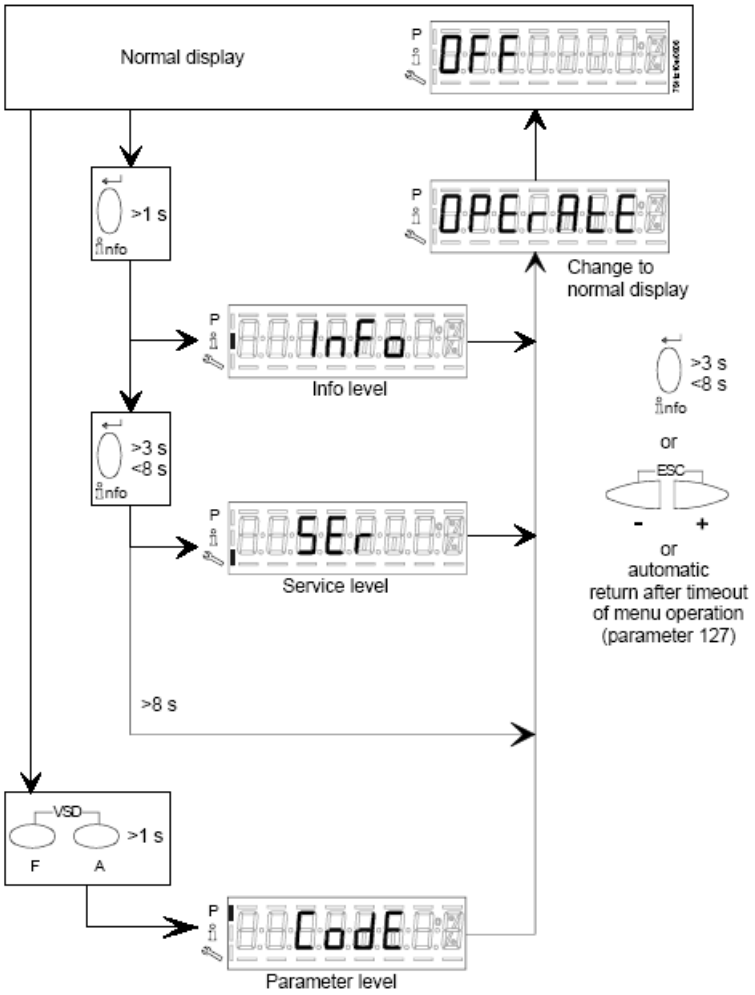


The burner and consequently the LMV2x.. are factory set; the air and fuel curves as set as well.

### *Info level*

To enter the **Info** level, proceed as follows:

1 in any menu position, press keys **+** and **-** at the same time, then the program will start again: the display will show **OFF**.

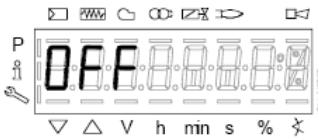


2 until the display will show **InFo**, Press the **enter (InFo)** key

3 then il will show the first code (167) flashing, on the right side it will show the data entered. By pressing **+** or **-** it is possible to scroll (up or down) the parameter list.

4 If a dot-line is shown on the right, there is no enough room for complete visualisation: press **enter** again the data will be completely shown for 1 to 3 seconds. By pressing **enter** or **+** and**-** at the same time, the system will exit the parameter visualisation and go back to the flashing number.

The **Info** level shows some basic parameters as:

| ***Parameter*** | ***Description*** |
|---|---|
| 167 | Cubic meters of fule (resettable) |
| 162 | Operating hours (resettable) |
| 163 | Device operating hours |
| 164 | Burners start-ups (resettable) |
| 166 | Total number of start-ups |
| 113 | Burner number (i.e. serial number) |
| 107 | Software version |
| 102 | Software date |
| 103 | Device serial number |
| 104 | Customer code |
| 105 | Version |
| 143 | Free |

5 Example: choose parameter 102 to show the date

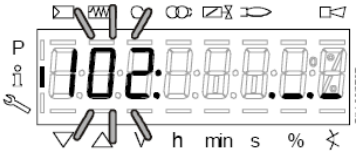


the display shows parameter **102** flashing on the left and characters **.**_**.**_ on the right.

6 press InFo for 1-3 seconds: the date will appear

7 press InFo to go back to parameter “102”

8 by pressing + / -, it is possible to scroll up/down the parameter list (see table above), or, by pressing ESC or InFo for more seconds, the display will show

9 Once the last parameter is accessed (143) by pressing **+** , the **End** message will flash.

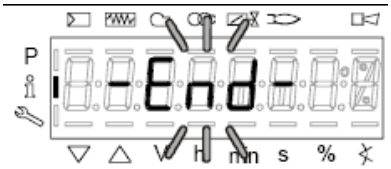


10 Press **InFo** for more than three seconds or  for more than three seconds orto return to the normal display.

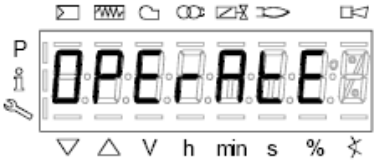

If a message like the one below is shown during operation,

it means that the burner is locked out and the Errore code is shown (in the example “error code:4”); this message is alternating with another message

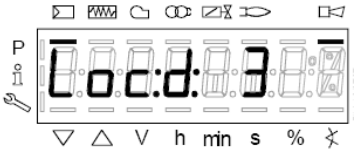


Diagnostic code (in the example “diagnostic code:3”). Record the codes and find out the fault in the Error table.
To perform the reset, press InFo for one second:

The unit displays an event which does not lead to shutdown.
The display shows current error code **c:** alternating with diagnostic code **d**:

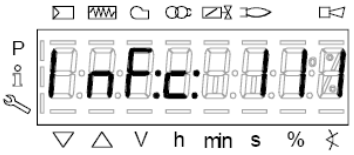


.
Press **InFo** to return to the display of phases.
Example: Error code **111** / diagnostic code 0

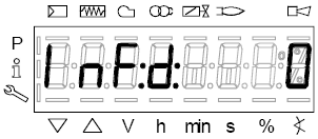


To reset, press InFo for a second. Record the codes and check the Error List to find the type of faults.

### *Service level*

To enter the Service mode, press InFo until the display will show:

The service level shows all the information about flame intensity, actuators position, number and lock codes:

| *Parameter* | *Description* |
|---|---|
| 954 | Flame intensity |
| 121 | % output, if set = automatic operation |
| 922 | Actuators position, 00=combustibile; 01= aria |
| 161 | Lock-outs number |
| 701..725 | Lock-outs History (see chapter 23 in the LMV2x manual) |

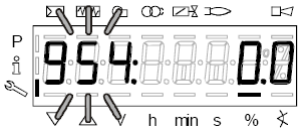


1 the first parameter will be “954”: the percentage of flame is shown on the right. By pressinf + or - it is possible to scroll up/down the parameter list.

2 Once the last parameter is accessed (143) by pressing **+** , the **End** message will blink.

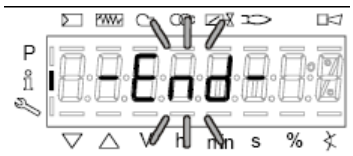


3 Press **InFo** for more than three seconds or  for more than three seconds orto return to the normal display.

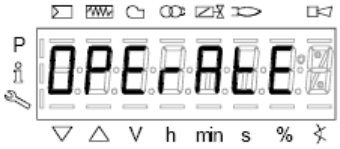


For further nformation, see tha LMV2 related manual.

## PART IV: MAINTENANCE

At least once a year carry out the maintenance operations listed below. In the case of seasonal servicing, it is recommended to carry out the maintenance at the end of each heating season; in the case of continuous operation the maintenance is carried out every 6 months.

***WARNING: ALL OPERATIONS ON THE BURNER MUST BE CARRIED OUT WITH THE MAINS DISCONNECTED AND THE FUEL MANAUL CUTOFF VALVES CLOSED!***

***ATTENTION: READ CAREFULLY THE "WARNINGS" CHAPTER AT THE BEGINNIG OF THIS MANUAL.***

### *ROUTINE MAINTENANCE*

- Clean and examine the gas filter and replace it if necessary.
- Clean and examine the oil filter cartridge and replace it if necessary.
- Examine the flexible hoses and check for possible leaks.
- Check and clean if necessary the oil heaters and the tank, according to the fuel type and its use; remove the heaters flange fixing nuts and remove the heaters from the tank: clean by using steam or solvents and not metallic things.
- Remove and clean the combustion head (page 46).
- Examine and clean the ignition electrode, adjust and replace if necessary (see page 46).
- Examine and clean the detection probe, adjust and replace if necessary.
- Examine the detection current.
- Remove and clean the heavy oil nozzle ***(Important: use solvents for cleaning, not metallic tools)*** and at the end of the maintenance procedures, after replacing the burner, turn it on and check the shape of the flame; if in doubt replace the nozzle. Where the burner is used intensively it is recommended to replace the nozzle as a preventive measure, at the begin of the operating season.
- Clean and grease joints and rotating parts.

***IMPORTANT:Remove the combustion head before checking the ignition electrode.***

- Remove and clean the compressed air regulator **A** in Fig. 21.
- Remove and clean the oil regulator **B** in Fig. 21.

**CAUTION: avoid the contact of steam, solvent and other liquids with the electric terminals of the resistor.**
**On flanged heaters, replace the seal gasket before refitting it.**
**Periodic inspections must be carried out to determine the frequency of cleaning.**

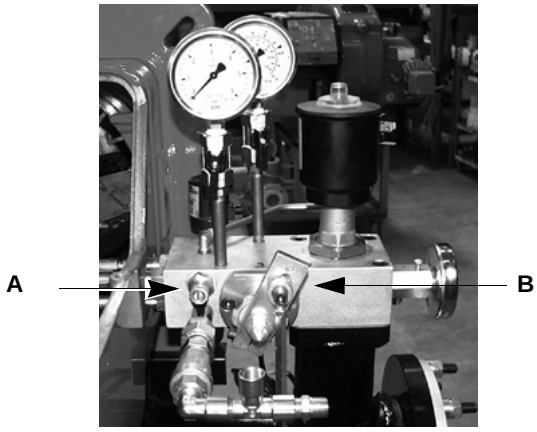


Fig. 21

### *Maintenance of the pressure governor with filter (for ignitor gas train)*

Before disassmbling the device, be sure that there is no pressurised gas inside it.

To check the filtering part (1) on threaded bodies (see picture Fig. 22):

- remove the bottom cover, unscrewing the fixing screws;
- remove the filtering part (1), clean it with water and soap, blow it with compressed air or replace it if necessary;
- reassemble the filtering part in its initial position checking that it is placed in its own slots (see picture Fig. 22);
- reassemble the bottom cover (3), being sure that the main bolt is centered in the bottom cover slot.

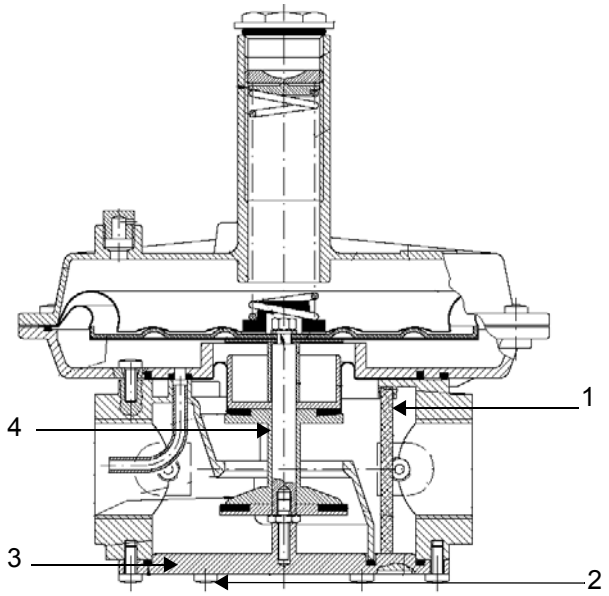


Fig. 22 - threaded body

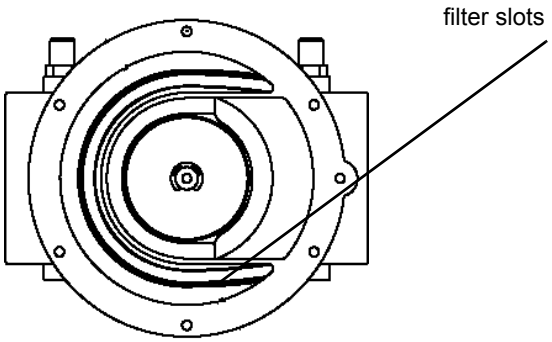


Fig. 23 - threaded body without bottom cover

***Removing the combustion head***

- Remove the cover **H**.
- Slide the photoresistor out of its housing.
- Unscrew the flexible hoses from the gun (burner side) and remove the whole assembly as shown on Fig. 24.

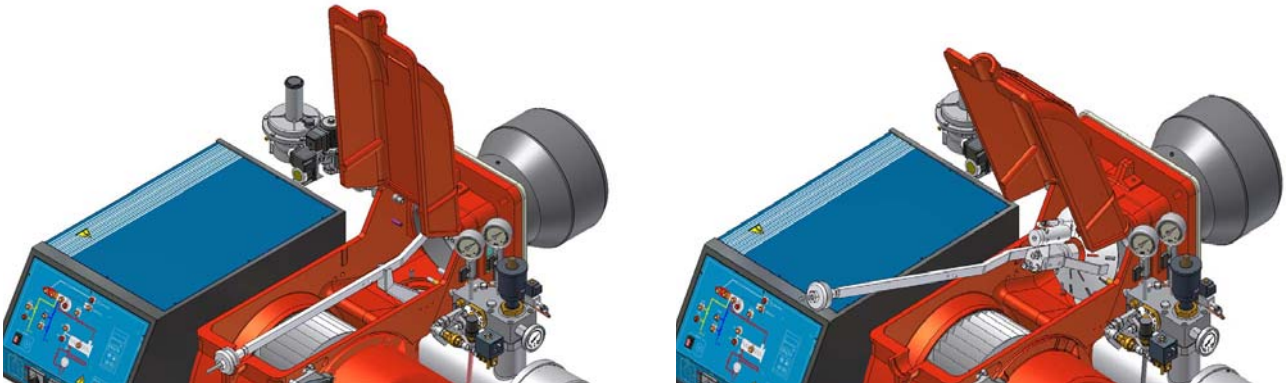

Fig. 24

## *3.1 Removing the oil gun, replacing/adjusting the nozzle and the ignition electrode*

| | |
|---|---|
| ⚠ | **ATTENTION:** avoid the electrode to get in touch with metallic parts (blast tube, head, etc.), otherwise the boiler operation would be compromised. Check the electrode position after any intervention on the combustion head. |

To remove the oil gun, proceed as follows:

1 remove the combustion head as described on the prevoius paragraph;

2 after removing the oil gun, to clean the nozzle remove it from its place after uncsrewing **V**;

3 unscrew cap **C** and clean the nozzle body **CU**; replace the nozzle if necessary;

4 in order to replace the electrode, unscrew the fixing screw and remove it: place the new electrode being careful to observe the measures (in mm) shown on next pictures and reassemble following the reversed procedure.

5 To adjust the nozzle position, unscrew the fixing screw, move the nozzle backwards or forwards, then fix the screw on the new position. In the example from “1” to “2” - see picture below.

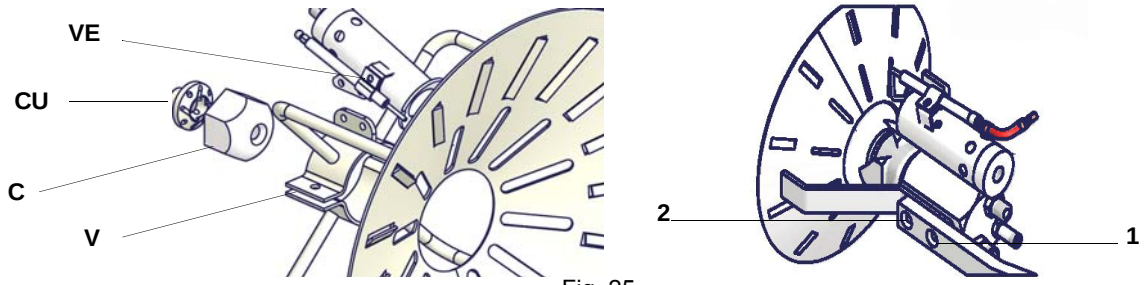


Fig. 25

**To change the nozzle position, please contact the Technical Dpt.**

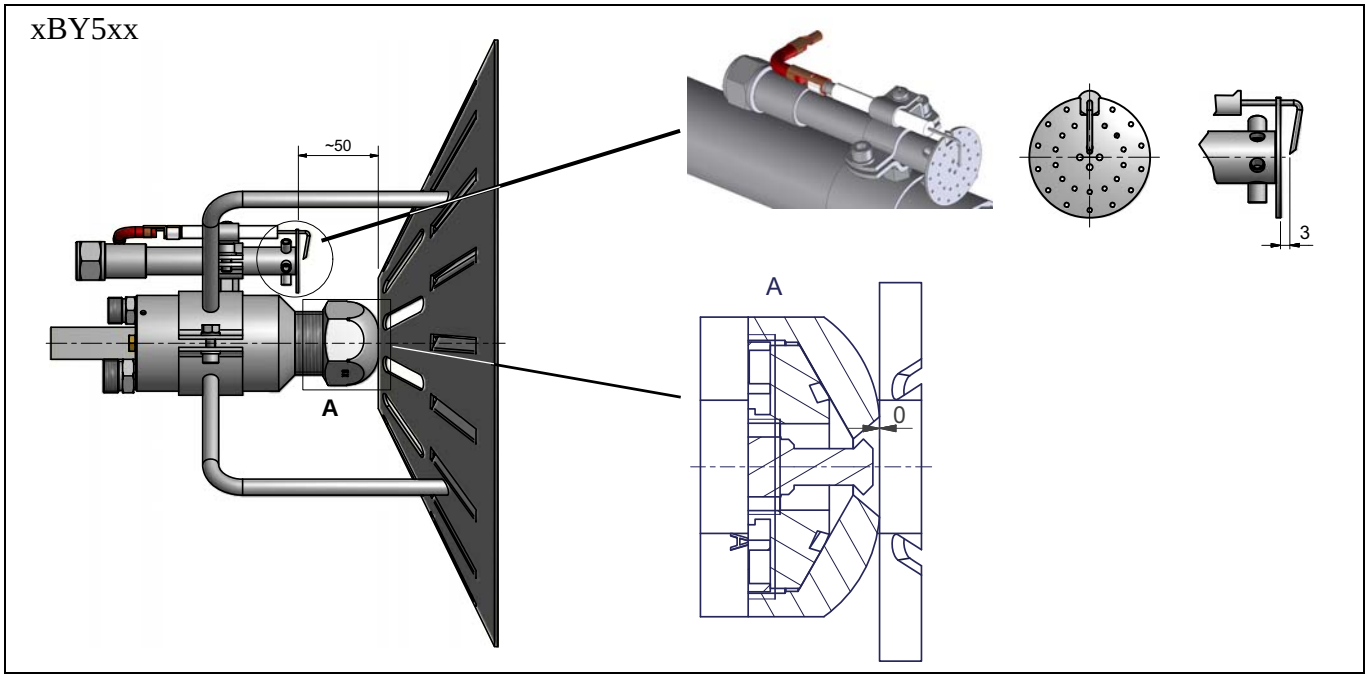


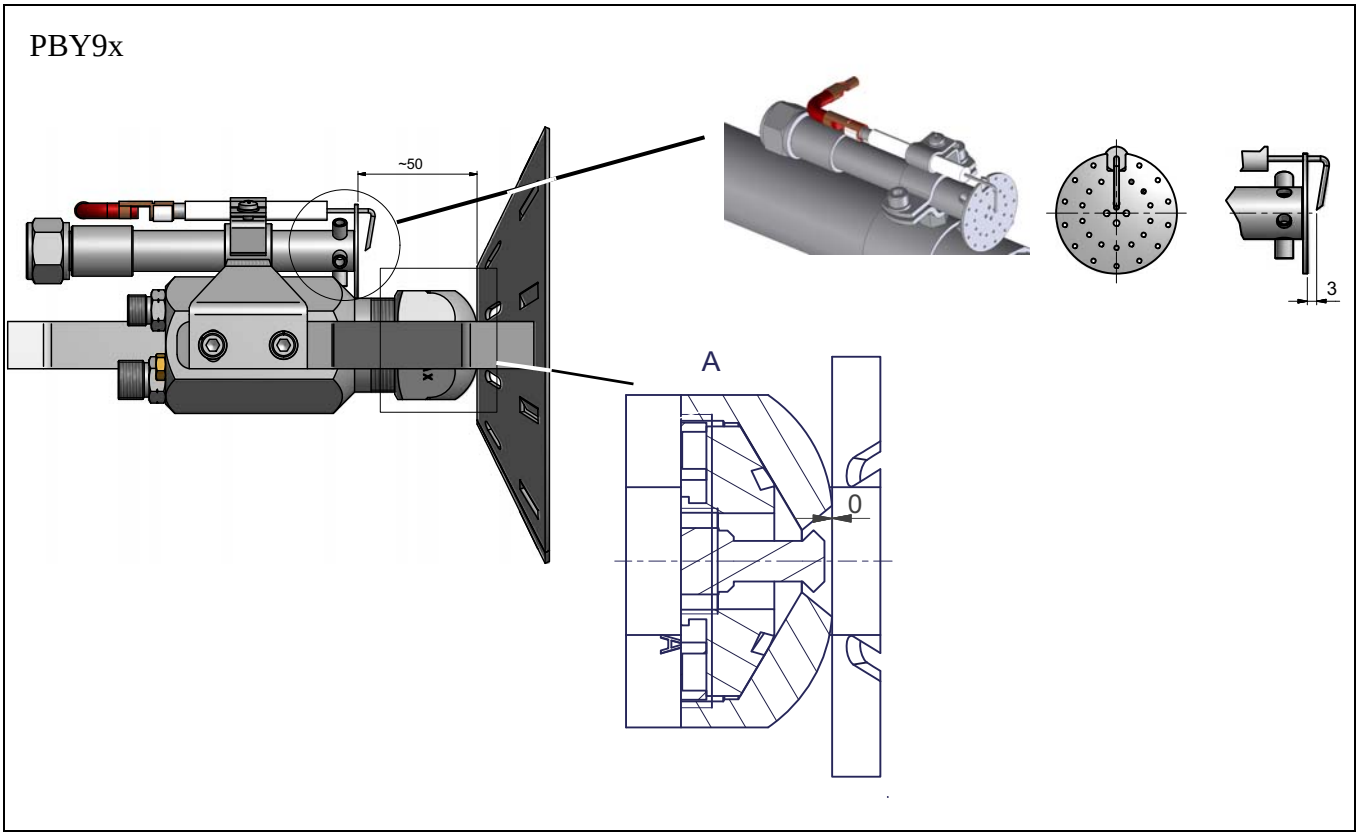

### *Checking the detection current*

.To check the detection signal follow the scheme in the picture below. If the signal is less than the value indicated, check the position of the detection electrode or detector, the electrical contacts and, if necessary, replace the electrode or the detector.

| Device | Flame detector | Minimum detection signal |
|---|---|---|
| Siemens LMV2x/3x | QRA | 70 µA (intensity of flame >24%) |
| | Ionization probe | 4 µA (values on display: 30%) |
| | QRB | <230 kΩ (intensity of flame >16%) |
| | QRB4 | Flame intensity (parameter 954) >16% |

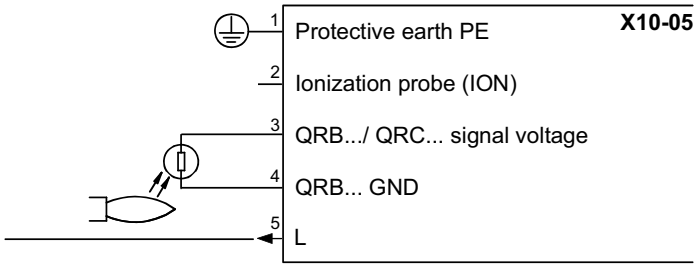


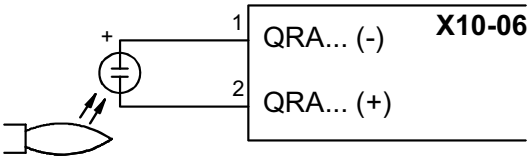


### *Extraneous light*

Extraneous light during standby (phase 12) leads to start prevention, followed by a restart.

Extraneous light during the prepurge phase leads to immediate lockout.

If extraneous light occurs during the shutdown phase, the system switches to the safety phase.
One repetition is permitted. This means that if the error occurs again the next time the system is shut down, the unit initiates lockout.

### *Seasonal stop*

To stop the burner in the seasonal stop, proceed as follows:

1 turn the burner main switch to 0 (Off position)
2 disconnect the power mains
3 close the fuel valve of the supply line

### *Burner disposal*

In case of disposal, follow the instructions according to the laws in force in your country about the “Disposal of materials”.

## WIRING DIAGRAMS

Refer to the attached wiring diagrams.

**WARNING**

1 - Electrical supply 230V 50Hz 1 a.c./400V 50Hz 3N a.c.

2 - Do not reverse phase with neutral

3 - Ensure burner is properly earthed

***Heavy oil operation***

| | THE BURNER DOESN'T START | THE BURNER REPEATS PRE-PURGE | NOISY FUEL PUMP | THE BURNER DOESN'T START AND STOPS | THE BURNER STARTS AND STOPS | THE BURNER DOESN'T SWITCH TO HIGH FLAME | THE BURNER STOPS DURING OPERATION | THE BURNER STOPS AND REPEATS THE CYCLE DURING OPE-RATION |
|---|---|---|---|---|---|---|---|---|
| MAIN SWITCH OPEN | ● | | | | | | | |
| LINE FUSE INTERVENTION | ● | | | | | | | |
| MAX. PRESSURE SWITCH FAULT | ● | | | | | | | ● |
| FAN THERMAL CUTOUT INTERVENTION | ● | | | | | | | |
| AUXILIARY RELAIS FUSES INTERVENTION | ● | | | | | | | |
| CONTROL BOX FAULT | ● | ● | | ● | ● | | ● | |
| SERVOCONTROL FAULT | | | | | | ● | | |
| SMOKEY FLAME | | | | | ● | | ● | |
| IGNITION TRANSFORMER FAULT | | | | ● | | | | |
| IGNITION ELECTRODE DIRTY OR WRONG POSI-TIONED | | | | ● | | | | |
| DIRTY NOZZLE | | | | ● | | | ● | |
| FUEL SOLENOID VALVE DEFECTIVE | | | | ● | | | ● | |
| PHOTORESISTOR DIRTY OR DEFECTIVE | | | | | ● | | ● | |
| HI-LO FLAME THERMOSTAT DEFECTIVE | | | | | | ● | | |
| WRONG POSITION OF SERVOCONTROL CAMS | | | | | | ● | | |
| FUEL PRESSURE TOO LOW | | | | ● | | | | |
| DIRTY FUEL FILTERS | | | ● | ● | | | ● | |

C.I.B. UNIGAS S.p.A.
Via L.Galvani, 9 - 35011 Campodarsego (PD) - ITALY
Tel. +39 049 9200944 - Fax +39 049 9200945/9201269
web site: www.cibunigas.it - e-mail: cibunigas@cibunigas.it

Note: specifications and data subject to change. Errors and omissions exceptd.

# AZL2x - LMV2x/3x
# Burner Management System

## Service manual

M12916CD Rev. 3.4 03/2023

**INDEX**

*MICROPROCESSOR CONTROLLED SYSTEM* ..... 6

*User interface* ..... 6

*Parameters level (heating engineer)* ..... 8

*Setting menu* ..... 9

*Block 000: Internal Parameter* ..... 10

*Block 100: General information* ..... 10

*Block 200: Burner control* ..... 13

*Block 400: Setting air/fuel ratio curves* ..... 25

*Block 500: Air/fuel ratio control* ..... 26

*Block 600: Actuators* ..... 28

*Block 700: Error history* ..... 31

*Block 900: Process data* ..... 32

*Actuators references* ..... 33

*Gas proving system* ..... 33

*Air-fuel curve points* ..... 33

*COMMISSIONING THE BURNER* ..... 34

*Warm setting* ..... 38

*Cold setting* ..... 39

*BURNER STARTUP WITH LMV2x ALREADY PROGRAMMED* ..... 40

*Reset / manual lockout* ..... 42

*Timeout for menu operation* ..... 42

*Entering the Parameter levels* ..... 43

*Info level* ..... 44

*Service level* ..... 46

*PHASES LIST* ..... 47

*BACKUP PARAMETER WITH AZL2x* ..... 48

*RESTORE PARAMETER FROM AZL2x TO LMV..* ..... 49

*WIRING DIAGRAM* ..... 65

*Wiring connection for LMV20* ..... 65

*Wiring variants for LMV27* ..... 66

*Wiring variants for LMV26* ..... 67

*Wiring variants for LMV37* ..... 68

## DANGERS, WARNINGS AND NOTES OF CAUTION

**THIS MANUAL IS SUPPLIED AS AN INTEGRAL AND ESSENTIAL PART OF THE PRODUCT AND MUST BE DELIVERED TO THE USER.**

**INFORMATION INCLUDED IN THIS SECTION ARE DEDICATED BOTH TO THE USER AND TO PERSONNEL FOLLOWING PRODUCT INSTALLATION AND MAINTENANCE.**

**THE USER WILL FIND FURTHER INFORMATION ABOUT OPERATING AND USE RESTRICTIONS, IN THE SECOND SECTION OF THIS MANUAL. WE HIGHLY RECOMMEND TO READ IT.**

**CAREFULLY KEEP THIS MANUAL FOR FUTURE REFERENCE.**

### 1) GENERAL INTRODUCTION

- The equipment must be installed in compliance with the regulations in force, following the manufacturer's instructions, by qualified personnel.
- Qualified personnel means those having technical knowledge in the field of components for civil or industrial heating systems, sanitary hot water generation and particularly service centres authorised by the manufacturer.
- Improper installation may cause injury to people and animals, or damage to property, for which the manufacturer cannot be held liable.
- Remove all packaging material and inspect the equipment for integrity.

In case of any doubt, do not use the unit - contact the supplier.

The packaging materials (wooden crate, nails, fastening devices, plastic bags, foamed polystyrene, etc), should not be left within the reach of children, as they may prove harmful.

- Before any cleaning or servicing operation, disconnect the unit from the mains by turning the master switch OFF, and/or through the cut-out devices that are provided.
- Make sure that inlet or exhaust grilles are unobstructed.
- In case of breakdown and/or defective unit operation, disconnect the unit. Make no attempt to repair the unit or take any direct action.

Contact qualified personnel only.

Units shall be repaired exclusively by a servicing centre, duly authorised by the manufacturer, with original spare parts.

Failure to comply with the above instructions is likely to impair the unit's safety.

To ensure equipment efficiency and proper operation, it is essential that maintenance operations are performed by qualified personnel at regular intervals, following the manufacturer's instructions.

- When a decision is made to discontinue the use of the equipment, those parts likely to constitute sources of danger shall be made harmless.
- In case the equipment is to be sold or transferred to another user, or in case the original user should move and leave the unit behind, make sure that these instructions accompany the equipment at all times so that they can be consulted by the new owner and/or the installer.
- For all the units that have been modified or have options fitted then original accessory equipment only shall be used.
- This unit shall be employed exclusively for the use for which it is meant. Any other use shall be considered as improper and, therefore, dangerous.

The manufacturer shall not be held liable, by agreement or otherwise, for damages resulting from improper installation, use and failure to comply with the instructions supplied by the manufacturer.The occurrence of any of the following circustances may cause explosions, polluting unburnt gases (example: carbon monoxide CO), burns, serious harm to people, animals and things:

- Failure to comply with one of the WARNINGS in this chapter
- Incorrect handling, installation, adjustment or maintenance of the burner
- Incorrect use of the burner or incorrect use of its parts or optional supply

### 2) SPECIAL INSTRUCTIONS FOR BURNERS

- The burner should be installed in a suitable room, with ventilation openings complying with the requirements of the regulations in force, and sufficient for good combustion.
- Only burners designed according to the regulations in force should be used.
- This burner should be employed exclusively for the use for which it was designed.
- Before connecting the burner, make sure that the unit rating is the same as delivery mains (electricity, gas oil, or other fuel).
- Observe caution with hot burner components. These are, usually, near to the flame and the fuel pre-heating system, they become hot during the unit operation and will remain hot for some time after the burner has stopped.

When the decision is made to discontinue the use of the burner, the user shall have qualified personnel carry out the following operations:

a Remove the power supply by disconnecting the power cord from the mains.

b) Disconnect the fuel supply by means of the hand-operated shut-off valve and remove the control handwheels from their spindles.

**Special warnings**

- Make sure that the burner has, on installation, been firmly secured to the appliance, so that the flame is generated inside the appliance firebox.
- Before the burner is started and, thereafter, at least once a year, have qualified personnel perform the following operations:

a set the burner fuel flow rate depending on the heat input of the appliance;

b set the flow rate of the combustion-supporting air to obtain a combustion efficiency level at least equal to the lower level required by the regulations in force;

c check the unit operation for proper combustion, to avoid any harmful or polluting unburnt gases in excess of the limits permitted by the regulations in force;

d make sure that control and safety devices are operating properly;

e make sure that exhaust ducts intended to discharge the products of combustion are operating properly;

f on completion of setting and adjustment operations, make sure that all mechanical locking devices of controls have been duly tightened;

g make sure that a copy of the burner use and maintenance instructions is available in the boiler room.

- In case of a burner shut-down, reser the control box by means of the RESET pushbutton. If a second shut-down takes place, call the Technical Service, **without trying to RESET further**.
- The unit shall be operated and serviced by qualified personnel only, in compliance with the regulations in force.

### 3) GENERAL INSTRUCTIONS DEPENDING ON FUEL USED

### 3a) ELECTRICAL CONNECTION

- For safety reasons the unit must be efficiently earthed and installed as required by current safety regulations.
- It is vital that all saftey requirements are met. In case of any doubt, ask for an accurate inspection of electrics by qualified personnel, since the manufacturer cannot be held liable for damages that may be caused by failure to correctly earth the equipment.
- Qualified personnel must inspect the system to make sure that it is adequate to take the maximum power used by the equipment shown on the equipment rating plate. In particular, make sure that the system cable cross section is adequate for the power absorbed by the unit.
- No adaptors, multiple outlet sockets and/or extension cables are permitted to connect the unit to the electric mains.
- An omnipolar switch shall be provided for connection to mains, as required by the current safety regulations.
- The use of any power-operated component implies observance of a few basic rules, for example:
  - do not touch the unit with wet or damp parts of the body and/or with bare feet;
  - do not pull electric cables;

- do not leave the equipment exposed to weather (rain, sun, etc.) unless expressly required to do so;
- do not allow children or inexperienced persons to use equipment;

- The unit input cable shall not be replaced by the user.

In case of damage to the cable, switch off the unit and contact qualified personnel to replace.

When the unit is out of use for some time the electric switch supplying all the power-driven components in the system (i.e. pumps, burner, etc.) should be switched off.

### 3b) FIRING WITH GAS, LIGHT OIL OR OTHER FUELS

**GENERAL**

- The burner shall be installed by qualified personnel and in compliance with regulations and provisions in force; wrong installation can cause injuries to people and animals, or damage to property, for which the manufacturer cannot be held liable.
- Before installation, it is recommended that all the fuel supply system pipes be carefully cleaned inside, to remove foreign matter that might impair the burner operation.
- Before the burner is commissioned, qualified personnel should inspect the following:

a the fuel supply system, for proper sealing;

b the fuel flow rate, to make sure that it has been set based on the firing rate required of the burner;

c the burner firing system, to make sure that it is supplied for the designed fuel type;

d the fuel supply pressure, to make sure that it is included in the range shown on the rating plate;

e the fuel supply system, to make sure that the system dimensions are adequate to the burner firing rate, and that the system is equipped with all the safety and control devices required by the regulations in force.

- When the burner is to remain idle for some time, the fuel supply tap or taps should be closed.

**SPECIAL INSTRUCTIONS FOR USING GAS**

Have qualified personnel inspect the installation to ensure that:

a the gas delivery line and train are in compliance with the regulations and provisions in force;

b all gas connections are tight;

c the boiler room ventilation openings are such that they ensure the air supply flow required by the current regulations, and in any case are sufficient for proper combustion.

- Do not use gas pipes to earth electrical equipment.
- Never leave the burner connected when not in use. Always shut the gas valve off.
- In case of prolonged absence of the user, the main gas delivery valve to the burner should be shut off.

**Precautions if you can smell gas**

a do not operate electric switches, the telephone, or any other item likely to generate sparks;

b immediately open doors and windows to create an air flow to purge the room;

c close the gas valves;

d contact qualified personnel.

- Do not obstruct the ventilation openings of the room where gas appliances are installed, to avoid dangerous conditions such as the development of toxic or explosive mixtures.

**DIRECTIVES AND STANDARDS**

***Gas burners***

**European directives:**

- Directive 2009/142/EC - Gas Appliances;
- Directive 2006/95/EC on low voltage;
- Directive 2004/108/EC on electromagnetic compatibility

**Harmonised standards :**

-UNI EN 676 (Gas Burners;-EN 55014-1Electromagnetic compatibility - Requirements for household appliances, electric tools and similar apparatus.

-CEI EN 60335-1(Household and similar electrical appliances - Safety. Part 1: General requirements;

-EN 50165 (Electrical equipment of non-electric appliances for household and similar purposes. Safety requirements.

-EN 60335-2-102 (Household and similar electrical appliances. Safety. Particular requirements for gas, oil and solid-fuel burning appliances having electrical connections)

***Light oil burners***

**European directives:**

- Directive 2006/95/EC on low voltage;
- Directive 2004/108/EC on electromagnetic compatibility

**Harmonised standards :**

-CEI EN 60335-1(Household and similar electrical appliances - Safety. Part 1: General requirements;

-UNI 267 Automatic forced draught burners for liquid fuels

-EN 55014-1Electromagnetic compatibility - Requirements for household appliances, electric tools and similar apparatus.

-EN 50165 (Electrical equipment of non-electric appliances for household and similar purposes. Safety requirements.

**National standards :**

-UNI 7824: Monobloc nebulizer burners for liquid fuels. Characteristics and test methods

***Heavy oil burners***

**European directives:**

- Directive 2006/95/EC on low voltage;
- Directive 2004/108/EC on electromagnetic compatibility

**Harmonised standards :**

-CEI EN 60335-1 Household and similar electrical appliances - SafetyPart 1: General requirements;

-EN 55014-1Electromagnetic compatibility - Requirements for household appliances, electric tools and similar apparatus.

- EN 50165 Electrical equipment of non-electric appliances for household and similar purposes. Safety requirements.

**National standards :**

-UNI 7824: Monobloc nebulizer burners for liquid fuels. Characteristics and test methods

***Gas - Light oil burners***

**European directives:**

- Directive 2009/142/EC - Gas Appliances;
- Directive 2006/95/EC on low voltage;
- Directive 2004/108/EC on electromagnetic compatibility

**Harmonised standards :**

-UNI EN 676 Gas Burners

-EN 55014-1Electromagnetic compatibility - Requirements for household appliances, electric tools and similar apparatus.

-UNI 267 Automatic forced draught burners for liquid fuels

-CEI EN 60335-1(Household and similar electrical appliances - Safety. Part 1: General requirements;

- EN 50165 Electrical equipment of non-electric appliances for household and similar purposes. Safety requirements.

**National standards :**

-UNI 7824: Monobloc nebulizer burners for liquid fuels. Characteristics and test methods

***Gas - Heavy oil burners***

**European directives:**

- Directive 2009/142/EC - Gas Appliances;
- Directive 2006/95/EC on low voltage;
- Directive 2004/108/EC on electromagnetic compatibility

**Harmonised standards :**

-EN 55014-1Electromagnetic compatibility - Requirements for household appliances, electric tools and similar apparatus.

-UNI EN 676 (Gas Burners;

-CEI EN 60335-1(Household and similar electrical appliances - Safety. Part 1: General requirements;

- EN 50165 Electrical equipment of non-electric appliances for household and similar purposes. Safety requirements.

**National standards :**

-UNI 7824: Monobloc nebulizer burners for liquid fuels. Characteristics and test methods

***Industrial burners***

**European directives:**

- Directive 2009/142/EC - Gas Appliances;
- Directive 2006/95/EC on low voltage;
- Directive 2004/108/EC on electromagnetic compatibility

**Harmonised standards :**

-EN 55014-1Electromagnetic compatibility - Requirements for household appliances, electric tools and similar apparatus.

-EN 50165 Electrical equipment of non-electric appliances for household and similar purposes. Safety requirements.

-UNI EN 746-2: Industrial thermoprocessing equipment

## Burner data plate

For the following information, please refer to the data plate:

- burner type and burner model: must be reported in any communication with the supplier
- burner ID (serial number): must be reported in any communication with the supplier
- date of production (year and month)
- information about fuel type and network pressure

| | |
|---|---|
| Type | -- |
| Model | -- |
| Year | -- |
| S.Number | -- |
| Output | -- |
| Oil Flow | -- |
| Fuel | -- |
| Category | -- |
| Gas Pressure | -- |
| Viscosity | -- |
| El.Supply | -- |
| El.Consump. | -- |
| Fan Motor | -- |
| Protection | -- |
| Drwaing n° | -- |
| P.I.N. | -- |

**SYMBOLS USED**

| | |
|---|---|
| ***WARNING!*** | Failure to observe the warning may result in irreparable damage to the unit or damage to the environment |
| ***DANGER!*** | Failure to observe the warning may result in serious injuries or death. |
| ***WARNING!*** | Failure to observe the warning may result in electric shock with lethal consequences |

## MICROPROCESSOR CONTROLLED SYSTEM

The control system is made of the Siemens LMV central unit that performs all the burner control functions and of the Siemens AZL local programming unit that interfaces the system with the user.

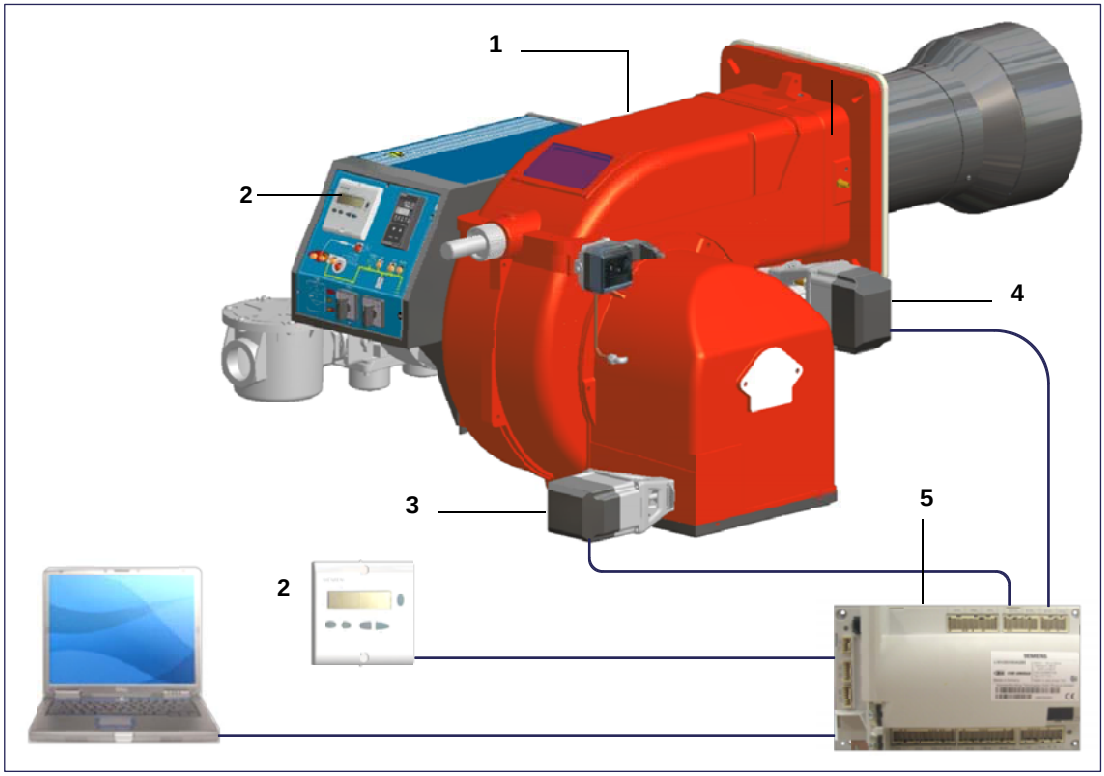


**Keys**

1 Burner
2 AZL2..
3 Air actuator
4 Fuel actuator
5 LMV2..

### *User interface*

The AZL2x.. display/programming unit is shown below:

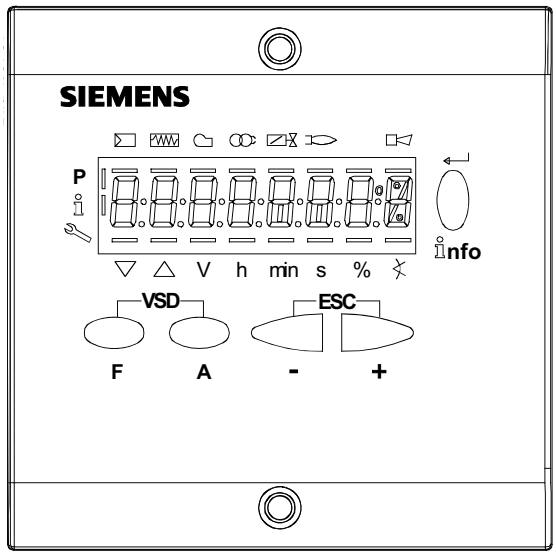

The keys functions are the following:

**Key F**
Used to adjust the “fuel” actuator position (**F**uel): :
While pressing the **F** key, the “fuel” actuator position can be changed by means of the **+** and **-** keys.

**Key A**
Used to adjust the “air” actuator position (**A**ir):
While pressing the **A** key, the “air” actuator position can be changed by means of the **+** and **-** keys.

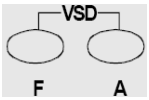


**Key F + A**
While pressing the two keys contemporarly, the **code** message will appear: by entering the proper password it is possible to access the **Service** mode.

**Info and Enter keys**
Used for **Info** and **Service** menues
Used as **Enter** key in the setting modes
Used as **Reset** key in the burner operation mode
Used to enter a lower level menu

**-Key -**
Used to decrease a a value
Used to enter Info and Serivce during the curve adjustments

**+Key +**
Used to increase a a value
Used to enter Info and Serivce during the curve adjustments

**Keys (+ & - )= ESC**
By pressing + and - at the same time, the ESCAPE function is perfomed:

to enter a lower level menu

The display will show these data:

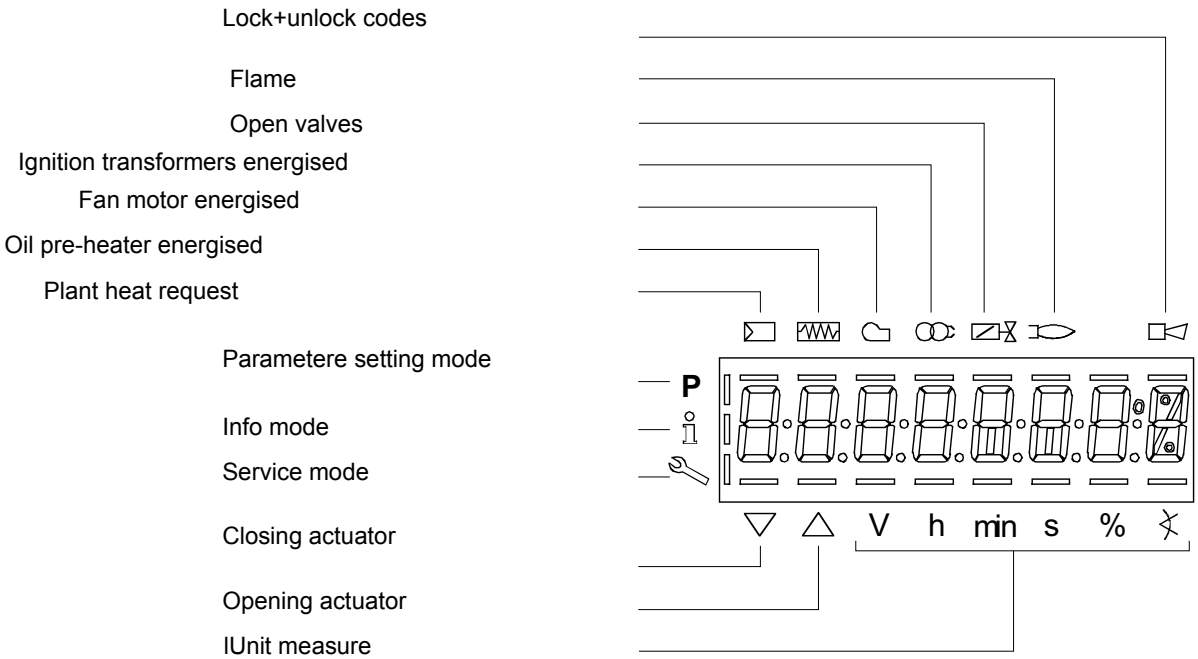

## *Parameters level (heating engineer)*

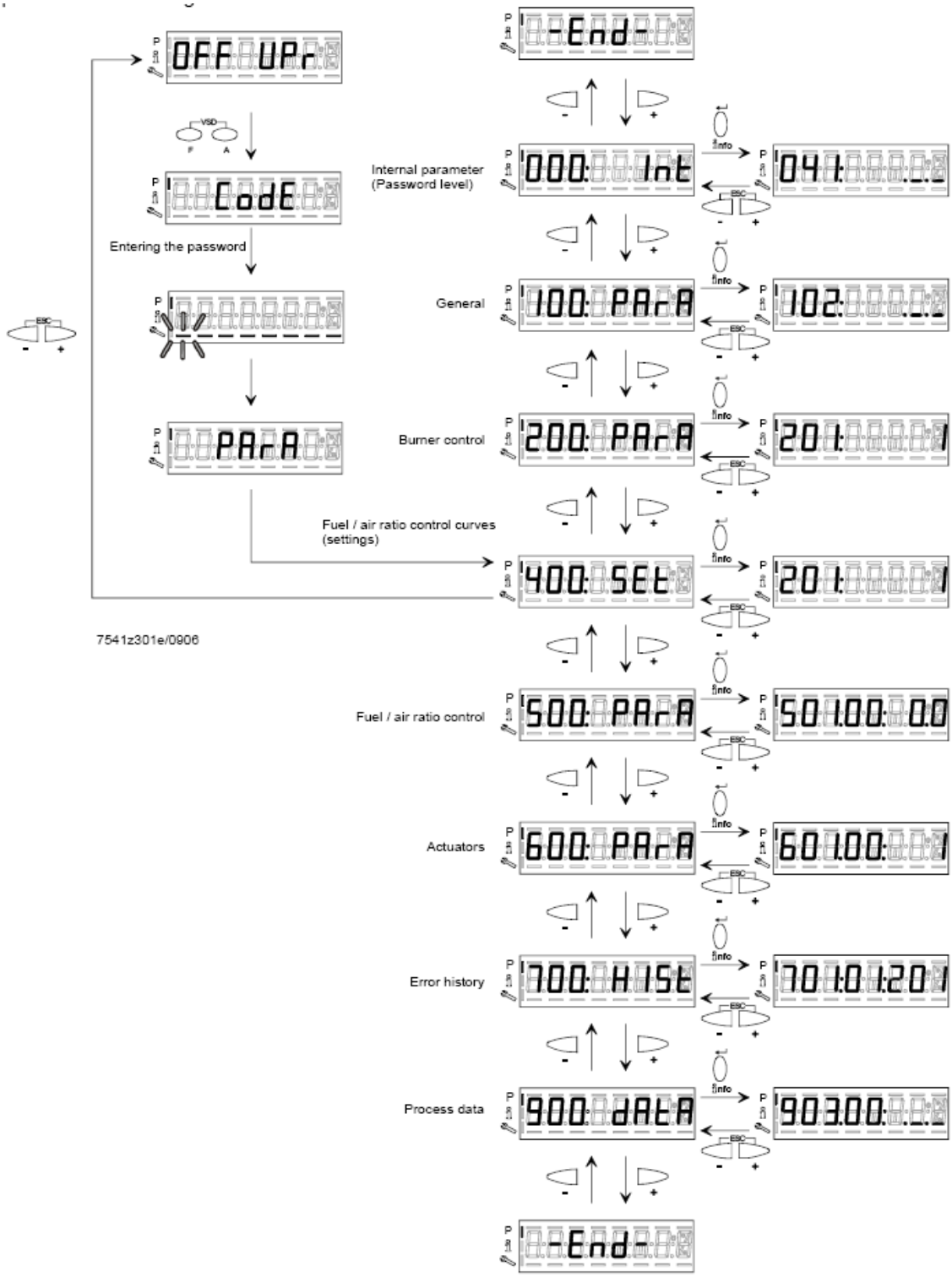

### *Setting menu*

The seeting menu is divided into different blocks:

| Bloc. | Descrizione | Description | Password |
|---|---|---|---|
| 000 | | Internal parameters | OEM / Service |
| 100 | Informazioni generali | General | OEM / Service / Info |
| 200 | Controllo bruciatore | Burner control | OEM / Service |
| 300 | Controllo bruciatore (solo **LMV26**) | Burner control (**LMV26** only) | OEM / Service |
| 400 | Curve rapporto | Ratio curves | OEM / Service |
| 500 | Controllo rapporto | Ratio control | OEM / Service |
| 600 | Servocomandi | Actuators | OEM / Service |
| 700 | Storico errori | Error history | OEM / Service / Info |
| 900 | Dati di processo | Process data | OEM / Service / Info |

The access to the various blocks is allowed by passwords. Passwords are divided into three levels:

- User level (info): no password needed
- Service level (Service)
- Manifacturer level (OEM)

### *Block 000: Internal Parameter*

| Param. | Descrizione | Description | Password |
|---|---|---|---|
| 041 | Password livello assistenza (ingegnere del calore) | Password heating engineer (4 characters) | OEM |
| 042 | Password livello OEM (costruttore del bruciatore) | Password OEM (5 characters) | OEM |
| 050 | Start backup/restore via AZL2x/PC | Start backup / restore via AZL2.../ PC software (set parameter to 1) Index 0: Create backup Index 1: Execute restore Error diagnostics via negative values (see error code 137) | SO |
| 055 | Identificazione bruciatore (backup dati) | Burner identification of AZL2... backup data set | SO |
| 056 | | ASN extraction of AZL2... backup data set | SO |
| 057 | Versione software creata dal set dati backup | Software version when creating the AZL2... backup data set | Service / Info |

### *Block 100: General information*

| Param. | Descrizione | Description | Password | LMV20 LMV27 | LMV26 | LMV37 |
|---|---|---|---|---|---|---|
| 102 | Data produzione (in gg-mm-aa) | Identification date (yy-mm-dd) | Service / Info | x | x | x |
| 103 | Numero identificativ | Identification number | Service / Info | x | x | x |
| 104 | Set di parametri preimpostati: codice cliente | Preselected parameter set: customer code | Service / Info | x | x | x |
| 105 | Set di parametri preimpostati: versione | Preselected parameter set: version | Service / Info | x | x | x |
| 107 | Versione softwar | Software version | Service / Info | x | x | x |
| 108 | Variante software | Software variant | Service / Info | x | x | x |
| 113 | Identificativo bruciatore | Burner identification | Service / Info SO password for writing | x | x | x |
| 121 | Potenza manuale Valore “Undefined = automatico Impostare un valore inferiore a = in modo che il display mostri --- altrimenti, il controllore rimarrà sempre in stand-by e il display mostrerà la scritta OFF lampeggiante. | Manual output Undefined = automatic mode | Service / Info | x | x | x |

| | | | | | | |
|---|---|---|---|---|---|---|
| 125 | Frequenza di rete<br>0 = 50 Hz<br>1 = 60 Hz | Mains frequency<br>0 = 50 Hz<br>1 = 60 Hz | Service / Info | x | x | x |
| 126 | Luminosità display | Display brightness | Service / Info | x | x | x |
| 127 | Tempo dopo il quale, se non viene premuto nessun tast il software esce dalla modalita programmazione (valore fabbrica = 60min - range impostazione: 10 - 120 min) | Timeout for menu operation (default value = 60min - range: 10 - 120 min) | OEM | x | x | x |
| 130 | Azzeramento Storico errori<br>Impostare prima il parametro a 1 e poi a 2;<br>se compare “0” = lo Storico è stato azzerato<br>se compare “-1” = scaduto tempo sequ. 1_2 | Delete display of error history<br>To delete display : set to 1 then to 2;<br>return value “0” = error history deleted<br>return value “-1” = timeout of 1_2 sequence | OEM / Service | x | x | x |
| 141 | Attivazione comunicazione bus<br>0 = off 1 = Modbus 2 = riserva | Operating mode BACS<br>0 = off 1 = Modbus 2 = reserved | OEM / Service | | x | x |
| 142 | Tempo d'arresto in caso di guasto di comunicazione | Setback time in the event of communication breakdown | OEM / Service | | x | x |
| 143 | Riserva | Reserved | Service / Info | | x | x |
| 144 | Riserva | Reserved | OEM / Service | | x | x |
| 145 | Indirizzo dispositivo per Modbus | Device address for Modbus | OEM / Service | | x | x |
| 146 | Velocità di trasmissione per Modbus | Baud rate for Modbus | OEM / Service | | x | x |
| 147 | Parità per Modbus | Parity for Modbus | OEM / Service | | x | x |
| 148 | on una interruzione della comunicazione bus:<br>0 ... 19.9 = bruciatore spento<br>20 ... 100 = 20 ... 100% potenza<br>Per il funzionamento multistadio:<br>0 = bruciatore OFF,<br>P1, P2, P3 non valido = nessun standard di prestazione della LMV. | Performance standard at interruption of communication with building automation For modulation operation the setting range is as fol-lows: 0…19.9 = burner off 20…100 = 20…100% burner rating For multistage operation apply to setting range: 0 = burner OFF, P1, P2, P3 Invalid = no performance standards of the building auto-mation | OEM / Service | | x | x |
| 161 | Numero di avarie | Number of faults | Service / Info | x | x | x |
| 162 | Ore di esercizio (azzerabile da Service) | Operating hours (resettable by Service) | Service / Info | x | x | x |
| 163 | Ore di esercizio (con dispositivo sotto tensione) | Operating hours (when unit is live) | Service / Info | x | x | x |
| 164 | Numero di partenze (azzerabile da Service) | Number of startups (resettable by Service) | Service / Info | x | x | x |
| 165 | Numero di partenze | Number of startups | Service / Info | x | x | x |

| | | | | | | |
|---|---|---|---|---|---|---|
| 166 | Numero totale di partenze (non azzerabile) | Total number of startups | Service / Info | x | x | x |
| 167 | Volume combustibile (azzerabile da OEM) | Fuel volume (resettable by OEM) | Service / Info | x | x | x |
| 172 | Fuel 1(secondo combustibile)Ore di esercizio (azzerabile da Service) | Fuel 1: Operation hours resettable | Service / Info | | x | |
| 174 | Fuel 1 (secondo combustibile) Numero di partenze (azzerabile da Service) | Fuel 1: Number of startups resettable | Service / Info | | x | |
| 175 | Fuel 1 (secondo combustibile) Numero di partenze | Fuel 1: Number of startups | Service / Info | | x | |
| 177 | Fuel 1 (secondo combustibile) Volume combustibile (azzerabile da OEM) | Fuel 1: Fuel volume resettable ($m^3$, l, $ft^3$, gal) | Service / Info | | x | |

| Param. | Descrizione | Description | Password | LMV20<br>LMV27 | LMV26 | LMV37 |
|---|---|---|---|---|---|---|
| 201 | Modalità funzionamento bruciatore ( rampa combustibile, modulante / multistadio, servo-comandi, ecc.)<br>__= non definito (cancellazione curve)<br>**1** = accensione diretta a gas (G mod)<br>**2** = accensione tramite pilota gas con attacco tra le due elettrovalvole EV1/EV2 del gas (Gp1 mod)<br>**3** = accensione tramite pilota gas con attacco a monte dell'elettrovalvola EV1 del gas (Gp2 mod)<br>**4** = accensione a gasolio - modulante (Lo mod)<br>**5** = accensione a gasolio - bistadio (Lo 2 stage)<br>**6** = accensione a gasolio - tristadio (Lo 3 stage)<br>**7** = accensione diretta a gas - regolazione pneumatica (G mod pneu)<br>**8** = accensione tramite pilota gas con attacco tra le due elettrovalvole EV1/EV2 del gas - regolazione pneumatica (Gp1 mod pneu)<br>**9** = accensione tramite pilota gas con attacco a monte dell'elettrovalvola EV1 del gas - regolazione pneumatica (Gp2 mod pneu) | Burner operating mode (fuel train, modulating / multistage, actuators, etc..)<br>__= undefined (delete curves)<br>**1** = gas direct ignition (G mod)<br>**2** = ignition by gas pilot connected between the two gas solenoid valves EV1/EV2 (Gp1 mod)<br>**3** = ignition by gas pilot connected upstream the gas EV1 (Gp2 mod)<br>**4** = light oil ignition - modulating (Lo mod)<br>**5** = light oil ignition - double stage (Lo 2 stage)<br>**6** = light oil ignition - three stage (Lo 3 stage)<br>**7** = gas direct ignition - pneumatic regulation (G mod pneu)<br>**8** = ignition by gas pilot connected between the two gas solenoid valves EV1/EV2 - pneumatic regulation (Gp1 mod pneu)<br>**9** = ignition by gas pilot connected upstream the gas EV1 - pneumatic regulation (Gp2 mod pneu) | OEM / Service | x | x | x |
| | **10** = olio modulante con accensione tramite pilota (LOGp mod)<br>**11** = olio 2 stadi con accensione tramite pilota (LOGp 2-stage)<br>**12** = olio modulante con 2 valvole combustibile (LOmod 2 valvole)<br>**13** = olio modulante con 2 valvole combustibile e con accensione tramite pilota (LOGp 2 valvole)<br>**14** = gas modulante pneumatico senza servomotori (Gmod pneu) | **10** = LoGp mod<br>**11** = LoGp 2-stage<br>**12** = Lo mod 2 fuel valves<br>**13** = LoGp mod 2 fuel valves<br>**14** = G mod pneu without actuator | | | | |

| | | | | | | |
|---|---|---|---|---|---|---|
| | **15** = gas rampa Gp1 modulante pneumatico senza servomotori (Gp1 mod pneu)<br>**16** = gas rampa Gp2 modulante pneumatico senza servomotori (Gp2 mod pneu)<br>**17** = olio LO 2 stadi senza servomotori<br>**18** = olio LO 3 stadi senza servomotori<br>**19** = gas Gmod con solo servomotore gas<br>**20** = gas Gp1 mod con solo servomotore gas<br>**21** = gas Gp2 mod con solo servomotore gas<br>**22** = olio LO mod con solo servomotore olio | **15** = Gp1 mod pneu without actuator<br>**16** = Gp2 mod pneu without actuator<br>**17** = Lo 2-stage without actuator<br>**18** = Lo 3-stage without actuator<br>**19** = G mod gas actuator only<br>**20** = Gp1 mod gas actuator only<br>**21** = Gp2 mod gas actuator only<br>**22** = Lo mod oil actuator only | | | | |
| 208 | Stop programma<br>**0** = non attivo<br>**1** = posizione preventilazione (Ph24 - fase 24 del programma)<br>**2** = posizione accensione (Ph36 - fase 36 del programma)<br>**3** = intervallo di tempo 1 (Ph44 - fase 44 del programma)<br>**4** = intervallo di tempo 2 (Ph52 - fase 52 del programma) | Program stop<br>**0** = deactivated<br>**1** = pre-purge position (Ph24 - program phase 24)<br>**2** = ignition position (Ph36 - program phase 36)<br>**3** = interval 1 (Ph44 - program phase 44)<br>**4** = interval 2 (Ph52 - program phase 52) | OEM / Service | x | x | x |
| 210 | Allarme impedimento avviamento<br>**0** = non attivo<br>**1** = attivo | Alarm in the event of start prevention<br>**0** = deactivated<br>**1** = activated | OEM / Service | x | x | x |
| 211 | Tempo aumento giri ventilatore (valore fabbrica = 2s - range impostazione: 2 - 60 s) | Fan ramp up time (default value = 2s - range: 2 - 60 s) | OEM / Service | x | x | x |
| 212 | Tempo massimo raggiungimento bassa fiamma (valore fabbrica = 45 s - range impostazione: 0.2 s - 10 min)<br>Stabilisce il massimo intervallo di tempo durante il quale il bruciatore raggiunge la minima potenza e poi si spegne | Maximum time down to low-fire (default value = 45 s - range: 0.2 s - 10 min)<br>It states the maximum time interval during which the burner drives to the low output and then turns off | OEM / Service | | x | |
| 213 | Tempo minimo raggiungimento posizione di stand by (valore fabbrica = 2 s - range impostazione: 2 - 60 s) | Min. time home run (default value = 2 s - range: 2 - 60 s) | OEM | x | x | x |
| 214 | Tempo massimo inizio partenza | Max. time start release | OEM | x | x | x |
| 215 | Limite ripetizioni catena di sicurezza (valore fabbrica = 16 - range impostazione:1 - 16) | Repetition limit safety loop (default value = 16 - range: 1 - 16) | OEM / Service | x | x | x |
| 217 | Tempo massimo per rilevazione segnale (valore fabbrica = 30s - range impostazione: 5s - 10 min) | Max. time to detector signal (default value = 30s - range: 5s - 10 min) | OEM | x | x | x |

| | | | | | | |
|---|---|---|---|---|---|---|
| 221 | Gas: sonda rilevazione fiamma attivo (valore fabbrica = 1) | Gas: active detector flame evaluation (default value = 1)<br>**0** = QRB../QRC..<br>**1** = ION / QRA.. | OEM / Service | x | x | x |
| 222 | Gas: Preventilazione (valore fabbrica = 1)<br>**1** = attivo<br>**0** = non attivo<br>ATTENZIONE : In ambito civile la norma EN676 rende obbligatoria la preventilazione. In ambito industriale, vedere i casi in cui la norma EN746-2 prevede la possibilità di non fare la preventilazione.<br>In questi ultimi casi il bruciatore deve essere costruito obbligatoriamente con controllo di tenuta e valvole gas in classe A | Gas: Pre-purging (default value = 1)<br>**1** = active<br>**0** = deactivated<br>WARNING: in the civil field, the prepurge is mandatory according to the standard EN676. In the industrial fiels, check if the pre purge can be avoided according to the stanrds EN746-2<br>If the prepurge is not performed, the burner must be equipped with two valves and the proving system. | OEM / Service | x | x | x |
| 223 | Limite ripetizioni pressostato gas di minima pressione (valore fabbrica = 16 - range impostazione:1 - 16) | Repetition limit pressure switch-min-gas (default value = 16 - range:1 - 16) | OEM / Service | x | x | x |
| 225 | Gas: tempo di preventilazione (valore fabbrica = 20s - range impostazione:20s - 60min) | Gas: Prepurge time (default value = 20s - range:20s - 60min) | OEM / Service | x | x | x |
| 226 | Gas: tempo di preaccensione (valore fabbrica = 2s - range impostazione:0.2s - 60min) | Gas: Preignition time (default value = 2s - range: 0.2s - 60min) | OEM / Service | x | x | x |
| 227 | Gas: tempo di sicurezza 1 (TSA1) (valore fabbrica = 3s - range impostazione:0.2 - 10s) | Gas: Safety time 1 (TSA1) (default value = 3s - range: 0.2 - 10s) | OEM | x | x | x |
| 229 | Gas: tempo di risposta a cadute di pressione entro TSA1 e TSA2 (valore fabbrica = 1.8s - range impostazione:0.2s - 9.8s) | Gas: time to respond to pressure faults in TSA1 e TSA2 (default value = 1.8s - range: 0.2s - 9.8s) | OEM | x | x | x |
| 230 | Gas: Intervallo 1 (valore fabbrica = 2s - range impostazione:0.2s - 60min) | Gas: Interval 1 (default value = 2s - range: 0.2s - 60min) | OEM / Service | x | x | x |
| 231 | Gas: tempo di sicurezza 2 (TSA2) (valore fabbrica = 3s - range impostazione:0.2 - 10s) | Gas: Safety time 2 (TSA2) (default value = 3s - range:0.2 - 10s) | OEM | x | x | x |
| 232 | Gas: Intervallo 2 (valore fabbrica = 2s - range impostazione:0.2s - 60min) | Gas: Interval 2 (default value = 2s - range:0.2s - 60min) | OEM / Service | x | x | |
| 233 | Gas: Tempo postcombustione (valore fabbrica = 8s - range impostazione:0.2s - 60s) | Gas: postcombustion time (default value = 8s - range:0.2s - 60s) | OEM / Service | x | x | x |
| 234 | Gas: Tempo postventilazione (valore fabbrica = 0.2s - range impostazione:0.2s - 180min) | Gas: Postpurge time (default value = 0.2s - range:0.2s - 180min) | OEM / Service | x | x | x |

| | | | | | | |
|---|---|---|---|---|---|---|
| 236 | Gas: Pressostato gas di minima (default = 1)<br>0 = inattivo<br>1 = pressostato gas di minima (a monte valvola V1)<br>2 = controllo perditavalvole via pressostato (montato tra le valvole V1 e V2) | Gas: Pressure switch-min input<br>0 = inactive<br>1 = pressure switch-min (upstream of fuel valve 1 (V1))<br>2 = valve proving via pressure switch-min (between fuel valves 1 (V1) and 2 (V2)) | OEM / Service | x | x | |
| 237 | Gas: Pressostato gas di massima / ingresso-POC<br>0 = inattivo<br>1= pressostato gas di massima<br>2= POC<br>3 = pressostato controllo perdite | Gas: Pressure switch-max / POC input<br>0 = inactive 1 = pressure switch-max<br>2 = POC<br>3 = pressure switch valve proving | | | x | x |
| 239 | Gas: Forzatura al funzionamento intermittente<br>0 = disattivato<br>1 = attivato<br>Attenzione : di default questo parametro è attivo = (1); esso è modificabile solo su LMV37. Dal punto di vista della sicurezza, il funzionamento continuo è valido esclusivamente per bruciatori di gas con elettrodo di rilevazione. | Gas: Forced intermittent operation 0 = deactivated 1 = activated | OEM | | | x |
| 240 | Limite ripetizioni perdita di fiamma (valore fabbrica = 2 - range impostazione:1 - 2) | Repetition limit loss of flame (default value= 2 - range:1 - 2) | OEM | x | x | x |
| 241 | Gas: esecuzione controllo tenuta (valore fabbrica = 2)<br>**0** = no controllo tenuta<br>**1** = controllo tenuta in avviamento<br>**2** = controllo tenuta in arresto<br>**3** = controllo tenuta in arresto e in avviamento | Gas: execution proving test (default value= 2)<br>**0** = no proving test<br>**1** = proving test on startup<br>**2** = proving test on shutdown<br>**3** = proving test on shutdown and on startup | OEM / Service | x | x | x |
| 242 | Gas: tempo evacuazione controllo tenuta (valore fabbrica = 3s - range impostazione:0.2s - 10s) | Gas: proving test evacuation time (default value = 3s - range:0.2s - 10s) | OEM | x | x | x |

| | | | | | | |
|---|---|---|---|---|---|---|
| 243 | Gas: tempo pressione atmosferica controllo tenuta (valore fabbrica = 10s - range impostazione:0.2s - 60s) | Gas: proving test time atmospheric pressure (default value = 10s - range:0.2s - 60s) | OEM | x | x | x |
| 244 | Gas: tempo riempimento controllo tenuta (valore fabbrica = 3s - range impostazione:0.2s - 10s) | Gas: proving test filling time (default value = 3s - range:0.2s - 10s) | OEM | x | x | x |
| 245 | Gas: tempo test pressione gas (valore fabbrica = 10s - range impostazione:0.2s - 60s) | Gas: proving test time gas pressure (default value = 10s - range:0.2s - 60s) | OEM | x | x | x |
| 246 | Gas: tempo attesa consenso pressostato di minima (valore fabbrica = 10s - range impostazione:0.2s - 60s)<br>Se la pressione del gas è troppo bassa, in fase 22 non verrà eseguito l'avviamento: il sistema compie un numero impostabile di tentativi finché non si arriva al blocco. Il tempo di attesa tra un tentativo e il successivo viene raddoppiato ad ogni tentativo. | Gas: waiting time gas shortage (default value = 10s - range:0.2s - 60s)<br>If the gas pressure is too low, in phase 22 the startup will not be performed: the system tries for a certain number of times the it locks out. The time interval between two attempts is doubled at each attempt. | OEM | x | x | x |
| 248 | Gas: Tempo di post-ventilazione 3 (abortito con regolatore di potenza (LR)-ON | Gas: Postpurge time 3 (abortion with load controller (LR)-ON | OEM / Service | x | x | x |
| 261 | Olio: sonda rilevazione fiamma attivo (valore fabbrica = 0)<br>**0** = QRB../QRC..<br>**1** = ION / QRA.. | Oil: active detector flame evaluation (default value = 0)<br>**0** = QRB../QRC..<br>**1** = ION / QRA.. | OEM / Service | x | x | x |
| 262 | Olio: preventilazione (valore fabbrica = 1)<br>**1** = attivo<br>**0** = non attivo<br>In ambito civile la norma EN267 rende obbligatoria la preventilazione. In ambito industriale, vedere i casi in cui la norma EN746-2 prevede la possibilità di non fare la preventilazione. | Oil: prepurging (default value = 1)<br>**0** = deactivated<br>**1** = activated<br>**0** = deactivated<br>WARNING: in the civil field, the prepurge is mandatory according to the standard EN267. In the industrial fiels, check if the pre purge can be avoided according to the standard EN746-2 | OEM / Service | x | x | x |
| 265 | Olio: tempo preventilazione (valore fabbrica = 15s - range impostazione:15s - 60min) | Oil: prepurging time (default value = 15s - range:15s - 60min) | OEM / Service | x | x | x |
| 266 | Olio: tempo preaccensione (valore fabbrica = 2s - range impostazione:0.2s - 60min) | Oil: preignition time (default value = 2s - range:0.2s - 60min) | OEM / Service | x | x | x |
| 267 | Olio: tempo di sicurezza 1 (TSA1) (valore fabbrica = 5s - range impostazione:0.2 - 15s) | Oil: safety time 1 (TSA1) (default value = 5s - range:0.2 - 15s) | OEM | x | x | x |
| 269 | Olio: tempo di risposta a cadute di pressione entro TSA1 e TSA2 (valore fabbrica = 1.8s - range impostazione:0.2s - 14.8s) | Oil: time to respond to pressure faults in TSA1 and TSA2 (default value = 1.8s - range:0.2s - 14.8s) | OEM | x | x | x |

| | | | | | | |
|---|---|---|---|---|---|---|
| 270 | Olio: Intervallo 1 (valore fabbrica = 2s - range impostazione:0.2s - 60min) | Oil: Interval 1 (default value = 2s - range:0.2s - 60min) | OEM / Service | x | x | x |
| 271 | Olio: tempo di sicurezza 2 (TSA2) (valore fabbrica = 3s - range impostazione:0.2 - 10s) | Oil: safety time 2 (TSA2) (default value = 3s - range:0.2 - 10s) | OEM | x | x | x |
| 272 | Olio: Intervallo 2 (valore fabbrica = 2s - range impostazione:0.2s - 60min) | Oil: Interval 2 (default value = 2s - range:0.2s - 60min) | OEM / Service | x | x | x |
| 273 | Olio: Tempo postcombustione (valore fabbrica = 8s - range impostazione:0.2s - 60s) | Oil: Postcombustion time (default value = 8s - range:0.2s - 60s) | OEM / Service | x | x | x |
| 274 | Olio: Tempo postventilazione (valore fabbrica = 0.2s - range impostazione:0.2s - 180min) | Oil: Postpurging time (default value = 0.2s - range:0.2s - 180min) | OEM / Service | x | x | x |
| 276 | Olio : Pressostato olio di minima (default = 1)<br>0 = inattivo<br>1 = attivo dalla fase 38<br>2 = attivo dal tempo di sicurezza (TSA) | Oil. Pressure switch-min input<br>0 = inactive<br>1 = active from phase 38<br>2 = active from safety time (TSA) | OEM / Service | x | x | |
| 277 | Olio: Pressostato olio di massima / ingresso-POC<br>0 = inattivo<br>1= pressostato olio di massima<br>2= POC | Oil: Pressure switch-max/POC input<br>0 = inactive<br>1 = pressure switch-max<br>2 = POC | | | x | |
| 279 | Olio: Forzatura al funzionamento intermittente<br>0 = disattivato<br>1 = attivato<br>Attenzione : di default questo parametro è attivo = (1); esso è modificabile solo su LMV37.. | Oil: Forced intermittent operation 0 = deactivated 1 = activated | OEM | | x | x |
| 280 | Limite ripetizioni perdita di fiamma (valore fabbrica = 2 - range impostazione:1 - 2) | Repetition limit value loss of flame (default value = 2 - range:1 - 2) | OEM | x | x | x |
| 281 | Olio: tempo iniezione olio (valore fabbr. = 1)<br>**0** = preaccensione corta (Ph38 - fase programma 38)<br>**1** = preaccensione lunga (con ventilatore) (Ph22 - fase programma 22) | Oil: time oil ignition (default value = 1)<br>**0** = short preignition (Ph38-progr. phase 38)<br>**1** = long preignition (with fan) (Ph22 - program phase 22) | OEM / Service | x | x | x |
| 284 | Olio: Tempo di post-ventilazione 3 (abortito con regolatore di potenza (LR)-ON | Oil: Postpurge time 3 (abortion with load controller (LR)-ON | OEM / Service | x | x | x |

## *Block 300: Burner control (only with LMV26)*

| Param. | Descrizione | Description | Password | LMV20 LMV27 | LMV26 | LMV37 |
|---|---|---|---|---|---|---|
| 301 | Combustibile 1 : Modalità funzionamento bruciatore ( rampa combustibile, modulante / multistadio, servocomandi, ecc.)<br>__= non definito (cancellazione curve)<br>**1** = accensione diretta a gas (G mod)<br>**2** = accensione tramite pilota gas con attacco tra le due elettrovalvole EV1/EV2 del gas (Gp1 mod)<br>**3** = accensione tramite pilota gas con attacco a monte dell'elettrovalvola EV1 del gas (Gp2 mod)<br>**4** = accensione a gasolio - modulante (Lo mod)<br>**5** = accensione a gasolio - bistadio (Lo 2 stage)<br>**6** = accensione a gasolio - tristadio (Lo 3 stage)<br>**7** = accensione diretta a gas - regolazione pneumatica (G mod pneu)<br>**8** = accensione tramite pilota gas con attacco tra le due elettrovalvole EV1/EV2 del gas - regolazione pneumatica (Gp1 mod pneu)<br>**9** = accensione tramite pilota gas con attacco a monte dell'elettrovalvola EV1 del gas - regolazione pneumatica (Gp2 mod pneu)<br>**10** = olio modulante con accensione tramite pilota (LOGp mod) | Fuel 1 : Burner operating mode (fuel train, modulating / multistage, actuators, etc..)<br>__= undefined (delete curves)<br>**1** = gas direct ignition (G mod)<br>**2** = ignition by gas pilot connected between the two gas solenoid valves EV1/EV2 (Gp1 mod)<br>**3** = ignition by gas pilot connected upstream the gas EV1 (Gp2 mod)<br>**4** = light oil ignition - modulating (Lo mod)<br>**5** = light oil ignition - double stage (Lo 2 stage)<br>**6** = light oil ignition - three stage (Lo 3 stage)<br>**7** = gas direct ignition - pneumatic regulation (G mod pneu)<br>**8** = ignition by gas pilot connected between the two gas solenoid valves EV1/EV2 - pneumatic regulation (Gp1 mod pneu)<br>**9** = ignition by gas pilot connected upstream the gas EV1 - pneumatic regulation (Gp2 mod pneu)<br>**10** = LoGp mod | OEM / Service | | x | |

| | | | | | | |
|---|---|---|---|---|---|---|
| | **11** = olio 2 stadi con accensione tramite pilota (LOGp 2-stage)<br>**12** = olio modulante con 2 valvole combustibile (LOmod 2 valvole)<br>**13** = olio modulante con 2 valvole combustibile e con accensione tramite pilota (LOGp 2 valvole)<br>**14** = gas modulante pneumatico senza servomotori (Gmod pneu)<br>**15** = gas rampa Gp1 modulante pneumatico senza servomotori (Gp1 mod pneu)<br>**16** = gas rampa Gp2 modulante pneumatico senza servomotori (Gp2 mod pneu) | **11** = LoGp 2-stage<br>**12** = Lo mod 2 fuel valves<br>**13** = LoGp mod 2 fuel valves<br>**14** = G mod pneu without actuator<br>**15** = Gp1 mod pneu without actuator<br>**16** = Gp2 mod pneu without actuator | | | | |
| | **17** = olio LO 2 stadi senza servomotori<br>**18** = olio LO 3 stadi senza servomotori<br>**19** = gas Gmod con solo servomotore gas<br>**20** = gas Gp1 mod con solo servomotore gas<br>**21** = gas Gp2 mod con solo servomotore gas<br>**22** = olio LO mod con solo servomotore olio | **17** = Lo 2-stage without actuator<br>**18** = Lo 3-stage without actuator<br>**19** = G mod gas actuator only<br>**20** = Gp1 mod gas actuator only<br>**21** = Gp2 mod gas actuator only<br>**22** = Lo mod oil actuator only | | | x | |
| 321 | Combustibile 1 - Gas: sonda rilevazione fiamma attivo (valore fabbrica = 1) -<br>**0** = QRB../QRC..<br>**1** = ION / QRA.. | Fuel 1 - Gas: active detector flame evaluation (default value = 1)<br>**0** = QRB../QRC..<br>**1** = ION / QRA.. | OEM / Service | | x | |
| 322 | Combustibile 1 - Gas: Preventilazione (valore fabbrica = 1)<br>**1** = attivo<br>**0** = non attivo<br>ATTENZIONE : In ambito civile la norma EN676 rende obbligatoria la preventilazione. In ambito industriale, vedere i casi in cui la norma EN746-2 prevede la possibilità di non fare la preventilazione.<br>In questi ultimi casi il bruciatore deve essere costruito obbligatoriamente con controllo di tenuta e valvole gas in classe A. | Fuel 1 - Gas: Pre-purging (default value = 1)<br>**1** = active<br>**0** = deactivated<br>WARNING: in the civil field, the prepurge is mandatory according to the standard EN676. In the industrial fiels, check if the pre purge can be avoided according to the stanrds EN746-2<br>If the prepurge is not performed, the burner must be equipped with two valves and the proving system. | OEM / Service | | x | |
| 323 | Limite ripetizioni pressostato gas di minima pressione (valore fabbrica = 16 - range impostazione:1 - 16) | Repetition limit pressure switch-min-gas (default value = 16 - range:1 - 16) | OEM / Service | | x | |
| 325 | Combustibile 1 - Gas: tempo di preventilazione (valore fabbrica = 20s - range impostazione:20s - 60min) | Fuel 1 - Gas: Prepurge time (default value = 20s - range:20s - 60min) | OEM / Service | | x | |

| | | | | | | |
|---|---|---|---|---|---|---|
| 326 | Combustibile 1 - Gas: tempo di preaccensione (valore fabbrica = 2s - range impostazione:0.2s - 60min) | Fuel 1 - Gas: Preignition time (default value = 2s - range: 0.2s - 60min) | OEM / Service | | x | |
| 327 | Combustibile 1 - Gas: tempo di sicurezza 1 (TSA1) (valore fabbrica = 3s - range impostazione:0.2 - 10s) | Fuel 1 - Gas: Safety time 1 (TSA1) (default value = 3s - range: 0.2 - 10s) | OEM | | x | |
| 329 | Combustibile 1 - Gas: tempo di risposta a cadute di pressione entro TSA1 e TSA2 (valore fabbrica = 1.8s - range impostazione:0.2s - 9.8s) | Fuel 1 - Gas: time to respond to pressure faults in TSA1 e TSA2 (default value = 1.8s - range: 0.2s - 9.8s) | OEM | | x | |
| 330 | Combustibile 1 - Gas: Intervallo 1 (valore fabbrica = 2s - range impostazione:0.2s - 60min) | Fuel 1 - Gas: Interval 1 (default value = 2s - range: 0.2s - 60min) | OEM / Service | | x | |
| 331 | Combustibile 1 - Gas: tempo di sicurezza 2 (TSA2) (valore fabbrica = 3s - range impostazione:0.2 - 10s) | Fuel 1 - Gas: Safety time 2 (TSA2) (default value = 3s - range:0.2 - 10s) | OEM | | x | |
| 332 | Combustibile 1 - Gas: Intervallo 2 (valore fabbrica = 2s - range impostazione:0.2s - 60min) | Fuel 1 - Gas: Interval 2 (default value = 2s - range:0.2s - 60min) | OEM / Service | | x | |
| 333 | Combustibile 1 - Gas: Tempo postcombustione (valore fabbrica = 8s - range impostazione:0.2s - 60s) | Fuel 1 - Gas: postcombustion time (default value = 8s - range:0.2s - 60s) | OEM / Service | | x | |
| 334 | Combustibile 1 - Gas: Tempo postventilazione (valore fabbrica = 0.2s - range impostazione:0.2s - 180min) | Fuel 1 - Gas: Postpurge time (default value = 0.2s - range:0.2s - 180min) | OEM / Service | | x | |
| 336 | Combustibile 1 - Gas: Pressostato gas di minima (default = 1)<br>0 = inattivo<br>1 = pressostato gas di minima (a monte valvola V1)<br>2 = controllo perditavalvole via pressostato (montato tra le valvole V1 e V2) | Fuel 1 - Gas: Pressure switch-min input<br>0 = inactive<br>1 = pressure switch-min (upstream of fuel valve 1 (V1))<br>2 = valve proving via pressure switch-min (between fuel valves 1 (V1) and 2 (V2)) | OEM / Service | | x | |
| 337 | Combustibile 1 - Gas: Pressostato gas di massima / ingressoPOC<br>0 = inattivo<br>1= pressostato gas di massima<br>2= POC<br>3 = pressostato controllo perdite | Fuel 1 - Gas: Pressure switch-max / POC input<br>0 = inactive 1 = pressure switch-max<br>2 = POC<br>3 = pressure switch valve proving | | | x | |

| | | | | | | |
|---|---|---|---|---|---|---|
| 340 | Limite ripetizioni perdita di fiamma (valore fabbrica = 2 - range impostazione:1 - 2) | Repetition limit loss of flame (default value= 2 - range:1 - 2) | OEM | | x | |
| 341 | Combustibile 1 - Gas: esecuzione controllo tenuta (valore fabbrica = 2)<br>**0** = no controllo tenuta<br>**1** = controllo tenuta in avviamento<br>**2** = controllo tenuta in arresto<br>**3** = controllo tenuta in arresto e in avviamento | Fuel 1 - Gas: execution proving test (default value= 2)<br>**0** = no proving test<br>**1** = proving test on startup<br>**2** = proving test on shutdown<br>**3** = proving test on shutdown and on startup | OEM / Service | | x | |
| 342 | Combustibile 1 - Gas: tempo evacuazione controllo tenuta (valore fabbrica = 3s - range impostazione:0.2s - 10s) | Fuel 1 - Gas: proving test evacuation time (default value = 3s - range:0.2s - 10s) | OEM | | x | |
| 343 | Combustibile 1 - Gas: tempo pressione atmosferica controllo tenuta (valore fabbrica = 10s - range impostazione:0.2s - 60s) | Fuel 1 - Gas: proving test time atmospheric pressure (default value = 10s - range:0.2s - 60s) | OEM | | x | |
| 344 | Combustibile 1 - Gas: tempo riempimento controllo tenuta (valore fabbrica = 3s - range impostazione:0.2s - 10s) | Fuel 1 - Gas: proving test filling time (default value = 3s - range:0.2s - 10s) | OEM | | x | |
| 345 | Combustibile 1 - Gas: tempo test pressione gas (valore fabbrica = 10s - range impostazione:0.2s - 60s) | Fuel 1 - Gas: proving test time gas pressure (default value = 10s - range:0.2s - 60s) | OEM | | x | |
| 346 | Combustibile 1 - Gas: tempo attesa consenso pressostato di minima (valore fabbrica = 10s - range impostazione:0.2s - 60s)<br>Se la pressione del gas è troppo bassa, in fase 22 non verrà eseguito l'avviamento: il sistema compie un numero impostabile di tentativi finché non si arriva al blocco. Il tempo di attesa tra un tentativo e il successivo viene raddoppiato ad ogni tentativo. | Fuel 1 - Gas: waiting time gas shortage (default value = 10s - range:0.2s - 60s)<br>If the gas pressure is too low, in phase 22 the startup will not be performed: the system tries for a certain number of times the it locks out. The time interval between two attempts is doubled at each attempt. | OEM | | x | |
| 348 | Combustibile 1 - Gas: Tempo di post-ventilazione 3 (abortito con regolatore di potenza (LR)-ON | Fuel 1 - Gas: Postpurge time 3 (abortion with load controller (LR)-ON | OEM / Service | | x | |
| 361 | Combustibile 1 - Olio: sonda rilevazione fiamma attivo (valore fabbrica = 0)<br>**0** = QRB../QRC..<br>**1** = ION / QRA.. | Fuel 1 - Oil: active detector flame evaluation (default value = 0)<br>**0** = QRB../QRC..<br>**1** = ION / QRA.. | OEM / Service | | x | |

| | | | | | | |
|---|---|---|---|---|---|---|
| 362 | Combustibile 1 - Olio: preventilazione (valore fabbrica = 1)<br>**1** = attivo<br>**0** = non attivo<br>In ambito civile la norma EN267 rende obbligatoria la preventilazione. In ambito industriale, vedere i casi in cui la norma EN746-2 prevede la possibilità di non fare la preventilazione. | Fuel 1 - Oil: prepurging (default value = 1)<br>**0** = deactivated<br>**1** = activated<br>**0** = deactivated<br>WARNING: in the civil field, the prepurge is mandatory according to the standard EN267. In the industrial fiels, check if the pre purge can be avoided according to the standard EN746-2 | OEM / Service | | x | |
| 365 | Combustibile 1 - Olio: tempo preventilazione (valore fabbrica = 15s - range impostazione:15s - 60min) | Fuel 1 - Oil: prepurging time (default value = 15s - range:15s - 60min) | OEM / Service | | x | |
| 366 | Combustibile 1 - Olio: tempo preaccensione (valore fabbrica = 2s - range impostazione:0.2s - 60min) | Fuel 1 - Oil: preignition time (default value = 2s - range:0.2s - 60min) | OEM / Service | | x | |
| 367 | Combustibile 1 - Olio: tempo di sicurezza 1 (TSA1) (valore fabbrica = 5s - range impostazione:0.2 - 15s) | Fuel 1 - Oil: safety time 1 (TSA1) (default value = 5s - range:0.2 - 15s) | OEM | | x | |
| 369 | Combustibile 1 - Olio: tempo di risposta a cadute di pressione entro TSA1 e TSA2 (valore fabbrica = 1.8s - range impostazione:0.2s - 14.8s) | Fuel 1 - Oil: time to respond to pressure faults in TSA1 and TSA2 (default value = 1.8s - range:0.2s - 14.8s) | OEM | | x | |
| 370 | Combustibile 1 - Olio: Intervallo 1 (valore fabbrica = 2s - range impostazione:0.2s - 60min) | Fuel 1 - Oil: Interval 1 (default value = 2s - range:0.2s - 60min) | OEM / Service | | x | |
| 371 | Combustibile 1 - Olio: tempo di sicurezza 2 (TSA2) (valore fabbrica = 3s - range impostazione:0.2 - 10s) | Fuel 1 - Oil: safety time 2 (TSA2) (default value = 3s - range:0.2 - 10s) | OEM | | x | |
| 372 | Combustibile 1 - Olio: Intervallo 2 (valore fabbrica = 2s - range impostazione:0.2s - 60min) | Fuel 1 - Oil: Interval 2 (default value = 2s - range:0.2s - 60min) | OEM / Service | | x | |
| 373 | Combustibile 1 - Olio: Tempo postcombustione (valore fabbrica = 8s - range impostazione:0.2s - 60s) | Fuel 1 - Oil: Postcombustion time (default value = 8s - range:0.2s - 60s) | OEM / Service | | x | |
| 374 | Combustibile 1 - Olio: Tempo postventilazione (valore fabbrica = 0.2s - range impostazione:0.2s - 180min) | Fuel 1 - Oil: Postpurging time (default value = 0.2s - range:0.2s - 180min) | OEM / Service | | x | |
| 377 | Combustibile 1 - Olio: Pressostato olio di massima / ingressoPOC<br>0 = inattivo<br>1= pressostato olio di massima<br>2= POC | Fuel 1 - Oil: Pressure switch-max/POC input<br>0 = inactive<br>1 = pressure switch-max<br>2 = POC | | | x | |

| | | | | | | |
|---|---|---|---|---|---|---|
| 380 | Limite ripetizioni perdita di fiamma (valore fabbrica = 2 - range impostazione:1 - 2) | Repetition limit value loss of flame (default value = 2 - range:1 - 2) | OEM | | x | |
| 381 | Combustibile 1 - Olio: tempo iniezione olio (valore fabbr. = 1)<br>**0** = preaccensione corta (Ph38 - fase programma 38)<br>**1** = preaccensione lunga (con ventilatore) (Ph22 - fase programma 22) | Fuel 1 - Oil: time oil ignition (default value = 1)<br>**0** = short preignition (Ph38-progr. phase 38)<br>**1** = long preignition (with fan) (Ph22 - program phase 22) | OEM / Service | | x | |
| 384 | Combustibile 1 - Olio: Tempo di post-ventilazione 3 (abortito con regolatore di potenza (LR)-ON | Fuel 1 - Oil: Postpurge time 3 (abortion with load controller (LR)-ON | OEM / Service | | x | |

### *Block 400: Setting air/fuel ratio curves*

| Param. | Descrizione | Description | Password | LMV20 LMV27 | LMV26 | LMV37 |
|---|---|---|---|---|---|---|
| 401 | Curve controllo servocomando combustibile (F): si accede alla lista dei punti da impostare (da P0 a P9) - consultare paragrafo “Impostazione curve” | Ratio control curve fuel actuator (F): it accesses to the parameter list of the points to be set (P0 to P9) - see paragrapf “Setting the curves” | OEM / Service | x | x | x |
| 402 | Curve controllo servocomando aria (A): si accede alla lista dei punti da impostare (da P0 a P9) - consultare paragrafo “Impostazione curve” | Ratio control curve air actuator (A): it accesses to the parameter list of the points to be set (P0 to P9) - see paragraph “Setting the curves” | OEM / Service | x | x | x |
| 403 | Curve controllo inverter (F + A): si accede alla lista dei punti da impostare (da P0 a P9) - consultare paragrafo “Impostazione curve” | Ratio control curves VSD (curve setting only) | SO | | x | x |
| 404 | Combustibile 1 - Curve controllo servocomando combustibile 1 (F): si accede alla lista dei punti da impostare (da P0 a P9) - consultare paragrafo “Impostazione curve” | Fuel 1: Ratio control curves fuel actuator (curve setting only) | SO | | x | |
| 405 | Combustibile 1 - Curve controllo servocomando aria (A): si accede alla lista dei punti da impostare (da P0 a P9) - consultare paragrafo “Impostazione curve” | Fuel 1: Ratio control curves air actuator (curve setting only) | SO | | x | |
| 406 | Combustibile 1 - Curve controllo inverter (F + A): si accede alla lista dei punti da impostare (da P0 a P9) - consultare paragrafo “Impostazione curve” | Fuel 1: Ratio control curves VSD (curve setting only) | SO | | x | |

## *Block 500: Air/fuel ratio control*

| Param. | Descrizione | Description | Password | LMV20<br>LMV27 | LMV26 | LMV37 |
|---|---|---|---|---|---|---|
| 501 | Posizione **servocomando combustibile** in assenza di fiamma (no-flame)<br>**Indice 0** = posizione di sosta = 0°<br>**Indice 1** = posizione preventilazione = 0°<br>**Indice 2** = posizione postventilazione = 15° | No-flame position fuel actuator<br>**Index 0** = no-load position = 0°<br>**Index 1** = prepurge position = 0°<br>**Index 2** = postpurge position = 15° | OEM / Service | x | x | x |
| 502 | Posizione **servocomando aria** in assenza di fiamma (no-flame)<br>**Indice 0** = posizione di sosta = 0°<br>**Indice 1** = posizione preventilazione = 90°<br>**Indice 2** = posizione postventilazione = 45° | No-flame position air actuator<br>**Index 0** = no-load position = 0°<br>**Index 1** = prepurge position = 90°<br>**Index 2** = postpurge position = 45° | OEM / Service | x | x | x |
| 503 | **% giri motore con inverter** 0% = ventilatore fermo, 100% = ventilatore al massimo della velocità<br>**Indice 0** = posizione di sosta = 0%<br>**Indice 1** = posizione preventilazione = 100%<br>**Indice 2** = posizione postventilazione = 50% | No-flame speeds VSD<br>Index 0 = no-load speed = 0%<br>Index 1 = prepurge speed = 100%<br>Index 2 = postpurge speed = 50% | OEM / Service | | x | x |
| 504 | Combustibile 1 - Posizione **servocomando combustibile** in assenza di fiamma (no-flame)<br>**Indice 0** = posizione di sosta = 0°<br>**Indice 1** = posizione preventilazione = 0°<br>**Indice 2** = posizione postventilazione = 15° | Fuel 1<br>No-flame position fuel actuator<br>**Index 0** = no-load position = 0°<br>**Index 1** = prepurge position = 0°<br>**Index 2** = postpurge position = 15° | OEM / Service | | x | |
| 505 | Combustibile 1 - Posizione **servocomando aria** in assenza di fiamma (no-flame)<br>**Indice 0** = posizione di sosta = 0°<br>**Indice 1** = posizione preventilazione = 90°<br>**Indice 2** = posizione postventilazione = 45° | Fuel 1<br>No-flame position air actuator<br>**Index 0** = no-load position = 0°<br>**Index 1** = prepurge position = 90°<br>**Index 2** = postpurge position = 45° | OEM / Service | | x | |
| 506 | Combustibile 1 - **% giri motore con inverter** 0% = ventilatore fermo, 100% = ventilatore al massimo della velocità<br>**Indice 0** = posizione di sosta = 0%<br>**Indice 1** = posizione preventilazione = 100%<br>**Indice 2** = posizione postventilazione = 50% | Fuel 1<br>No-flame speeds VSD<br>Index 0 = no-load speed = 0%<br>Index 1 = prepurge speed = 100%<br>Index 2 = postpurge speed = 50% | OEM / Service | | x | |
| 522 | Tempo rampa di salita inverter | Ramp up | OEM / Service | | x | x |
| 523 | Tempo rampa di discesa inverter | Ramp down | OEM / Service | | x | x |

| | | | | | | |
|---|---|---|---|---|---|---|
| 542 | Activation of VSD / PWM fan (PWM = Pulse-Width Modulation)<br>0=deactived 1=actived | Activation of VSD / PWM fan<br>(PWM = Pulse-Width Modulation) | OEM / Service | | x | x |

| | | | Parameter 544 | | | | | | |
|---|---|---|---|---|---|---|---|---|---|
| | | | Modulation **32s** | Modulation **48s** | Modulation **64s** | Modulation **80s** | | | |
| 544 | Actuator | Actuating speed parameter 613 | Max. delta between the curve points | | | | OEM / Service | x | x | x |
| | Actuator (<= 5Nm) | 5s / 90° | 31° | 46° | 62° | 77° | | | | |
| | Actuator **SQM33.7** | 17s / 90° | **9° (1)** | 13° | 18° | 22° | | | | |

(1) in this case the max. position of 90° can't be reached

| | | | | | | |
|---|---|---|---|---|---|---|
| 545 | Percentuale minima di carico per modulazione (valore fabbrica = n.d. - range impostazione:20%-100%) | Lower load limit (default value = n.d. - range:20%-100%) | OEM / Service | x | x | x |
| 546 | Percentuale massima di carico per modulazione (valore fabbrica = n.d. - range impostazione:20%-100%) | Higher load limite (default value = n.d. - range:20%-100%) | OEM / Service | x | x | x |
| 565 | Combustibile 1 - Percentuale minima di carico per modulazione (valore fabbrica = n.d. - range impostazione:20%-100%) | Fuel 1<br>Lower load limit (default value = n.d. - range:20%-100%) | OEM / Service | | x | |
| 566 | Combustibile 1 - Percentuale massima di carico per modulazione (valore fabbrica = n.d. - range impostazione:20%-100%) | Fuel 1<br>Higher load limite (default value = n.d. - range:20%-100%) | OEM / Service | | x | |

***Block 600: Actuators***

| Param. | Descrizione | Description | Password | LMV20<br>LMV27 | LMV26 | LMV37 |
|---|---|---|---|---|---|---|
| 601 | Impostazione punto di riferimento<br>**Indice 0** = combustibile<br>**Indice 1** = aria<br>**0** = chiuso (<0°)<br>**1** = aperto (>90°) | Selection of reference point<br>**Index 0** = fuel<br>**Index 1** = air<br>**0** = closed (<0°)<br>**1** = open (>90°) | OEM | x | x | x |
| 602 | Direzione rotazione del servocomando<br>**Indice 0** = combustibile<br>**Indice 1** = aria<br>**0** = antiorario<br>**1** = orario<br>VEDI MESSAGGIO DI “ATTENZIONE” RIPORTATO SOTTO. | Actuator’s direction of rotation<br>**Index 0** = fuel<br>**Index 1** = air<br>**0** = counterclockwise<br>**1** = clockwise<br>SEE “WARNING” MESSAGE QUOTED BELOW. | OEM | x | x | x |
| 606 | Limite tolleranza per monitoraggio posizione (0.1°)<br>**Indice 0** = combustibile<br>**Indice 1** = aria | Tolerance limit of position monitoring (0.1°)<br>**Index 0** = fuel<br>**Index 1** = air | OEM / Service | x | x | x |
| 608 | Combustibile 1 - Impostazione punto di riferimento<br>**Indice 0** = combustibile<br>**Indice 1** = aria<br>**0** = chiuso (<0°)<br>**1** = aperto (>90°) | Fuel 1 :<br>Selection of reference point<br>**Index 0** = fuel<br>**Index 1** = air<br>**0** = closed (<0°)<br>**1** = open (>90°) | OEM | | x | |
| 609 | Combustibile 1 - Direzione rotazione del servocomando<br>**Indice 0** = combustibile<br>**Indice 1** = aria<br>**0** = antiorario<br>**1** = orario<br>VEDI MESSAGGIO DI “ATTENZIONE” RIPORTATO SOTTO. | Fuel 1 :<br>Actuator’s direction of rotation<br>**Index 0** = fuel<br>**Index 1** = air<br>**0** = counterclockwise<br>**1** = clockwise<br>SEE “WARNING” MESSAGE QUOTED BELOW. | OEM | | x | |
| 610 | Combustibile 1 - Limite tolleranza per monitoraggio posizione (0.1°)<br>**Indice 0** = combustibile<br>**Indice 1** = aria | Fuel 1 :<br>Tolerance limit of position monitoring (0.1°)<br>**Index 0** = fuel<br>**Index 1** = air | OEM / Service | | x | |

| | | | | | | |
|---|---|---|---|---|---|---|
| 611 | Tipo di riferimento dei servocomandi<br>index 0 = fuel (default = 0 (riferimento standard)<br>index 1 = air (default = 0 (riferimento standard)<br>0 = standard<br>1 = fermo entro il raggio utile<br>2 = fermi interni (SQN1...)<br>3 = entrambi | Type of referencing<br>Index 0 = fuel<br>Index 1 = air<br>0 = standard<br>1 = stop within usable range<br>2 = internal stop (SQN1...)<br>3 = both | OEM | x | x | x |
| 612 | Combustibile 1 - Tipo di riferimento del servocomando combustibile<br>0 = standard<br>1 = fermo entro il raggio utile<br>2 = fermi interni (SQN1...)<br>3 = entrambi | Fuel 1:<br>Type of reference for fuel actuator<br>0 = standard<br>1 = range stop in the usable range<br>2 = internal range stop (SQN1…)<br>3 = both | OEM | | x | |
| 613 | Tipo di servocomando<br>**Indice 0** = combustibile<br>**Indice 1** = aria<br>0 = 5s / 90° (1Nm, 1,2Nm, 3Nm)<br>1 = 10s / 90° (6Nm)<br>2 = 17s / 90° (10Nm) | Type of actuator<br>**Index 0** = fuel<br>**Index 1** = air<br>0 = 5 s / 90° (1Nm, 1,2Nm, 3Nm)<br>1 = 10 s / 90° (6Nm)<br>2 = 17 s / 90° (10Nm) | OEM | x | x | x |
| 614 | Combustibile 1 :Tipo di servocomando<br>**Indice 0** = combustibile<br>**Indice 1** = aria<br>0 = 5s / 90° (1Nm, 1,2Nm, 3Nm)<br>1 = 10s / 90° (6Nm)<br>2 = 17s / 90° (10Nm) | Fuel 1 : Type of actuator<br>**Index 0** = fuel<br>**Index 1** = air<br>0 = 5 s / 90° (1Nm, 1,2Nm, 3Nm)<br>1 = 10 s / 90° (6Nm)<br>2 = 17 s / 90° (10Nm) | OEM | | x | |
| 641 | Attivazione procedura di standardizzazione inverter (riferirsi al codice errore 82)<br>0 = standardizzazione disattivata<br>1 = standardizzaione attivata | Control of speed standardization of VSD Error diagnostics of negative values (refer to error code 82)0 = no speed standardization 1 = speed standardization active | | | x | x |

| | | | | | | |
|---|---|---|---|---|---|---|
| 645 | Configurazione uscita analogica % di carico (valore fabbrica = 0)<br>**0** = DC 0..10 V<br>**1** = DC 2..10 V<br>**2** = DC 0/2..10 V | Configuration of analog output (default value = 0)<br>**0** = DC 0..10 V<br>**1** = DC 2..10 V<br>**2** = DC 0/2..10 V | OEM / Service | **LMV27** | x | x |

| | |
|---|---|
| ⚠ | **ATTENTION:** as for SQM3x actuators, set the direction according to the acutator function. As far as SQN1x actuators, set **always** the counterclockwise direction, independently from the model chosen for the specific function. |

### *Block 700: Error history*

| Param. | Descrizione | Description | Password |
|---|---|---|---|
| 701 | Storico errori: 701 - 725.01.codice | Error history: 701 - 725.01.code | Service / Info |
| ° | Storico errori: 701 - 725.02.codice diagnostico | Error history: 701 - 725.02.diagnostic code | Service / Info |
| ° | Storico errori: 701 - 725.03.classe errore | Error history: 701 - 725.03.error class | Service / Info |
| ° | Storico errori: 701 - 725.04.fase | Error history: 701 - 725.04.phase | Service / Info |
| ° | Storico errori: 701 - 725.05.contatore avvii | Error history: 701 - 725.05.startup counter | Service / Info |
| 725 | Storico errori: 701 - 725.06.carico | Error history: 701 - 725.06.load | Service / Info |

***Block 900: Process data***

| Param. | Descrizione | Description | Password |
|---|---|---|---|
| 903 | Potenza attuale (valore fabbrica = 0% - range impostazione = 0-100%)<br>**Indice 0** = combustibile<br>**Indice 1** = aria | Current output (default value = 0% - range = 0-100%)<br>**Index 0** = fuel<br>**Index 1** = air | Service / Info |
| 922 | Posizione incrementale servocomandi (valore fabbrica = 0% - range impostazione = -50% - 150%)<br>**Indice 0** = combustibile<br>**Indice 1** = aria | Incremental position of actuators (default value = 0% - range = -50% - 150%)<br>**Index 0** = fuel<br>**Index 1** = air | Service / Info |
| 935 | Giri motore assoluti | Absolute speed | OEM / Service |
| 936 | Giri motore in fase standardizzazione | Standardized speed | Service / Info |
| 942 | Sorgente potenza attiva | Active load source | OEM / Service |
| 945 | Solo con **LMV26:**<br>Combustibile attuale<br>0 = combustibile 0<br>1 = combustibile 1 | Actual fuel<br>0 = fuel 0<br>1 = fuel 1 | Service / Info |
| 947 | Risultato interrogazione contatti (codifica bit) | Result of contact sensing (bit-coded) | Service / Info |
| 950 | Stato relè (codifica bit) | Required relay state (bit-coded) | Service / Info |
| 954 | Intensità di fiamma ( 0% ÷ 100%);<br>minima corrente 30% = 4µA;<br>massima corrente100% = 16µA;<br>massima corrente ammissibile = 40µA. | Intensity of flame (range = 0% - 100%)<br>minimum current 30% = 4µA;<br>maximum current100% = 16µA;<br>maximum current possible = 40µA. | Service / Info |
| 961 | Stato moduli esterni e display | Status of external modules and display | Service / Info |
| 981 | Errore memoria: codice | Error memory: code | Service / Info |
| 982 | Errore memoria: codice diagnostica | Error memory: diagnostic code | Service / Info |
| 992 | Flag di errore | Error Flags | OEM / Service |

### *Actuators references*

An incremental transducer is used to ensure position feedback. Referencing of the actuators must be performed after power-on. In addition, at the end of each shutdown in phase 10, the actuators are referenced to ensure that individual stepping errors, which could lead to shutdown, do not accumulate. If a position error occurs, the system switches to the safety phase (phase 01), enabling the actuators with detected position errors to be referenced. During the following phase 10, the only actuators that are referenced are those that were not referenced before in the safety phase (phase 01). The position of the reference point can be selected depending on the type of burner design, either the CLOSED position (<0°) or the OPEN position (>90°).

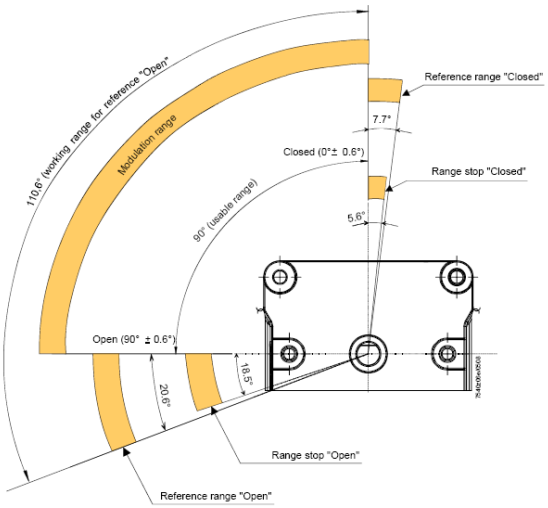


| Param. | Descrizione | Description | Password |
|---|---|---|---|
| 601 | Impostazione punto di riferimento<br>**Indice 0** = combustibile<br>**Indice 1** = aria<br>**0** = chiuso (<0°)<br>**1** = aperto (>90°) | Selection of reference point<br>**Index 0** = fuel<br>**Index 1** = air<br>**0** = closed (<0°)<br>**1** = open (>90°) | OEM |

If the acutators position is exchanged (error code: 85), the burner will lockout and will try to adjust for three times, then it will lock out.

### *Gas proving system*

Valve proving is only active when firing on gas. This is a leakage test designed to detect leaking gas valves and, if necessary, to prevent the valves from opening or ignition from being switched on. Lockout is initiated. When performing valve proving, the gas valve on the burner side is opened first to bring the test space to atmospheric pressure. Then, the valve is closed whereupon the pressure in the test space must not exceed a certain level, measured by the gas leakage pressure switch (PGCP). Then, the gas valve on the mains side is opened to fill the gas pipe. When the valve is closed again, the gas pressure must not drop below a certain level. Valve proving can be parameterized to take place on startup, shutdown, or on both phases.

### *Air-fuel curve points*

There are 10 air-fuel curve points: T

P0 = ignition position. Only for ignition; after the ignition, the burner works between Point P1 (low flame) and point P9 (high flame) without going back to P0.

P0 can be set everywhere irrespective of all the other points.

## COMMISSIONING THE BURNER

The LMV2x complete programming must be performed on units that has never been set before or reset units (e.g. spare parts).
The programming procedure is performed by setting the following main parameters:

1 if LMV.. is a spare part, insert burner ID (parameter **113**) at least 4 digit.
2 type of fuel train (parameter "**201**")
3 air/fuel ratio curvepoints (Block "**400**")
4 maximum load percentage (parameter "**546**")
5 minimum load percentage (parameter "**545**")

| | |
|---|---|
| ⚠ | CAUTION: if an error message as "Loc.." appears when the unit is turned to on for the first time, press ENTER (InFo) until the "Reset" message apperas. After few seconds, the message "OffUpr" will be displayed. |

This message shows that the unit has not been programmed before or that the operating mode (fuel train) is not set yet or that the unit has not been completely programmed. Pree keys **F** (Fuel) and **A** (Air) at the same time unitl the display shows **code** and next it will show 7 bars the first on the left is flashing. If the display shows "Off", it means that the unitis already set, then see the instructions on chapter "Adjsuting the burner with LMV2x already programmed").

At the first LMV startup, the AZL display will show

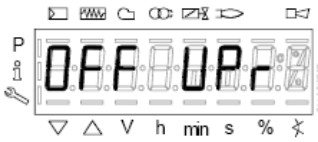


It means that the unit was never set or that no mode was chisen or that some parameters have to be set furthert.
Push F (fuel) and A (Air) together untilthe display shows **code** and then a 7 digit dashed line blinking on the left.

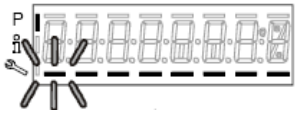

Press the "**+**" key until the first character of the password (the default password is 9876), then press **ENTER (InFo)**, the character now turn to a bar while the second bar starts flashing. Press "**+**" until the second character is entered, then press **ENTER (InFo)**.
Repeat the procedure until the last character si set, then press **ENTER (InFo)**, then **ENTER** again until the message **PArA** appears: then the first parameters block ("**400**") will be shown:

Press **ENTER (InFo)** again, to gain access to programming the operating mode (fuel train):

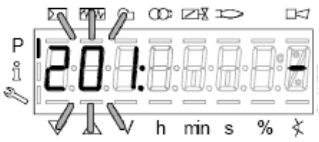


In the example, set configuration **1** = direct gas ignition (G mod).
Other possibilities are below listed:

the types of fuel trains are the following:

| Param. | Descrizione | Description | Password |
|---|---|---|---|
| 201 | Modalità funzionamento bruciatore ( rampa comb., mod. / multistadio, servocom., ecc.)<br>__= non definito (cancellazione curve)___=<br>**1** = accensione diretta a gas (G mod)<br>**2** = accensione tramite pilota gas con attacco tra le due elettrovalvole EV1/EV2 gas (Gp1 mod)<br>**3** = accens. tramite pilota gas con attacco a monte dell'elettrov. EV1 del gas (Gp2 mod)<br>**4** = accensione a gasolio - modul. (Lo mod)<br>**5** = accens. a gasolio - bistadio (Lo 2 stage)<br>**6** = accens. a gasolio - tristadio (Lo 3 stage) | Burner operating mode (fuel train, mod / multi-stage, actuators, etc.)<br>__= undefined (delete curves)<br>**1** = gas direct ignition(G mod)<br>**2** = gas pilot ignition with connection between the two gas solenodi valves EV1/EV2 (Gp1 mod)<br>**3** = gas pilot ignition with connection upstrem the gas solenoid valve EV1 (Gp2 mod)<br>**4** = Light Oil - modulating (Lo mod)<br>**5** = Light Oil - 2stages (Lo 2 stage)<br>**6** = Light Oil - 3stages (Lo 3 stage) | OEM / Service |

G mod

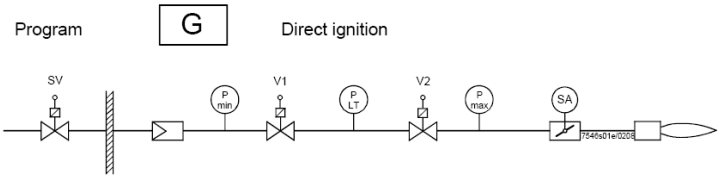


Gp1 mod

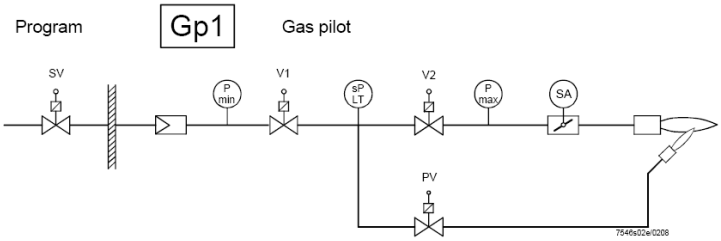


Gp2 mod

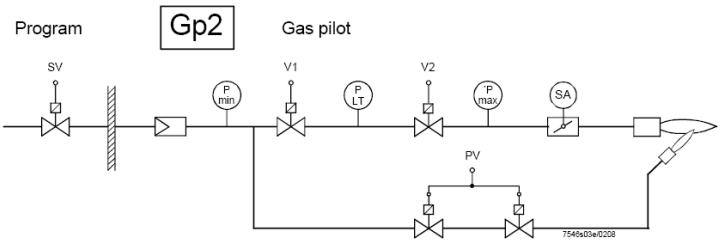


Lo mod

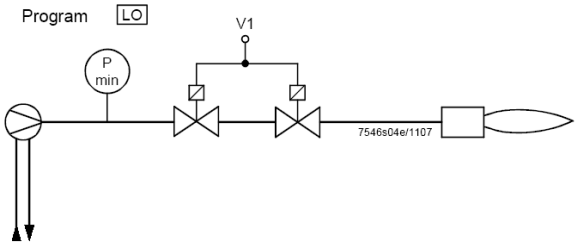


Lo 2-stage

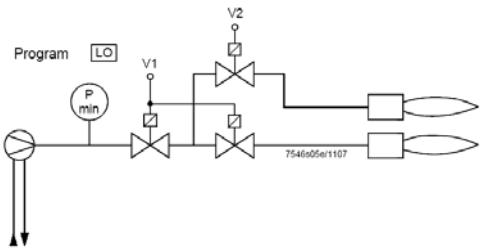

Lo 3-stage

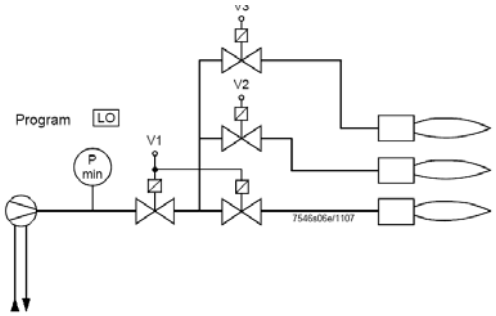


In the example the Gmod gas train has been set (Configuration “1”).
Choose the fuel train by pressing ENTER, then press “**+**” / “**-**”. Press ENTER to confirm: number “1” will appear on the right side of the display.

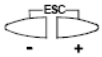

Then press ESC

to quit. The following display is:

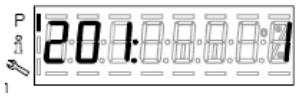


Press “**+**” to show the first point to be set P0.

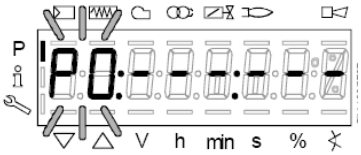


Press **F** and **“+”** to increase the opening angle of the fuel actuator “**0F”** until the requested value is reached (for example 12°÷15°, see below) for the ignition point; or press **F** and **“-”** to decrease the angle:

To set the air damper opening angle “0A” in the ignition point (10° for example - see below), press “A” and “+” “A” and “-” at the same time:

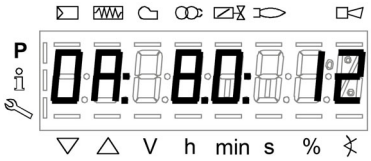


LMV37:
Now the air and fuel quantities are set at the ignition point P0:
By pressing “+”, point P9 can be programmed to set the air and fuel values at the maximum output

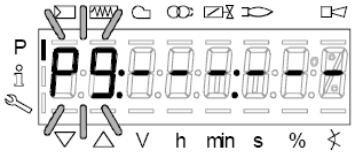


go on as described above to the the opening angles of the air actuator (A) and fuel actuator (F):

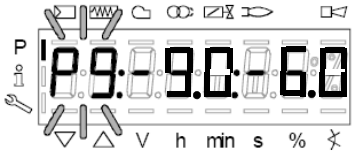


| | |
|---|---|
| ⚠ | **CAUTION:** at the first burner adjustment, it is recommended to set the maximum output P9 at the same value (or little higher) of the ignition point, in order to safely reach point P9 next (see next paragraph). |

By pressing “+” the display will show:

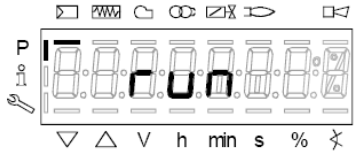


The burner is ready to startup. Now it is possible to re-set the curve points while the burner is operating (“warm setting”) by pressing the ENTER (InFo) or while the burner is in stand-by mode (“cold setting”) by pressing ENTER .

### *Warm setting*

1 Once pressed button **"enter"** and the chain thermostats open (X5-03 terminals), the LMV.. show Ph12.Then close the chain termostat and the unit performs the prepurge cycle (see "Phases List") and stops at the ignition point P0 without ignition anyway.

2 By pressing "+", the burners lights abd the air/fuel ratio can be properly set in presence of flame.

3 By pressing "+" again, the next point P1 is shown (eqaul to P0 as the unit automatically set P0=P1);

4 By pressing "+" again, the "Calc" message will be displayed: the unit is processing the sir/fuel ratio curvepoints until point P9, previuosly set. Once the processing is perfomed the calculated point P2 is shown.By pressing "+" again, the "Calc" message will be displayed: the unit is processing the sir/fuel ratio curvepoints until point P9, previuosly set. Once the processing is perfomed the calculated point P2 is shown.

5 By pressing "+", it is possible to go through the processed curve until point P9 is reached.

**Note:** if the point doesn't blink, servomotors are still running.

6 n order to set P9 with the gas flow rate according to the generator needs, follow this procedure:

**Note: the purpose is to fully open the gas throttle and later on to adjust the gas flow rate through the gas pressure governor.**

- Operate smoothly opening by just a few degrees the air damper and later on increasing the gas throttle opening it by a few degrees. Keep monitoring the flue through the flue analyser. Keep the air excess inside normal figures (from 3% to 7% residual O2) operating by means for the air damper servomotor;
- Keep increasing the air damper opening and then the gas throttle, as done in the sequence above, remebering to get the full firing rate wih the gas throttle fully open (or the oil pressure regulator at its maximum pressure position).

See example below:

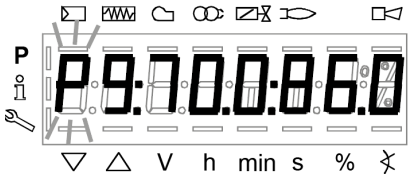


- If, while opening the gas throttle, the gas flow rate was too high, reduce it only through the gas governor and keep opening the throttle until the 60÷70° position is got.
- If the gas train is equipped with a governor and a valve with an adjustable gas flow rate, fully open also this last valve, smoothly! The gas flow rate is always set by means of the governor.

7 As soon as all the devices are fully open, set the gas flow rate through the governor.

8 Set the air damper position in order to get the reccomended air excess (3÷4.8% O2 on gas and 2.9÷4.9 % on oil).

**Note1**: on high flame, if the gas flow rate is changed by means of the governor, all the other points below high flame must be checked again.

9 After having set the high flame point P9, keep "-" pressed for some seconds unitl "Calc" is displayed in order to have the LMV recalculating all the points:

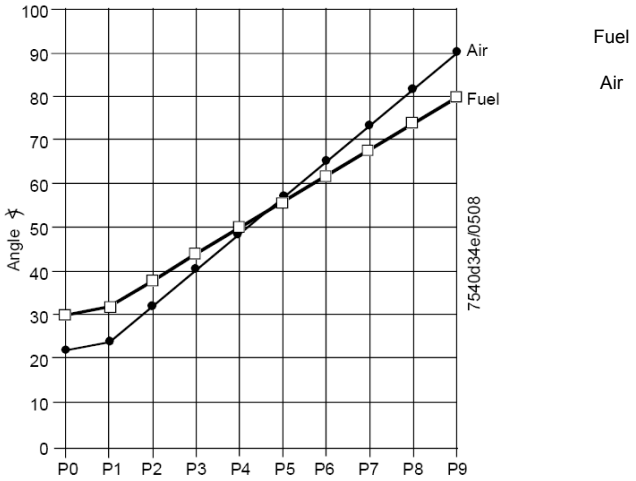


10 the unit will automatically reach point P8 processed: check the combustion values in this point and, if necessary, change it.

11 Press "-" to go down to the lower points and check the combustion values, change the points if necessary.

**Note:** if in an intermediate point (for example P5), the change of the actuators position is important according to the processed point

P5, keep pressing “-” unitl “Calc” is displayed. The curve will be processed again downwards point P1.

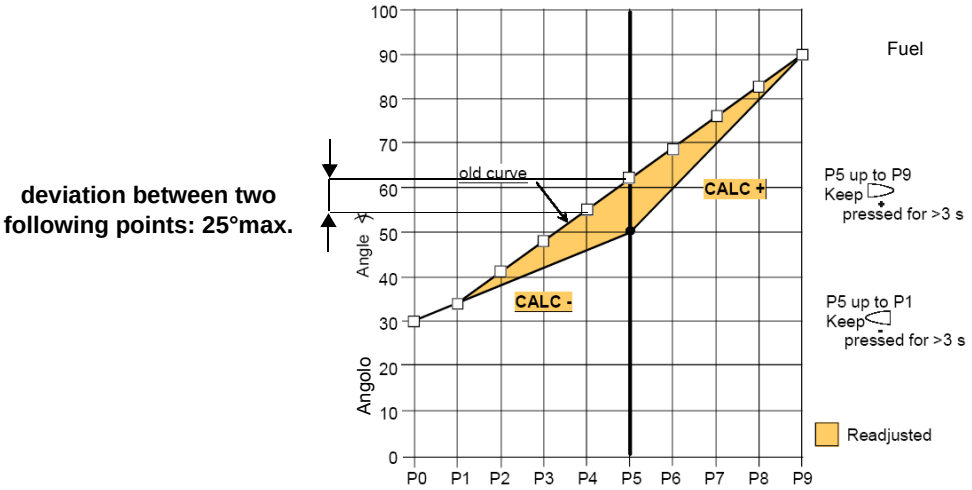


12 press “-” to go through the lower points and check the combustion values, if necessary change the points as described above.

13 By pressing ESC, at the end of the points adjusments, the parameter “**546”** (setting the maximum load) will be displayed; press ENTER (InFo), then “+” until 100%, then press ENTER (InFo) again, ESC and then “+”.

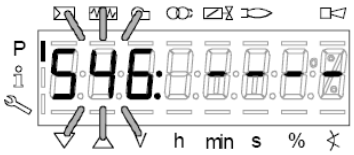


14 The parameter “**545”** (setting the minimum load) is displayed: press ENTER (InFo), then “+” until 20%. Press ENTER, then press ESC for three times. The message “oP” will be displayed as well as the load percentage at the burner is working on.

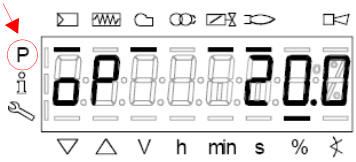


he hyphen related to the symbol “P” (highlited in the picture) will be off to show that the unit exited the programmig mode. The burner will then work automatically, following the curve set.

.**Note1:** if the curvepoints settings is quit before end (by pressing ESC or for a faulty shutdown), the message “OFF UPr” (Start prevention) will be diplayed until all the curvepoints will be set.

**Note2:** if the gas flow rate at high flame point (maximum load) is changed by means of the pressure stabiliser, all the curvepoints must be checked by going through the curve downwards and resetting them if necessary.

**Note3:** if the point does not flash, it means thet the actuators have not reached the set position yet.

**Note4:** if an error occurs causing a safety shutdwon during the processing of the curve, the processing itself will be interrupted.

### *Cold setting*

The ”cold setting“ (without flame) can be performed only when all the curve points values are known (for instance, in case of replacement).

| | |
|---|---|
| ⚠ | **When the burner is off, if you modify one curve set point, when the burner restarts the AZL2x shows OFF UPr (OFF UPr0 or OFF UPr1 for LMV26). The LMV.. then, requires a new "warm" startup (see procedure paragraph "Warm Setting”) by checking again all points of curve from P0 to P9.** |

## BURNER STARTUP WITH LMV2x ALREADY PROGRAMMED

Once the LMV turns on, the AZL display will show

The burners is basically factory set. The air/fuel ratio curve is set with the maximum output point P9 a little higher or equal to P0. To adjust the burner on the plant site, adjust the maximum output point to the flow rate values really requested. Then go through the curve-points, by pressing “+” several times to reach point P9: then adjust the air actuator position (for the air damper) and the fuel acttuator (for the butterfly valve, in case of gas or the oil pressure governor incase of oil), by adjusting the fuel flow rate by means of the gas pressure stabiliser (for gas) or the oil pressure governor (for oil), checking the combustion valeus contemporarly. Once the burner is adjusted at the maximum output, press “-” for more than 5 seconds to process the curve downwards. The curve is then a straight line: go on checking the combustion values point by point; change them if necessary and in case linearise the curve again.

Before starting the burner up, press **F** and **A** at the same time

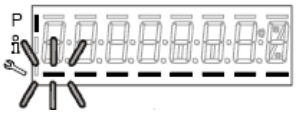

enter the password following the procedure on chapter “Programming LMV2x”.

Press ENTER until the display will show:

Press ENTER again: it will show

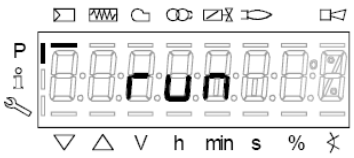


press ENTER (InFo)

: the display will show phase 12.

Ph12: *Standby* phase (stationary)

Ph12: *Standby* phase (stationary)

By closing the thermostatic series, the burner startup cycle will take place:

Ph22: *Fan ramp up* phase (fan motor = ON, safety shutoff valve = ON)

Ph24: *Traveling to prepurge position* phase

Ph30: *Prepurge* phase

Ph36: *Traveling to ignition position* phase

Ph38: *Preignition* phase

Ph40: *1st safety time* phase (ignition transformer ON)

Ph42: *1st safety time* phase (ignition transformer OFF), preignition time OFF

Ph44: *Interval1*

The startup sequence stops at phase 44.

**The burners is lit and is in“P1” position (low flame point):**

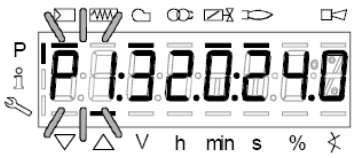


Set the air/fuel ratio curvepoints as described on chapter “Programming the LMV2x”

**Note:** the other phases are
Ph60 = operation (OP= in modulation)
Ph62 = travelling to shutdown
Ph70 = off but in prepurge after the burntime
Ph72 = travelling to postpurging
Ph74 = postpurge (countdown is displayed)

Press ESC the parameter “**546**” (Setting the maximum load) is displayed

Then press to exit the programming mode.
The display will show:

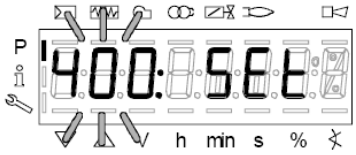


Press for a second time: the display will show the load percentage the burner is working at.

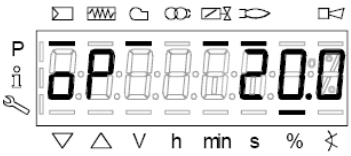


When the generator reaches the programmed set-point, the burner will be in stand-by: the display will show

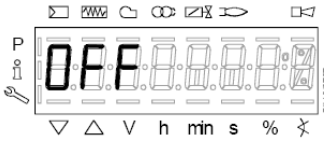

### *Reset / manual lockout*

The system can be manually locked by simultaneously pressing the **ENTER (InFo)** button and **any other button** on the AZL2.... This function allows the user to stop the system from the operating level should an emergency occur. When making a reset, the following actions are carried out:

- Alarm relay and the fault display are off
- the lockout position is cancelled
- the unit performs a reset, then it switches to stand-by

If the unit is in the lockout position, a reset can be made by pressing the **InFo** button for 1…3 seconds. The function is available only when the unit is in the lockout position. Longer or shorter pushes on the button do not produce a reset so that the system maintains the lockout position.

| Codice errore / Error code | Codice diagnostico / Diagnostic code | Descrizione / Meaning |
|---|---|---|
| 167 | 2 | / Manual lockout via AZL2… |

### *Timeout for menu operation*

The time for automatically leaving the parameter setting level can be adjusted between 10 and 120 minutes, using the parameter 127 (Timeout for menu operation). If, during that period of time, there is no operation via the AZL2..., the parameter setting level is quit and the password level reset to *Info / Service*.

**Caution! In addition, this timeout or interruption of communication between the LMV2.. and the AZL2... during the time the curves are set leads to lockout!**

| Codice erroreC Error code | Codice diagnostico Diagnostic code | DescrizioneMeaning |
|---|---|---|
| 167 | 8 | Manual locking |

### *Entering the Parameter levels*

By means of a proper use of the keys, it is possible to enter the various level parameters, as shown in the following flow chart:

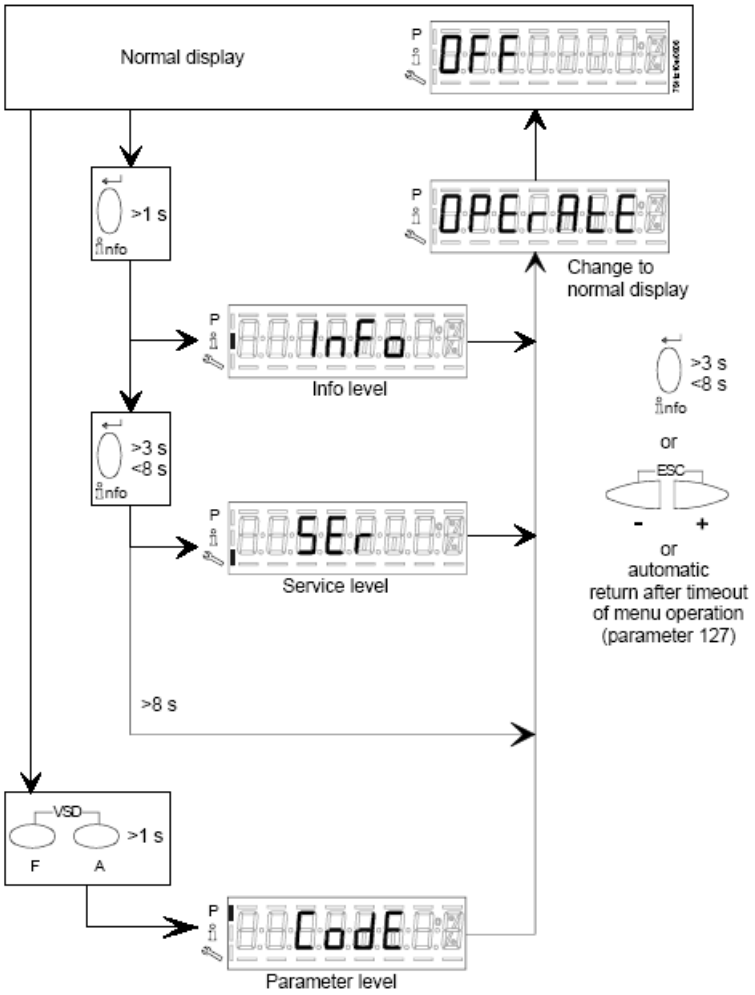


The burner and consequently the LMV2x.. are factory set; the air and fuel curves as set as well.

### *Info level*

To enter the **Info** level, proceed as follows:

1 in any menu position, press keys **+** and **-** at the same time, then the program will start again: the display will show **OFF**.

2 , until the display will show **InFo**, Press the **enter (InFo)** key

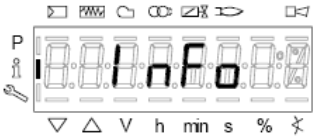


3 then il will show the first code (167) flashing, on the right side it will show the data entered. By pressing **+** or **-** it is possible to scroll (up or down) the parameter list.

4 If a dot-line is shown on the right, there is no enough room for complete visualisation: press **enter** again the data will be completely shown for 1 to 3 seconds. By pressing **enter** or **+** and**-** at the same time, the system will exit the parameter visualisation and go back to the flashing number.The **Info** level shows some basic parameters as:

| ***Parameter*** | ***Description*** |
|---|---|
| 167 | Cubic meters of fule (resettable) |
| 162 | Operating hours (resettable) |
| 163 | Device operating hours |
| 164 | Burners start-ups (resettable) |
| 166 | Total number of start-ups |
| 113 | Burner number (i.e. serial number) |
| 107 | Software version |
| 102 | Software date |
| 103 | Device serial number |
| 104 | Customer code |
| 105 | Version |
| 143 | Free |

5 Example: choose parameter 102 to show the date

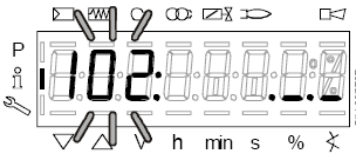


the display shows parameter **102** flashing on the left and characters **._._** on the right.

6 press InFo for 1-3 seconds: the date will appear

7 press InFo to go back to parameter “102”

8 by pressing + / -, it is possible to scroll up/down the parameter list (see table above), or, by pressing ESC or InFo for more seconds, the display will show

9 Once the last parameter is accessed (143) by pressing **+** , the **End** message will flash.

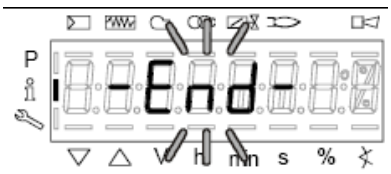

10 Press **InFo** for more than three seconds or for more than three seconds orto return to the normal display.

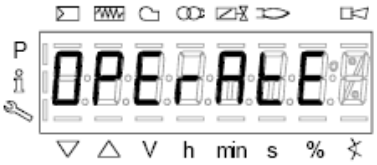


If a message like the one below is shown during operation,

it means that the burner is locked out and the Errore code is shown (in the example “error code:4”); this message is alternating with another message

Diagnostic code (in the example “diagnostic code:3”). Record the codes and find out the fault in the Error table
To perform the reset, press InFo for one second:

The unit displays an event which does not lead to shutdown.
The display shows current error code **c:** alternating with diagnostic code **d**:

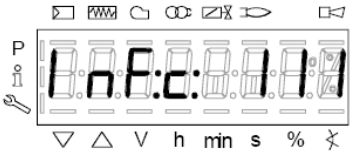


.
Press **InFo** to return to the display of phases.
Example: Error code **111** / diagnostic code 0

To reset, press InFo for a second. Record the codes and check the Error List to find the type of faults.

### *Service level*

To enter the Service mode, press InFo until the display will show:

The service level shows all the information about flame intensity, actuators position, number and lock codes:

| *Parameter* | *Description* |
|---|---|
| 954 | Flame intensity |
| 121 | % output, if set = automatic operation |
| 922 | Actuators position, 00=combustibile; 01= aria |
| 161 | Lock-outs number |
| 701..725 | Lock-outs History (see chapter 23 in the LMV2x manual) |

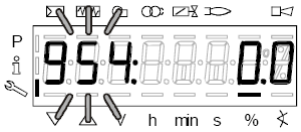


1 the first parameter will be “954”: the percentage of flame is shown on the right. By pressinf + or - it is possible to scroll up/down the parameter list.

2 Once the last parameter is accessed (143) by pressing **+** , the **End** message will blink.

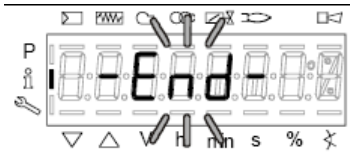


3 Press **InFo** for more than three seconds or  for more than three seconds orto return to the normal display.

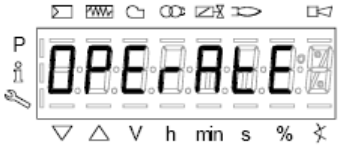

## PHASES LIST

| Fase /Phase | Funzione | Function |
|---|---|---|
| Ph00 | Fase blocco | Lockout phase |
| Ph01 | Fase di sicurezza | Safety phase |
| Ph10 | t10 = tempo raggiungimento posizione riposo | t10 = home run |
| Ph12 | Pausa | Standby (stationary) |
| Ph22 | t22 = tempo di salita ventilatore (motore ventilatore = ON, valvola intercettazione di sicurezza = ON) | t22 = fan ramp up time (fan motor = ON, safety shutoff valve = ON) |
| Ph24 | Verso posizione preventilazione | Traveling to the prepurge position |
| Ph30 | t1 = tempo preventilazione | t1 = prepurge time |
| Ph36 | Verso posizione accensione | Traveling to the ignition position |
| Ph38 | t3 = tempo preaccensione | t3 = preignition time |
| Ph40 | TSA1 = primo tempo sicurezza (trasformatore accensione ON) | TSA1= 1st safety time (ignition transformer ON) |
| Ph42 | TSA1 = primo tempo sicurezza (trasformatore accensione OFF) | TSA1 = 1st safety time (ignition transformer OFF), t42 = preignition time OFF |
| Ph44 | t44 = intervallo 1 | t44 = interval 1 |
| Ph50 | TSA2 = secondo tempo sicurezza | TSA2 = 2nd safety time |
| Ph52 | t52 = intervallo 2 | t52 = interval 2 |
| Ph60 | Funzionamento 1 (stazionario) | Operation 1 (stationary) |
| Ph62 | t62 = massimo tempo bassa fiamma (funzionamento 2, in preparazione per spegnimento, verso bassa fiamma) | t62 = max. time low-fire (operation 2, preparing for shutdown, traveling to low-fire) |
| Ph70 | t13 = tempo postcombustione | t13 = afterburn time |
| Ph72 | Verso posizione postcombustione | Traveling to the postpurge position |
| Ph74 | t8 = tempo postventilazione | t8 = postpurge time |
| Ph80 | t80 = tempo evacuazione controllo tenuta valvole | t80 = valve proving test evacuation time |
| Ph81 | t81 = tempo perdita pressione atmosferica, prova atmosferica | t81 = leakage time test time atmospheric pressure, atmospheric test |
| Ph82 | t82 = test perdita, test riempimento | t82 = leakage test filling test, filling |
| Ph83 | t83 = tempo perdita pressione gas, test pressione | t83 = leakage test time gas pressure, pressure test |
| Ph90 | Tempo attesa “mancanza gas” | Gas shortage waiting time |

## BACKUP PARAMETER WITH AZL2x

On the AZL2x you can save the configuration to download on another appliance LMV.

To do this:

access up, press **F** and **A** at the same time

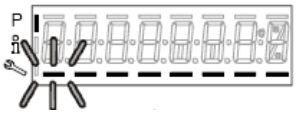

enter the password following the procedure on chapter “Programming LMV2x”.

Press ENTER until the display will show:

with the button go to the group **000** of the parameters and press ;with the buttons **+** and **-** go to **050** parameter

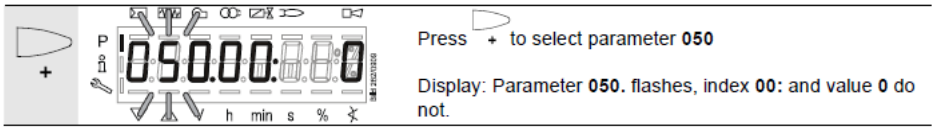


press the disply show


press again with the button **+** select **1** and start the backup process by pressing .

After about 5 seconds the backup process ends and the display shows 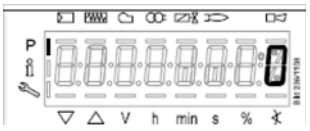


.

| | |
|---|---|
| ⚠ | **It is recommended that you perform a backup procedure whenever you change the parameters of the LMV for having a copy in AZL2x**! |

## RESTORE PARAMETER FROM AZL2x TO LMV..

To copy the previously saved configuration on AZL2x proceed as follows:
access up, press **F** and **A** at the same time

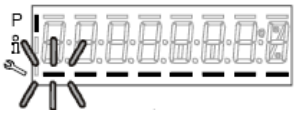

enter the password following the procedure on chapter “Programming LMV2x”.
Press ENTER until the display will show:

| | |
|---|---|
| ⚠ | **To copy the configuration from AZL2x to LMV. It is important that the type of LMV is the same (for example LMV20 with LMV20, etc.) and that 113 "Burner ID" of the burner is the same value that is saved in the configuration you want to copy.** |

With the buttons 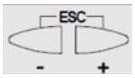 go to the group **100** of the parameters, press на 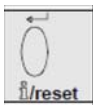 and always with the buttons **+** and **-** go to **113** parameter "Burner ID", press and verify (and/or change with buttons by pressing enter to confirm)

iWith the buttons 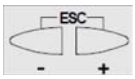 go to the group **000** of the parameters, press end select the **050** parameter

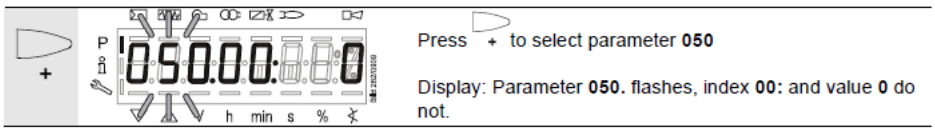


press the disply show

with the button 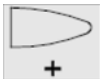 the display shows

press again with the button **+** select **1** and start the restore process by pressing .

After about 5 seconds the restore process ends and the display shows 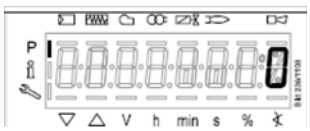 .
Now, LMV has the same configuration that was stored on AZL2x.

## *ERROR CODE TABLE*

| Error code | Diagnostic code | Meaning for the LMV2x/3x... system | Remedy |
|---|---|---|---|
| **no Comm** | | **No communication between LMV26... basic unit and AZL2...** | Check wiring for line interruption/loose contact |
| **2** | **#** | **No flame at the end of safety time (TSA)** | |
| | *1* | *No flame at the end of safety time 1 (TSA1)* | |
| | *2* | *No flame at the end of safety time 2 (TSA2)* | |
| **3** | **#** | Air pressure failure | |
| | *0* | *Air pressure off* | |
| | *1* | *Air pressure on* | |
| | *4* | *Air pressure on – prevention of startup* | |
| | *20* | *Air pressure, combustion pressure – start prevention* | |
| | *68* | *Air pressure, POC – start prevention* | |
| | *84* | *Air pressure, combustion pressure, POC – start prevention* | |
| **4** | **#** | **Extraneous light** | |
| | *0* | *Extraneous light during startup* | |
| | *1* | *Extraneous light during shutdown* | |
| | *2* | *Extraneous light during startup – prevention of startup* | |
| | *6* | *Extraneous light during startup, air pressure – start prevention* | |
| | *18* | *Extraneous light during startup, combustion pressure – start prevention* | |
| | *24* | *Extraneous light during startup, air pressure, combustion pressure – start prevention* | |
| | *66* | *Extraneous light during startup, POC – start prevention* | |
| | *70* | *Extraneous light during startup, air pressure, POC – start prevention* | |
| | *82* | *Extraneous light during startup, combustion pressure, POC – start prevention* | |
| | *86* | *Extraneous light during startup, air pressure, combustion pressure, POC – start prevention* | |
| **7** | **#** | **Loss of flame** | |
| | *0* | *Loss of flame* | |
| | *3...255* | *Loss of flame due to TÜV test (loss-of-flame test)* | Diagnostics corresponds to the period of time from shutdown of fuel valves to the detection of loss of flame (resolution 0.2 s → Value 5 = 1 s) |

| Error code | Diagnostic code | Meaning for the LMV20... system | Remedy |
|---|---|---|---|
| **12** | **#** | **Valve proving** | |
| | *0* | *Fuel valve 1 (V1) leaking*<br>*(fuel valve 2 with valve proving via X5-01)* | With valve proving via X5-01 (gas pressure switch-min)<br>- Check if valve on the burner side is leaking<br>- Check if pressure switch for valve proving is closed, if gas pressure exist<br>- Check wiring for short-circuit |
| | *1* | *Fuel valve 2 (V2) leaking*<br>*(fuel valve 1 with valve proving via X5-01)* | With valve proving via X5-01 (gas pressure switch-min)<br>- Check if valve on the gas side is leaking<br>- Check wiring for short-circuit |
| | *2* | *Valve proving not possible* | Valve proving activated, but pressure switch-min selected as input function for X9-04 (check parameters 238 and 241) |
| | *3* | *Valve proving not possible* | Valve proving activated, but no input assigned (check parameters 236 and 237) |
| | *4* | *Valve proving not possible* | Valve proving activated, but 2 inputs assigned (set parameter 237 to pressure switch-max or POC) |
| | *5* | *Valve proving not possible* | Valve proving activated, but 2 inputs assigned (check parameters 236 and 237) |
| | *81* | *V1 leaking* | Check to see if the valve on the gas side is leaking<br>Check wiring to see if there is an open-circuit |
| | *83* | *V2 leaking* | Check to see if the valve on the burner side is leaking<br>Check to see if the pressure switch for the leakage test is closed when gas pressure is present<br>Check wiring for short-circuit |
| **14** | **#** | **POC** | |
| | *0* | *POC open* | Check to see if the valve's closing contact is closed |
| | *1* | *POC close* | Check wiring<br>Check to see if the valve's closing contact opens when valve is controlled |
| | *64* | *POC open - start prevention* | Check wiring to see if there is a line interruption.<br>Check to see if the valve's closing contact is closed |
| **19** | *80* | *Combustion pressure, POC – start prevention* | Check to see if pressure switch has closed with no combustion pressure present<br>Check wiring for short-circuit |
| **20** | **#** | **Pressure switch-min (Pmin)** | |
| | *0* | *No minimum gas /oil pressure* | Check wiring for open-circuit |
| | *1* | *Gas shortage – start prevention* | Check wiring for open-circuit |
| **21** | **#** | **Pressure switch-max / POC** | |
| | *0* | *Pressure switch-max: Max. gas / oil pressure exceeded*<br>*POC: POC open (software version ≤ V02.00)* | Check wiring to see if there is a line interruption.<br>POC: Check to see if the valve's closing contact is closed. |

| Error code | Diagnostic code | Meaning for the LMV2x/3x... system | Remedy |
|---|---|---|---|
| **22 OFF S** | **#** | **Safety loop / burner flange** | |
| | *0* | *Safety loop / burner flange open* | |
| | *1* | *Safety loop / burner flange open - prevention of startup* | |
| | *3* | *Safety loop/burner flange, extraneous light – start prevention* | |
| | *5* | *Safety loop/burner flange, air pressure – start prevention* | |
| | *17* | *Safety loop/burner flange, combustion pressure – start prevention* | |
| | *19* | *Safety loop/burner flange, extraneous light, combustion pressure – start prevention* | |
| | *21* | *Safety loop/burner flange, air pressure, combustion pressure – start prevention* | |
| | *23* | *Safety loop/burner flange, extraneous light, air pressure, combustion pressure – start prevention* | |
| | *65* | *Safety loop/burner flange, POC – start prevention* | |
| | *67* | *Safety loop/burner flange, extraneous light, POC – start prevention* | |
| | *69* | *Safety loop/burner flange, air pressure, POC – start prevention* | |
| | *71* | *Safety loop/burner flange, extraneous light, air pressure, POC – start prevention* | |
| | *81* | *Safety loop/burner flange, combustion pressure, POC – start prevention* | |
| | *83* | *Safety loop/burner flange, extraneous light, combustion pressure, POC – start prevention* | |
| | *85* | *Safety loop/burner flange, air pressure, combustion pressure, POC – start prevention* | |
| | *87* | *Safety loop/burner flange, extraneous light, air pressure, combustion pressure, POC – start prevention* | |
| **50** | **#** | **Internal error** | Make a reset; if error occurs repeatedly, replace the unit |
| **51** | **#** | **Internal error** | Make a reset; if error occurs repeatedly, replace the unit |
| **55** | **#** | **Internal error** | Make a reset; if error occurs repeatedly, replace the unit |
| **56** | **#** | **Internal error** | Make a reset; if error occurs repeatedly, replace the unit |
| **57** | **#** | **Internal error** | Make a reset; if error occurs repeatedly, replace the unit |

| Error code | Diagnostic code | Meaning for the LMV2x/3x... system | Remedy |
|---|---|---|---|
| **58** | **#** | **Internal error** | Make a reset; if error occurs repeatedly, replace the unit |
| **61 Fuel Chg** | **#** | **Fuel changeover** | |
| *Fuel Chg* | *0* | *Fuel 0* | No error - change to Fuel 0 |
| *Fuel Chg* | *1* | *Fuel 1* | No error - change to Fuel 1 |
| **62 Fuel Err** | **#** | **Invalid fuel signals / fuel information** | |
| *Fuel Err* | *0* | *Invalid fuel selection (Fuel 0 + 1 = 0)* | Check wiring to see if there is an open-circuit<br>Note<br>Curves cannot be set. |
| *Fuel Err* | *1* | *Different fuel selection between the µCs* | Make a reset; if error occurs repeatedly, replace the unit |
| *Fuel Err* | *2* | *Different fuel signals between the µCs* | Make a reset; if error occurs repeatedly, replace the unit |
| *Fuel Err* | *3* | *Invalid fuel selection (Fuel 0 + 1 = 1)* | Check wiring for short-circuit<br>Note<br>Curves cannot be set.<br>LMV26...: Optional press reset button >3 seconds. |
| **65** | **#** | **Internal error** | Make a reset; if error occurs repeatedly, replace the unit |
| **66** | **#** | **Internal error** | Make a reset; if error occurs repeatedly, replace the unit |
| **67** | **#** | **Internal error** | Make a reset; if error occurs repeatedly, replace the unit |
| **70** | **#** | **Internal error fuel-air ratio control: Position calculation modulating** | |
| | *23* | *Output invalid* | No valid output |
| | *26* | *Curvepoints undefined* | Adjust the curvepoints for all actuators |
| **71** | **#** | **Special position undefined** | |
| | *0* | *Home position* | Parameterize the home position for all actuators used |
| | *1* | *Prepurge position* | Parameterize the prepurge position for all actuators used |
| | *2* | *Postpurge position* | Parameterize the postpurge position for all actuators used |
| | *3* | *Ignition position* | Parameterize the ignition position for all actuators used |
| **72** | **#** | **Internal error fuel-air ratio control** | Make a reset; if error occurs repeatedly, replace the unit |
| **73** | **#** | **Internal error fuel-air ratio control: Position calculation multistep** | |
| | *23* | *Output invalid* | No valid output |
| | *26* | *Curvepoints undefined* | Adjust the curvepoints for all actuators |

| Error code | Diagnostic code | Meaning for the LMV2x/3x... system | Remedy |
|---|---|---|---|
| **75** | **#** | **Internal error fuel-air ratio control: Data clocking check** | |
| | *1* | *Current output different* | |
| | *2* | *Target output different* | |
| | *4* | *Target positions different* | |
| | *16* | *Different positions reached* | Can be caused by different standardized speeds (e.g. after restore of data set) when the VSD is activated → standardize again and check adjustment of the fuel-air ratio control system |
| **76** | **#** | **Internal error fuel-air ratio control** | Make a reset; if error occurs repeatedly, replace the unit |
| **80** | **#** | **Control range limitation of VSD** | Basic unit could not correct the difference in speed and reached a control range limit.<br>1. Basic unit is not standardized for this motor → repeat standardization.<br>**Caution!**<br>**Settings of fuel-air ratio control must be checked.**<br>2. Ramp time settings of the VSD are not shorter than those of the basic unit (parameters 522, 523).<br>3. Characteristic of the VSD is not linear. Configuration of the voltage input at the VSD must accord with that of the basic unit (parameter 645).<br>4. VSD does not follow quickly enough the changes of the basic unit. Check settings of the VSD (input filter, slippage compensation, hiding different speeds) |
| | *1* | *Control range limitation at the bottom* | VSD speed was too high |
| | *2* | *Control range limitation at the top* | VSD speed was too low |
| **81** | *1* | *Interrupt limitation speed input* | Too much electromagnetic interference on the sensor line<br>→ improve EMC |

| Error code | Diagnostic code | Meaning for the LMV2x/3x... system | Remedy |
|---|---|---|---|
| **82** | **#** | **Error during VSD's speed standardization** | |
| | *1* | *Timeout of standardization (VSD ramp down time too long)* | Timeout at the end of standardization during ramp down of the VSD<br>→ ramp time settings of the VSD are not shorter than those of the basic unit (parameter: 523) |
| | *2* | *Storage of standardized speed not successful* | Error during storage of the standardized speed<br>→ lock the basic unit, then reset it and repeat the standardization |
| | *3* | *Line interruption speed sensor* | Basic unit receives no pulses from the speed sensor:<br>1. Motor does not turn.<br>2. Speed sensor is not connected.<br>3. Speed sensor is not activated by the sensor disk (check distance) |
| | *4* | *Speed variation / VSD ramp up time too long / speed below minimum limit for standardization* | Motor has not reached a stable speed after ramp up.<br>1. Ramp time settings of the VSD are not shorter than those of the basic unit (parameters 522, 523).<br>2. Characteristic of the VSD is not linear. Configuration of the voltage input at the VSD must accord with that of the basic unit (parameter 645).<br>3. VSD does not follow quickly enough the changes of the basic unit. Check settings of the VSD (input filter, slippage compensation, hiding different speeds)<br>4. Speed of VSD lies below the minimum for standardization (650 1/min) |
| | *5* | *Wrong direction of rotation* | Motor's direction of rotation is wrong.<br>1. Motor turns indeed in the wrong direction<br>→ change parameterization of the direction of rotation or interchange 2 live conductors.<br>2. Sensor disk is fitted the wrong way<br>→ turn the sensor disk. |
| | *6* | *Unplausible sensor signals* | The required pulse pattern (60°, 120°, 180°) has not been correctly identified.<br>1. Speed sensor does not detect all tappets of the sensor disk<br>→ check distance<br>2. As the motor turns, other metal parts are detected also, in addition to the tappets → improve mounting.<br>3. Electromagnetic interference on the sensor lines<br>→ check cable routing, improve EMC |
| | *7* | *Invalid standardized speed* | The standardized speed measured does not lie in the permissible range<br>→ motor turns too slowly or too fast |
| | *15* | *Speed deviation µC1 + µC2* | The speeds of microcomputer 1 and 2 deviated too much. This can be caused by wrong standardized speeds (e.g. after restoring a data set to a new unit)<br>→ repeat standardization and check the fuel-air ratio |

| Error code | Diagnostic code | Meaning for the LMV2x/3x... system | Remedy |
|---|---|---|---|
| | *20* | *Wrong phase of phase manager* | Standardization was made in a wrong phase. Permitted are only phases ≤12 → controller OFF, start standardization again |
| | *21* | *Safety loop / burner flange open* | Safety loop or burner flange is open → repeat standardization with safety loop closed |
| | *22* | *Air actuator not referenced* | Air actuator has not been referenced or has lost its referencing.<br>1. Check if the reference position can be approached.<br>2. Check if actuators have been mixed up.<br>3. If error only occurs after the start of standardization, the actuator might be overloaded and cannot reach its destination. |
| | *23* | *VSD deactivated* | Standardization was started with VSD deactivated<br>→ activate the VSD and repeat standardization |
| | *24* | *No valid operating mode* | Standardization was started without valid operating mode<br>→ activate valid operating mode and repeat standardization |
| | *25* | *Pneumatic air-fuel ratio control* | Standardization was started with pneumatic air-fuel ratio control<br>→ standardization with pneumatic air-fuel ratio control not possible |
| | *128* | *Running command with no preceding standardization* | VSD is controlled but not standardized<br>→ make standardization |
| | *255* | *No standardized speed available* | Motor turns but is not standardized<br>→ make standardization |

| Error code | Diagnostic code | Meaning for the LMV2x/3x... system | Remedy |
|---|---|---|---|
| **83** | **#** | **Speed error VSD** | Required speed has not been reached |
| | *Bit 0*<br>*Valency 1* | *Lower control range limitation of control* | Speed has not been reached because control range limitation has become active<br>→ for measures, refer to error code 80 |
| | *Bit 1*<br>*Valency 2...3* | *Upper control range limitation of control* | Speed has not been reached because control range limitation has become active<br>→ for measures, refer to error code 80 |
| | *Bit 2*<br>*Valency 4...7* | *Interruption via disturbance pulses* | Speed has not been reached due to too much electromagnetic interference on the sensor line<br>→ for measures, refer to error code 81 |
| | *Bit 3*<br>*Valency ≥ 8* | *Curve too steep in terms of ramp speed* | Speed has not been reached because detected curve slope was too steep.<br>1. With a LMV26... ramp of 20 s, the curve's slope may be a maximum of 10% speed change between 2 curvepoints in modulating mode.<br>With a LMV26... ramp of 10 s, the curve's slope may be a maximum of 20% speed change between 2 curvepoints in modulating mode.<br>With a LMV26... ramp of 5 s, the curve's slope may be a maximum of 40% speed change between<br>2 curvepoints in modulating mode.<br>→ Between the ignition point (P0) and the low-fire point (P1), the speed change in modulating mode may be a maximum of 40%, independent of the LMV26... ramp.<br>2. The setting of the VSD ramp must be about 20% faster than the ramps in the basic unit (parameters 522, 523). |
| | *Bit 4*<br>*Valency ≥ 16* | *Interruption of speed signal* | No speed detected in spite of control.<br>1. Check if the motor turns.<br>2. Check if the speed sensor delivers a signal (LED / check distance from the sensor disk).<br>3. Check wiring of the VSD. |
| | *Bit 5*<br>*Valency ≥ 32* | *Quick shutdown due to excessive speed deviation* | Speed deviation was for about 1 s >10% outside the anticipated range.<br>1. Check ramp times of the LMV26... and VSD.<br>2. Check wiring of the VSD. |

| Error code | Diagnostic code | Meaning for the LMV2x/3x... system | Remedy |
|---|---|---|---|
| **84** | **#** | **Curve slope actuators** | |
| | *Bit 0*<br>*Valency 1* | *VSD: Curve too steep in terms of ramp speed* | 1. The curve's slope may be a maximum of 10% speed change between 2 curvepoints in modulating operation, with a LMV26... ramp of 20 seconds<br>The curve's slope may be a maximum of 20% speed change between 2 curvepoints in modulating operation, with a LMV26... ramp of 10 seconds<br>The curve's slope may be a maximum of 40% speed change between 2 curvepoints in modulating operation, with a LMV26... ramp of 5 seconds<br>→ Between the ignition point (P0) and the low-fire point (P1), the speed change in modulating mode may be a maximum of 40%, independent of the LMV26... ramp.<br>2. Setting of the VSD ramp must be about 20% shorter than the ramps in the basic unit (parameters 522 and 523) |
| | *Bit 1*<br>*Valency 2..3* | *Fuel actuator: Curve too steep in terms of ramp rate* | The slope of the curve may be a maximum position change of 31° between 2 curvepoints in modulating mode |
| | *Bit 2*<br>*Valency 4..7* | *Air actuator: Curve too steep in terms of ramp rate* | The slope of the curve may be a maximum position change of 31° between 2 curvepoints in modulating mode |
| **85** | **#** | *Referencing error ones actuators* | |
| | *0* | *Referencing error of fuel actuator* | Referencing of fuel actuator not successful.<br>Reference point could not be reached.<br>1. Check to see if actuators have been mixed up.<br>2. Check to see if actuator is locked or overloaded. |
| | *1* | *Referencing error of air actuator* | Referencing of fuel actuator not successful<br>Reference point could not be reached.<br>1. Check to see if actuators have been mixed up.<br>2. Check to see if actuator is locked or overloaded. |
| | *Bit 7*<br>*Valency ≥ 128* | *Referencing error due to parameter change* | Parameterization of an actuator (e.g. the reference position) has been changed.<br>To trigger new referencing, this error is set |
| **86** | **#** | **Error fuel actuator** | |
| | *0* | *Position error* | Target position could not be reached within the required tolerance band<br>→ check to see if actuator is locked or overloaded |
| | *Bit 0*<br>*Valency 1* | *Line interruption* | *Line interruption* detected at actuator's terminals<br>→ check wiring (voltage X54 across pin 5 or 6 and pin 2 >0.5 V) |
| | *Bit 3*<br>*Valency ≥8* | *Curve too steep in terms of ramp rate* | The slope of the curve may be a maximum position change of 31° between 2 curvepoints in modulating mode |
| | *Bit 4*<br>*Valency ≥ 16* | *Step deviation in comparison with last referencing* | Actuator was overloaded or mechanically twisted.<br>1. Check to see if the actuator is blocked somewhere along its working range.<br>2. Check to see if the torque is sufficient for the application. |

| Error code | Diagnostic code | Meaning for the LMV2x/3x... system | Remedy |
|---|---|---|---|
| **87** | **#** | **Error air actuator** | |
| | *0* | *Position error* | Target position could not be reached within the required tolerance band<br>→ check to see if actuator is locked or overloaded |
| | *Bit 0*<br>*Valency 1* | *Line interruption* | Line interruption detected at actuator's terminals<br>→ check wiring (voltage X53 across pin 5 or 6 and pin 2 >0.5 V) |
| | *Bit 3*<br>*Valency ≥ 8* | *Curve too steep in terms of ramp rate* | The slope of the curve may be a maximum position change of 31° between 2 curvepoints in modulating mode |
| | *Bit 4*<br>*Valency ≥ 16* | *Sectional deviation in comparison with last referencing* | Actuator was overloaded or mechanically twisted.<br>1. Check to see if the actuator is blocked somewhere along its working range.<br>2. Check to see if the torque is sufficient for the application. |
| **90** | **#** | **Internal error basic unit** | |
| **91** | **#** | **Internal error basic unit** | |
| **93** | **#** | **Error flame signal acquisition** | |
| | *3* | *Short-circuit of sensor* | Short-circuit at QRB...<br>1. Check wiring.<br>2. Flame detector possibly fault. |
| **95** | **#** | **Error relay supervision** | |
| | *3 Ignition transformer*<br>*4 Fuel valve 1*<br>*5 Fuel valve 2*<br>*6 Fuel valve 3* | *External power supply NO contact* | Check wiring |
| **96** | **#** | **Error relay supervision** | |
| | *3 Ignition transformer*<br>*4 Fuel valve 1*<br>*5 Fuel valve 2*<br>*6 Fuel valve 3* | *Relay contacts have welded* | Test the contacts:<br>1. Unit connected to power: Fan output must be dead.<br>2. Disconnect power: Disconnect fan. No resistive connection between fan output and neutral conductor allowed.<br>If one of the 2 tests fails, release the unit since contact have definitively welded and safety can no longer be ensured. |
| **97** | **#** | **Error relay supervision** | |
| | *0* | *Safety relay contacts have welded or external power supply fed to safety relay* | Test the contacts:<br>1. Unit connected to power: Fan output must be dead.<br>2. Disconnect power: Disconnect fan. No resistive connection between fan output and neutral conductor allowed.<br>If one of the 2 tests fails, release the unit since contacts have definitively welded and safety can no longer be ensured. |

| Error code | Diagnostic code | Meaning for the LMV2x/3x... system | Remedy |
|---|---|---|---|
| **98** | **#** | **Error relay supervision** | |
| | *2 Safety valve*<br>*3 Ignition transformer*<br>*4 Fuel valve 1*<br>*5 Fuel valve 2*<br>*6 Fuel valve 3* | *Relay does not pull in* | Make a reset; if error occurs repeatedly, replace the unit |
| **99** | **#** | **Internal error relay control** | Make a reset; if error occurs repeatedly, replace the unit |
| | *3* | *Internal error relay control* | Make a reset. If error occurs repeatedly, replace the unit<br>Software version V03.10: If error C:99 D:3 occurs during standardization of the VSD, deactivate temporarily function *Alarm in case of start prevention* (parameter number 210 = 0, when using a release contact) or *interrupt* the controller-ON signal |
| **100** | **#** | **Internal error relay control** | Make a reset; if error occurs repeatedly, replace the unit |
| **105** | **#** | **Internal error contact sampling** | |
| | *0 Pressure switch-min*<br>*1 Pressure switch-max / POC*<br>*2 Fuel selection 0 / Reset*<br>*3 Air pressure*<br>*4 Load controller open*<br>*5 Load controller on / off*<br>*6 Load controller close*<br>*7 Safety loop / Burner flange*<br>*8 Safety valve*<br>*9 Ignition transformer*<br>*10 Fuel valve 1*<br>*11 Fuel valve 2*<br>*12 Fuel valve 3*<br>*13 Fuel selection 1 / Reset* | *Stuck-At failure* | Can be caused by capacitive loads or supply of DC voltage to the mains voltage inputs. The diagnostic code indicates the input where the problem occurred |
| **106** | **#** | **Internal error contact request** | Make a reset; if error occurs repeatedly, replace the unit |
| **107** | **#** | **Internal error contact request** | Make a reset; if error occurs repeatedly, replace the unit |
| **108** | **#** | **Internal error contact request** | Make a reset; if error occurs repeatedly, replace the unit |
| **110** | **#** | **Internal error voltage monitor test** | Make a reset; if error occurs repeatedly, replace the unit |
| **111** | **#** | **Power failure** | Mains voltage to low<br>Exchange ratio diagnostics code → voltage value (230 V: 1.683) |
| **112** | *0* | *Mains voltage recovery* | Error code for triggering a reset on power restoration (no error) |
| **113** | **#** | **Internal error mains voltage supervision** | Make a reset; if error occurs repeatedly, replace the unit |
| **115** | **#** | **Internal error system counter** | |
| **116** | *0* | *Designed life time exceeded (250´000 startups)* | Warning threshold has been reached. The unit should be replaced |

| Error code | Diagnostic code | Meaning for the LMV2x/3x... system | Remedy |
|---|---|---|---|
| **117** | *0* | *Life time exceeded*<br>*Operation no longer allowed* | Switch-off threshold has been reached |
| **120** | *0* | *Interrupt limitation fuel meter input* | Too many disturbance pulses at the fuel meters input<br>→ Improve EMC |
| **121** | **#** | **Internal error EEPROM access** | Make a reset, repeat last parameterization / check. Restore the parameter set, if error occurs repeatedly, replace the unit |
| **122** | **#** | **Internal error EEPROM access** | Make a reset, repeat last parameterization / check. Restore the parameter set, if error occurs repeatedly, replace the unit |
| **123** | **#** | **Internal error EEPROM access** | Make a reset, repeat last parameterization / check. Restore the parameter set, if error occurs repeatedly, replace the unit |
| **124** | **#** | **Internal error EEPROM access** | Make a reset, repeat last parameterization / check. Restore the parameter set, if error occurs repeatedly, replace the unit |
| **125** | **#** | **Internal error EEPROM read access** | Make a reset, repeat last parameterization / check. If error occurs repeatedly, replace the unit |
| **126** | **#** | **Internal error EEPROM write access** | Make a reset, repeat last parameterization / check. If error occurs repeatedly, replace the unit |
| **127** | **#** | **Internal error EEPROM access** | Make a reset, repeat last parameterization / check. Restore the parameter set, if error occurs repeatedly, replace the unit |
| **128** | *0* | *Internal error EEPROM access - synchronization during initialization* | Make a reset; if error occurs repeatedly, replace the unit |
| **129** | **#** | **Internal error EEPROM access – command synchronization** | Make a reset, repeat last parameterization / check. If error occurs repeatedly, replace the unit |
| **130** | **#** | **Internal error EEPROM access - timeout** | Make a reset, repeat last parameterization / check. If error occurs repeatedly, replace the unit |
| **131** | **#** | **Internal error EEPROM access - page on abort** | Make a reset, repeat last parameterization / check. If error occurs repeatedly, replace the unit |
| **132** | **#** | **Internal error EEPROM register initialization** | Make a reset; if error occurs repeatedly, replace the unit |
| **133** | **#** | **Internal error EEPROM access – Request synchronization** | Make a reset, repeat last parameterization / check. If error occurs repeatedly, replace the unit |
| **134** | **#** | **Internal error EEPROM access – Request synchronization** | Make a reset, repeat last parameterization / check. If error occurs repeatedly, replace the unit |
| **135** | **#** | **Internal error EEPROM access – Request synchronization** | Make a reset, repeat last parameterization / check. If error occurs repeatedly, replace the unit |
| **136** | *1* | *Restore started* | Restore of a backup has been started (no error) |

| Error code | Diagnostic code | Meaning for the LMV2x/3x... system | Remedy |
|---|---|---|---|
| **137** | **#** | **Internal error – backup / restore** | |
| | *157 (-99)* | *Restore – ok, but backup < data set of current system* | Restore successful, but backup data record is smaller than in the current system |
| | *239 (-17)* | *Backup – storage of backup in AZL2... faulty* | Reset and repeat backup |
| | *240 (-16)* | *Restore – no backup in AZL2...* | No backup stored in AZL2... |
| | *241 (-15)* | *Restore – abortion due to unsuitable product no. (ASN)* | Backup has an unsuitable product no. (ASN) and must not be restored |
| | *242 (-14)* | *Backup – backup made is inconsistent* | Backup is faulty and cannot be transferred back |
| | *243 (-13)* | *Backup – data comparison between µCs faulty* | Reset and repeat backup |
| | *244 (-12)* | *Backup data are incompatible* | Backup data are incompatible with the current software version, restore not possible |
| | *245 (-11)* | *Access error to parameter Restore_Complete* | Reset and repeat backup |
| | *246 (-10)* | *Restore – timeout when storing in EEPROM* | Reset and repeat backup |
| | *247 (-9)* | *Data received are inconsistent* | Backup data record invalid, restore not possible |
| | *248 (-8)* | *Restore cannot at present be made* | Reset and repeat backup |
| | *249 (-7)* | *Restore – abortion due to unsuitable burner identification* | Backup has an unsuitable burner identification and must not be transferred to the unit |
| | *250 (-6)* | *Backup – CRC of one page is not correct* | Backup data record invalid, restore not possible |
| | *251 (-5)* | *Backup – burner identification is not defined* | Define burner identification and repeat backup |
| | *252 (-4)* | *After restore, pages still on ABORT* | Reset and repeat backup |
| | *253 (-3)* | *Restore cannot at present be made* | Reset and repeat backup |
| | *254 (-2)* | *Abortion due to transmission error* | Reset and repeat backup |
| | *255 (-1)* | *Abortion due to timeout during backup / restore* | Make a reset, check the connections and repeat backup / restore<br>In case of repeated backup timeout, the AZL2... does not yet support backup functionality |
| **146** | **#** | **Timeout building automation interface** | Refer to Modbus User Documentation (A7541) |
| | *1* | *Modbus timeout* | |
| | *2* | *reserved* | |

| Error code | Diagnostic code | Meaning for the LMV2x/3x... system | Remedy |
|---|---|---|---|
| **150** | **#** | **TÜV test** | |
| | *1 (-1)* | *Invalid phase* | TÜV test may only be started in phase 60 (operation) |
| | *2 (-2)* | *TÜV test default output too low* | TÜV test default output must not be smaller than the lower output limit |
| | *3 (-3)* | *TÜV test default output too high* | TÜV test default output must not be greater than the upper output limit |
| | *4 (-4)* | *Manual interruption* | No error: Manual abortion of TÜV test by user |
| | *5 (-5)* | *TÜV test timeout* | No loss of flame after shutdown of fuel valves<br>1. Check to see if there is extraneous light<br>2. Check wiring to see if there is a short-circuit<br>3. Check to see if valve is leaking |
| **165** | **#** | **Internal error** | |
| **166** | *0* | *Internal error watchdog reset* | |
| **167** | **#** | **Manual locking** | Unit has been manually locked (no error) |
| | *1* | *Manual locking by contact* | |
| | *2* | *Manual locking by AZL2...* | |
| | *3* | *Manual locking by PC tool* | |
| | *8* | *Manual locking by the AZL2...*<br>*Timeout / communication breakdown* | During a curve adjustment via the AZL2..., the timeout for menu operation has elapsed (setting via parameter 127), or communication between the LMV26... and the AZL2... has broken down |
| | *9* | *Manual locking by the PC tool*<br>*Communication breakdown* | During a curve adjustment via the ACS410, communication between the LMV26... and the ACS410 was interrupted for more than 30 seconds |
| | *33* | *Manual locking by the PC tool*<br>*Test of lockout* | PC tool made a reset attempt with an error-free system |
| **168** | **#** | **Internal error management** | Make a reset; if error occurs repeatedly, replace the unit |
| **169** | **#** | **Internal error management** | Make a reset; if error occurs repeatedly, replace the unit |
| **170** | **#** | **Internal error management** | Make a reset; if error occurs repeatedly, replace the unit |
| **171** | **#** | **Internal error management** | Make a reset; if error occurs repeatedly, replace the unit |
| **200 OFF** | **#** | **System error-free** | No error |

| Error code | Diagnostic code | Meaning for the LMV2x/3x... system | Remedy |
|---|---|---|---|
| **201 OFF UPr0** or **OFF UPr1** | **#** | **Prevention of startup** | Start prevention due to unparameterized unit<br>Go to error history, entry 702, for initial cause of the error with shutdown in connection with the first curve settings |
| | *Bit 0*<br>*Valency 1* | *No operating mode selected* | |
| | *Bit 1*<br>*Valency 2..3* | *No fuel train defined* | |
| | *Bit 2*<br>*Valency 4..7* | *No curves defined* | |
| | *Bit 3*<br>*Valency 8..15* | *Standardized speed undefined* | |
| | *Bit 4*<br>*Valency 16..31* | *Backup / restore was not possible* | |
| **202** | **#** | **Internal error operating mode selection** | Redefine the operating mode (parameter 201) |
| **203** | **#** | **Internal error** | Redefine the operating mode (parameter 201).<br>Make a reset; if error occurs repeatedly, replace the unit |
| **204** | **Phase number** | **Program stop** | Program stop is active (no error) |
| **205** | **#** | **Internal error** | Make a reset; if error occurs repeatedly, replace the unit |
| **206** | *0* | *Inadmissible combination of units*<br>*(basic unit – AZL2...)* | |
| **207** | **#** | **Version compatibility basic unit – AZL2...** | |
| | *0* | *Basic unit version too old* | |
| | *1* | *AZL2... version too old* | |
| **208** | **#** | **Internal error** | Make a reset; if error occurs repeatedly, replace the unit |
| **209** | **#** | **Internal error** | Make a reset; if error occurs repeatedly, replace the unit |
| **210** | *0* | *Selected operating mode is not released for the basic unit* | Select a released operating mode for the basic unit |
| **240** | **#** | **Internal error** | Make a reset; if error occurs repeatedly, replace the unit |
| **245** | **#** | **Internal error** | Make a reset; if error occurs repeatedly, replace the unit |
| **250** | **#** | **Internal error** | Make a reset; if error occurs repeatedly, replace the unit |

## *WIRING DIAGRAM*

## *Wiring connection for LMV20*

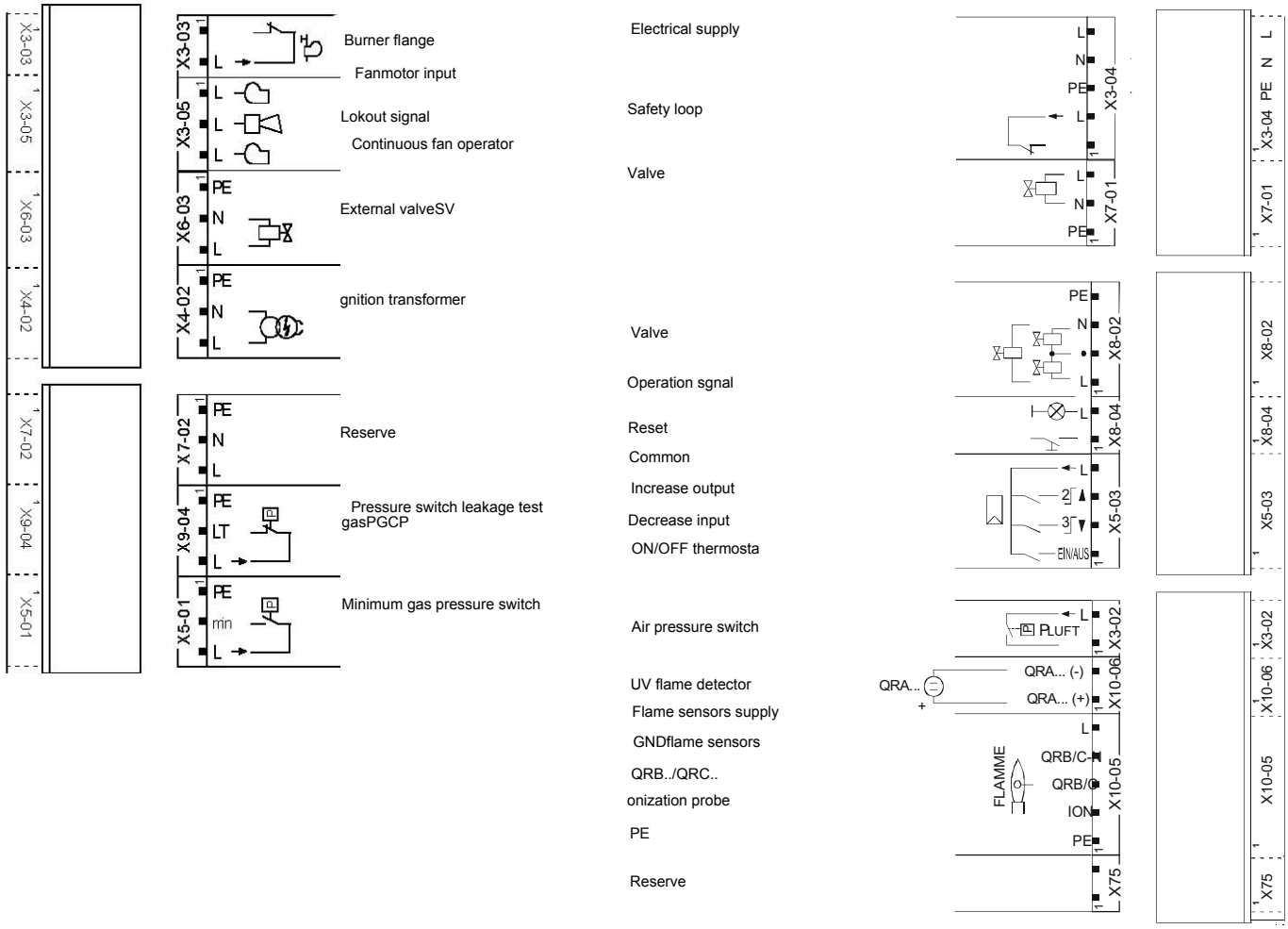


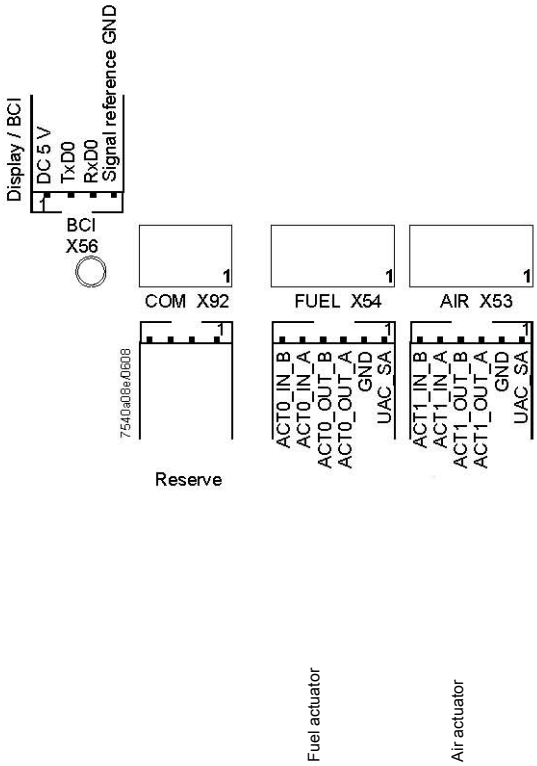

## *Wiring variants for LMV27*

**ConnectorX75**

2 - Fuel meter input

1 - Supply fuel meter

**ConnectorX5-02**

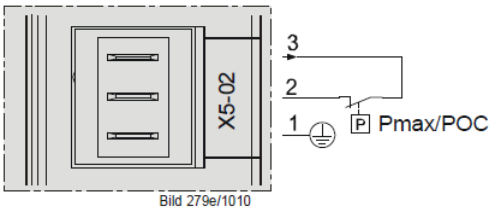


ConnectionsPmax

## *Wiring variants for LMV26*

### ConnectorX08-04 / X09-04

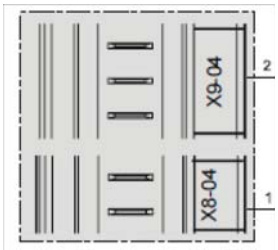


2 - Fuel 0

1 - Fuel1

### ConnectorX75

2 - Fuel meter input

1 - Supply fuel meter

### ConnectorX64

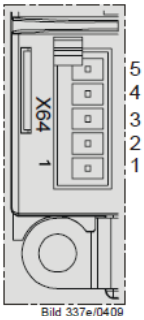


5 -Power supply speed sensor

4 -Speed sensor input

3 - PWM (Pulse Width Modulation) speed output

2 - GND (signal reference)

1 -Controller input (4÷20mA)

### ConnectorX74

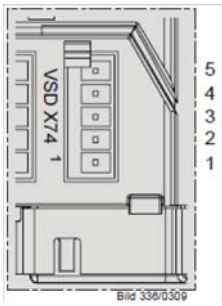


5 -Supply

4 -Feedback signal

3 - PWM (Pulse Width Modulation) speed output

2 - GND (signal reference)

1 -External supply 24V DC

## *Wiring variants for LMV37*

### ConnectorX75

2 - Fuel meter input

1 - Supply fuel meter

### ConnectorX5-02

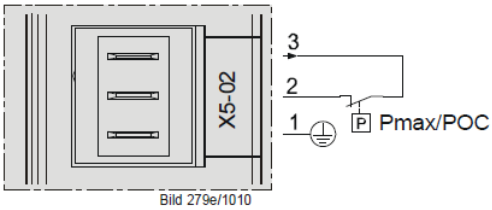


Connections Pmax

### ConnectorX64

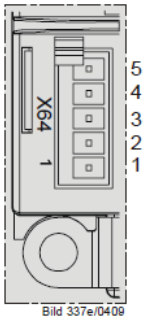


5 -Power supply speed sensor

4 -Speed sensor input

3 - PWM (Pulse Width Modulation) speed output

2 - GND (signal reference)

1 -Controller input (4÷20mA)

### ConnectorX74

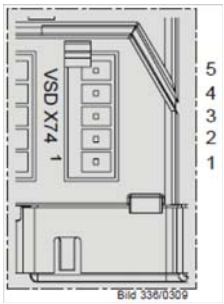


5 -Supply

4 -Feedback signal

3 - PWM (Pulse Width Modulation) speed output

2 - GND (signal reference)

1 -External supply 24V DC

C.I.B. UNIGAS S.p.A.
Via L.Galvani, 9 - 35011 Campodarsego (PD) - ITALY
Tel. +39 049 9200944 - Fax +39 049 9200945/9201269
web site: www.cibunigas.it - e-mail: cibunigas@cibunigas.it

*Note: Specifications and and data subject to change. Errors and omissions excepted.*