C92A
C120A

Progressive - Fully Modulating
Double stage

Gas - Light oil burners

MANUAL OF INSTALLATION - USE - MAINTENANCE

BURNERS - BRUCIATORI - BRULERS - BRENNER - QUEMADORES - ГОРЕЛКИ

M039450CA 0.6 10/2023

DANGERS, WARNINGS AND NOTES OF CAUTION

This manual is supplied as an integral and essential part of the product and must be delivered to the user.

Information included in this section are dedicated both to the user and to personnel following product installation and maintenance.

The user will find further information about operating and use restrictions, in the second section of this manual. we highly recommend to read it.

Carefully keep this manual for future reference.

The following:

- Entails the customer's acknowledgement and acceptance of the company's general terms and conditions of sale, in force at the date of order confirmation and available in the appendix to the current price lists.
- Is intended exclusively for specialised, experienced and trained users able to operate in conditions that are safe for people, the device and the environment, and in full compliance with the requirements set out on the following pages and with current health and safety regulations.

Information regarding assembly/installation, maintenance, replacement and repair is always and exclusively intended for (and therefore only to be carried out by) specialised personnel and/or directly by the Authorised Technical Service

IMPORTANT :

The supply has been made at the best conditions on the basis of the customer's order and technical indications concerning the state of the places and the installation systems, as well as the need to prepare certain certifications and / or additional adaptations with respect to the standard observed and transmitted for each product. In this respect, the manufacturer declines any responsibility for complaints, malfunctions, criticalities, damages and/or anything else consequent to incomplete, inaccurate and/or missing information, as well as failure to comply with the technical requirements and installation regulations, initial start-up, operational management and maintenance.

For proper operation of the device, it is necessary to ensure the readability and conservation of the manual, also for future reference. In case of deterioration or more simply for reasons of technical and operational insight, contact the manufacturer directly. Text, descriptions, images, examples and anything else contained in this document are the exclusive property of the manufacturer. Any reproduction is prohibited.

RISK ANALYSIS

Instruction manual supplied with the burner:

This is an integral and essential part of the product and must not be separated from it. It must therefore be kept carefully for any necessary consultation and must accompany the burner even if it is transferred to another owner or user, or to another system. In the event of damage or loss, another copy must be requested from the local customer service centre;

Delivery of the system and instruction manual

.

The supplier of the system is obliged to accurately inform the user about:– Use of the system;

– any further testing that may be necessary before activating the system;

– maintenance and the requirement to have the system checked at least once a year by a contractor or other specialised technician.

To ensure periodic monitoring, the manufacturer recommends drawing up a Maintenance Agreement.

WARRANTY AND LIABILITY

In particular, warranty and liability claims will no longer be valid in the event of damage to persons and/or property if such damage is due to any of the following causes:

- Incorrect installation, start-up, use and maintenance of the burner;
- Improper, incorrect or unreasonable use of the burner;
- Operation by unqualified personnel;
- Carrying out of unauthorised changes to the device;
- Use of the burner with safety devices that are faulty, incorrectly applied and/or not working;
- Installation of untested supplementary components on the burner;
- Powering of the burner with unsuitable fuels;
- Faults in the fuel supply system;
- Use of the burner even after an error and/or fault has occurred;
- Repairs and/or overhauls incorrectly carried out;
- Modification of the combustion chamber with inserts that prevent the regular development of the structurally established flame;
- Insufficient and inappropriate supervision and care of the burner components most subject to wear and tear;
- Use of non-original components, whether spare parts, kits, accessories and optionals;
- Force majeure.

Furthermore, the manufacturer declines all responsibility for non-compliance with this manual.

WARNING! Failure to comply with this manual, operational negligence, incorrect installation and unauthorised modifications will result in the manufacturer's warranty for the burner being voided.

Personnel training

The user is the person, organisation or company that has acquired the appliance and intends to use it for the specific purpose. The user is responsible for the appliance and for training the personnel that operate it.

The user:

- Undertakes to entrust the machine to suitably trained and qualified personnel;
- Must take all measures necessary to prevent unauthorised people gaining access to the appliance;
- Undertakes to adequately inform personnel about application and observance of the safety requirements, and therefore ensure that they are familiar with the operating instructions and safety requirements;
- Must inform the manufacturer if any faults or malfunctions of the accident prevention systems occur, and if there is any suspected danger;
- Personnel must always use the personal protective equipment required by law and follow the instructions provided in this manual;
- Personnel must observe all danger and caution notices on the appliance;
- Personnel must not carry out, on their own initiative, operations or interventions outside their area of expertise;
- Personnel must inform their superiors of any problem and danger that may arise;
- The assembly of parts of other makes, or any modifications made, may alter the characteristics of the appliance and may therefore compromise operational safety. The manufacturer therefore declines all responsibility for damages arising from the use of non-original parts.

GENERAL INTRODUCTION

- The equipment must be installed in compliance with the regulations in force, following the manufacturer's instructions, by qualified personnel.
- Qualified personnel means those having technical knowledge in the field of components for civil or industrial heating systems, sanitary hot water generation and particularly service centres authorised by the manufacturer.
- Improper installation may cause injury to people and animals, or damage to property, for which the manufacturer cannot be held liable.
- Remove all packaging material and inspect the equipment for integrity.

In case of any doubt, do not use the unit - contact the supplier.

The packaging materials (wooden crate, nails, fastening devices, plastic bags, foamed polystyrene, etc), should not be left within the reach of children, as they may prove harmful.

- Before any cleaning or servicing operation, disconnect the unit from the mains by turning the master switch OFF, and/or through the cutout devices that are provided.
- Make sure that inlet or exhaust grilles are unobstructed.
- In case of breakdown and/or defective unit operation, disconnect the unit. Make no attempt to repair the unit or take any direct action.

Contact qualified personnel only.

Units shall be repaired exclusively by a servicing centre, duly authorised by the manufacturer, with original spare parts and accessories.

Failure to comply with the above instructions is likely to impair the unit's safety.

To ensure equipment efficiency and proper operation, it is essential that maintenance operations are performed by qualified personnel at regular intervals, following the manufacturer's instructions.

- When a decision is made to discontinue the use of the equipment,

those parts likely to constitute sources of danger shall be made harmless.

- In case the equipment is to be sold or transferred to another user, or in case the original user should move and leave the unit behind, make sure that these instructions accompany the equipment at all times so that they can be consulted by the new owner and/or the installer.
- This unit shall be employed exclusively for the use for which it is meant. Any other use shall be considered as improper and, therefore, dangerous.

The manufacturer shall not be held liable, by agreement or otherwise, for WARNING! Failure to observe the information given in this manual, operating negligence, incorrect installation and carrying out of non authorised modifications will result in the annulment by the manufacturer of the guarantee that it supplies with the burner.

The damages resulting from improper installation, use and failure to comply with the instructions supplied by the manufacturer.The occurrence of any of the following circustances may cause explosions, polluting unburnt gases (example: carbon monoxide CO), burns, serious harm to people, animals and things:

- Failure to comply with one of the WARNINGS in this chapter
- Incorrect handling, installation, adjustment or maintenance of the burner
- Incorrect use of the burner or incorrect use of its parts or optional supply

SPECIAL INSTRUCTIONS FOR BURNERS

a Make the following checks:

- • the burner should be installed in a suitable room, with ventilation openings complying with the requirements of the regulations in force, and sufficient for good combustion;
- • only burners designed according to the regulations in force should be used;
- • this burner should be employed exclusively for the use for which it was designed;
- • before connecting the burner, make sure that the unit rating is the same as delivery mains (electricity, gas oil, or other fuel);
- • observe caution with hot burner components. These are, usually, near to the flame and the fuel pre-heating system, they become hot during the unit operation and will remain hot for some time after the burner has stopped.

When the decision is made to discontinue the use of the burner, the user shall have qualified personnel carry out the following operations:

a • remove the power supply by disconnecting the power cord from the mains;

b • disconnect the fuel supply by means of the hand-operated shutoff valve and remove the control handwheels from their spindles.

Special warnings

- Make sure that the burner has, on installation, been firmly secured to the appliance, so that the flame is generated inside the appliance firebox.
- Before the burner is started and, thereafter, at least once a year, have qualified personnel perform the following operations:
  - a set the burner fuel flow rate depending on the heat input of the appliance;
  - b set the flow rate of the combustion-supporting air to obtain a combustion efficiency level at least equal to the lower level required by the regulations in force;
  - c check the unit operation for proper combustion, to avoid any harmful or polluting unburnt gases in excess of the limits permitted by the regulations in force;
  - d make sure that control and safety devices are operating properly;
  - e make sure that exhaust ducts intended to discharge the products of combustion are operating properly;
  - f on completion of setting and adjustment operations, make sure that all mechanical locking devices of controls have been duly tightened;
  - g make sure that a copy of the burner use and maintenance instructions is available in the boiler room.
- In case of a burner shut-down, reser the control box by means of the RESET pushbutton. If a second shut-down takes place, call the Technical Service, without trying to RESET further.
- The unit shall be operated and serviced by qualified personnel only, in compliance with the regulations in force.

GENERAL INSTRUCTIONS DEPENDING ON FUEL USED

ELECTRICAL CONNECTION

- For safety reasons the unit must be efficiently earthed and installed as required by current safety regulations.
- It is vital that all saftey requirements are met. In case of any doubt, ask for an accurate inspection of electrics by qualified personnel, since the manufacturer cannot be held liable for damages that may be caused by failure to correctly earth the equipment.
- Qualified personnel must inspect the system to make sure that it is adequate to take the maximum power used by the equipment shown on the equipment rating plate. In particular, make sure that the system cable cross section is adequate for the power absorbed by the unit.
- No adaptors, multiple outlet sockets and/or extension cables are permitted to connect the unit to the electric mains.
- An omnipolar switch shall be provided for connection to mains, as required by the current safety regulations.
- The use of any power-operated component implies observance of a few basic rules, for example:
  - do not touch the unit with wet or damp parts of the body and/or with bare feet;
  - do not pull electric cables;
  - do not leave the equipment exposed to weather (rain, sun, etc.) unless expressly required to do so;
  - do not allow children or inexperienced persons to use equipment;
- The unit input cable shall not be replaced by the user. In case of damage to the cable, switch off the unit and contact qualified personnel to replace.

When the unit is out of use for some time the electric switch supplying all the power-driven components in the system (i.e. pumps, burner, etc.) should be switched off.

FIRING WITH GAS, LIGHT OIL OR OTHER FUELS GENERAL

General Warnings

- The burner shall be installed by qualified personnel and in compliance with regulations and provisions in force; wrong installation can cause injuries to people and animals, or damage to property, for which the manufacturer cannot be held liable.
- Before installation, it is recommended that all the fuel supply system pipes be carefully cleaned inside, to remove foreign matter that might impair the burner operation.
- Before the burner is commissioned, qualified personnel should inspect the following:
  - a the fuel supply system, for proper sealing;
  - b the fuel flow rate, to make sure that it has been set based on the firing rate required of the burner;
  - c the burner firing system, to make sure that it is supplied for the designed fuel type;
  - d the fuel supply pressure, to make sure that it is included in the range shown on the rating plate;
  - e the fuel supply system, to make sure that the system dimensions are adequate to the burner firing rate, and that the system is equipped with all the safety and control devices required by the regulations in force.
- When the burner is to remain idle for some time, the fuel supply tap or taps should be closed.

Special instructions for using gas

Have qualified personnel inspect the installation to ensure that:

- a the gas delivery line and train are in compliance with the regulations and provisions in force;
- b all gas connections are tight;
- c the boiler room ventilation openings are such that they ensure the air supply flow required by the current regulations, and in any case are sufficient for proper combustion.

- Do not use gas pipes to earth electrical equipment.
- Never leave the burner connected when not in use. Always shut the gas valve off.
- In case of prolonged absence of the user, the main gas delivery valve to the burner should be shut off.

BURER DATA PLATE

For the following information, please refer to the data plate:

- Burner type and burner model: must be reported in any communication with the supplier
- Burner ID (serial number): must be reported in any communication with the supplier
- Date of production (year and month)
- Information about fuel type and network pressure

	Consump
Type	--
Model	--
Year	--
S.Number	--
Output	--
Oil Flow	--
Fuel	--
Category	--
Gas Pressure	--
Viscosity	--
El.Supply	--
El.Consump.	--
Fan Motor	--
Protection	--
Drwaing n°	--
P.I.N.	--

Precautions if you can smell gas

a do not operate electric switches, the telephone, or any other item likely to generate sparks;

b immediately open doors and windows to create an air flow to purge the room;

c close the gas valves;

d contact qualified personnel.

- Do not obstruct the ventilation openings of the room where gas appliances are installed, to avoid dangerous conditions such as the development of toxic or explosive mixtures.

Using oil pressure gauges

Generally, pressure gauges are equipped with a manual valve. Open the valve only to take the reading and close it immediately afterwards.

SYMBOLS USED

WARNING	Failure to observe the warning may result in irreparable damage to the unit or damage to the environment
DANGER!	Failure to observe the warning may result in serious injuries or death.
WARNING	Failure to observe the warning may result in electric shock with lethal consequences.

BURNER SAFETY

The burners- and the configurations described below - comply with the regulations in force regarding health, safety and the environment. For more in-depth information, refer to the declarations of conformity that are an integral part of this Manual.

.

DANGER! Incorrect motor rotation can seriously damage property and injure people.

.Do not touch any mechanical moving parts with your hands or any other part of your body. Injury hazard

Do not touch any parts containing fuel (i.e. tank and pipes). Scalding hazard

Do not use the burner in situations other than the ones provided for in the data plate.

Do not use fuels other than the ones stated.

Do not use the burner in potentially explosive environments.

Do not remove or by-pass any machine safety devices.

Do not remove any protection devices or open the burner or any other component while the burner is running.

Do not disconnect any part of the burner or its components while the burner is running.

Untrained staff must not modify any linkages.

- After any maintenance, it is important to restore the protection devices before restarting the machine.
- All safety devices must be kept in perfect working order.
- Personnel authorized to maintain the machine must always be provided with suitable protections.

ATTENTION: while running, the parts of the burner near the generator (coupling flange) are subject to overheating. Where necessary, avoid any contact risks by wearing suitable PPE.

Safety and prevention

- Opening or tampering with the burner components is not allowed, apart from the parts requiring maintenance.
- Only those parts envisaged by the manufacturer can be replaced.

DIRECTIVES AND STANDARDS

Gas - Light oil burners

European directives

2016/426/UE (appliances burning gaseous fuels)
2014/35/UE (Low Tension Directive)
2014/30/UE (Electromagnetic compatibility Directive)
2006/42/CE (Machinery Directive)

Harmonized standards

UNI EN 676 (Automatic forced draught burners for gaseous fuels)
UNI EN 267-2011 (Automatic forced draught burners for liquid fuels)
EN 55014-1 (Electromagnetic compatibility- Requirements for house hold appliances, electric tools and similar apparatus)
EN 60204-1:2006 (Safety of machinery – Electrical equipment of machines.)
CEI EN 60335-1 (Specification for safety of household and similar electrical appliances);
CEI EN 60335-2-102 (Household and similar electrical appliances. Safety. Particular requirements for gas, oil and solid-fuel burning appliances having electrical connections).
UNI EN ISO 12100:2010(Safety of machinery - General principles for design - Risk assessment and risk reduction);

Industrial burners

European directives

2006/42/CE (Machinery Directive)
2014/35/UE (Low Tension Directive)
2014/30/UE (Electromagnetic compatibility Directive)
2006/42/CE (Machinery Directive)

Harmonized standards

EN 746-2 (Industrial thermoprocessing equipment - Part 2: Safety requirements for combustion and fuel handling systems)
EN 55014-1 (Electromagnetic compatibility- Requirements for house hold appliances, electric tools and similar apparatus)
EN 60204-1:2006 (Safety of machinery – Electrical equipment of machines.)
CEI EN 60335-1 (Specification for safety of household and similar electrical appliances);
UNI EN ISO 12100:2010 (Safety of machinery - General principles for design - Risk assessment and risk reduction);

PART I: SPECIFICATIONS

BURNERS FEATURES

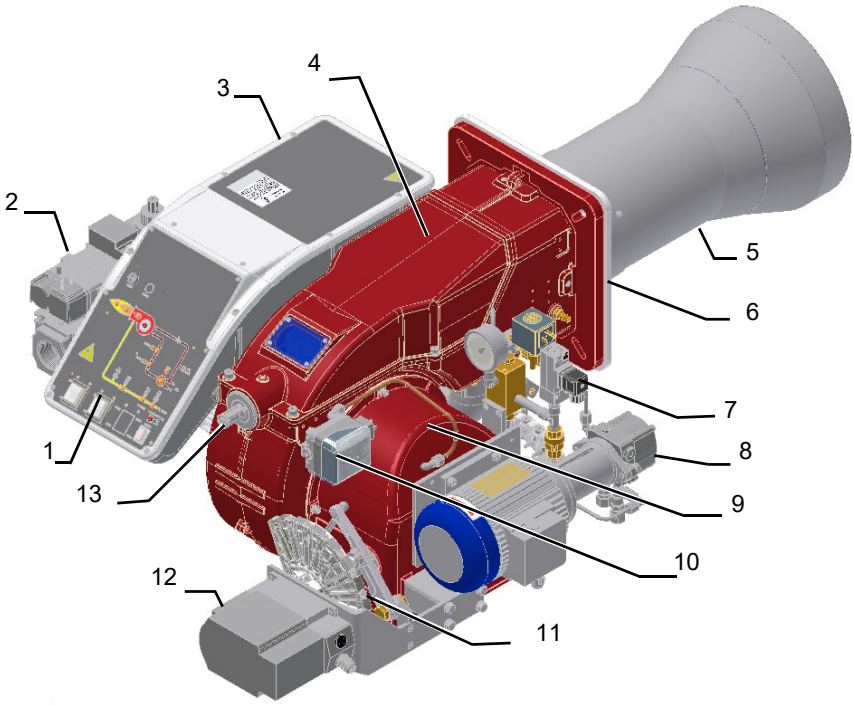

Note: the figure is indicative only

1 Mimic panel with startup switch
2 Gas valves groupElectrical panel
3 Electrical panel
4 Cover
5 Blast tube + Combustion head
6 Flange
7 Oil pressure governor
8 Pump
9 Air intakeSilencer
10 Air pressure switch
11 Adjusting cams
12 Actuator
13 Head adjusting ring nut

Gas operation: the gas coming from the supply line, passes through the valves group provided with filter and governor. This one forces the pressure in the utilisation limits. The actuators move proportionally the air damper and the gas butterfly valve, in order to achieve the optimisation of the gas flue values, as to get an efficient combustion.

Light oil operation: the fuel coming from the supply line, is pushed by the pump to the nozzle and then into the combustion chamber, where the mixture between fuel and air takes place and consequently the flame.

In the burners, the mixture bertween fuel and air, to perform clean and efficient combustion, is activated by atomisation of oil into very small particles. This process is achieved making pressurised oil passing through the nozzle.

The pump main function is to transfer oil from the tank to the nozzle in the desired quantity and pressure. To adjust this pressure, pumps are provided with a pressure regulator (except for some models for which a separate regulating valve is provided). Other pumps are provided with two pressure regulators: one for the high and one for low pressure (in double-stage systems with one nozzle).

The adjustable combustion head can improve the burner performance. The combustion head determines the energetic quality and the geometry of the flame. Fuel and comburent are routed into separated ways as far as the zone of flame generation (combustion chamber). The control panel, placed on the burner front side, shows each operating stage.

Gas categories and countries of application

Countries
AL, AT, BE, BG, CH, CY, DE, DK, EE, ES, FI, FR, GB, GR, HR, HU, IE, IS, IT, LT, LU, LV, MK, MT, NO, NL, PL, PT, RO, SE, SI, SK, TR

Group	
H	L (*)
E	2R (*)
EK (*)	Er (*)
LL (*)	E (R)

(*) Premix type ...N burners are not enabled to work with these gas categories.

The above gas groups can be combined according to the standard EN437:2021 and national situation of countries.

Burner model identificationBurner model identification

Burners are identified by burner type and model. Burner model identification is described as follows.

Type	**C92A**	Model	**MG.**	**MD.**	**SP.**	***.**	**A.**	**0.**	**40.**
	(1)		**(2)**	**(3)**	**(4)**	**(5)**	**(6)**	**(7)**	**(8)**

1	BURNER TYPE	**C92A, C120A**
2	FUEL	MG - Natural gas-Light oil LG - LPG-Light oil
3	OPERATION (Available versions)	PR - Progressive MD - Fully modulating AB - Double stage
4	BLAST TUBE	SR = Standard blast tube + ABS polymer (silenced) air intake SP = Standard blast tube + aluminium air intake LR = Extended blast tube + ABS polymer (silenced) air intake LP = Extended blast tube + aluminium air intake
5	DESTINATION COUNTRY	* - see data plate
6	BURNER VERSION	A - Standard, Y - Special
7	EQUIPMENT	0 = 2 gas valves 1 = 2 gas valves + gas proving system 7 = 2 gas valves + maximum gas pressure switch 8 = 2 gas valves + gas proving system + maximum gas pressure switch
8	GAS CONNECTION	32 = $Rp1_{1/4}$ 40 = $Rp1_{1/2}$ 50 = Rp2, 65 = DN65, 80 = DN80, 100 = DN100

Burner performance

		C92A MG..	**C120A MG..**	**C92A LG..**	**C120A LG..**
Output	min. - max. kW	250 - 920	300 - 1200	250 - 920	300 - 1200
Fuel		M - Natural gas		L - LPG	
Category		(see next paragraph)		$I_{3B/P}$	
Protection		IP40			
Operation		Progressive - Fully modulating - Double stage			
Operating temperature	°C	-10 ÷ +50			
Storage Temperature	°C	-20 ÷ +60			
Working service (4)		Intermitent			

Fuel data

gas rate- Natural gas (1)	min.- max. (Stm^3/h)	26 - 97	32 - 127	-	-
gas rate-		-	-	9,3 - 34	11,2 - 45
Gas pressure (2)	mbar				
Light oil rate	min. - max. kg/h	21 - 78	25 - 101	21 - 78	25 - 101
Light Oil viscosity		2 - 7,4	2 - 7,4	2 - 7,4	2 - 7,4
Light Oil density	kg/m^3	840	840	840	840
Light oil train inlet pressure	max. bar	2	2	2	2
Light Oil viscosity	cSt @ 40 °C	2 - 7,4	2 - 7,4	2 - 7,4	2 - 7,4

Electrical data 50 Hz

Possible voltages, check the actual three-phase and single-phase supply voltage on the burner nameplate.

Power supply triphase	V	230 / 400 3 a.c.			
Auxiliary power supply Mono Phase	V	115 2 a.c. / 220 2 a.c. / 230 1N a.c.			
	Hz	**50**			
Fan motor	kW	1,1	1,5	1,1	1,5
Pump motor	kW	0,55	0,55	0,55	0,55
Total power consumption	kW	2,15	2,55	2,15	2,55

Electrical data 60 Hz

Possible voltages, check the actual three-phase and single-phase supply voltage on the burner nameplate.

Power supply triphase	V	220 / 230 / 265 / 277 / 380 / 440 / 460 / 480 / 525 3 a.c.			
Auxiliary power supply Mono Phase	V	110 / 120 / 230 2 a.c.			
	Hz	**60**			
Fan motor	kW	1,32	1,8	1,32	1,8
Pump motor	kW	0,66	0,66	0,66	0,66
Total power consumption	kW	2,48	2,96	2,48	2,96

Note 1:	All gas flow rates are referred to Stm^3 / h (1.013 mbar absolute pressure, 15 °C temperature) and are valid for G20 gas (net calorific value H_i = 34,02 MJ / Stm^3); for L.P.G. (net calorific value H_i = 93,5 MJ / Stm^3).	
Note 2:	Maximum gas pressure	360 mbar (with Dungs MBDLE).
		500 mbar (with Siemens VGD or Dungs MultiBloc MBE).
	Minimum gas pressure	see gas curves
Note 3:	Burners are suitable only for indoor operation with a maximum relative humidity of 80 %.	
Note 4:	With electrode: for safety reasons the burner must stop automatically every 24 hours.	

Technical Specifications

Fuel

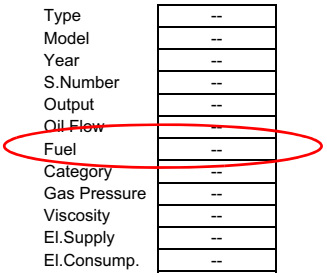

WARNING! The burner must be used only with the fuel specified in the burner data plate .

The burner technical specifications, described in this manual, refer to natural gas (calorific net value Hi = 9.45 kWh/Stm^3, density ρ = 0.717 Kg/Stm^3). For different fuel such as LPG, town gas and biogas, multiply the values of flow and pressure by th corrective factors shown in the table below.

Fuel	**Hi** (KWh/Stm^3)	**ρ** (kg/Stm^3)	f_Q	f_p
LPG	26,79	2,151	0,353	0,4
Town gas	4,88	0,6023	1,936	3,3
Biogas	6,395	1,1472	1,478	3,5

For example, to obtain the flow and pressure values for the biogas:

$$Q_{biogas} = Q_{naturalGas} \cdot 1,478$$

$$p_{biogas} = p_{naturalGas} \cdot 3,5$$

ATTENTION! The combustion head type and the settings depend on the fuel. The burner must be used only for its intended purpose specified in the burner data plate .

ATTENTION! The corrective factors in the above table depend on the gas composition, so on the calorifc value and the density of the gas. The above value can be taken only as reference.

Overall dimensions (mm) C92A PR/MD.. Burner with aluminium air inlet

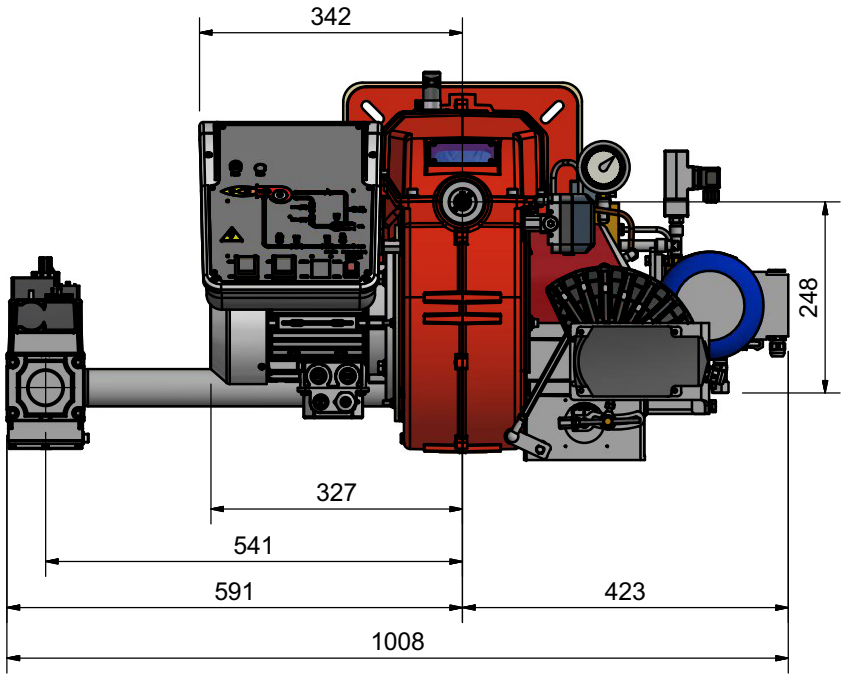

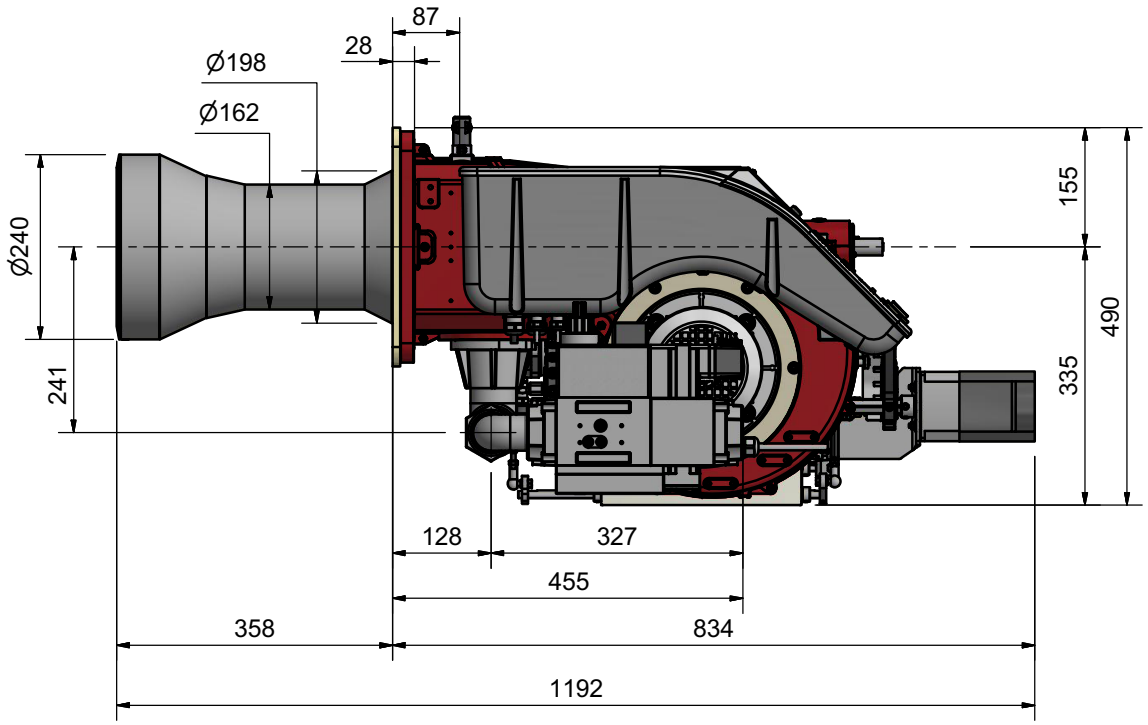

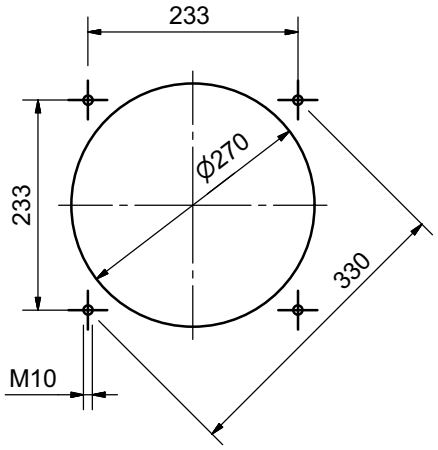

Boiler recommended drilling template

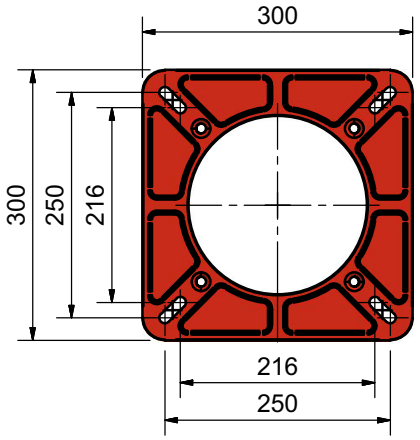

Burner flange

Overall dimensions (mm) C120A PR/MD..Burner with aluminium air inlet

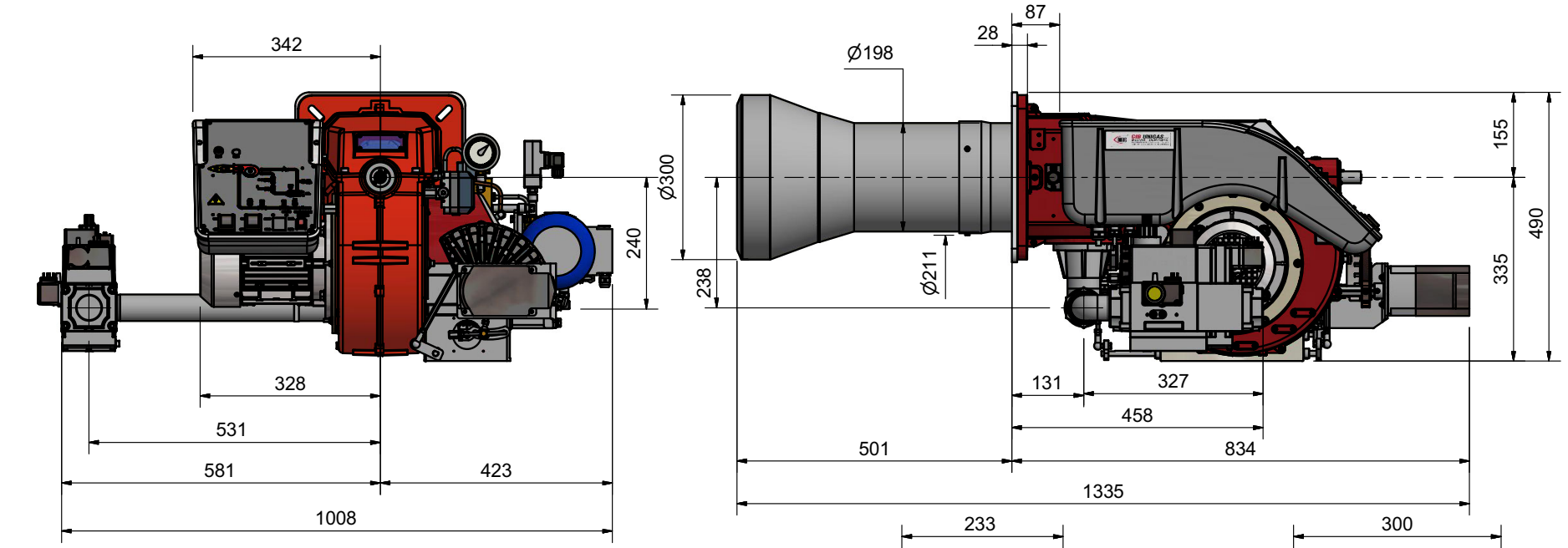

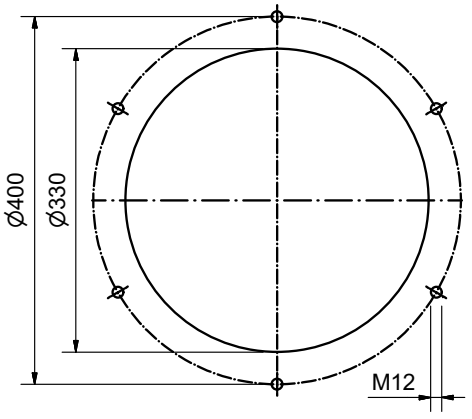

Boiler recommended drilling template

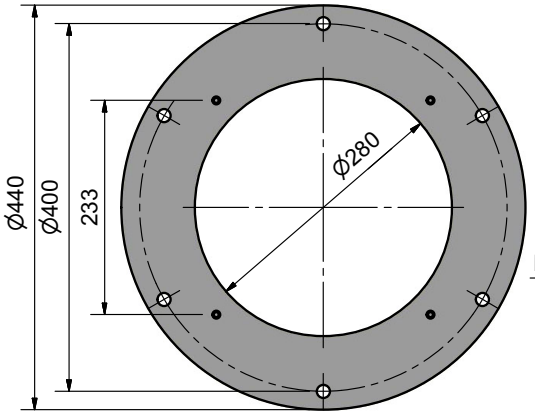

Counterflange OPTIONAL

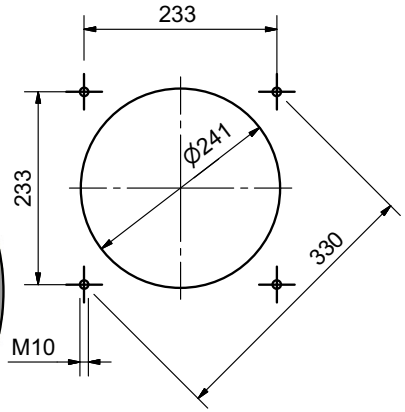

Boiler recommended drilling template

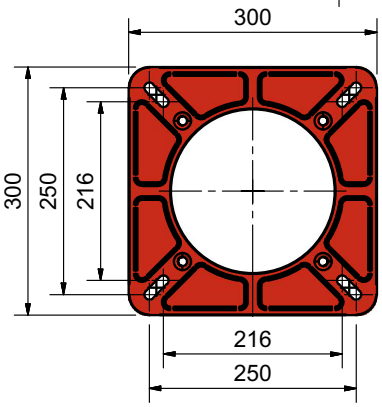

Burner flange

Fig. 4 - 3I2MG-09 v1 **Hydraulic diagram**

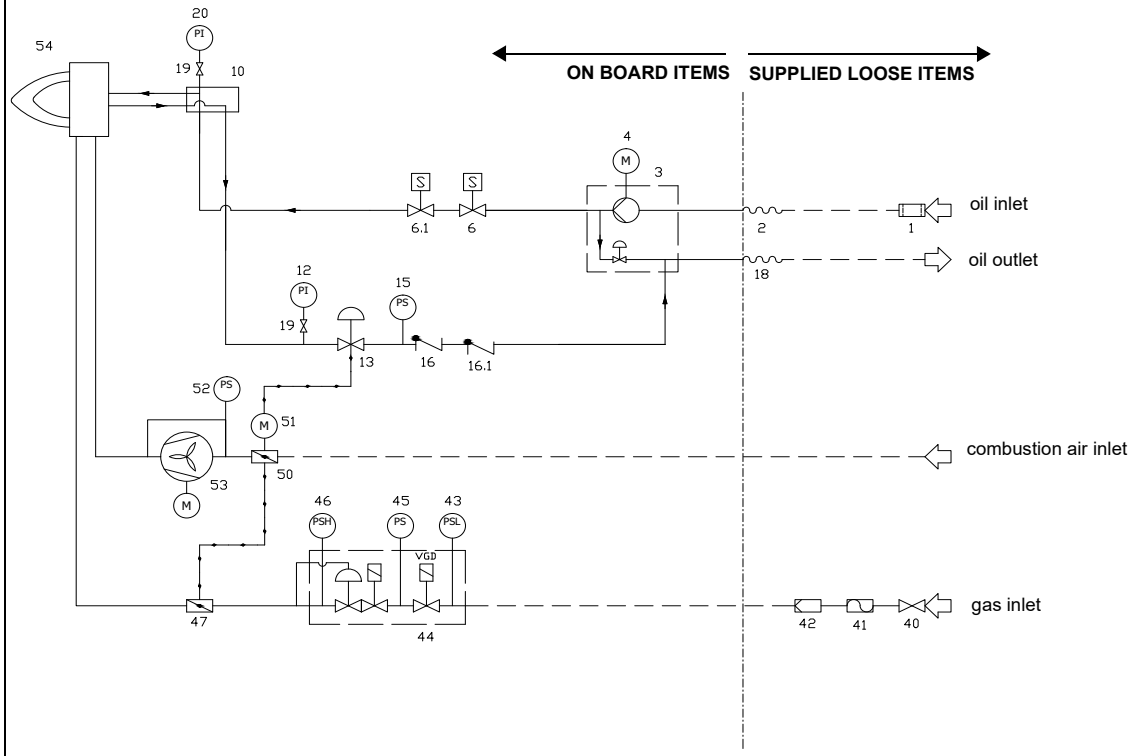

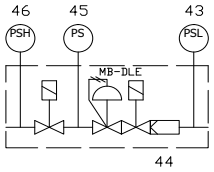

According to the gas train size and the burner type, MB-DLE safety valves are supplied. In this case, the item 42 is integrated in the valves. See the following drawing.

BY OTHERS

BY BURNER CONSTRUCTOR

POS	LEGEND
	OIL TRAIN
1	Filter
2	Flexible hose
3	Pump and pressure governor
4	Electrical motor
5	Flexible hose
6	Solenoid valve
6.1	Solenoid valve
7	Flexible hose
10	Oil distributor
11	Flexible hose
12	Pressure gauge
13	Pressure governor
15	Pressure switch
16	One-way valve
16.1	One-way valve
17	Flexible hose
18	Flexible hose
19	Manual valve
20	Pressure gauge
	MAIN GAS TRAIN
40	Manual valve
41	Bellows unit
42	Filter
43	Pressure switch - PGMIN
44	Safety valve with built in gas governor
45	Proving system pressure switch - PGCP
46	Pressure switch - PGMAX
47	Butterfly valve
	COMBUSTION AIR TRAIN
50	Air damper
51	Actuator
52	Pressure switch - PA
53	Draught fan with electromotor
54	Burner

Note: The following POS are optional: 19, 20, 40, 41, 46

GAS TRAIN CONNECTION

ATTENTION: Before executing the connections to the gas pipe network, be sure that the manual cutoff valves are closed.

The following diagrams show some examples of possible gas trains with the components supplied with the burner and those fitted by the installer. The gas trains and the connection of the burner to the fuel supply line must be done in accordance with current local regulations.

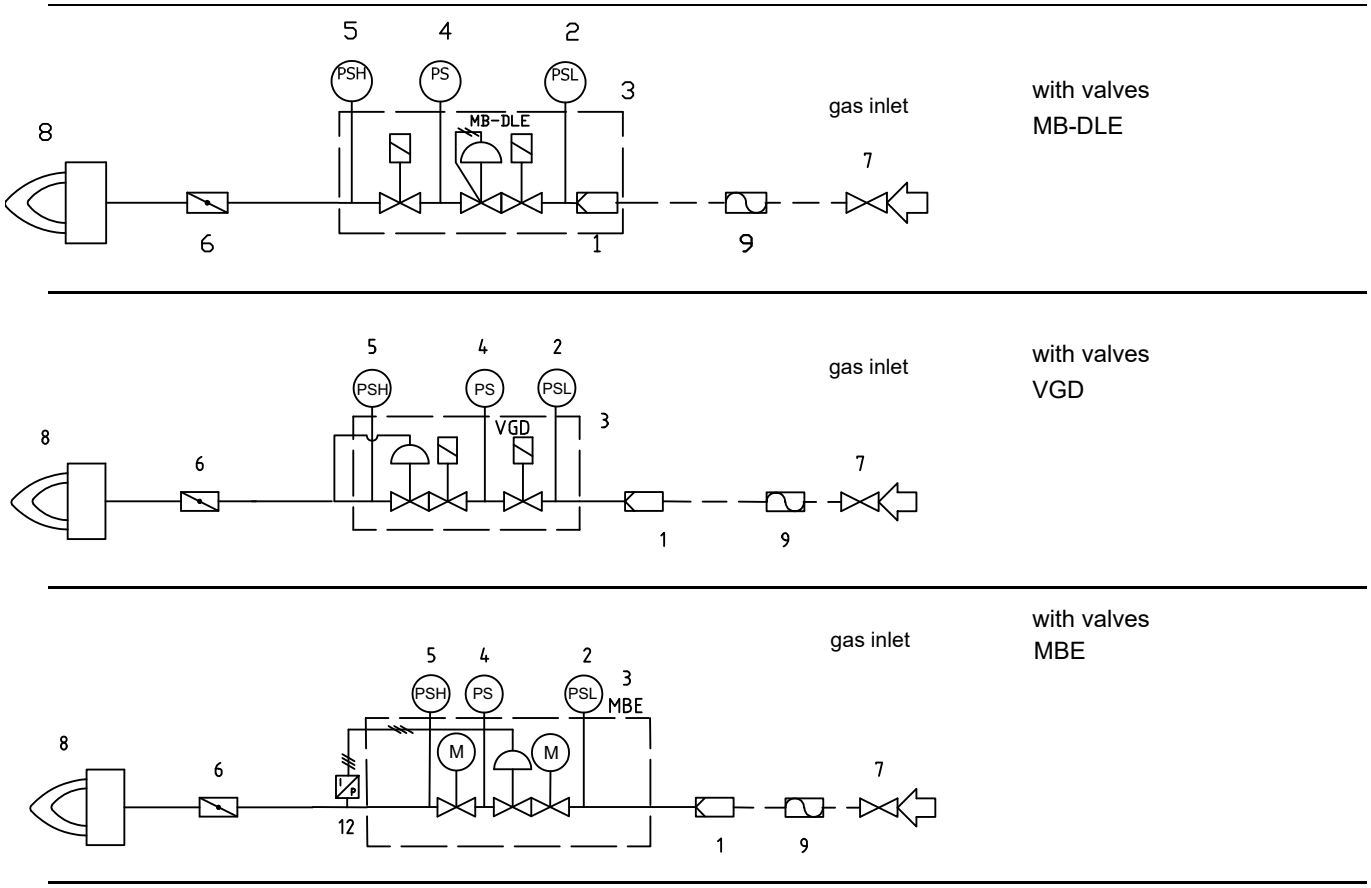

Legend:
1 Filter
2 Low pressure switch - PGMIN
3 Safety valve
4 Proving system pressure switch - PGCP (*optional)
5 High pressure switch PGMAX: mandatory for MBE, optional for VGD and DMV-DLE
6 Butterfly valve
7 Upstream manual valve
8 Main burner
9 Antivibration joint (*optional)
12 MBE pressure sensor

Performance Curves

C92A

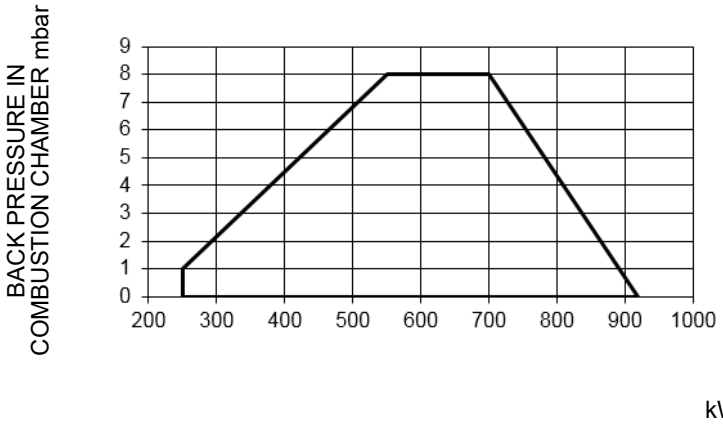

C120A

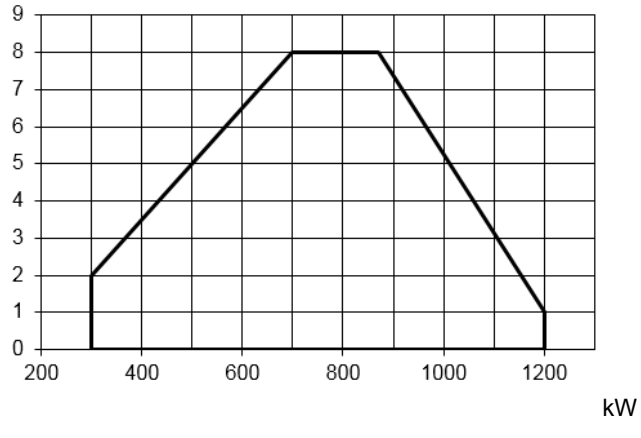

To get the input in kcal/h, multiply value in kW by 860.

Data are referred to standard conditions: atmospheric pressure at 1013mbar, ambient temperature at 15° C

NOTE: The performance curve is a diagram that represents the burner performance in the type approval phase or in the laboratory tests, but does not represent the regulation range of the machine. On this diagram the maximum output point is usually reached by adjsuting the combustion head to its "MAX" position (see paragraph "Adjusting the combustion head"); the minimum output point is reached setting the combustion head to its "MIN" position. During the first ignition, the combustion head is set in order to find a compromise between the burner output and the generator specifications, that is why the minimum output may be different from the Performance curve minimum

Pressure in the Network / gas flow rate curves

C92A MG..

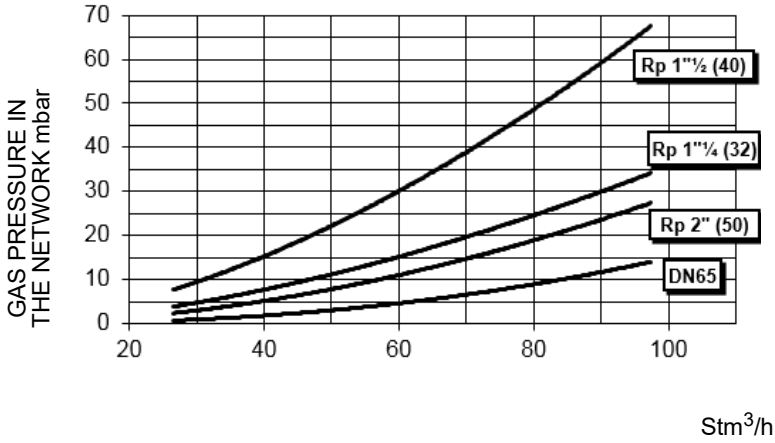

C120A MG..

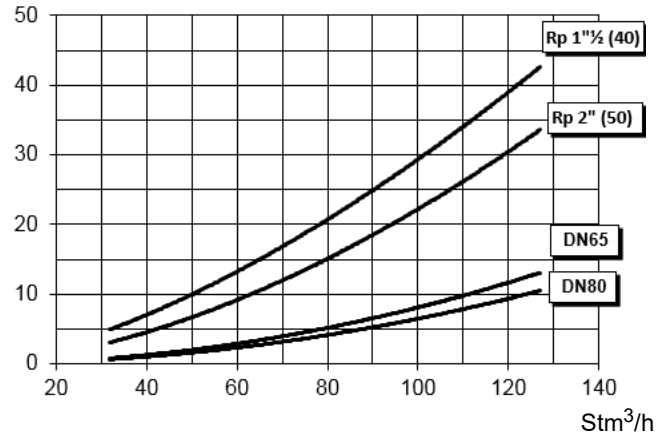

ATTENTION: the gas rate value is quoted on the x-axis, the related network pressure is quoted on the y-axis (pressure value in the combustion chamber is not included). To know the minimum pressure at the gas train inlet, necessary to get the requested gas rate, add the pressure value in the combustion chamber to the value read on the y-axis.

Pressure - rate in combustion head curves

Curves are referred to pressure = 0mbar in the combustion chamber!

C92A M-..

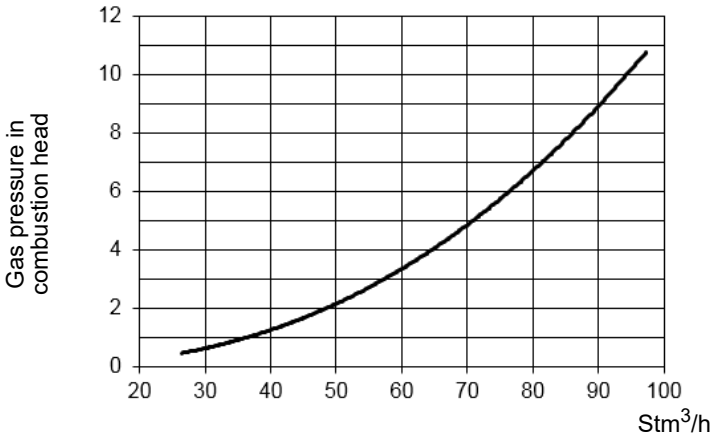

C120A M-..

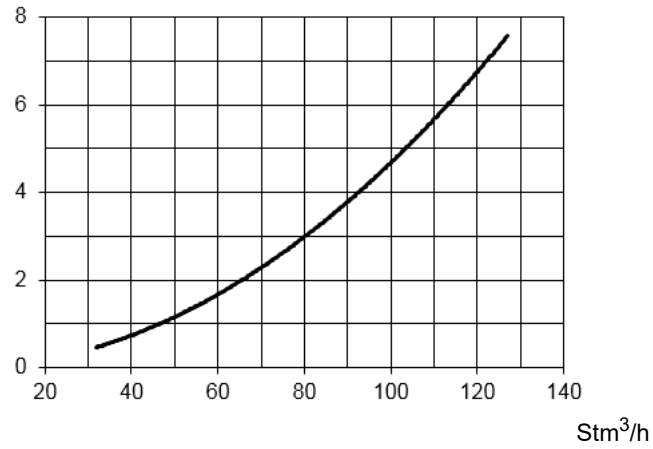

How to read the burner "Performance curve"

To check if the burner is suitable for the boiler to which it must be installed, the following parameters are needed:

- furnace input, in kW or kcal/h (kW = kcal/h/860);
- backpressure (data are available on the boiler ID plate or in the user's manual).

Example:

Furnace input: 600kW

Backpressure: 4 mbar

In the "Performance curve" diagram, draw a vertical line matching the furnace input value and an horizontal line matching the backpressure value. The burner is suitable if the intersection point A is inside the performance curve.

Data are referred to standard conditions: atmospheric pressure at 1013 mbar, ambient temperature at 15° C.

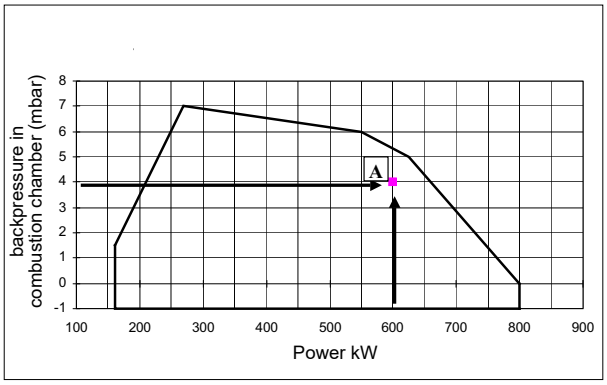

Checking the proper gas train size

To check the proper gas train size, it is necessary to the available gas pressure value upstream the burner's gas valve. Then subtract the backpressure. The result is called **pgas.** Draw a vertical line matching the furnace input value (600kW, in the example), quoted on the x-axis, as far as intercepitng the network pressure curve, according to the installed gas train (DN65, in the example). From the interception point, draw an horizontal line as far as matching, on the y-axis, the value of pressure necessary to get the requested furnace input. This value must be lower or equal to the **pgas** value, calculated before.

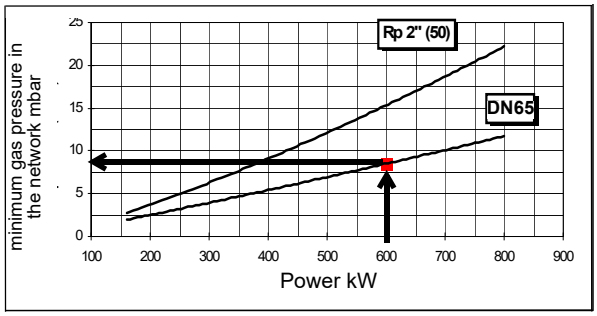

Combustion head gas pressure curves

Combustion head gas pressure depends on gas flow and combustion chamber backpressure. When backpressure is subtracted, i depends only on gas flow, provided combustion is properly adjusted, flue gases residual O2 percentage complies with "Recommendec combustion values" table and CO in the standard limits). During this stage, the combustion head, the gas butterfly valve and the actuator are at the maximum opening. Refer to , showing the correct way to measure the gas pressure, considering the values o pressure in combustion chamber, surveyed by means of the pressure gauge or taken from the boiler's Technical specifications.

.

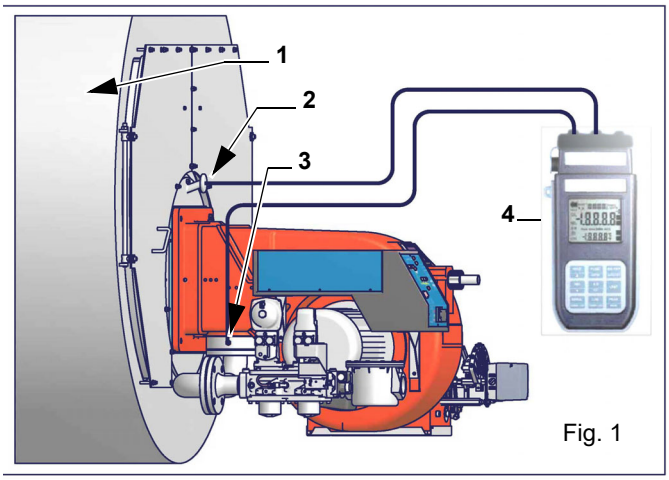

Fig. 1

Note: the figure is indicative only.Key

1 Generator
2 Pressure outlet on the combustion chamber
3 Gas pressure outlet on the butterfly valve
4 Differential pressure gauge

ATTENTION: THE BURNED GAS RATE MUST BE READ AT THE GAS FLOW METER. WHEN IT IS NOT POSSIBLE, THE USER CAN REFERS TO THE PRESSURE-RATE CURVES AS GENERAL INFORMATION ONLY.

Measuring gas pressure in the combustion head

In order to measure the pressure in the combustion head, insert the pressure gauge probes: one into the combustion chamber's pressure outlet to get the pressure in the combustion chamber and the other one into the butterfly valve's pressure outlet of the burner. On the basis of the measured differential pressure, it is possible to get the maximum flow rate: in the pressure - rate curves (showed on the next paragraph), it is easy to find out the burner's output in Stm^3/h (quoted on the x axis) from the pressure measured in the combustion head (quoted on the y axis). The data obtained must be considered when adjusting the gas flow rate.

PART II: INSTALLATION

MOUNTING AND CONNECTING THE BURNER

Transport and storage

If the product must be stored, avoid humid and corrosive places. Observe the temperatures stated in the burner data table at the beginning of this manual. The packages containing the burners must be locked inside the means of transport in such a way as to guarantee the absence of dangerous movements and avoid any possible damage.

In case of storage, the burners must be stored inside their packaging, in storerooms protected from the weather. Avoid humid or corrosive places and respect the temperatures indicated in the burner data table at the beginning of this manual.

Packing

The burners are despatched in wooden crates whose dimensions are:

- **C92A-C120A: 1330 mm x 820 mm x 600 mm (L x P x H)**

Such packages fear moisture and are not suitable for stacking.Packing cases of this type are affected by humidity and are not suitable for stacking.

The following are placed in each packing case:These packagings are damaged by moisture and the maximum number of overlapping packagings indicated on the outside of the packaging may not be exceeded.

- burner with detached gas train;
- gasket or ceramic fibre plait (according to burner type) to be inserted between the burner and the boiler;
- envelope containing this manual and other documents.
- oil flexible hoses;

To get rid of the burner's packing, follow the procedures laid down by current laws on disposal of materials.

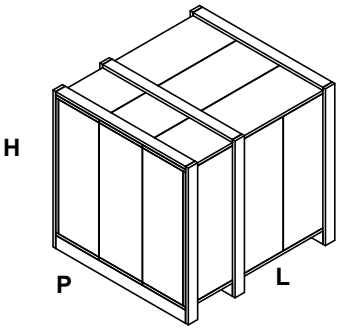

Handling the burner

WARNING! The handling operations must be carried out by specialised and trained personnel. If these operations are not carried out correctly, the residual risk for the burner to overturn and fall down still persists. To move the burner, use means suitable to support its weight (see paragraph "Technical specifications").
The unpacked burner must be lifted and moved only by means of a fork lift truck.

The burner is mounted on a support provided for handling the burner by means of a fork lift truck: the forks must be inserted into the A anb B ways. Remove the stirrup only once the burner is installed to the boiler.

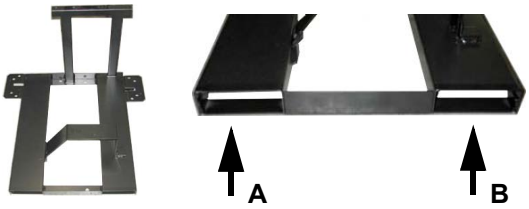

Fitting the burner to the boiler

To install the burner into the boiler, proceed as follows:

1 make a hole on the closing door of the combustion chamber as described on paragraph “Overall dimensions”)
2 place the burner to the boiler: lift it up and handle it according to the procedure described on paragraph “Handling the burner”;
3 place the 4 stud bolts (5) on boiler’s door, according to the burner drilling template described on paragraph “Overall dimensions”;
4 fasten the 4 stud bolts;
5 place the gasket on the burner flange;
6 install the burner into the boiler;
7 fix the burner to the stud bolts, by means of the fixing nuts, according to the next picture.
8 After fitting the burner to the boiler, ensure that the gap between the blast tube and the refractory lining is sealed with appropriate insulating material (ceramic fibre cord or refractory cement).

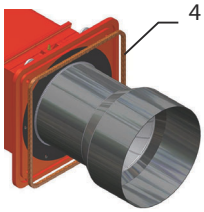

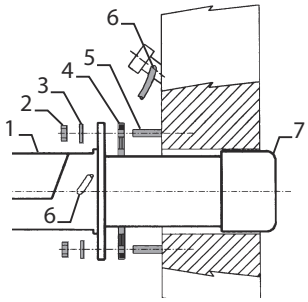

Keys

1 Burner
2 Fixing nut
3 Washer
4 Sealing gasket
5 Stud bolt
7 Blast tube

Matching the burner to the boiler

The burners described in this manual have been tested with combustion chambers that comply with EN676 regulation and whose dimensions are described in the diagram . In case the burner must be coupled with boilers with a combustion chamber smaller in diameter or shorter than those described in the diagram, please contact the supplier, to verify that a correct matching is possible, with respect of the application involved. To correctly match the burner to the boiler verify the type of the blast tube . Verify the necessary input and the pressure in combustion chamber are included in the burner performance curve; otherwise the choice of the burner must be revised consulting the burner manufacturer. To choose the blast tube lenght follow the instructions of the boiler manufacturer. In absence of these consider the following:

- Cast-iron boilers, three pass flue boilers (with the first pass in the rear part): the blast tube must protrude no more than **Dist** = 100 mm into the combustion chamber. (please see the picture below)
- Pressurised boilers with flame reversal: in this case the blast tube must penetrate **Dm** 50 ÷ 100 mm into combustion chamber in respect to the tube bundle plate.(please see the picture below)

A: ceramic fibre
B: refractory wall

Dist. = 100 mm
DM = 50 ÷ 100 mm

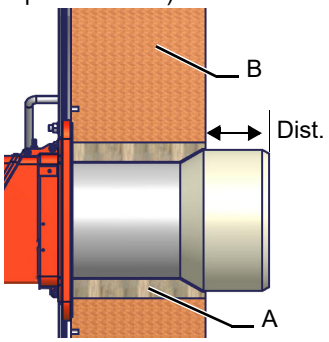

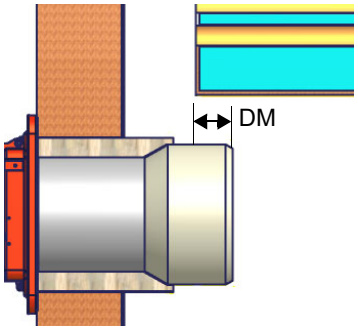

WARNING! Carefully seal the free space between blast tube and the refractory lining with ceramic fibre rope or other suitable means.

The length of the blast tubes does not always allow this requirement to be met, and thus it may be necessary to use a suitably-sized spacer to move the burner backwards or to design a blast tube tha suites the utilisation (please, contact the manifacturer).

GAS TRAIN CONNECTIONS

WARNING: before executing the connections to the gas pipe network, be sure that the manual cutoff valves are closed.

ATTENTION: it is recommended to mount filter and gas valves to avoid that extraneous material drops inside the valves, during maintenance and cleaning operation of the filters (both the filters outside the valves group and the ones built-in the gas valves).

ATTENTION: once the gas train is mounted, the gas proving test must be performed, according to the procedure set by laws in force.

CAUTION: The direction of gas flow must follow the arrow on the body of the components mounted on the gas ramp (valves, filters, gaskets...).

NOTE: *the bellows unit, the manual cutoff valve and the gaskets are not part of the standard supply*

Following the "Hydraulic Schematics" section, the figure shows the components fitted by the installer.

Keys

1 Gas filter
3 Gas valves group
9 Bellows unit
10 Manual valve
11 Gasket(a, b, c, d)

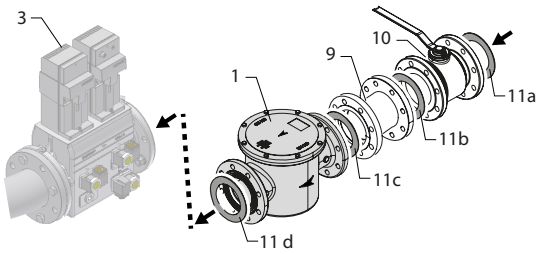

Procedure to install the double gas valve unit: **two (2) gas flanges are required; they may be threaded or flanged depending on size**

- **first step: install the flanges to prevent entry of foreign bodies in the gas line**
- **on the gas pipe, clean the already assembled parts and then install the valve unit check gas flow direction: it must follow the arrow on the valve body**
- **VGD20: make sure the O-rings are correctly positioned between the flanges and the valve**

In all cases:

- ensure that the gaskets are correctly positioned between the flanges;
- fasten all the components with screws, according to the following diagrams:
- make sure bolts on the flanges are properly tightened
- check that the connections of all components are leak .

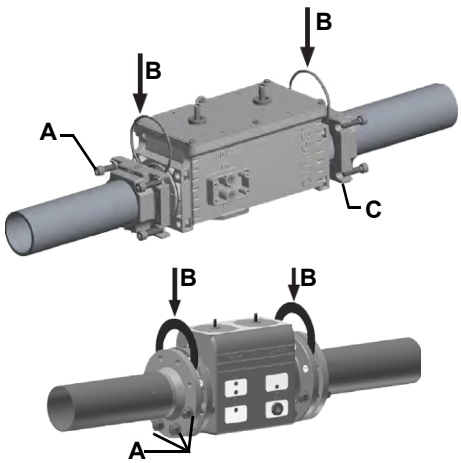

CAUTION: Use seals suitable for the gas used.

WARNING: Slowly open the fuel cock to avoid breaking the pressure regulator.

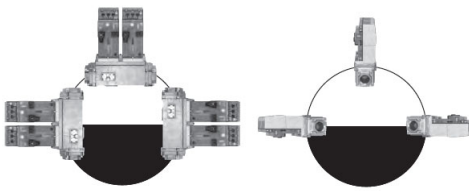

Gas Filter (if provided)

The gas filters remove the dust particles that are present in the gas, and prevent the elements at risk (e.g.: burner valves, counters and regulators) from becoming rapidly blocked. The filter is normally installed upstream from all the control and on-off devices.

ATTENTION: it is reccomended to install the filter with gas flow parallel to the floor in order to prevent dust fall on the safety valve during maintenance operation.

Once the train is installed, connect the gas valves group and pressure switches plugs.

MultiBloc MB-DLE - Assembling the gas train

Mounting

1 Mount flange onto tube lines: use appropriate sealing agent
2 Insert MB-DLE: note position of O rings
3 Remove MultiBloc between the threaded flanges
4 After installation, perform leakage and functional test
5 Disassembly in reverse order

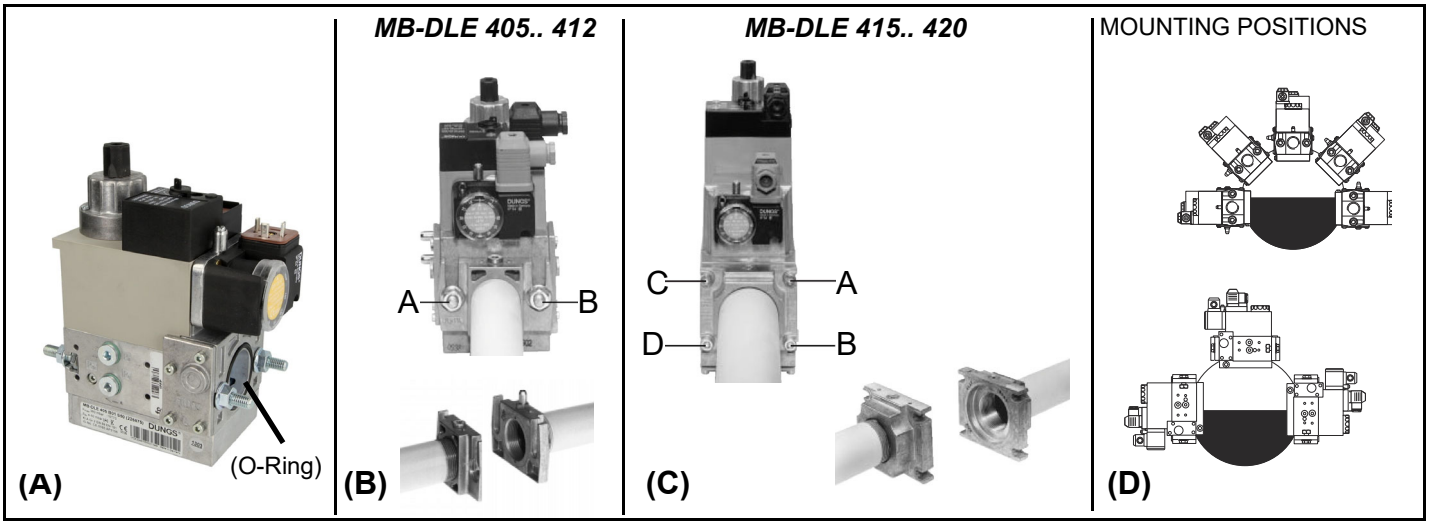

DUNGS MBE

Components and position of pressure switches

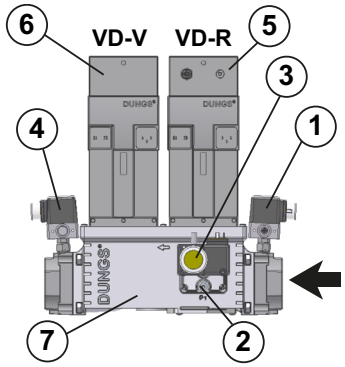

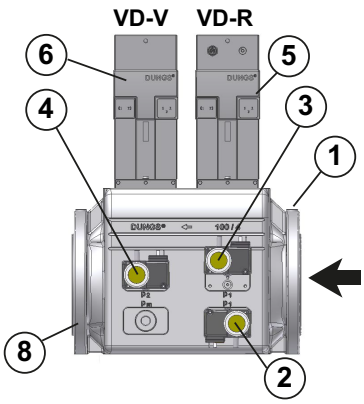

1 PGMIN minimum gas pressure switch
2 PGMIN minimum gas pressure switch (alternative to 1)
3 PGCP leakage control gas pressure switch
4 PGMAX maximum gas pressure switch
5 Actuator with integrated pressure stabiliser
6 On-Off actuator
7 Valve body (Threaded)
8 Valve body (Flange)

On equipment versions Facile VD-R must be installed upstream valve

PS pressure sensor connection to VD-R actuator and gas train

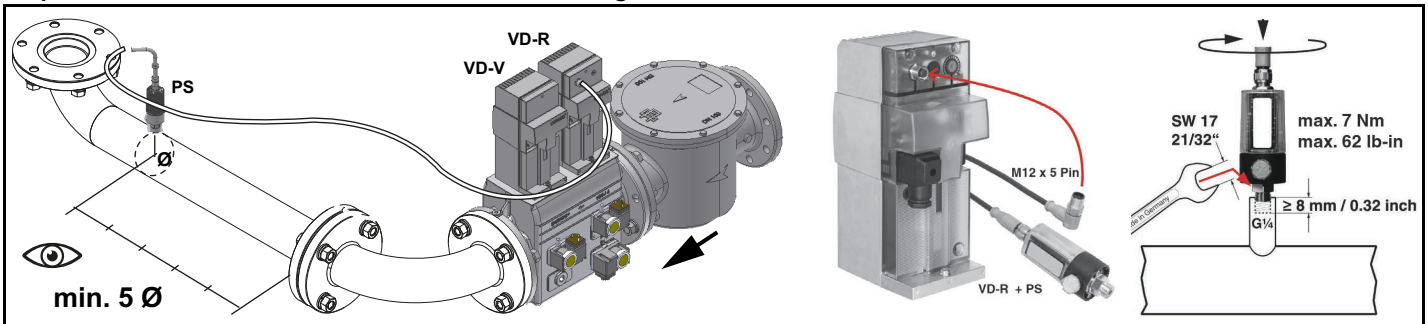

Attention: In the case of the MBE... valve, a pressure limit switch downstream of the safety valve is mandatory.

Pressure taps MultiBloc MBE

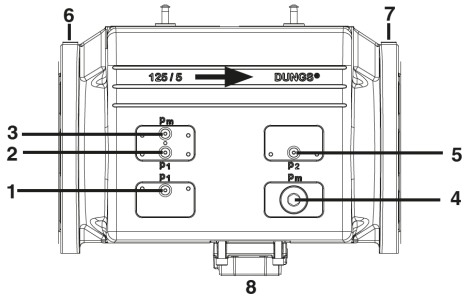

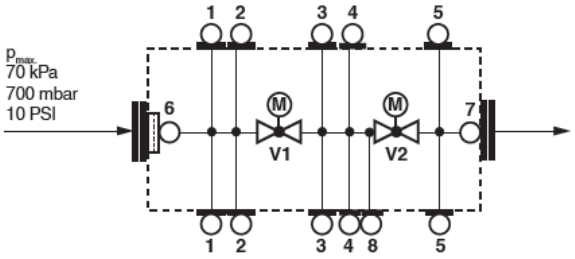

1, 2, 3, 5 Sealing plug G1/8 ISO 228
4 G3/4 for system accessories
6, 7 Sealing plug G1/4 ISO 228
8 For version VB…L only: connection for vent line
VB-2½L=1¼"NPT
VB-3L=1½"NPT
VB-4L=2"NPT
VB-5L=2"NPT

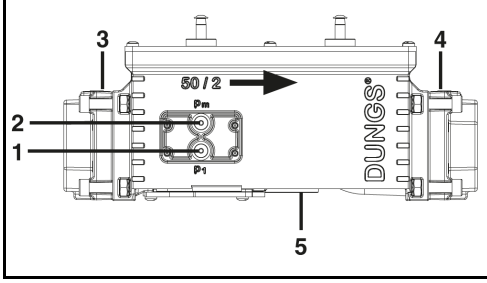

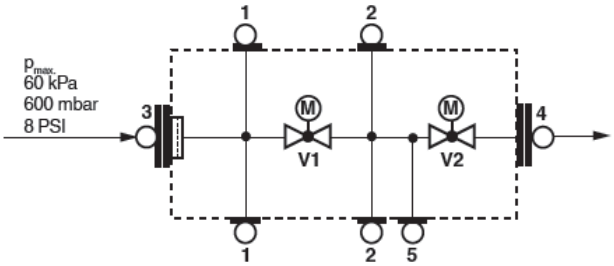

1, 2, 3, 4 Sealing plug G1/8 ISO 228
5 Locking screw
For version VB-2L only: connection for vent line **NPT 1**

Siemens VGD20.. e VGD40..

Components and position of pressure switches

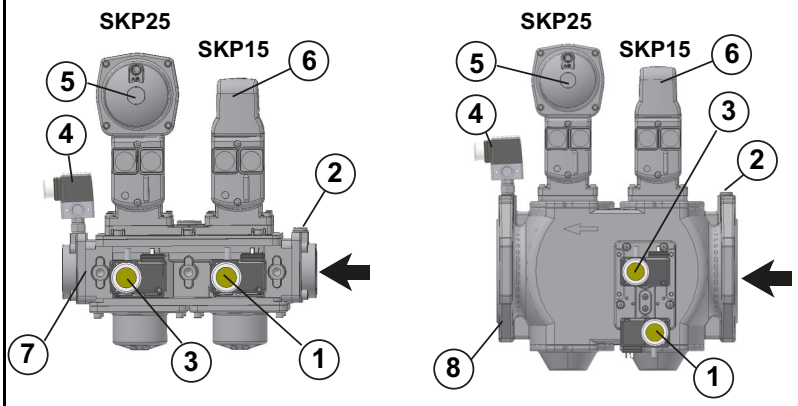

1 PGMIN minimum gas pressure switch
2 PGMIN minimum gas pressure switch (alternative to 1)
3 PGCP leakage control gas pressure switch
4 PGMAX maximum gas pressure switch
5 Actuator with integrated pressure stabiliser
6 On-Off actuator
7 Valve body (Threaded)
8 Valve body (Flange)

Connection of actuator SKP2... to gas train

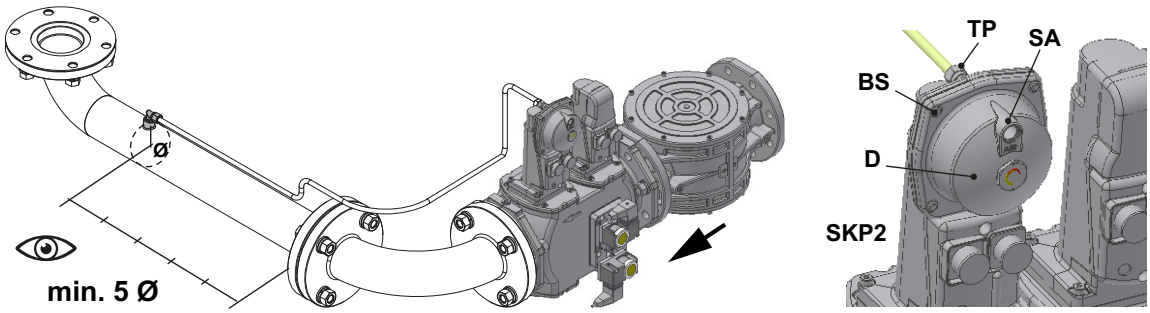

Siemens SKP2.. (pressure governor)

- Connect the reference gas pipe (**TP** in figure; 8mm-external size pipe supplied loose), to the gas pressure nipples placed on the gas pipe, downstream the gas valves: gas pressure must be measured at a distance that must be at least 5 times the pipe size.
- Leave the blowhole free (**SA** in figure). Should the spring fitted not permit satisfactory regulation, ask one of our service centres for a suitable replacement.

- D: pressure adjustment spring seat

WARNING: removing the four screws BS causes the device to be unserviceable!

version with SKP2 (built-in pressure stabilizer)Siemens VGD../VRD.. SKPx5 (Auxiliary-optional micro switch)Gas valve

If the auxiliary microswitch (POC) is required, a dedicated actuator, different from the one usually supplied, must be ordered. The connection is shown in the figure.

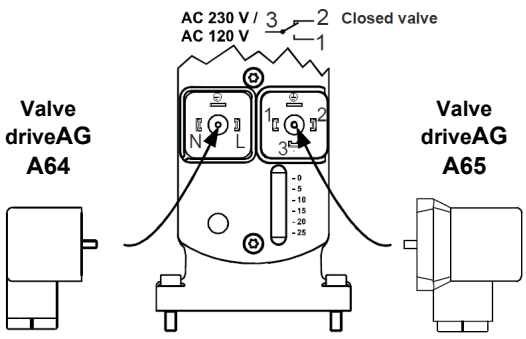

AGA64 - Valve drivePlug connection ON-OFF
AGA65 - End of strokePlug connection POC

End of stroke (POC)

The connection plug of the POC is different from that of the ON-OFF drive

Siemens VGD *Pressure taps*

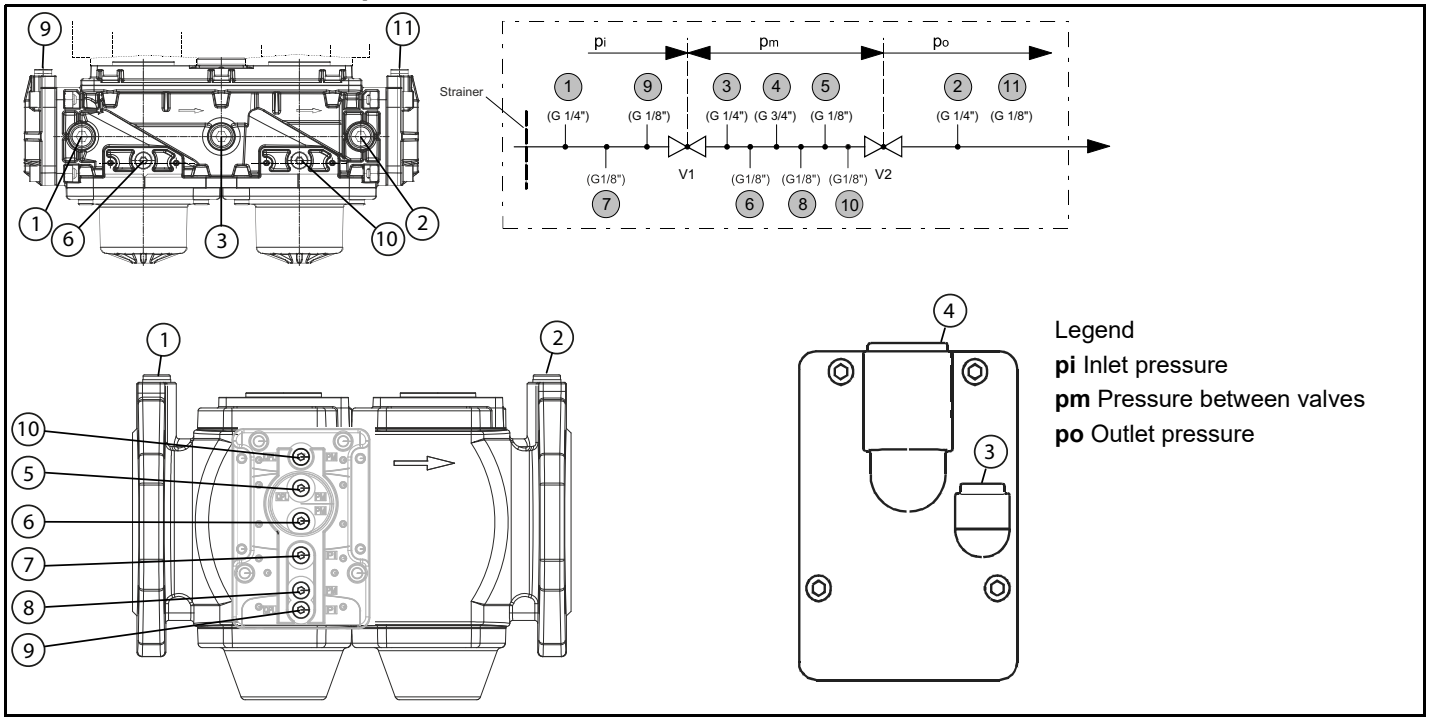

Legend
pi Inlet pressure
pm Pressure between valves
po Outlet pressure

Integrated proving system (burners equipped with LME7x, LMV, LDU)

This paragraph describes the integrated proving system operation sequence:

- At the beginning both the valves (EV1 and EV2) must be closed.
- Test space evacuating: EV2 valve (burner side) opens and keep this position for a preset time (td4), in order the bring the test space to ambient pressure.Test atmospheric pressure: EV2 closes and keep this position for a preset time (test time td1). The pressure switch PGCP has not to detect a rise of pressure.
- Test space filling: EV1 opens and keep this position for a preset time (td3), in order to fill the test space.
- Test gas pressure: EV1 closes and keep this position for a preset time (td2). The pressure switch PGCP has not to detect a pressure drop down.

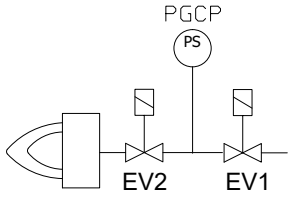

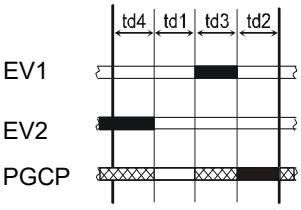

If all of the test phases are passed the proving system test is successful, if not a burner lockout happens.

On LMV5x and LMV2x/3x and LME73 (except LME73.831BC), the valve proving can be parameterized to take place on startup, shutdown, or both. On LME73.831BC the valve proving is parameterized to take place on startup only.

OIL TRAIN CONNECTIONS

Hydraulic diagrams for light oil supplying circuits

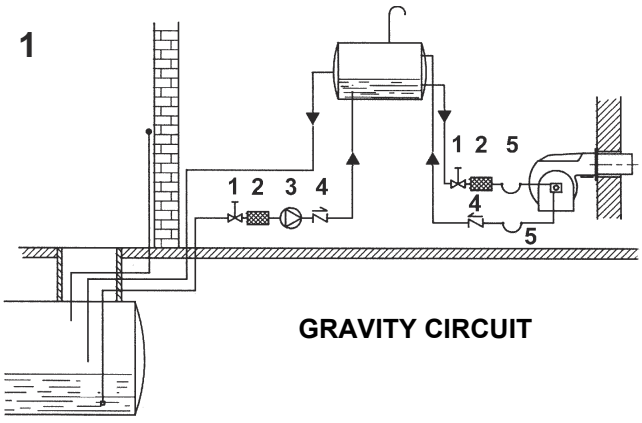

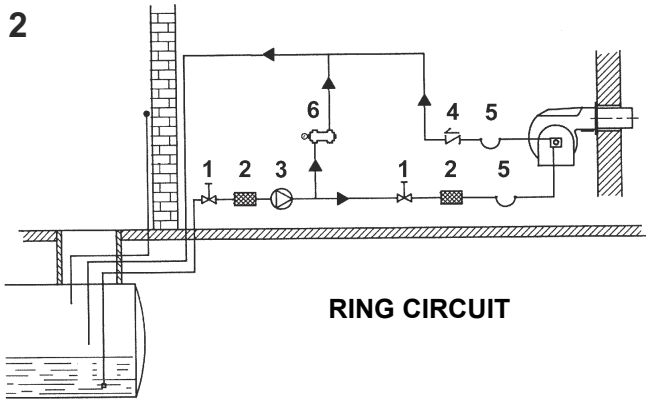

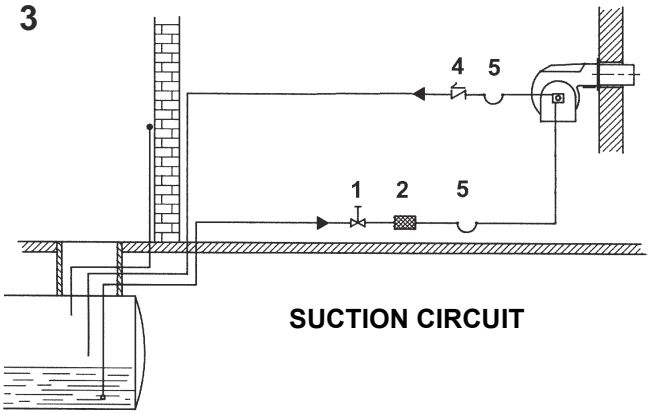

Key

1 Manual valve
2 Light oil filter
3 Light oil feeding pump
4 One way valve
5 Flexible hoses
6 Relief valve

NOTE: in plants where gravity or ring feed systems are provided, install an automatic interception device.

Installation diagram of light oil pipes

please read carefully the "warnings" chapter at the beginning of this manual.

Fig. 6 - Double-pipe system

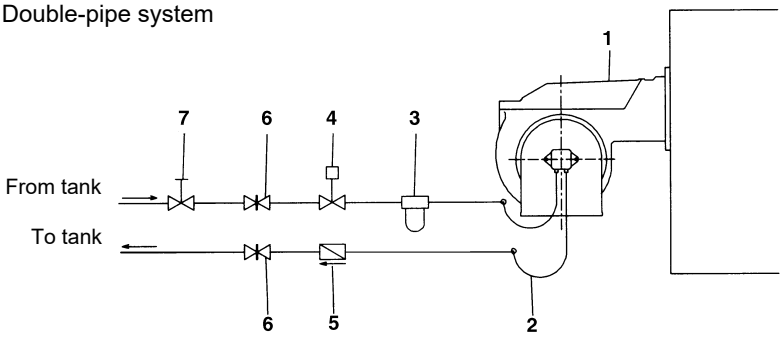

The burner is supplied with filter and flexible hoses, all the parts upstream the filter and downstream the return flexible hose, must be installed by the customer. As far as the hoses connection, see the related paragraph.

Key

1 Burner
2 Flexible hoses (fitted)
3 Light oil filter (fitted)
4 Automatic interceptor (*)
5 One-way valve (*)
6 Gate valve
7 Quick-closing gate-valve (outside the tank or boiler rooms)

(*) Only for installations with gravity, siphon or forced circulation feed systems. If the device installed is a solenoid valve, a timer must be installed to delay the valve closing. The direct connection of the device without a timer may cause pump breaks.

Depending on the installed pump, it is possible to design the plant for single or double pipe feeding line

Single-pipe system: a single pipe drives the oil from the tank to the pump's inlet. Then, from the pump, the pressurised oil is driven to the nozzle: a part comes out from the nozzle while the othe part goes back to the pump. In this system, the by-pass plug, if provided, must be removed and the optional return port, on the pump's body, must be sealed by steel plug and washer.

Double-pipe system: as for the single pipe system, a pipe that connects the tank to the pump's inlet is used besides another pipe that connects the pump's return port to the tank, as well. The excess of oil goes back to the tank: this installation can be considered self-ble-

eding. If provided, the inside by-pass plug must be installed to avoid air and fuel passing through the pump.

Burners come out from the factory provided for double-pipe systems. They can be suited for single-pipe system (recommended in the case of gravity feed) as decribed before.To change from a 1-pipe system to a 2-pipe-system, insert the by-pass plug **G** (as for ccw-rotation- referring to the pump shaft).

Caution: Changing the direction of rotation, all connections on top and side are reversed.**HP UHE series pumps**: a kit (Art.-Nr.: 0841211) is required for the transition from 2-pipe to 1-pipe system

Suntec AJ6

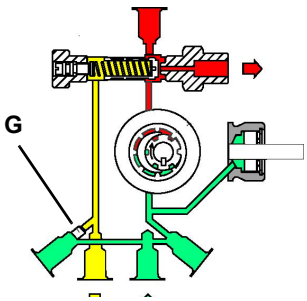

Suntec E..

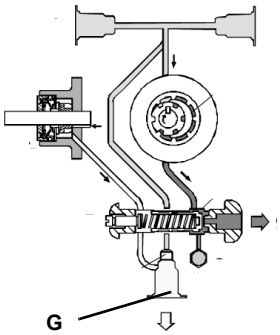

Suntec TA

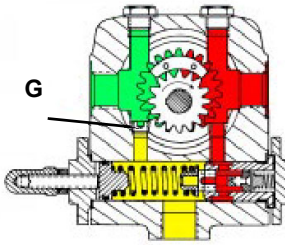

About the use of fuel pumps

- Do not use fuel with additives to avoid the possible formation over time of compounds which may deposit between the gear teeth, thus obstructing them.
- After filling the tank, wait before starting the burner. This will give any suspended impurities time to deposit on the bottom of the tank, thus avoiding the possibility that they might be sucked into the pump.
- On initial commissioning a "dry" operation is foreseen for a considerable length of time (for example, when there is a long suction line to bleed). To avoid damages inject some lubrication oil into the vacuum inlet.
- Care must be taken when installing the pump not to force the pump shaft along its axis or laterally to avoid excessive wear on the joint, noise and overloading the gears.
- Pipes should not contain air pockets. Rapid attachment joint should therefore be avoided and threaded or mechanical seal junctions preferred. Junction threads, elbow joints and couplings should be sealed with removable sg component. The number of junctions should be kept to a minimum as they are a possible source of leakage.
- Do not use PTFE tape on the suction and return line pipes to avoid the possibility that particles enter circulation. These could deposit on the pump filter or the nozzle, reducing efficiency. Always use O-Rings or mechanical seal (copper or aluminium gaskets) junctions if possible.
- An external filter should always be installed in the suction line upstream the fuel unit.

***ATTENTION**: before the burner first start, it is mandatory to fill the adduction pipes with diesel fuel and bleed out residual air bubbles. Prior to switching on the burner, check direction of rotation of the pump motor by briefly pressing the starter switch; ensure there are no anomalous sounds during equipment operation, and only then turn on the burner. Neglect to comply with this requirement will invalidate the burner warranty.*

Suntec E6 - E7 1001	
Oil viscosity	3 - 75 cSt
Oil temperature	0 - 90°C
Inlet maximum pressure	1,5 bar
Maximum return pressure	1,5 bar
Minimum inlet pressure	- 0,45 to avoid gasing
Rotation speed	3600 rpm max.

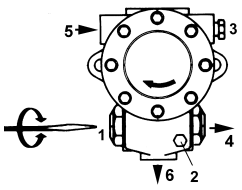

Key
1. Pressure governor
2. Pressure gauge
3. Vacuum gauge
5. Nozzle
7. Suction
8. Return

Suntec AJ6

Viscosity	2 - 75 cSt
Oil temperature	60°C max
Inlet maximum pressure	2 bar
Inlet minimum pressure	- 0.45 bar to avoid gasing
Rated speed	3600 rpm max.

Key
1 Suction
2 Return
3 To the nozzle
4 Pressure gauge
5 Vacuum pressure gauge
6 Pressure governor

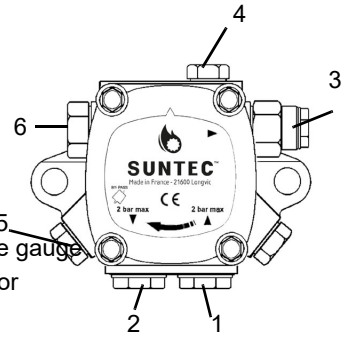

Suntec TA..

Oil viscosity	3 ÷ 75 cSt
Oil temperature	0 ÷ 150°C
Min. suction pressure	- 0.45 bar to avoid gasing
Max. suction pressure	5 bar
Max. return pressure	5 bar
Rotation speed	3600 rpm max.

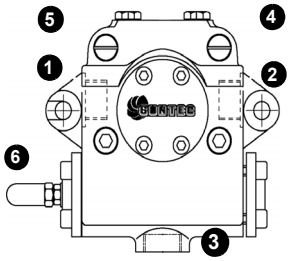

Key
1. Inlet G1/2
2. To the nozzle G1/2
3. Return G1/2
4. Pressure gauge port G1/4
5. Vacuum gauge port G1/4
6. Pressure governor

Connecting the oil flexible hoses to the pump

To connect the flexible oil hoses to the pump, proceed as follows, according to the pump provided:

1 remove the closing nuts A and R on the inlet and return connections of the pump;

2 screw the rotating nut of the two flexible hoses on the pump **being careful to avoid exchanging the lines**: see the arrows marked on the pump.

For further information, refer to the technical documentation of the pump.

.

Suntec E..	Suntec AJ6	Suntec TA
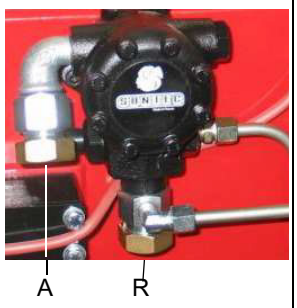		

Diesel filters

	Item	Note	Connection	Max. operating pressure	Max. operating temperature	Filtering degree	Protection
6	20201PL	-	3/8”	1 bar	-20, 60 °C	100 µ	-

ELECTRICAL CONNECTIONS

WARNING! Respect the basic safety rules. make sure of the connection to the earthing system. do not reverse the phase and neutral connections. fit a differential thermal magnet switch adequate for connection to the mains.

WARNING! before executing the electrical connections, pay attention to turn the plant's switch to OFF and be sure that the burner's main switch is in 0 position (OFF) too. Read carefully the chapter "WARNINGS", and the "Electrical connections" section.

ATTENTION: Connecting electrical supply wires to the burner teminal block MA, be sure that the ground wire is longer than phase and neutral ones.

1 To execute the electrical connections, proceed as follows:remove the cover from the electrical board, unscrewing the fixing screws;
2 execute the electrical connections to the supply terminal board as shown in the attached wiring diagrams;
3 check the direction of the fan motor (see next paragraph);
4 refit the panel cover.

WARNING: (only for double stage and progressive burners) The burner is provided with an electrical bridge between terminals 6 and 7; when connecting the high/low flame thermostat, remove this bridge before connecting the thermostat.

CAUTION: check the motor thermal cut-out adjustment

NOTE: the burners are supplied for three-phase 380/400/415/480 V supply, and in the case of three-phase 220/230/240 V supply it is necessary to modify the electrical connections into the terminal box of the electric motor and replace the overload tripped relay.

Note on electrical supply

In the case where the power supply of the AUXILIARIES of the phase-phase burner (without a neutral), for the flame detection it is necessary to connect the RC circuit Siemens between the terminal 2 (terminal X3-04-4 in case of LMV2x, LMV3x, LMV5x, LME7x) of the base and the earth terminal, RC466890660. For LMV5 control box, please refer to the clabeling recommendations avaible on the Siemens CD attached to the burner

Key

C - Capacitor (22 nF , 250 V)
LME / LMV - Siemens control box
R - Resistor (1 MΩ)
M: Terminal 2 (LGB, LME), Terminal X3-04-4 (LMV2x, LMV3x, LMV5, LME7x)
RC466890660 - RC Siemens filter

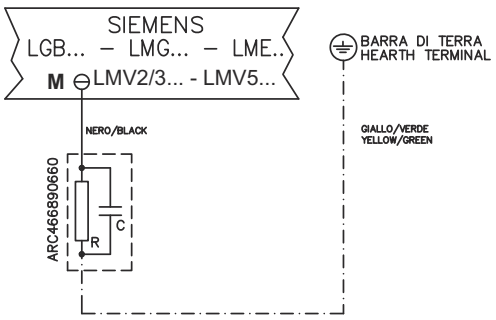

PART III: OPERATION

DANGER! Incorrect motor rotation can seriously damage property and injure people.
DANGER: During commissioning operations, do not let the burner operate with insufficient air flow (danger of formation of carbon monoxide); if this should happen, make the gas decrease slowly until the normal combustion values are achieved.
WARNING: before starting the burner up, be sure that the manual cutoff valves are open and check that the pressure upstream the gas train complies the value quoted on paragraph “Technical specifications”. Be sure that the mains switch is closed.

IN THE EVENT OF A BLOCKAGE, THE CAUSE MUST BE ASSESSED. IF THE FLAME BACKFIRE WARNING LIGHT IS ON, IT IS IMPERATIVE TO CHECK THE INTEGRITY AND GOOD CONDITION OF THE COMBUSTION HEAD AS DESCRIBED IN THE MAINTENANCE SECTION BEFORE UNLOCKING THE APPLIANCE.

LIMITATIONS OF USE

THE BURNER IS AN APPLIANCE DESIGNED AND CONSTRUCTED TO OPERATE ONLY AFTER BEING CORRECTLY CONNECTED TO A HEAT GENERATOR (E.G. BOILER, HOT AIR GENERATOR, FURNACE, ETC.), ANY OTHER USE IS TO BE CONSIDERED IMPROPER AND THEREFORE DANGEROUS.

THE USER MUST GUARANTEE THE CORRECT FITTING OF THE APPLIANCE, ENTRUSTING THE INSTALLATION OF IT TO QUALIFIED PERSONNEL AND HAVING THE FIRST COMMISSIONING OF IT CARRIED OUT BY A SERVICE CENTRE AUTHORISED BY THE COMPANY MANUFACTURING THE BURNER.

A FUNDAMENTAL FACTOR IN THIS RESPECT IS THE ELECTRICAL CONNECTION TO THE GENERATOR’S CONTROL AND SAFETY UNITS (CONTROL THERMOSTAT, SAFETY, ETC.) WHICH GUARANTEES CORRECT AND SAFE FUNCTIONING OF THE BURNER.

THEREFORE, ANY OPERATION OF THE APPLIANCE MUST BE PREVENTED WHICH DEPARTS FROM THE INSTALLATION OPERATIONS OR WHICH HAPPENS AFTER TOTAL OR PARTIAL TAMPERING WITH THESE (E.G. DISCONNECTION, EVEN PARTIAL, OF THE ELECTRICAL LEADS, OPENING THE GENERATOR DOOR, DISMANTLING OF PART OF THE BURNER).

NEVER OPEN OR DISMANTLE ANY COMPONENT OF THE MACHINE EXCEPT FOR ITS MAINTENANCE.

TO SECURE THE MACHINE, ACT ON THE ISOLATOR SWITCH. IN CASE OF ANOMALIES THAT REQUIRED A SHUT DOWN OF THE BURNER, IT’S POSSIBLE TO ACT ON THE AUXILIARY LINE SWITCH, LOCATED ON THE BURNER FRONT PANEL.

IN CASE OF A BURNER SHUT-DOWN, RESET THE CONTROL BOX BY MEANS OF THE RESET PUSHBUTTON. IF A SECOND SHUT-DOWN TAKES PLACE, CALL THE TECHNICAL SERVICE, WITHOUT TRYING TO RESET FURTHER.

WARNING: DURING NORMAL OPERATION THE PARTS OF THE BURNER NEAREST TO THE GENERATOR (COUPLING FLANGE) CAN BECOME VERY HOT, AVOID TOUCHING THEM SO AS NOT TO GET BURNT.

Double-stage burners

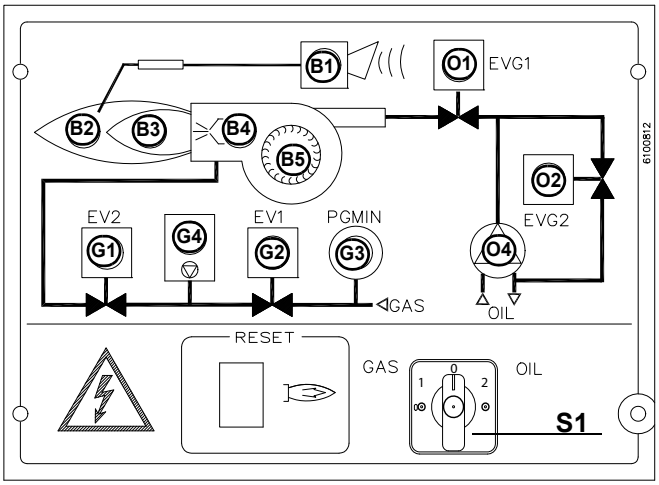

Keys

S1 Main switch (0=Off, 1=GAS, 2=OIL)
B1 Lock-out LED
B2 Hi-flame operation LED
B3 Lo-flame operation LED
B4 “Ignition transformer operation” LED
B5 “Fan motor overload tripped” LED
G1 Gas valves EV2 operation signalling lamp
G2 Gas valves EV1 operation signalling lamp
G3 Gas pressure switch signal lamp
G4 Gas proving system lockout signalling lamp
O1 EVG1 solenoid valve operation LED
O2 EVG2 solenoid valve operation LED
O4 Oil pump in operation LED

Fully modulating / Progressive Burners

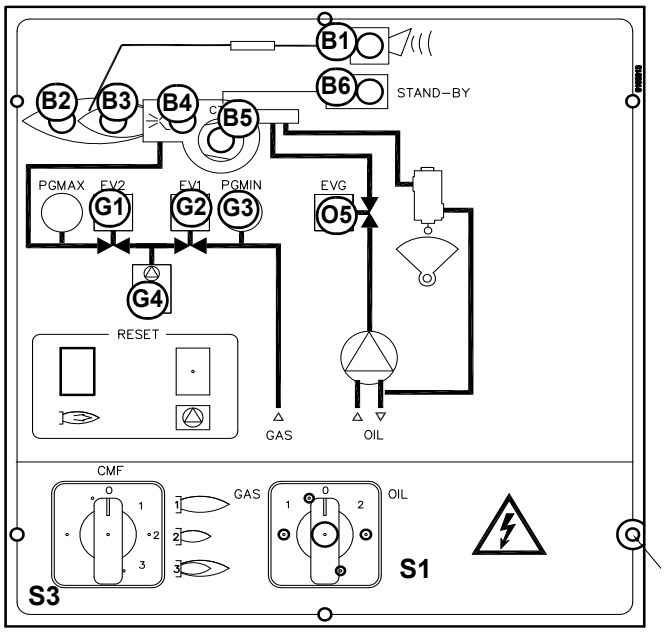

Keys

S1 Main switch (0=Off, 1=GAS, 2=OIL)
S2 Reset pushbutton for control box
S3 CMF switch (0=stop, 1=low flame, 2=high flame, 3=automatic) - fully modulating burners only
D Gas proving system reset pushbutton (only for burners with Siemens LDU11 provided)
B1 Lock-out LED
B2 Hi-flame operation LED
B3 Lo-flame operation LED
B4 “Ignition transformer operation” LED
B5 “Fan motor overload tripped” LED
B6 Stand-by signalling lamp
G1 Gas valves EV2 operation signalling lamp
G2 Gas valves EV1 operation signalling lamp
G3 Gas pressure switch signal lamp
G4 Gas proving system lockout signalling lamp
O5 Oil valve EVG operation signalling lamp
A1 Burner Modulator (only on fully modulating burners)

Fuel selection:

- In order to start the burner with gas or light oil, the operator must commute the selector on the burner control panel on (1) = gas, or (2) = light oil.
  If the selector is set on (1) the gas cock must be open, while the light oil cock must be closed. Viceversa if the selector is set on (2).
  CAUTION: if the fuel chosen is oil, be sure the cutoff valves on the feed and return pipes are open.

Check the control box is not locked (signalling light **B1**, on); if so, reset it by means of the reset button.

- Check the series of thermostats and pressure switches turn the burner to on.

Gas operation

- Check the gas feeding pressure is sufficient (signalling lamp **G3** on).
- **Burners fitted with gas proving system:** the gas proving system test begins; when the test is performed the proving system LED turns on. At the end of the test, the burner staring cycle begins: in case of leakage in a valve, the gas proving system stops the burner and the lamp **B1** turns on.
-

NOTE: if the burner is fitted with Dungs VPS504, the pre-purgue phase starts once the gas proving system is successfully performed. Since the pre-purgue phase must be carried out with the maximum air rate, the control box drives the actuator opening and when the maximum opening position is achieved, the pre-purge time counting starts.

- At the end of the pre-purge time, the actuator drives the complete closing (ignition with gas position) and, as this is achieved the ignition transformer is energised (LED **B4** is on); the gas valves open.
- Few seconds after the valves opening, the transformer is de-energised and lamp **B4** turns off.

- The burner is now operating, meanwhile the actuator goes to the high flame position and, after some seconds, the two-stage operation begins; the burner is driven automatically to high flame or low flame, according to the plant requirements.

Operation in high or low flame is signalled by lamp **B2** on the frontal panel.

Light oil operation

- The fan motor starts and the pre-purge phase as well. Since the pre-purge phase must be carried out at the maximum air rate, the control box drives the actuator opening and when the maximum opening position is reached, the pre-purge time counting starts.
- At the end of the pre-purge time, the actuator is in the light oil ignition position: the ignition transformer is energised (lamp **B4** on); the ignitor gas valves (if provided) and the light oil valves open. Few seconds after the valves opening, the transformer is de-energised and lamp **B4** turns off.
- The burner is now operating, meanwhile the actuator goes to the high flame position; after some seconds, the two-stage operation begins; the burner is driven automatically to high flame or low flame, according to the plant requirements.Operation in high or low flame is signalled by LED **B2** on the burner control panel.

The fuel is pushed into the pump to the nozzle at the delivery pressure set by the pressure governor. The solenoid valve stops the fuel immission into the combustion chamber. The fuel flow rate that is not burnt goes back to the tank through the return circuit. The nozzle is feeded at constant pressure, while the return line pressure is adjusted by means of the pressure governor controlled by an actuator..

AIR FLOW AND FUEL ADJUSTMENT

WARNING! During commissioning operations, do not let the burner operate with insufficient air flow (danger of formation of carbon monoxide); if this should happen, make the fuel decrease slowly until the normal combustion values are achieved.
WARNING! the combustion air excess must be adjusted according to the values in the following chart.

Recommended combustion parameters		
Fuel	Recommended (%) CO_2	Recommended (%) O_2
Natural gas	9 ÷ 10	3 ÷ 4.8
LPG	11 ÷ 12	2.8 ÷ 4.3
Light oil	11.5 ÷ 13	2.9 ÷ 4.9

ADJUSTMENT PROCEDURE FOR LIGHT OIL OPERATION

The oil flow rate can be adjusted choosing a nozzle that suits the boiler/utilisation output and setting the delivery and return pressure values according to the ones quoted on the following charts.

FLUIDICS KW3...45°

NOZZLE SUPPLY PRESSURE = 20 bar. VISCOSITY AT NOZZLE = 5 cSt

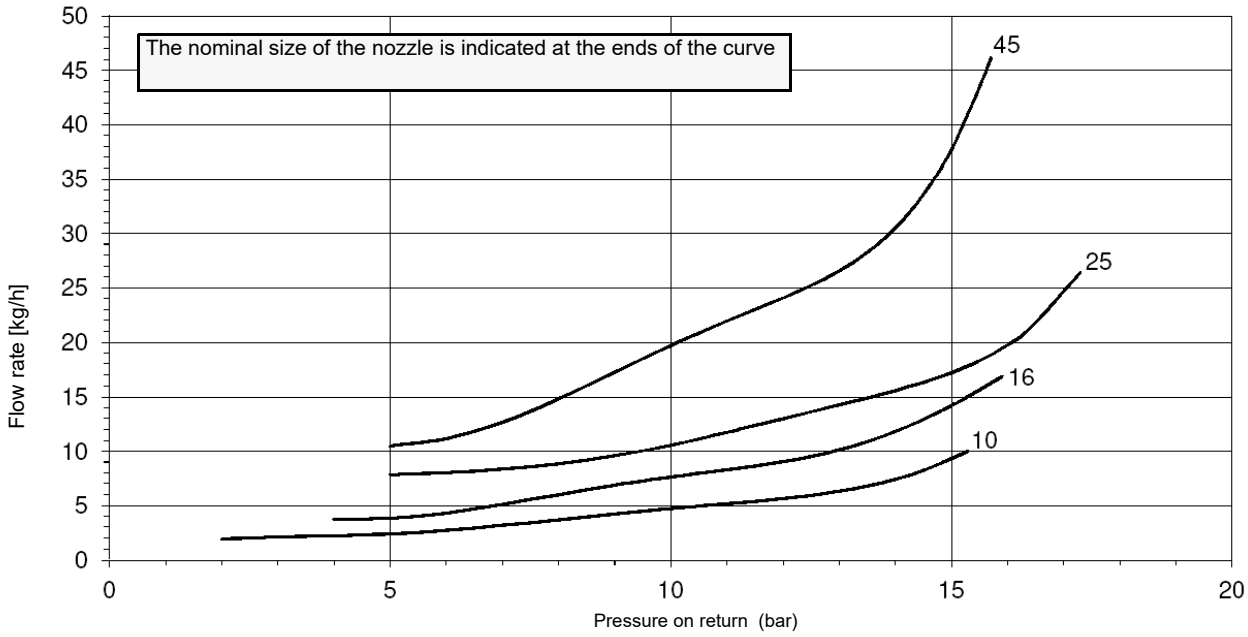

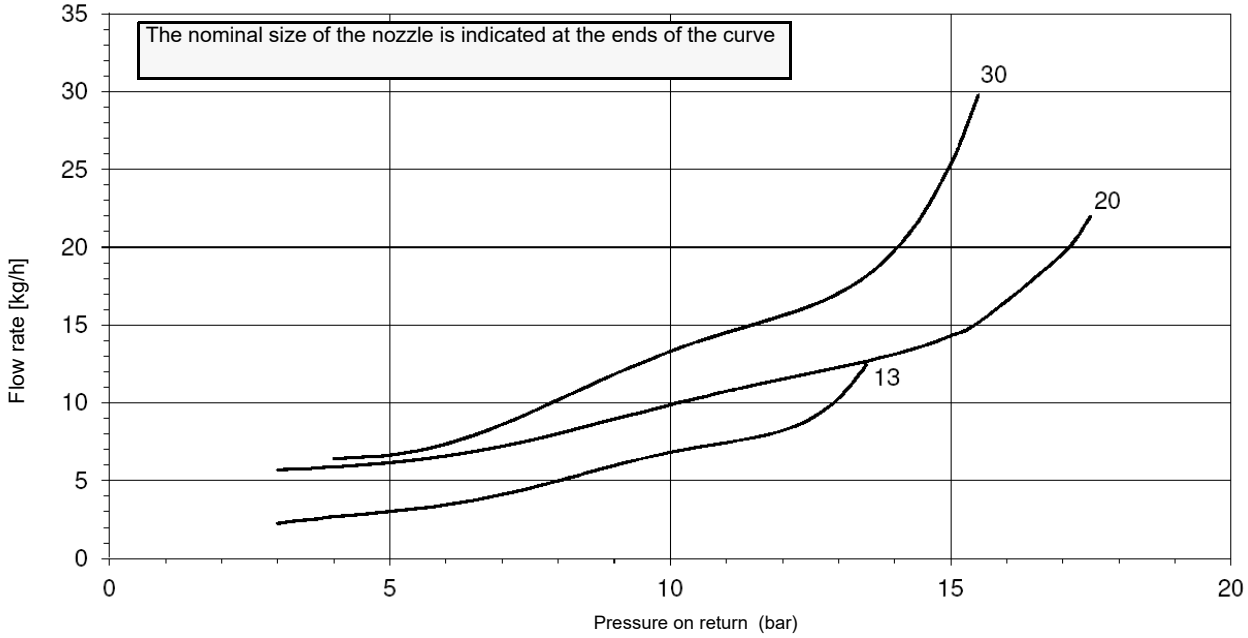

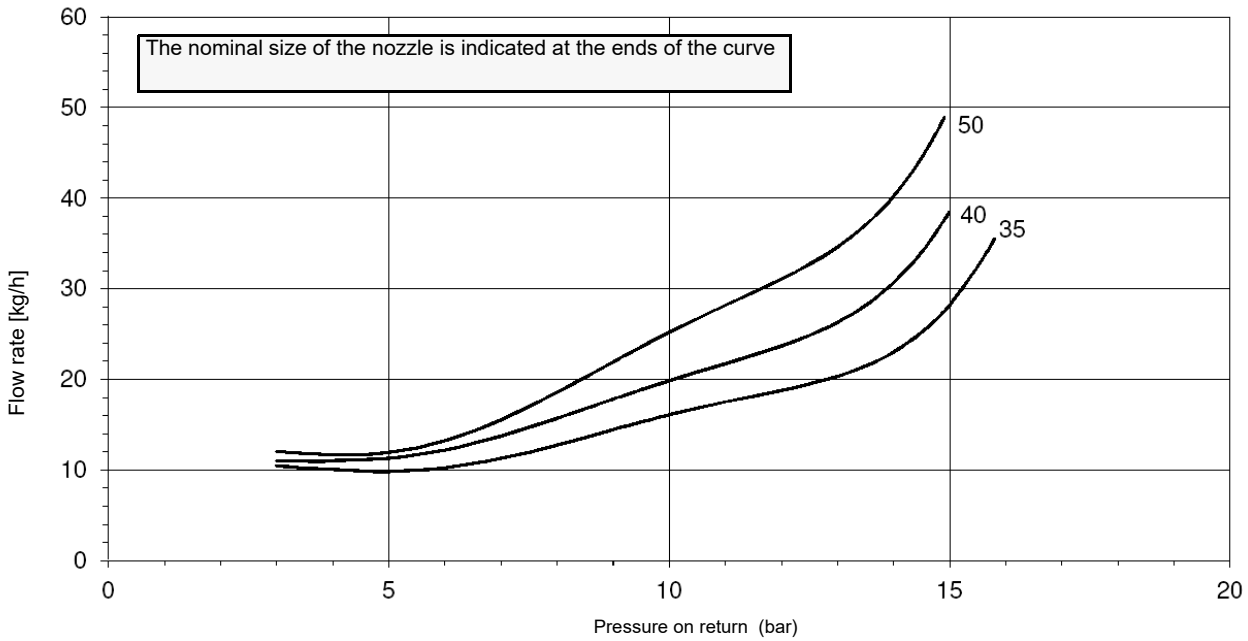

FLUIDICS KW3...45°

NOZZLE SUPPLY PRESSURE = 20 bar. VISCOSITY AT NOZZLE = 5 cSt

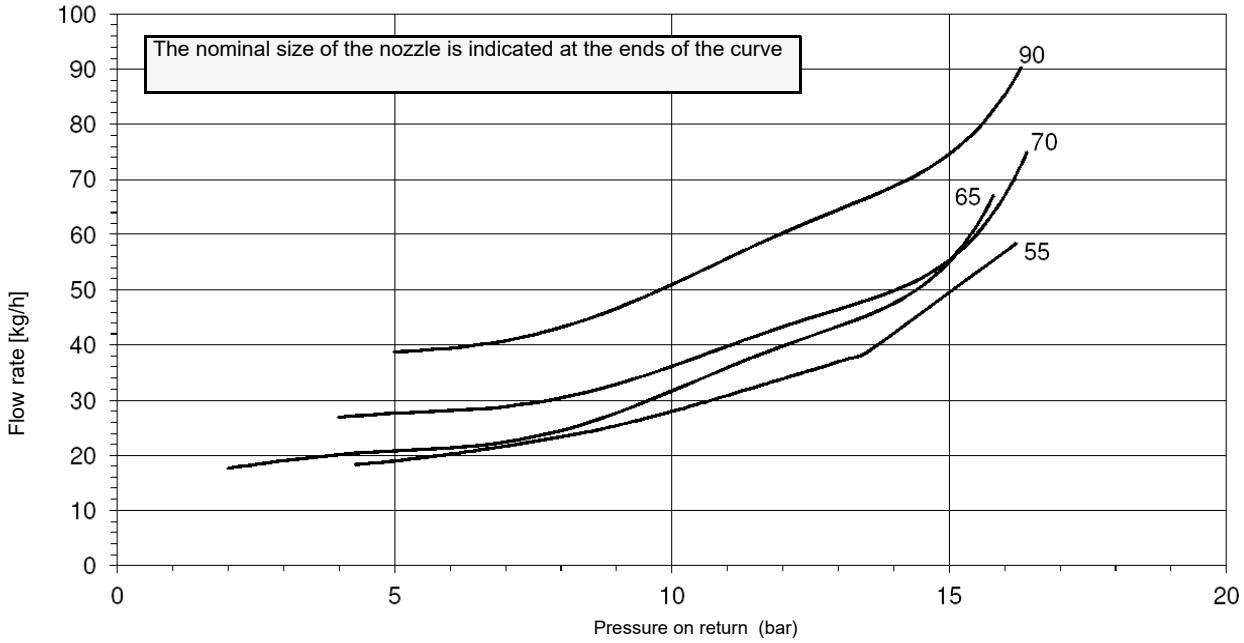

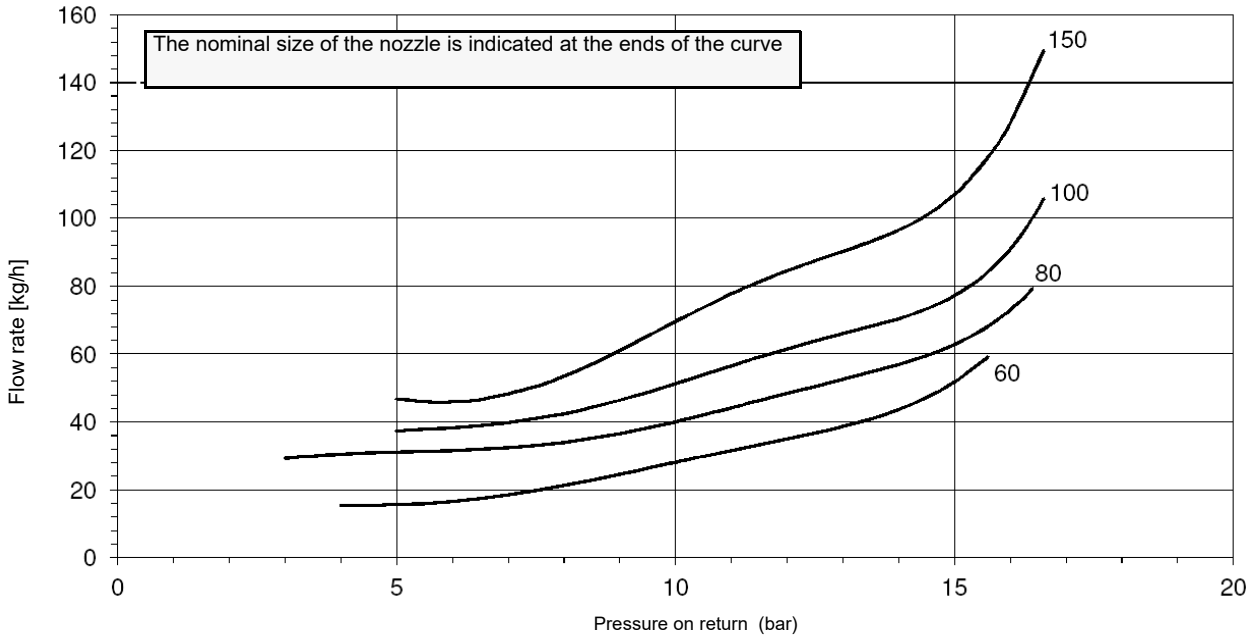

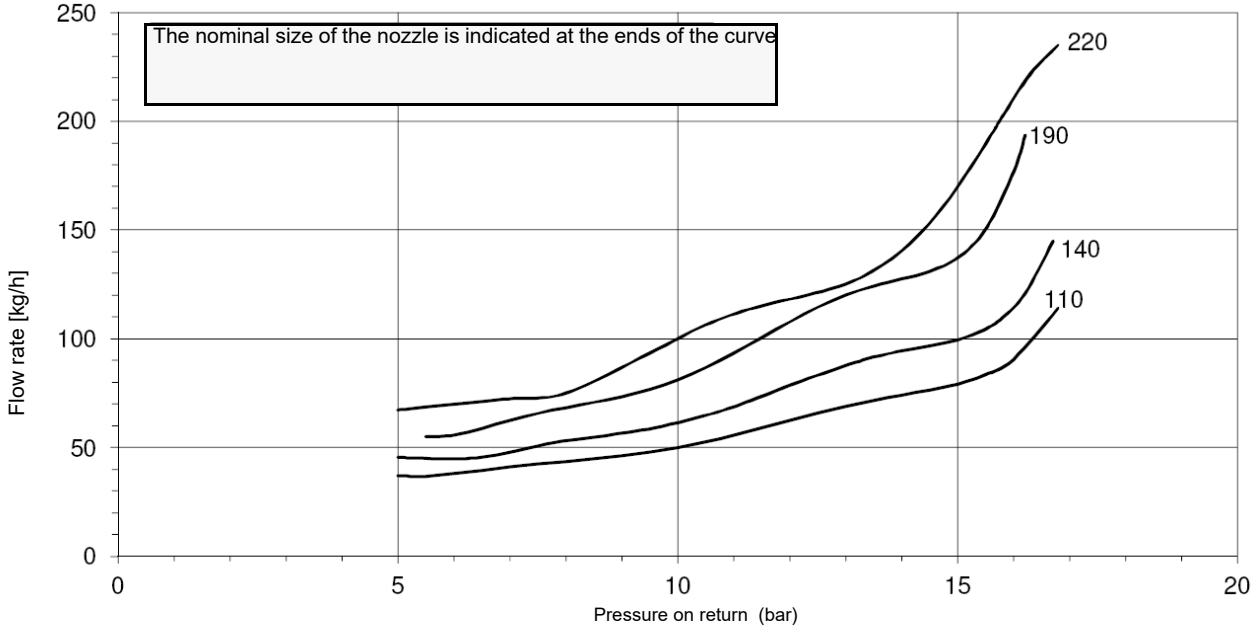

FLUIDICS KW3...45°

NOZZLE SUPPLY PRESSURE = 20 bar. VISCOSITY AT NOZZLE = 5 cSt

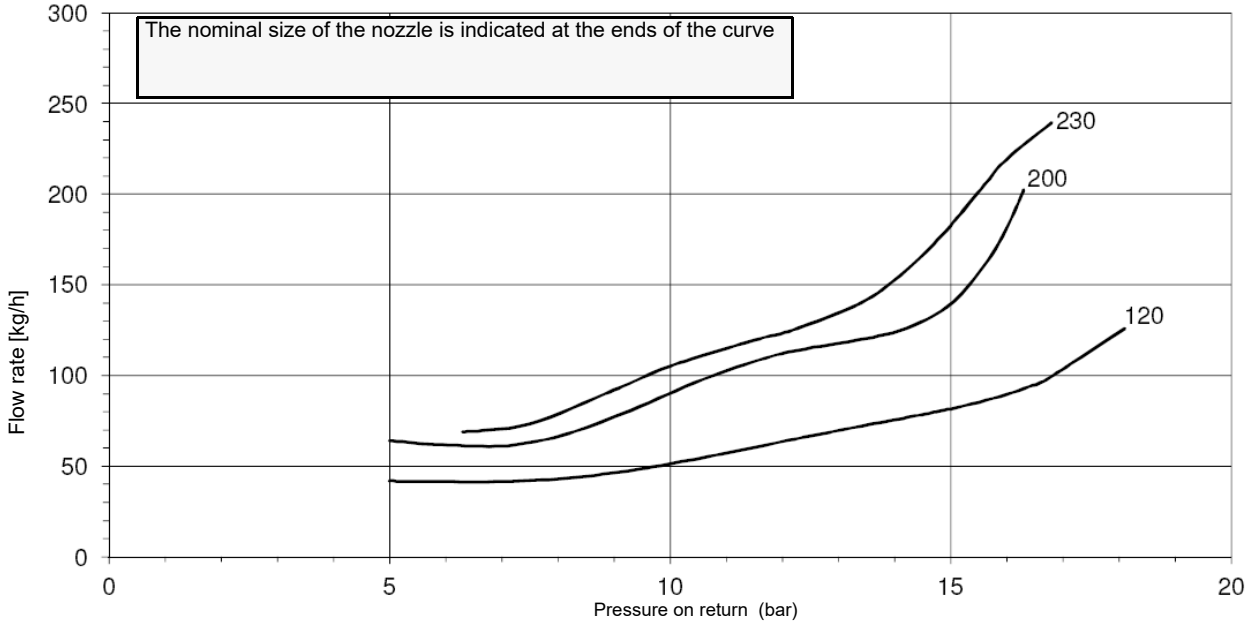

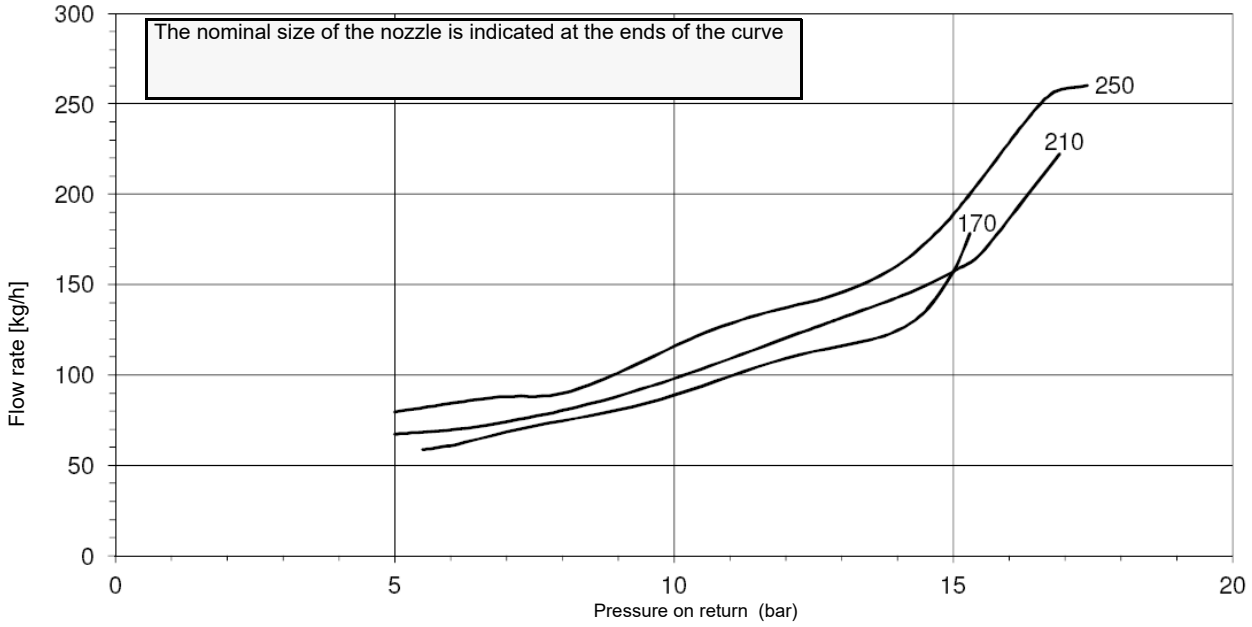

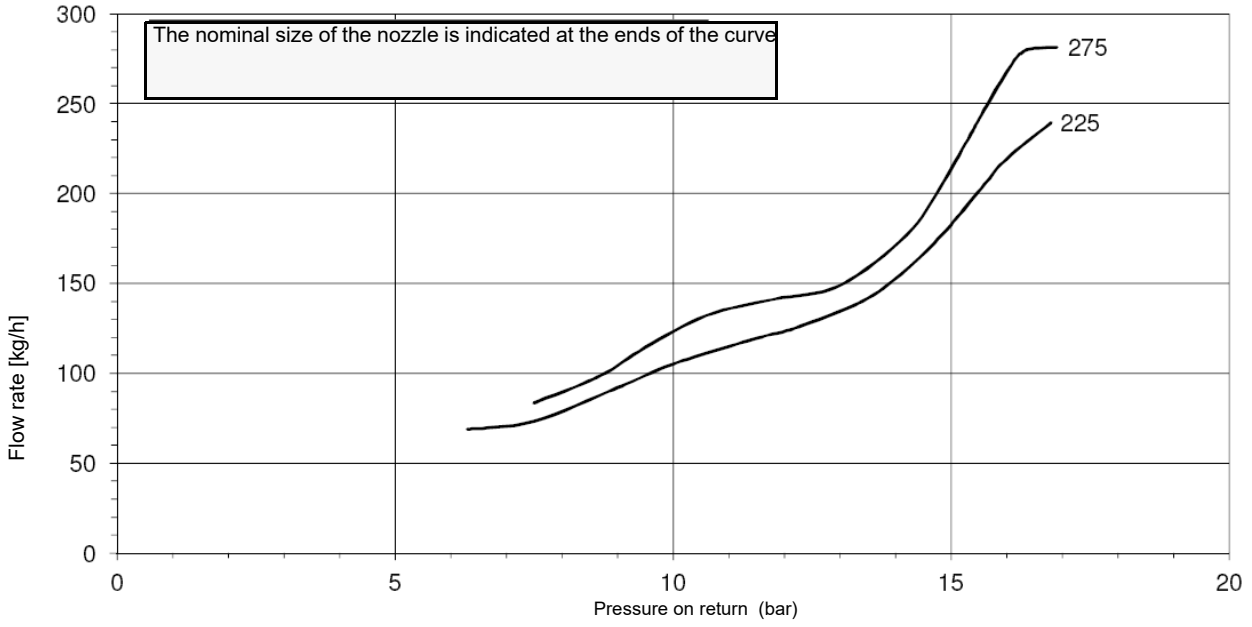

FLUIDICS KW3...60°

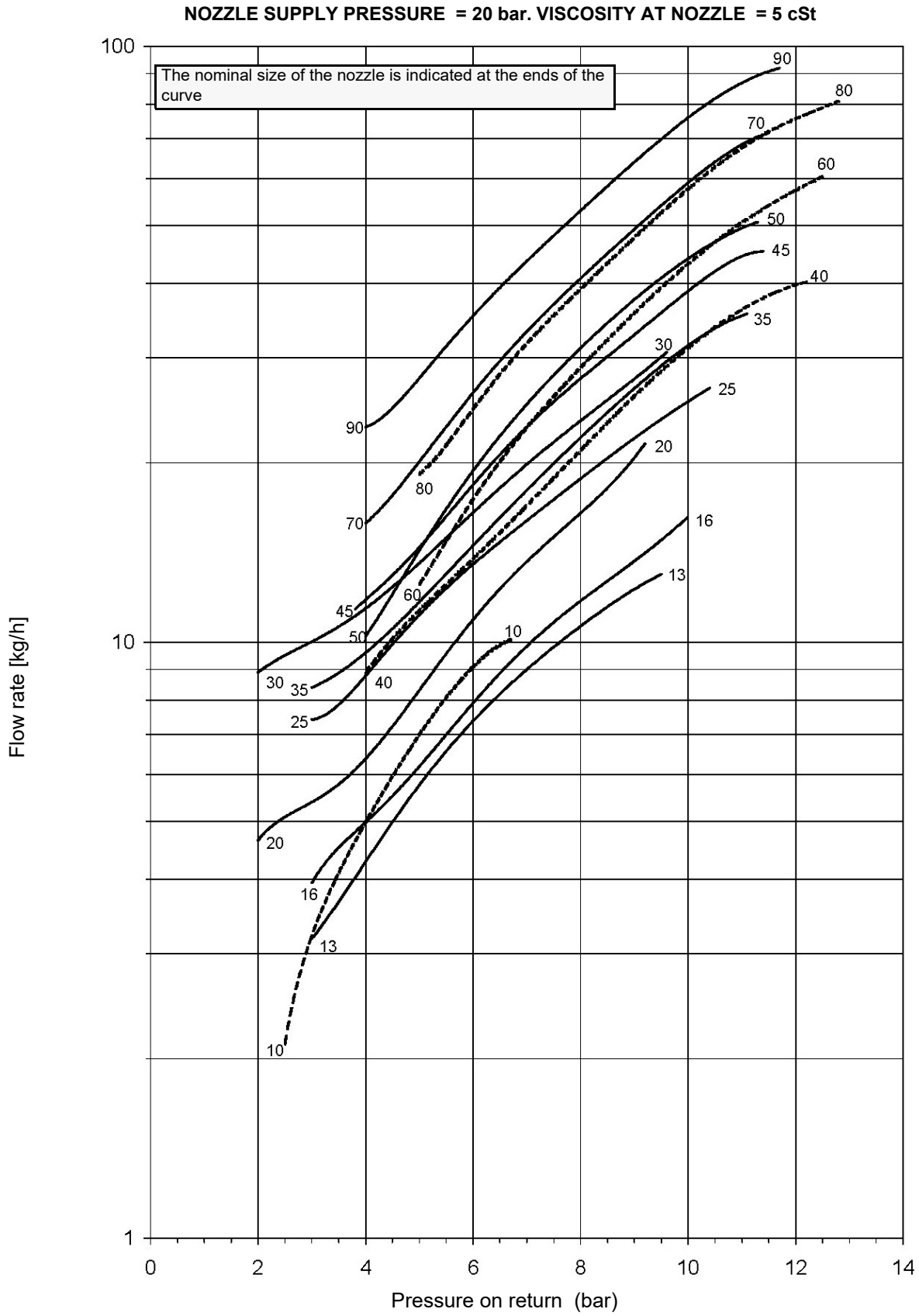

FLUIDICS KW3...60°

NOZZLE SUPPLY PRESSURE = 20 bar. VISCOSITY AT NOZZLE = 5 cS

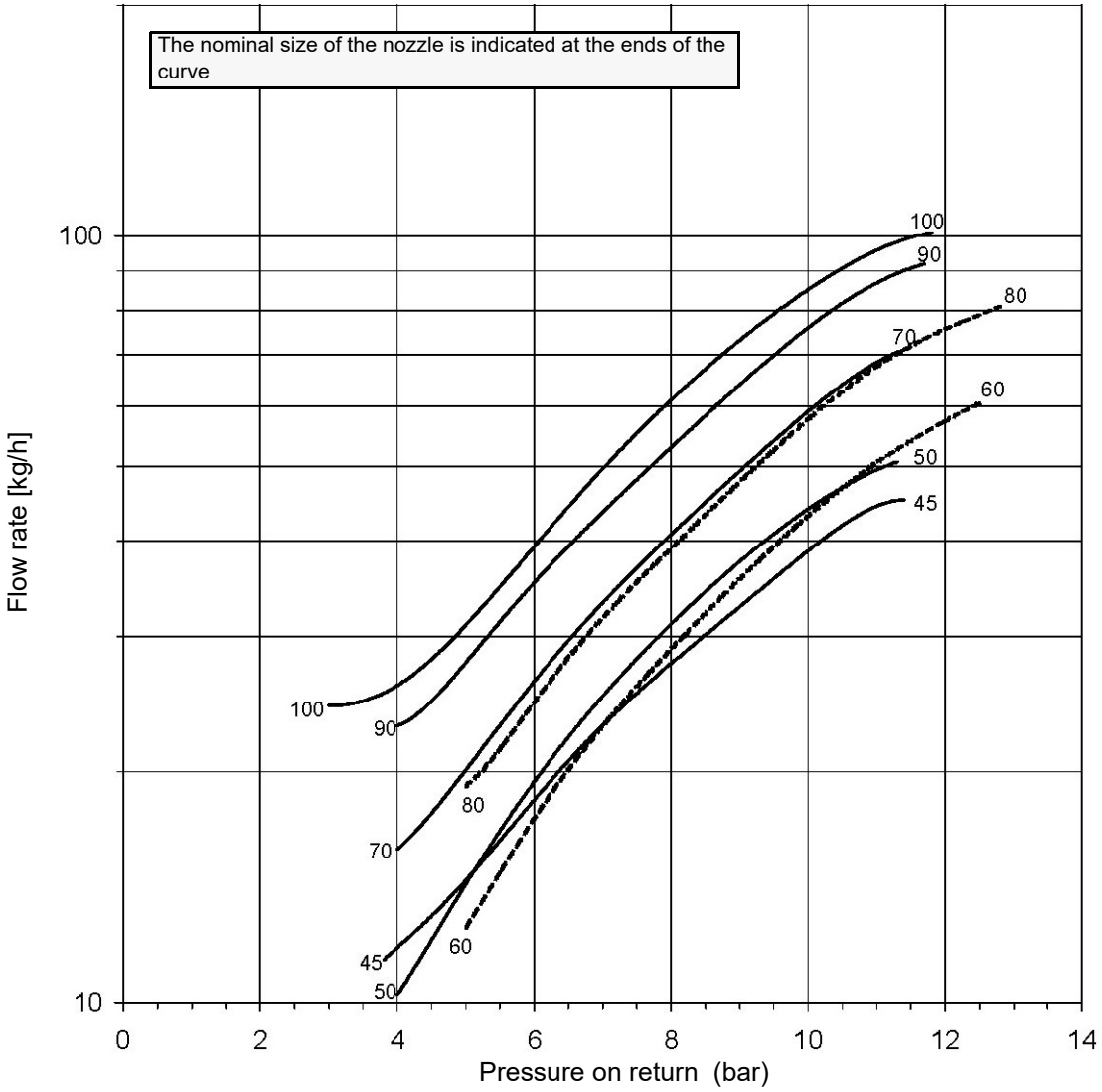

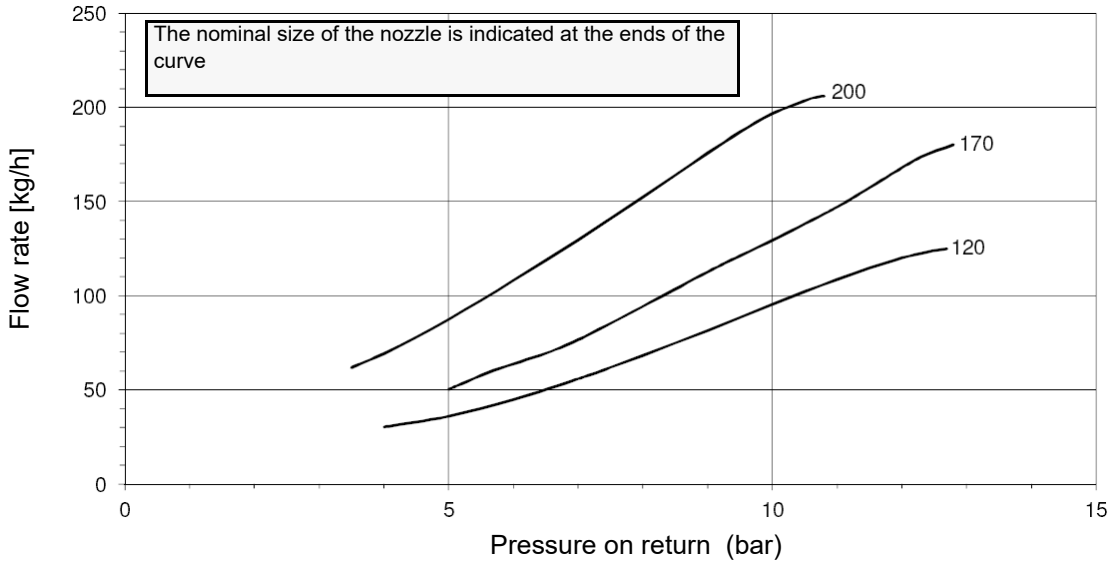

FLUIDICS KW3...60°

NOZZLE SUPPLY PRESSURE = 20 bar. VISCOSITY AT NOZZLE = 5 cSt

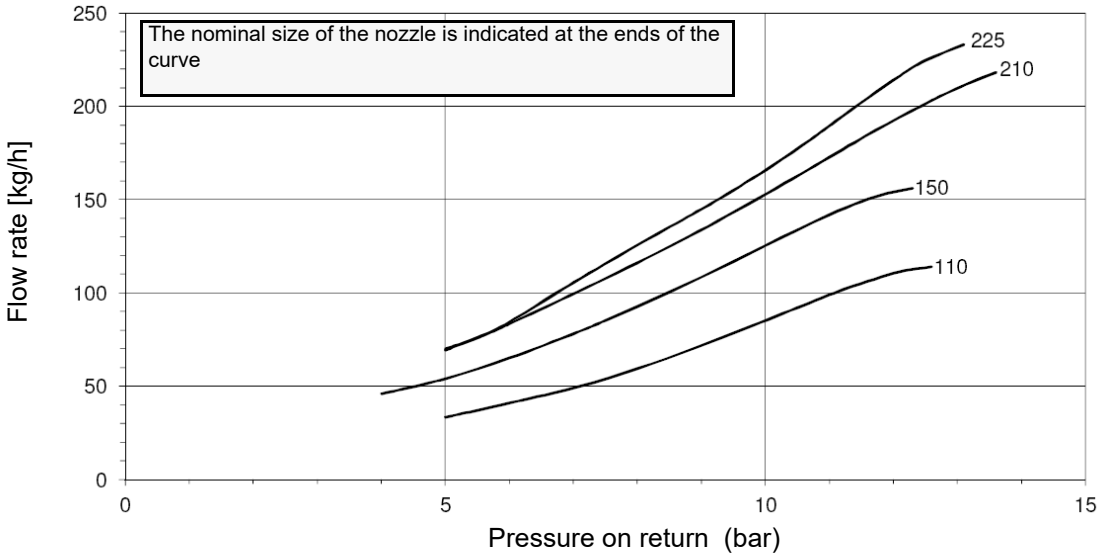

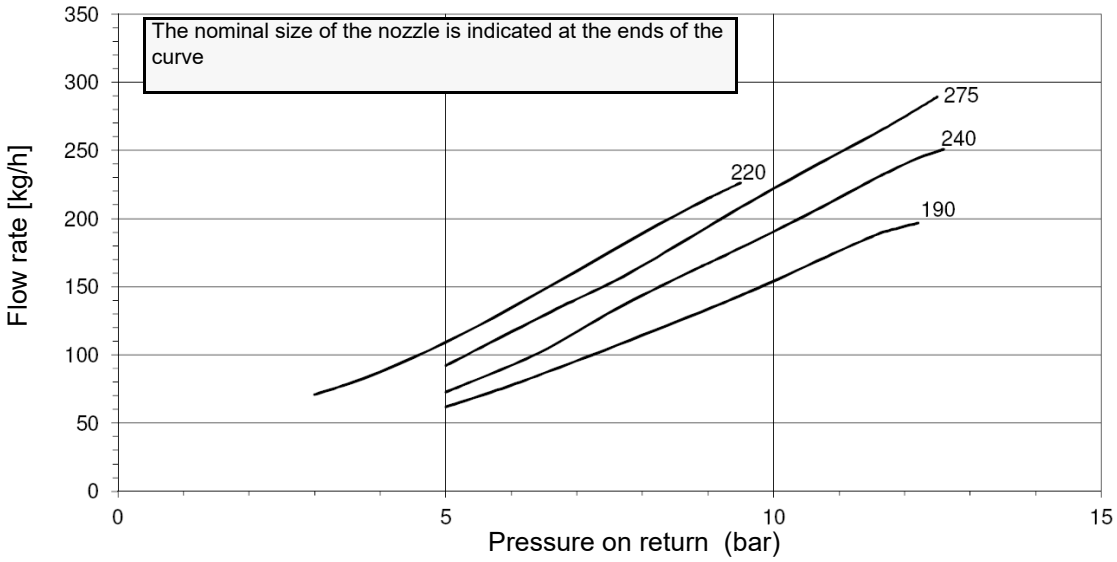

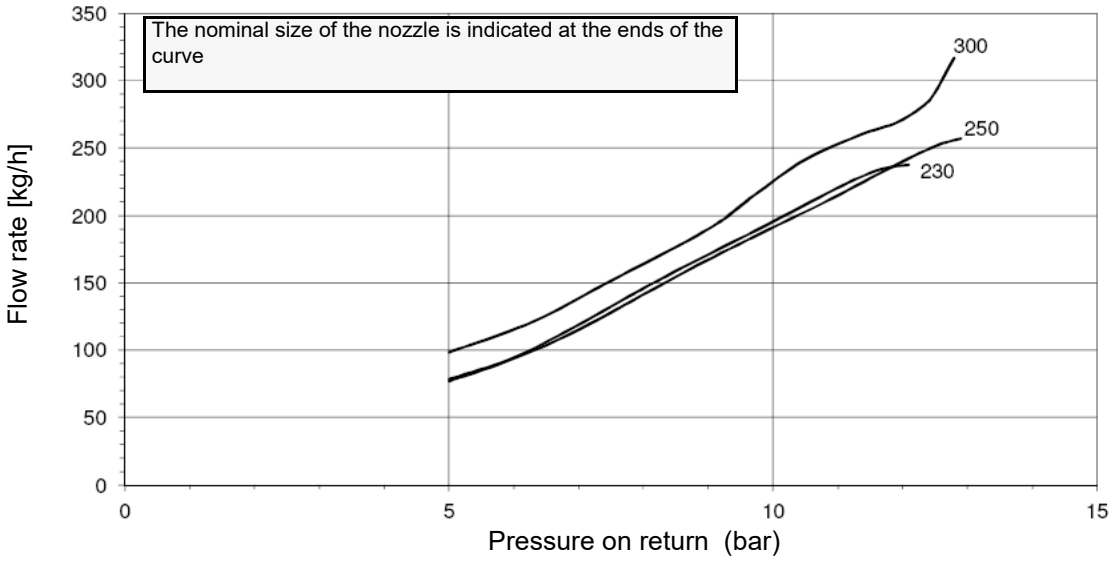

Progressive burners

Air and Gas Flow Rate Settings by means of Berger STM30../Siemens SQM40.. actuator

1 check the fan motor rotation.

2 Only for burners provided with **Multibloc MB-DLE gas valves:** before starting the burner up, set the slow opening. To set the slow opening, remove cover **T**, reverse it upside down and use it as a tool to rotate screw **VR**. Clockwise rotation reduces start flow rate, anticlockwise rotation increases it. Do not use a screwdriver on the screw **VR**!

Note: the screw **VSB** must be removed only in case of replacemente of the coil.

3 Before starting the burner up, drive the high flame actuator microswitch matching the low flame one (in order to let the burner operates at the lowest output) to safely achieve the high flame stage.

4 Start the burner up by means of the thermostat series and wait until the pre-purge time comes to an end and that the burner starts up;

5 drive the burner to high flame stage, by means fo the thermostat **TAB**.

6 Then move progressively the microswitch to higher values until it reaches the high flame position; always check the combustion values and eventually adjusting the gas by means of the valves group stabiliser.

7 go on adjusting air and gas flow rates: check, continuosly, the flue gas analisys, as to avoid combustion with little air; dose the air according to the gas flow rate change following the steps quoted below;

SQM40.265 Actuator cams

(RD) I High flame
(BU) II Stand-by
(OG) III Low flame - gas
(YE) IV Low flame - oil
(BK) V Ignition - oil
(GN) VI Ignition - gas

8 Drive the burner to high flame stage (please refer to the LMVx documentation attached to this manual).

9 To adjust the **air flow rate in the high flame stage**, loose the **RA** nut and screw **VRA** as to get the desired air flow rate: moving the rod **TR** towards the air damper shaft, the air damper opens and consequently the air flow rate increases, moving it far from the shaft the air damper closes and the air flow rate decreases.

Note: once the procedure is perfomed, be sure that the blocking nut **RA** is fasten. Do not change the position of the air damper rods.

10 If necessary, adjust the combustion head position (see the dedicated paragraph).

11 The air and gas rate are now adjusted at the maximum power stage, go on with the point to point adjustement on the **SV1** (FGR side) adjusting cam as to reach the minimum output point.

12 Procedere, ora, alla regolazione dei pressostati.Now adjust the pressure switches.

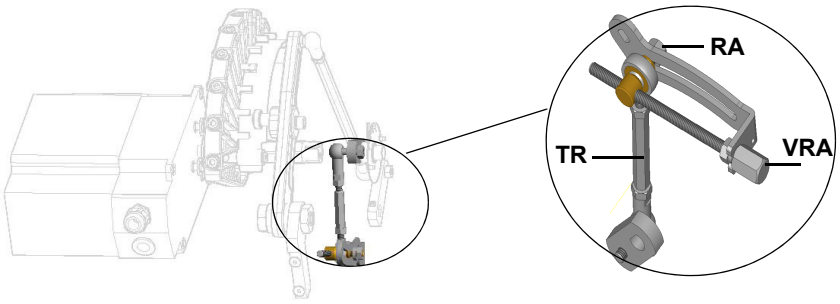

13 If necessary, adjust the combustion head position (see the dedicated paragraph)..

Attention! if it is necessary to change the head position, repeat the air and gas adjustments described above.

14 The air and gas rate are now adjusted at the maximum power stage, go on with the point to point adjustement on the **SV1** (gas side) adjusting cam as to reach the minimum output point.

15 as for the point-to-point regulation, move the gas low flame microswitch a little lower than the maximum position (90°);

16 set the **TAB** thermostat to the minimum in order that the actuator moves progressively towards the low flame position;

17 move the gas low flame microswitch to the minimum to move the actuator towards the low flame until the two bearings find the adjusting screw that refers to the lower position: screw **V1** to increase the rate, unscrew to decrease.

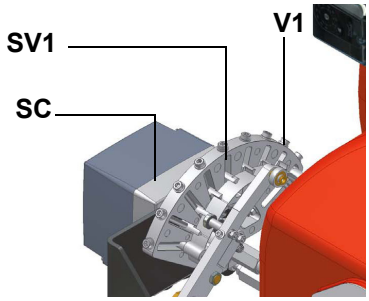

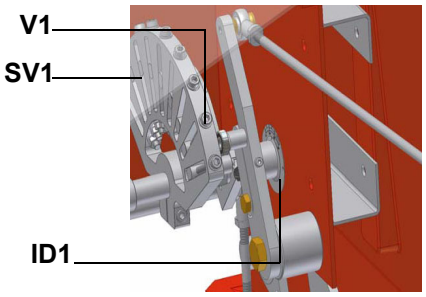

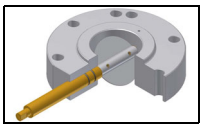
Gas throttle valve open

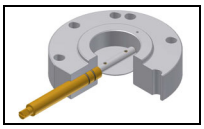
Gas throttle valve closed

18 Move again the gas low flame microswitch towards the minimum to meet the next screw on the adjusting cam and repeat the previous step; go on this way as to reach the desired low flame point.

19 Now adjust the pressure switches.

Maximum oil pressure switch

The oil pressure switch on the return line, checks that the pressure does not exceed a default value. This value must not be higher than the maximum acceptable pressure on the return line (this value is reported on the specification table). A pressure change on the return line could affect the combustion parameters: for this reason, the pressure switch must be set, say, at 20% over the pressure recorded during the combustion adjustment. The factory setting is 4 bar.

It is recommended to verify that the combustion parameters are within the range of acceptable values even against a pressure variation that gets close to the limit of the pressure switch.

This check should be carried out along the whole range of the burner output.

In case of inacceptable values, reduce from 20% to 15% the overpressure; later on, repeat the adjustments described above.

Minimum oil pressure switch (when provided)

The minimum oil pressure switch on the inlet line, checks that the pressure does not drop below a default value. The pressure switch must be set, say, at 10% under the pressure at the nozzle.

Oil pressure switch adjustment

Follow the below instruction, according to the pressure switch installed.

Trafag Picostat 9B4..

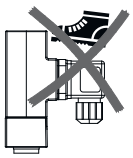

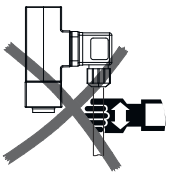

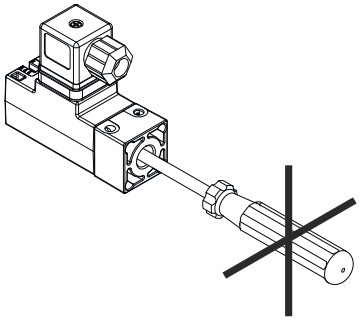

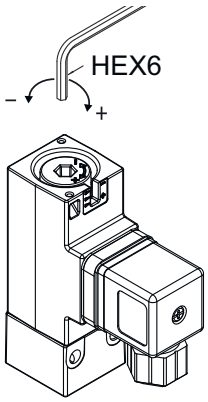

ADJUSTMENTS FOR GAS OPERATION

Adjustments - brief description

- Check that the combustion parameters are in the suggested limits.
- .Check the flow rate measuring it on the counter or, if it was not possible, verifying the combustion head pressure by means of a differential pressure gauge.
- Adjust the combustion values in the high-flame stage.
- Set, now, the low flame output, acting on the low flame microswitch of the actuator in order to avoid the low flame output increasing too much or that the flues temperature gets too low to cause condensation in the chimney.

Double-stage burners

1 set GAS fuel by means of the burner **S1** switch (it is placed on the burner control panel)

2 check the fan motor rotation.

Only for burners provided with **Dungs Multibloc MB-DLE gas valves**:before starting the burner up, adjust the valves slow opening. To set the fast opening remove cover **T**, reverse it upside down and use it as a tool to rotate screw **VR**. Clockwise rotation reduces start flow rate, anticlockwise rotation increases it. Do not use a screwdriver on the screw **VR**! The pressure stabilizer is adjusted by operating the screw **VS** located under the cover **C**. By screwing down the pressure is increased and by unscrewing it is reduced.

Note: the screw **VSB** must be removed only in case of replacemente of the coil.

Only for burners provided with **Dungs Multibloc MB-DLE gas valves**:before starting the burner up, adjust the valves slow opening. To set the fast opening remove cover **T**, reverse it upside down and use it as a tool to rotate screw **VR**. Clockwise rotation reduces start flow rate, anticlockwise rotation increases it. Do not use a screwdriver on the screw **VR**! The pressure stabilizer is adjusted by operating the screw **VS** located under the cover **C**. By screwing down the pressure is increased and by unscrewing it is reduced.

Note: the screw **VSB** must be removed only in case of replacemente of the coil.

3 Start the burner up by means of the thermostat series and wait until the pre-purge time comes to an end and that the burner starts up;

4 drive the burner to high flame stage, by means fo the thermostat **TAB**.

5 do not change the air flow rate adjustment set in the light oil operation (see previous paragraph);

6 acting on the pressure stabiliser of the valves group, adjust the **gas flow rate in the high flame stage** as to meet the values requested by the boiler/utilisation:

-**Multibloc MB-DLE:**The pressure governor is adjusted by operating the screw **VS** located under the cover **C**. By screwing down the pressure is increased and by unscrewing it is reduced. The valve is adjusted by means of the **RP** regulator after slackening the locking screw **VB** by a number of turns. By unscrewing the regulator **RP** the valve opens, screwing the valve closes.

- Siemens VGD valves group: remove cap **T** and act on the **VR** adjusting screw to increase or decrease the pressure and consequently the gas rate; screwind **VR** the rate increases, unscrewing it decreases (see next figure).

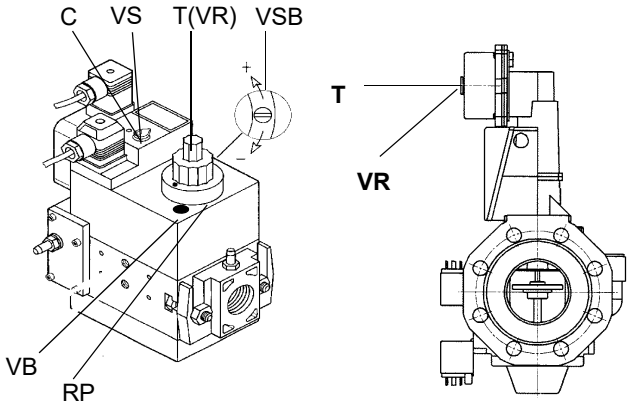

Dungs Multibloc MB-DLE **Siemens VGD..**

7 If necessary, adjust the combustion head position (see the dedicated paragraph)..

Attention! if it is necessary to change the head position, repeat the air and gas adjustments described above.

8 drive the burner to the low flame stage by means of the **TAB** thermostat;

In order to change the gas flow rate slacken the nuts **DB** (Fig. 5) and adjust the opening angle of the gas butterfly valve by rotating the rod **TG** (clockwise rotation increases gas flow, anticlockwise rotation decreases it). The mark on the butterfly valve shaft shows the measured opening degree of the valve regardingthe horizontal axis (Fig. 5).**NOTE:** At the end of settings, make sure the locking screws **RA** and **DB** are fully tightened.

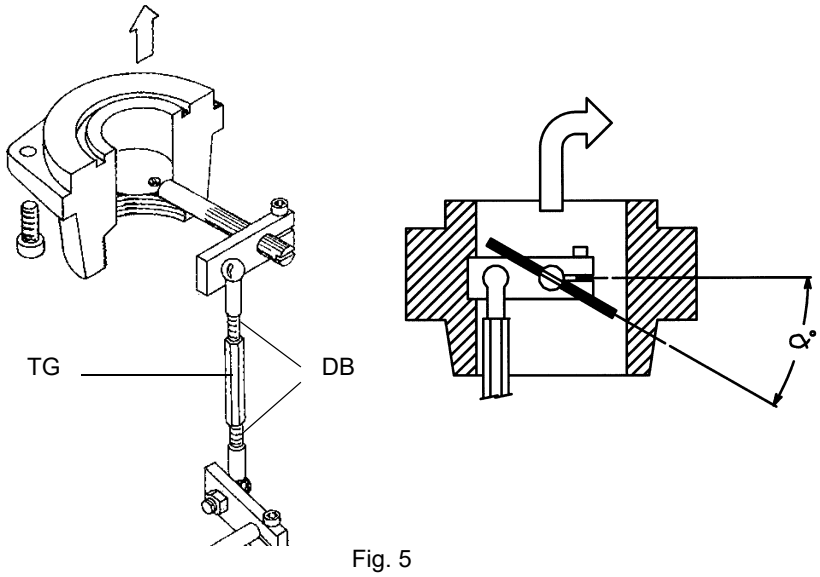

Fig. 5

9 Now adjust the pressure switches .

10 In the case that the flue gas temperature is not the one required, go back to the light oil operation and adjust the oil flow rate as to meet the flue gas temperature values reqested. Consequently adjust the air always observing the combustion analysis. Then go back to the gas operation and repeat only the gas adjustments (because the air rate has already been set in the light oil operation); always check the combustion values.

11 Turn the burner off and then start it up again. If the adjustment is not correct, repeat the previous steps.

12acting on the pressure stabiliser of the valves group, adjust the **gas flow rate in the high flame stage** as to meet the values requested by the boiler/utilisation:

-**Multibloc MB-DLE:**The pressure governor is adjusted by operating the screw **VS** located under the cover **C**. By screwing down the pressure is increased and by unscrewing it is reduced. The valve is adjusted by means of the **RP** regulator after slackening the locking screw **VB** by a number of turns. By unscrewing the regulator **RP** the valve opens, screwing the valve closes.

- Siemens VGD valves group: remove cap **T** and act on the **VR** adjusting screw to increase or decrease the pressure and consequently the gas rate; screwind **VR** the rate increases, unscrewing it decreases (see next figure).

- MultiBloc MBE To set the outlet pressure of the VD-R regulator, act on the adjustment ring nut

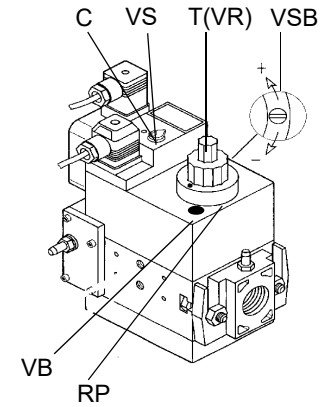

Dungs Multibloc MB-DLE

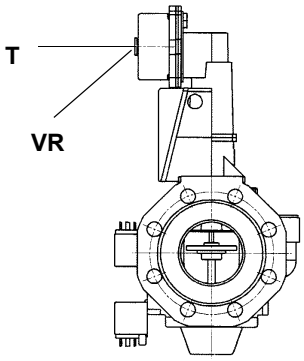

Siemens VGD..

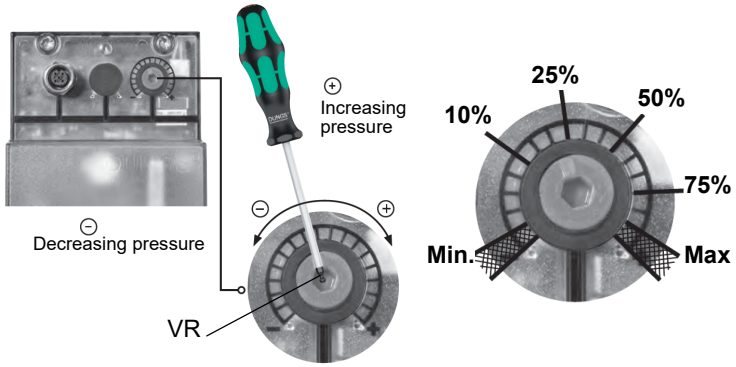

Gas Proving System VPS504

The VPS504 check the operation of the seal of the gas shut off valves. This check, carried out as soon as the boiler thermostat gives a start signal to the burner, creates, by means of the diaphragm pump inside it, a pressure in the test space of 20 mbar higher than the supply pressure. To install the DUNGS VPS504 gas proving system on the MD-DLE valves group, proceed as follows:

1 turn off gas supply.;
2 Switch off power supply.
3 remove the Multibloc screw plugs (Fig. 6-A);
4 iInsert sealing rings (10,5 x 2,25) into VPS 504 (Fig. 6-B - Fig. 7)
5 Torque screws 3, 4, 5, 6 (M4 x16) Fig. 7-C

Only use screws with metric thread on reassembly (modification, repair).

6 On completion of work, perform a leak and functional test.

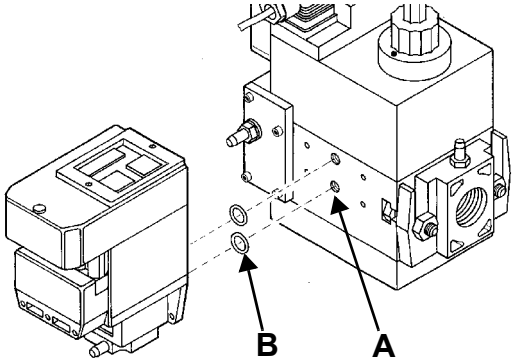

Fig. 6

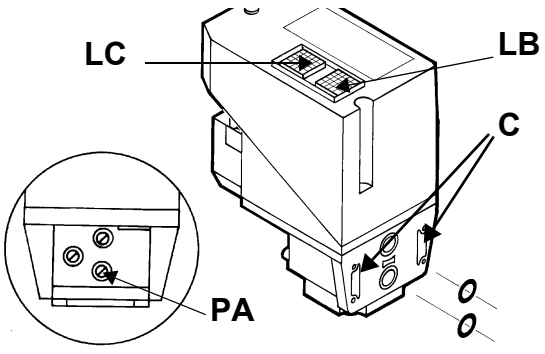

Fig. 7

When wishing to monitor the test, install a pressure gauge ranged to that of the pressure supply point **PA** (Fig. 7). If the test cycle is satisfactory, after a few seconds the consent light **LC** (yellow) comes on. In the opposite case the lockout light **LB** (red) comes on. To restart it is necessary to reset the appliance by pressing the illuminated pushbutton **LB**.

Progressive burners

1 Once the air and gas flow rates are adjusted, turn the burner off, switch to the oil operation (OIL, on the burner control panel).

2 with the electrical panel open, prime the oil pump acting directly on the related **CP** contactor (see next picture): check the pump motor rotation and keep pressing for some seconds until the oil circuit is charged;

3 bleed the air from the **M** pressure gauge port by loosing the cap without removing it, then release the contactor.

Suntec E7	Suntec TA.	Suntec AJ6
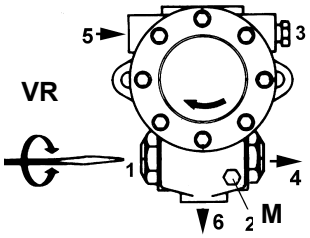	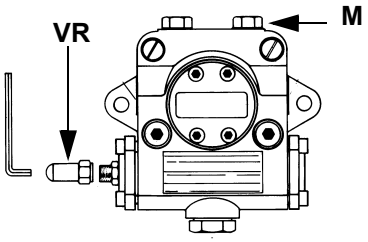	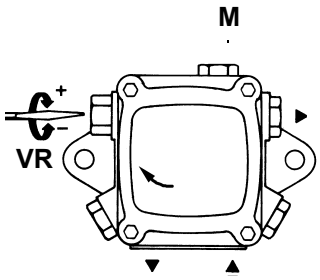

4 Before starting the burner up, drive the high flame actuator microswitch matching the low flame one (in order to let the burner operates at the lowest output) to safely achieve the high flame stage .

5 Start the burner up by means of the thermostat series and wait until the pre-purge time comes to an end and that the bruner starts up;

6 drive the burner to high flame stage, by means fo the thermostat **TAB** (as far as fully-modulating burners, see the related paragraph).

7 Then move progressively the microswitch to higher values until it reaches the high flame position; always check the combustion values and eventually adjusting the oil pressure (see next step).

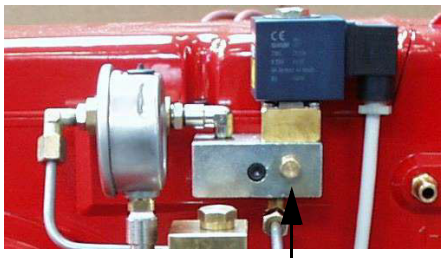

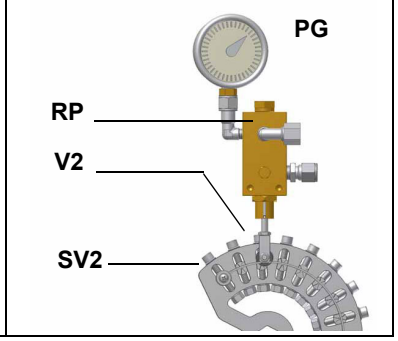

8 Only if necessary, adjust the supply pressure as follows;insert a pressure gauge into the port shown on figure and act on on the pump adjusting screw **VR**. Pressure values are indicated at the beginning of this paragraph.

9 in order to get the maximum oil flow rate, adjust the pressure (reading its value on the **PG** pressure gauge) without changing the air flow rate set during the gas operation adjustments (see previous paragraph): checking always the combustion parameters, the adjustment is to be performed by means of the **SV2** adjusting cam screw (see picture) when the cam has reached the high flame position.

10 once the oil rate is adjusted at the maximum output (the air rate was adjusted in the gas regulation), go on with the point to point adjustment on the **SV2** (light oil side) adjusting cam as to reach the minimum output point, as described on the next steps.

11 as for the point-to-point regulation, move the gas low flame microswitch a little lower than the maximum position (90°);

12 set the **TAB** thermostat to the minimum in order that the actuator moves progressively towards the low flame position (as far as fully-modulating burners, see the related paragraph);

13 move the low flame cam to the minimum to move the actuator towards the low flame until the two bearings find the adjusting screw that refers to the lower position: screw **V2** to increase the rate, unscrew to decrease.

14 Move again cam III towards the minimum to meet the next screw on the adjusting cam and repeat the previous step; go on this way as to reach the desired low flame point.

15 The low flame position must never match the ignition position that is why the cam must be set 20°- 30° more than the ignition position.

Turn the burner off; then start it up again. If the adjustment is not correct, repeat the previous steps.

16

Double-stage burners

1 with the electrical panel open, prime the oil pump acting directly on the related **CP** contactor (see next picture): check the pump

motor rotation and keep pressing for some seconds until the oil circuit is charged;

2 bleed the air from the **M** pressure gauge port by loosing the cap without removing it, then release the contactor.

Suntec E7	Suntec TA.	Suntec AJ6
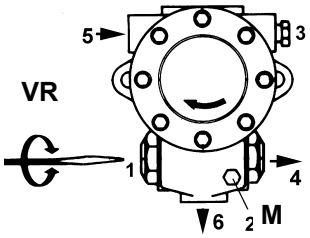	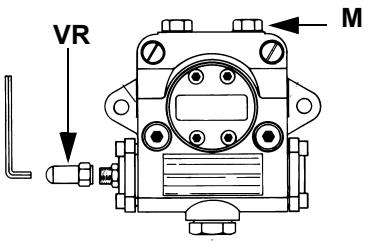	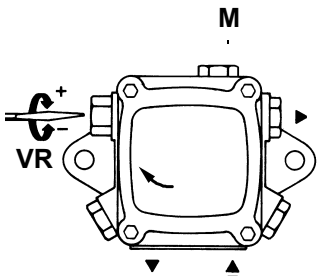

3 drive the burner to high flame stage, by means fo the thermostat **TAB** (high/low flame thermostat - see Wiring diagrams).

4 Only if necessary, adjust the supply pressure as follows;insert a pressure gauge into the port shown on figure and act on on the pump adjusting screw **VR**. Pressure values are indicated at the beginning of this paragraph.

5 the oil flow rate in the high flame stage is the maximum pressure with the return line closed

6 To adjust the **air flow rate in the high flame stage**, loose the **RA** nut and screw **VRA** as to get the desired air flow rate: moving the rod **TR** towards the air damper shaft, the air damper opens and consequently the air flow rate increases, moving it far from the shaft the air damper closes and the air flow rate decreases.

Note: once the procedure is perfomed, be sure that the blocking nut **RA** is fasten. Do not change the position of the air damper rods.

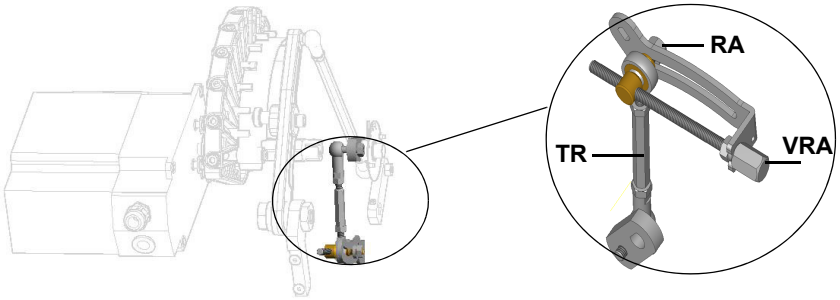

7 drive the burner to low flame by means of the **TAB** thermostat.

8 To perform the regulation, remove the cap **D** and loosen the screw **V**, by means of a screwdriver. The regulating screw **V** acts on the return pressurefrom the nozzle. Set the pressure to the minimum value of 5 bar. Read the values on the pressure gauge placed on the regulator's coupling **M**. Once the regulation is accomplished, replace cap **D**.

Note: After a certain operating period, the pressure can change because of some dirt on the needle's seal: remove the screw **VT** and clean.

Pressure gauge port

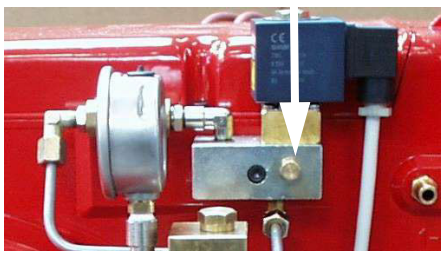

Fig. 8

Fig. 9 - Oil manual governor

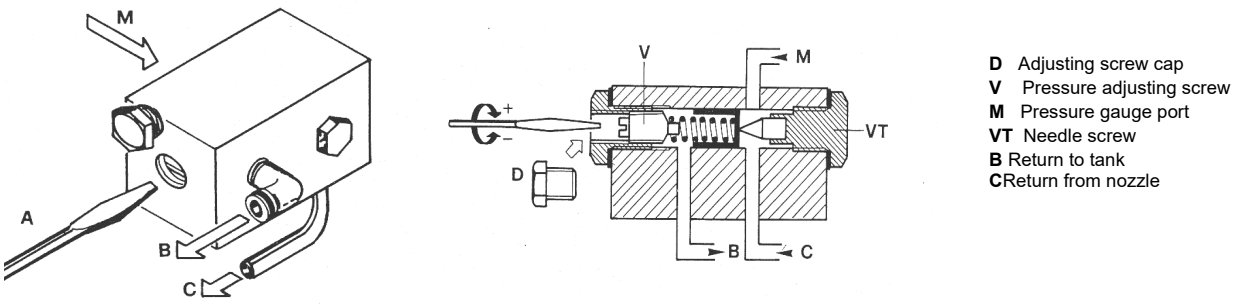

D Adjusting screw cap
V Pressure adjusting screw
M Pressure gauge port
VT Needle screw
B Return to tank
C Return from nozzle

Fig. 10

9 always checking the combustion values, adjust the low flame air flow rate by means of the actuator ST1 (Berger)/III (Siemens) cam;

10 The low flame position must never match the ignition position that is why cam MV (Berger)/IV (Siemens) must be set 20°- 30° more than the ignition position ST1 (Berger)/III (Siemens).

11 Turn the burner off and go on with the gas operation adjustment.

Berger STA6 B 3.41	**Siemens SQN72**
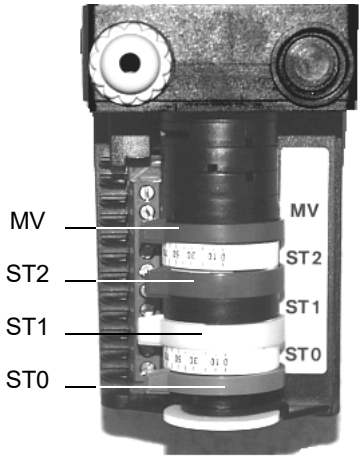	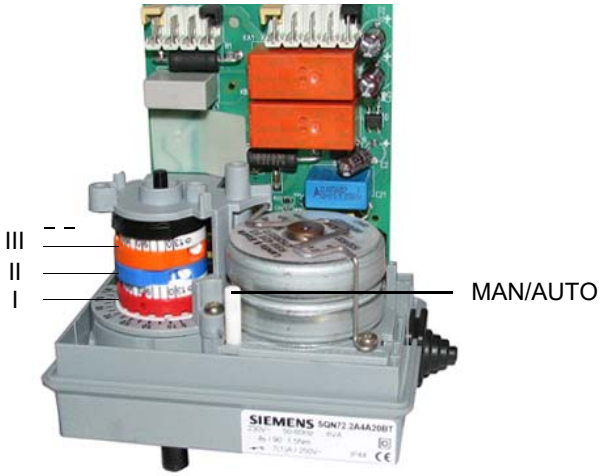
ST2 = High flame cam ST0 = Ignition position ST1 = Low flame MV = Auxiliary cam for the second valve enabling	II = High flame cam (red) II = Ignition position (blue) III = Low flame (orange)) IV = Auxiliary cam for the second valve enabling (black)

ATTENTION! Berger actuator: cams can be moved manually. Siemens actuator: set the MAN/AUTO lever to MAN to move the cams, rememeber to set it to AUTO once the adjustment is accomplished.

Calibration air and gas pressure switches

The **air pressure switch** locks the control box if the air pressure is not the one requested. If it happens, unlock the burner by means of the control box unlock pushbutton, placed on the burner control panel.

The **gas pressure switches** check the pressure to avoid the burner operate when the pressure value is not in the requested pressure range.

Calibration of low gas pressure switch

With the burner operating at maximum power, increase the regulation pressure by slowly turning the control knob clockwise until the burner stops, taking care it does not go into lockout and the display shows the error "**Err c20 d0**".
As for the gas pressure switch calibration, proceed as follows:

- Be sure that the filter is clean.

- Remove the transparent plastic cap.
- While the burner is operating at the maximum output, test the gas pressure on the pressure port of the minimum gas pressure switch.
- Slowly close the manual cutoff valve (placed upstream the pressure switch, see gas train installation diagram), until the detected pressure is reduced by 50%. Pay attention that the CO value in the flue gas does not increase: if the CO values are higher than the limits laid down by law, slowly open the cutoff valve as to get values lower than these limits.
- Check that the burner is operating correctly.
- Clockwise turn the pressure switch adjusting ring nut (as to increase the pressure value) until the burner stops.
- Slowly fully open the manual cutoff valve.
- Refit the transparent plastic cover on the pressure switch.

Calibration the maximum gas pressure switch (when provided)

To calibrate the maximum pressure switch, proceed as follows according to its mounting position:

- remove the pressure switch plastic cover;
- if the maximum pressure switch is mounted upstreaam the gas valves: measure the gas pressure in the network, when flame is off; by means of the adjusting ring nut **VR**, set the value read, increased by the 30%.
- if the maximum pressure switch is mounted downstream the “gas governor-gas valves” group and upstream the butterfly valve: light the burner, adjust it according to the procedure in the previous paragrph. Then, measure the gas pressure at the operating flow rate, downstream the “gas governor-gas valves” group and upstream the butterfly valve; by means of the adjusting ring nut **VR**, set the value read on step 2, increased by the 30%;
- replace the plastic cover.

Calibration of air pressure switch

To calibrate the air pressure switch, proceed as follows:

- Remove the transparent plastic cap.
- Once air and fuel setting have been accomplished, startup the burner.
- During the pre-purge phase o the operation, turn slowly the adjusting ring nut **VR** in the clockwise direction (to increase the adjusting pressure) until the burner lockout, then read the value on the pressure switch scale and set it to a value reduced by 15%.
- Repeat the ignition cycle of the burner and check it runs properly.
- Refit the transparent plastic cover on the pressure switch.

Adjusting the combustion head

Attention! if it is necessary to change the head position, repeat the air and fuel adjustments described above.

Regulating the combustion head

The burner is factory-adjusted with the combustion head in the "MAX" position, accordingly to the maximum power. To operate the burner at a lower power, progressively shift back the combustion head, towards the "MIN" position, screwing the screw **VRT**. The ID index shows how much the combustion head moved.

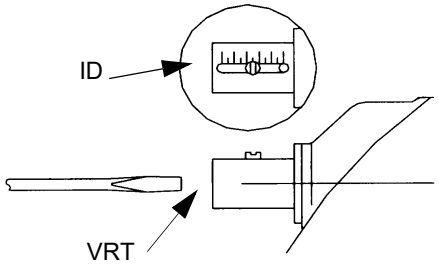

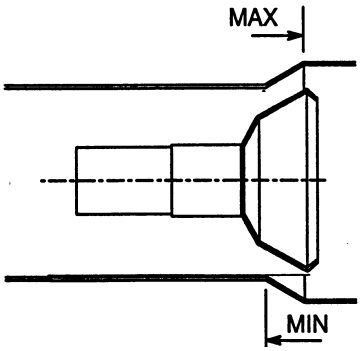

CAUTION: perform these adjustments once the burner is turned off and cooled.

WARNING: please read carefully the paragraph “Fuel” at the beginning of this manual.

Center head holes gas flow regulation for C120A burner with LPG

To adjust the gas flow, partially close the holes, as follows:

1 loosen the three **V** screws that fix the adjusting plate **D**;

2 insert a screwdriver on the adjusting plate notches and let it move CW/CCW as to open/close the holes;

3 once the adjustmet is performed, fasten the **V** screws.

CAUTION: Carry out these operations after switching off and allowing the burner to cool down.

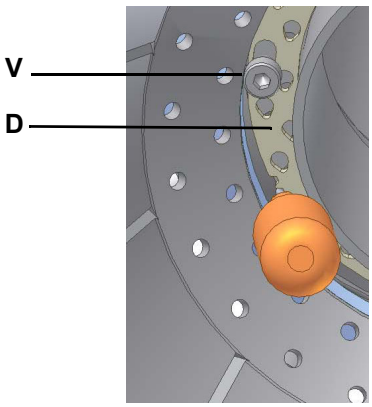

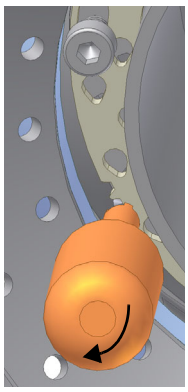

opened holes

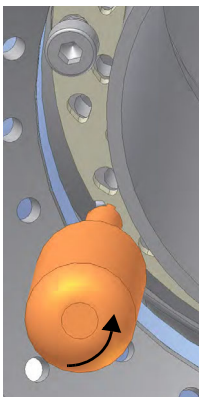

closed holes

The adjusting plate correct position must be regulated in the plant during the commissioning.

The factory setting depends on the type of fuel for which the burner is designed:

- For LPG burners, plate holes are opened about 1.4mm

The factory calibration depends on the type of fuel for which the burner is designed:

PART IV: MAINTENANCE

At least once a year carry out the maintenance operations listed below. In the case of seasonal servicing, it is recommended to carry out the maintenance at the end of each heating season; in the case of continuous operation the maintenance is carried out every 6 months.

WARNING: ALL OPERATIONS ON THE BURNER MUST BE CARRIED OUT WITH THE MAINS DISCONNECTED AND THE FUEL MANAUL CUTOFF VALVES CLOSED!
ATTENTION: READ CAREFULLY THE "WARNINGS" CHAPTER AT THE BEGINNIG OF THIS MANUAL.

ROUTINE MAINTENANCE

- Check and clean the cartdrige of the fuel filter, replace it if necessary;
- carefully check the fuel flexible hoses for leaks;
- check and clean the filter on the fuel pump: filter must be thoroughly cleaned at least once in a season to ensure correct working of the fuel unit. To remove the filter, unscrew the four screws on the cover. When reassemble, make sure that the filter is mounted with the feet toward the pump body. If the gasket between cover and pump housing should be damaged, it must be replaced;
- remove, check and clean the combustion head;
- check the ignition electrodes and their ceramic insulators, clean, adjust and replace if necessary;
- remove and clean the oil nozzles (IMPORTANT: do not clean the nozzles using metallic or sharp utensils, use only solvents or steam); at the end of maintenance operations, refit the burner, turn it on and check the combustion. If in doubt, replace the defective nozzle/s. In case of intensive use of the burner, the nozzles must be replaced at the end of the working season;
- examine and clean the detection electrode/photoelement (according to the burner models), replace it if necessary, in case of doubt, check the detection circuit, after the burner start-up;
- clean and grease levers and rotating parts.

Gas filter maintenance

To clean or remove the filter, proceed as follows:

1 remove the cap unscrewing the fixing screws (A);
2 remove the filtering cartridge (B), clean it using water and soap, blow it with compressed air(or replace it, if necessary)
3 replace the cartridge in its proper position taking care to place it inbetween the guides as not to hamper the cap replacement;
4 be sure to replace the "O" ring into its place (C) and replace the cover fastening by the proper screws (A).

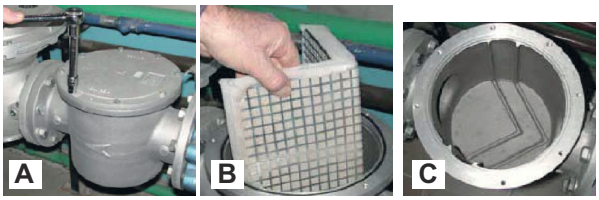

WARNING: Before opening the filter, close the manual cutoff valve downstream the filter and bleed the gas; check that inside the filter there is no pressurised gas.

MultiBloc MBE*MultiBloc VD Mounting*

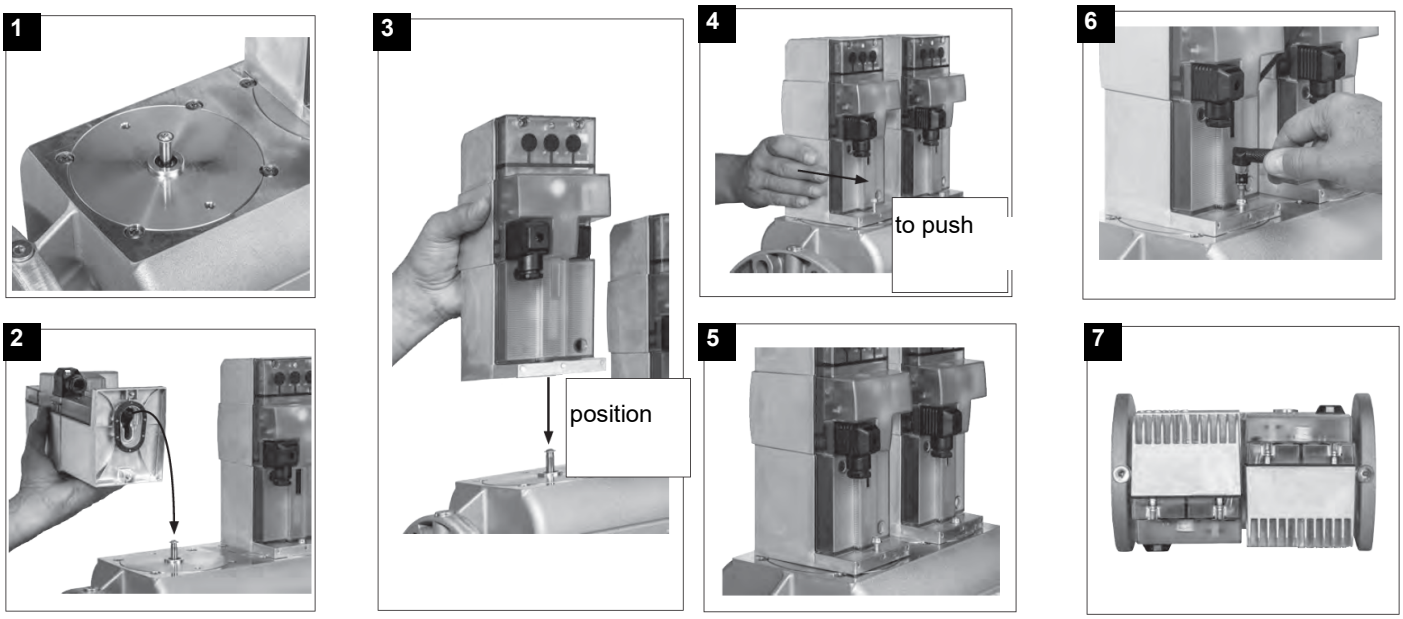

1. Position VD on VB, fig. 2+3.
2. Slide VD forward up to the stop, fig. 4.
3. Screw VD on with 2 M5 screws for each, max. 5 Nm/44 in.-lb., fig. 5/6.
4. VD can be mounted rotated by 180°, fig. 7.

Thecnical procedure of self cleaning filters substitution (valid for all models)

1 Close the bowl valve before the self cleaning filter
2 Switch off any electrical equipment on board on the filter (example motorization or heaters)

WARNING! Drain the system by unscrewing the drain screw on the bottom of the self cleaning filter

3 Disconnect the outlet pipe from the cover of the self cleaning filter
4 Remove the cover with all the filter pack, leaving only the bowl on the line
5 Clean any residue on the bottom of the bowl and clean the seat of the O-ring seal

WARNING! Replace the O-ring seal between the bowl and cover

6 Insert the filter pack again making sure to respect the correct inlet/outlet direction or any references on the cover and tray
7 Replace the filter by following the reverse order operations
8 Make sure there is no leakage and give the power to any electrical equipmente on the filter

Removing the combustion head

1 Remove the top **H**.
2 Remove the **UV** detector out of its housing: disconnect electrode cables and the light oil flexible hoses.
3 Loosen the screws **V** holding the gas manifold **G**, loosen the connectors **E**.
4 Some models are provided with the **T** baffle. Move the gas manifold ahead and remove the baffle.
5 Pull out the complete group as shown in the picture below.
6 Clean the combustion head by means of a vacuum cleaner; scrape off the scale by means of a metallic brush.

Note: to replace the combustion head, reverse the operations described above.

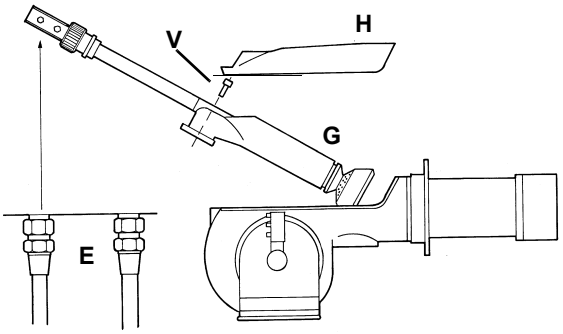

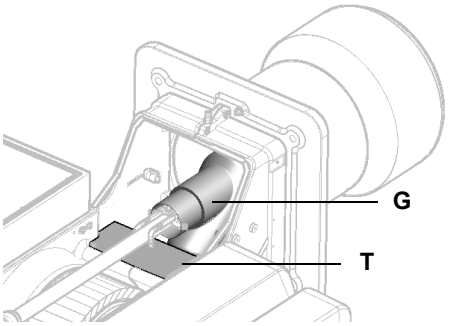

Electrodes Adjustment

Important Note: Check the ignition and detection electrodes after removing/adjusting the combustion head.

ATTENTION: avoid the ignition and detection electrodes to contact metallic parts (blast tube, head, etc.), otherwise the boiler's operation would be compromised. Check the electrodes position after any intervention on the combustion head.

T

C92A, C120A

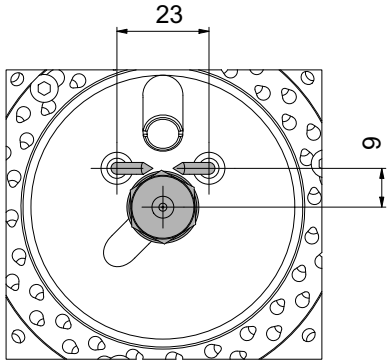

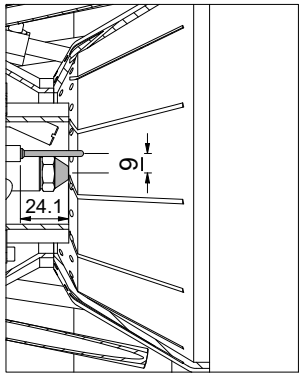

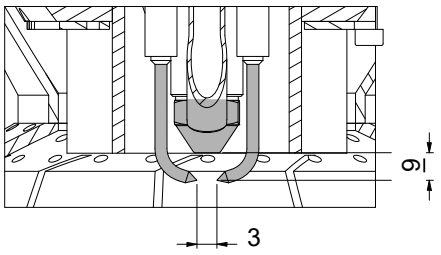

Cleaning/replacing the electrodes

ATTENTION: avoid the electrodes to get in touch with metallic parts (blast tube, head, etc.), otherwise the boiler operation would be compromised. Check the electrodes position after any intervention on the combustion head.

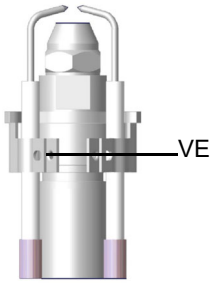

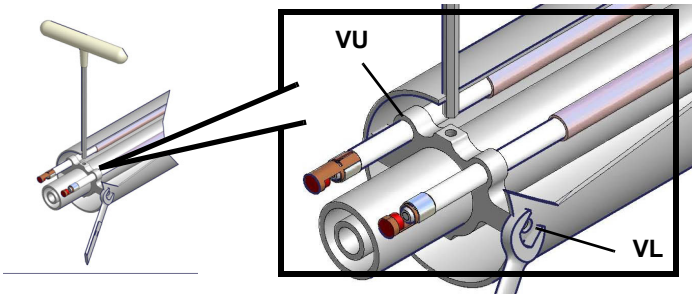

To remove the oil gun, proceed as follows:

1 remove the combustion head as described on the prevoius paragraph;
2 loosen the **VL** screw and remove the oil gun and the electrodes: check the oil gun, replace it if necessary;
3 after removing the oil gun, unscrew the nozzle and replace it if necessary;
4 in order to replace the electrodes, unscrew the **VE** fixing screws and remove them: place the new electrodes being careful to observe the measures showed on pag.: reassemlbe following the reversed procedure.

Caution: adjust the nozzle position according to the air pipe, by means of the **VU** screw, ance the **VL** screw is fastened.

Flame supervision with QRA2 + ACQ3.1A27.. (just for LME2x …)

Device	Flame detector	Measure at the detector UV QRA…
Siemens LME2x	QRA2	200 µA

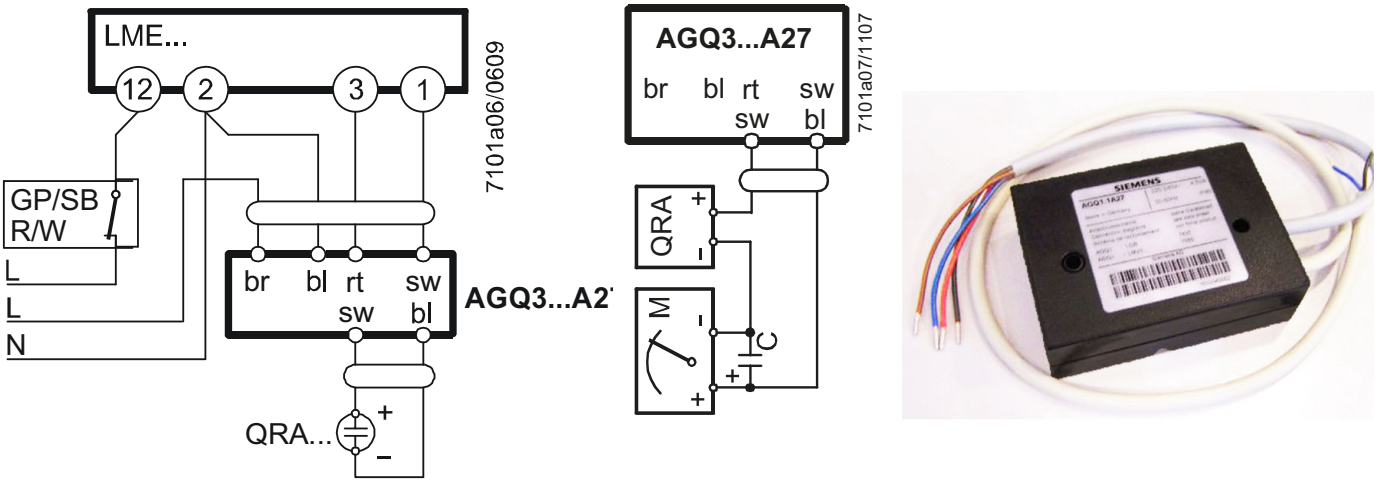

Checking the detection current

To check the detection signal follow the scheme in the picture below. If the signal is less than the value indicated, check the position of the detection electrode or detector, the electrical contacts and, if necessary, replace the electrode or the detector.

Control box	Minimum detection signal
Siemens LME7...	70µA (with UV detector)

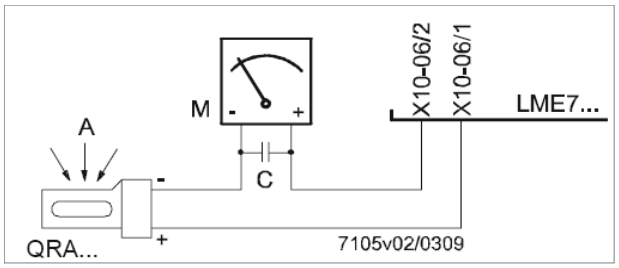

Fig. 11: Detection by photocell QRA..

Flame detection probe

To clean/replace the detection photocell, proceed as follows:

1 Disconnect the system from the electrical power supply.
2 Shut off the fuel supply;
3 remove the photocell from its slot (see next figure);
4 clean the bulbe if dirty, taking care not to touch it with bare hands;
5 if necessary, replace the bulb;

replace the photocell into its slot.

Burner service term

- In optimal operating conditions, and with preventive maintenance, the burner can last up to 20 years.
- Upon expiry of the burner service term, it is necessary to carry out a technical diagnosis and, if necessary, an overall repair.
- The burner status is considered to be at its limit if it is technically impossible to continue using it due to non-compliance with safety requirements or a decrease in performance.
- The owner makes the decision whether to finish using the burner, or replacing and disposing of it based on the actual state of the appliance and any repair costs.
- The use of the burner for other purposes after the expiry of the terms of use is strictly prohibited.

Seasonal stop

To stop the burner in the seasonal stop, proceed as follows:

1 turn the burner main switch to 0 (Off position)
2 disconnect the power mains
3 close the fuel valve of the supply line

Burner disposal

In case of disposal, follow the instructions according to the laws in force in your country about the “Disposal of materials”.

WIRING DIAGRAMS

Refer to the attached wiring diagrams.

WARNING

1 - Electrical supply 230V / 400V 50Hz 3N a.c.
2 - Do not reverse phase with neutral
3 - Ensure burner is properly earthed

TROUBLESHOOTING GUIDE Gas operation

BURNER DOESN'T LIGHT	* No electric power supply	* Restore power supply
	* Main switch open	* Close switch
	* Thermostats open	* Check set points and thermostat connections
	* Bad thermostat set point or broken thermostat	* Reset or replace the thermostat
	* No gas pressure	* Restore gas pressure
	* Safety devices (manually operated safety thermostat, pressure switches and so on) open	* Restore safety devices; wait till boiler reaches operating temperature then check safety device functionality.
	* Broken fuses	* Replace fuses. Check current absorption
	* Fan thermal contacts open (three phases motors only)	* Reset contacts and check current absorption
	* Burner control lock out	* Reset and check its functionality
	* Burner control damaged	* Replace burner control
GAS LEAKAGE: BURNER LOCKS OUT (NO FLAME)	* Gas flow is too low	* Increase the gas flow * Check gas filter cleanness * Check butterfly valve opening when burner is starting (only Hi-Low flame and progressive)
	* Ignition electrodes discharge to ground because dirty or broken	* Clean or replace electrodes
	* Bad electrodes setting	* Check electrodes position referring to instruction manual
	* Electrical ignition cables damaged	* Replace cables
	* Bad position of cables in the ignition transformer or into the electrodes	* Improve the installation
	* Ignition transformer damaged	* Replace the transformer
BURNER LOCKS OUT WITH FLAME PRESENCE	* Wrong setting of flame detector	* Adjust flame detector
	* Flame detector damaged	* Replace flame detector
	* Bad cables of flame detector	* Check cables
	* Burner control damaged	* Replace burner control
	* Phase and neutral inverted	* Adjust connections
	* Ground missing or damaged	* Check ground continuity
	* Voltage on neutral	* Take off tension on neutral
	* Too small flame (due to not much gas)	* Adjust gas flow * Check gas filter cleanness
	* Too much combustion air	* Adjust air flow rate
only FOR LME22: BURNER CONTINUES TO PERFORM ALL ITS FEATURES WITHOUT IGNITING THE BURNER	* Air pressure switch damaged or bad links	* Check air pressure switch functions and links
	* Burner control damaged	* Replace burner control
BURNER LOCKS OUT WITHOUT ANY GAS FLOW	* Gas valves don't open	* Check voltage on valves; if necessary replace valve or the burner control * Check if the gas pressure is so high that the valve cannot open
	* Gas valves completely closed	* Open valves
	* Pressure governor too closed	* Adjust the pressure governor
	* Butterfly valve closed	* Open the butterfly valve
	* Maximum pressure switch open.	* Check connection and functionality
	* Air pressure switch doesn't close the NO contact	* Check connections * Check pressure switch functionality
THE BURNER IS BLOCKED AND THE EQUIPMENT PROVIDES A LOCK CODE "CAUSE AIR PRESSURE SWITCH FAULT"	* Air pressure switch damaged (it keeps the stand-by position or badly set)	* Check air pressure switch functionality * Reset air pressure switch
	* Air pressure switch connections wrong	* Check connections
	* Air fan damaged	* Replace motor
	* No power supply	* Reset power supply
	* Air damper too closed	* Adjust air damper position
BURNER LOCKS OUT DURING NORMAL RUNNING	* Flame detector circuit interrupted	* Check wiring * Check photocell
	* Burner control damaged	* Replace burner control
	* Maximum gas pressure switch damaged or badly set	* Reset pressure switch or replace it
THE BURNER STARTS AND AFTER A WHILE IT REPEATS THE STARTING CYCLE.	* Gas pressure switch badly set	* Reset the pressure switch
	* Gas filter dirty	* Clean gas filter
	* Gas governor too low or damaged	* Reset or replace the governor
BURNER STANDS WHILE RUNNING WITHOUT ANY SWITCHING OF THERMOSTATS	* Thermal contacts of fan motor open	* Reset contacts and check values * Check current absorption
FAN MOTOR DOESN'T START	* Internal motor wiring broken	* Replace wiring or complete motor
	* Fan motor starter broken	* Replace starter
	* Fuses broken (three phases only)	* Replace fuses and check current absorption
BURNER DOESN'T SWITCH TO HIGH FLAME	* Hi-low flame thermostat badly set or damaged	* Reset or replace thermostat
	* Servomotor cam badly set	* Reset servomotor cam
***mechanical only*: SOMETIMES THE SERVOMOTOR RUNS IN THE WRONG WAY**	* Servomotor capacitor damaged	* Replace capacitor
PHASE-TO-PHASE SUPPLY OR PRESENCE OF VOLTAGE ON NEUTRAL*	* Lights up and freezes	* In such cases, insert an RC circuit (our code 2531003).

TROUBLESHOOTNG GUIDE Light oil operation

BURNER DOESN'T LIGHT	* No electric power supply	* Wait for electric power supply is back
	* Main switch open	* Close the switch
	* Thermostats open	* Check set points and thermostat connections
	* Bad thermostat set point or broken thermostat	* Set or replace the thermostat
	* No gas pressure	* Restore gas pressure
	* Safety devices (manually operated safety thermostat or pressure switch, and so on ...) open	* Restore safety devices; wait that boiler reaches its temperature then check safety device functionality.
	* Broken fuses	* Replace fuses. Check current absorption
	* Fan thermal contacts open (only three phases)	* Reset contacts and check current absorption
	* Burner control locked out	* Reset and check its functionality
	* Burner control damaged	* Replace burner control
BURNER LOCKS OUT WITH FLAME PRESENCE	* Flame detector dirty or damaged	* Clean or replace flame detector
	* Burner control damaged	* Replace burner control
	* Smoking flame	* Reset combustion air flow rate * Check the nozzle and, if necessary, replace it * Check cleanness of combustion head * Check chimney suction * Check boiler cleanness
	* Combustion head dirty	* Clean combustion head
BURNER LOCKS OUT WITHOUT ANY FUEL FLOW RATE	* No fuel	* Fill the tank
	* Pump joint broken	* Check pump pressure
	* Pump damaged	* Check pump suction
		* Replace pump
	* Compressed air (or steam) too high	* Released compressed air (or steam) pressure
	* Oil metering valve not open far enough	* Check air pressure
		* Check servomotor position
	* Oil valve not energized	* Check wiring path or replace valve
	* Fan motor not efficient	* Adjust or replace the motor
	* Fan or pump motor runs in the wrong way	* Change rotation
	* Obstructed nozzle	* Clean or replace the nozzle
	* Check valve in the tank locked or leaking	* Clean or replace the valve
	* Oil filter dirty * Pump filter dirty	* Clean filter
	* Solenoid valve dirty or broken	* Clean or replace solenoid valve
BURNER LOCKS OUT WITH FUEL FLOW RATE (NO FLAME)	* Oil pressure too low	* Reset oil pressure
	* Nozzle dirty or damaged	* Clean or replace nozzle
	* Water in the tank	* Take off all the water from the tank
		* Clean all filters
	* Suction too high	* Check suction before pump. If necessary clean filters.
	* Ignition electrodes grounded because dirty or damaged	* Clean or replace electrodes
	* Ignition electrodes badly set	* Check electrodes position referring to instruction manual
	* Cables damaged	* Replace cables
	* Bad position of cables in the ignition transformer or into the electrodes	* Improve the installation
	* Ignition transformer damaged	* Replace the transformer
PUMP TOO NOISY	* Suction too high (over 0,35 bar) (dirty filters, check valve in the tank locked, and so on ...)	* Clean filters * Replace check valve in the tank
	* Flexible hoses damaged	* Replace flexible hoses
	* Air infiltration in the pipes	* Take off all infiltration
	* Pipe too long or too narrow	* Increase line size
BURNER RUMBLES WHEN MODULATING TO HIGH FIRE	* Burner is too lean	* Adjust air-oil ratio
	* Drawer assembly not set properly	* Check drawer position
	* Oil may be too hot	* Check oil temperature
	* Flame is blowing off head	* Check head position
CARBON BUILD-UP ON THE FIRESIDES OF THE BOILER	* Oil flame not retaining to head	
	* Dirty nozzle	* Clean the nozzle
	* Oil spray impinging on burner head	* Check position of the nozzle respect to the head
	* Spray angle of the nozzle too wide	* Reduce spray angle
FLAME IRREGULAR OR SPARKING	* Oil pressure at nozzle too low	* Reset oil pressure
	* Air flow rate too high	* Adjust air flow rate
	* Oil is too cold	* Adjust oil temperature
	* Dirt in the oil	* Check filters
	* Water in the fuel	* Take off all the water
	* Oil impingement on the combustion head	* Drawer assembly far too rear * Nozzle is not protruding through centerhole of air diffuser * Oil flame not retaining to the head
	* Nozzle dirty or damaged	* Clean or, if necessary, replace the nozzle
BURNER LIGHTS BUT FLAME DOESN'T RETAIN TO BURNER HEAD	* Drawer assembly not positioned correctly	* Move forward or backward
	* Nozzle too far forward through centerhole of diffuser	* Move nozzle backward respect to diffuser
	* Oil or air pressure at nozzle is too low	* Increase oil or air pressure
	* Air louver too open	* Reduce air louver opening
	* Too much spread between oil and air (or steam) pressure	* Set the spread to a proper value
FLAME IRREGULAR OR SMOKING	* Not enough combustion air	* Adjust air flow rate
	* Nozzle dirty or damaged	* Clean or, if necessary, replace the nozzle
	* Flame is too big for furnace or nozzle spray angle is wrong	* Check burner-furnace coupling * Change nozzle with a suitable one
	* Nozzle spray angle wrong (flame too long or too wide)	* Replace nozzle
	* Boiler dirty	* Clean the boiler
	* Not enough suction at chimney	* Check chimney cleanness or size
	* Pressure at nozzle too low	* Reset oil pressure
	* Oil too cold	* Reset oil temperature
	* Combustion air inlet dirty	* Clean the air inlet
	* Flame is too small respect to furnace volume	* Replace nozzle or reset pump pressure
FUEL GAS TEMPERATURE TOO HIGH	* Boiler dirty	* Clean the boiler
	* Oil flow rate too high	* Adjust oil pressure or replace nozzle

C.I.B.UNIGAS S.p.A.
Via L.Galvani ,9 - 35011Campodarsego (PD) - ITALY
Tel. +39 049 9200944 - Fax +39 049 9200945
website:www.cibunigas.it-e-mail:cibunigas@cibunigas.it

Note: specifications and data subject to change. Errors and omissions excepted.

LME73.000Ax + PME73.831AxBC
LME73.831AxBC

Service instruction manual

M12921CB Rel.1.2 02/2016

GENERAL FEATURES

LME/ is suitable for gas, light and heavy oil burners
LME7 series has two devices: LME73.000 (hardware) and PME73.831AxBC (programmable unit). The LME73.831AxBC is also available: it has a built in software and it isa not programmable.
LME7 is inside the control panel. If supplied, PME73.831BC is inside the LME7;
The display AZL23.. or AZL21.. is available for Service and hardware setup.

LME7… are used for the startup and supervision of 2-stage/progressive, modulating forced draft gas burners in intermittent operation.
The flame is supervised with an ionization probe, optionally with UV flame detector QRA2..., QRA4.U or QRA10....
Integrated in the LME7... basic unit are:
• Burner control
• BCI
• Control for one actuator
• Lockout reset button (info button)
• 3 multicolor signal lamp LED for operations and fault notifications
• 3 x 7-segment display for service, fault and operating state information
• Interface for program module (no function)
Passwords protect the different parameter levels against unauthorized access. Basic settings that the plant operator can make on site require no password.
Functions:
- Undervoltage detection
- Electrical remote reset facility
- Accurate control times thanks to digital signal handling
- Multicolor indication of fault status and operating state messages
- Air pressure supervision with function check of air pressure switch during start and operation (gas)
- Repetition limitation
- Controlled intermittent operation after 24 hours of continuous operation*
- BCI
- Indication of program sequence

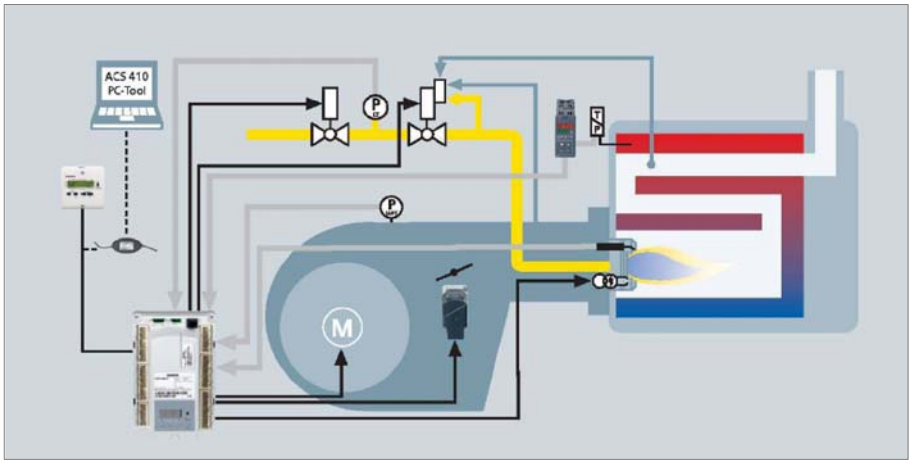

* after no more than 24 hours of continuous operation, the burner control initiates automatic controlled shutdown followed by a restart.

User interface :

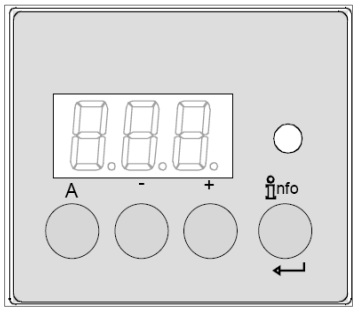

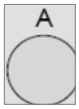	***Button A*** - Display preset output - In lockout position: Power value to the time of fault
	I***nfo and Enter button*** - Reset in the event of fault, changeover visual diagnostic of the cause of fault (refer to chapter Diagnostics of cause of fault)
	- button - Display flame signal current 2 or phases display - In lockout position: MMI phase to the time of fault
	+ button - Display flame signal current 1 or phases display - In lockout position: MMI phase to the time of fault
	3 multicolor signal lamp - Refer to chapter “Blink code table”
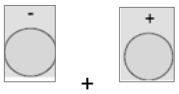	**+ and - button: Escape function** (press + and - simultaneously) - No adoption of value - One menu level up - Keep depressed for >1second for backup / restore function

First startup when PME is supplied or PME replacement:

First startup:
1) insert a new PME
2) turn the power on; The diplay shows "rst" and "PrC" one after the other.
3) keep pushing the INFO 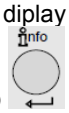 button more than 3 seconds; "run" appears; PME parameters will be transferred to LME
4) at the end, "End" and "rst" appears one after the other; Later (2'), the control box locks out "Loc 138"
5) reset the control box by pressing the INFO button (for less than 3 seconds)
Now the display shows "OFF"; the burner is ready to be started.

Replacement:
1) Turn off the burner, replace the existing PME with a new one
2) For the first startup, repeat the above procedure, from step 2.

List of phase display on board LME :

Phase number of 7-segment display	**LED**	**Function**
Standby		
OFF	Off	Standby, waiting for heat demand
P08	Off	Mains ON / test phase (e.g. detector test)
Startup		
P21	Yellow	Safety valve ON, air pressure switch test / POC test (timeout / locking
P22	Yellow	Fan motor ON / air pressure switch test / settling time
P24	Yellow	Actuator opens in prepurging position
P30	Yellow	Prepurging
P36	Yellow	Actuator closes in ignition load / low-fire position
P38	Yellow blinking	Preignition time
P40	Yellow blinking	1st safety time (TSA1) / ignition transformer ON
P42	Green	Safety time (ignition transformer OFF), flame check
P44	Green	Interval: End of safety time and fuel valve 1 (V1) ON Interval: End of safety time and load controller (LR) release
P50 Green	P50 Green	2nd safety time (TSA2)
P54 Green	P54 Green	P259.01: Actuator opens in > low-fire
P54 Green	P54 Green	P260: Actuator closes in low-fire
oP1 Green	oP1 Green	Interval until release of load controller target (analog or 3-position step input)
Operation		
oP	Green	Operation, modulating operation
Shutdown		
P10	Yellow	Shutdown, actuator opens in CLOSE position (home run)
P72	Yellow	Actuator opens in high-fire position / end of operation
P74	Yellow	Postpurging
Valve proving		
P80	Yellow	Test space evacuating
P81	Yellow	Checking time fuel valve 1
P82	Yellow	Test space filling
P83	Yellow	Checking time fuel valve 2
Waiting phases (start prevention)		
P01	Red / yellow blinking	Undervoltage
P02	Yellow	Safety loop open
P04	Red / green blinking	Extraneous light on burner startup (timeout / locking after 30 s)
P90	Yellow	Pressure switch-min open
Lockout		
LOC	Red	Lockout phase

Operation :

	The lockout reset button (info button) (EK) is the key operating element for resetting the burner control and for activating / deactivating the diagnostics functions.
	The multicolor signal lamp (LED) is the key indicating element for visual diagnostics.

Both lockout reset button (EK) and signal lamp (LED) are located in the control panel.
There are 2 diagnostics choices:
1. Visual diagnostics: Indication of operating state or diagnostics of cause of fault
2. Diagnostics: Via internal display or to AZL2.. display and operating unit
Visual diagnostics:
In normal operation, the different operating states are indicated in the form of color codes according to the color code table given below.

Color code table for multicolor signal lamp (LED) **:**

State	Color code	Color
Waiting time (tw), other waiting states	❍.....	OFF
Ignition phase, ignition controlled	●❍●❍●❍●❍●❍●❍●	Blinking yellow
Operation, flame o.k.	□.....	Green
Operation, flame not o.k.	□❍□❍□❍□❍□❍□❍	Blinking green
Extraneous light on burner startup	□▲□▲□▲□▲□▲□▲	Green-red
Undervoltage	●▲●▲●▲●▲●▲●▲	Yellow-red
Fault, alarm	▲.....	Red
Error code output (refer to «Error code table»)	▲❍ ▲❍ ▲❍ ▲❍	Blinking red
Interface diagnostics	▲▲▲▲▲▲▲▲	Red flicker light
Heating request	●.....	Yellow
Heating request	●●▲●●▲●●▲●●▲●●	Yellow

Key

.....	Steady on
❍	Led off
▲	Led red
●	Led yellow
□	Led green

Program sequence :

Version 1:

- Ignition load < low-fire
- Prepurging in high-fire
- Parameter 515 = 1 (condition parameter 259.01 > 0 seconds)

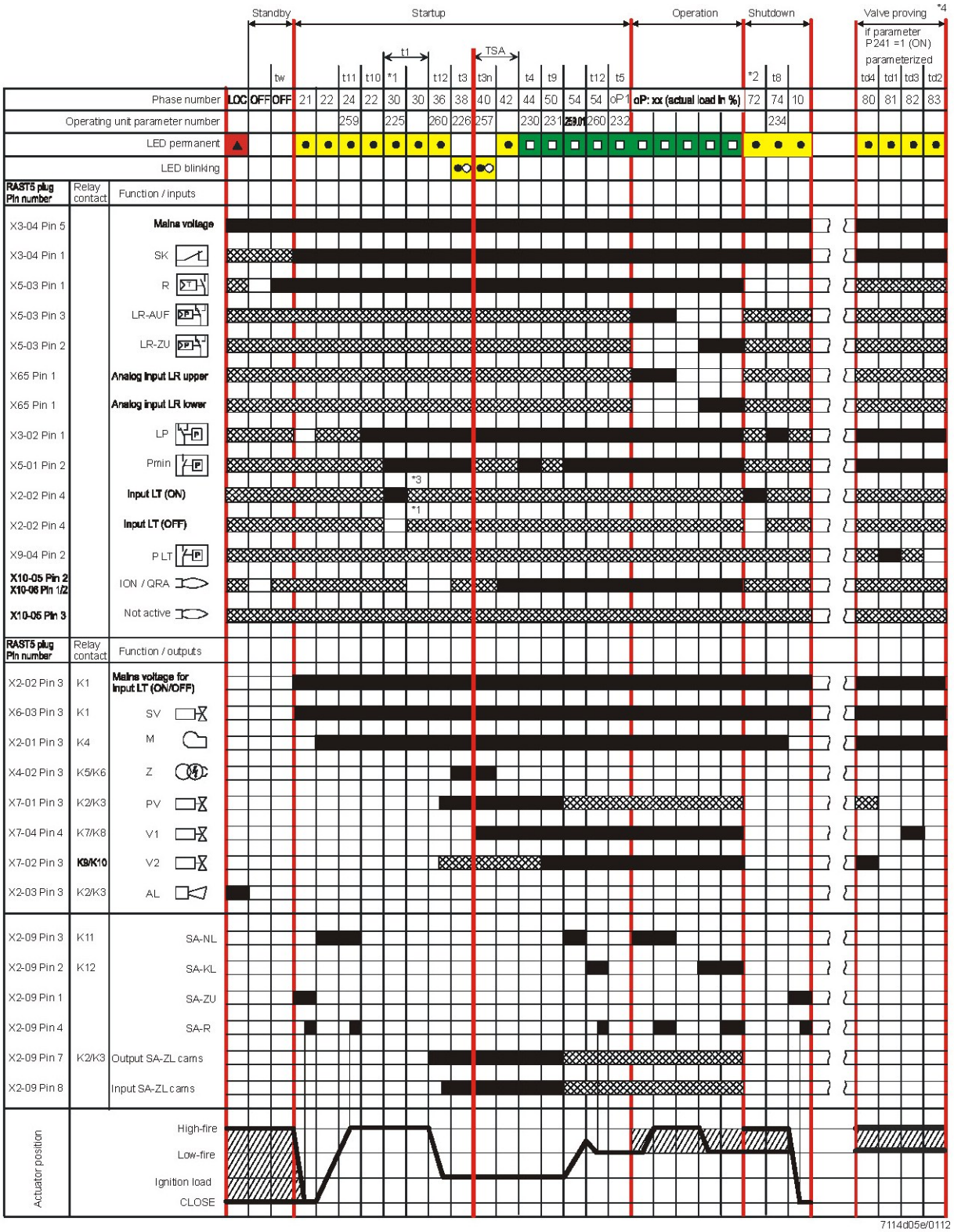

Program sequence :

Version 2:

- Ignition load > low-fire
- Prepurging in high-fire
- Parameter 515 = 1 (condition parameter 259.01 = 0 seconds)

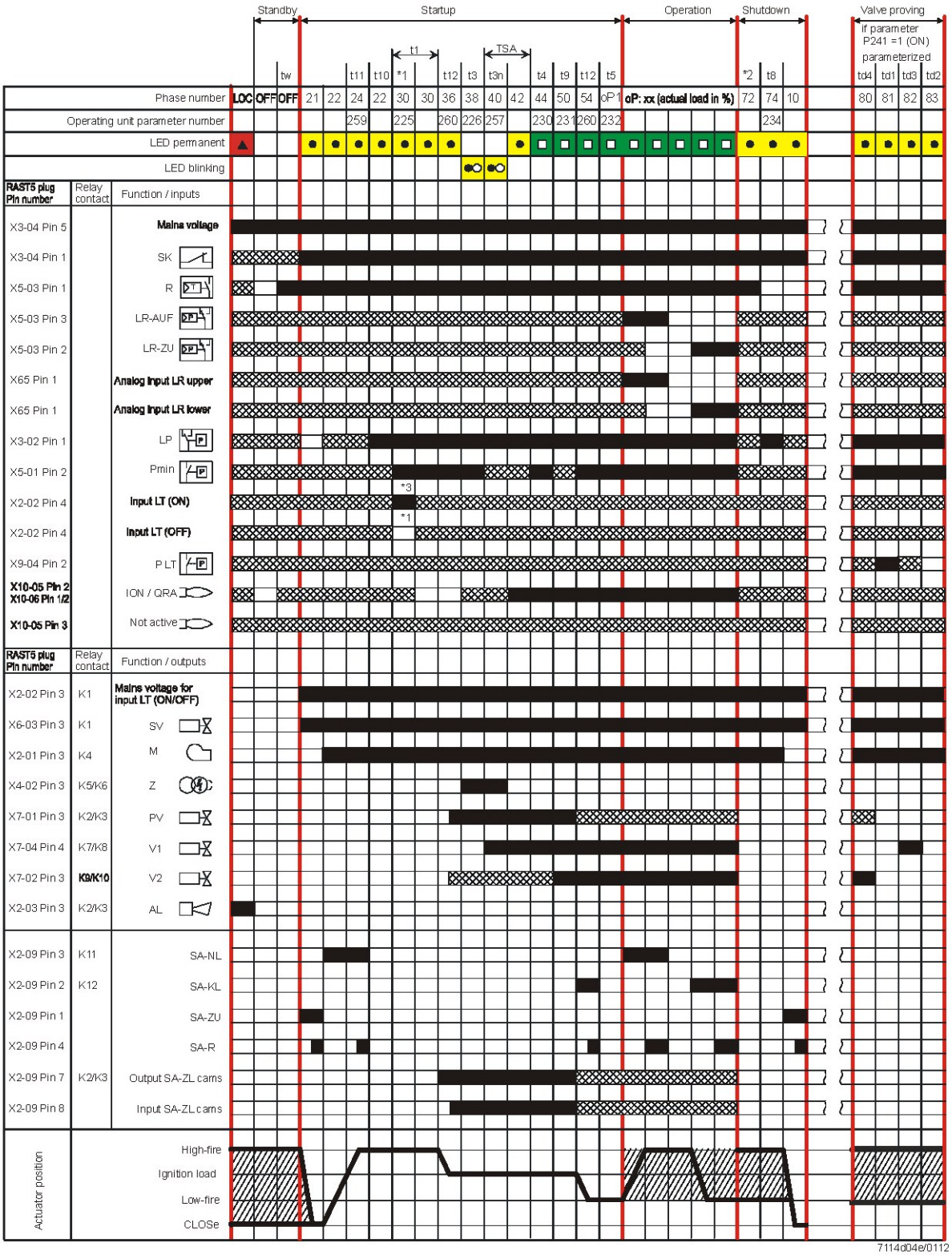

Phase number	Function
LOC	Lockout phase
OFF	Standby, waiting for heat demand
oP	Operation, modulating operation
oP1	Interval until release of load controller target (analog or 3-position step input)
01	Under voltage
02	Safety loop open
04	Extraneous light on burner startup (timeout/locking after 30 seconds)
08	Mains ON/test phase (e.g. detector test)
10	Shutdown, actuator opens in CLOSE position (homerun)
21	Safety valve ON, air pressure switch OFF, actuator opens in CLOSE position
22	Part 1: Fan motor ON
	Part 2: Specified time (t10) air pressure switch (LP)
	Message (timeout) stabilization air pressure switch
24	Actuator opens in prepurge position
30	Part 1: Prepurge time (t1) without extraneous light test
	Valve proving after mains ON, lockout
	Part 2: Prepurge time (t1) with extraneous light test
36	Actuator closes in ignition load
38	Preignition (t3)
40	Postignition time (t3n), parameter 257 + 0.3 seconds
42	Flame detection
44	Interval (t4): End of safety time (TSA) and burner valve 2 ON
50	2nd safety time (t9)
54	Parameter 259.01: Actuator opens in > low-fire
	Parameter 260: Actuator closes in low-fire
72	End of operation, checking if valve proving (LT) shall be performed
74	Postpurging (t8)
80	Test space evacuation (td4)
81	Test time (td1) fuel valve 1 (V1)
82	Test space filling (td3)
83	Test time (td2) fuel valve 2 (V2)
90	Pressure switch-min open safety shutdown
*1	Valve proving is conducted when…
	- parameter 241.00 = 1 and parameter 241.02 = 1, or
	- parameter 241.00 = 1 and parameter 241.01 = 0
*2	Valve proving is conducted when…
	- parameter 241.00 = 1 and parameter 241.02 = 1, or
	- parameter 241.00 = 1 and parameter 241.01 = 1
*3	Valve proving (LT) will not be performed

Error code table :

Red blink code of fault signal lamp (LED)	Possible cause
2 x blinks	No establishment of flame at the end of the safety time (TSA)
	- Faulty or soiled flame detector - Faulty or soiled fuel valves - Poor adjustment of burner, no fuel - Faulty ignition equipment
3 x blinks	Air pressure switch (LP) faulty - Loss of air pressure after specified time (t10) - - Air pressure switch (LP) welded in no-load position
4 x blinks	Extraneous light on burner startup
5 x blinks	Time supervision air pressure switch (LP) - Air pressure switch (LP) welded in working position
6 x blinks	Actuator position not reached - Actuator faulty - Wrong adjustment of cam - Actuator defective or blocked - False connection - Misadjustment
7 x blinks	Too many losses of flame during operation (limitation of repetitions) - Faulty or soiled flame detector - Faulty or soiled fuel valves - Poor adjustment of burner
8 x blinks	Free
9 x blinks	Free
10 x blinks	Wiring error or internal error, output contacts, other faults
12 x blinks	Valve proving (LT) - Fuel valve 1 (V1) leaking
13 x blinks	Valve proving (LT) - Fuel valve 2 (V2) leaking
14 x blinks	Error in connection with valve closure control POC
15 x blinks	Error code ≥15 Error code 22: Error of safety loop (SL)

During the time the cause of fault is diagnosed, the control outputs are deactivated:
- Burner remains shut down
- External fault indication (AL) at terminal X2-03, pin 3 steady on

Diagnostics of cause of fault is quit and the burner switched on again by resetting the burner control. Press the lockout reset button (info button) for about 1 second (<3 seconds).

Flame detection – detection electrode :

Short-circuit current	Max. AC 1 mA
Required detector current	Min. DC 2 µA, display approx. 45 %
Possible detector current	Max. DC 3 µA, display approx. 100 %
Permissible length of detector cable (laid separately)	30 m (core-earth 100 pF/m)

Measuring circuit

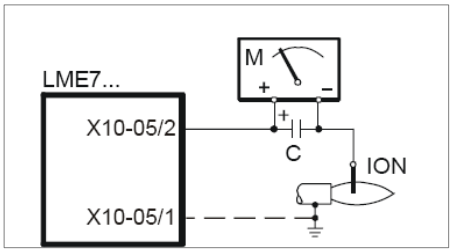

Keys

C	-	Electrolytic condenser 100...470 µF; DC 10...25 V
ION	-	Ionization probe
M	-	Microammeter Ri max. 5,000 Ω

Flame detection – UV probe :

Threshold values when flame is supervised by QRA...

- Start prevention (extraneous light)	Intensity (parameter 954) approx. 12 %
- Operation	Intensity (Parameter 954) approx. 13 %
Operating voltage	AC 280 V ±15 %
Mains frequency	50...60 Hz ±6 %
Required detector current	Min. 70 µA
Possible detector current	
- Operation	Max. 700 µA
Perm. length of detector cable	
- Normal cable, laid separately [1])	Max. 100 m

[1]) Multicore cable not permitted

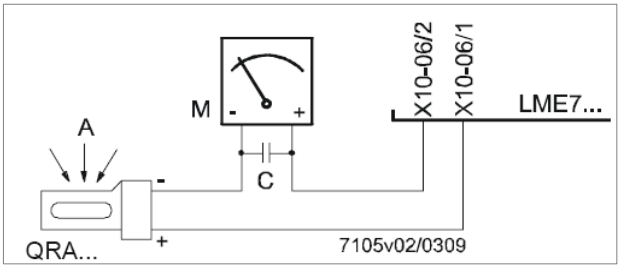

Keys

A	-	Exposure to light
C	-	Electrolytic condenser 100...470 µF; DC 10...25 V
M	-	Microammeter Ri max. 5,000 Ω

Warning!
Input QRA... is not short-circuit-proof!
Short-circuits of X10-06/2 against earth can destroy the QRA... input
Simultaneous operation of flame detector QRA... and detection electrode is not permitted
To make certain the age of the UV tube can be determined, the LME7... basic unit must always be connected to mains supply.

Gas proving system :

Valve proving is dependent on input valve proving ON / OFF (X2-02). When a leak is detected, the gas valve proving function ensures that the gas valves will not be opened and that ignition will not be switched on. Lockout will be initiated.
.

Valve proving with separate pressure switch (P LT)
Step 1: td4 – Evacuation of test space
Gas valve on the burner side is opened to bring the test space to atmospheric pressure.
Step 2: td1 – Test atmospheric pressure
When the gas has closed, the gas pressure in the test space must not exceed a certain level.
Step 3: td3 Filling of test space
Gas valve on the mains side opens to fill the test space.
Step 4: td2 – Test gas pressure
When the gas valve has closed, the gas pressure in the test space must not drop below a certain level.

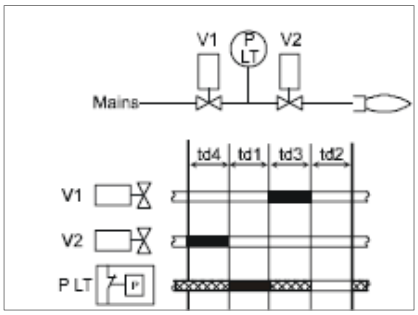

Controllo tenuta con pressostati separati

Keys
td1 Test atmospheric pressure
td2 Test gas pressure
td3 Filling of test space
td4 Evacuation of test space
V… Fuel valve
PLT Pressure switch valve proving
Input / output signal 1 (ON)
Input / output signal 0 (OFF)
Input permissible signal 1 (ON) or 0 (OFF)

No.	***Parameter***
242	Valve proving evacuation of test space
243	Valve proving time test atmospheric pressure
244	Valve proving filling of test space
245	Valve proving time test gas pressure

Instruction, control and modify via AZL2x :

The AZL2x.. display/programming unit is shown below:

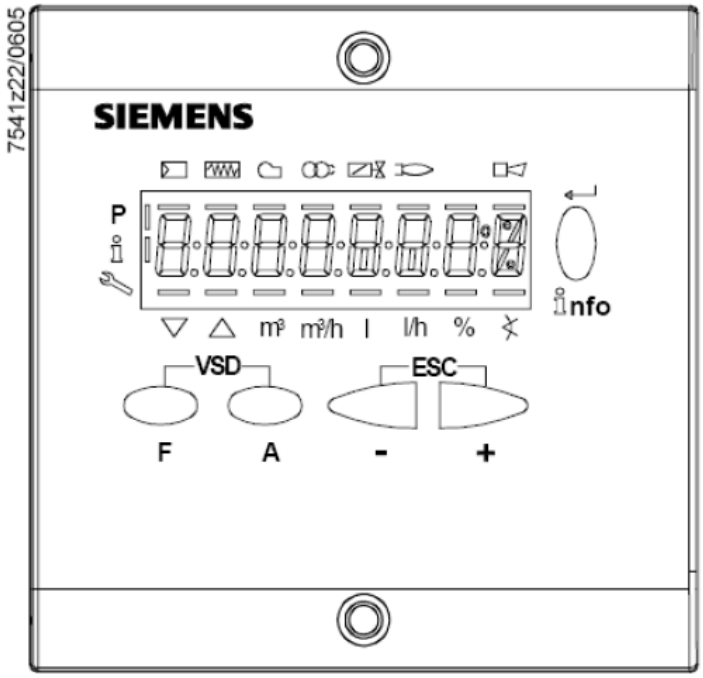

The keys functions are the following:

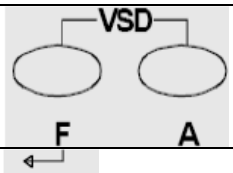	Key F + A While pressing the two keys contemporarly, the code message will appear: by entering the proper password it is possible to access the Service mode.
	Info and Enter keys Used for Info and Service menues Used as Enter key in the setting modes Used as Reset key in the burner operation mode Used to enter a lower level menu
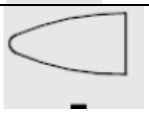	Key - Used for one menu level down Used to decrease a value
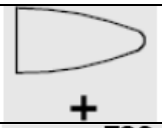	Key + Used for one menu level up Used to increase a a value
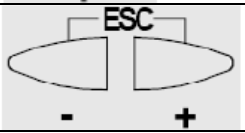	Keys (+ & -)= ESC By pressing + and - at the same time, the ESCAPE function is performed No adoption of value One menu level down

The display will show these data:

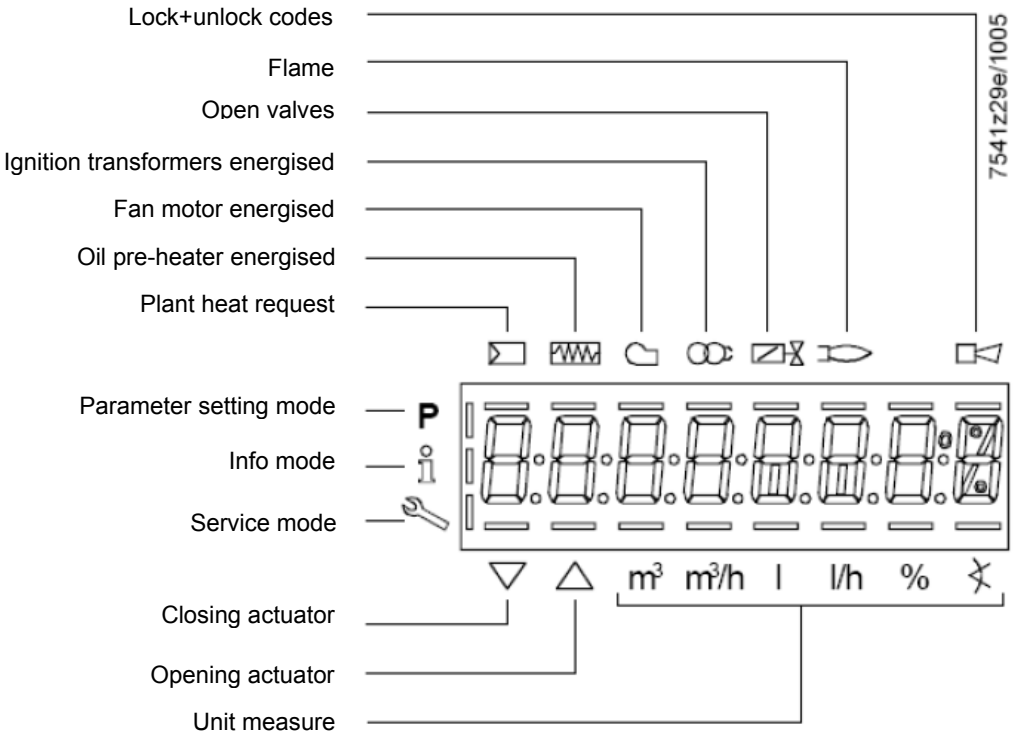

While pushing the

button together with whatever else button, LME73 locks out; the display shows

On stand-by position, 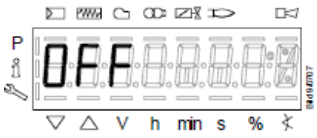

appears

On operation, all the phases appears with their number.

List of phase with display AZL2x :

Phase number	**Function**
Standby	
OFF	Standby, waiting for heat request
Ph08	Power ON / test phase (e.g. detector test)
Startup	
Ph21	Safety valve ON, air pressure switch test / POC test (timeout / locking after 5 seconds), actuator opens in low-fire position / CLOSE position
Ph22	Fan motor ON or air pressure switch test / settling time
Ph24	Actuator travels to the prepurge position
Ph30	Prepurging
Ph36	Actuator closes until ignition load / low-fire is reached, and parameter 259.02: Actuator opens to a position > ignition load
Ph38	Preignition
Ph40	1st safety time (TSA1) / ignition transformer ON
Ph42	Safety time (ignition transformer OFF), flame check
Ph44	Interval: End of safety time and fuel valve 1 (V1) ON
Ph50	2nd safety time (TSA2)
Ph54	P259.01: Actuator opens in > low-fire
Ph54	P260: Actuator closes in low-fire
oP1	Interval until release of load controller target (analog or 3-position step input)
Operation	
oP	Operation, modulating operation
Shutdown	
Ph10	Shutdown, actuator opens in CLOSE position (home run)
Ph72	Actuator opens in high-fire position / end of operation
Ph74	Postpurging
Valve proving	
Ph80	Test space evacuating
Ph81	Checking time fuel valve 1
Ph82	Test space filling
Ph83	Checking time fuel valve 2
Waiting phases (start prevention)	
Ph01	Undervoltage
Ph02	Safety loop open
Ph04	Extraneous light at burner startup (timeout / locking after 30 seconds)
Ph90	Pressure switch-min open → safety shutdown
Lockout	
LOC	Lockout phase

Error code list with operation via internal AZL :

Error code	*Clear text*	*Possible cause*
Loc 2	No establishment of flame at the end of the safety time (TSA)	- Faulty or soiled fuel valves - Faulty or soiled flame detector - Poor adjustment of burner, no fuel - Faulty ignition equipment
Loc 3	Air pressure faulty (air pressure switch (LP) welded in no-load position, decrease to spe-cified time (t10) (air pressure switch (LP) re-sponse time)	Air pressure switch (LP) faulty - Loss of air pressure signal after specified time (t10) - Air pressure switch (LP) is welded in no-load position
Loc 4	Extraneous light	Extraneous light when burner startup
Loc 5	Air pressure faulty, air pressure switch wel-ded in working position	Time out air pressure switch (LP) - Air pressure switch (LP) is welded in working position
Loc 6	Fault of actuator	- Actuator faulty or blocked - Faulty connection - Wrong adjustment
Loc 7	Loss of flame	Too many losses of flame during operation (limitation of repetitions) - Faulty or soiled fuel valves - Faulty or soiled flame detector - Poor adjustment of burner
Loc 8	---	Free
Loc 9	---	Free
Loc 10	Error not relatable (application), internal error	Wiring error or internal error, output contacts, other faults
Loc 12	Valve proving	Fuel valve 1 (V1) leak
Loc 13	Valve proving	Fuel valve 2 (V2) leak
Loc 22	Safety loop open	- Gas pressure switch-max open - Safety limit thermostat cut out
Loc 138	Restore process successful	Restore process successful
Loc 167	Manual locking	Manual locking
Loc: 206	AZL2... incompatible	Use the latest version

Entering the Parameter levels:

y means of a proper use of the keys, it is possible to enter the various level parameters, as shown in the following flow chart :

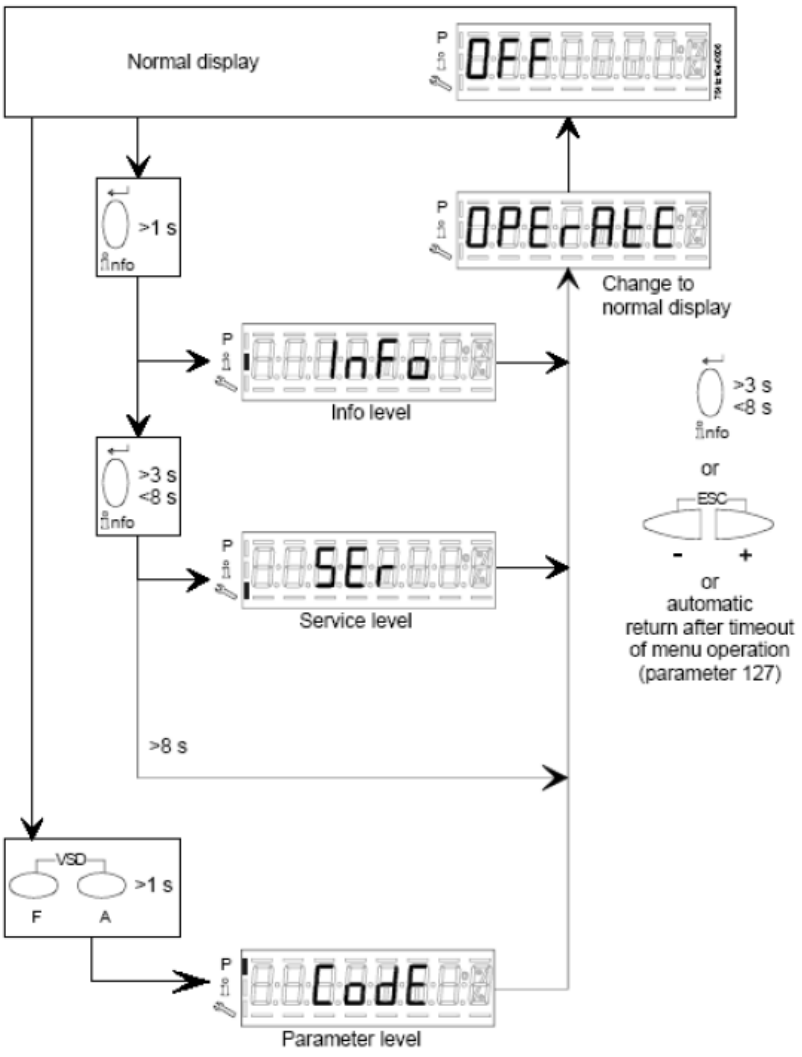

Info level :

Keep pushing the

button until 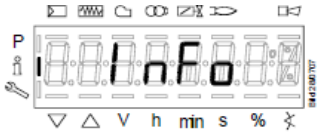

appears. Use + or - for scrolling the parameter list. If on the right side a dash-dot appears, it means the display doesn't show the full description. *Push*

again for 1 to 3 s in order to show the full description.

Below the visible **Info** parameters:

Parameter number	Parameter list PME73.000Ax + PME73.831AxBC LME73.831AxBC	Edit	Value range Min.	Value range Max.	Resolution	Factory setting	Password level reading from level	Password level writing from level
100	**General**							
102	Identification date	Read only	---	---	---		Info	---
103	Identification number	Read only	0	9999	1		Info	---
113	Burner identification	Read only	x	xxxxxxxx	1		Info	---
164	Numbers of startups resettable	Resettable	0	999999	1		Info	Info
166	Total number of startups	Read only	0	999999	1		Info	---
170.00	Switching cycles actuator relay K12	Read only	0	999999	1		Info	---
170.01	Switching cycles actuator relay K11	Read only	0	999999	1		Info	---
170.02	Switching cycles actuator relay K2	Read only	0	999999	1		Info	---
170.03	Switching cycles actuator relay K1	Read only	0	999999	1		Info	---
171	Max. switching cycles actuator relay	Read only	0	999999	1		Info	---

Service level :

Keep pushing the

button until 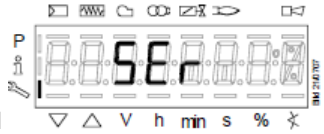

appears. Use + or - for scrolling the parameter list. . If on the right side a dash-dot appears, it means the display doesn't show the full description. *Push*

again for 1 to 3 s in order to show the full description.

Below the visible **Info** parameters:

Parameter number	Parameter list PME73.000Ax + PME73.831AxBC LME73.831AxBC	Edit	Value range Min.	Value range Max.	Resolution	Factory setting	Password level reading from level	Password level writing from level
700	**Error history**							
701	Current error:	Read only					Service	---
	00: Error code		2	255	1			
	01: Startup meter reading		0	999999	1			
	02: MMI phase		---	---	---			
	03: Power value		0%	100%	1			
702	Error history former 1:	Read only					Service	---
	00: Error code		2	255	1			
	01: Startup meter reading		0	999999	1			
	02: MMI phase		---	---	---			
	03: Power value		0%	100%	1			
•								
•								
•								
711	Error history former 10:	Read only					Service	---
	00: Error code		2	255	1			
	01: Startup meter reading		0	999999	1			
	02: MMI phase		---	---	---			
	03: Power value		0%	100%	1			

900	Process data							
936	Normalized speed	Read only	0%	100%	0.01 %		Service	---
951	Mains voltage	Read only	0 V	LME73.000A1: 175 V LME73.000A2: 350 V	1 V		Service	---
954	Flame intensity	Read only	0%	100%	1%		Service	---

Parameter level (Heating engeneering) :

This level lets the engineer to modify some burner parameters. It is protect with a 4 digit password (SO level) and a 5 digit password (OEM level)
Password input : push **F** and **A** buttons together until the display shows "**code"** and 7 underlines. The left one flashes. By **+** or **-** move the flashing underline until it is on the desired position and push "enter". The underline becomes a dash. By means of **+** or **-,** choose the right character and push "enter". Input the whole password and the **PArA** appears and later on **000 Int** .
Scroll the parameters using **+** or **-: 000Int**, **100**, **200**, **500**, **600 are on the display**. Choose the proper parameter group with the **enter** button and scroll the options with **+** e poi **-** (below the full par set: the two columns on the right give the level access). Choose the parameter to be modified with "enter" is writing is allowed. The parameter now flashes: **+** or **–** modifies the parameter and **enter** confirms. **+** and **-** pushed togther movbe the menu one step back. Push **+** and **-** several times in order to get the home position..

Parameter number	Parameter list PME73.000Ax + PME73.831AxBC LME73.831AxBC	Edit	Value range Min.	Value range Max.	Resolution	Factory setting	Password level reading from level	Password level writing from level
0	**Internal parameter**							
41	Heating engineers password (4 characters)	Edit	xxxx	xxxx	---		---	OEM
42	OEM's password (5 characters)	Edit	xxxxx	xxxxx	---		---	OEM
60	Backup / restore	Edit	Restore	Backup	---		---	SO
100	**General**							
123	Min. power control step	Edit	1%	10%	0.1		SO	SO
140	Mode display of Display and operating unit AZL2... 1 = Standard (program phase) 2 = Flame 1 (QRA... / ION) 3 = Flame 2 (QRB... / QRC...) 4 = Active power (power value)	Edit	1	4	4		SO	SO
200	**Burner control**							
224	Specified time (t10) air pressure switch (LP)	Edit	0 s	13.818 s	0.294 s	12,054	SO	OEM
225	Gas: Prepurge time (t1)	Edit	0 s	1237 s	4.851 s	29,106	SO	OEM
226	Gas: Preignition time (t3)	Edit	1.029 s	37.485 s	0.147 s	2,058	SO	OEM
230	Interval (t4): End of safety time (TSA) - fuel valve 1 (V1) ON	Edit	3.234 s	74.97 s	0.294 s	3,234	SO	OEM
231	Interval (t9): Fuel valve 1 (V1) ON - pilot valve (PV) OFF	Edit	0 s	74.97 s	0.294 s	2,940	SO	OEM
232	Interval (t5): Pilot valve (PV) OFF - load controller (LR) release	Edit	2.058 s	74.97 s	0.294 s	8.820	SO	OEM
234	Gas: Postpurge time (t8)	Edit	0 s	1237 s	4.851 s	0	SO	OEM
239	Gas: Intermittent operation after 24 hours of continuous operation 0=OFF 1=ON	Edit	0	1	1	1	SO	OEM

240	Repetition in the event of loss of flame during operation 0 = None 1 = None 2 = 1 x Repetition	Edit	0	2	1	0	SO	OEM
241.00	Valve proving 0 = Off 1 = On	Edit	0	1	1	1	SO	OEM
241.01	Valve proving 0 = During prepurge time (t1) 1 = During postpurge time (t8)	Edit	0	1	1	0	SO	OEM
241.02	Valve proving 0 = According to P241.01 1 = During prepurge time (t1) and postpurge time (t8)	Edit	0	1	1	0	SO	OEM
242	Valve proving test space evacuating	Edit	0 s	2.648 s	0.147 s	2,646	SO	OEM
243	Valve proving time test atmospheric pressure	Edit	1.029 s	37.485 s	0.147 s	10,290	SO	OEM
244	Valve proving test space filling	Edit	0 s	2.648 s	0.147 s	2,646	SO	OEM
245	Valve proving time test gas pressure	Edit	1.029 s	37.485 s	0.147 s	10,290	SO	OEM
254	Response time detector error 0 = 1 s 1 = 3 s	Edit	0	1	1	0	SO	OEM
257	Gas: Postignition time (t3n – 0.3 seconds)	Edit	0 s	13.23 s	0.147 s	2,205	SO	OEM
259.00	Opening time of actuator (t11) (timeout for lockout)	Edit	0 s	1237 s	4.851 s	67,914	SO	OEM
259.01	Opening time of actuator from ignition load to low-fire position	Edit	0 s	37.485 s	0.147 s	14,994	SO	OEM
259.02	Opening time of actuator from low-fire to ignition load position	Edit	0 s	37.485 s	0.147 s	14,994		
260	Closing time of actuator (t12) (timeout for lockout)	Edit	0 s	1237 s	4.851 s	67,914	SO	OEM
500	**Ratio control**							
515	Actuator position during prepurge time (t1) and postpurge time (t8) 0: Purging in low-fire 1: Purging in high-fire	Edit	0	1	1	1	SO	OEM
560	Pneumatic combustion control 0 = off / 3-step modulation 1 = PWM fan / analog modulation ~~2 = air damper / analog modulation (feedback potentiometer ASZxx.3x required)~~	Edit	0	2	1	1	SO	SO

600	Power setting							
654	Analog input (feedback potentiometer ASZxx.3x required) 0 = 3-position step input 1 = 0...10 V 2 = 0...135 Ω 3 = 0...20 mA 4 = 4...20 mA with lockout at I <4 mA 5 = 4...20 mA	Edit	0	5	1	0	SO	SO

WARNING	
Parameter Num. : **41** **42** **60** **123** **140** **242** **243** **244** **245** **259.01**	**Adjustable parameters from SO or OEM levels for LME73.831AxBC**

Note: Specifications and data subject to change. Errors and omissions excepted.

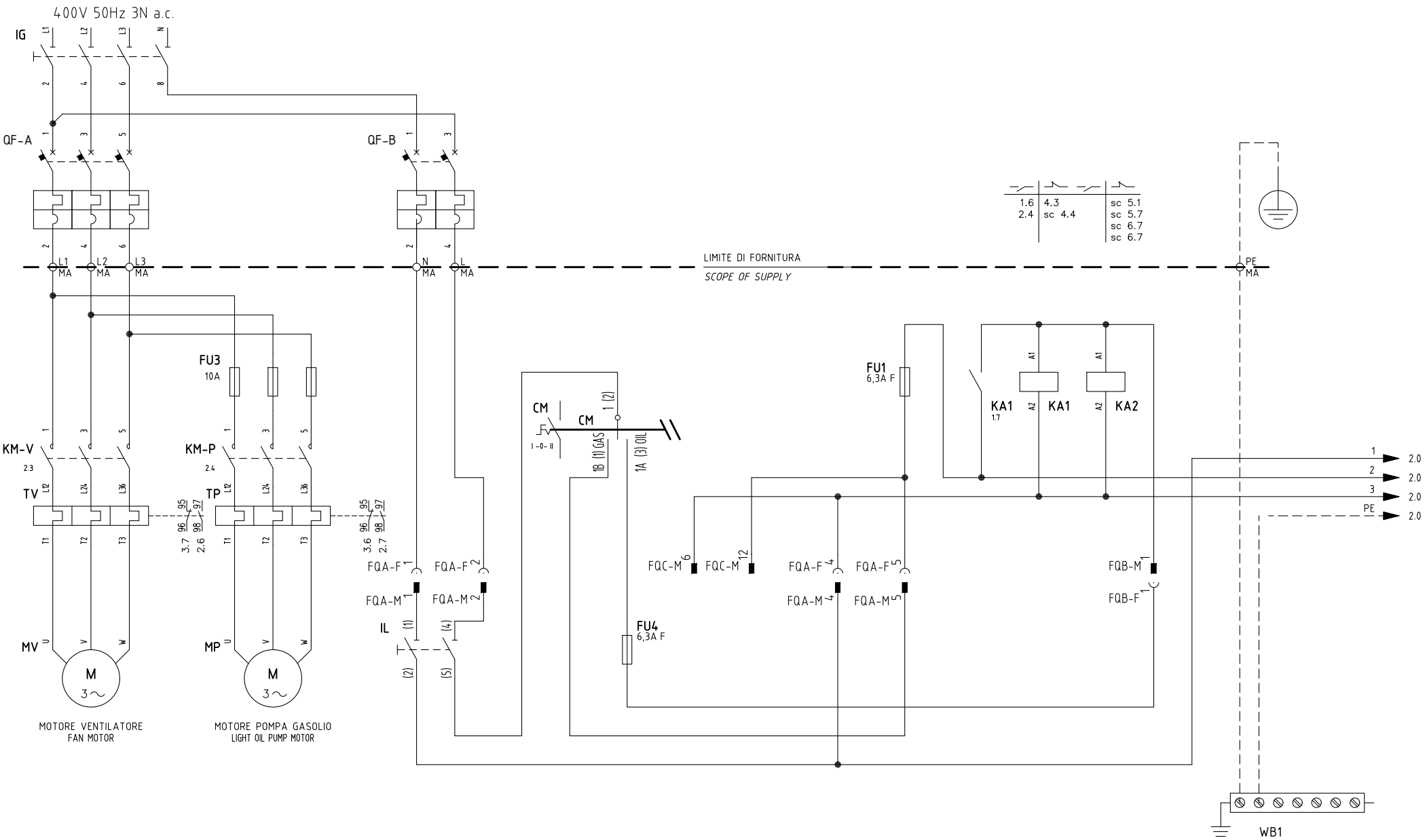

UNIGAS	Impianto: *TIPI/TYPES CxxxA/ExxxA/CxxX/ExxxX MODELLO/MODEL xG−.PR(MD).xx.xx.A.x.xx*	Ordine		Data 23/01/2020	PREC. /	FOGLIO 1
	Descrizione: *WITH LME73.xxx + CIRCUIT 6100574 + MODULATOR RWF55.x / RWF50.2x / 600V / KM3*	Commessa	Data Controllato 23/01/2020	Revisione 00	SEGUE 2	TOTALE 14
		Esecutore U. PINTON	Controllato M. MASCHIO	Dis. N. 05 − 1258		

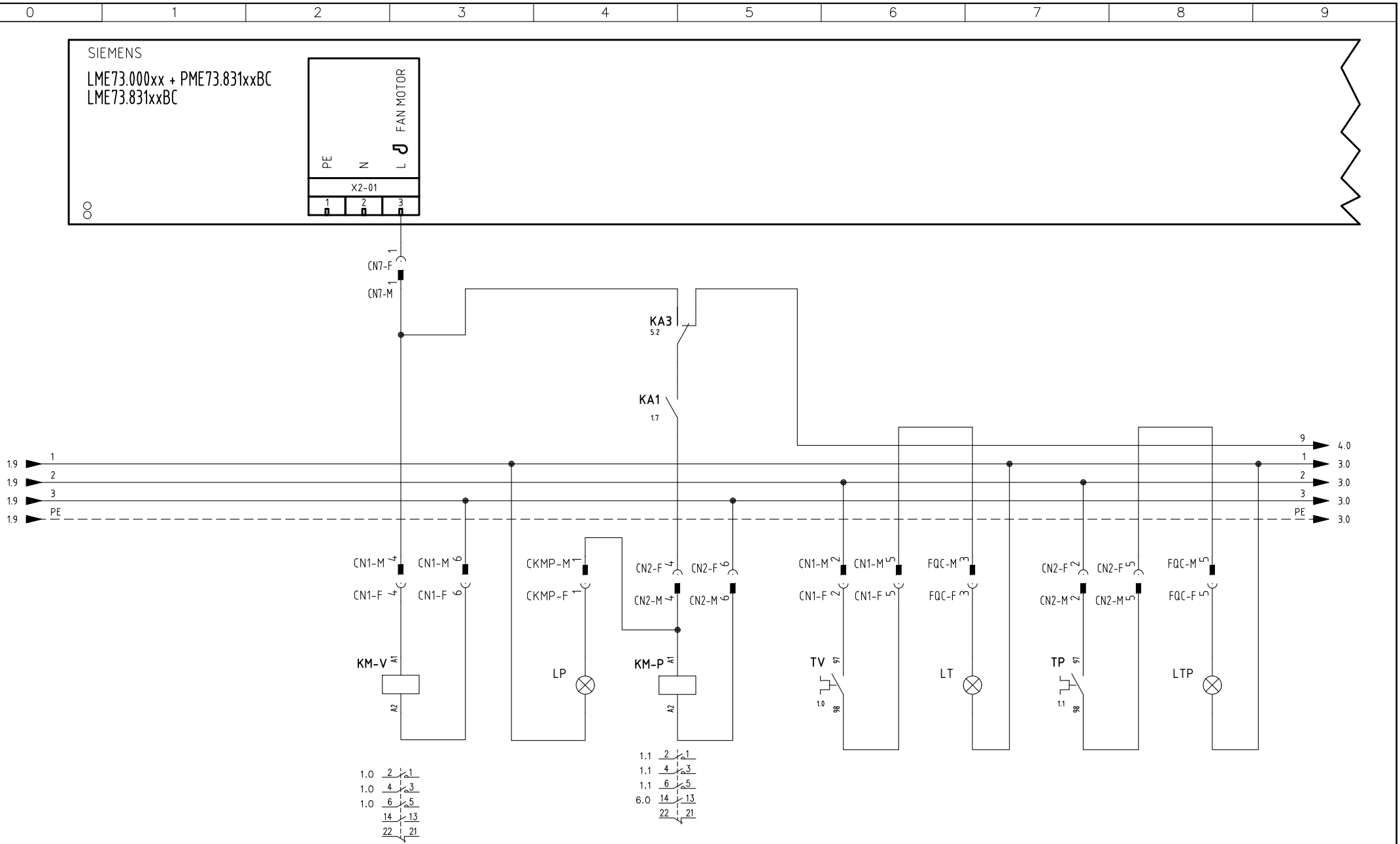

Data 23/01/2020		PREC.	FOGLIO
Revisione 00		1	2
Dis. N. 05 – 1258		SEGUE	TOTALE
		3	14

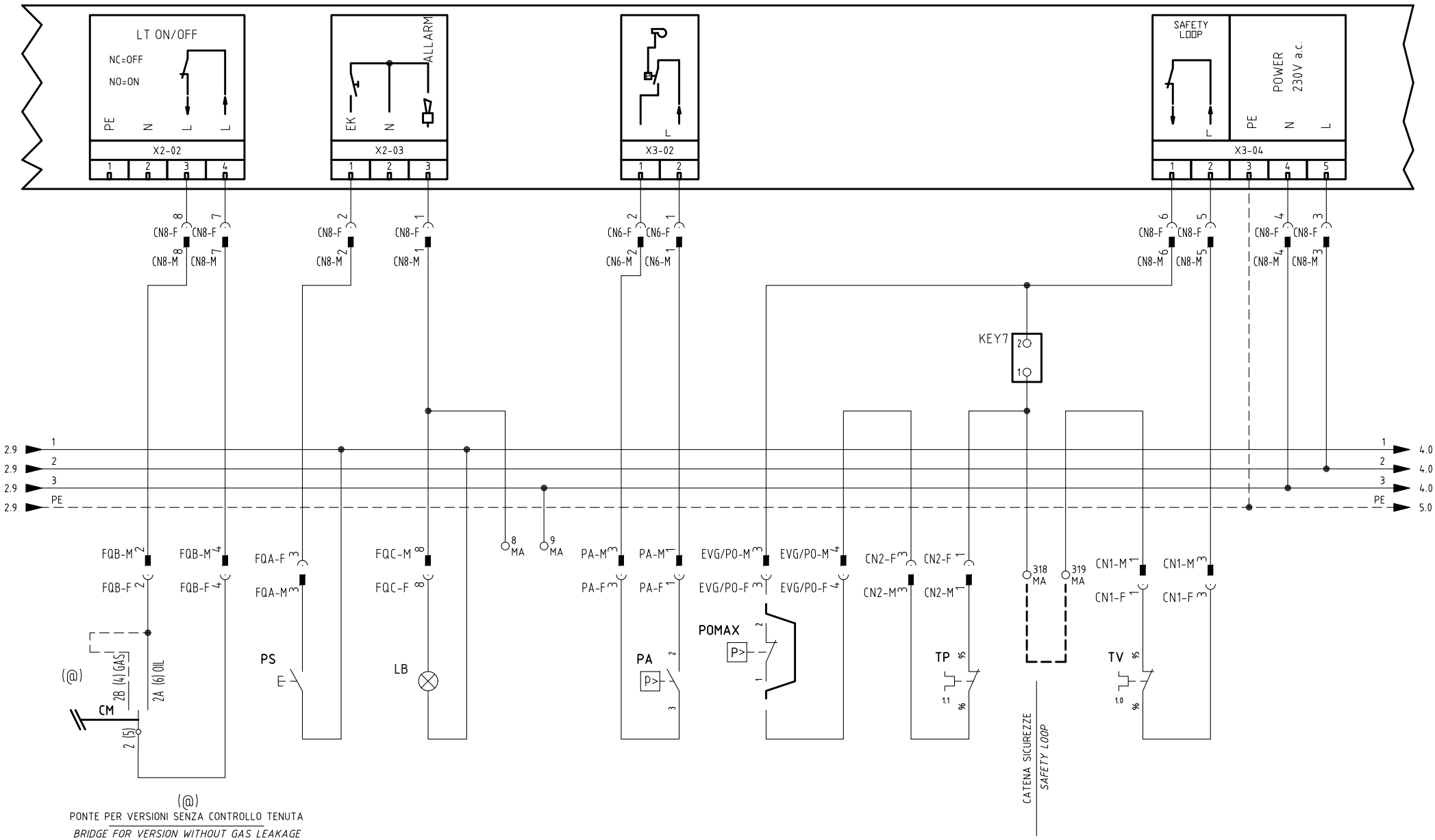

Data 23/01/2020		PREC.	FOGLIO
Revisione 00		2	3
Dis. N. 05 – 1258		SEGUE	TOTALE
		4	14

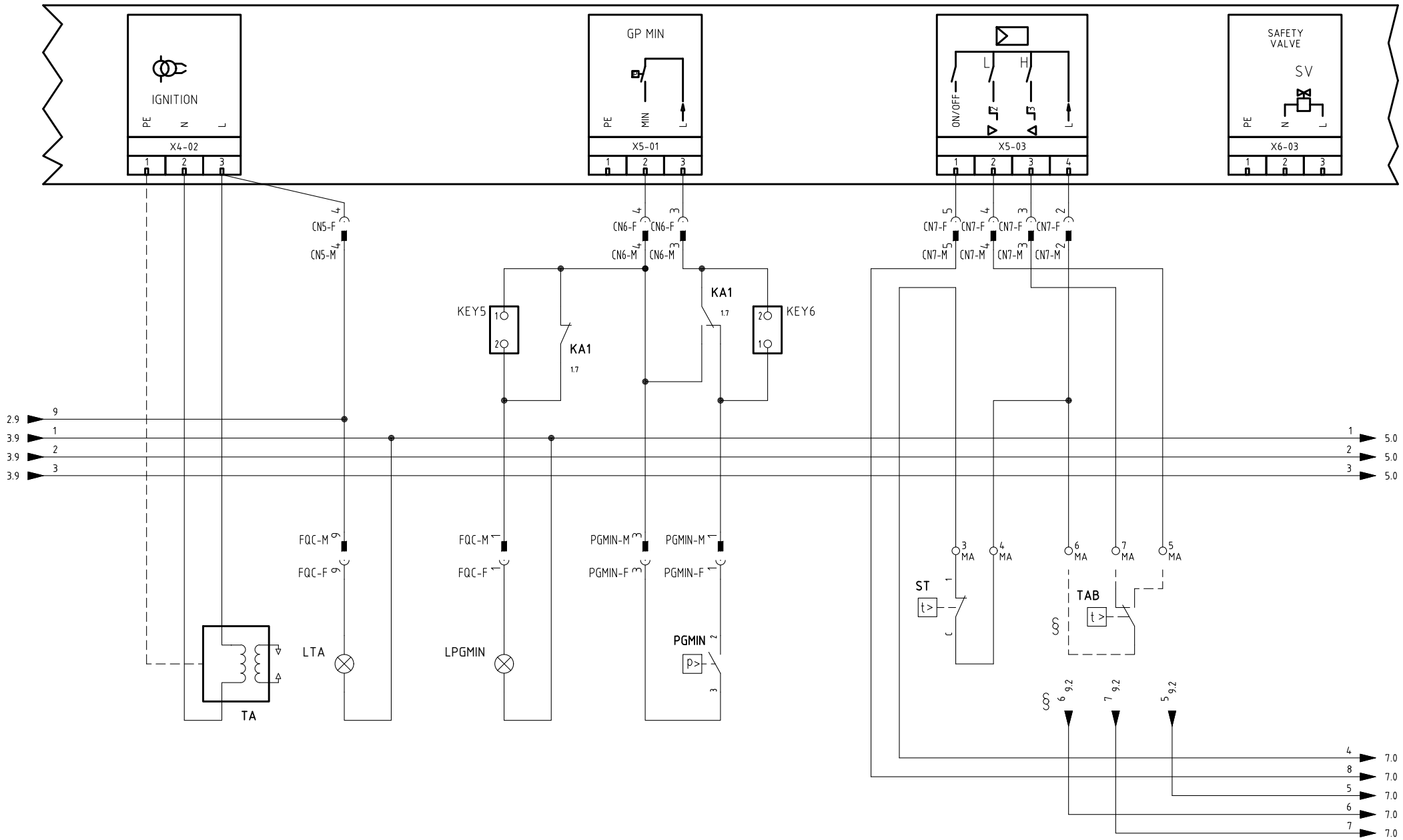

§

VERSIONE (PR) / VERSIONE (MD) CON RWF.. / 600V / KM3

(PR) VERSION / (MD) VERSION WITH RWF.. / 600V / KM3

Data 23/01/2020		PREC. 3	FOGLIO 4
Revisione 00			
Dis. N. 05 – 1258		SEGUE 5	TOTALE 14

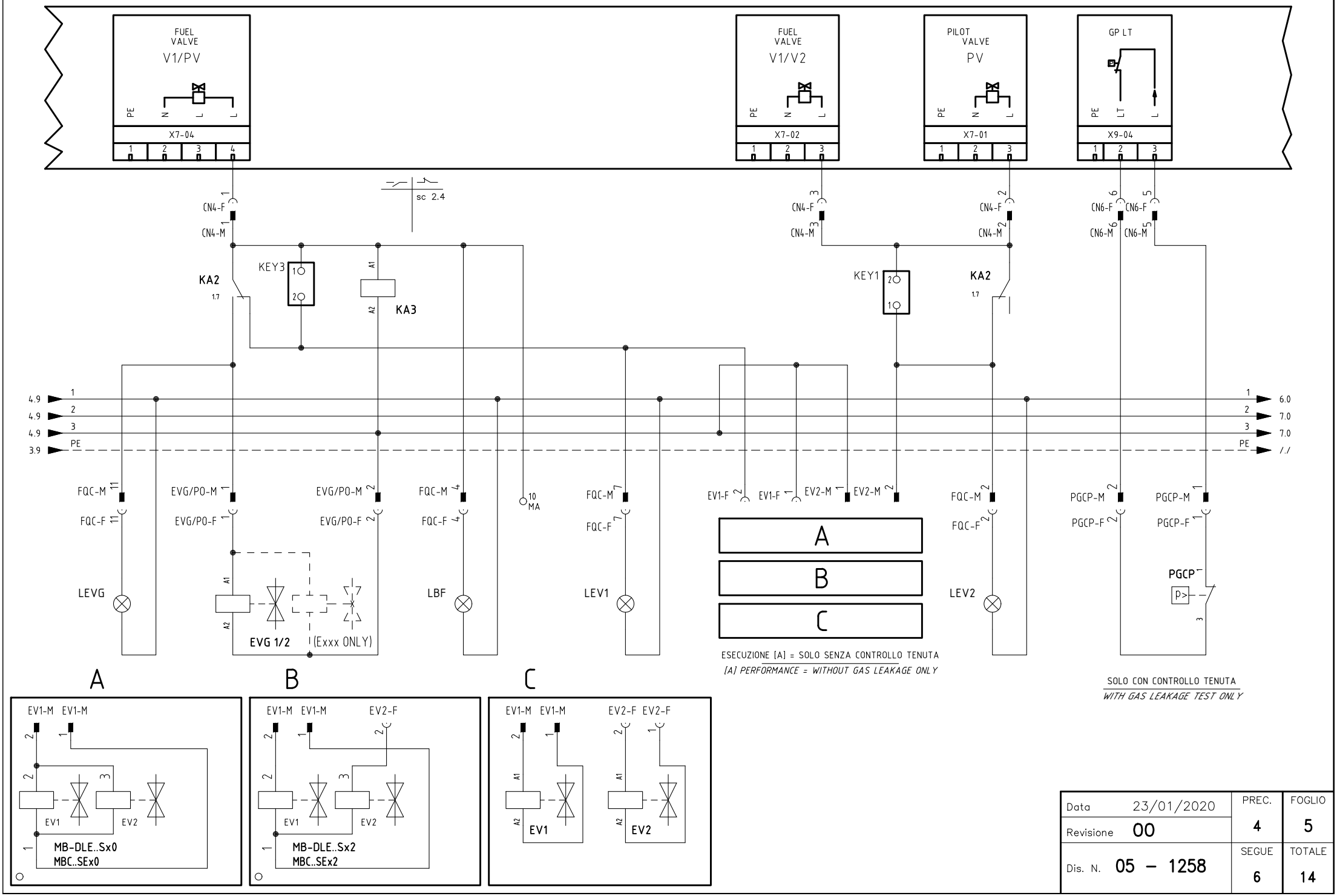

Data 23/01/2020	PREC. 4	FOGLIO 5
Revisione 00		
Dis. N. 05 – 1258	SEGUE 6	TOTALE 14

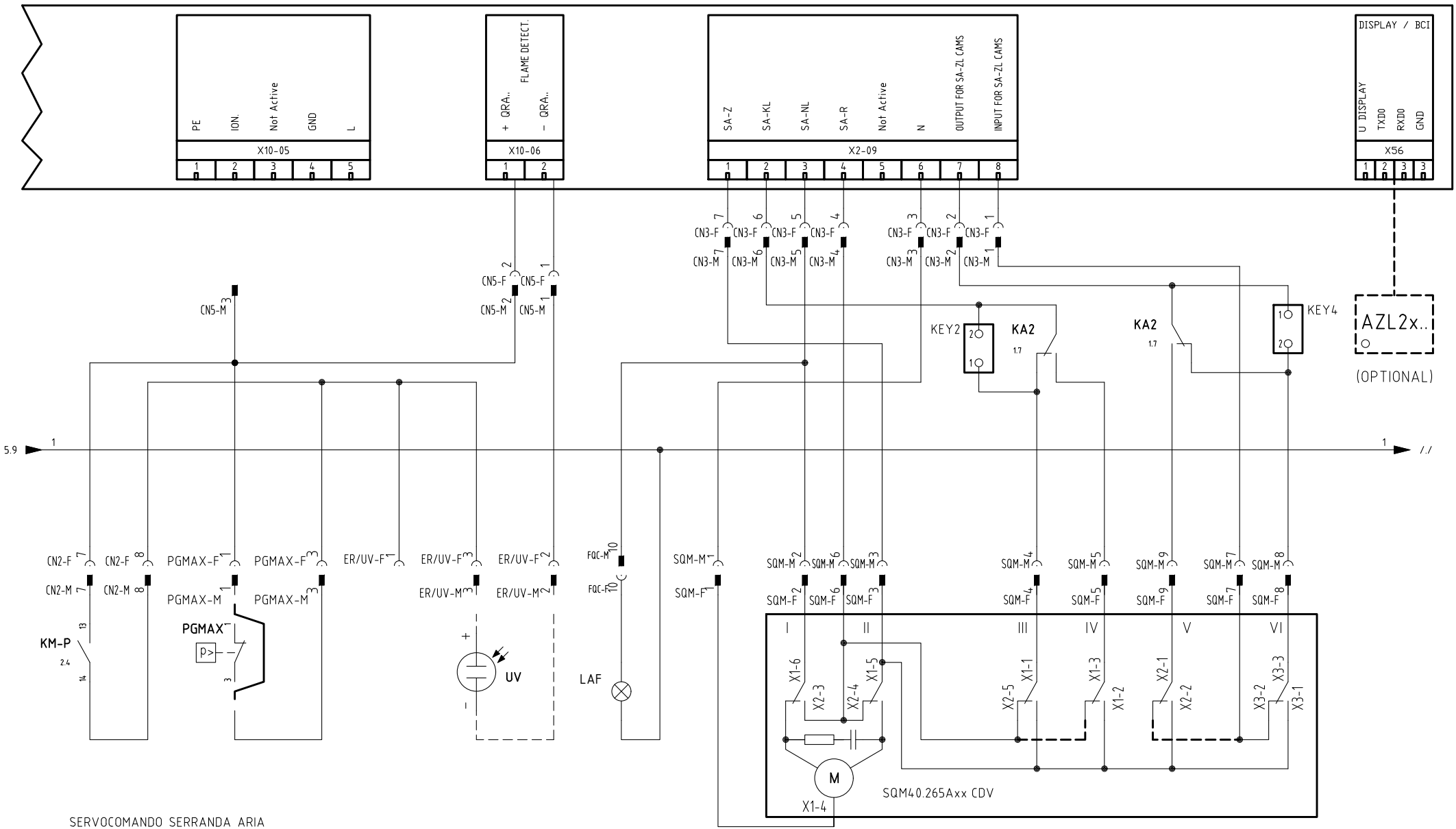

SERVOCOMANDO SERRANDA ARIA

AIR DAMPER ACTUATOR

SQM40.265Axx CDV

I	ALTA FIAMMA *HIGH FLAME*
II	SOSTA *STAND-BY*
III	BASSA FIAMMA GAS *GAS LOW FLAME*
IV	BASSA FIAMMA GASOLIO *LIGHT OIL LOW FLAME*
V	ACCENSIONE GASOLIO *LIGHT OIL IGNITION*
VI	ACCENSIONE GAS *GAS IGNITION*

Data 23/01/2020		PREC. 5	FOGLIO 6
Revisione 00			
Dis. N. 05 – 1258		SEGUE 7	TOTALE 14

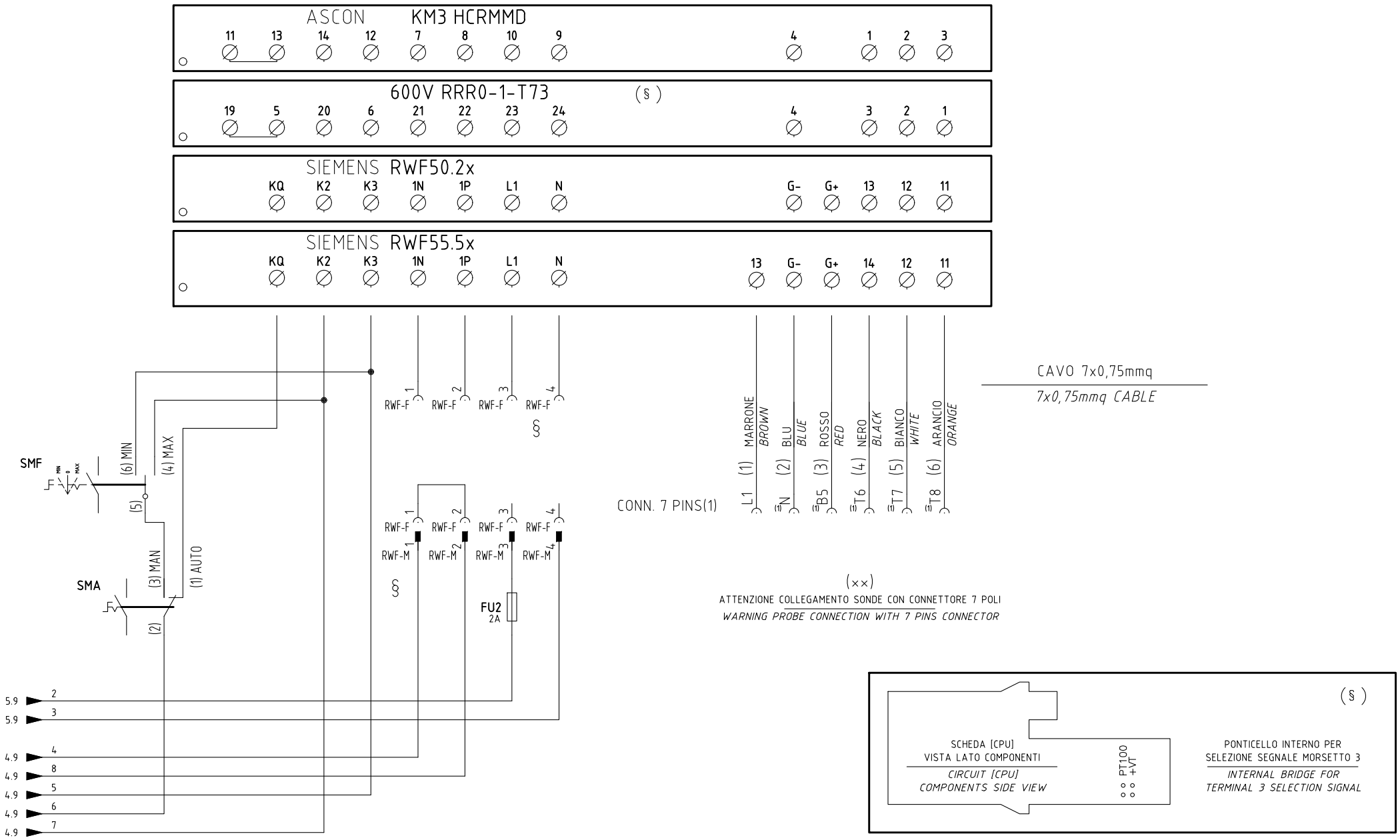

§
VERSIONE (PR) / VERSIONE (MD) CON RWF.. / 600V / KM3
(PR) VERSION / (MD) VERSION WITH RWF.. / 600V / KM3

Data 23/01/2020		PREC. 6	FOGLIO 7
Revisione 00			
Dis. N. 05 – 1258		SEGUE 8	TOTALE 14

(××)
ATTENZIONE COLLEGAMENTO SONDE CON CONNETTORE 7 POLI
WARNING PROBE CONNECTION WITH 7 PINS CONNECTOR

KM3 HCRMMD

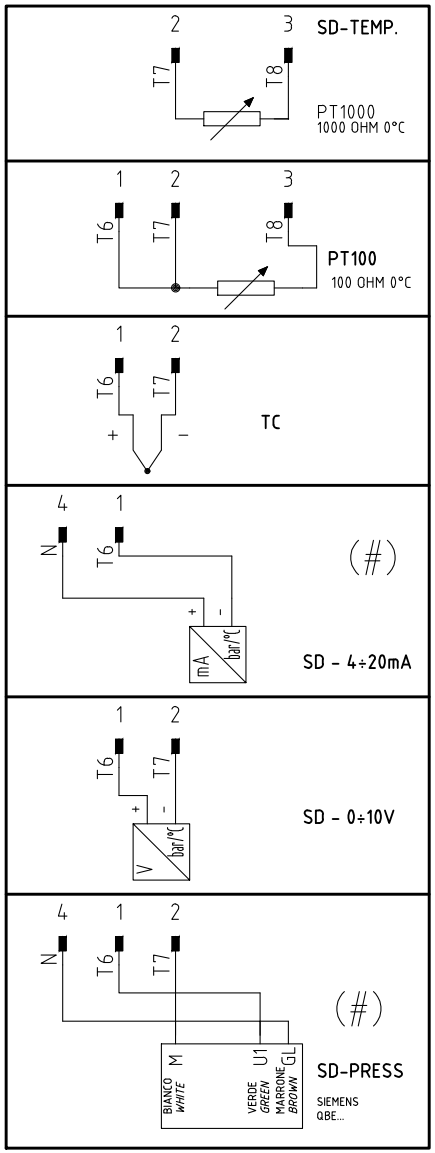

600V RRR0-1-T73

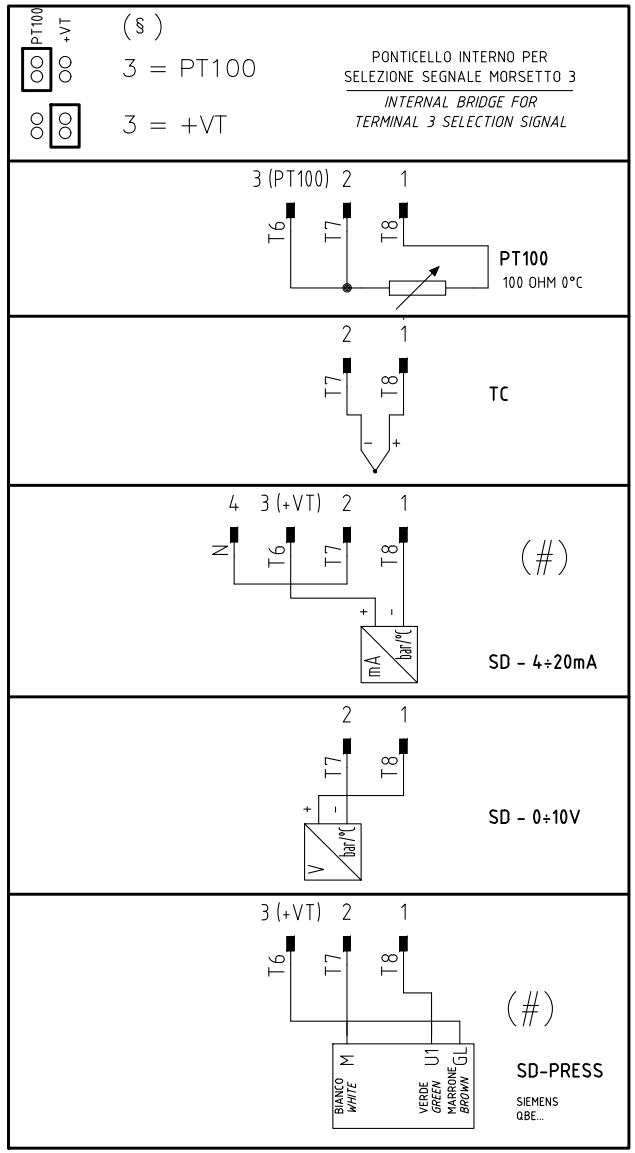

RWF55.5x

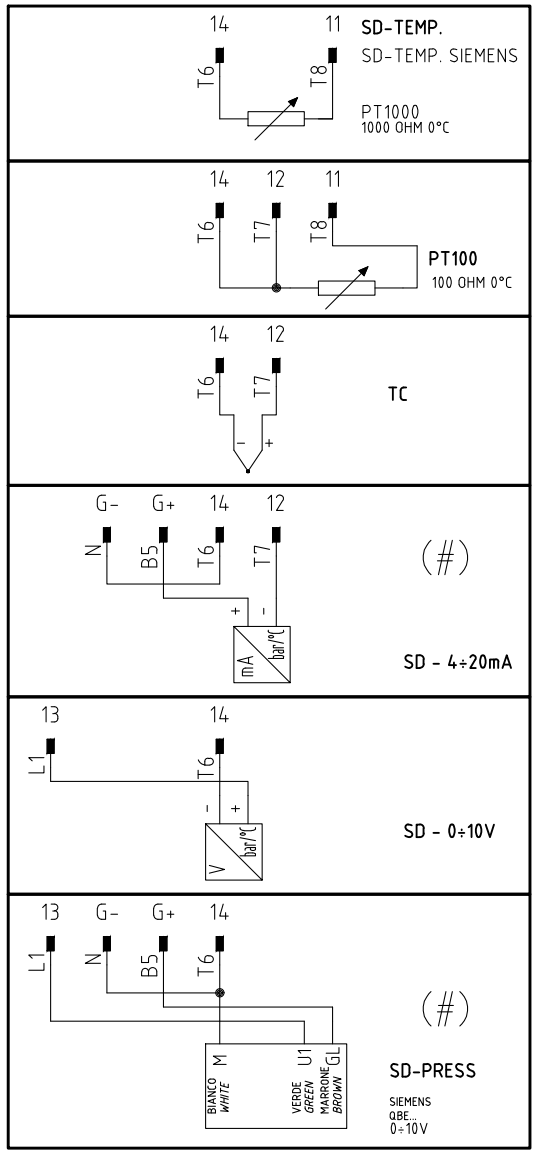

RWF50.2x

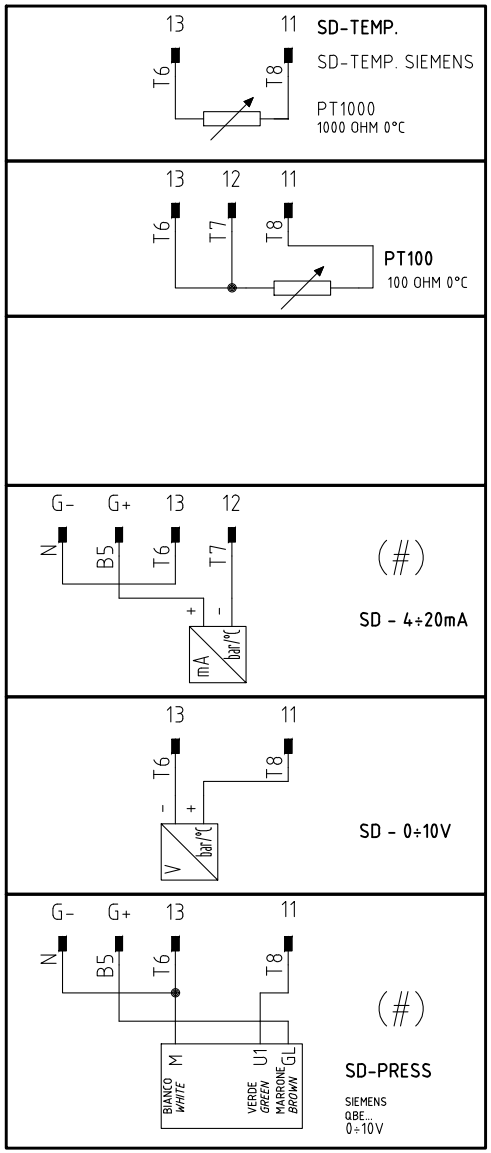

(#)
COLLEGAMENTO SOLO PER
TRASDUTTORI PASSIVI
TRASDUCER PASSIVE
CONNECTION ONLY

Data 23/01/2020		PREC. 7	FOGLIO 8
Revisione 00			
Dis. N. 05 – 1258		SEGUE 9	TOTALE 14

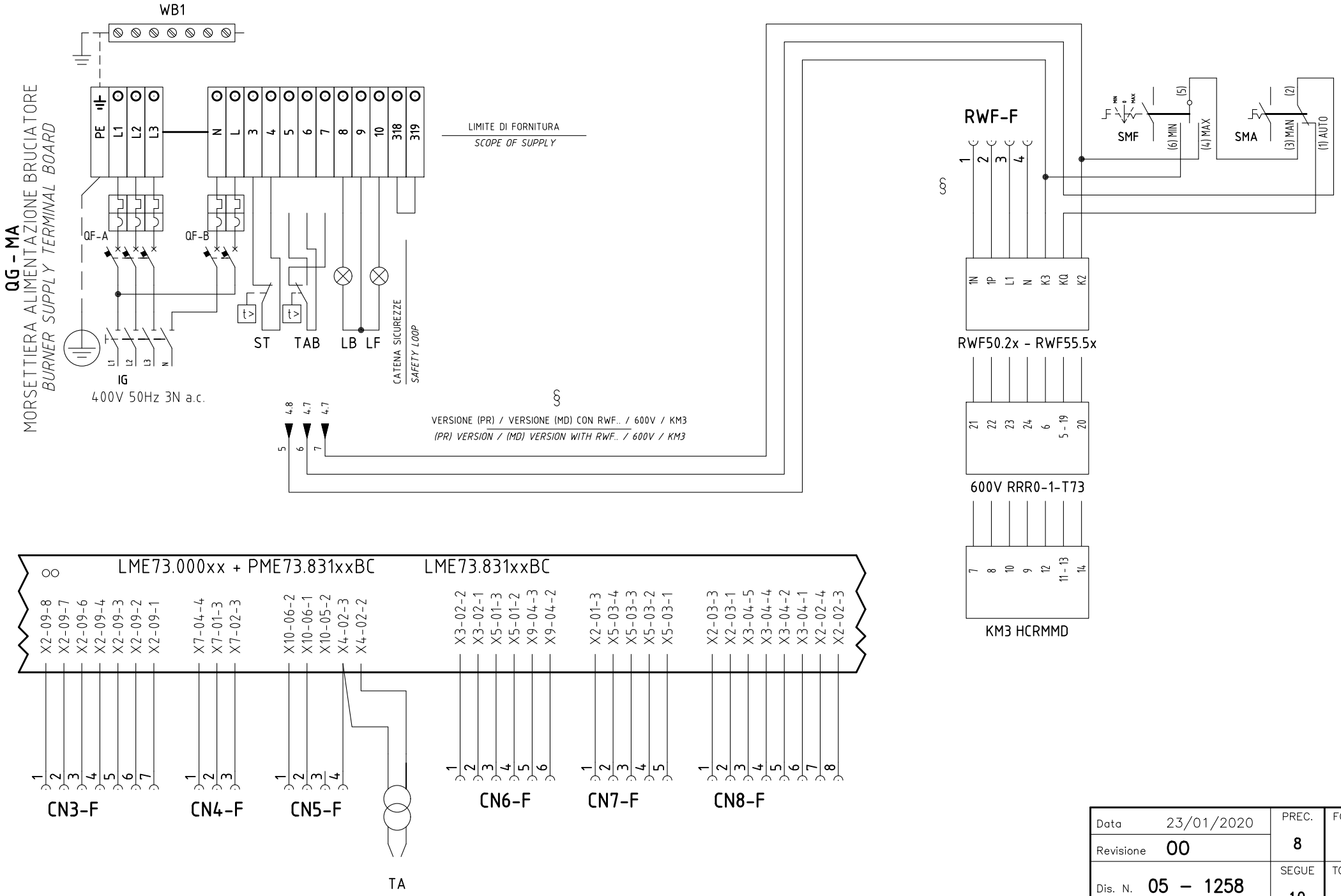

Data 23/01/2020		PREC. 8	FOGLIO 9
Revisione 00			
Dis. N. 05 – 1258		SEGUE 10	TOTALE 14

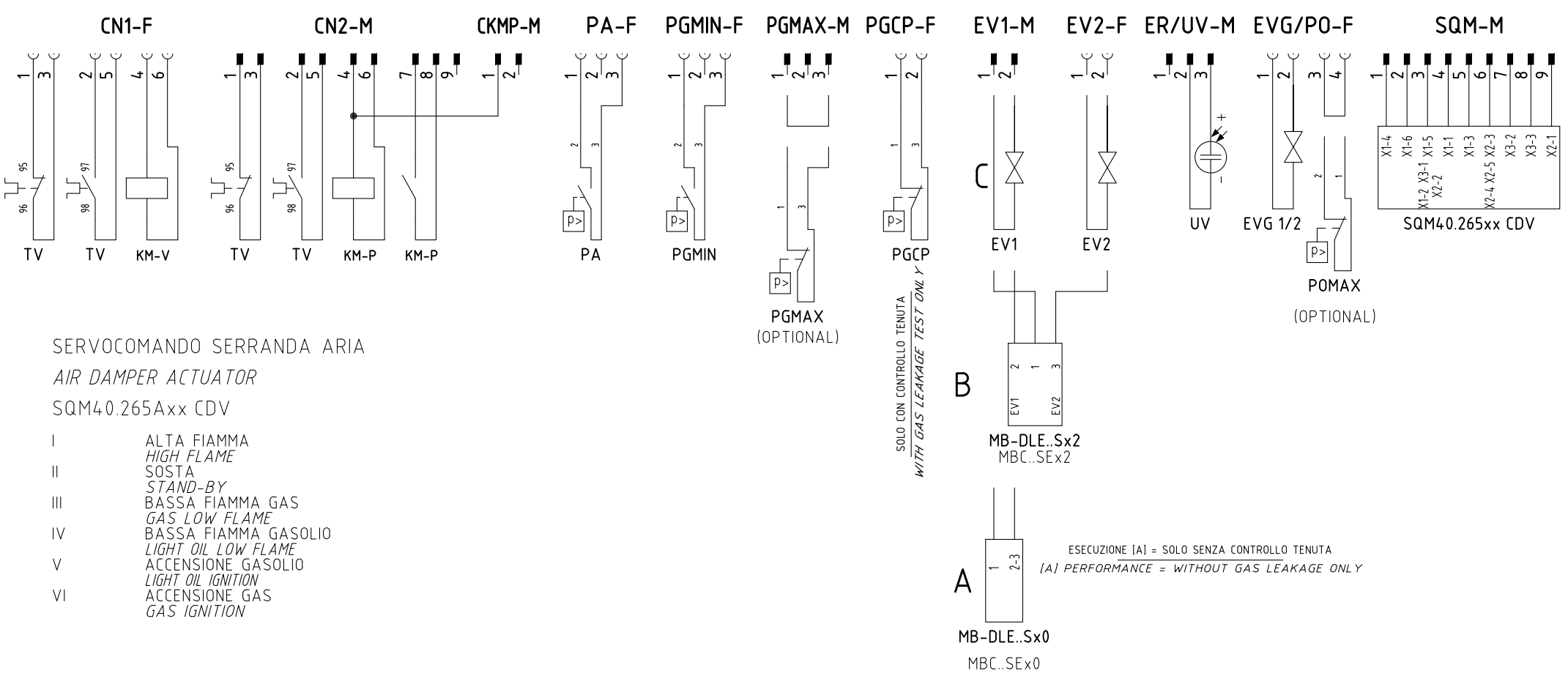

SERVOCOMANDO SERRANDA ARIA

AIR DAMPER ACTUATOR

SQM40.265Axx CDV

I	ALTA FIAMMA *HIGH FLAME*
II	SOSTA *STAND-BY*
III	BASSA FIAMMA GAS *GAS LOW FLAME*
IV	BASSA FIAMMA GASOLIO *LIGHT OIL LOW FLAME*
V	ACCENSIONE GASOLIO *LIGHT OIL IGNITION*
VI	ACCENSIONE GAS *GAS IGNITION*

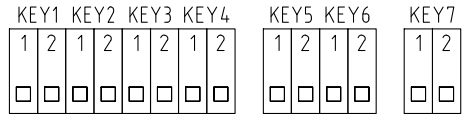

Data 23/01/2020		PREC. 9	FOGLIO 10
Revisione 00			
Dis. N. 05 – 1258		SEGUE 11	TOTALE 14

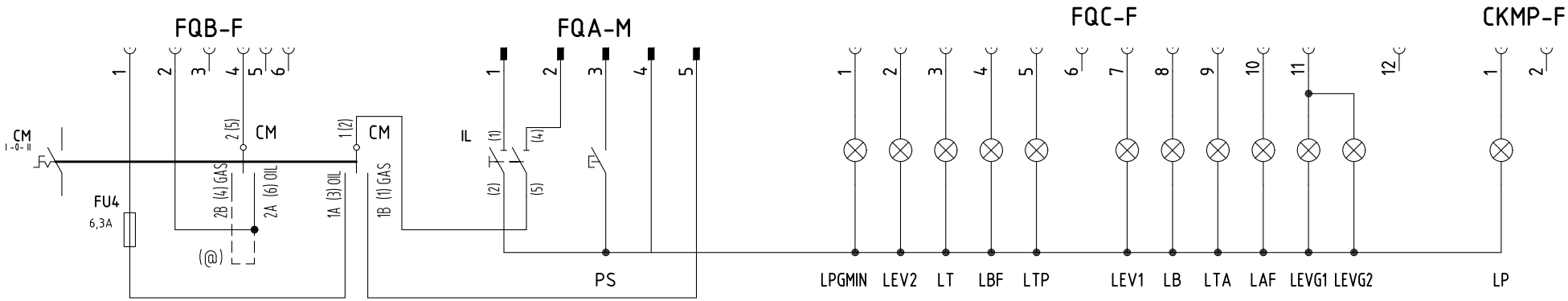

Data 23/01/2020		PREC. 10	FOGLIO 11
Revisione 00			
Dis. N. 05 – 1258		SEGUE 12	TOTALE 14

0	1	2	3	4	5	6	7	8	9

Sigla/Item	Foglio/Sheet	Funzione	Function
600V RRR0−1−T73	7	REGOLATORE MODULANTE (ALTERNATIVO)	BURNER MODULATOR (ALTERNATIVE)
AZL2x..	6	INTERFACCIA UTENTE	USER INTERFACE
CM	1	SELETTORE MANUALE GAS −0− GASOLIO	MANUAL SWITCH GAS −0− LIGHT OIL
EV1	5	ELETTROVALVOLA GAS LATO RETE	UPSTREAM GAS SOLENOID VALVE
EV2	5	ELETTROVALVOLA GAS LATO BRUCIATORE	DOWNSTREAM GAS SOLENOID VALVE
EVG 1/2	5	ELETTROVALVOLE GASOLIO	LIGHT OIL ELECTRO VALVES
FU1	1	FUSIBILE AUSILIARIO	AUXILIARY FUSE
FU2	7	FUSIBILE	FUSE
FU3	1	FUSIBILI LINEA POMPA	PUMP LINE FUSES
FU4	1	FUSIBILE AUSILIARIO	AUXILIARY FUSE
IG	1	INTERRUTTORE GENERALE	MAINS SWITCH
IL	1	INTERRUTTORE LINEA AUSILIARI	AUXILIARY LINE SWITCH
KA1	1	RELE'' AUSILIARIO	AUXILIARY RELAY
KA2	1	RELE'' AUSILIARIO	AUXILIARY RELAY
KA3	5	RELE'' AUSILIARIO	AUXILIARY RELAY
KM3 HCRMMD	7	REGOLATORE MODULANTE (ALTERNATIVO)	BURNER MODULATOR (ALTERNATIVE)
KM−P	2	CONTATTORE MOTORE POMPA GASOLIO	LIGHT OIL PUMP MOTOR CONTACTOR
KM−V	2	CONTATTORE MOTORE VENTILATORE	FAN MOTOR CONTACTOR
LAF	6	LAMPADA SEGNALAZIONE ALTA FIAMMA BRUCIATORE	BURNER IN HIGH FLAME INDICATOR LIGHT
LB	3	LAMPADA SEGNALAZIONE BLOCCO BRUCIATORE	INDICATOR LIGHT FOR BURNER LOCK−OUT
LBF	5	LAMPADA SEGNALAZIONE BASSA FIAMMA BRUCIATORE	BURNER IN LOW FLAME INDICATOR LIGHT
LEV1	5	LAMPADA SEGNALAZIONE APERTURA [EV1]	INDICATOR LIGHT FOR OPENING OF ELECTRO−VALVE [EV1]
LEV2	5	LAMPADA SEGNALAZIONE APERTURA [EV2]	INDICATOR LIGHT FOR OPENING OF ELECTRO−VALVE [EV2]
LEVG	5	LAMPADA SEGNALAZIONE APERTURA [EVG]	INDICATOR LIGHT FOR OPENING OF ELECTRO−VALVE [EVG]
LME73.000xx + PME73.831xxBC	2	APPARECCHIATURA DI COMANDO	CONTROL SCHEME
LME73.831xxBC	2	APPARECCHIATURA DI COMANDO	CONTROL SCHEME
LP	2	LAMPADA SEGNALAZIONE FUNZIONAMENTO POMPA	INDICATOR LIGHT FOR PUMP OPERATION
LPGMIN	4	LAMPADA SEGNALAZIONE PRESENZA GAS IN RETE	INDICATOR LIGHT FOR PRESENCE OF GAS IN THE NETWORK
LT	2	LAMPADA SEGNALAZIONE BLOCCO TERMICO MOTORE VENTILATORE	INDICATOR LIGHT FOR FAN MOTOR OVERLOAD THERMAL CUTOUT
LTA	4	LAMPADA SEGNALAZIONE TRASFORMATORE DI ACCENSIONE	IGNITION TRANSFORMER INDICATOR LIGHT
LTP	2	LAMPADA SEGNALAZIONE BLOCCO TERMICO MOTORE VENTILATORE	INDICATOR LIGHT FOR FAN MOTOR OVERLOAD THERMAL CUTOUT
MB−DLE..Sx0	5	GRUPPO VALVOLE GAS	GAS VALVES GROUP

Data 23/01/2020		PREC.	FOGLIO
Revisione 00		11	12
Dis. N. 05 − 1258		SEGUE	TOTALE
		13	14

0	1	2	3	4	5	6	7	8	9

Sigla/Item	Foglio/Sheet	Funzione	Function
MB–DLE..Sx2	5	GRUPPO VALVOLE GAS	GAS VALVES GROUP
MBC..SEx0	5	GRUPPO VALVOLE GAS (ALTERNATIVO)	GAS VALVES GROUP (ALTERNATIVE)
MBC..SEx2	5	GRUPPO VALVOLE GAS (ALTERNATIVO)	GAS VALVES GROUP (ALTERNATIVE)
MP	1	MOTORE POMPA GASOLIO	LIGHT OIL PUMP MOTOR
MV	1	MOTORE VENTILATORE	FAN MOTOR
PA	3	PRESSOSTATO ARIA	AIR PRESSURE SWITCH
PGCP	5	PRESSOSTATO GAS CONTROLLO PERDITE	GAS LEAKAGE PRESSURE SWITCH
PGMAX	6	PRESSOSTATO GAS DI MASSIMA PRESSIONE (OPTIONAL)	MAXIMUM PRESSURE GAS SWITCH (OPTIONAL)
PGMIN	4	PRESSOSTATO GAS DI MINIMA PRESSIONE	MINIMUM GAS PRESSURE SWITCH
POMAX	3	PRESSOSTATO DI MASSIMA PRESSIONE OLIO (OPTIONAL)	MAXIMUM OIL PRESSURE SWITCH (OPTIONAL)
PS	3	PULSANTE SBLOCCO FIAMMA	FLAME UNLOCK BUTTON
PT100	8	SONDA DI TEMPERATURA	TEMPERATURE PROBE
QF–A	1	MAGNETOTERMICO PROTEZIONE ALIMENTAZIONE TRIFASE	THREE–PHASE POWER CIRCUIT BREAKER PROTECTION
QF–B	1	MAGNETOTERMICO PROTEZIONE LINEA AUSILIARI	AUXILIARY SUPPLY CIRCUIT BREAKER PROTECTION
RWF50.2x	7	REGOLATORE MODULANTE (ALTERNATIVO)	BURNER MODULATOR (ALTERNATIVE)
RWF55.5x	7	REGOLATORE MODULANTE (ALTERNATIVO)	BURNER MODULATOR (ALTERNATIVE)
SD–PRESS	8	SONDA DI PRESSIONE	PRESSURE PROBE
SD–TEMP.	8	SONDA DI TEMPERATURA	TEMPERATURE PROBE
SD – 0÷10V	8	TRASDUTTORE USCITA IN TENSIONE	TRANSDUCER VOLTAGE OUTPUT
SD – 4÷20mA	8	TRASDUTTORE USCITA IN CORRENTE	TRANSDUCER CURRENT OUTPUT
SMA	7	SELETTORE MANUALE/AUTOMATICO	MANUAL/AUTOMATIC SWITCH
SMF	7	SELETTORE MANUALE FUNZIONAMENTO MIN–0–MAX	MIN–0–MAX MANUAL OPERATION SWITCH
SQM40.265Axx CDV	6	SERVOCOMANDO SERRANDA ARIA	AIR DAMPER ACTUATOR
ST	4	SERIE TERMOSTATI/PRESSOSTATI	SERIES OF THERMOSTATS OR PRESSURE SWITCHES
TA	4	TRASFORMATORE DI ACCENSIONE	IGNITION TRANSFORMER
TAB	4	TERMOSTATO/PRESSOSTATO ALTA–BASSA FIAMMA	HIGH–LOW THERMOSTAT/PRESSURE SWITCHES
TC	8	TERMOCOPPIA	THERMOCOUPLE
TP	1	TERMICO MOTORE POMPA	PUMP MOTOR THERMAL
TV	1	TERMICO MOTORE VENTILATORE	FAN MOTOR THERMAL
UV	6	SONDA UV RILEVAZIONE FIAMMA	UV FLAME DETECTOR
WB1	1	BARRA DI TERRA	EARTH TERMINAL

Data 23/01/2020		PREC. 12	FOGLIO 13
Revisione 00			
Dis. N. 05 – 1258		SEGUE 14	TOTALE 14

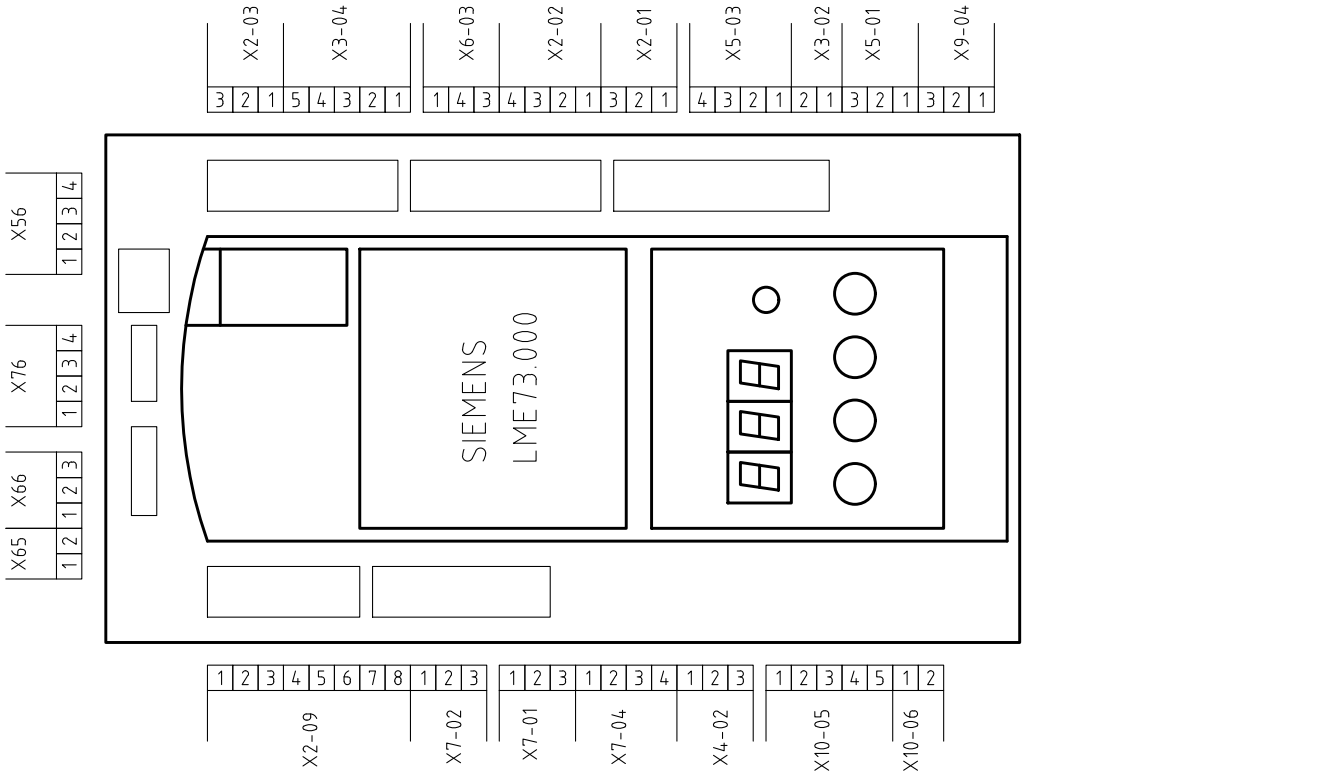

VISTA LATO COMPONENTI

COMPONENTS SIDE VIEW

CKMP

1 2

BIANCO *WHITE*

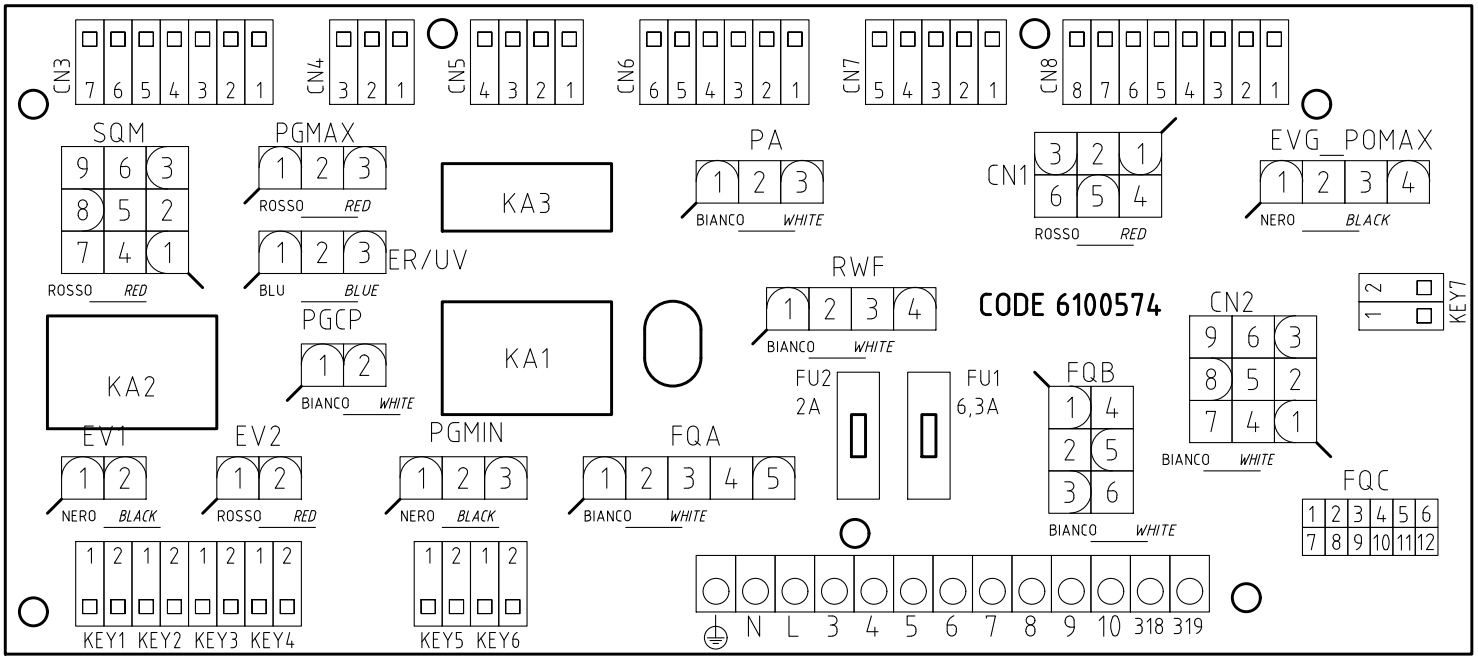

Data 23/01/2020		PREC.	FOGLIO
Revisione 00		13	14
Dis. N. 05 – 1258		SEGUE	TOTALE
		/	14