LG/NG/NGX280
LG/NG/NGX350
LG/NG/NGX400

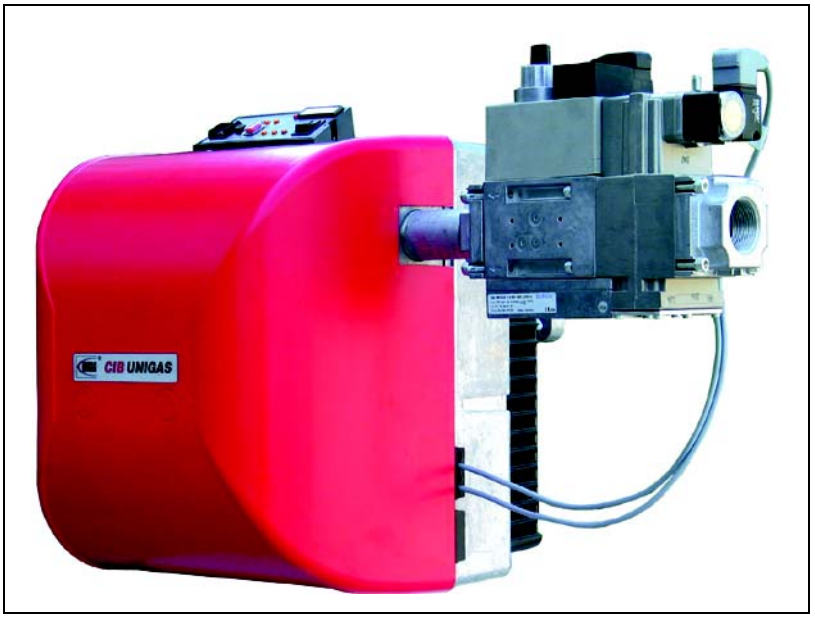

IDEA Series
Gas burners

MANUAL OF INSTALLATION - USE - MAINTENANCE

CIB UNIGAS

BURNERS - BRUCIATORI - BRULERS - BRENNER - QUEMADORES - ГОРЕЛКИ

M039132CE Rev. 3.2 03/2024

DANGERS, WARNINGS AND NOTES OF CAUTION

THIS MANUAL IS SUPPLIED AS AN INTEGRAL AND ESSENTIAL PART OF THE PRODUCT AND MUST BE DELIVERED TO THE USER.

INFORMATION INCLUDED IN THIS SECTION ARE DEDICATED BOTH TO THE USER AND TO PERSONNEL FOLLOWING PRODUCT INSTALLATION AND MAINTENANCE.

THE USER WILL FIND FURTHER INFORMATION ABOUT OPERATING AND USE RESTRICTIONS, IN THE SECOND SECTION OF THIS MANUAL. WE HIGHLY RECOMMEND TO READ IT.

CAREFULLY KEEP THIS MANUAL FOR FUTURE REFERENCE.

1) GENERAL INTRODUCTION

- The equipment must be installed in compliance with the regulations in force, following the manufacturer's instructions, by qualified personnel.
- Qualified personnel means those having technical knowledge in the field of components for civil or industrial heating systems, sanitary hot water generation and particularly service centres authorised by the manufacturer.
- Improper installation may cause injury to people and animals, or damage to property, for which the manufacturer cannot be held liable.
- Remove all packaging material and inspect the equipment for integrity.

In case of any doubt, do not use the unit - contact the supplier.

The packaging materials (wooden crate, nails, fastening devices, plastic bags, foamed polystyrene, etc), should not be left within the reach of children, as they may prove harmful.

- Before any cleaning or servicing operation, disconnect the unit from the mains by turning the master switch OFF, and/or through the cut-out devices that are provided.
- Make sure that inlet or exhaust grilles are unobstructed.
- In case of breakdown and/or defective unit operation, disconnect the unit. Make no attempt to repair the unit or take any direct action.

Contact qualified personnel only.

Units shall be repaired exclusively by a servicing centre, duly authorised by the manufacturer, with original spare parts and accessories.

Failure to comply with the above instructions is likely to impair the unit's safety.

To ensure equipment efficiency and proper operation, it is essential that maintenance operations are performed by qualified personnel at regular intervals, following the manufacturer's instructions.

- When a decision is made to discontinue the use of the equipment, those parts likely to constitute sources of danger shall be made harmless.
- In case the equipment is to be sold or transferred to another user, or in case the original user should move and leave the unit behind, make sure that these instructions accompany the equipment at all times so that they can be consulted by the new owner and/or the installer.
- This unit shall be employed exclusively for the use for which it is meant. Any other use shall be considered as improper and, therefore, dangerous.

The manufacturer shall not be held liable, by agreement or otherwise, for damages resulting from improper installation, use and failure to comply with the instructions supplied by the manufacturer.The occurrence of any of the following circustances may cause explosions, polluting unburnt gases (example: carbon monoxide CO), burns, serious harm to people, animals and things:

- Failure to comply with one of the WARNINGS in this chapter
- Incorrect handling, installation, adjustment or maintenance of the burner
- Incorrect use of the burner or incorrect use of its parts or optional supply

2) SPECIAL INSTRUCTIONS FOR BURNERS

- The burner should be installed in a suitable room, with ventilation openings complying with the requirements of the regulations in force, and sufficient for good combustion.
- Only burners designed according to the regulations in force should be used.
- This burner should be employed exclusively for the use for which it was designed.
- Before connecting the burner, make sure that the unit rating is the same as delivery mains (electricity, gas oil, or other fuel).
- Observe caution with hot burner components. These are, usually, near to the flame and the fuel pre-heating system, they become hot during the unit operation and will remain hot for some time after the burner has stopped.

When the decision is made to discontinue the use of the burner, the user shall have qualified personnel carry out the following operations:

a Remove the power supply by disconnecting the power cord from the mains.

b Disconnect the fuel supply by means of the hand-operated shut-off valve and remove the control handwheels from their spindles.

Special warnings

- Make sure that the burner has, on installation, been firmly secured to the appliance, so that the flame is generated inside the appliance fire-box.
- Before the burner is started and, thereafter, at least once a year, have qualified personnel perform the following operations:

a set the burner fuel flow rate depending on the heat input of the appliance;

b set the flow rate of the combustion-supporting air to obtain a combustion efficiency level at least equal to the lower level required by the regulations in force;

c check the unit operation for proper combustion, to avoid any harmful or polluting unburnt gases in excess of the limits permitted by the regulations in force;

d make sure that control and safety devices are operating properly;

e make sure that exhaust ducts intended to discharge the products of combustion are operating properly;

f on completion of setting and adjustment operations, make sure that all mechanical locking devices of controls have been duly tightened;

g make sure that a copy of the burner use and maintenance instructions is available in the boiler room.

- In case of a burner shut-down, reser the control box by means of the RESET pushbutton. If a second shut-down takes place, call the Technical Service, **without trying to RESET further**.
- The unit shall be operated and serviced by qualified personnel only, in compliance with the regulations in force.

3) GENERAL INSTRUCTIONS DEPENDING ON FUEL USED

3a) ELECTRICAL CONNECTION

- For safety reasons the unit must be efficiently earthed and installed as required by current safety regulations.
- It is vital that all saftey requirements are met. In case of any doubt, ask for an accurate inspection of electrics by qualified personnel, since the manufacturer cannot be held liable for damages that may be caused by failure to correctly earth the equipment.
- Qualified personnel must inspect the system to make sure that it is adequate to take the maximum power used by the equipment shown on the equipment rating plate. In particular, make sure that the system cable cross section is adequate for the power absorbed by the unit.
- No adaptors, multiple outlet sockets and/or extension cables are permitted to connect the unit to the electric mains.
- An omnipolar switch shall be provided for connection to mains, as required by the current safety regulations.
- The use of any power-operated component implies observance of a few basic rules, for example:
  -do not touch the unit with wet or damp parts of the body and/or with bare feet;
  - do not pull electric cables;
  - do not leave the equipment exposed to weather (rain, sun, etc.) unless expressly required to do so;
  - do not allow children or inexperienced persons to use equipment;
- The unit input cable shall not be replaced by the user.
  In case of damage to the cable, switch off the unit and contact qualified personnel to replace.
  When the unit is out of use for some time the electric switch supplying all the power-driven components in the system (i.e. pumps, burner, etc.) should be switched off.

3b) FIRING WITH GAS, LIGHT OIL OR OTHER FUELS

GENERAL

- The burner shall be installed by qualified personnel and in compliance with regulations and provisions in force; wrong installation can cause injuries to people and animals, or damage to property, for which the manufacturer cannot be held liable.
- Before installation, it is recommended that all the fuel supply system pipes be carefully cleaned inside, to remove foreign matter that might impair the burner operation.
- Before the burner is commissioned, qualified personnel should inspect the following:

a the fuel supply system, for proper sealing;
b the fuel flow rate, to make sure that it has been set based on the firing rate required of the burner;
c the burner firing system, to make sure that it is supplied for the designed fuel type;
d the fuel supply pressure, to make sure that it is included in the range shown on the rating plate;
e the fuel supply system, to make sure that the system dimensions are adequate to the burner firing rate, and that the system is equipped with all the safety and control devices required by the regulations in force.

- When the burner is to remain idle for some time, the fuel supply tap or taps should be closed.

SPECIAL INSTRUCTIONS FOR USING GAS

Have qualified personnel inspect the installation to ensure that:

a the gas delivery line and train are in compliance with the regulations and provisions in force;
b all gas connections are tight;
c the boiler room ventilation openings are such that they ensure the air supply flow required by the current regulations, and in any case are sufficient for proper combustion.

- Do not use gas pipes to earth electrical equipment.
- Never leave the burner connected when not in use. Always shut the gas valve off.
- In case of prolonged absence of the user, the main gas delivery valve to the burner should be shut off.

Precautions if you can smell gas

a do not operate electric switches, the telephone, or any other item likely to generate sparks;
b immediately open doors and windows to create an air flow to purge the room;
c close the gas valves;
d contact qualified personnel.

- Do not obstruct the ventilation openings of the room where gas appliances are installed, to avoid dangerous conditions such as the development of toxic or explosive mixtures.

DIRECTIVES AND STANDARDS

Gas burners

European directives

-Regulation 2016/426/UE (appliances burning gaseous fuels)
-2014/35/UE (Low Tension Directive)
-2014/30/UE (Electromagnetic compatibility Directive)
-2006/42/EC (Machinery Directive)

Harmonized standards

-UNI EN 676 (Automatic forced draught burners for gaseous fuels)
-EN 55014-1 (Electromagnetic compatibility- Requirements for house hold appliances, electric tools and similar apparatus)
-EN 60204-1:2006 (Safety of machinery – Electrical equipment of machines.)
-CEI EN 60335-1 (Specification for safety of household and similar electrical appliances);
-CEI EN 60335-2-102 (Household and similar electrical appliances. Safety. Particular requirements for gas, oil and solid-fuel burning appliances having electrical connections).
-UNI EN ISO 12100:2010 (Safety of machinery - General principles for design - Risk assessment and risk reduction);

Light oil burners

European directives

-2014/35/UE (Low Tension Directive)
-2014/30/UE (Electromagnetic compatibility Directive)
-2006/42/EC (Machinery Directive)

Harmonized standards

-UNI EN 267-2011(Automatic forced draught burners for liquid fuels)
-EN 55014-1 (Electromagnetic compatibility- Requirements for house hold appliances, electric tools and similar apparatus)
-EN 60204-1:2006 (Safety of machinery – Electrical equipment of machines.)
-CEI EN 60335-1 (Specification for safety of household and similar electrical appliances);
-CEI EN 60335-2-102 (Household and similar electrical appliances. Safety. Particular requirements for gas, oil and solid-fuel burning appliances having electrical connections).
-UNI EN ISO 12100:2010 (Safety of machinery - General principles for design - Risk assessment and risk reduction);

Heavy oil burners

European Directives

-2014/35/UE (Low Tension Directive)
-2014/30/UE (Electromagnetic compatibility Directive)
-2006/42/EC (Machinery Directive)

Harmonized standards

-UNI EN 267(Automatic forced draught burners for liquid fuels)
-EN 55014-1 (Electromagnetic compatibility- Requirements for house hold appliances, electric tools and similar apparatus)
-EN 60204-1:2006 (Safety of machinery – Electrical equipment of machines.)
-CEI EN 60335-1 (Specification for safety of household and similar electrical appliances);
-CEI EN 60335-2-102 (Household and similar electrical appliances. Safety. Particular requirements for gas, oil and solid-fuel burning appliances having electrical connections).
-UNI EN ISO 12100:2010 (Safety of machinery - General principles for design - Risk assessment and risk reduction);

Gas - Light oil burners

European Directives

-Regulation 2016/426/UE (appliances burning gaseous fuels)
-2014/35/UE (Low Tension Directive)
-2014/30/UE (Electromagnetic compatibility Directive)
-2006/42/EC (Machinery Directive)

Harmonized standards

-UNI EN 676 (Automatic forced draught burners for gaseous fuels)
-UNI EN 267(Automatic forced draught burners for liquid fuels)
-EN 55014-1 (Electromagnetic compatibility- Requirements for house hold appliances, electric tools and similar apparatus)
-EN 60204-1:2006 (Safety of machinery – Electrical equipment of machines.)
-CEI EN 60335-1 (Specification for safety of household and similar electrical appliances);
-CEI EN 60335-2-102 (Household and similar electrical appliances. Safety. Particular requirements for gas, oil and solid-fuel burning appliances having electrical connections).
-UNI EN ISO 12100:2010 (Safety of machinery - General principles for design - Risk assessment and risk reduction);

Gas - Heavy oil burners

European directives:

-Regulation 2016/426/UE (appliances burning gaseous fuels)
-2014/35/UE (Low Tension Directive)
-2014/30/UE (Electromagnetic compatibility Directive)
-2006/42/EC (Machinery Directive)

Harmonized standards

-UNI EN 676 (Automatic forced draught burners for gaseous fuels)
-EN 55014-1 (Electromagnetic compatibility- Requirements for house hold appliances, electric tools and similar apparatus)
-EN 60204-1:2006 (Safety of machinery – Electrical equipment of machines.)
-CEI EN 60335-1 (Specification for safety of household and similar electrical appliances);
-CEI EN 60335-2-102 (Household and similar electrical appliances. Safety. Particular requirements for gas, oil and solid-fuel burning appliances having electrical connections).
-UNI EN ISO 12100:2010 (Safety of machinery - General principles for design - Risk assessment and risk reduction);

Industrial burners

European directives

-Regulation 2016/426/UE (appliances burning gaseous fuels)
-2014/35/UE (Low Tension Directive)
-2014/30/UE (Electromagnetic compatibility Directive)
-2006/42/EC (Machinery Directive)

Harmonized standards

-EN 55014-1 (Electromagnetic compatibility- Requirements for house hold appliances, electric tools and similar apparatus)
-EN 746-2 (Industrial thermoprocessing equipment - Part 2: Safety requirements for combustion and fuel handling systems)
-UNI EN ISO 12100:2010 (Safety of machinery - General principles for design - Risk assessment and risk reduction);
-EN 60204-1:2006 (Safety of machinery – Electrical equipment of machines.)
-EN 60335-2 (Electrical equipment of non-electric appliances for household and similar purposes. Safety requirements)

Burner data plate

For the following information, please refer to the data plate:

- burner type and burner model: must be reported in any communication with the supplier
- burner ID (serial number): must be reported in any communication with the supplier
- date of production (year and month)
- information about fuel type and network pressure

Type	--
Model	--
Year	--
S.Number	--
Output	--
Oil Flow	--
Fuel	--
Category	--
Gas Pressure	--
Viscosity	--
El.Supply	--
El.Consump.	--
Fan Motor	--
Protection	--
Drwaing n°	--
P.I.N.	--

SYMBOLS USED

WARNING! Failure to observe the warning may result in irreparable damage to the unit or damage to the environment

DANGER! Failure to observe the warning may result in serious injuries or death.

WARNING! Failure to observe the warning may result in electric shock with lethal consequences

Figures, illustrations and images used in this manual may differ in appearance from the actual product.

BURNER SAFETY

The burners - and the configurations described below - comply with the regulations in force regarding health, safety and the environment. For more in-depth information, refer to the declarations of conformity that are an integral part of this Manual.

DANGER! Incorrect motor rotation can seriously damage property and injure people.

Residual risks deriving from misuse and prohibitions

The burner has been built in order to make its operation safe; there are, however, residual risks.

Do not touch any mechanical moving parts with your hands or any other part of your body. Injury hazard
Do not touch any parts containing fuel (i.e. tank and pipes). Scalding hazard
Do not use the burner in situations other than the ones provided for in the data plate.
Do not use fuels other than the ones stated.
Do not use the burner in potentially explosive environments.
Do not remove or by-pass any machine safety devices.
Do not remove any protection devices or open the burner or any other component while the burner is running.
Do not disconnect any part of the burner or its components while the burner is running.
Untrained staff must not modify any linkages.

After any maintenance, it is important to restore the protection devices before restarting the machine.
All safety devices must be kept in perfect working order.
Personnel authorized to maintain the machine must always be provided with suitable protections.

ATTENTION: while running, the parts of the burner near the generator (coupling flange) are subject to overheating. Where necessary, avoid any contact risks by wearing suitable PPE.

PART I: SPECIFICATIONS

GENERAL FEATURES

These burners are characterised by high performaces and width in the performance curves, when the pressure in the combustion chamber is high. They are also characterised for other important functional features: there are plugs which can be easily connected to the boiler and to the detecting probes, a pressure plug in the combustion chamber, all mechanical components are mounted on a plate which can be quickly taken off for maintenance. The head is adjustable through a graduated screw. The gas train can be mounted either on the right side or on the left side.

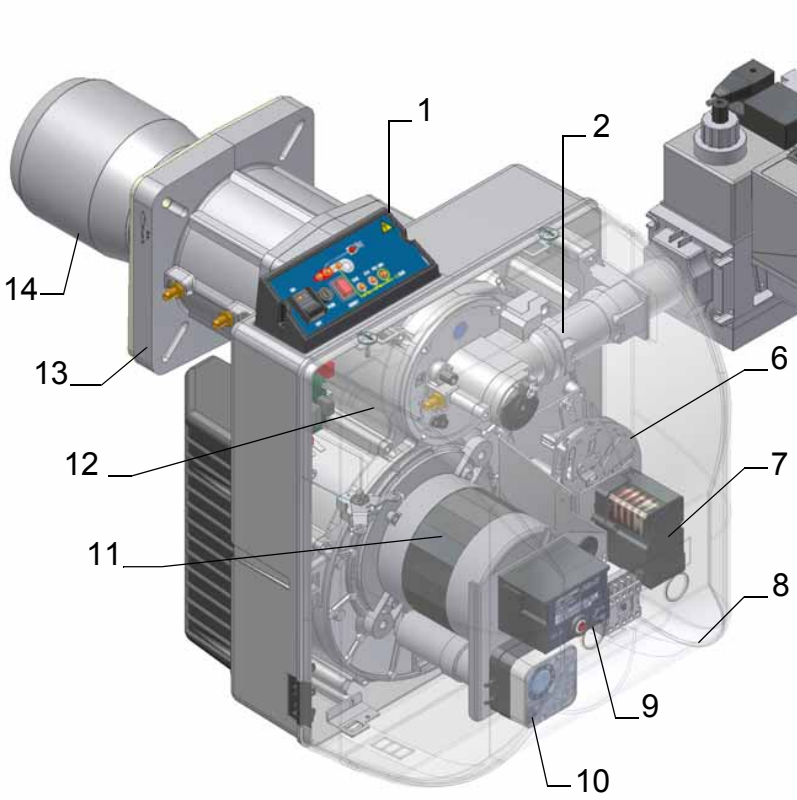

1 Control panel with startup switch
2 Gas train
3 Gas filter
4 Gas valves group
5 Gas proving system
6 Adjusting cam (double-stage, progressive and fully modulating burners)
7 Servocontrol (double-stage, progressive and fully modulating burners)
8 Cover
9 Control box
10 Air pressure switch
11 Fan motor
12 Combustion head (inside)
13 Flange

The gas coming from the supply line, passes through the valves group provided with filter and stabiliser. This one forces the pressure in the utilisation limits. In the double-stage , progressive and fully- modulating burners, the electric servocontrol (7), that moves proportionally the air damper and the gas butterfly valve, uses an adjusting cam with variable shape. This one allows the optimisation of the gas flue values, as to get an efficient combustion. The combustion head positioning determines the burner's output. The combustion head (1) determines the energetic quality and the geometry of the flame. Fuel and comburent are routed into separated ways as far as the zone of flame generation (combustion chamber). The air (comburent) and fuel (gas, gas oil, heavy oil) are forced into the combustion chamber. The control panel, placed on the burner's front side, shows each operating stage.

Burners are identified by burner type and model.

Burner model identification is described as follows.

Type **NG400** Model	**M-.**	**PR.**	**S.**	*****	**A.**	**0.**	**50**
(1)	(2)	(3)	(4)	(5)	(6)	(7)	(8)

(1)	BURNER TYPE	NG - Natural gas burner, Brûleur du gaz naturel LG - L.P.G. burner, NGX - Low NOx burners
(2)	FUEL	M - Natural gas, L - LPG Biogas
(3)	OPERATION (Available versions)	TN - Single stage, AB - Double stagePR - Progressive, MD - Fully modulating
(4)	BLAST TUBE	S - Standard, L - extended Longue modular
(5)	DESTINATION COUNTRY	* see data plate
(6)	BURNER VERSION	A - Standard, Y - Special
(7)	EQUIPMENT	0 = 2 gas valves 1= 2 Gas valves + gas proving system (optional) 7 = 2 gas valves + maximum gas pressure switch
(8)	GAS CONNECTION	25 = Rp1, 32 = Rp1$_{1/4}$, 40 = Rp1$_{1/2}$, 50 = Rp2

Fuel selection: In order to start the burner with natural gas or biogas oil, the operator must commute the selector on the burner control panel on (1) = natural gas, or (2) = biogas.
If the selector is set on (1) the natural gas cock must be open, while the biogas cock must be closed. Viceversa if the selector is set on (2).

Technical specifications

BURNER TYPE		**NG280 M-.TN....0.25**	**NG280 M-.TN....0.32**	**NG280 M-.TN.....0.40**	**LG280 L-.TN....0.20**	**LG280 L-.TN....0.25**	**LG280 L-.TN....0.32**
Output	min.- max. kW	95 - 300					
Fuel		Natural gas			L.P.G.		
Category		(see next paragraph)			$I_{3B/P}$		
Gas rate	min.- max. (Stm^3/h)	10 – 32			3,7 – 11,5		
Gas pressure	min.- max. mbar	(Note2) - 360					
Power supply		220 / 230V - 50 / 60 Hz					
Total power consumption	kW	0,55 (50 Hz) - 0,6 (60 Hz)					
Electric motor	kW	0,25 (50 Hz) - 0,3 (60 Hz)					
Protection		IP40					
Approx. weight	kg	47					
Valves size / Gas connection		1" / Rp1	1"¼/ Rp 1 ¼	1"½ / Rp 1½	3/4"/ Rp3/4	1"/ Rp1	1"$_{1/4}$ / Rp 1$_{1/4}$
Operation		Single stage					
Operating temperatureTempérature de fonctionnement °C		-10 ÷ +50					
Storage TemperatureTempérature de stockage °C		-20 ÷ +60					
Working service*		Intermittent					

BURNER TYPE		**NG280 M-.xx...0.25**	**NG280 M-.xx...0.32**	**NG280 M-.xx...0.40**	**LG280 L-.xx...0.20**	**LG280 L-.xx...0.25**	**LG280 L-.xx...0.32**
Output	min.- max. kW	65 - 300					
Fuel		Natural gas			L.P.G.		
Category		(see next paragraphvoir paragraphe suivant			$I_{3B/P}$		
Gas rate	min.- max. (Stm³/h)	7 – 32			2,5 – 11,5		
Gas Pressure	min.- max. mbar	(voir la note 2Note2) - 360					
Power supply		220 / 230V - 50 / 60 Hz					
Total power consumption	kW	0,55 (50 Hz) - 0,6 (60 Hz)					
Electric motor	kW	0,25 (50 Hz) - 0,3 (60 Hz)					
Protection		IP40					
Approx. weight	kg	47					
Valves size / Gas connection		1" / Rp 1	1" ¼ / Rp 1 ¼	1" ½ / Rp 1" ½	1" / Rp1	1" / Rp1	1"$_{1/4}$ / Rp 1$_{1/4}$
Operation		Double-stage - Progressive - Fully modulating					
Operating temperatureTempérature de fonctionnement °C		-10 ÷ +50					
Storage TemperatureTempérature de stockage °C		-20 ÷ +60					
Working serviceType de service*		IntermittentIntermittentIntermittent					

BURNER TYPE		NG350 M-.TN....0.25	NG350 M-.TN....0.32	NG350 M-.TN.....0.40	LG350 L-.TN....0.25	LG350 L-.TN....0.32	LG350 L-.TN.....0.40
Output	min.- max. kW	115 - 330					
Fuel		Natural gas			L.P.G.		
Category		(see next paragraphvoir paragraphe suivant)			$I_{3B/P}$		
Gas rate	min.- max. (Stm³/h)	12 – 35			4 – 13		
Gas pressure	min.- max. mbar	(Note2voir la note 2) - 360					
Power supply		220 / 230V - 50 / 60 Hz					
Total power consumption	kW	0,67 (50 Hz) - 0,75 (60 Hz)					
Electric motor	kW	0,37 (50 Hz) - 0,45 (60 Hz)					
Protection		IP40					
Approx. weight	kg	47					
Valves size / Gas connection		1" / Rp 1	1" ¼ / Rp 1 ¼	1" ½ / Rp 1½	1" / Rp1	$1"_{1/4}$ / Rp $1_{1/4}$	$1"_{1/2}$ / Rp $1_{1/2}$
Operation		Single stage					
Operating temperatureTempérature de fonctionnement °C		-10 ÷ +50					
Storage TemperatureTempérature de stockage °C		-20 ÷ +60					
Working serviceType de service*		intermittentIntermittent					

Technical specifications

BURNER TYPE		NG350 M-.xx...0.25	NG350 M-.xx...0.32	NG350 M-.xx...0.40	LG350 L-.xx...0.25	LG350 L-.xx...0.32	LG350 L-.xx...0.40
Output	min.- max. kW	80 - 330			85 - 330		
Fuel		Natural gas			L.P.G.		
Category		(see next paragraphvoir paragraphe suivant)			$I_{3B/P}$	$I_{3B/P}$	$I_{3B/P}$
Gas rate	min.- max. (Stm³/h)	8.5 – 35	8.5 – 35	8.5 – 35	3 – 13	3 – 13	3 – 13
Gas pressure	min.- max. mbar	(Note2voir la note 2) - 360					
Power supply		220 / 230V - 50 / 60 Hz					
Total power consumption	kW	0,67 (50 Hz) - 0,75 (60 Hz)					
Electric motor	kW	0,37 (50 Hz) - 0,45 (60 Hz)					
Protection		IP40					
Approx. weight	kg	47					
Valves size / Gas connection		1" / Rp 1	1" ¼ / Rp 1 ¼	1" ½ / Rp 1½	1" / Rp1	$1"_{1/4}$ / Rp $1_{1/4}$	$1"_{1/2}$ / Rp $1_{1/2}$
Operation		Progressive - Fully modulating					
Operating temperatureTempérature de fonctionnement °C		-10 ÷ +50					
Storage TemperatureTempérature de stockage °C		-20 ÷ +60					
Working serviceType de service*		Intermittentintermittent					

BURNER TYPE		NG400 M-.TN....0.25	NG400 M-.TN....0.32	NG400 M-.TN.....0.40	NG400 M-.TN.....0.50
Output	min.- max. kW	185 - 420			
Fuel		Natural gas			
Category		(see next paragraphvoir paragraphe suivant)			
Gas rate	min.- max. (Stm³/h)	20 - 44.5			
Gas pressure	min.- max. mbar	(Note2voir la note 2) - 360			
Power supply		220 / 230V - 50 / 60 Hz			
Total power consumption	kW	0,67 (50 Hz) - 0,75 (60 Hz)			
Electric motor	kW	0,37 (50 Hz) - 0,45 (60 Hz)			
Protection		IP40			
Approx. weight	kg	47			
Valves size / Gas connection		1" / Rp 1	1" ¼ / Rp 1 ¼	1" ½ / Rp 1½	2" / Rp 2
Operation		Single-stage			
Operating temperatureTempérature de fonctionnement °C		-10 ÷ +50			
Storage TemperatureTempérature de stockage °C		-20 ÷ +60			
Working serviceType de service*		Intermittentintermittent			

		NG400 M-.xx...0.25	NG400 M-.xx...0.32	NG400 M-.xx...0.40	NG400 M-.xx...0.50
Output	min.- max. kW	115 - 420			
Fuel		Natural gas			
Category		(see next paragraph)			
Gas rate	min.- max. (Stm³/h)	12 - 44.5			
Gas pressure	min.- max. mbar	(Note2) - 360			
Power supply		220 / 230V - 50 / 60 Hz			
Total power consumption	kW	0,67 (50 Hz) - 0,75 (60 Hz)			
Electric motor	kW	0,37 (50 Hz) - 0,45 (60 Hz)			
Protection		IP40			
Approx. weight	kg	47			
Valves size / Gas connection		1" / Rp 1	1" ¼ / Rp 1 ¼	1" ½ / Rp 1" ½	2" / Rp 2
Operation		Progressive - Fully modulating			
Operating temperature °C		-10 ÷ +50			
Storage Temperature °C		-20 ÷ +60			
Working service*		Intermittent			

BURNER TYPE		LG400 L-.xx...0.25	LG400 L-.xx...0.32	LG400 L-.xx...0.40	LG400 L-.xx...0.50
Output	min.- max. kW	105 - 420			
Fuel		L.P.G.			
Category		$I_{3B/P}$			
Gas rate	min.- max. (Stm³/h)	4 - 16			
Gas pressure	min.- max. mbar	(Note2) - 360			
Power supply		220 / 230V - 50 / 60 Hz			
Total power consumption	kW	0,67 (50 Hz) - 0,75 (60 Hz)			
Electric motor	kW	0,37 (50 Hz) - 0,45 (60 Hz)			
Protection		IP40			
Approx. weight	kg	47			
Valves size / Gas connection		1" / Rp 1	1" ¼ / Rp 1 ¼	1" ½ / Rp 1" ½	2" / Rp 2
Operation		Progressive - Fully modulating			
Operating temperature °C		-10 ÷ +50			
Storage Temperature °C		-20 ÷ +60			
Working service*		Intermittent			

BURNER TYPE		LG400 L-.TN...0.25	LG400 L-.TN...0.32	LG400 L-.TN...0.40	LG400 L-.TN...0.50
Output	min.- max. kW	180 - 420			
Fuel		L.P.G.			
Category		$I_{3B/P}$			
Gas rate	min.- max. (Stm³/h)	6,7 - 15,7			
Gas pressure	min.- max. mbar	(Note2) - 360			
Power supply		220 / 230V - 50 / 60 Hz			
Total power consumption	kW	0,67 (50 Hz) - 0,75 (60 Hz)			
Electric motor	kW	0,37 (50 Hz) - 0,45 (60 Hz)			
Protection		IP40			
Approx. weight	kg	47			
Valves size / Gas connection		1" / Rp 1	1" ¼ / Rp 1 ¼	1" ½ / Rp 1" ½	2" / Rp 2
Operation		Single-stage			
Operating temperature °C		-10 ÷ +50			
Storage Temperature °C		-20 ÷ +60			
Working service*		Intermittent			

Low NOx burners Technical specifications

BURNER TYPE		NGX280 M-.TN...0.25	NGX280 M-.TN...0.32	NGX280 M-.TN...0.40
Output	min.- max. kW	93 - 190		
Fuel		Natural gas		
Category		(see next paragraphvoir paragraphe suivant)		
Gas rate	min.- max. (Stm^3/h)	9,8 - 20		
Gas Pressure	min.- max. mbar	(Note2voir la note 2) - 360		
Power supply		220 / 230V - 50 / 60 Hz		
Total power consumption	kW	0,55 (50 Hz) - 0,6 (60 Hz)		
Electric motor	kW	0,25 (50 Hz) - 0,3 (60 Hz)		
Protection		IP40		
Approx. weight	kg	47		
Valves size / Gas connection		1" / Rp1	$1"_{1/4}$ / Rp $1_{1/4}$	$1"_{1/2}$ / Rp $1_{1/2}$
Operation		Single-stage		
Operating temperatureTempérature de fonctionnement °C		-10 ÷ +50		
Storage TemperatureTempérature de stockage °C		-20 ÷ +60		
Working serviceType de service*		Intermittentintermittent		

BURNER TYPE		NGX280 M-.xx...0.25	NGX280 M-.xx...0.32	NGX280 M-.xx...0.40
Output	min.- max. kW	60 - 190		
Fuel		Natural gas		
Category		(see next paragraphvoir paragraphe suivant)		
Gas rate	min.- max. (Stm^3/h)	6,4 - 20		
Gas pressure	min.- max. mbar	(Note2voir la note 2) - 360		
Power supply		220 / 230V - 50 / 60 Hz		
Total power consumption	kW	0,55 (50 Hz) - 0,6 (60 Hz)		
Electric motor	kW	0,25 (50 Hz) - 0,3 (60 Hz)		
Protection		IP40		
Approx. weight	kg	47		
Valves size / Gas connection		1" / Rp1	$1"_{1/4}$ / Rp $1_{1/4}$	$1"_{1/2}$ / Rp $1_{1/2}$
Operation		Double-stage - Progressive - Fully modulating		
Operating temperatureTempérature de fonctionnement °C		-10 ÷ +50		
Storage TemperatureTempérature de stockage °C		-20 ÷ +60		
Working serviceType de service*		Intermittentintermittent		

BURNER TYPE		NGX350 M-.xx...0.25	NGX350 M-.xx...0.32	NGX350 M-.xx...0.40
Output	min.- max. kW	65 - 260		
Fuel		Natural gas		
Category		(see next paragraphvoir paragraphe suivant)		
Gas rate	min.- max. min.- max.(Stm^3/h)	7 - 27.5		
Gas pressure	min.- max. mbar	(voir la note 2Note2) - 360		
Power supply		220 / 230V - 50 / 60 Hz		
Total power consumption	kW	0,67 (50 Hz) - 0,75 (60 Hz)		
Electric motor	kW	0,37 (50 Hz) - 0,45 (60 Hz)		
Protection		IP40		
Approx. weight	kg	47		
Valves size / Gas connection		1" / Rp1	$1"_{1/4}$ / Rp $1_{1/4}$	$1"_{1/2}$ / Rp $1_{1/2}$
Operation		Progressive - Fully modulating		
Operating temperatureTempérature de fonctionnement °C		-10 ÷ +50		
Storage TemperatureTempérature de stockage °C		-20 ÷ +60		
Working serviceType de service*		Intermittentintermittent		

BURNER TYPE		NGX400 M-.xx...0.25	NGX400 M-.xx...0.32	NGX400 M-.xx...0.40	NGX400 M-.xx...0.50
Output	min.- max. kW	90 - 350			
Fuel		Natural gas			
Category		(see next paragraphvoir paragraphe suivant)			
Gas rate	min.- max. (Stm^3/h)	9.5 - 37			
Gas pressure	min.- max. mbar	(Note2voir la note 2) - 360			
Power supply		220 / 230V - 50 / 60 Hz			
Total power consumption	kW	0,67 (50 Hz) - 0,75 (60 Hz)			
Electric motor	kW	0,37 (50 Hz) - 0,45 (60 Hz)			
Protection		IP40			
Approx. weight	kg	47			
Valves size / Gas connection		1" / Rp 1	1" ¼ / Rp 1 ¼	1" ½ / Rp 1" ½	2" / Rp 2
Operation		Progressive - Fully modulating			
Operating temperatureTempérature de fonctionnement °C		-10 ÷ +50			
Storage TemperatureTempérature de stockage °C		-20 ÷ +60			
Working serviceType de service*		Intermittentintermittent			

* **NOTE ON THE WORKING SERVICE: the control box automatically stops after 24h of continuous working. The control box immediately starts up, automatically.**

Note1:	**All gas flow rates are referred to Stm^3/h (1013 mbar absolute pressure, 15 °C temperature) and are valid for Biogas gas (net calorific value H_i = 23 MJ/Stm^3);**
Note2:	**Maximum gas pressure = 360mbar (with Dungs MBDLE)** **Maximum gas pressure = 500mbar (with Siemens VGD or Dungs MultiBloc MBE)**

Gas categories and countries of application

Countries
AL, AT, BE, BG, CH, CY, DE, DK, EE, ES, FI, FR, GB, GR, HR, HU, IE, IS, IT, LT, LU, LV, MK, MT, NO, NL, PL, PT, RO, SE, SI, SK, TR

Group	
H	L (*)
E	2R (*)
EK (*)	Er (*)
LL (*)	E (R)

(*) Premix type ...N burners are not enabled to work with these gas categories.

The above gas groups can be combined according to the standard EN437:2021 and national situation of countries.

How to read the burner "Performance curve"

To check if the burner is suitable for the boiler to which it must be installed, the following parameters are needed:

- furnace input, in kW or kcal/h (kW = kcal/h/860);
- backpressure (data are available on the boiler ID plate or in the user's manual).

Example:

Furnace input: 600kW

Backpressure: 4 mbar

In the "Performance curve" diagram, draw a vertical line matching the furnace input value and an horizontal line matching the backpressure value. The burner is suitable if the intersection point A is inside the performance curve.
Data are referred to standard conditions: atmospheric pressure at 1013 mbar, ambient temperature at 15° C.

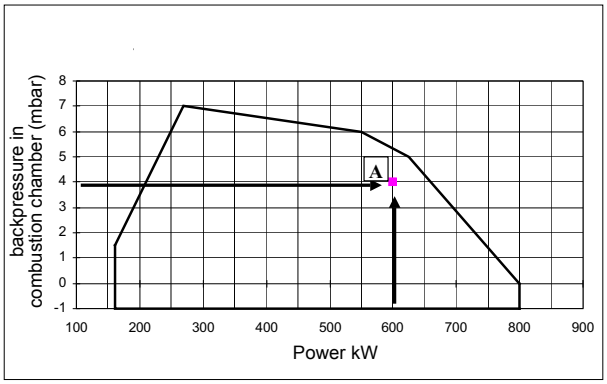

Checking the proper gas train size

To check the proper gas train size, it is necessary to the available gas pressure value upstream the burner's gas valve. Then subtract the backpressure. The result is called **pgas.** Draw a vertical line matching the furnace input value (600kW, in the example), quoted on the x-axis, as far as intercepitng the network pressure curve, according to the installed gas train (DN65, in the example). From the interception point, draw an horizontal line as far as matching, on the y-axis, the value of pressure necessary to get the requested furnace input. This value must be lower or equal to the **pgas** value, calculated before.

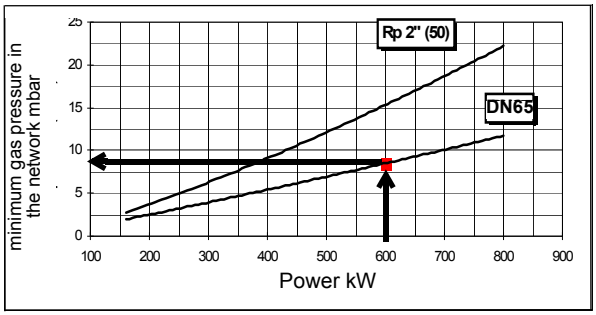

Performance Curves

- ***Gas burners***

NG280 Single stage

NG280 Duoble stage-Progressive

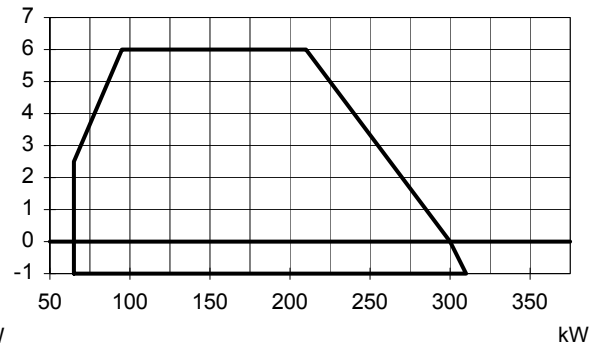

NG350 Single stage

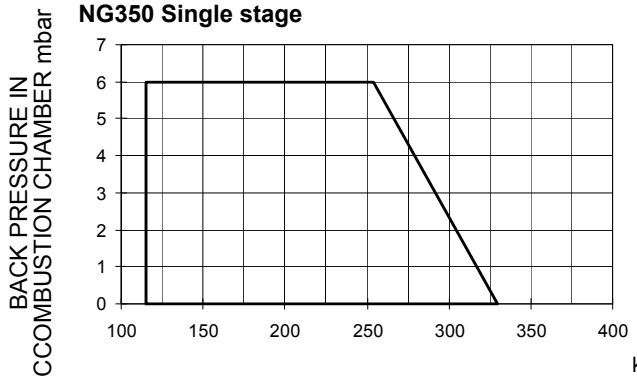

NG350 Progressive

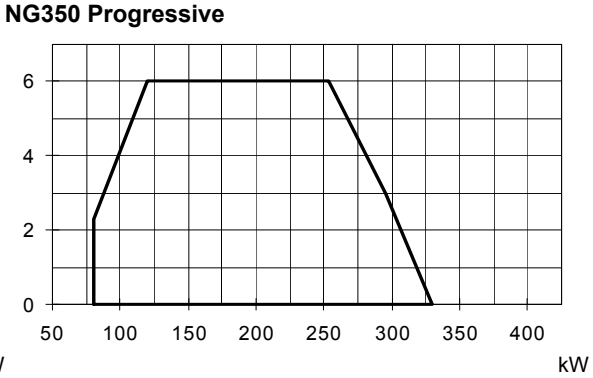

NG400 Single stage

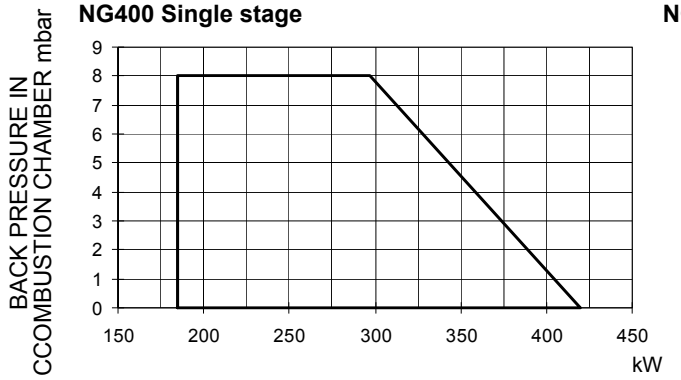

NG400 Progressive

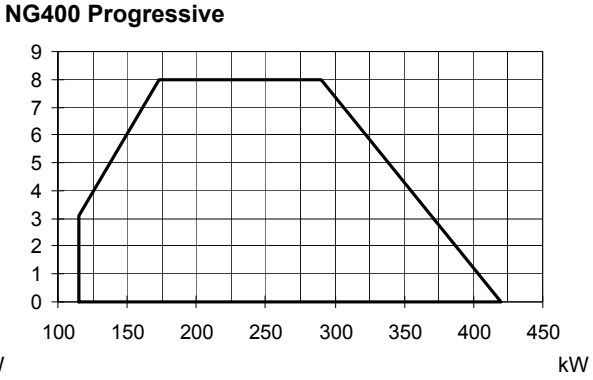

- ***L.P.G. Burners***

LG280 Single stage

LG280 Duoble stage-Progressive

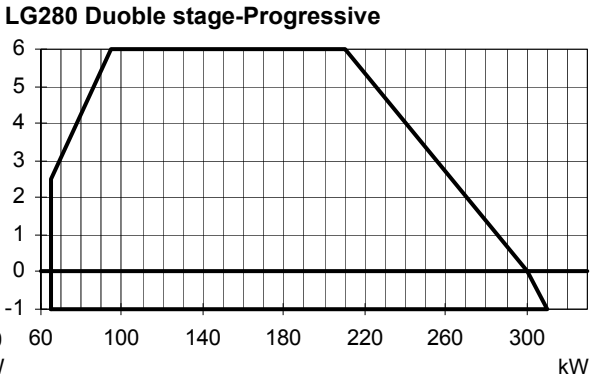

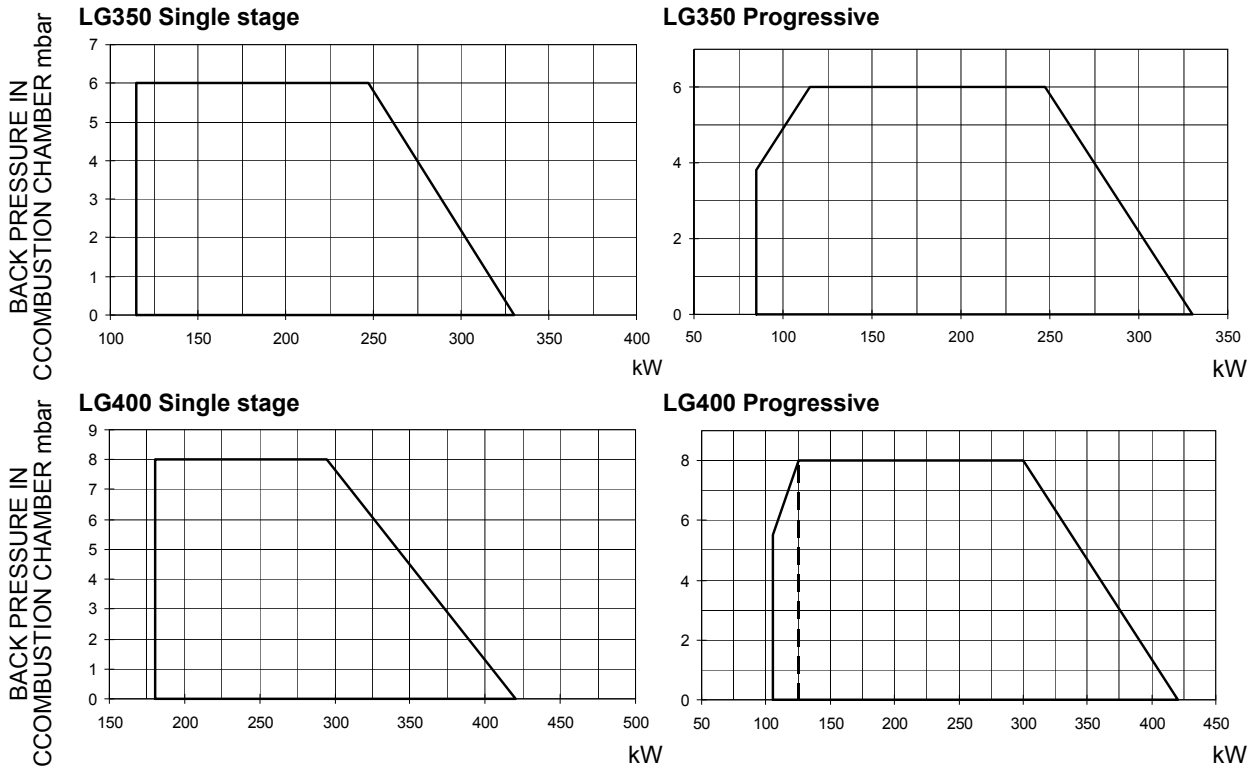

- ***Low NOx burners***

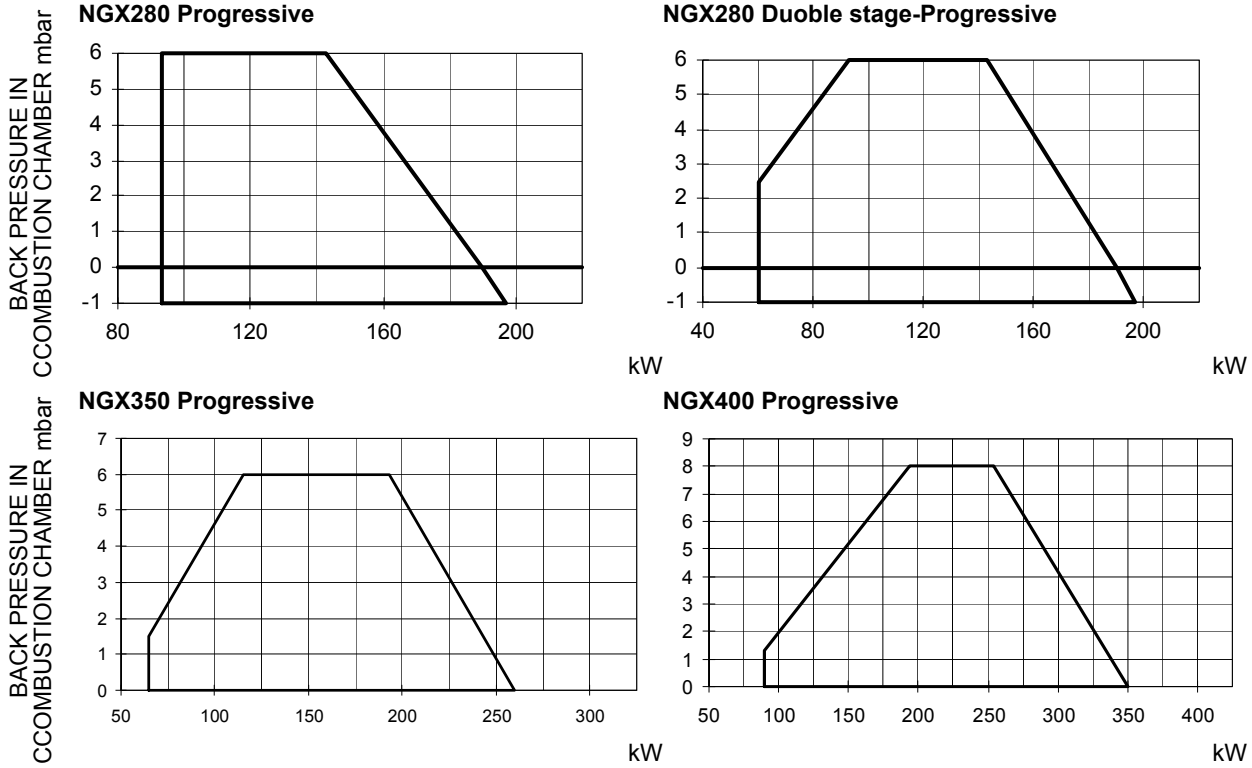

Data are referred to standard conditions: atmospheric pressure at 1013mbar, ambient temperature at 15°C.

NOTE: The performance curve is a diagram that represents the burner performance in the type approval phase or in the laboratory tests, but does not represent the regulation range of the machine. On this diagram the maximum output point is usually reached by adjsuting the combustion head to its “MAX” position (see paragraph “Adjusting the combustion head”); the minimum output point is reached setting the combustion head to its “MIN” position. During the first ignition, the combustion head is set in order to find a compromise between the burner output and the generator specifications, that is why the minimum output may be different from the Performance curve minimum

Pressure in the network - gas flow rate curves

- ***Gas burners***

NG280 M-.TN...

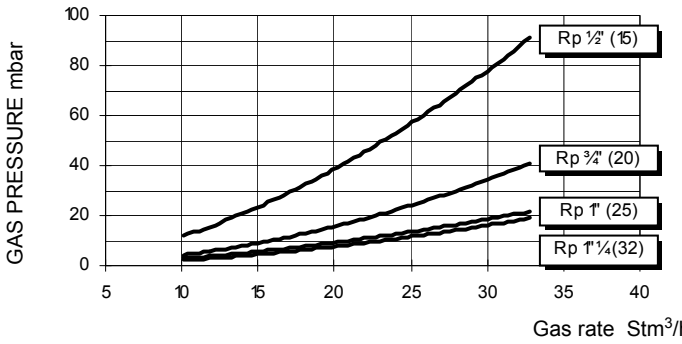

NG280 M-.xx...

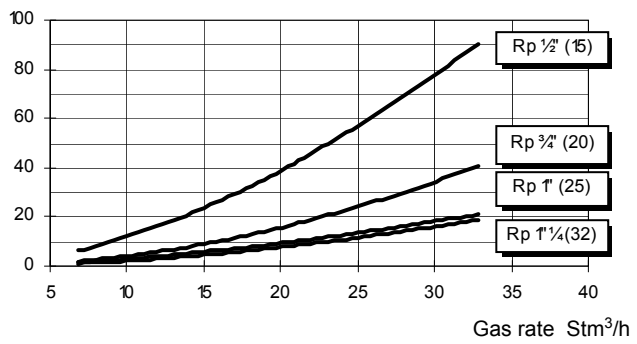

NG350 M-.TN...

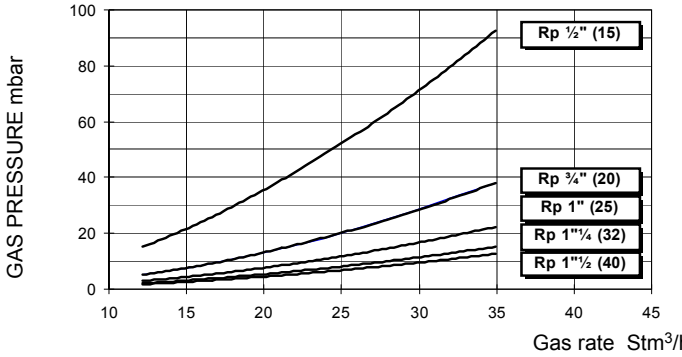

NG350 M-.PR/MD...

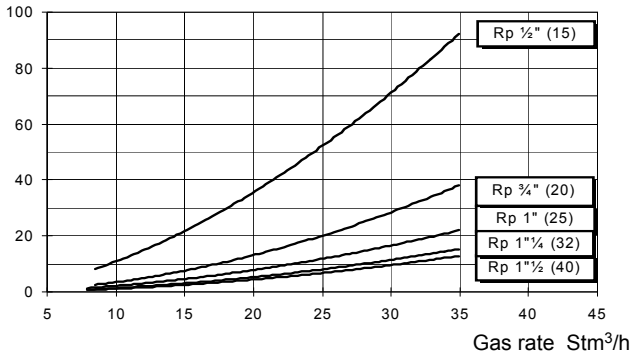

NG400 M-.TN..15-20-25

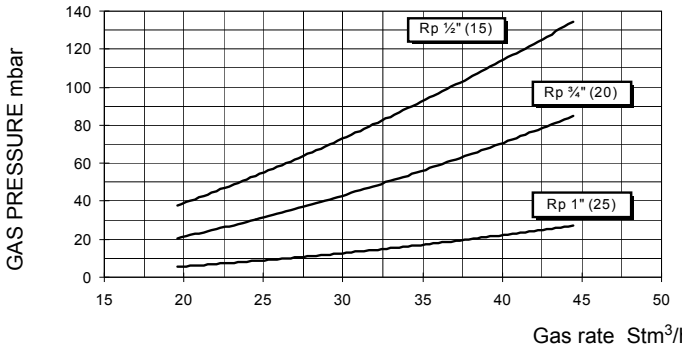

NG400 M-.TN..32-40-50

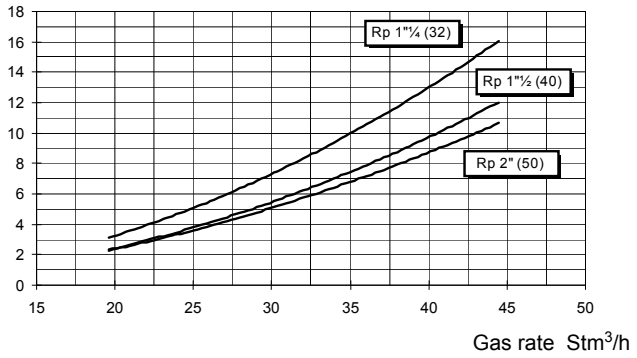

NG400 M-.PR/MD...15-20-25

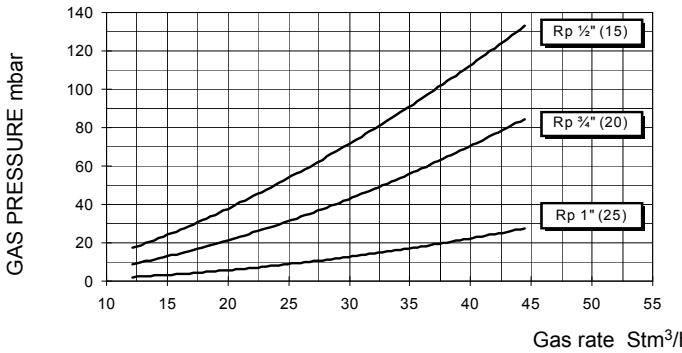

NG400 M-.PR/MD...32-40-50

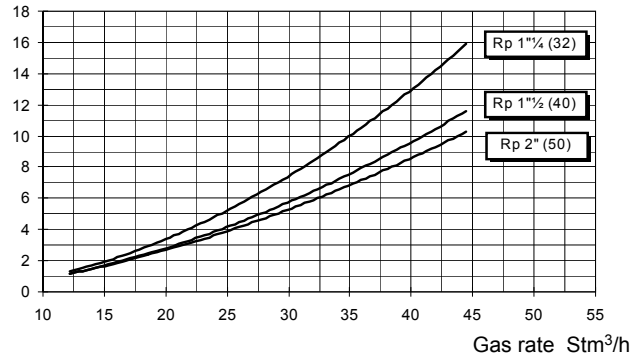

- ***L.P.G. Burners***

LG280 L-.TN...

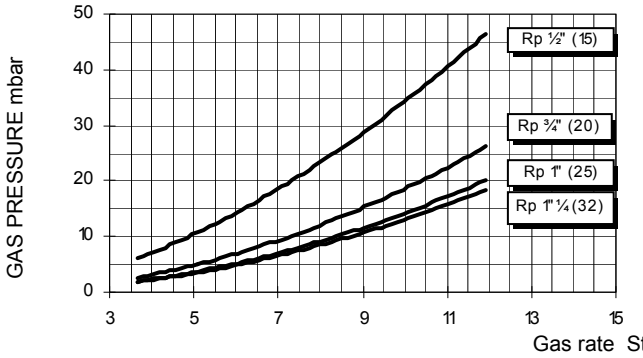

LG280 L-.xx...

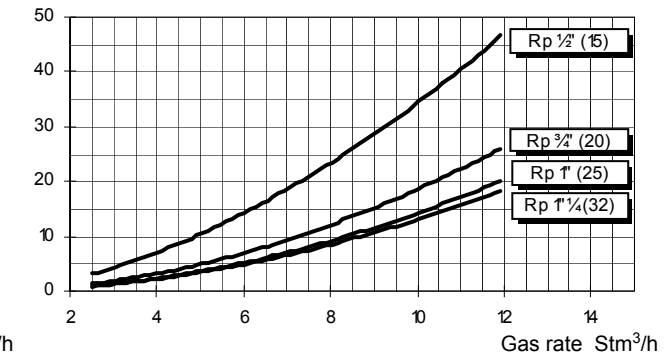

LG350 L-.TN...

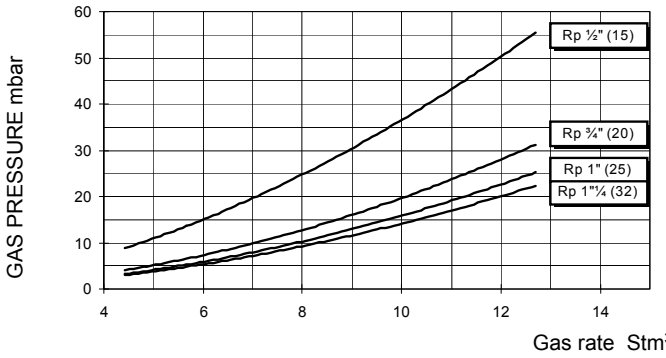

LG350 L-.PR/MD....

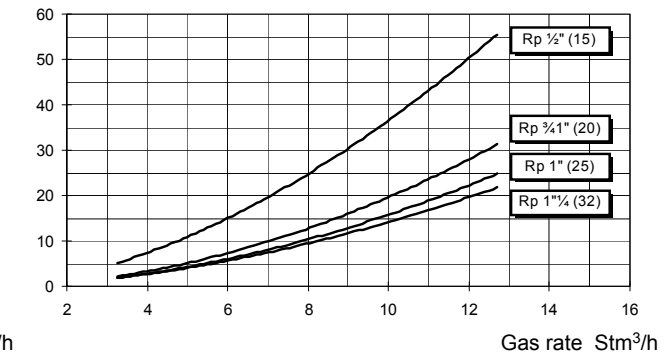

LG400 L-.TN...

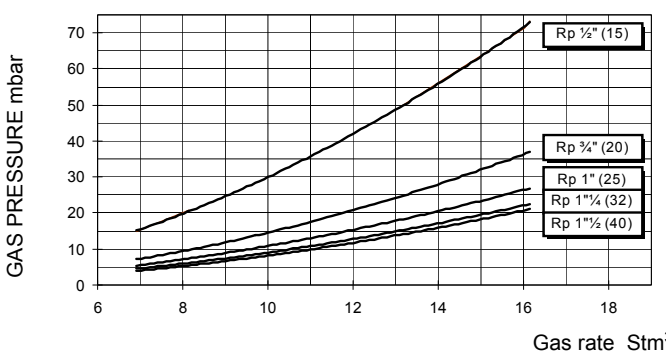

LG400 L-.PR/MD....

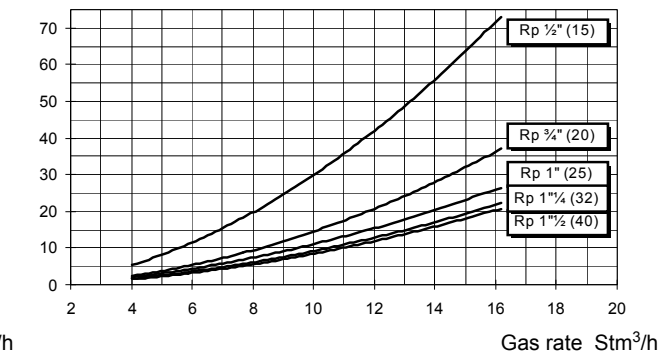

- ***Low NOx burners***

NGX280 M-.TN..

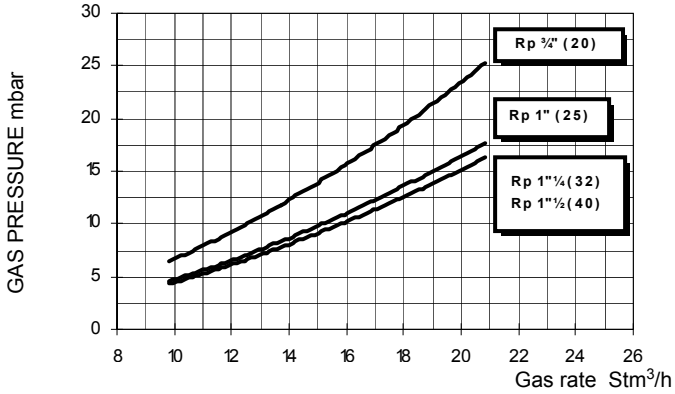

NGX280 M-.xx..

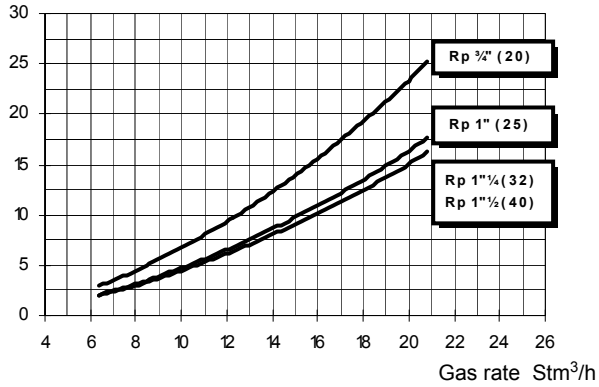

NGX350 Progressive

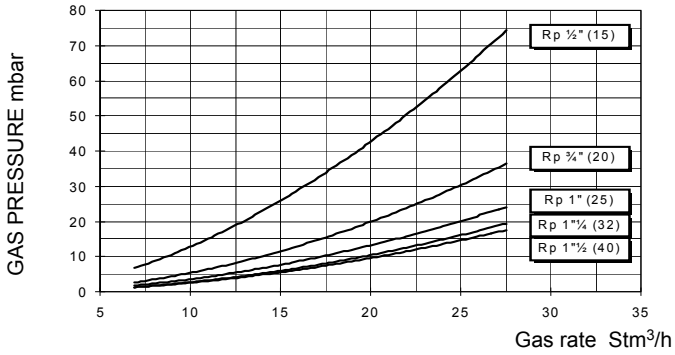

NGX400 M-...15-20-25

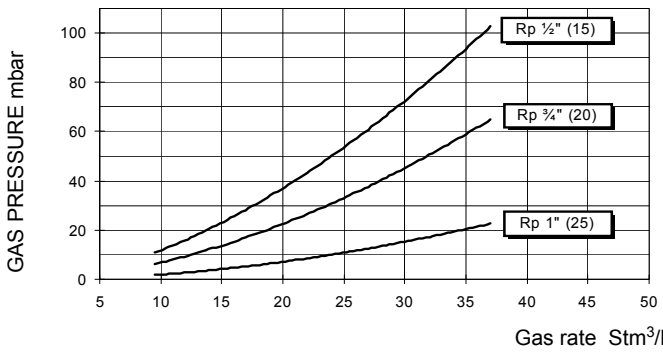

NGX400 M-...32-40-50

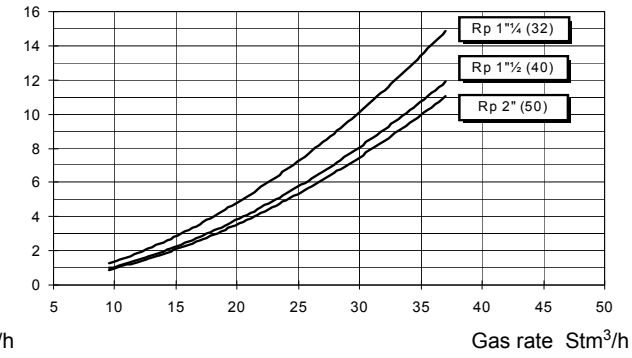

Caution: the gas rate value is quoted on the x-axis, the related network pressure is quoted on the y-axis (pressure value in the combustion chamber is not included). To know the minimum pressure at the gas train inlet, necessary to get the requested gas rate, add the pressure value in the combustion chamber to the value read on the y-axis.

Gas pressure curves in head vs. the flow rate

Curves are referred to pressure= 0mbar in the combustion head!

The curves referred to the gas pressure in head are referred to the burner properly setted (percentage of residual O_2 in the flues as shown in the "Recommended combustion values" table and CO in the standard limits). To measure the pressure in the combustion chamber, as far as the IDEA series, a pressure plug is provided upstream the burner's blast tube.

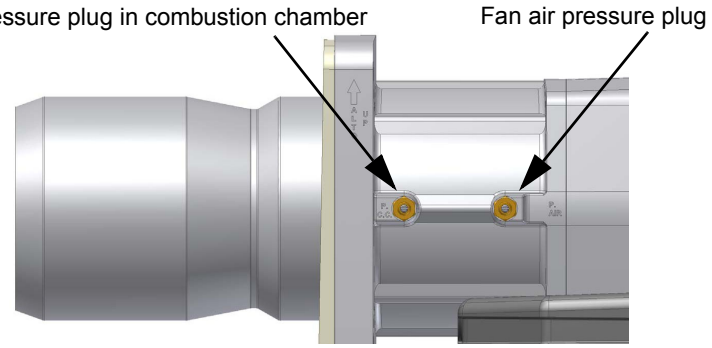

Fig. 1

Refer to Fig. 2, showing the correct way to measure the gas pressure, considering the values of pressure in combustion chamber, surveyed by means of the pressure gauge or taken from the boiler's Technical specifications. The measurement should be taken at the maximum output .

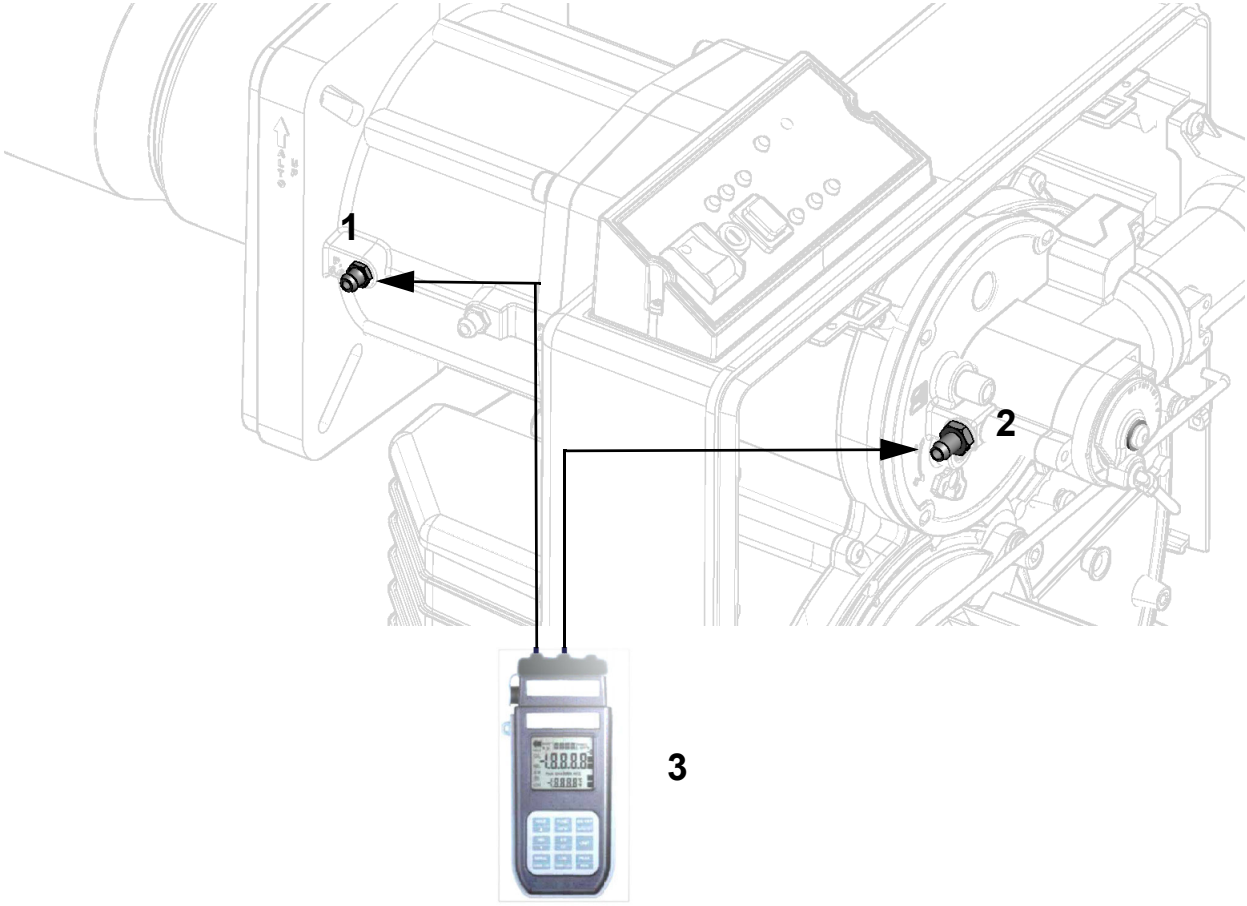

Fig. 2

Key

1 Pressure outlet on the combustion chamber
2 Gas pressure outlet on the butterfly valve
3 Differential pressure gauge

The differential pressure detected can be used with the graphs of the following paragraph in order to obtain the maximum flow rate of gas burned.(Stm^3/h)**NOTE: THE PRESSURE-RATE CURVES ARE APPROXIMATE; FOR A PROPER SETTING OF THE GAS RATE, PLEASE REFER TO THE GAS METER READING.**

Pressure in the combustion head vs. gas flow rate curves

- ***nNatural gas burners***

NG280 -

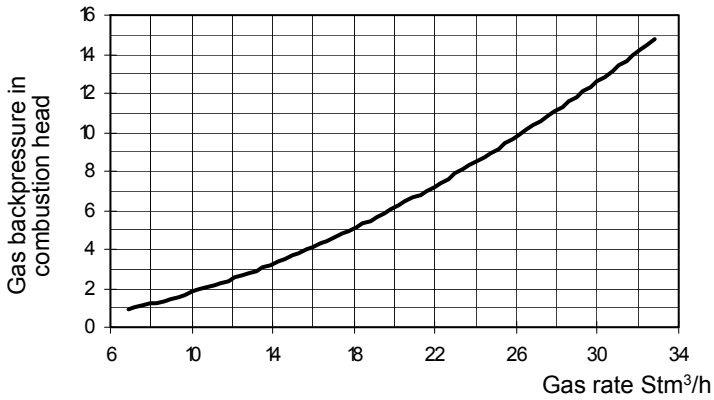

NG350 -

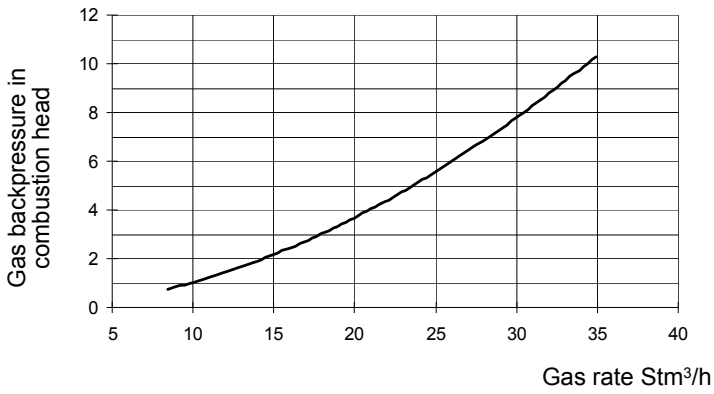

NG400 -

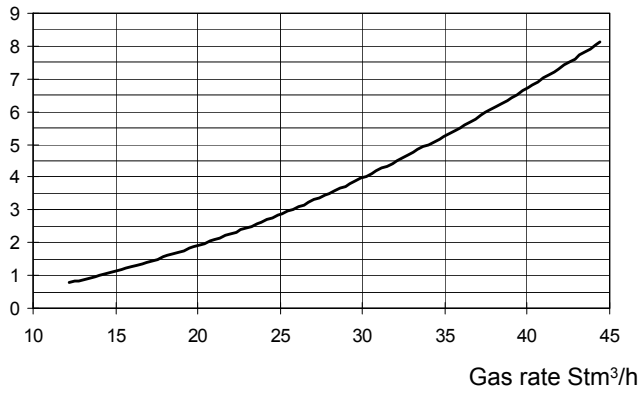

- **L.P.G. Burners**

LG280 -

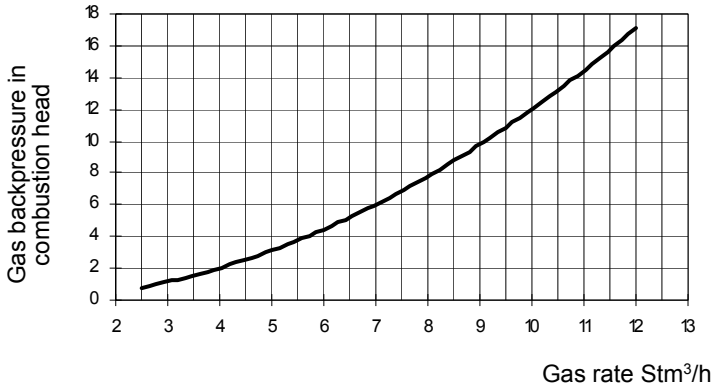

LG350 -

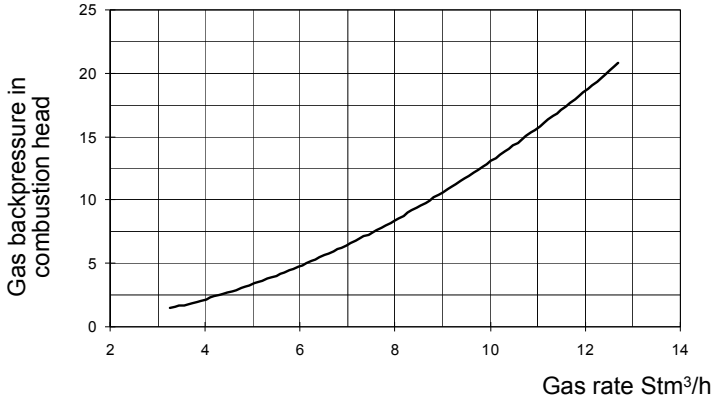

LG400 -

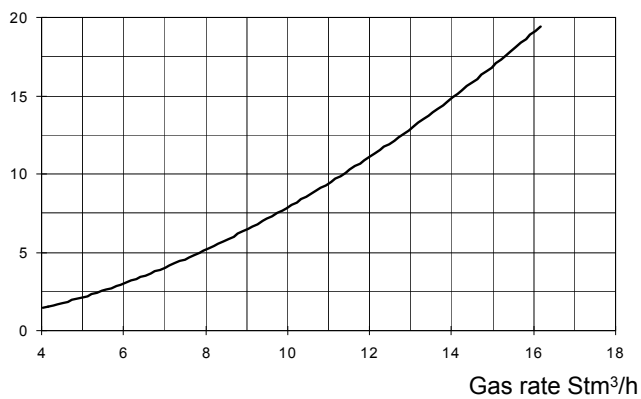

- **Low NOx burners**

NGX280

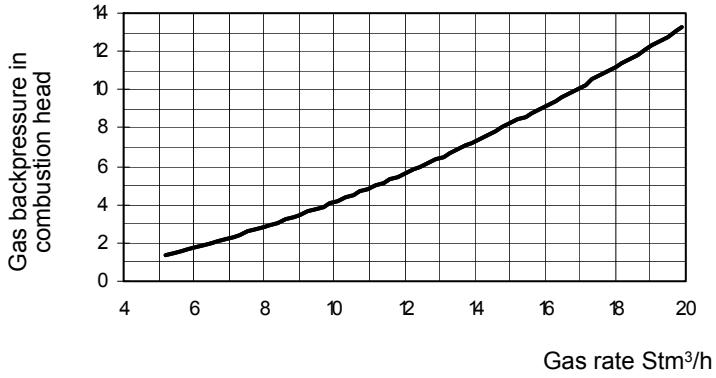

NGX350

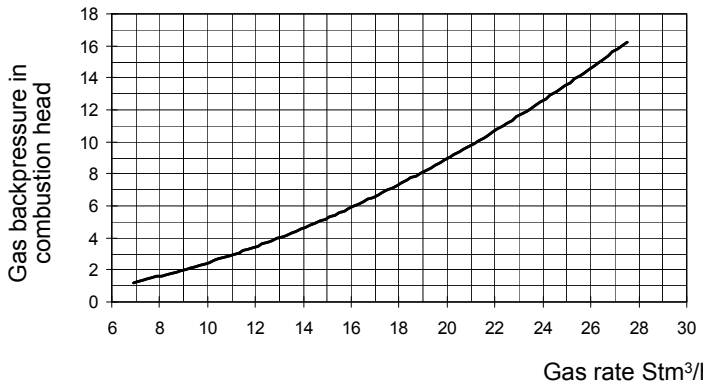

NGX400

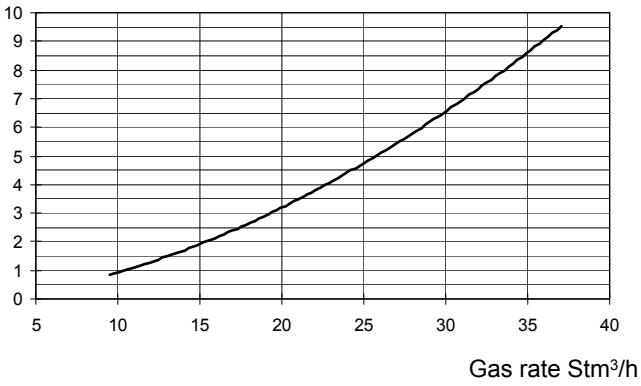

Overall dimensions (mm)

- *Standard burners*

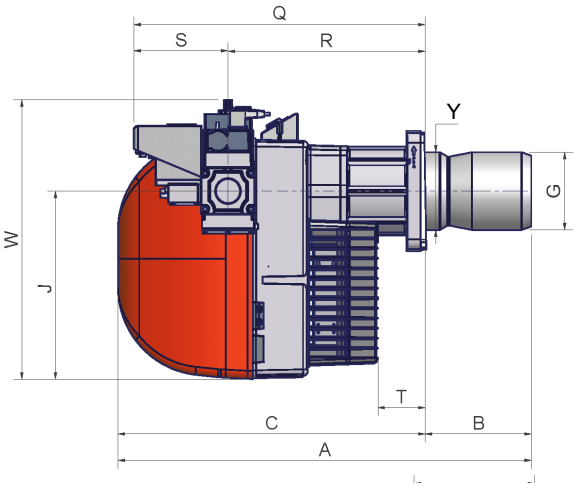

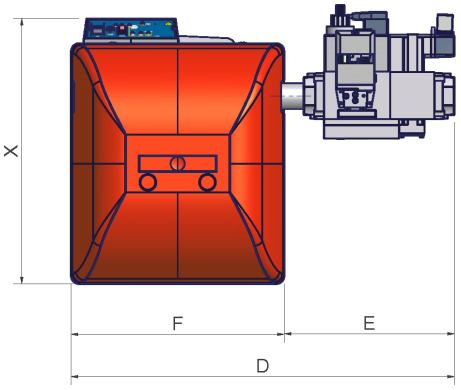

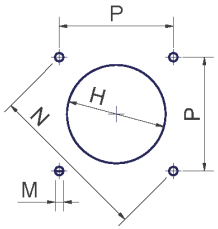

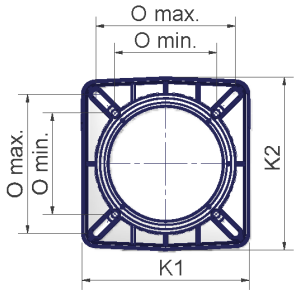

Recommended boiler drilling template and burner flange

	A(S*)	A(L)*	B(S*)	B(L)*	C	F	G	H	J	K1	K2	M	N	Omin	Omax	P	Q	R	S	T	X	Y
NG/LG280	733	878	163	308	570	396	117	137	348	215	223	M10	219	131	172	155	541	366	175	128	491	130
NG/LG350	748	878	178	308	570	396	125	164	348	215	223	M10	219	131	172	155	541	366	175	89	491	144
NG/LG400	768	898	198	328	570	396	144	164	348	215	223	M10	219	131	172	155	541	366	175	89	491	144

* S = measure referred to burners fitted with standard blast tube
L = measure referred to burners fitted with extended blast tube

Valves group dimensions according to gas train size.

	D ± 5 mm				E ± 5 mm				W			
	Rp 1	Rp 1 ¼	Rp 1" ½	Rp 2	Rp 1	Rp 1 ¼	Rp 1" ½	Rp 2	Rp 1	Rp 1 ¼	Rp 1" ½	Rp 2
NG/LG280	596	596	726	726	200	200	330	330	508	508	517	567
NG/LG350	596	596	726	726	200	200	330	330	508	508	517	567
NG/LG400	596	596	726	726	200	200	330	330	508	508	517	567

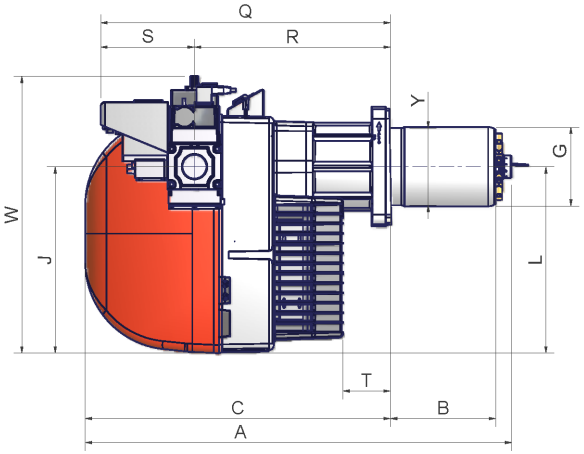

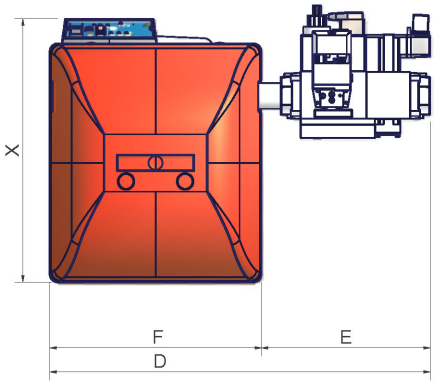

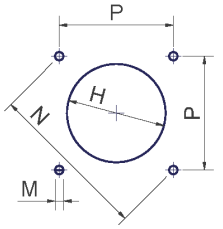

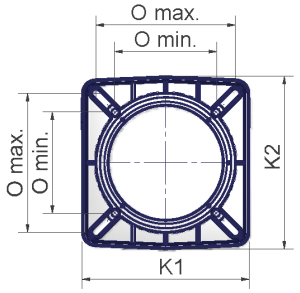

Recommended boiler drilling template and burner flange

	A(S*)	A(L)*	B(S*)	B(L)*	C	F	G	H	J	K1	K2	M	N	Omin	Omax	P	Q	R	S	T	X	Y
NGX280	733	878	163	308	570	396	114	137	348	215	223	M10	219	131	172	155	541	366	175	128	491	130
NGX350	748	878	178	308	570	396	137	164	348	215	223	M10	219	131	172	155	541	366	175	89	491	144
NGX400	768	898	198	328	570	396	156	176	348	215	223	M10	219	131	172	155	541	366	175	89	491	156

* S = measure referred to burners fitted with standard blast tube
L = measure referred to burners fitted with extended blast tube

Valves group dimensions according to gas train size.

	D ± 5 mm				E± 5 mm				W			
	Rp 1	**Rp 1 ¼**	**Rp 1" ½**	**Rp 2**	**Rp 1**	**Rp 1 ¼**	**Rp 1" ½**	**Rp 2**	**Rp 1**	**Rp 1 ¼**	**Rp 1" ½**	**Rp 2**
NGX280	596	596	726	726	200	200	330	330	508	508	517	567
NGX350	596	596	726	726	200	200	330	330	508	508	517	567
NGX400	596	596	726	726	200	200	330	330	508	508	517	567

PART II: INSTALLATION

MOUNTINGS AND CONNECTIONS

Packing

The burners are despatched in cardboard packages whose dimensions are: 800mm x 540mm x 480mm (L x P x H)

Packing cases of this type are affected by humidity; the maximum number of cases to be stacked is indicated outside the packing.

The following are placed in each packing case.

- Burner with gas train;
- gasket to be inserted between the burner and the boiler;
- envelope containing tis manual

When disposing of the burner packing and if the packing is scrapped follow the procedures laid down in the current legislation regarding the disposal of materials.

Fitting the burner to the boiler

To install the burner into the boiler, proceed as follows:

1 make a hole on the closing door of the combustion chamber as described on paragraph “Overall dimensions”)
2 place the burner to the boiler: lift it up and handle it according to the procedure described on paragraph “Handling the burner”;
3 place the stud bolts (5) on boiler’s door, according to the burner drilling template described on paragraph “Overall dimensions”;
4 fasten the stud bolts;
5 place the gasket on the burner flange;
6 install the burner into the boiler;
7 fix the burner to the stud bolts, by means of the fixing nuts, according to the next picture.
8 After fitting the burner to the boiler, ensure that the gap between the blast tube and the refractory lining is sealed with appropriate insulating material (ceramic fibre cord or refractory cement).

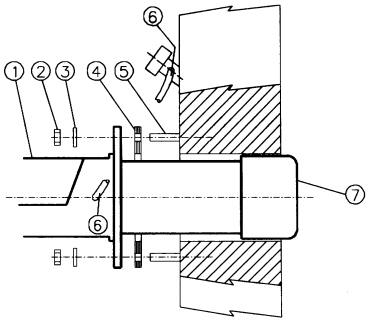

Keys

1 Burner
2 Fixing nut
3 Washer
4 Sealing gasket
5 Stud bolt
7 Blast tube

Burner gasket (NGX400)

To install the burner gasket proceed as shown by the following images.

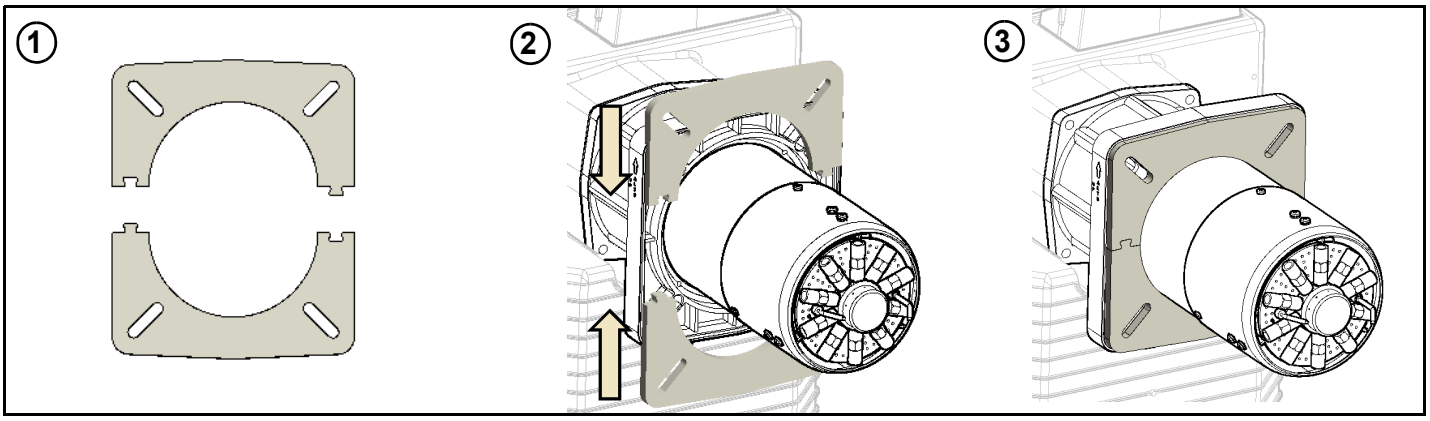

Matching the burner to the boiler

The burners described in this manual have been tested with combustion chambers that comply with EN676 regulation and whose dimensions are described in the diagram . In case the burner must be coupled with boilers with a combustion chamber smaller in diameter or shorter than those described in the diagram, please contact the supplier, to verify that a correct matching is possible, with respect of the application involved. To correctly match the burner to the boiler verify the necessary input and the pressure in combustion chamber are included in the burner performance curve; otherwise the choice of the burner must be revised consulting the burner manufacturer. To choose the blast tube lenght follow the instructions of the boiler manufacturer. In absence of these consider the following:

- Cast-iron boilers, three pass flue boilers (with the first pass in the rear part): the blast tube must protrude no more than 100 mm into the combustion chamber.
- Pressurised boilers with flame reversal: in this case the blast tube must penetrate at least 50 - 100 mm into combustion chamber in respect to the tube bundle plate.

The length of the blast tubes does not always allow this requirement to be met, and thus it may be necessary to use a suitably-sized spacer to move the burner backwards or to design a blast tube tha suites the utilisation (please, contact the manifacturer).

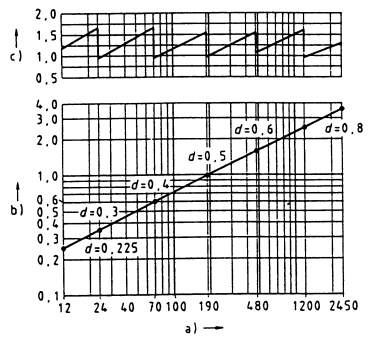

Fig. 3

Key

a) Heat output in kW

b) Length of the flame tube in meters

c) Flame tube firing intensity in MW/m^3

d) Combustion chamber diameter (m)

Fig. 3 - Firing intensity, diameter and lenght of the test flame tube as a function of the heat input in kW.

How to modify the blast tube length (NG/LG350-NG/LG400)

To modify blast tube length please read the following instructions.

1 Remove combustion head (See “Removing the combustion head” - Part III of this user’s guide).

2 Remove the flanged piece **T** by removing the 4 socket head screws **VTF** (Fig. 4).

3 Remove the 4 screws which hold the blast tube to the flanged piece (Fig. 5).

4 Extract the blast tube from the flanged piece and assemble it in the other way round as shown in pictures Fig. 6 and Fig. 7. Now fasten the two pieces using the same screws.

5 Assemble the whole piece to the burner by caring attention to the indication in picture Fig. 9.

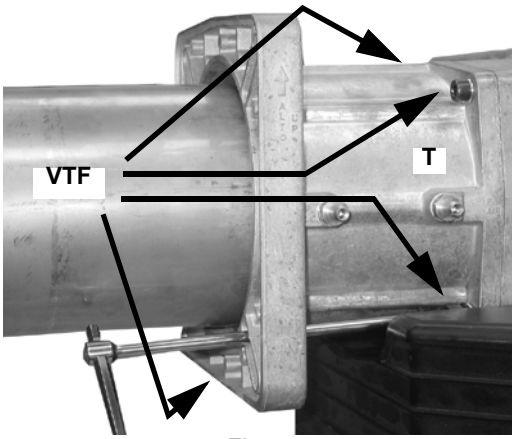

Fig. 4

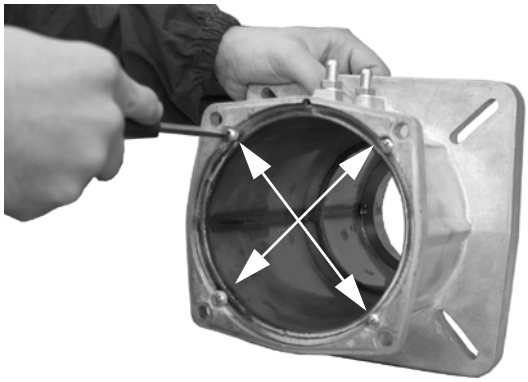

Fig. 5

Fig. 6 - Short blast tube

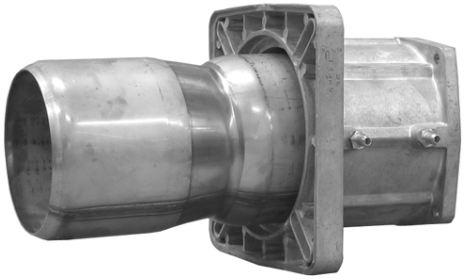

Fig. 7 - Long blast tube

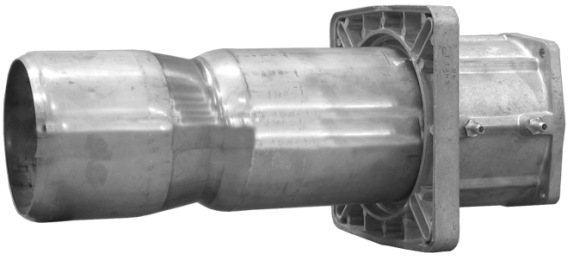

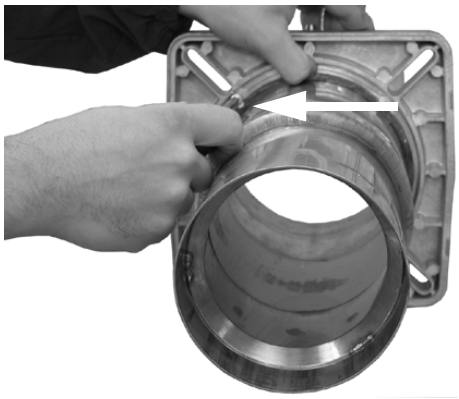

Fig. 8

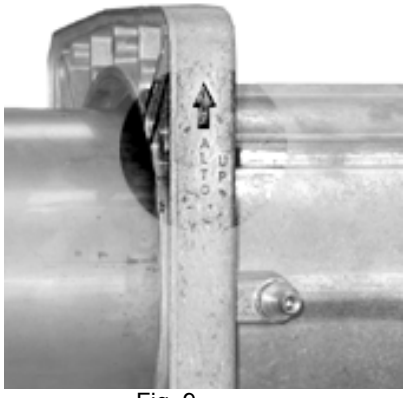

Fig. 9

If you modify the blast tube length you have to modify also the combustion head length by reading the following instructions.

1 Remove the screws **V1** and **V2** as shown in Fig. 10.

2 Lower the terminal part of the combustion head, by moving it with a slight circular movement, until the holes will match (Fig. 11) and tight the screw shown in Fig. 12.

3 Adjust cables length by pulling them very slightly paying particular attention not to disconnect the ionisation cable to the electrode.

4 Fix the combustion head again (See “Removing the combustion head”).

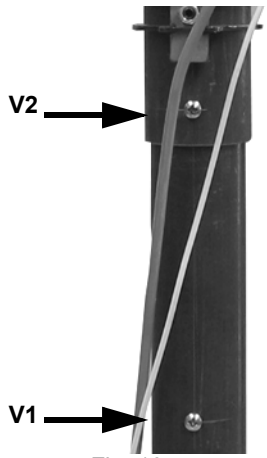

Fig. 10

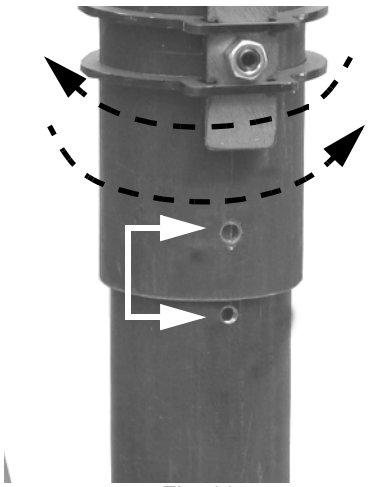
Fig. 11

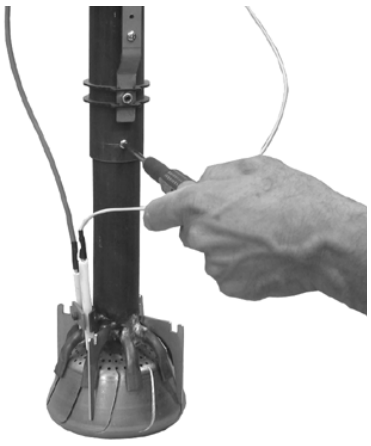
Fig. 12

Gas Train Reversal

The gas train can be fit either on the left and on the right. Follow these instruction..

1 Remove the plastic hook **G** to release the rod **T** (Fig. 13) .
2 Take the screws **V1**, **V2**, **V3**, **V4**, **VT1** and **VT2** off (Fig. 13).
3 Take the ignition cable **CA** off of the transformer .
4 Disconnect the connector **CR** from the printed cirduit (Fig. 14).
5 Take off the flange and the combustion head together (Fig. 16).
6 Take the gas pipe **TR** off and put it in the new position fixing the screws **VT1** and **VT2VT1 VT2** (Fig. 15).

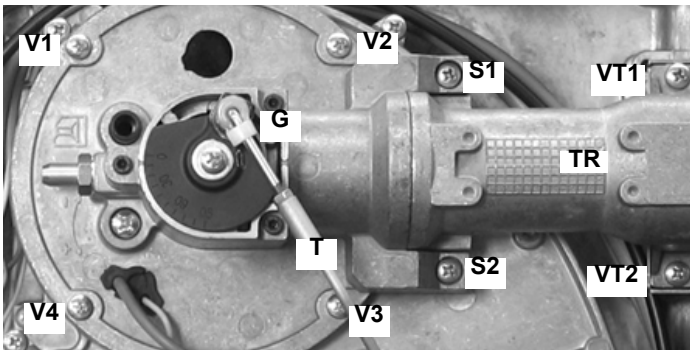

Fig. 13

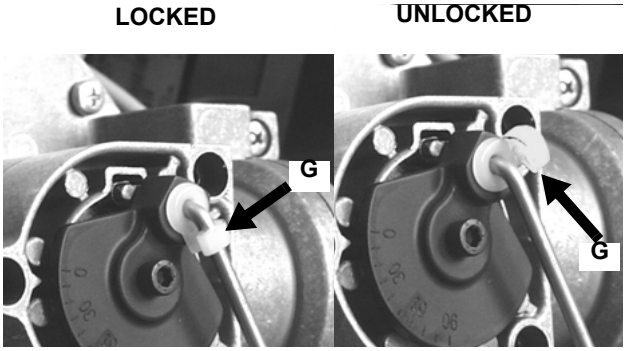

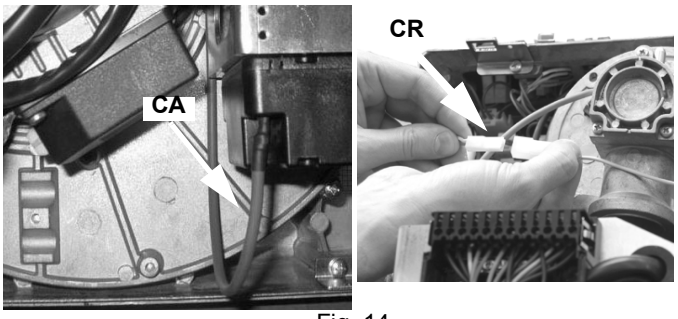

Fig. 14

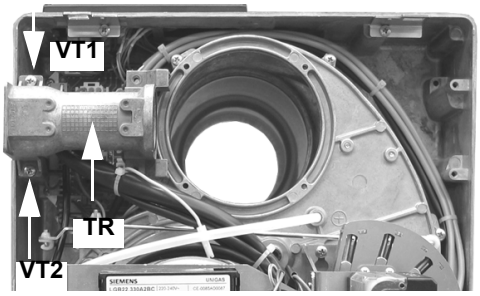

Fig. 15

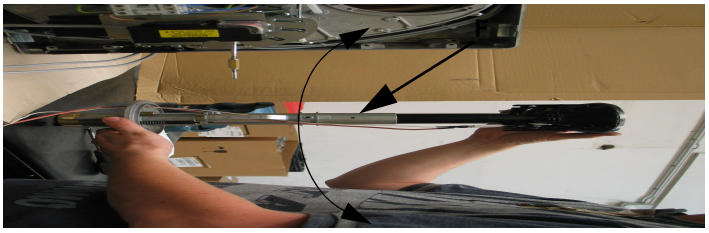
Fig. 16

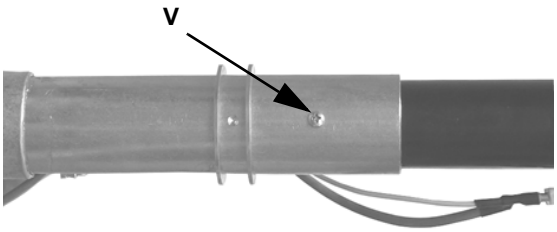

Fig. 17

7 Unscrew the **V**, rotate the head of 180 ° along its axis as shown in(Fig. 16), until the hole **F** is found. Fit the screw again(Fig. 16 - Fig. 17).

8 **(**Fig. 18)Insert again the flange and the combustion head together
9 **(**Fig. 18)Rotate the disc **D** following the instructions below.
10 Take off the screw **VF**.**(**Fig. 18)
11 Rotate the disc **D** for 180 ° and then fit the screw **VF (**Fig. 19).

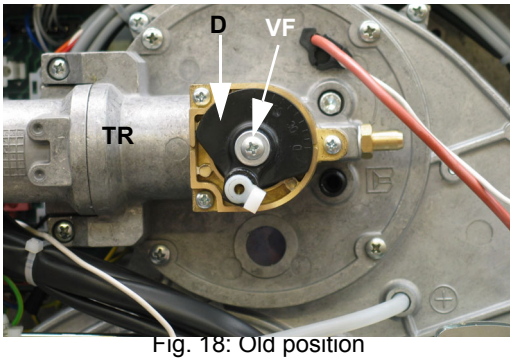

Fig. 18: Old position

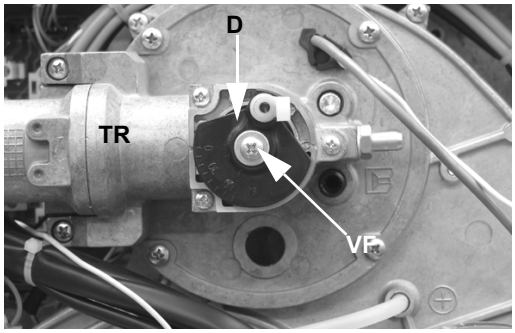

Fig. 19: New position

12 Reconnect **CR** and **CA**.
13 Retighten the screws **V1**, **V2**, **V3**, **V4**, **VT1** e **VT2**
14 Place again the rod **T** into its own position and fasten it by the platic hook **G**.

GAS TRAIN CONNECTIONS

This paragraph shows the gas train components which are included in the delivery and those which must be fitted by the customer. The diagram complies with regulations in force

ATTENTION: BEFORE EXECUTING THE CONNECTIONS TO THE GAS PIPE NETWORK, BE SURE THAT THE MANUAL CUTOFF VALVES ARE CLOSED. READ CAREFULLY THE “WARNINGS” CHAPTER AT THE BEGINNING OF THIS MANUAL.

Gas train with valves group MB-DLE (2 valves + gas filter + pressure governor) + VPS504 gas proving system

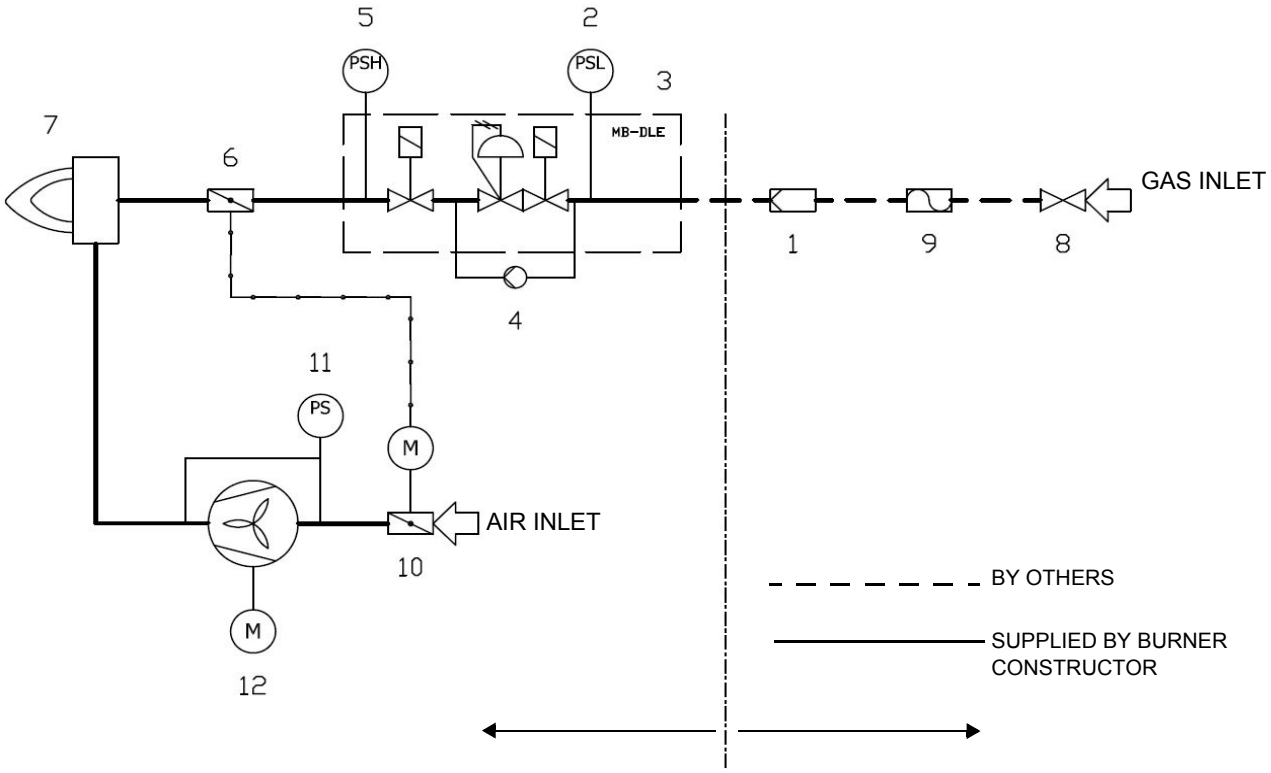

Key

	MAIN GAS TRAIN		COMBUSTION AIR TRAIN
1	Filter	10	Air damper with actuator
2	Pressure switch - PGMIN	11	Pressure switch - PA
3	Safety valve with built in gas governor	12	Draught fan with electromotor
4	Proving system		
5	Pressure switch - PGMAX(*)		
6	Butterfly valve		
7	Main burner		
8	Manual valve(*)		
9	Bellows unit(*)		

*Note: the maximum gas pressure switch can be mounted either upstream or downstream the gas valve but upstream the butterfly gas valve (see item no.4 in the scheme above).

To mount the gas train, proceed as follows:

1) in case of threaded joints: use proper seals according to the gas used;
2) fasten all the items by means of screws, according to the next diagrams, observing the mounting direction for each item.

NOTE: the bellow joint, the manual valve and the gaskets are not part of the standard supply.

The procedures of installation fo the gas valves are showed in the next paragraph.

ATTENTION: once the gas train is mounted according to the diagram, the gas proving test mus be performed, according to the procedure set by the laws in force.

ATTENTION: it is recommended to mount filter and gas valves to avoid that extraneous material drops inside the valves, during maintenance and cleaning operation of the filters (both the filters outside the valves group and the ones built-in the gas valves).

MULTIBLOC DUNGS MB-DLE 405..412

Mounting

1. Mount flange onto tube lines: use appropriate sealing agent (see Fig. 22);
2. insert MB-DLE: note position of O rings (see Fig. 22);
3. tighten screws A, B, C and D (Fig. 20 - Fig. 21), accordind to the mounting positions (Fig. 23);
4. after installation, perform leakage and functional test;
5. disassembly in reverse order.

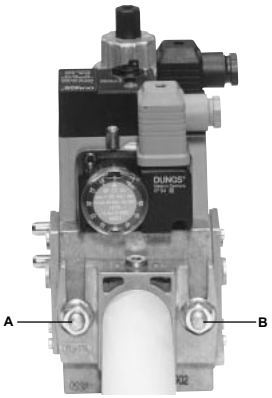

Fig. 20

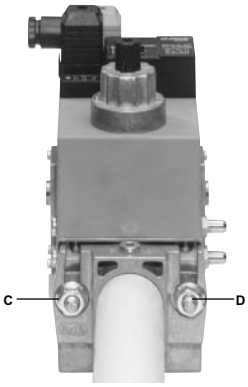

Fig. 21

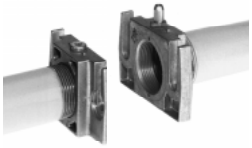

Fig. 22

MOUNTING POSITIONS

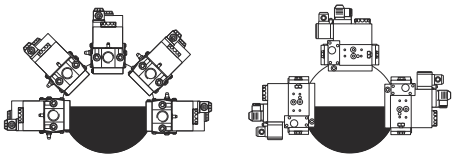

Fig. 23

MULTIBLOC DUNGS MB-DLE 415..420

Mounting

1. Loosen screws A and B **do not** unscrew (Fig. 20 - Fig. 21).
2. unscrew screws C and D (Fig. 20 - Fig. 21).
3. Remove MultiBloc between the threaded flanges (Fig. 21).
4. After mounting, perform leakage and functional tests.

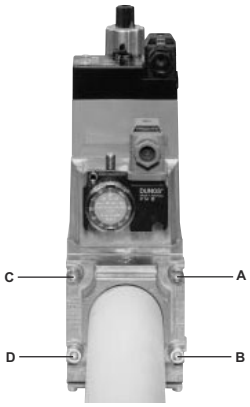

Fig. 24

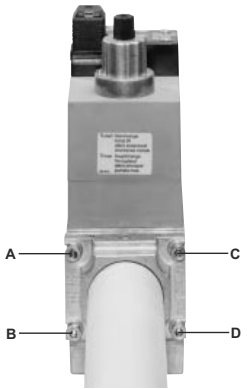

Fig. 25

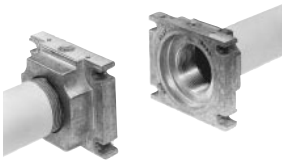

Fig. 26

MOUNTING POSITIONS

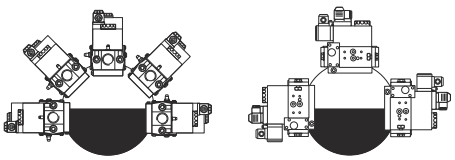

Fig. 27

Once the train is installed, connect the gas valves group plug

ATTENTION: once the gas train is mounted according to the diagram, the gas proving test mus be performed, according to the procedure set by the laws in force.

.ELECTRICAL CONNECTIONS

WARNING: if the cable that connects the thermostats and the control box should be longer than 3 meters, insert a sectioning relay following the attached electrical wiring diagram.

RESPECT THE BASIC SAFETY RULES. MAKE SURE OF THE CONNECTION TO THE EARTHING SYSTEM. DO NOT REVERSE THE PHASE AND NEUTRAL CONNECTIONS. FIT A DIFFERENTIAL THERMAL MAGNET SWITCH ADEQUATE FOR CONNECTION TO THE MAINS.

ATTENTION: before executing the electrical connections, pay attention to turn the plant's switch to OFF and be sure that the burner's main switch is in 0 position (OFF) too. Read carefully the chapter "WARNINGS", and the "Electrical connections" section.

To execute the electrical connections, proceed as follows:

1 find the pulg or the plugs, according to the model, that comes out from the burnrer:
   - ●7 pins plug for the power supply (for all models);
   - ●4 pins plug (for AB - double stage, PR-progressive, MD - fully-modulating);
   - ●3-pins plug (only for NG/LG/NGX400);
2 execute the electrical connections to the plugs, according to hte burner model (see next paragraph);
3 once all the connections are accomplished, check the fan motor direction (sse next paragraphs);
4 now the burner is ready to start up.

The burner is fitted with a bridge between terminals T6 and T8 on the 4-poles plug-TAB (external side link, male connector); if the TAB high/low flame thermostat must be connected, remove the bridge between terminals, before connecting the thermostat.

WARNING: before operating the burner, be sure all connectors are linked as shown in the diagrams.

Connectors identification

Burner power supply connector (Fig. 31 - Fig. 33 - Fig. 35) **Probe connection connector** (**fully modulating burners**, Fig. 37)	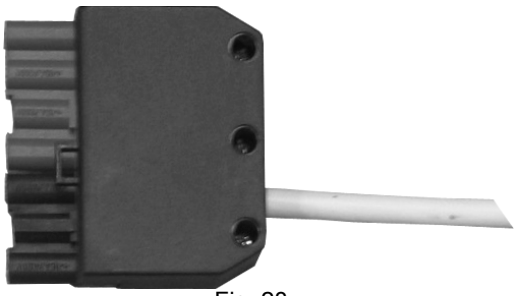 Fig. 28
HIGH/LOW flame connector(**progressive burners**, Fig. 33)	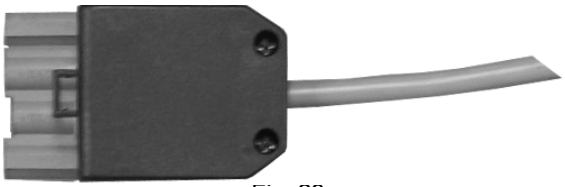 Fig. 29
Fan motor connector (NG/NGX400 **only**) (Fig. 32 - Fig. 36)	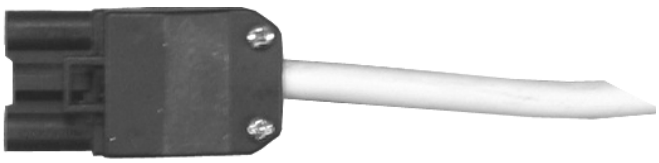 Fig. 30

Connectors wiring diagrams

- ***Single stage burner's connectors:***

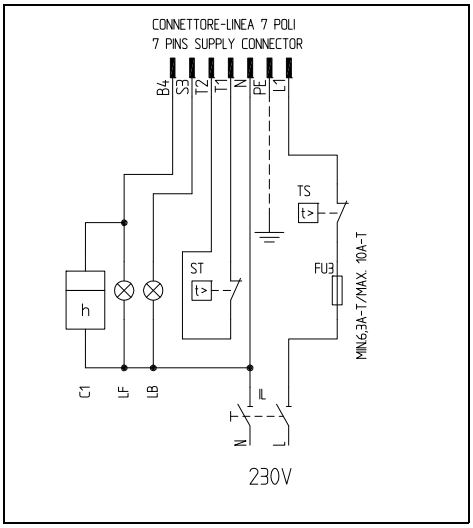

Fig. 31 - 7-pins connector

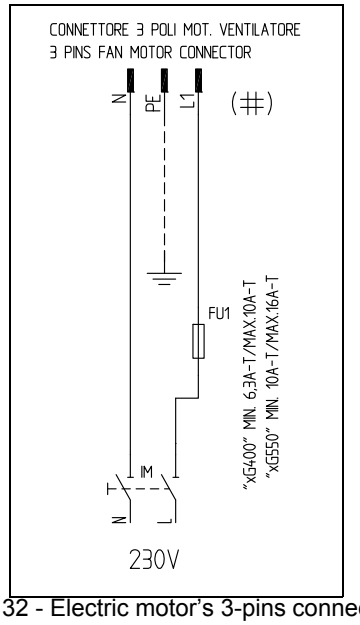

Fig. 32 - Electric motor's 3-pins connector NG/LG/NGX400

- ***Progressive burners' connectors:***

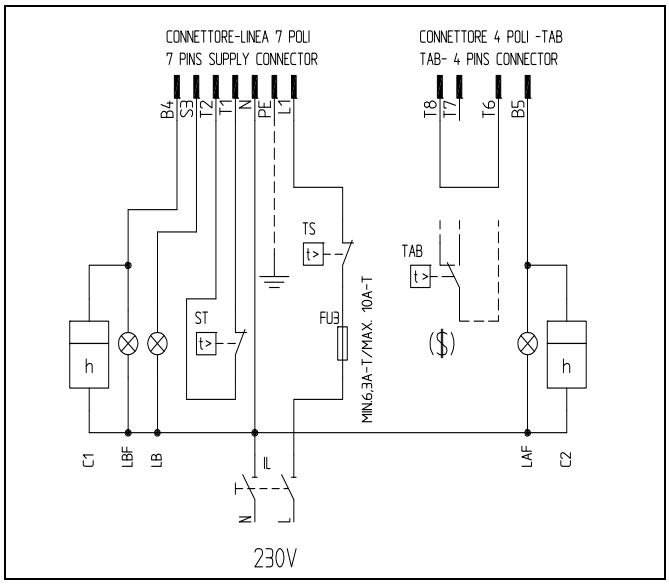

Fig. 33 **-** 7-pin and 4-pin connectors

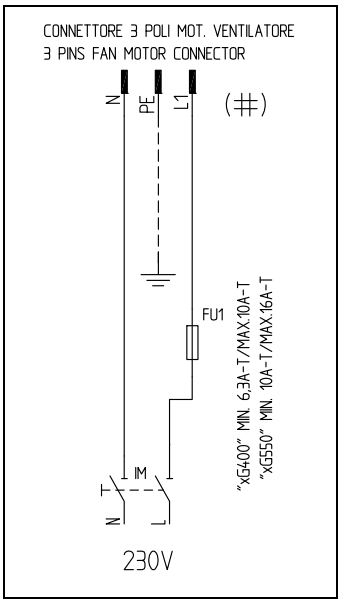

Fig. 34Electric motor's 3-pin connector for NG/LG/NGX400

Key

C1	LOW FLAME TIME METER
C2	HIGH FLAME TIME METER
FU1	FAN MOTOR LINE FUSE
FU3	LINE FUSE
IL	BURNER LINE SWITCH
IM	FAN MOTOR LINE SWITCH
KM1	FAN MOTOR CONTACTOR
LAF	BURNER IN HIGH FLAME INDICATOR LIGHT
LB	INDICATOR LIGHT FOR BURNER LOCK-OUT
LBF	BURNER IN LOW FLAME SIGNALLING LAMP
MV	FAN MOTOR
ST	THERMOSTATS O PRESSURE SWITCHES SERIE
TAB	HIGH LOW FLAME THERMOSTAT/PRESSURE SWITCH
TS	SAFETY THERMOSTAT/PRESSURE SWITCH

CONN-MOTORE FAN MOTOR CONNECTOR
CONN-LINEA BURNER POWER SUPPLY CONNNECTOR
CONN-TAB HIGH-LOW FLAME CONNECTOR

($) IF "TAB" USED REMOVE THE BRIDGE BETWEEN TERMINALS T6-T8

- ***Fully-modulating burners' connectors:***

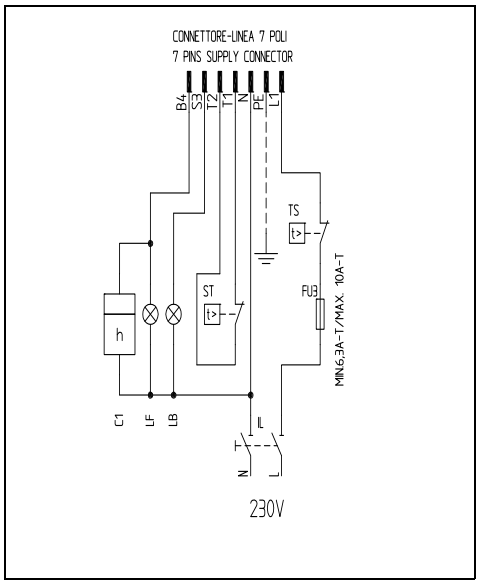

Fig. 35 - 7-pin connector

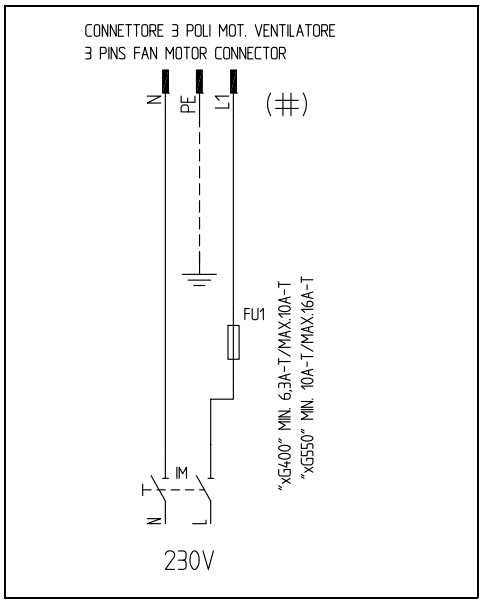

Fig. 36 - Electric motor's 3-pin connector for NG/LG/NGXG400

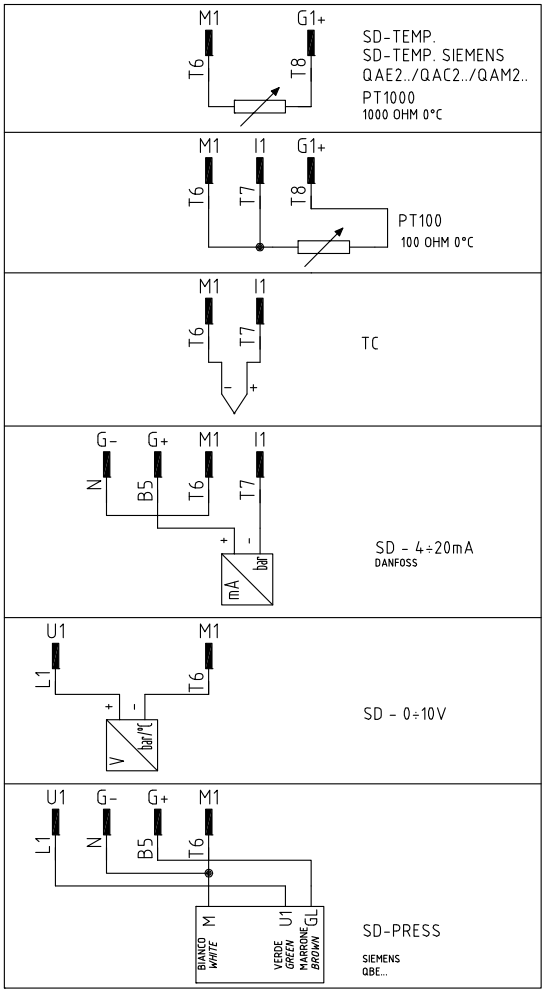

Fig. 37 - Probes connection

Key

C1	LOW FLAME TIME METER
FU1	LINE FUSE FOR FAN MOTOR
FU3	LINE FUSE
FU4	AUXILIARY FUSE
IL	BURNER LINE SWITCH
IM	FAN MOTOR LINE SWITCH
KM1	FAN MOTOR REMOTE CONTACTOR
LANDIS RWF40	MODULATION REGULATOR
LB	BURNER LOCKOUT SIGNALLING LAMP
LBF	BURNER IN LOW FLAME SIGNALLING LAMP
MV	FAN MOTOR
SD-0÷10V	VOLTAGE SIGNAL
SD-0/4÷20mA	CURENT SIGNAL
SD-PRESS	PRESSURE PROBE
SMA	MAN/AUTO SELECTOR
SMF	OPERATION SELECTOR MIN-0-MAX
ST	PRESSURE SWITCHES OR THERMOSTATS SERIE
TS	SAFETY THERMOSTAT/PRESSURE SWITCH

Power supply without neutral

If the power supply to the burner is 230V phase-phase (without the neutral wire), with the Siemens LGB2..., LMG2... or LME.. flame control device, between the terminal 2 on the board and the earth terminal, an RC Siemens RC466890660 filter must be inserted.

Key
C - Capacitor (22nF/250V)
R - Resistor (1Mohm)
(***) RC466890660 - RC Siemens filter
(Code: 2531003)

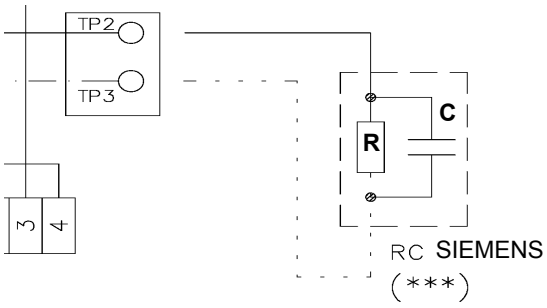

Fig. 38

Mounting the control stand

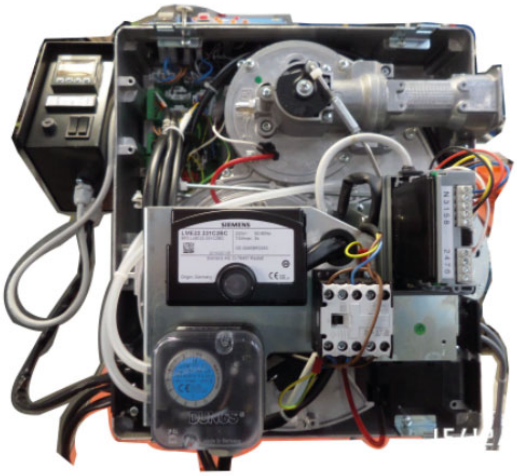

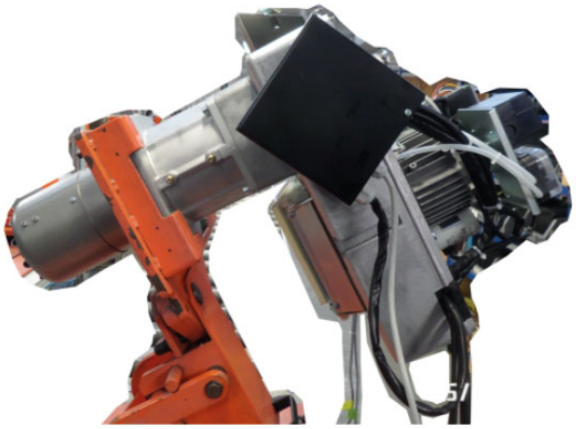

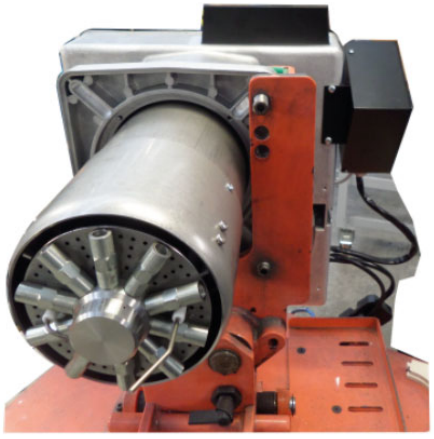

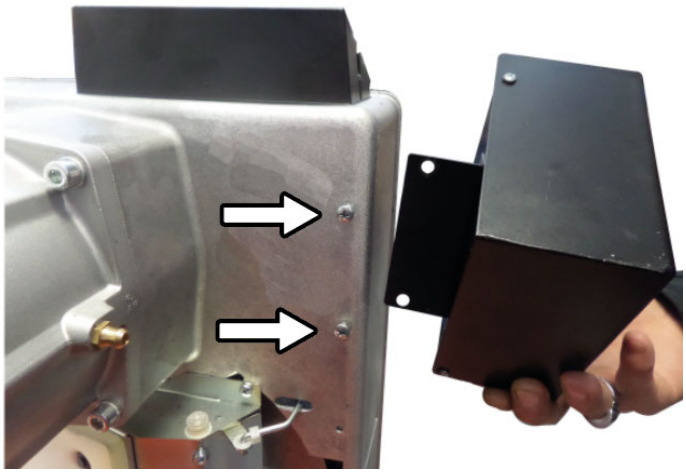

Mount as shown in the figure

PART III: OPERATION

LIMITATIONS OF USE

THE BURNER IS AN APPLIANCE DESIGNED AND CONSTRUCTED TO OPERATE ONLY AFTER BEING CORRECTLY CONNECTED TO A HEAT GENERATOR (E.G. BOILER, HOT AIR GENERATOR, FURNACE, ETC.), ANY OTHER USE IS TO BE CONSIDERED IMPROPER AND THEREFORE DANGEROUS.

THE USER MUST GUARANTEE THE CORRECT FITTING OF THE APPLIANCE, ENTRUSTING THE INSTALLATION OF IT TO QUALIFIED PERSONNEL AND HAVING THE FIRST COMMISSIONING OF IT CARRIED OUT BY A SERVICE CENTRE AUTHORISED BY THE COMPANY MANUFACTURING THE BURNER.

A FUNDAMENTAL FACTOR IN THIS RESPECT IS THE ELECTRICAL CONNECTION TO THE GENERATOR'S CONTROL AND SAFETY UNITS (CONTROL THERMOSTAT, SAFETY, ETC.) WHICH GUARANTEES CORRECT AND SAFE FUNCTIONING OF THE BURNER.

THEREFORE, ANY OPERATION OF THE APPLIANCE MUST BE PREVENTED WHICH DEPARTS FROM THE INSTALLATION OPERATIONS OR WHICH HAPPENS AFTER TOTAL OR PARTIAL TAMPERING WITH THESE (E.G. DISCONNECTION, EVEN PARTIAL, OF THE ELECTRICAL LEADS, OPENING THE GENERATOR DOOR, DISMANTLING OF PART OF THE BURNER).

NEVER OPEN OR DISMANTLE ANY COMPONENT OF THE MACHINE.

OPERATE ONLY THE MAIN SWITCH, WHICH THROUGH ITS EASY ACCESSIBILITY AND RAPIDITY OF OPERATION ALSO FUNCTIONS AS AN EMERGENCY SWITCH, AND ON THE RESET BUTTON.

IN CASE OF A BURNER SHUT-DOWN, RESET THE CONTROL BOX BY MEANS OF THE RESET PUSHBUTTON. IF A SECOND SHUT-DOWN TAKES PLACE, CALL THE TECHNICAL SERVICE, WITHOUT TRYING TO RESET FURTHER.

WARNING: DURING NORMAL OPERATION THE PARTS OF THE BURNER NEAREST TO THE GENERATOR (COUPLING FLANGE) CAN BECOME VERY HOT, AVOID TOUCHING THEM SO AS NOT TO GET BURNT.

OPERATION

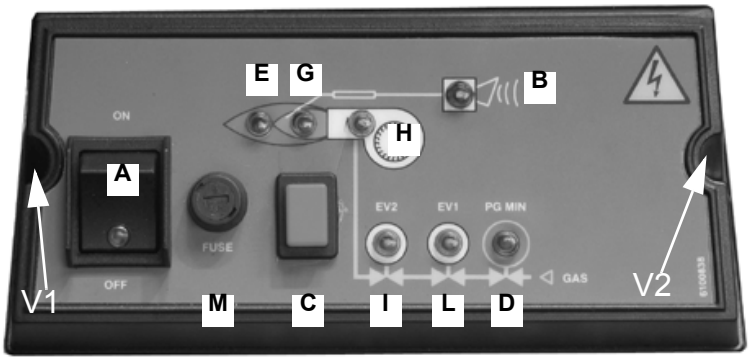

Fig. 39 - Burner's control panel

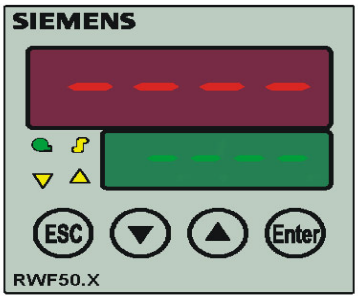

Fig. 40 - RFW50 Burner modulator

Key -

A Mains switch ON - OFF
B Lockout signaling lamp
C Reset button for flame control device (optional)
D Minimum gas pressure switch consent signaling lamp
E High flame operation signaling lamp (or air damper opening during pre-purge stage)
G Low flame operation signaling lamp
H Ignition transformer in operation signaling light
I EV2 opening signaling lamp
L EV1 opening signaling lamp
M Fuse

- Set to ON position the mains switch A on the burner electrical board front panel.
- Check the flame control device is not in the lockout position (light B on), if necessary reset it by means of the pushbutton C (reset), pushing for more than 0.5 seconds but less than 3 seconds;
- Verify that the control thermostats or pressure switches give the consent to operate to the burner.
- Check the gas supply pressure is sufficient (light D on).

Only burners provided with gas proving system: the check cycle of the leakage control device starts; the completion of this check is signalled by the light of the lamp on the device. When the valves check is finished, the start up cycle of the burner begins. In the case of a leak in a valve, the leakage control device locks and its red lamp lights.

To reset the device operate on the device pushbutton.

All burners

- When the startup cycle begins, the servocontrol drives the air damper to the maximum opening position, the fan motor starts and the pre-purgue phase begins.

During the pre-purgue phase, the complete opening of the air damper is signalled by the light E on the frontal panel of the electrical board.

- At the end of the pre-purgue phase, the air damper goes to the ignition position, the ignition transformer comes on (signalled by the light H) and 3 seconds later the solenoid valves EV1 and EV2 are energized (lights L and I on the front panel).
- Few seconds after the opening of the valves, the ignition transformer comes off and the lamp H turns off; subsequently:

Single stage burners: the burner is on at the maximum power; the lights E and G are on;

High-low flame burners: the burner is on in low flame (light G is on); 8 seconds later the high flame operation begins and the burner switches automatically to high flame (light E is on) or remains in low flame operation, depending on the plant needs.

Modulating burners: they are provided with the Siemens RWF40 modulator , placed on the burner side. As for the modulator operationm see the related manual.

GAS AND AIR FLOW RATE SETTINGS

⚠	***ATTENTION:* before starting the burner up, be sure that the manual cutoff valves are open and check that the pressure upstream the gas train complies the value quoted on paragraph "Technical specifications". Be sure that the mains switch is closed.**
	ATTENTION: During commissioning operations, do not let the burner operate with insufficient air flow (danger of formation of carbon monoxide); if this should happen, make the fuel decrease slowly until the normal combustion values are achieved.
	WARNING: NEVER LOOSE THE SEALED SCREWS! OTHERWISE, THE DEVICE WARRANTY WILL BE INVALIDATE!

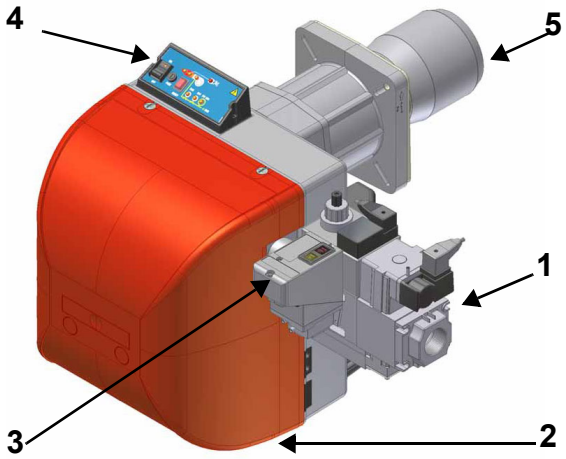

Fig. 41

Keys

1 Valve group
2 Cover
3 Gas proving system
4 Control panel
5 Blast tube

To perform the adjustments, unscrew the fixing screws and remove the burner's cover (see Fig. 41-2)

Startup Output

The start-up heat output shall not exceed 120 kW (single stage burners) or 1/3 of nominal output (double-stage, progressive or fully modulating burners). In order to comply with these requirements, burners are provided with butterfly valve and/or slow-opening safety valve. On double-stage, progressive or modulating burners, the low flame ouptut must be higher than the minimum ouptut quoted in the performance curve (page 12).

IMPORTANT! the combustion air excess must be adjusted according to the in the following chart:

Recommended combustion parameters		
Fuel	Recommended (%) CO_2	Recommended (%) O_2
Natural gas	9 ÷ 10	4.8 ÷ 3
LPG	11 ÷ 12	4.3 ÷ 2.8

Actuator

As for the setting, refer to this correspondence table.

Berger STA

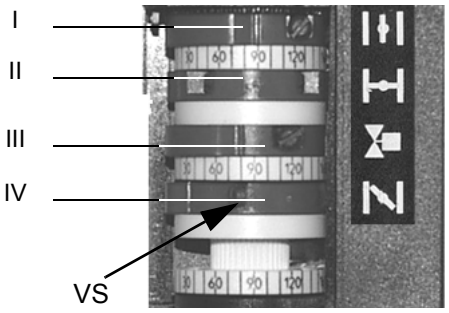

Siemens SQN30

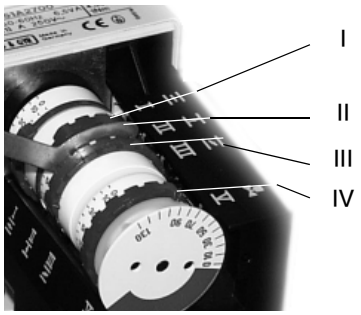

Siemens SQN72

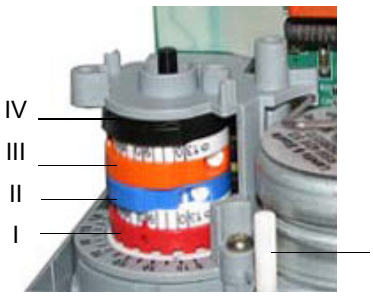

	BERGER STA	Siemens SQN30	Siemens SQN72
High flame position (set to 90°)	I	I	I (red)
Low flame and ignition position	IV	III	III (orange)
Stand-by position (set to 0°)	II	II	II (blue)
Not used	III	V	IV (black)

- .Berger STA12: On this actuator, the manual control of the air damper is not provided; the setting of the cams is carried out working with a screwdriver on the **VS** screw placed internally to the cam.. .
- Siemens SQN72: a key is provided to move cams I and IV, the other cams can be moved by means of screws. On the Siemens actuator the AUTO/MAN mode is provided (see picture).

AUTO/MAN

Adjusting the gas valves group

Multibloc MB-DLE

The multibloc unit is a compact unit consisting of two valves, gas pressure switch, pressure stabilizer and gas filter.

The valve is adjusted by means of the **RP** regulator after slackening the locking screw **VB** by a number of turns. By unscrewing the regulator **RP** the valve opens, screwing the valve closes. To set the fast opening remove cover **T**, reverse it upside down and use it as a tool to rotate screw **VR**. Clockwise rotation reduces start flow rate, anticlockwise rotation increases it.

Do not use a screwdriver on the screw **VR**!

The pressure stabilizer is adjusted by operating the screw **VS** located under the cover **C**. By screwing down the pressure is increased and by unscrewing it is reduced.

Note: the screw **VSB** must be removed only in case of replacemente of the coil.

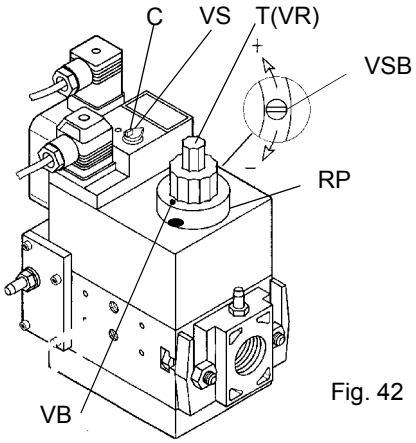

Fig. 42

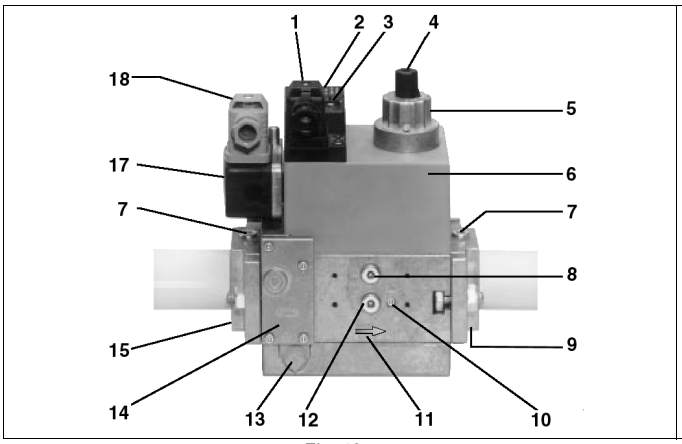

Fig. 43

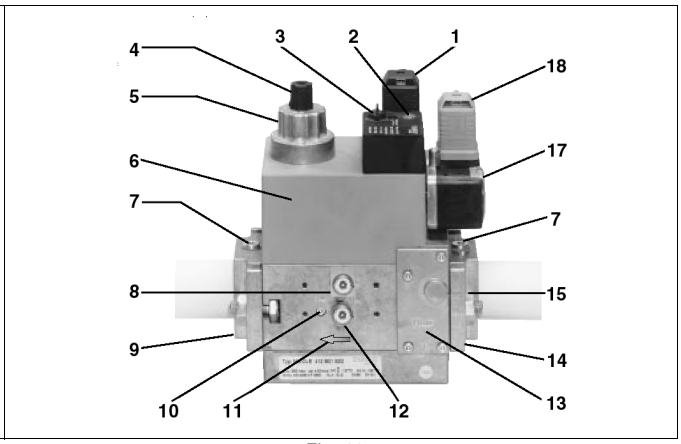

Fig. 44

Key

1 Electrical connection for valves
2 Operation display (optional)
3 Pressure governor closing tap
4 Start setting cap
5 Hydraulic brake and rate regulator
6 Coil
7 Test point connection G 1/8
8 Test point connection G 1/8 downstream of valve 1, on both sides
9 Output flange
10 Test point connection M4 downstream of valve 2
11 Gas flow direction
12 Test connection G 1/8 downstream of valve 1, on both sides
13 Vent nozzle pressure regulator
14 Filter (below cover)
15 Input flange
17 Pressure switch
18 Pressure switch electric connection

Combustion head

The burner is adjusted in the factory with the combustion head in the position that refers to the "MAX" output. The maximum output setting refers to the "fully-ahead" position of the combustion head, as far as standard models (Fig. 48), and to "fully-backward" position for low NOx burners (Fig. 47). As for "fully-ahead" position, it means that the head is placed inside the boiler, "fully-backward" position means that the head is towards the operator. As far as the reduced output operation, progressively move the combusiton head towards the "MIN" position, rotating clockwise the **VRT** screw (Fig. 45). The **ID** index shows how much the combustion head moved.

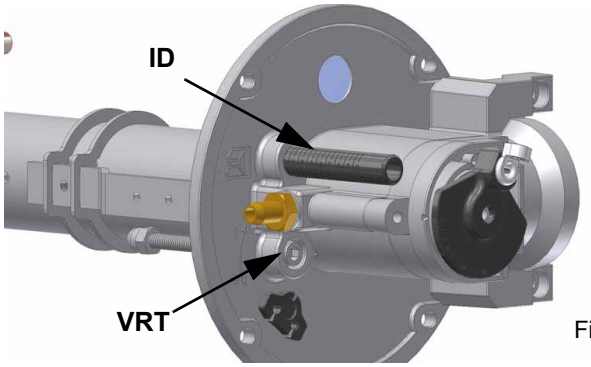

Fig. 45

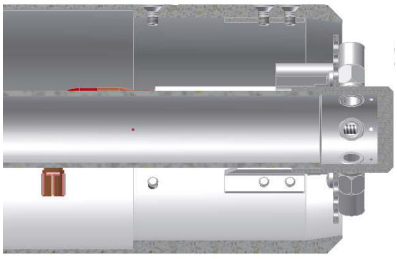

Fig. 46 - Head in "fully-ahead position"

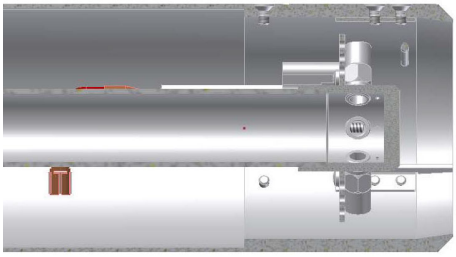

Fig. 47 - Head in "fully-backward position"

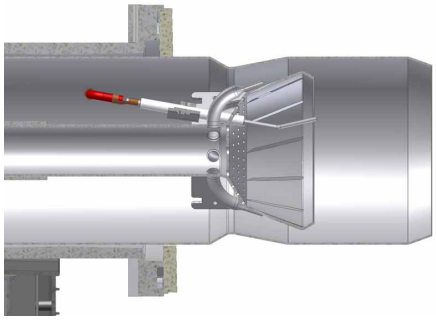

Fig. 48 - Head in "fully-ahead position"

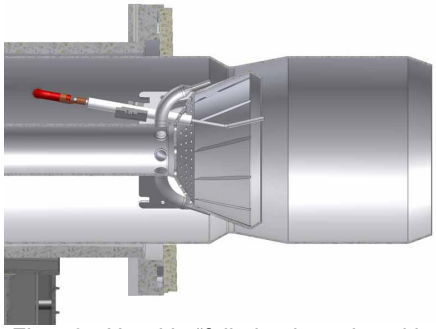

Fig. 49 - Head in "fully-backward position"

Adjustment procedure

To change the burner setting during the testing in the plant, follows the next procedure, according to the burner operation.

go on adjusting air and gas flow rates: check, continuosly, the flue gas analisys, as to avoid combustion with little air; dose the air according to the gas flow rate change following the steps quoted below;

Pressure governor is factory-set. The setting values must be locally adapted to machine conditions. Important! Follow the instructions of the burner manufacturer!

- ***Adjustements for single-stage burners***

1 remove the burner cover
2 startup the burner by turning its main switch **A** to on: if the burner locks (LED **B** on in the control panel) press the RESET button (**C**) on the control panel (Fig. 36).
3 loosen **VR** screw (see picture). Move the **ID** index towards + or -, in order to increase or decrease the air flow-rate, according to the required combustion values; Fasten the **VR** screw again.
4 Acting on the pressure stabilizer of the valves group (see “Adjusting the gas valves group” on page 38) adjust the gas flow rate

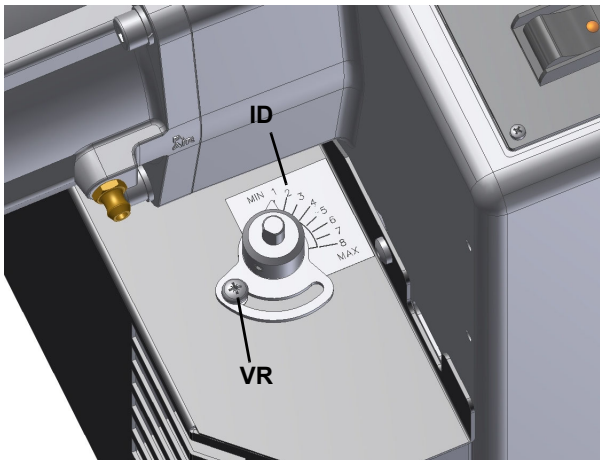

LG/NG/NGX280 - TN

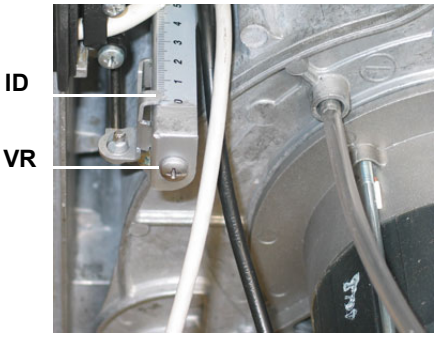

LG/NG/NGX350-400 TN

- ***Adjustements for double-stageburners mod.*** *LG/NG/NGX280*

1 remove the burner cover
2 Before starting the burner up, drive the high flame actuator microswitch matching the low flame one (in order to let the burner operates at the lowest output)to safely achieve the high flame stage
3 startup the burner by turning its main switch **A** to on: if the burner locks (LED **B** on in the control panel) press the RESET button (**C**) on the control panel (Fig. 36).
4 Move the high flame cam of the servocontrol to open the servocontrol by a few degrees. The servocontrol opens the gas throttle valve by means of the L linkage and at the same time it opens the air damper by means of the cam shown in Fig. 49
5 If necessary, after checking that the combustion complies with the recommended parameters in the table in the "Ignition power" section. Adjust the position of the air damper by acting on the slotted cam. “Startup Output”. (Fig. 49)
6 Proceed in this way until the maximum opening of the servocontrol is reached.
7 Acting on the pressure stabilizer of the valves group (see “Adjusting the gas valves group” on page 38) adjust the gas flow rate
8 Adjust the position of the combustion head if necessary (see section "Combustion Head").
9 Once the combustion point has been adjusted to a high flame, turn the burner to a low flame using the high/low thermostat. TAB of the boiler, checking the combustion point by point.
10 To eventually change the gas flow rate, set at step 6, slacken the screw **V1** (see picture) and set the opening angle of the buttefly valve rotating the round plate **C** by means of the screw **V3** (turn clockwise to decrease the gas rate or counterclockwise to increase it). The index **S** shows the opening angle of the butterfly valve.
11 Check combustion and burner gas flow in high flame again.

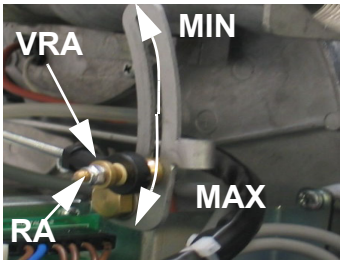

Fig. 49

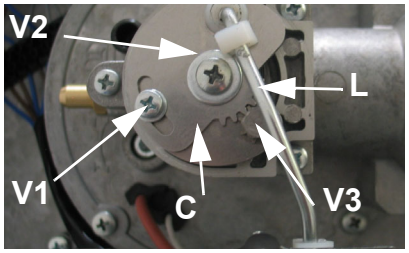

Fig. 50

Note: If it should be necessary to adjust the rating of the burner in low flame operation, once all the adjustments are accomplished, act on the related cam of the actuator. Then, check the gas rate and, eventually, repeat previous steps.

- ***Progressive or fully-modulating burners***

1 Before starting the burner up, drive the high flame actuator microswitch matching the low flame one (in order to let the burner operates at the lowest output) to safely achieve the high flame stage.

2 startup the burner by turning its main switch **A** to on: if the burner locks (LED **B** on in the control panel) press the RESET button (**C**) on the control panel (Fig. 36).

3 drive the burner to high flame stage, by means fo the thermostat **TAB** (high/low flame thermostat - see Wiring diagrams), as far as fully-modulating burners, see related paragraph.

4 Then move progressively the microswitch to higher values until it reaches the high flame position; always check the combustion values and eventually adjusting the gas by means of the valves group stabiliser.

To adjust the air flow rate, follow this procedure: find the **V** screw on the adjusting cam **SV** (see next picture), matching with the bearings that move along the foil and related to the servocontrol position.unscrew the **V** srew to increase the air folw rate, unscrew to decrease it

To adjust the gas flow rate, act on the pressure stabilizer of the valves group (see “Adjusting the gas valves group” on page 38)

5 Once the high flame position is reached, open the gas valve completely. To reach the required flow rate act on the stabilizer

6 Adjust, if necessary, the position of the combustion head(see paragraph)

7 Check combustion parameters and, if necessary, adjust the air flow rate or gas pressure as described above.

8 once the maximum flow rate is fixed, shortcircuit for a while, the thermostat **TAB** T6 and T7 terminals (see pag. 45). As far as the fully-modulating models, see next paragraph. The actuator will move towards the low flame position; then remove the bridge;

9 then adjust the screw **V** related to that position;

10 repeat all these instructions for all the actuator stroke, in order to define the foil shape.

Note: If it should be necessary to adjust the rating of the burner in low flame, work on the corresponding cam of the actuator. After this operation, check the gas rate and verify the combustion values. In case of lack or excess of air, work on the screws **V** of the adjusting cam matching the setting point of the air rate in low flame; unscrew to increase the air rate or screw to decrease it.

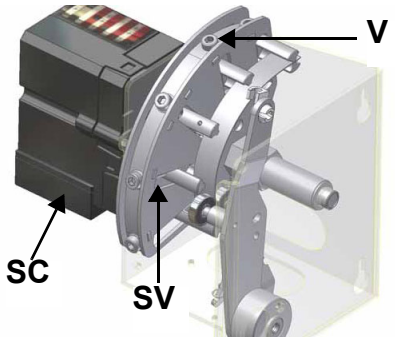

DOUBLE-STAGE-PROGRESSIVE-FULLY-MODULATING

Fully modulating burners

To adjust the fully-modulating burners, use the **CMF** switch on the burner control panel (see next picture), instead of the **TAB** thermostat as described on the previous paragraphs about the progressive burners. Go on adjusting the burner as described before, paying attention to use the CMF switch intead of **TAB**.

The **CMF** position sets the oprating stages: to drive the burner to the high-flame stage, set CMF=1; to drive it to the low-flame stage, set CMF=2.

To move the adjusting cam set CMF=1 or 2 and then CMF=0.

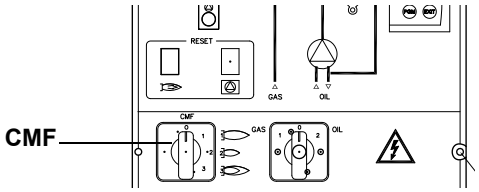

CMF = 0 stop at the current position
CMF = 1 high flame operation
CMF = 2 low flame operation
CMF = 3 automatic operation

Gas Proving System VPS504 (Option)

The VPS504 check the operation of the seal of the gas shut off valves. This check, carried out as soon as the boiler thermostat gives a start signal to the burner, creates, by means of the diaphragm pump inside it, a pressure in the test space of 20 mbar higher than the supply pressure.

To install the DUNGS VPS504 gas proving system on the MD-DLE valves group, proceed as follows:

1 turn off gas supply.;
2 Switch off power supply.
3 remove the Multibloc's screw plugs (Fig. 52-A);
4 iInsert sealing rings (10,5 x 2,25) into VPS 504 (Fig. 53-B, Fig. 52-B)
5 Torque screws 3, 4, 5, 6 (M4 x16) Fig. 52-C

Only use screws with metric thread on reassembly (modification, repair).

6 On completion of work, perform a leak and functional test.

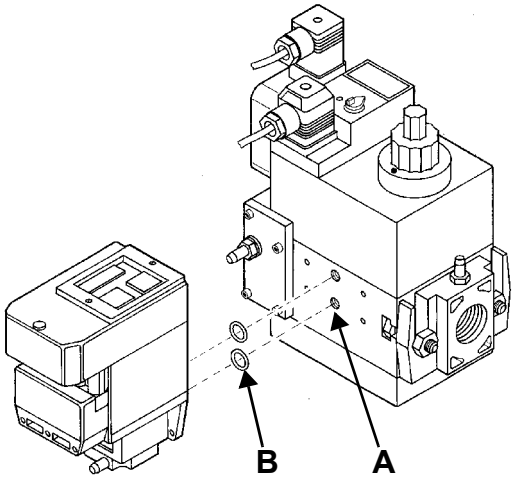

Fig. 52

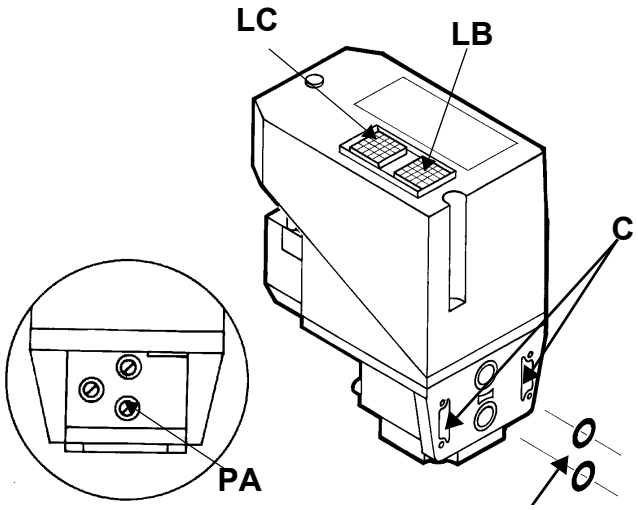

Fig. 53

When wishing to monitor the test, install a pressure gauge ranged to that of the pressure supply point **PA** (Fig. 53). If the test cycle is satisfactory, after a few seconds the consent light **LC** (yellow) comes on. In the opposite case the lockout light **LB** (red) comes on. To restart it is necessary to reset the appliance by pressing the illuminated pushbutton **LB**.

Calibration of air and gas pressure switches

The **air pressure switch** locks the control box if the air pressure is not the one requested. If it happens, unlock the burner by means of the control box unlock pushbutton, placed on the burner control panel.

The **gas pressure switches** check the pressure to avoid the burner operate when the pressure value is not in the requested pressure range.

Calibration of air pressure switch (only for single stage burners)

Calibration is carried out as follows:

- Remove the transparent plastic cap.
- Once air and gas setting have been accomplished, startup the burner.

- While the burner is operating, rotate slowly and clockwise the adjusting ring nut **VR**, until the burner locks; read the pressure value on the scale of the pressure switch and set it again to a value reduced by the 15%.
- Repeat the start-up cycle and check the burner runs properly.
- Refit the transparent plastic cover on the pressure switch.

Calibration of air pressure switch (double-stage, progressive and fully-modulating)

To calibrate the air pressure switch, proceed as follows:

- Remove the transparent plastic cap.
- Once air and gas setting have been accomplished, startup the burner.
- During the pre-purge phase o the operation, turn slowly the adjusting ring nut **VR** in the clockwise direction until the burner lockout, then read the value on the pressure switch scale and set it to a value reduced by 15%.
- Repeat the ignition cycle of the burner and check it runs properly.
- Refit the transparent plastic cover on the pressure switch.

Calibration of low gas pressure switch

As for the gas pressure switch calibration, proceed as follows:

- Be sure that the filter is clean.
- Remove the transparent plastic cap.
- While the burner is operating at the maximum output, test the gas pressure on the pressure port of the minimum gas pressure switch.
- Slowly close the manual cutoff valve (placed upstream the pressure switch, see gas train installation diagram), until the detected pressure is reduced by 50%. Pay attention that the CO value in the flue gas does not increase: if the CO values are higher than the limits laid down by law, slowly open the cutoff valve as to get values lower than these limits.
- Check that the burner is operating correctly.
- Clockwise turn the pressure switch adjusting ring nut (as to increase the pressure value) until the burner stops.
- Slowly fully open the manual cutoff valve.
- Refit the transparent plastic cover on the pressure switch.

Fig. 54

Adjusting the maximum gas pressure switch (when provided)

To calibrate the maximum pressure switch, proceed as follows according to its mounting position:

1 remove the pressure switch plastic cover;

2 if the maximum pressure switch is mounted upstreaam the gas valves: measure the gas pressure in the network, when flame is off; by means of the adjusting ring nut **VR**, set the value read, increased by the 30%.

3 if the maximum pressure switch is mounted downstream the “gas governor-gas valves” group and upstream the butterfly valve: light the burner, adjust it according to the procedure in the previous paragrph. Then, measure the gas pressure at the operating flow rate, downstream the “gas governor-gas valves” group and upstream the butterfly valve; by means of the adjusting ring nut **VR**, set the value read on step 2, increased by the 30%;

4 replace the plastic cover.

PART IV: MAINTENANCE

At least once a year carry out the maintenance operations listed below. In the case of seasonal servicing, it is recommended to carry out the maintenance at the end of each heating season; in the case of continuous operation the maintenance is carried out every 6 months.

WARNING: ALL OPERATIONS ON THE BURNER MUST BE CARRIED OUT WITH THE MAINS DISCONNECTED AND THE FUEL MANAUL CUTOFF VALVES CLOSED!

ATTENTION: READ CAREFULLY THE "WARNINGS" CHAPTER AT THE BEGINNIG OF THIS MANUAL.

ROUTINE MAINTENANCE

- Clean and examining the gas filter cartdrige, if necessary replace it (Fig. 55 on).
- Removal, examination and cleaning of the combustion head.
- Check the ignition and detection electrodes, clean and adjust if necessary (see Fig. 66). In case of doubr, check the detection current according to the schemes in Fig. 65.
- Cleaning and greasing of sliding and rotating parts.

ATTENTIONwhen servicing, if it was necessary to disassemble the gas train parts, remember to execute the gas proving test, once the gas train is reassembled, according to the procedure imposed by the law in force.

Removing the filter in the MULTIBLOC DUNGS MB-DLE 405..412

- Check the filter at least once a year!
- Change the filter if the pressure difference between pressure connection 1 and 3 (Fig. 55-Fig. 56)is $\Delta p > 10$ mbar.
- Change the filter if the pressure difference between pressure connection 1 and 3 (Fig. 55-Fig. 56) is twice as high compared to the last check.

You can change the filter without removing the fitting.

1 Interrupt the gas supply closing the on-off valve.
2 Remove screws 1 ÷ 4 using the Allen key n. 3 and remove filter cover 5 in Fig. 57.
3 Remove the filter 6 and replace with a new one.
4 Replace filter cover 5 and tighten screws 1 ÷ 4 without using any force and fasten.
5 Perform leakage and functional test, $p_{max.}$ = 360 mbar.
6 Pay attention that dirt does not fall inside the valve.

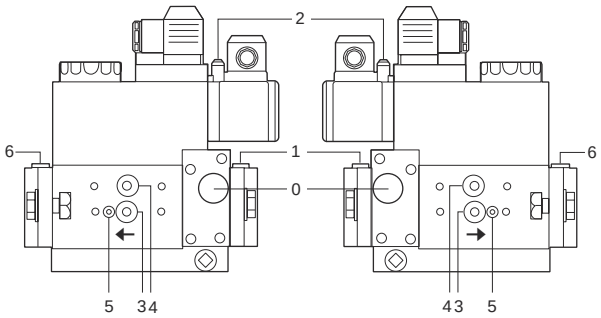

Fig. 55

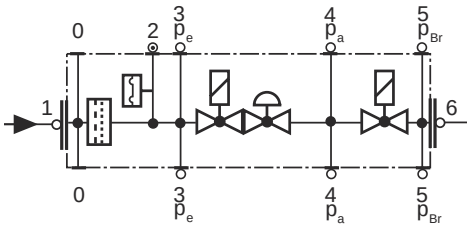

Fig. 56

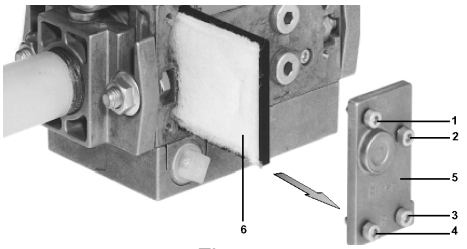

Fig. 57

Removing the filter in the MULTIBLOC DUNGS MB-DLE 415 - 420 B01 1" 1/2 - 2"

- Check the filter at least once a year!
- Change the filter if the pressure difference between pressure connection 1 and 2 (Fig. 58-Fig. 59) $\Delta p > 10$ mbar.
- Change the filter if the pressure difference between pressure connection 1 and 2 (Fig. 58-Fig. 59) is twice as high compared to the last check.

You can change the filter without removing the fitting.

1 Interrupt the gas supply closing the on-off valve.
2 Remove screws 1 ÷ 6 (Fig. 60).
3 Change filter insert.
4 Re-insert filter housing, screw in screws 1 ÷ 6 without using any force and fasten.
5 Perform leakage and functional test, $p_{max.}$ = 360 mbar.
6 Pay attention that dirt does not fall inside the valve.

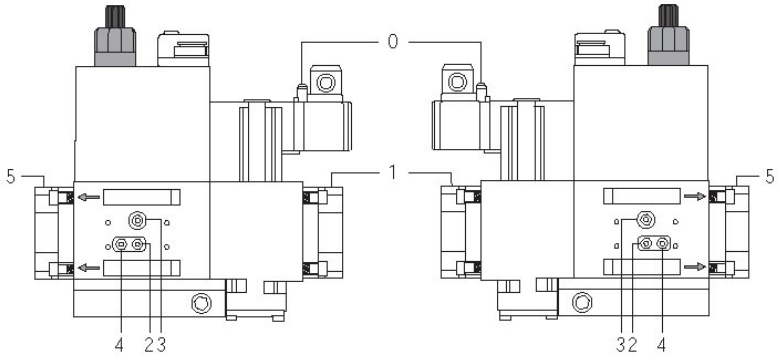

Fig. 58

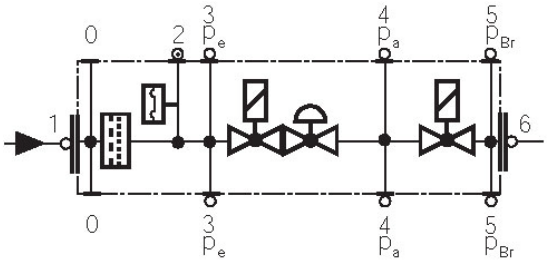

Fig. 59

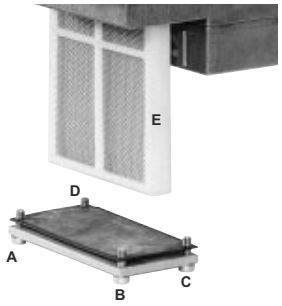

Fig. 60

Removing and cleaning the combustion head

1 By means of the plastic hook **G**, unlock the rod **T** (Fig. 61) which drives the butterfly valve (Fig. 61 and Fig. 62), to disconnect it from its seat.

2 Remove the screws **V1**, **V2**, **V3**, **V4** and the screws **S1** and **S2** (Fig. 61).

3 Disconnect the ignition cable **CA** from the ignition transformer (Fig. 63).

4 Disconnect the connector **CR** (Fig. 64).

CAUTION: during the assembling phase, before tightening screws V1, V2, V3, V4, mount and tighten screws S1 and S2.

To remove the head, the operator must pull it towards himself. Once the combustione head is removed, check that the air and gas holes are not obstructed (Fig. 64 - **H**). Clean the combustion head by a compressed air blow or, in case of scale, scrape it off by a scratchbrush.

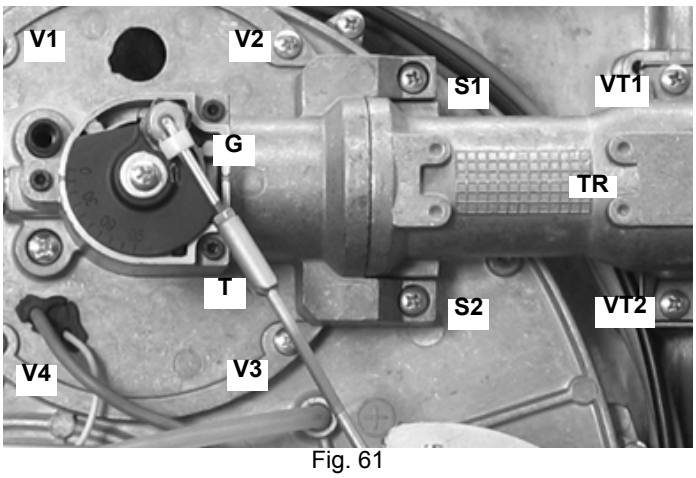

Fig. 61

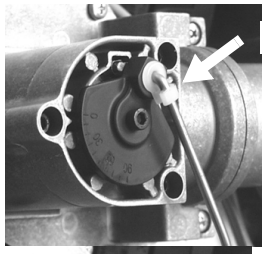

LOCKED

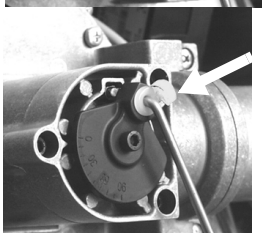

UNLOCKED

Fig. 62

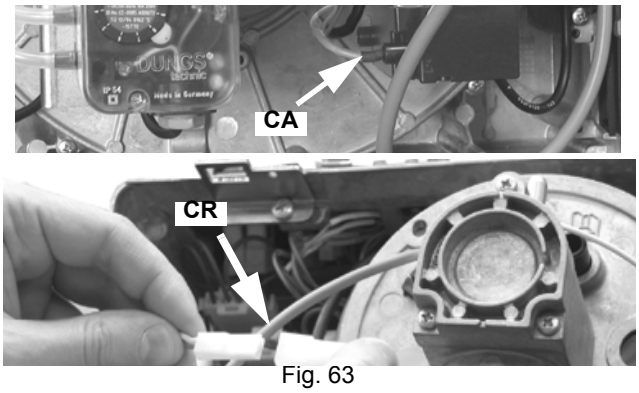

Fig. 63

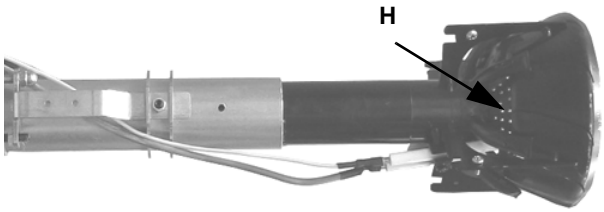

Fig. 64

Checking the detection current

If the burner locks, execute the following inpesctions. To measure the detection signals refer to the diagrams in Fig. 65 . If the signal is less than the value shown, check the position of the detection electrode, the electrical contacts and if necessary replace the detection electrode.

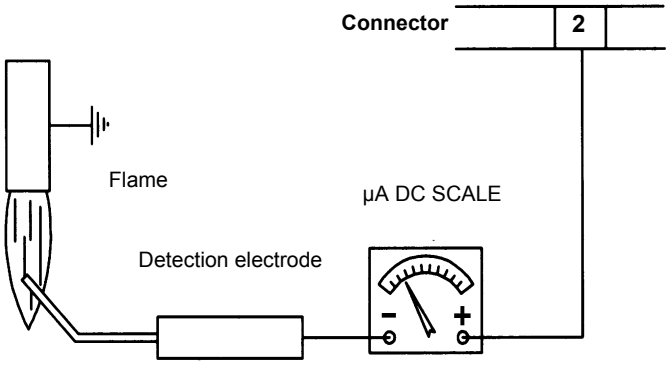

Fig. 65

Control box	Minimum detection signal
Siemens LME21-22	3 µA

Flame supervision with QRA2 + ACQ3.1A27.. (just for LME2x …)

Device	Flame detector	Measure at the detector UV QRA…
Siemens LME2x	QRA2	200 µA

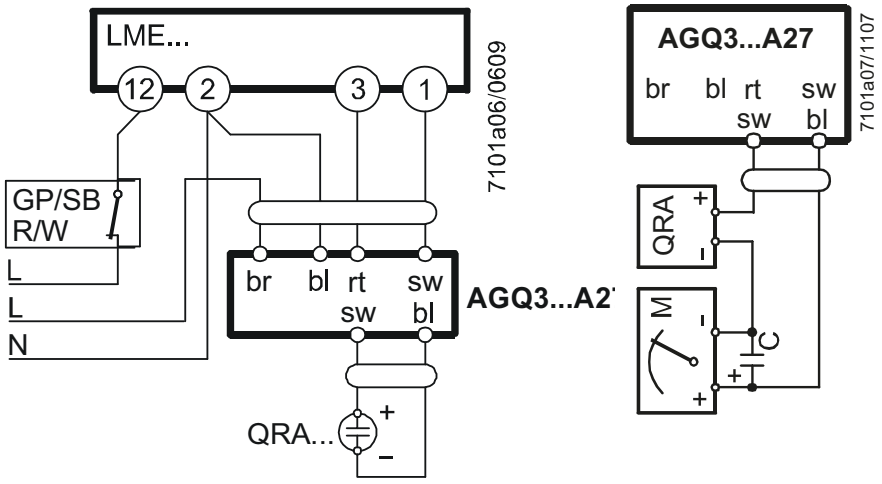

Adjusting the electrodes position

ATTENTION: avoid the ignition and detection electrodes to get in touch with metallic parts (blast tube, head, etc.), otherwise the boiler's operation would be compromised. Check the electrodes position after any intervention on the combustion head.

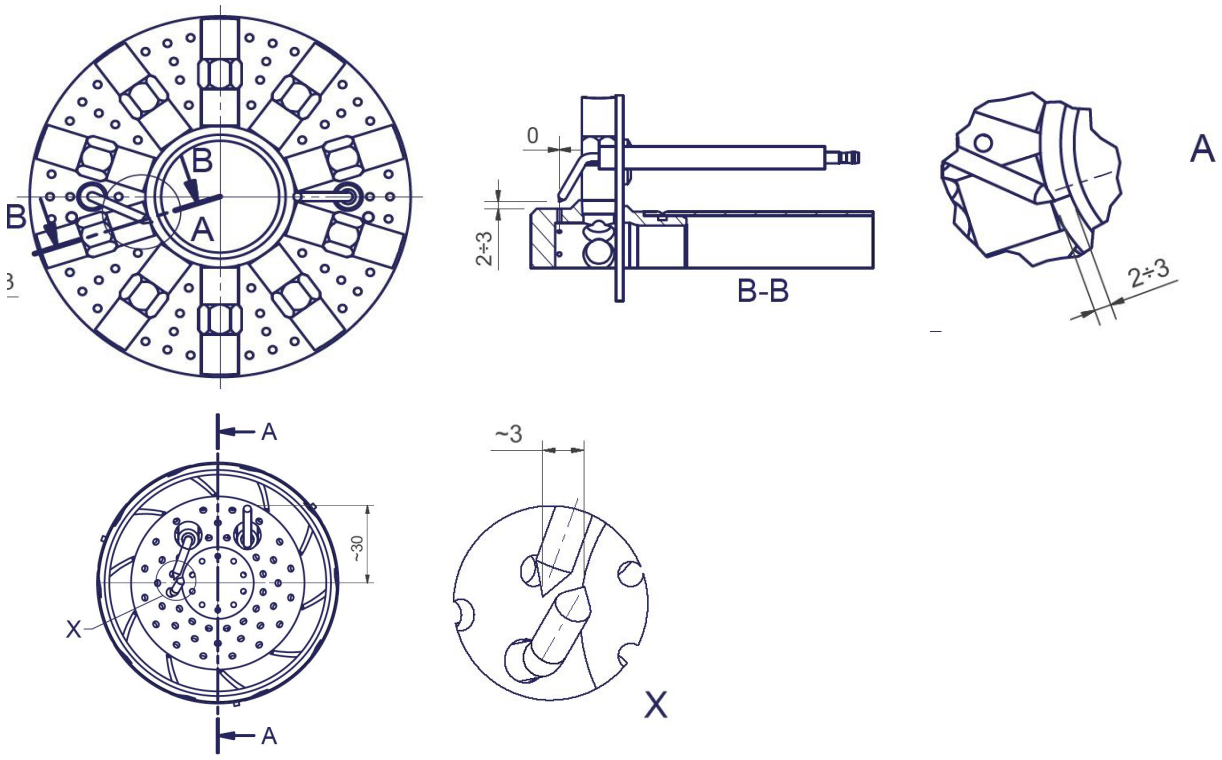

Seasonal stop

To stop the burner in the seasonal stop, proceed as follows:

1 turn the burner main switch to 0 (Off position)
2 disconnect the power mains
3 close the fuel valve of the supply line

Burner disposal

In case of disposal, follow the instructions according to the laws in force in your country about the "Disposal of materials".

WIRING DIAGRAMS

Wiring diagrams (see attached document)

LG/NG/NGX 280 Single stage - Eletric wiring diagrams - SE01-530
LG/NG/NGX 280 Double stage - Progressive - Eletric wiring diagrams - SE18-103
LG/NG/NGX 350-400 Eletric wiring diagrams - SE18-163, SE18-057

TROUBLESHOOTING

CAUSE	TROUBLE											
	THE BURNER DOESN'TSTART	CONTINUE WITH PRE-PURGE	DOESN'T START AND LOCK-OUT	DOESN'T START AND REPEATS THE CYCLE	STARTS AND REPEATS THE CYCLE	STARTS AND LOCK-OUTB	THE FLAME MONITOR DEVICE DOESN'T GIVECONSENT TO START	DOESEN'T SWITCH TO HIGH FLAME	DOESEN'T RETURN IN LOW FLAME	HE SERVO CONTROL IS LOCK AND VIBRATE	LOCK-OUT DURING OPERATION	TURNS OF AND REPEATS CYCLE DURING OPERATION
MAIN SWITCH OPEN	●											
LACK OF GAS	●			●								
MAXIMUM GAS PRESSURE SWITCH DEFECTIVE (IF PROVIDED)	●		●									
THERMOSTATS/PRESSURE SWITCHES DEFECTIVE	●			●								●
OVERLOAD TRIPPED INTERVENTION	●											
AUXILIARIES FUSE INTERRUPTED	●											
CONTROL BOX FAULTY	●	●	●			●					●	
DEFECTIVE SERVOCONTROL (IF PROVIDED)	●	●	●				♦					
AIR PRESSURE SWITCH FAULT OR BAD SETTING	●					●	●				●	
MINIMUM GAS PRESSURE SWITCH DEFECTIVE OR GAS FILTER DIRTY	●			●	●		●					●
IGNITION TRANSFORMER FAULT			●									
IGNITION ELECTRODES BAD POSITION			●									
DETECTION ELECTRODE BAD POSITION						●					●	
BUTTERFLY VALVE BAD SETTING			●			●						
DEFECTIVE GAS GOVERNOR			●	●	●							●
GAS VALVE DEFECTIVE			●									
BAD CONNECTION OR DEFECTIVE HIGH/LOW FLAME THERMOSTAT OR PRESSURE SWITCH (IF PROVIDED)							♦	●	●	♦		
WRONG SETTING SERVO CONTROL CAM							l	l	l			
UV PROBE DIRTY OR DEFECTIVE (IF PROVIDED)			l			l					l	
PHASE-NEUTRAL INVERTED						s						
PHASE-PHASE SUPPLY OR PRESENCE OF VOLTAGE ON THE NEUTRAL CONDUCTOR(*)						s						

l = with any control box;

s = with only LGB2../LMG2../LME11/LME2..

(*) In such cases, insert the circuit SIEMENS “RC466890660” ()See chapter “Electrical connections”)

VERSIONE MONOSTADIO "TN"
"TN" SINGLE-STAGE VERSION

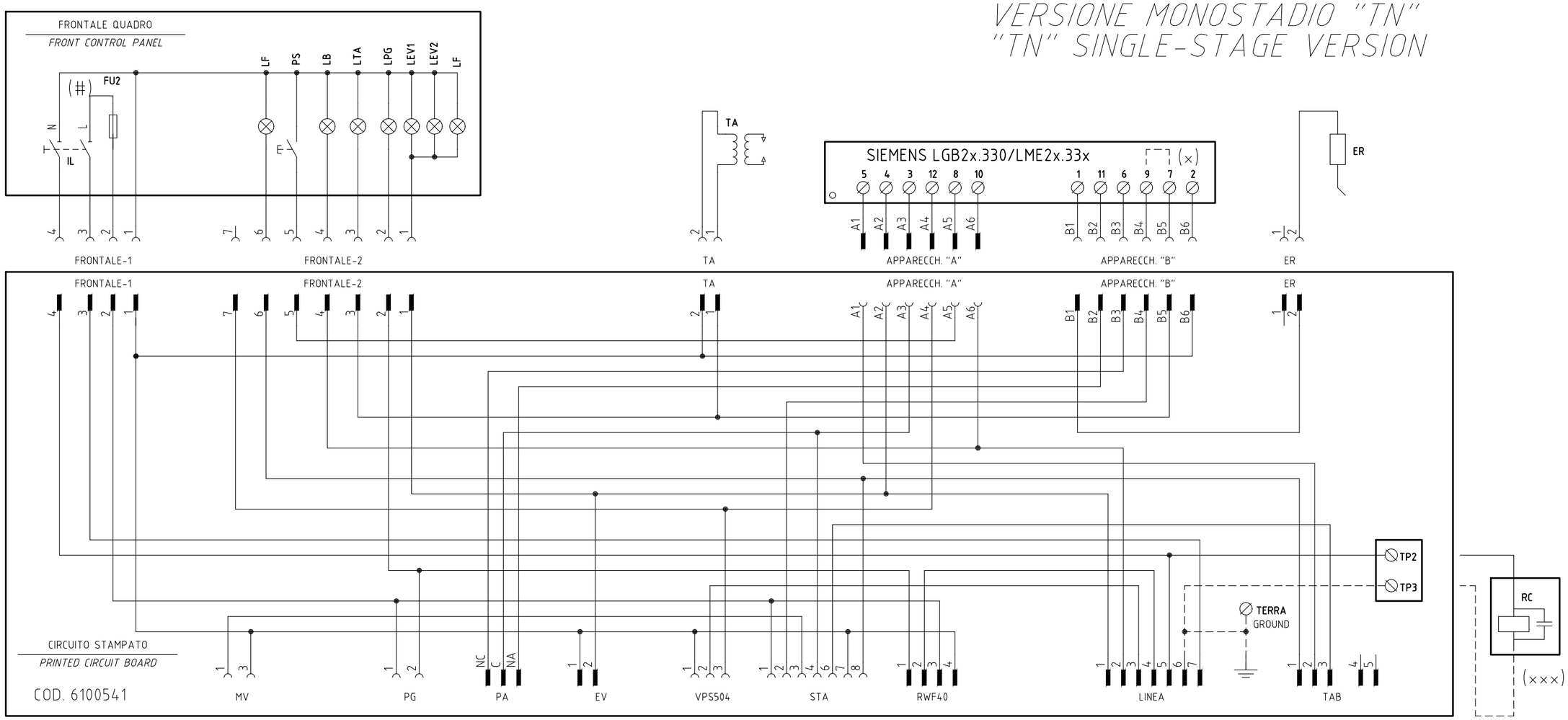

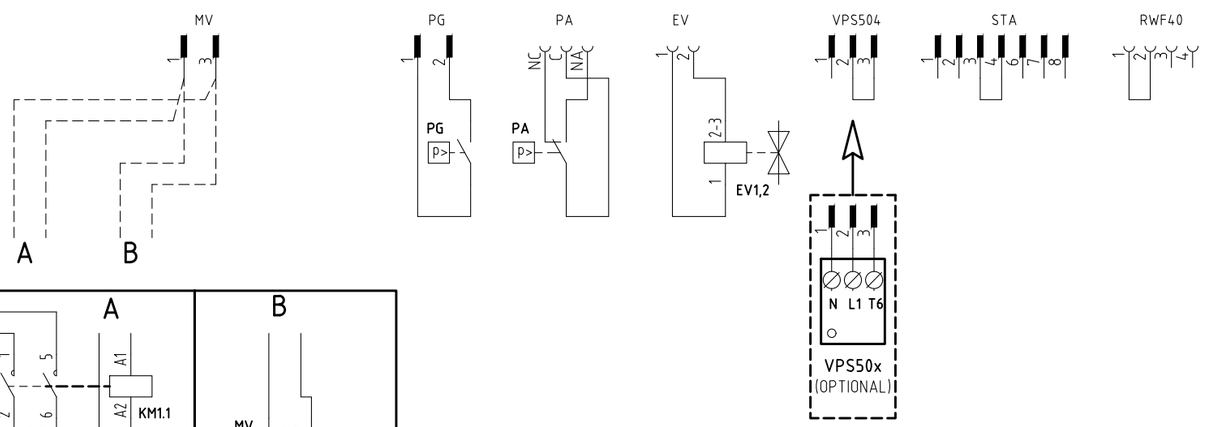

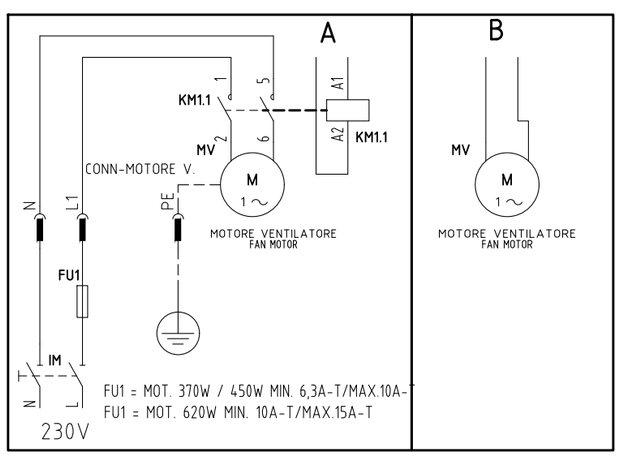

(#) MOTORE VENTIL. VERSIONE [A], FU2 = 6,3A F; MOTORE VENTIL. VERSIONE [B], FU2 = 10A F
FAN MOTOR VERSION [A], FU2= 6,3 A F;
FAN MOTOR VERSION [B], FU2= 10 A F

(x) FARE PONTE TRA I MORSETTI 7 E 9 SOLO CON LGB21.330
CONNECTION BETWEEN TERMINALS 7 AND 9 WITH LGB21.330 ONLY

(xxx) SOLO CON ALIMENTAZIONE ELETTRICA SENZA NEUTRO
WITH ELECTRIC SUPPLY WITHOUT NEUTRAL VERSION ONLY

Data 19/10/2010		PREC.	FOGLIO
Revisione 06		/	1
Dis. N. 18 – 0163		SEGUE	TOTALE
		2	5

VERSIONE ALTA-BASSA FIAMMA "AB" / PROGRESSIVO "PR"
"AB" HIGH-LOW / "PR" PROGRESSIVE VERSION

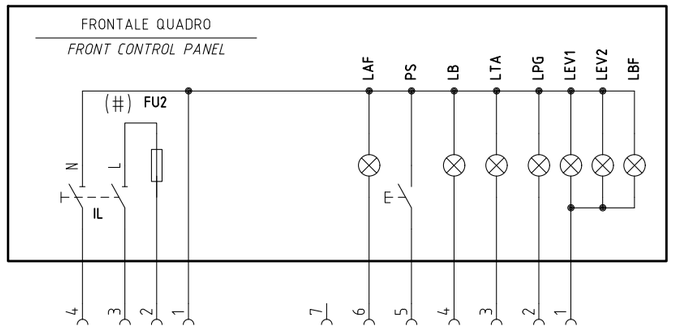

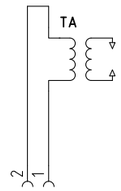

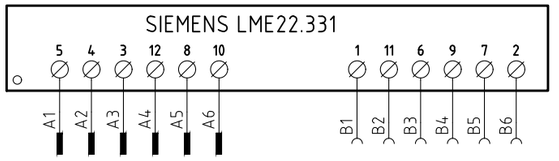

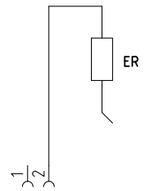

SERVOCOMANDO SERRANDA ARIA
AIR DAMPER ACTUATOR
STA13B0.36/83N30L

I	ALTA FIAMMA *HIGH FLAME*
II	SOSTA *STAND-BY*
IV	BASSA FIAMMA *LOW FLAME*
III	NON USATA *NOT USED*

SERVOCOMANDO SERRANDA ARIA
AIR DAMPER ACTUATOR
SIEMENS SQN72.xA4A20

I (ROSSO) *I (RED)*	ALTA FIAMMA *HIGH FLAME*
II (BLU) *II (BLUE)*	SOSTA *STAND-BY*
III (ARANCIO) *III (ORANGE)*	BASSA FIAMMA *LOW FLAME*
IV (NERO) *IV (BLACK)*	NON USATA *NOT USED*

FRONTALE-1 | FRONTALE-2 | TA | APPARECCH. "A" | APPARECCH. "B" | ER

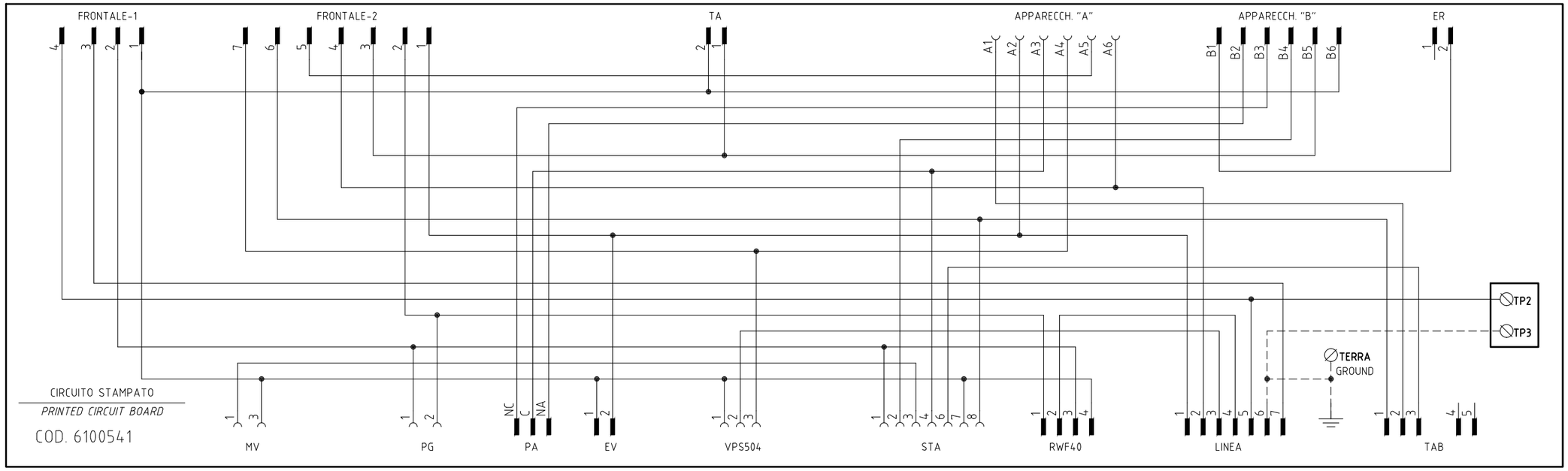

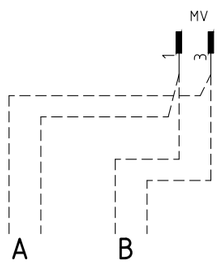

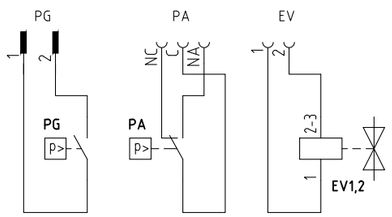

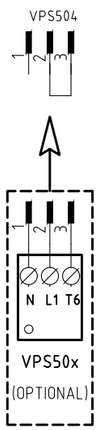

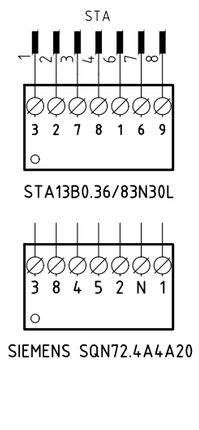

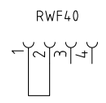

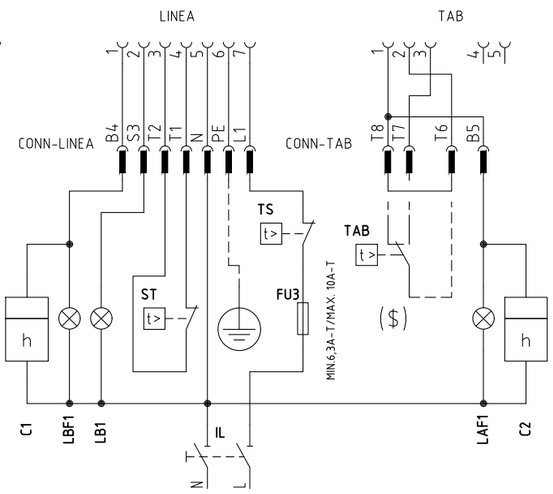

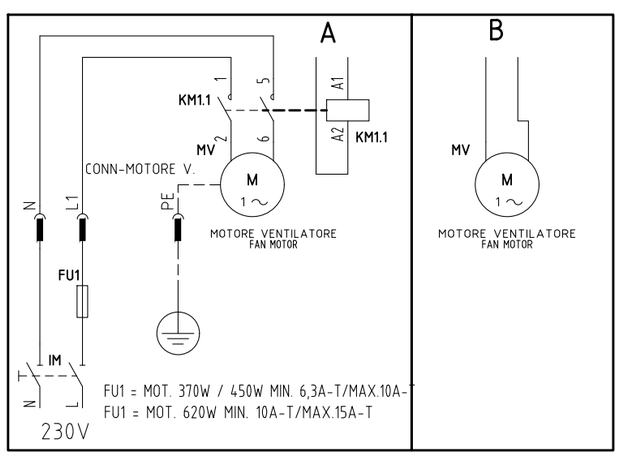

(#) MOTORE VENTIL. VERSIONE [A], FU2 = 6,3A F; MOTORE VENTIL. VERSIONE [B], FU2 = 10A F
FAN MOTOR VERSION [A], FU2= 6,3 A F;
FAN MOTOR VERSION [B], FU2= 10 A F

(×××) SOLO CON ALIMENTAZIONE ELETTRICA SENZA NEUTRO
WITH ELECTRIC SUPPLY WITHOUT NEUTRAL VERSION ONLY

($) SE USATO "TAB", TOGLIERE IL PONTE TRA I MORSETTI T6-T8
IF USED "TAB", REMOVE THE BRIDGE BETWEEN TERMINALS T6-T8

Data 19/10/2010		PREC. 1	FOGLIO 2
Revisione 06			
Dis. N. 18 – 0163		SEGUE 3	TOTALE 5

VERSIONE MODULANTE "MD"
"MD" MODULATING VERSION

FRONTALE QUADRO
FRONT CONTROL PANEL

(#) FU2 — N — L — IL — LAF — PS — LB — LTA — LPG — LEV1 — LEV2 — LBF

TA

SIEMENS LME22.331
5 4 3 12 8 10 — 1 11 6 9 7 2
A1 A2 A3 A4 A5 A6 — B1 B2 B3 B4 B5 B6

ER

FRONTALE-1 — FRONTALE-2 — TA — APPARECCH. "A" — APPARECCH. "B" — ER

CIRCUITO STAMPATO
PRINTED CIRCUIT BOARD
COD. 6100541

MV — PG — PA (NC C NA) — EV — STA — VPS504 — RWF40 — LINEA — TAB

TERRA
GROUND

TP2
TP3

RC
(×××)

ASCON KM3 HCRMMD
14 12 7 8 10 9 11-13 — 4 — 1 2 3

600V RRR0-1-T73 (§)
20 6 21 22 23 24 19-5 — 4 — 3 2 1

SIEMENS RWF50.2x
K2 K3 1N 1P L1 N KQ — G- G+ 13 12 11

SIEMENS RWF40.0x0
Y1 Y2 Q13Q14 L1 N Q TE — U1 G- G+ M1 I1 G1+

SIEMENS RWF55.5x
K2 K3 1N 1P L1 N KQ TE — 13 G- G+ 14 12 11

MV — PG — PA — EV — STA — VPS504 — RWF40 — LINEA — TAB

A — B

PG — PA — EV1,2

STA13B0.36/83N30L
3 2 7 8 1 6 9

SIEMENS SQN72.4A4A20
3 8 4 5 2 N 1

VPS50x
(OPTIONAL)
N L1 T6

CONN-LINEA — B4 S3 T2 T1 N PE L1

FU4 2A-F — C1 — LBF1 — LB1 — ST — TS — FU3 MIN.6,3A-T/MAX.10A-T — IL — 230V

SMA — (2) — (3) MAN — (1) AUTO
SMF — (5) — (6) MIN — (4) MAX

L1 MARRONE *BROWN*
N BLU *BLUE*
B5 ROSSO *RED*
T6 NERO *BLACK*
T7 BIANCO *WHITE*
T8 ARANCIO *ORANGE*

CAVO 7x0,75mmq
7x0,75mmq CABLE
CONN. SONDE

(××)
COLLEGAMENTO SONDE
PROBE CONNECTION

A
KM1.1 — MV — CONN-MOTORE V. — M 1~ — MOTORE VENTILATORE / FAN MOTOR — N — L1 — PE — FU1 — IM — 230V
FU1 = MOT. 370W / 450W MIN. 6,3A-T/MAX.10A-T
FU1 = MOT. 620W MIN. 10A-T/MAX.15A-T

B
MV — M 1~ — MOTORE VENTILATORE / FAN MOTOR

SERVOCOMANDO SERRANDA ARIA
AIR DAMPER ACTUATOR
STA13B0.36/83N30L

I	ALTA FIAMMA / *HIGH FLAME*
II	SOSTA / *STAND-BY*
IV	BASSA FIAMMA / *LOW FLAME*
III	NON USATA / *NOT USED*

SERVOCOMANDO SERRANDA ARIA
AIR DAMPER ACTUATOR
SIEMENS SQN72.xA4A20

I (ROSSO) / *I (RED)*	ALTA FIAMMA / *HIGH FLAME*
II (BLU) / *II (BLUE)*	SOSTA / *STAND-BY*
III (ARANCIO) / *III (ORANGE)*	BASSA FIAMMA / *LOW FLAME*
IV (NERO) / *IV (BLACK)*	NON USATA / *NOT USED*

(#) MOTORE VENTIL. VERSIONE [A], FU2 = 6,3A F; MOTORE VENTIL. VERSIONE [B], FU2 = 10A F
FAN MOTOR VERSION [A], FU2= 6,3 A F;
FAN MOTOR VERSION [B], FU2= 10 A F

(×××) SOLO CON ALIMENTAZIONE ELETTRICA SENZA NEUTRO
WITH ELECTRIC SUPPLY WITHOUT NEUTRAL VERSION ONLY

Data 19/10/2010		PREC. 2	FOGLIO 3
Revisione 06			
Dis. N. 18 – 0163		SEGUE 4	TOTALE 5

(××)
ATTENZIONE COLLEGAMENTO SONDE CON CONNETTORE 7 POLI
WARNING PROBE CONNECTION WITH 7 PINS CONNECTOR

KM3 HCRMMD

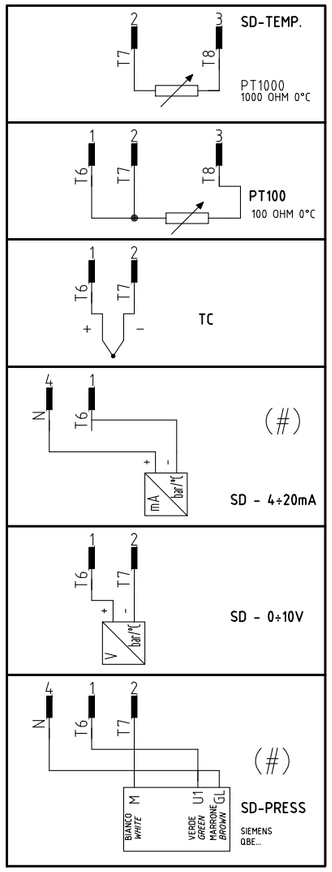

600V RRR0-1-T73

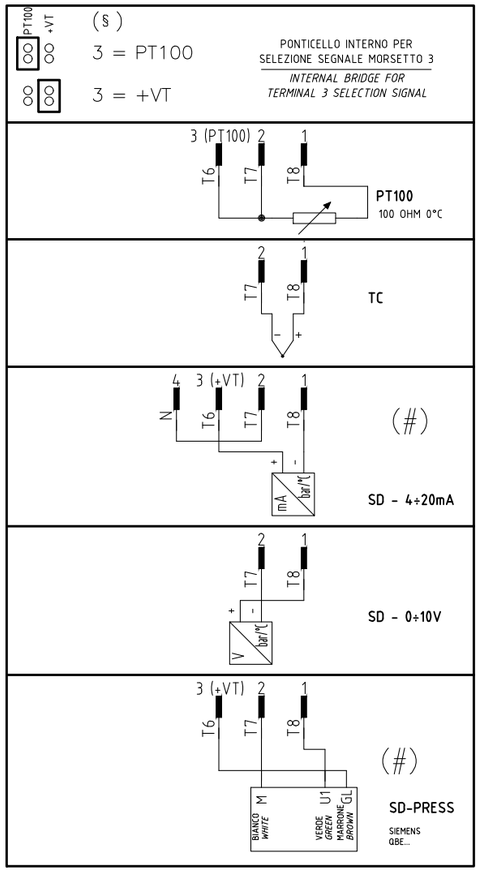

RWF55.5x

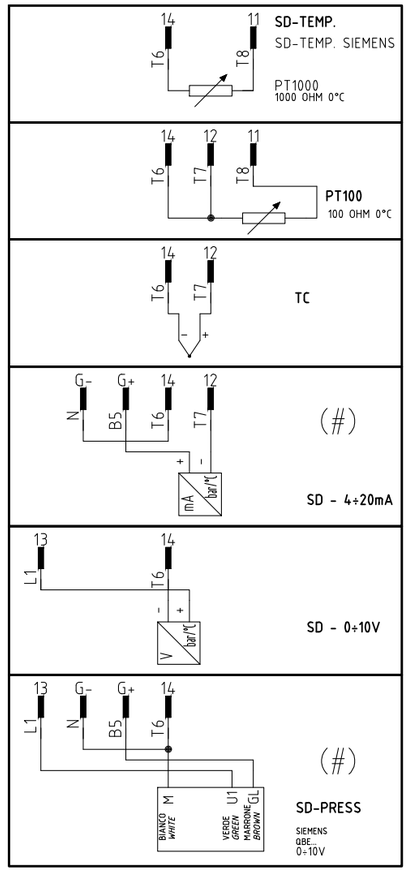

RWF50.2x

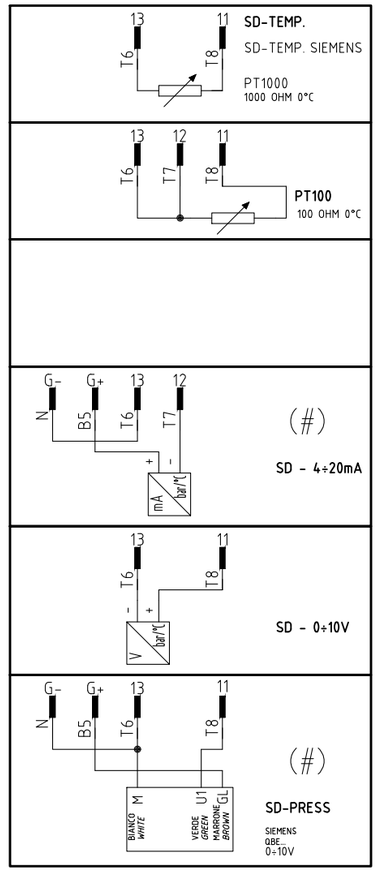

RWF40.0xx

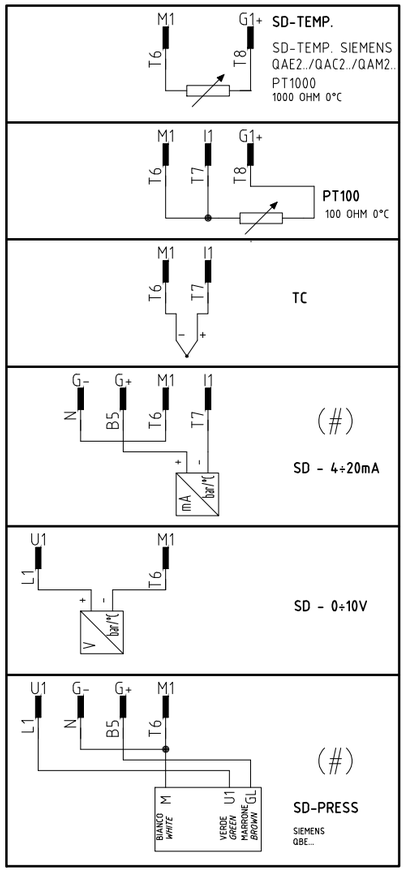

(#)
COLLEGAMENTO SOLO PER
TRASDUTTORI PASSIVI
TRASDUCER PASSIVE
CONNECTION ONLY

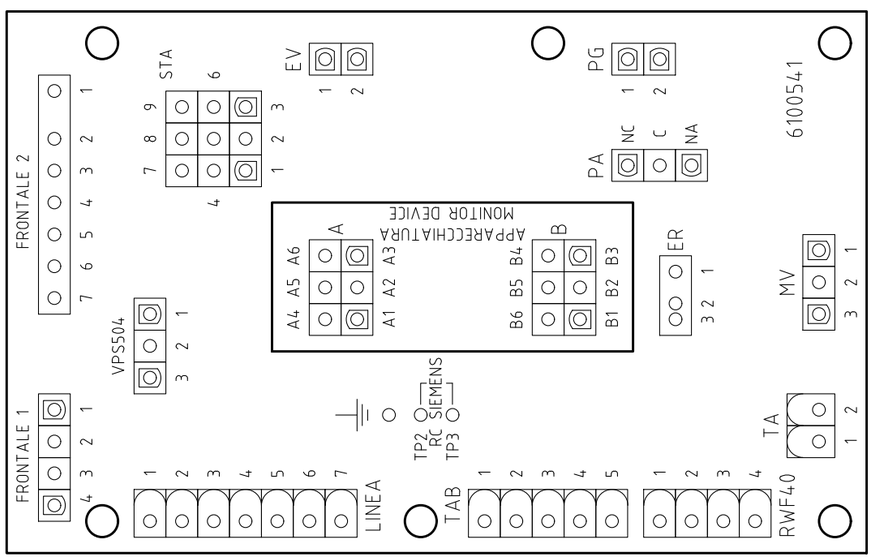

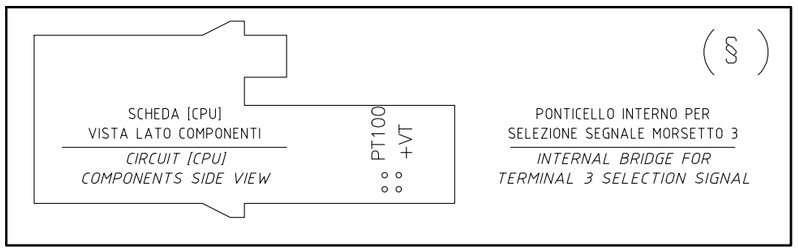

Data 19/10/2010		PREC. 3	FOGLIO 4
Revisione 06			
Dis. N. 18 – 0163		SEGUE 5	TOTALE 5

Sigla/Item	Funzione	Function
600V RRR0-1-T73	REGOLATORE MODULANTE (ALTERNATIVO)	BURNER MODULATOR (ALTERNATIVE)
C1	CONTAORE BASSA FIAMMA	LOW FLAME TIME COUNTER
C2	CONTAORE ALTA FIAMMA	HIGH FLAME TIME COUNTER
ER	ELETTRODO RILEVAZIONE FIAMMA	FLAME DETECTION ELECTRODE
EV1,2	ELETTROVALVOLE GAS (O GRUPPO VALVOLE)	GAS ELECTRO-VALVES (OR VALVES GROUP)
FU1	FUSIBILE LINEA MOTORE VENTILATORE	FAN MOTOR LINE FUSE
FU2	FUSIBILE DI LINEA	LINE FUSE
FU3	FUSIBILE LINEA BRUCIATORE	BURNER LINE FUSE
FU4	FUSIBILE AUSILIARIO	AUXILIARY FUSE
IL	INTERRUTTORE LINEA AUSILIARI	AUXILIARY LINE SWITCH
IM	INTERRUTTORE LINEA MOTORE VENTILATORE	FAN MOTOR LINE SWITCH
KM1.1	CONTATTORE MOTORE VENTILATORE	FAN MOTOR CONTACTOR
KM3 HCRMMD	REGOLATORE MODULANTE (ALTERNATIVO)	BURNER MODULATOR (ALTERNATIVE)
LAF	LAMPADA SEGNALAZIONE ALTA FIAMMA BRUCIATORE	BURNER IN HIGH FLAME INDICATOR LIGHT
LAF1	LAMPADA SEGNALAZIONE ALTA FIAMMA BRUCIATORE	BURNER IN HIGH FLAME INDICATOR LIGHT
LB	LAMPADA SEGNALAZIONE BLOCCO BRUCIATORE	INDICATOR LIGHT FOR BURNER LOCK-OUT
LB1	LAMPADA SEGNALAZIONE BLOCCO BRUCIATORE	INDICATOR LIGHT FOR BURNER LOCK-OUT
LBF	LAMPADA SEGNALAZIONE BASSA FIAMMA BRUCIATORE	BURNER IN LOW FLAME INDICATOR LIGHT
LBF1	LAMPADA SEGNALAZIONE BASSA FIAMMA BRUCIATORE	BURNER IN LOW FLAME INDICATOR LIGHT
LEV1	LAMPADA SEGNALAZIONE APERTURA [EV1]	INDICATOR LIGHT FOR OPENING OF ELECTRO-VALVE [EV1]
LEV2	LAMPADA SEGNALAZIONE APERTURA [EV2]	INDICATOR LIGHT FOR OPENING OF ELECTRO-VALVE [EV2]
LF	LAMPADA SEGNALAZIONE FUNZIONAMENTO BRUCIATORE	INDICATOR LIGHT BURNER OPERATION
LPG	LAMPADA SEGNALAZIONE PRESENZA GAS IN RETE	INDICATOR LIGHT FOR PRESENCE OF GAS IN THE NETWORK
LTA	LAMPADA SEGNALAZIONE TRASFORMATORE DI ACCENSIONE	IGNITION TRANSFORMER INDICATOR LIGHT
MV	MOTORE VENTILATORE	FAN MOTOR
PA	PRESSOSTATO ARIA	AIR PRESSURE SWITCH
PG	PRESSOSTATO GAS DI MINIMA PRESSIONE	MINIMUM GAS PRESSURE SWITCH
PS	PULSANTE SBLOCCO FIAMMA	FLAME UNLOCK BUTTON
PT100	SONDA DI TEMPERATURA	TEMPERATURE PROBE
RC	CIRCUITO RC	RC CIRCUIT
SD-PRESS	SONDA DI PRESSIONE	PRESSURE PROBE
SD-TEMP.	SONDA DI TEMPERATURA	TEMPERATURE PROBE
SD - 0÷10V	TRASDUTTORE USCITA IN TENSIONE	TRANSDUCER VOLTAGE OUTPUT
SD - 4÷20mA	TRASDUTTORE USCITA IN CORRENTE	TRANSDUCER CURRENT OUTPUT
SIEMENS LGB2x.330/LME2x.33x	APPARECCHIATURA CONTROLLO FIAMMA	CONTROL BOX
SIEMENS LME22.331	APPARECCHIATURA CONTROLLO FIAMMA	CONTROL BOX
SIEMENS LME22.331	APPARECCHIATURA CONTROLLO FIAMMA	CONTROL BOX
SIEMENS RWF40.0x0	REGOLATORE MODULANTE	BURNER MODULATOR
SIEMENS RWF50.2x	REGOLATORE MODULANTE	BURNER MODULATOR
SIEMENS RWF55.5x	REGOLATORE MODULANTE (ALTERNATIVO)	BURNER MODULATOR (ALTERNATIVE)
SIEMENS SQN72.4A4A20	SERVOCOMANDO SERRANDA ARIA (ALTERNATIVO)	AIR DAMPER ACTUATOR (ALTERNATIVE)
SMA	SELETTORE MANUALE/AUTOMATICO	MANUAL/AUTOMATIC SWITCH
SMF	SELETTORE MANUALE FUNZIONAMENTO MIN-0-MAX	MIN-0-MAX MANUAL OPERATION SWITCH
ST	SERIE TERMOSTATI/PRESSOSTATI	SERIES OF THERMOSTATS OR PRESSURE SWITCHES
STA13B0.36/83N30L	SERVOCOMANDO SERRANDA ARIA	AIR DAMPER ACTUATOR
TA	TRASFORMATORE DI ACCENSIONE	IGNITION TRANSFORMER
TAB	TERMOSTATO/PRESSOSTATO ALTA-BASSA FIAMMA	HIGH-LOW THERMOSTAT/PRESSURE SWITCHES
TC	TERMOCOPPIA	THERMOCOUPLE
TS	TERMOSTATO/PRESSOSTATO DI SICUREZZA	SAFETY THERMOSTAT OR PRESSURE SWITCH
VPS50x	CONTROLLO DI TENUTA VALVOLE GAS (OPTIONAL)	GAS PROVING SYSTEM (OPTIONAL)

Data 19/10/2010		PREC. 4	FOGLIO 5
Revisione 06			
Dis. N. 18 – 0163		SEGUE /	TOTALE 5

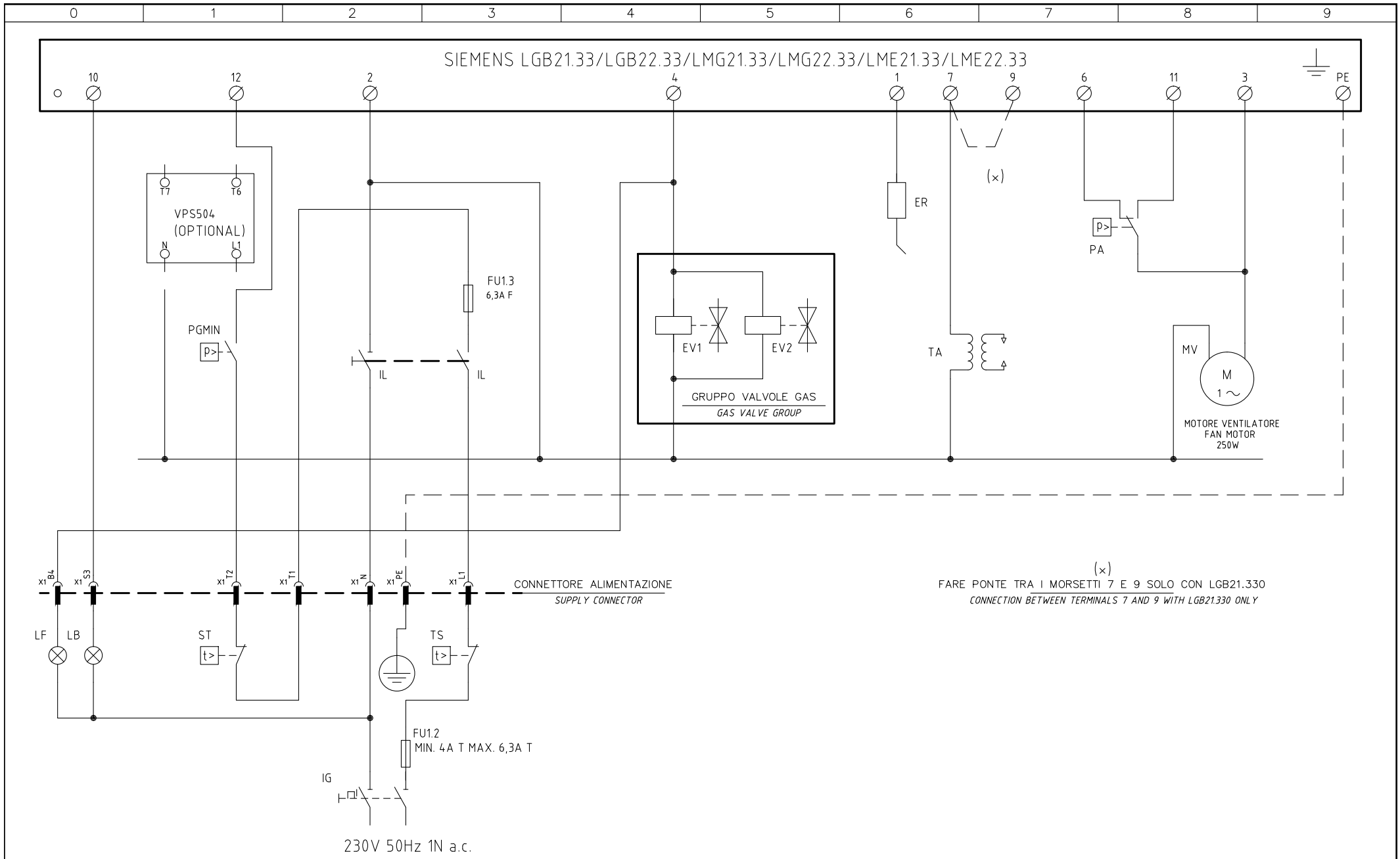

Data 21/07/2006		PREC.	FOGLIO
Revisione 00		/	1
Dis. N. 01 – 530		SEGUE	TOTALE
		2	2

0	1	2	3	4	5	6	7	8	9

SIGLA/ITEM	FOGLIO/SHEET	FUNZIONE	FUNCTION
ER	1	ELETTRODO RIVELAZIONE FIAMMA	FLAME DETECTION ELECTRODE
EV1	1	ELETTROVALVOLA GAS LATO RETE (O GRUPPO VALVOLE)	GAS ELECTRO-VALVE UPSTREAM (OR VALVES GROUP)
EV2	1	ELETTROVALVOLA GAS LATO BRUCIATORE (O GRUPPO VALVOLE)	GAS ELECTRO-VALVE DOWNSTREAM (OR VALVES GROUP)
FU1.2	1	FUSIBILE DI LINEA	LINE FUSE
FU1.3	1	FUSIBILE AUSILIARIO	AUXILIARY FUSE
IG	1	INTERRUTTORE GENERALE	MAIN DISCONNECTOR
IL	1	INTERRUTTORE LINEA BRUCIATORE	BURNER LINE SWITCH
LB	1	LAMPADA SEGNALAZIONE BLOCCO BRUCIATORE	INDICATOR LIGHT FOR BURNER LOCK-OUT
LF	1	LAMPADA SEGNALAZIONE FUNZIONAMENTO BRUCIATORE	INDICATOR LIGHT BURNER OPERATION
MV	1	MOTORE VENTILATORE	FAN MOTOR
PA	1	PRESSOSTATO ARIA COMBURENTE	COMBUSTION AIR PRESSURE SWITCH
PGMIN	1	PRESSOSTATO GAS DI MINIMA PRESSIONE	MINIMUM GAS PRESSURE SWITCH
SIEMENS LGB../LMG../LME..	1	APPARECCHIATURA CONTROLLO FIAMMA	FLAME MONITOR DEVICE
ST	1	SERIE TERMOSTATI/PRESSOSTATI	SERIES OF THERMOSTATS OR PRESSURE SWITCHES
TA	1	TRASFORMATORE DI ACCENSIONE	IGNITION TRANSFORMER
TS	1	TERMOSTATO/PRESSOSTATO DI SICUREZZA	SAFETY THERMOSTAT OR PRESSURE SWITCH
VPS504	1	CONTROLLO DI TENUTA VALVOLE GAS (OPTIONAL)	GAS LEAKAGE MONITOR DEVICE (OPTIONAL)

Data 21/07/2006		PREC.	FOGLIO
Revisione 00		1	2
Dis. N. 01 – 530		SEGUE	TOTALE
		/	2

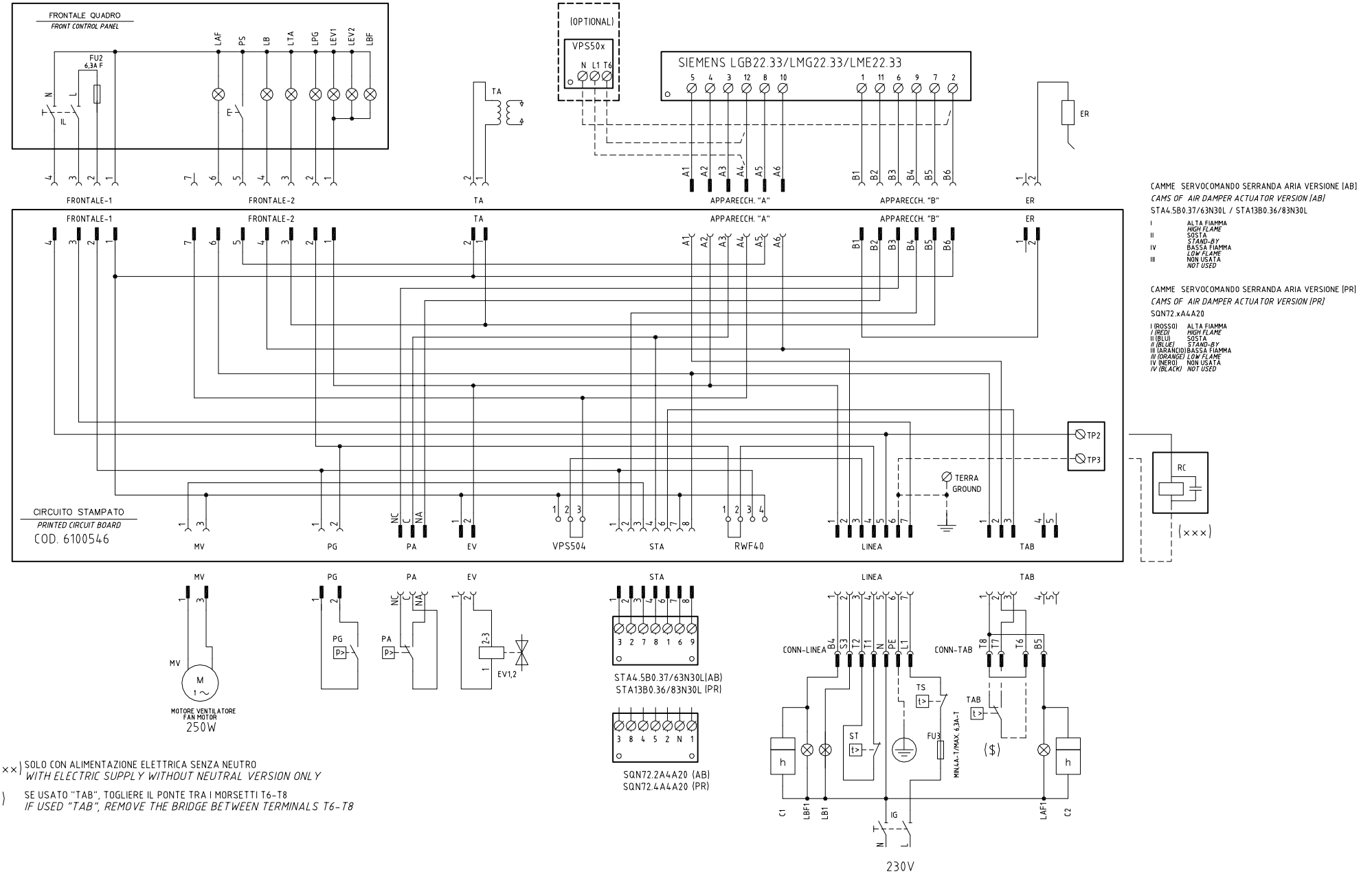

(×××) SOLO CON ALIMENTAZIONE ELETTRICA SENZA NEUTRO
WITH ELECTRIC SUPPLY WITHOUT NEUTRAL VERSION ONLY

($) SE USATO "TAB", TOGLIERE IL PONTE TRA I MORSETTI T6-T8
IF USED "TAB", REMOVE THE BRIDGE BETWEEN TERMINALS T6-T8

Data 21/07/2006		PREC.	FOGLIO
Revisione 01		/	1
Dis. N. 18 – 103	SEGUE 2		TOTALE 2

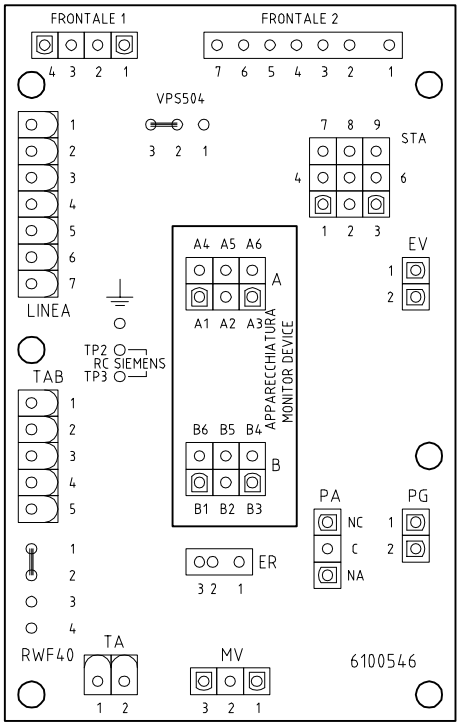

SIGLA/ITEM	FUNZIONE	FUNCTION
C1	CONTAORE BASSA FIAMMA	LOW FLAME TIME COUNTER
C2	CONTAORE ALTA FIAMMA	HIGH FLAME TIME COUNTER
ER	ELETTRODO RILEVAZIONE FIAMMA	FLAME DETECTION ELECTRODE
EV1,2	ELETTROVALVOLE GAS (O GRUPPO VALVOLE)	GAS ELECTRO-VALVES (OR VALVES GROUP)
FU2	FUSIBILE DI LINEA	LINE FUSE
FU3	FUSIBILE LINEA BRUCIATORE	BURNER LINE FUSE
IG	INTERRUTTORE LINEA BRUCIATORE	BURNER LINE SWITCH
IL	INTERRUTTORE LINEA AUSILIARI	AUXILIARY LINE SWITCH
LAF	LAMPADA SEGNALAZIONE ALTA FIAMMA BRUCIATORE	BURNER IN HIGH FLAME INDICATOR LIGHT
LAF1	LAMPADA SEGNALAZIONE ALTA FIAMMA BRUCIATORE	BURNER IN HIGH FLAME INDICATOR LIGHT
LB	LAMPADA SEGNALAZIONE BLOCCO BRUCIATORE	INDICATOR LIGHT FOR BURNER LOCK-OUT
LB1	LAMPADA SEGNALAZIONE BLOCCO BRUCIATORE	INDICATOR LIGHT FOR BURNER LOCK-OUT
LBF	LAMPADA SEGNALAZIONE BASSA FIAMMA BRUCIATORE	BURNER IN LOW FLAME INDICATOR LIGHT
LBF1	LAMPADA SEGNALAZIONE BASSA FIAMMA BRUCIATORE	BURNER IN LOW FLAME INDICATOR LIGHT
LEV1	LAMPADA SEGNALAZIONE APERTURA [EV1]	INDICATOR LIGHT FOR OPENING OF ELECTRO-VALVE [EV1]
LEV2	LAMPADA SEGNALAZIONE APERTURA [EV2]	INDICATOR LIGHT FOR OPENING OF ELECTRO-VALVE [EV2]
LPG	LAMPADA SEGNALAZIONE PRESENZA GAS IN RETE	INDICATOR LIGHT FOR PRESENCE OF GAS IN THE NETWORK
LTA	LAMPADA SEGNALAZIONE TRASFORMATORE DI ACCENSIONE	IGNITION TRANSFORMER INDICATOR LIGHT
MV	MOTORE VENTILATORE	FAN MOTOR
PA	PRESSOSTATO ARIA	AIR PRESSURE SWITCH
PG	PRESSOSTATO GAS DI MINIMA PRESSIONE	MINIMUM GAS PRESSURE SWITCH
PS	PULSANTE SBLOCCO FIAMMA	LOCK-OUT RESET BUTTON
RC	CIRCUITO RC	RC CIRCUIT
SIEMENS LGB22.33/LMG22.33/LME22.33	APPARECCHIATURA CONTROLLO FIAMMA	CONTROL BOX
SQN72.2A4A20	SERVOCOMANDO SERRANDA ARIA VERSIONE [AB]	AIR DAMPER ACTUATOR VERSION [AB]
SQN72.4A4A20	SERVOCOMANDO SERRANDA ARIA VERSIONE [PR]	AIR DAMPER ACTUATOR VERSION [PR]
ST	SERIE TERMOSTATI/PRESSOSTATI	SERIES OF THERMOSTATS OR PRESSURE SWITCHES
STA4.5B0.37/63N30L	SERVOCOMANDO SERRANDA ARIA VERSIONE [AB]	AIR DAMPER ACTUATOR VERSION [AB]
STA13B0.36/83N30L	SERVOCOMANDO SERRANDA ARIA VERSIONE [PR]	AIR DAMPER ACTUATOR VERSION [PR]
TA	TRASFORMATORE DI ACCENSIONE	IGNITION TRANSFORMER
TAB	TERMOSTATO/PRESSOSTATO ALTA-BASSA FIAMMA	HIGH-LOW THERMOSTAT/PRESSURE SWITCHES
TS	TERMOSTATO/PRESSOSTATO DI SICUREZZA	SAFETY THERMOSTAT OR PRESSURE SWITCH
VPS50x	CONTROLLO DI TENUTA VALVOLE GAS (OPTIONAL)	GAS PROVING SYSTEM (OPTIONAL)

Data 21/07/2006		PREC. 1	FOGLIO 2
Revisione 01			
Dis. N. 18 – 103		SEGUE /	TOTALE 2

BURNER EXPLODED VIEW NG280

Position	Description
1	VALVE GROUP
3	COVER FIXING SCREW
7	FIXING BRACKET - LEFT SIDE
8	FIXING BRACKET - RIGHT SIDE
10	COVER
11	4-WAYS FAIRLEAD
12	2-WAYS FAIRLEAD
13	FAIRLEAD
14	FASTENER
15.1	GAS PRESSURE INTAKE
15.2	HOUSING
15.3	FLANGED COUPLING
15.4	MOTOR'S PLATE
15.5	WASHER
16	GASKET
17	AIR DAMPER INDEX
18	EXTENSION SCREW
19	FAN
20	GAS PRESSURE SWITCH
21	MOTOR
22	VALVE GROUP FLANGE
23	GAS PROVING SYSTEM
25	AIR FLAP
26	AIR DAMPER CRANK (progressive and fully modulating only)
27	FIXING ROD
30	PANEL ASSEMBLY
34	GREY/GREEN TERMINAL
35	BLACK/GREEN TERMINAL
36	BLOCKING PLATE
37.1	COMPONENTS BRACKET
37.2	ELECTRONIC BOARD
37.3	ACTUATOR (double stage, progressive and fully modulating only)
37.4	AIR PRESSURE SWITCH
37.5	CONTROL BOX BOARD
37.6	CONTROL BOX
37.7	GAS TRANSFORMER
38	BOX ASSEMBLY
41	BLAST TUBE
42.1	BUTTERFLY MANIFOLD
42.12	INGNITION CABLE
42.13	DETECTION CABLE
42.17.1	INGNITION ELECTRODE
42.17.2	DETECTION ELECTRODE
42.17.3	GROUNDED CABLE
42.17.5	COMBUSTION HEAD
43	GAS PIPE
44	OR RING

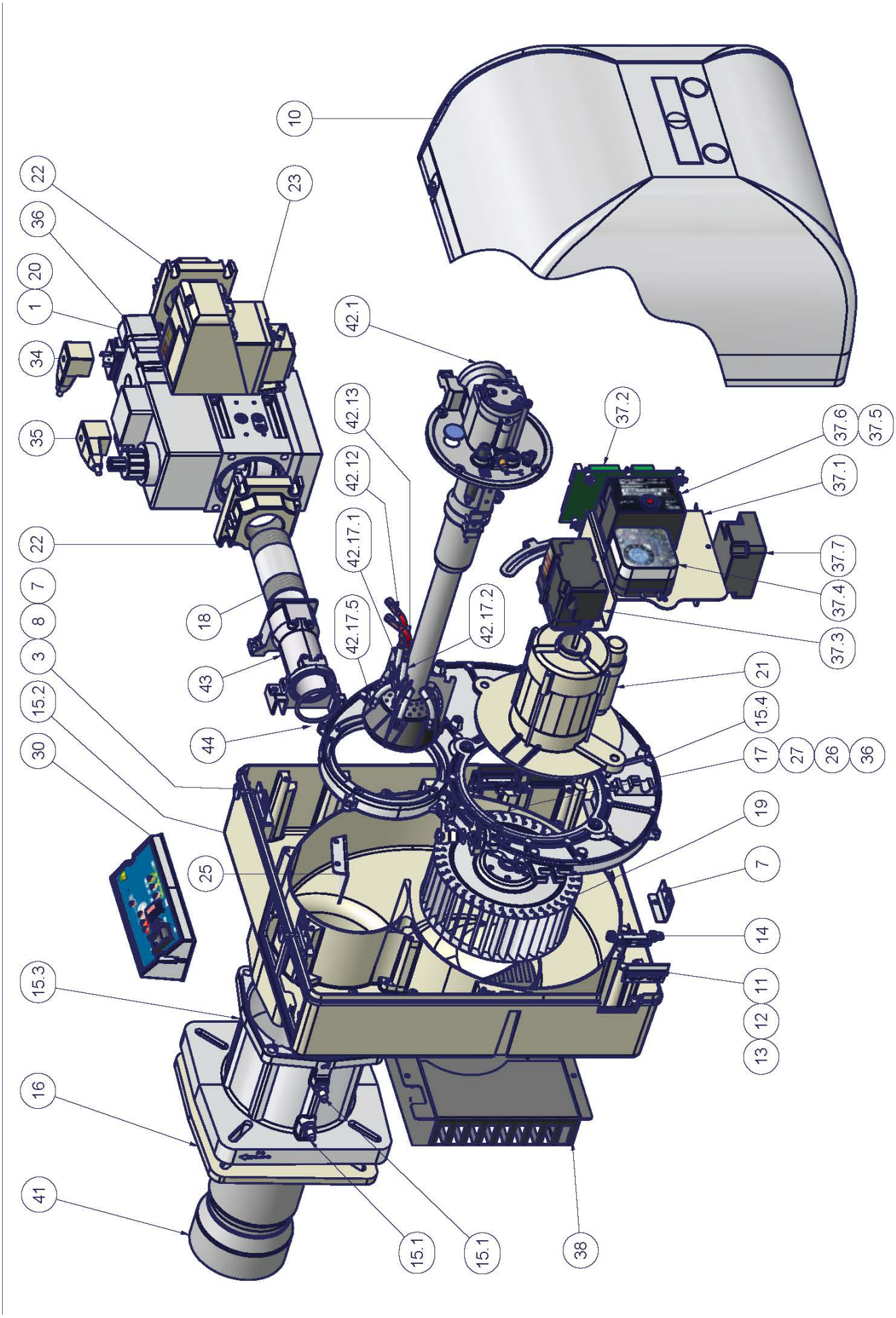
10
22
36
20
1
34
35
23
42.1
42.13
42.12
42.17.1
42.17.5
42.17.2
37.2
37.6
37.5
37.1
37.7
37.4
37.3
22
7
8
3
15.2
30
18
43
44
21
15.4
17
27
26
36
19
7
14
11
12
13
25
15.3
16
41
15.1
15.1
38

BURNER EXPLODED VIEW NG350-400

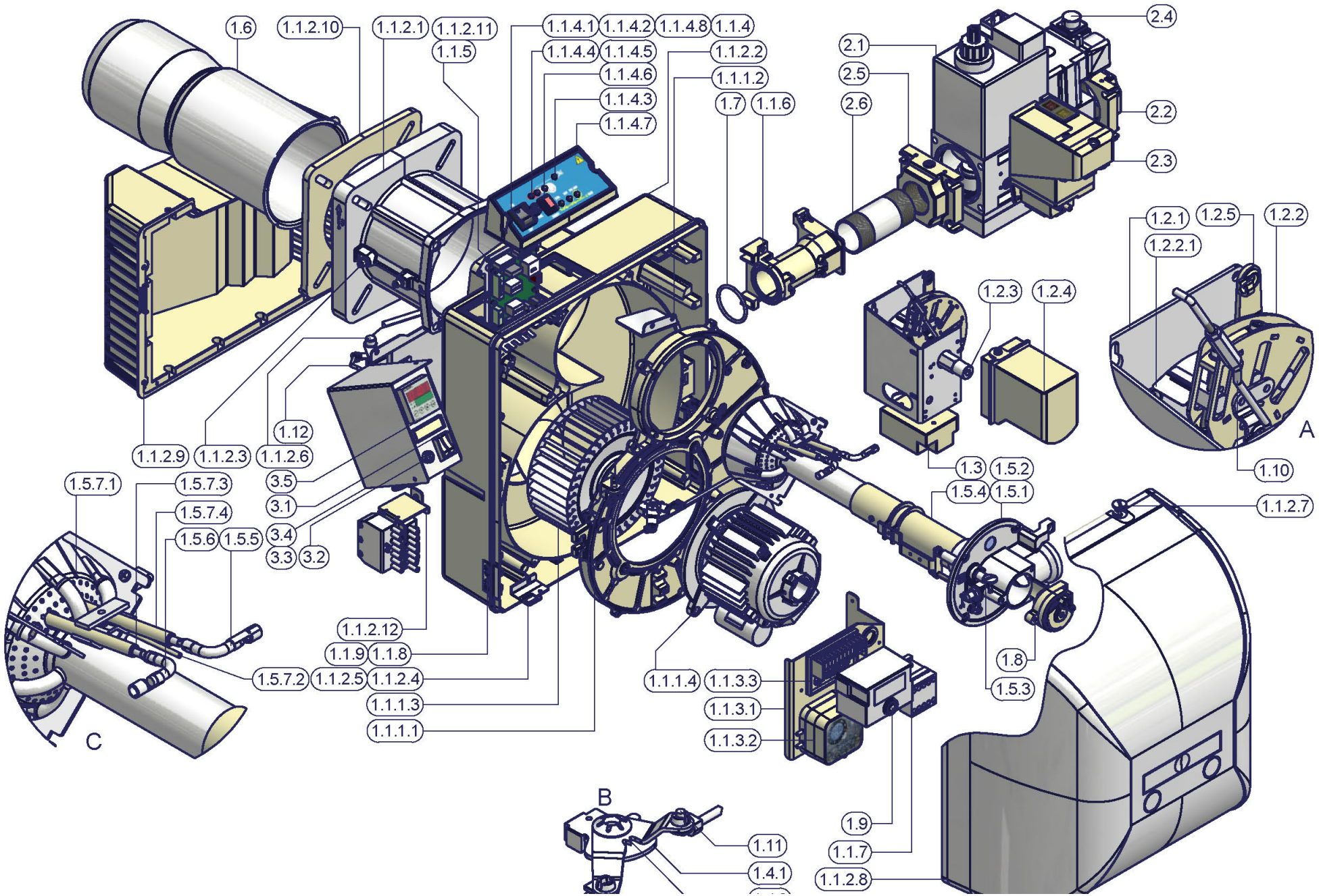

BURNER EXPLODED VIEW NG350-400

Position	Description
1	VALVE GROUP
2	WASHER
3	COVER FIXING SCREW
4	AIR DAMPER ASSEMBLY
5	BOX ASSEMBLY
6	BOARD'S SUPPORTING BRACKET
7	FIXING BRACKET - LEFT SIDE
8	FIXING BRACKET - RIGHT SIDE
9	BLAST TUBE
10	COVER
11	4-WAYS FAIRLEAD
12	2-WAYS FAIRLEAD
13	FAIRLEAD
14	FASTENER
15.1	GAS PRESSURE INTAKE
15.2	HOUSING
15.3	FLANGED COUPLING
15.4	MOTOR'S PLATE
15.5	WASHER
16	GASKET
17	AIR DAMPER INDEX
18	EXTENSION SCREW
19	FAN
20	GAS PRESSURE SWITCH
21	MOTOR
22	VALVE GROUP FLANGE
23	GAS PROVING SYSTEM
24	OR RING
25	AIR FLAP
26	AIR DAMPER CRANK (progressive and fully modulating only)
27	FIXING ROD
28	GAS PIPE
29.1	GAS TRANSFORMER
29.2	SMALL ADJUSTING CAM
29.3	ACTUATOR (double stage, progressive and fully modulating only)
30	PANEL ASSEMBLY
31.1	CONTROL BOX BRACKET
31.2	AIR PRESSURE SWITCH
31.3.1	CONTROL BOX
31.3.2	CONTROL BOX BOARD
31.4	CONTACTOR
32.1	BUTTERFLY MANIFOLD
32.2	HEAD EXTENSION ASSEMBLY
32.3	BUTTERFLY ASSEMBLY
32.4.1	COMBUSTION HEAD
32.4.2	DETECTION ELECTRODE
32.4.3	INGNITION ELECTRODE
32.5	INGNITION CABLE
32.6	DETECTION CABLE
33	ELECTRONIC BOARD
34	GREY/GREEN TERMINAL
35	BLACK/GREEN TERMINAL
36	BLOCKING PLATE

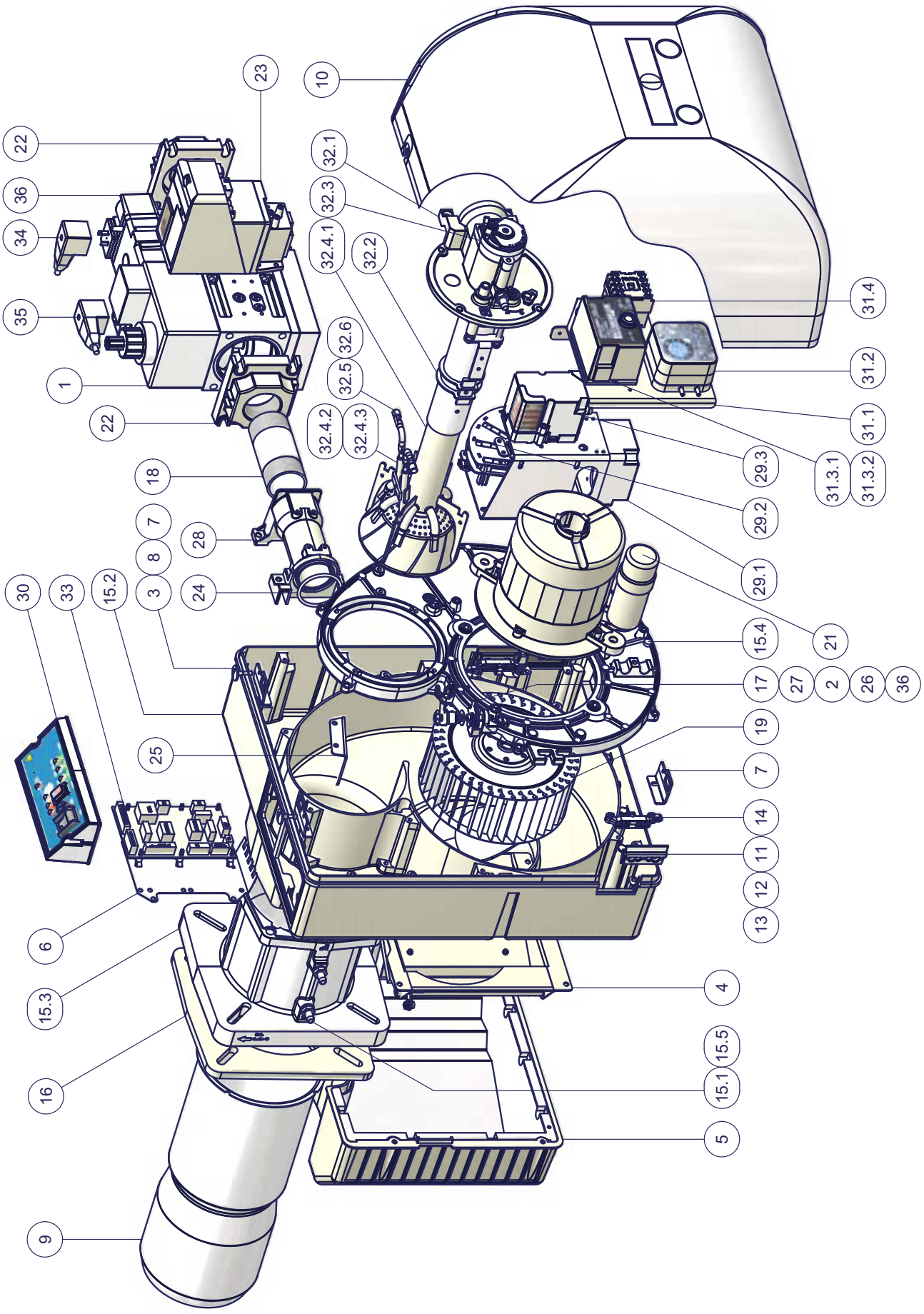
23
10
22
32.1
36
32.3
34
32.4.1
32.2
31.4
35
32.6
32.5
31.2
1
32.4.2
32.4.3
31.1
22
29.3
31.3.1
31.3.2
18
29.2
7
28
8
29.1
3
24
30
33
15.2
15.4
21
17
27
2
26
36
19
25
7
14
11
12
13
6
4
15.3
15.5
16
15.1
5
9

APPENDIX

SIEMENS LME11/21/22 CONTROL BOX

The series of equipment LME.. is used for the starup and supervisione of 1- or 2- stage gas burners. The series LME.. is interchangeable with the series LGB.. and LMG.., all diagrams and accessories are interchangeable.

Comparative table

LGB Series	LMG Series	LME Series
---	LMG 25.33	LME 11.33
LGB 21.33	LMG 21.33	LME 21.33
LGB 22.33	LMG 22.33	LME 22.33

Preconditions for burner startup

- Burner control must be reset
- All contacts in the line are closed, request for heat
- No undervoltage
- Air pressure switch LP must be in its “no-load” position
- Fan motor or AGK25 is closed
- Flame detector is darkened and there is no extraneous light

Undervoltage

Safety shutdown from the operating position takes place should mains voltage drop below about AC 175 V (at UN = AC 230 V)

Restart is initiated when mains voltage exceeds about AC 185 V (at UN = AC 230 V).

Controlled intermittent operation

After no more than 24 hours of continuous operation, the burner control will initiate automatic controlled shutdown followed by a restart.

Reversed polarity protection with ionization

If the connections of live conductor (terminal 12) and neutral conductor (terminal 2) aremixed up, the burner control will initiate lockout at the end of the safety time “TSA”.

Control sequence in the event of fault

If lockout occurs, the outputs for the fuel valves, the burner motor and the ignition equipment will immediately be deactivated (< 1 second).

Operational status indication

In normal operation, the different operating states are showed by means of the multicolor LED, inside the lockout reset button:

red LED **yellow LED** **green LED** LED	..... Steady on ❍... Off

During startup, status indication takes place according to the table:

Status	Color code	Color
Waiting time tw, other waiting states	❍.....	Off
Ignition phase, ignition controlled	● ❍ ● ❍ ● ❍ ● ❍ ● ❍ ●	Flashing yellow
Operation, flame ok	□.....	Green
Operation, flame not ok	□ ❍ □ ❍ □ ❍ □ ❍ □ ❍	Flashing green
Extraneous light on burner startup	□ ▲ □ ▲ □ ▲ □ ▲ □ ▲	Green - red
Undervoltage	● ▲ ● ▲ ● ▲ ● ▲ ● ▲	Yellow - red
Fault, alarm	▲.....	Red
Error code output (refer to “Error code table”)	▲❍ ▲❍ ▲❍ ▲❍	Flashing red

START-UP PROGRAM

As far as the startup program, see its time diagram:

A Start command (switching on)

This command is triggered by control thermostat / pressure controller «R». Terminal 12 receives voltage and the programming mechanism starts running. On completion of waiting time «tw» with the LME21..., or after air damper «SA» has reached the nominal load position (on completion of «t11») with the LME22..., fan motor «M» will be started.

tw Waiting time

During the waiting time, air pressure monitor «LP» and flame relay «FR» are tested for correct contact positions.

t11 Programmed opening time for actuator «SA»

(Only with LME22...) The air damper opens until the nominal load position is reached. Only then will fan motor «M» be switched on.

t10 Specified time for air pressure signal

On completion of this period of time, the set air pressure must have built up, or else lockout will occur.

t1 Prepurge time

Purging the combustion chamber and the secondary heating surfaces: required with low-fire air volumes when using the LME21... and with nominal load air volumes when using the LME22.... The diagrams show the so-called prepurge time «t1» during which air pressure monitor «LP» must indicate that the required air pressure is available. The effective prepurge time «t1» comprises interval end «tw» through «t3».

t12 Programmed closing time for actuator «SA»

(Only with LME22...)During «t12», the air damper travels to the low-fire position.

t3 Preignition time

During «t3» and up to the end of «TSA», flame relay «FR» is forced to close. On completion of «t3», the release of fuel is triggered at terminal 4.

TSA Ignition safety time

On completion of «TSA», a flame signal must be present at terminal 1. That flame signal must be continuously available until shutdown occurs, or else flame relay «FR» will be deenergized, resulting in lockout.

t4 Interval BV1 and BV2-LR

Time between the end of TSA and the signal to the second fuel valve BV2 or to the load controller LR

B - B' Interval for flame establishment

C Burner operation position

C - D Burner operation (heat production)

D Controlled by "R" shutdown

The burner stops and the control device is ready for a new startup.

LME11 control sequence

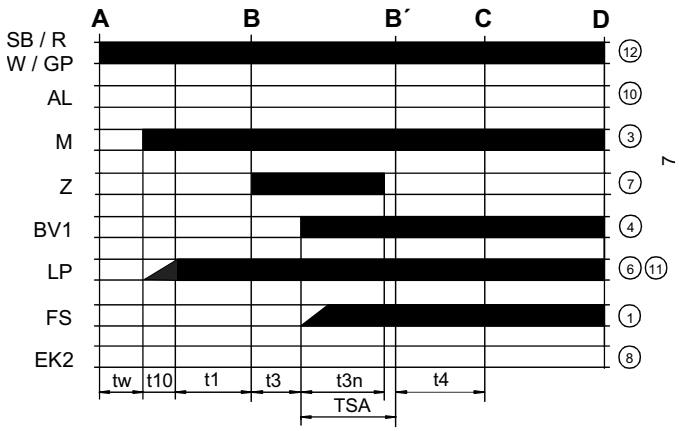

LME21 control sequence

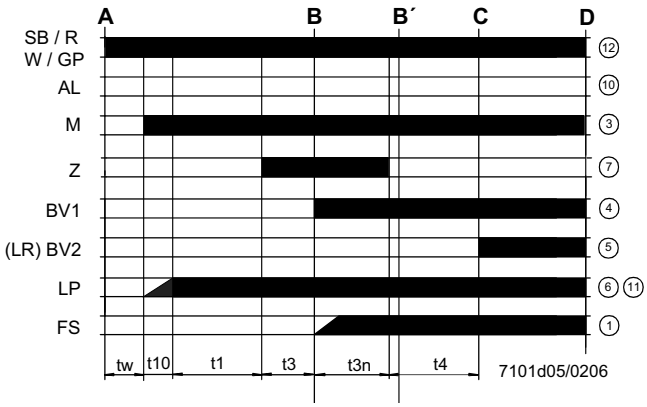

LME22 control sequence

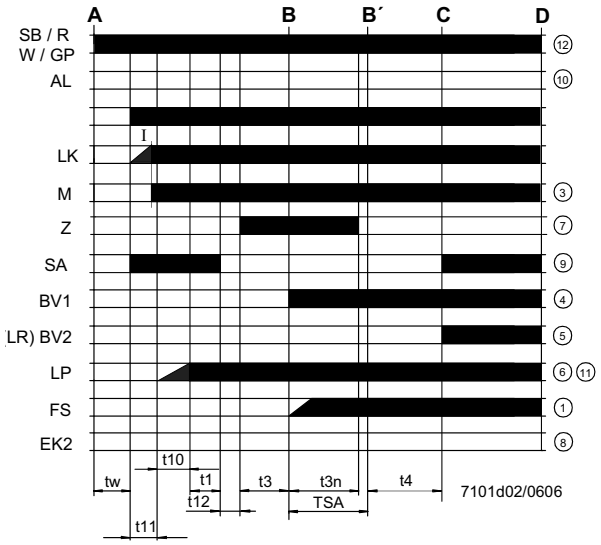

Control sequence

tw	Waiting time
t1	Purge time
TSA	Ignition safety time
t3	Preignition time
t3n	Postignition time
t4	Interval between BV1 and BV2/LR
t10	Specified time for air pressure signal
t11	Programmed opening time for actuator SA
t12	Programmed closing time for actuator SA

LME11 connection diagram

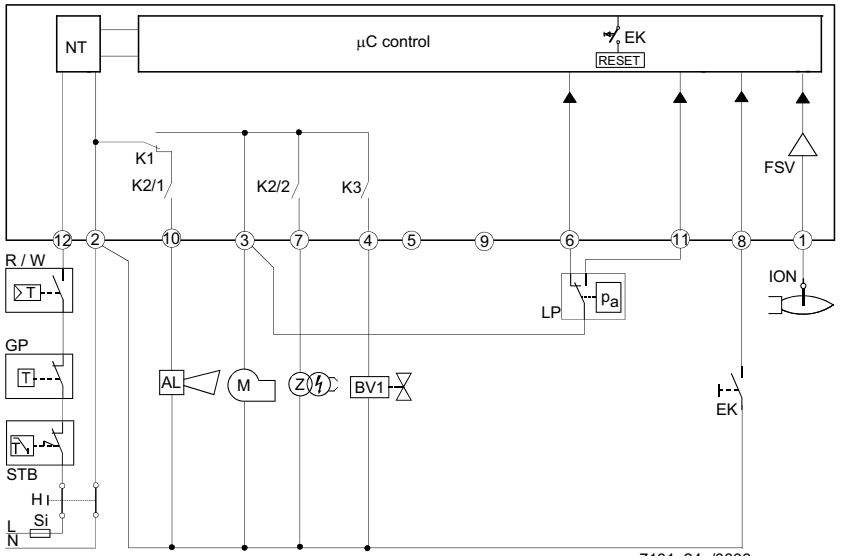

LME21 connection diagram

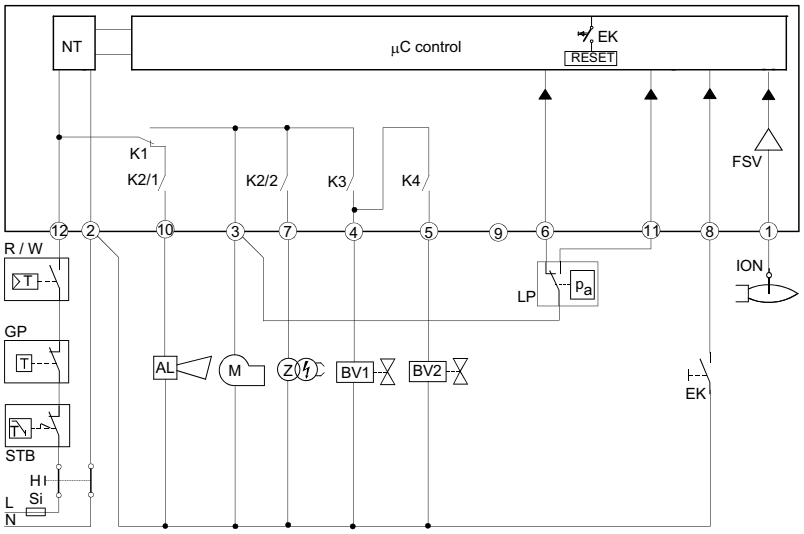

LME22 connection diagram

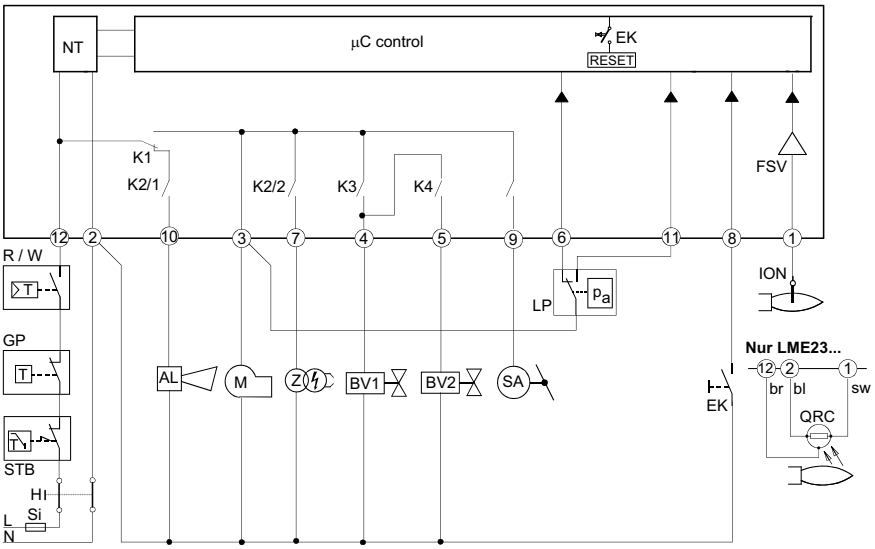

Connection diagram

AL	Error message (alarm)
BV	Fuel valve
EK2	Remote lockout reset button
FS	Flame signal
GP	Gas pressure switch
LP	Air pressure switch
LR	Load controller
M	Fan motor
R	Control thermostat/pressurestat
SB	Safety limit thermostat
W	Limit thermostat /pressure switch
Z	Ignition transformer

CONTROL PROGRAM IN THE EVENT OF FAULT

- If a fault occurs, all outputs will immediately be deactivated (in less than 1s).
- After an interruption of power, a restart will be made with the full program sequence.
- If the operating voltage drops below the undervoltage thresold, a safety shutdown is performed.
- If the operating voltage exceeds the undervoltage thresold, a restart will be performed.
- In case of extraneous light during “t1”, a lockout occurs.
- In case of extraneous light during “tw”, there is a prevention of startup and a lockout after 30 seconds.
- In case of no flame at the end of TSA, there will be max. 3 repetitions of the startup cycle, followed by a lockout at the end of TSA, for mod. LME11..; directly a lockout at the end of TSA for LME21-22 models.
- For LME11 model: if a loss of flame occurs during operation, in case of an establishment of flame at the end of TSA, there will be max. 3 repetitions, otherwise a lockout will occur.
- For LME21-22 models: if a loss of flame occurs during operation, there will be a lockout.
- If the contact of air pressure monitor LP is in working position, a prevention of startup and lockout after 65 seconds will occur.
- IIf the contact of air pressure monitor LP is in normal position, a lockout occurs at the end of t10.
- If no air pressure signal is present after completion of t1, a lockout will occur.

CONTROL BOX LOCKED

In the event of lockout, the LME.. remains locked and the red signal lamp (LED) will light up.The burner control can immediately be reset. This state is also mantained in the case fo mains failure.

DIAGNOSITICS OF THE CASUE OF FAULT

- Press the lockout reset button for more than 3 seconds to activate the visual diagnostics.
- Count the number of blinks of the red signsl lamp and check the fault condition on the “Error code table” (the device repeats the blinks for regular intervals).

During diagnostics, the control outputs are deactivated:

- the burner remains shut down;
- external fault indication is deactivated;
- fault status is showed by the red LED, inside the LME’s lockout reset buttonaccording to the “Error code table”:

ERROR CODE TABLE	
2 blinks **	**No establishment of flame at the end of TSA** - Faulty or soiled fuel valves - Faulty or soiled flame detector - Inadequate adjustement of burner, no fuel - Faulty ignition equipment
3 blinks ***	**The air pressure switch does not switch or remains in idle position:** - LP is faulty - Loss of air pressure signal after t10 - LPis welded in normal position.
4 blinks ****	- Extraneous light when burner starts up.
5 blinks *****	- LP is working position.
6 blinks *****	Free.
7 blinks *******	**Loss of flame during operation** - Faulty or soiled fuel valves - Faulty or soiled flame detector - Inadequate adjustement of burner
8 ÷ 9 blinks	Free
10 blinks **********	**Faulty output contacts** ***Attention: “lockout” remote signal (terminal no. 10) not enabled*** - Wiring error - Anomalous voltage on ouput terminals - Other faults
14 blinks ************ (only for LME4x)**	- CPI contact (gas valve microswitch) not closed.

RESETTING THE BURNER CONTROL

When lockout occurs, the burner control can immediately be reset, by pressing the lockout reset button for about 1..3 seconds. The LME.. can only be reset when all contacts in the line are closed and when there is no undervoltage.

LIMITATION OF REPETITIONS (only for LME11.. model)

If no flame is established at the end of TSA, or if the flame is lost during operation, a maximum of 3 repetitions per controller startup can be performed via “R”, otherwise lockout will be initiated. Counting of repetitions is restarted each time a controlled startup via “R” takes place.

⚠ **Condensation, formation of ice and ingress of water are not permitted!**

TECHNICAL CHARACTERISTICS

Mains voltage	120V AC +10% / -15% 230V AC +10% / -15%
Frequency	50 ... 60 Hz +/- 6%
Power consumption	12VA
External primary fuse	max. 10 A (slow)
input current at terminal 12	max. 5 A
Detection cable length	max. 3m (for electrode)
Detection cable length	max. 20 m (laid separately, for QRA probe)
Reset cable length	max. 20 m (posato separatamente)
Term. 8 & 10 cable length	max. 20 m
Thermostat cable length and other terminals	max. 3 m
Safety class	I
Index of protection	IP40 (to be ensured during mounting)
Operating conditions	-20... +60 °C, < 95% UR
Storage conditions	-20... +60 °C, < 95% UR
Weight	approx. 160 g

C.I.B. UNIGAS S.p.A.
Via L.Galvani, 9 - 35011 Campodarsego (PD) - ITALY
Tel. +39 049 9200944 - Fax +39 049 9200945/9201269
web site: www.cibunigas.it - e-mail: cibunigas@cibunigas.it

Note: specifications and data subject to change. Errors and omissions exceptd.

CIB UNIGAS

LG/NG/NGX280
LG/NG/NGX350
LG/NG/NGX400

WIRING DIAGRAMS

E039132CA Rev. 0.5 07/2015

ELECTRICAL WIRING DIAGRAMS

Eletric wiring diagrams

Wiring diagram 18-163 - Complete key

C1	LOW FLAME TIME METER
C2	HIGH FLAME TIME METER
ER	FLAME DETECTION ELECTRODE
EV1,2	GAS ELECTRO-VALVES (OR VALVES GROUP)
FU1	FAN MOTOR LINE FUSE
FU2	LINE FUSE
FU3	LINE FUSE
FU4	AUXILIARY FUSE
IL	BURNER LINE SWITCH
IM	FAN MOTOR LINE SWITCH
KM1	FAN MOTOR CONTACTOR
LAF	BURNER IN HIGH FLAME INDICATOR LIGHT
LB	INDICATOR LIGHT FOR BURNER LOCK-OUT
LBF	BURNER IN LOW FLAME INDICATOR LIGHT
LEV1	INDICATOR LIGHT FOR OPENING OF ELECTRO-VALVE EV2
LEV2	INDICATOR LIGHT FOR OPENING OF ELECTRO-VALVE EV2
LF	INDICATOR LIGHT BRUNER FUNCTIONING
LGB2x.330/LMG2x330	CONTROL BOX
LPG	INDICATOR LIGHT FOR PRESENCE OF GAS IN THE NETWORK
LTA	IGNITION TRANSFORMER INDICATOR LIGHT
MV	FAN MOTOR
PA	COMBUSTION AIR PRESSURE SWITCH
PG	MINIMUM GAS PRESSURE SWITCH
PS	LOCK-OUT RESET BUTTON
PT100	TEMPERATURE PROBE
RC	RC CIRCUIT
SATRONIC DLG976	CONTROL BOX
SATRONIC DMG972	CONTROL BOX
SD-0÷10V	VOLTAGE SIGNAL
SD-0/4÷20mA	CURRENT SIGNAL
SD-PRESS	PRESSURE PROBE
SD-TEMP	TEMPERATURE PROBE
SIEMENS LME..	CONTROL BOX
SIEMENS RWF40	MODULATORSMAMANUAL/AUTOMATIC SELECTOR
SMF	MIN-0-MAX FUNCTIONING MANUAL SELECTOR
ST	SERIES OF THERMOSTATS OR PRESSURE SWITCHES
STA/SQN72	AIR DAMPER ACTUATOR
TA	IGNITION TRANSFORMER
TAB	HIGH-LOW THERMOSTAT/PRESSURE SWITCHES
TC	THERMOCOUPLE
TS	SAFETY THERMOSTAT OR PRESSURE SWITCH
VPS504	GAS PROVING SYSTEM (OPTIONAL)
(#)	FAN MOTOR 620 W D 450W, FU2= 6,3 A F; FAN MOTOR 370 W , FU2= 10 A F
(*)	BRIDGE BETWEEN TERMINALS7 AND 9 ONLY WITH LGB21.330 (SINGLE STAGE VERSION ONLY)
(**)	SEE PROBE CONNECTION
(***)	WITH ELECTRIC SUPPLY WITHOUT NEUTRAL VERSION ONLY
($)	IF "TAB" USED REMOVE THE BRIDGE BETWEEN TERMINALS T6-T8

WARNING:

1 - Electrical supply 230V 50/60Hz 1N a.c.

2 - Do not reverse phase with neutral

3 - Ensure burner is properly earthed

LG/NG/NGX 280 Single stage - Eletric wiring diagrams - SE01-530

LG/NG/NGX 280 Double stage - Progressive - Eletric wiring diagrams - SE18-103

LG/NG/NGX 350-400 Electric wiring diagrams - SE18-163

LG/NG/NGX 350-400 Electric wiring diagrams - SE18-057

SE00_TAB1-1

KEYS

C1 LOW FLAME TIME COUNTER
C2 HIGH FLAME TIME COUNTER
FU1 FAN MOTOR LINE FUSE
FU3 BURNER LINE FUSE
IL BURNER LINE SWITCH
IM FAN MOTOR LINE SWITCH
KAB AUXILIARY RELAY
LAF BURNER IN HIGH FLAME INDICATOR LIGHT
LB INDICATOR LIGHT FOR BURNER LOCK-OUT
LBF BURNER IN LOW FLAME INDICATOR LIGHT
ST SERIES OF THERMOSTATS OR PRESSURE SWITCHES
TAB HIGH-LOW THERMOSTAT/PRESSURE SWITCHES
TS SAFETY THERMOSTAT OR PRESSURE SWITCH

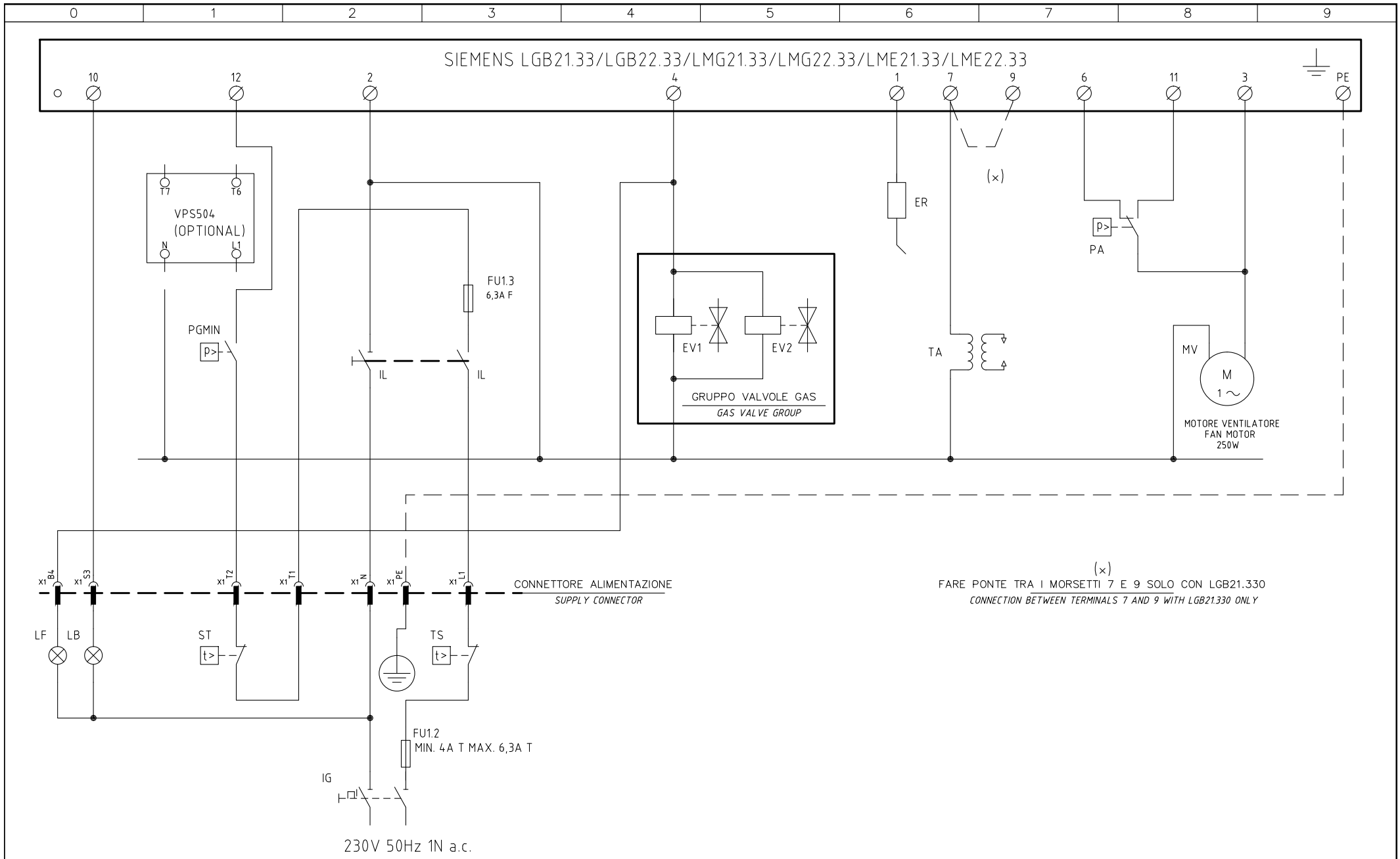

Data 21/07/2006		PREC.	FOGLIO
Revisione 00		/	1
Dis. N. 01 – 530		SEGUE	TOTALE
		2	2

0	1	2	3	4	5	6	7	8	9

SIGLA/ITEM	FOGLIO/SHEET	FUNZIONE	FUNCTION
ER	1	ELETTRODO RIVELAZIONE FIAMMA	FLAME DETECTION ELECTRODE
EV1	1	ELETTROVALVOLA GAS LATO RETE (O GRUPPO VALVOLE)	GAS ELECTRO-VALVE UPSTREAM (OR VALVES GROUP)
EV2	1	ELETTROVALVOLA GAS LATO BRUCIATORE (O GRUPPO VALVOLE)	GAS ELECTRO-VALVE DOWNSTREAM (OR VALVES GROUP)
FU1.2	1	FUSIBILE DI LINEA	LINE FUSE
FU1.3	1	FUSIBILE AUSILIARIO	AUXILIARY FUSE
IG	1	INTERRUTTORE GENERALE	MAIN DISCONNECTOR
IL	1	INTERRUTTORE LINEA BRUCIATORE	BURNER LINE SWITCH
LB	1	LAMPADA SEGNALAZIONE BLOCCO BRUCIATORE	INDICATOR LIGHT FOR BURNER LOCK-OUT
LF	1	LAMPADA SEGNALAZIONE FUNZIONAMENTO BRUCIATORE	INDICATOR LIGHT BURNER OPERATION
MV	1	MOTORE VENTILATORE	FAN MOTOR
PA	1	PRESSOSTATO ARIA COMBURENTE	COMBUSTION AIR PRESSURE SWITCH
PGMIN	1	PRESSOSTATO GAS DI MINIMA PRESSIONE	MINIMUM GAS PRESSURE SWITCH
SIEMENS LGB../LMG../LME..	1	APPARECCHIATURA CONTROLLO FIAMMA	FLAME MONITOR DEVICE
ST	1	SERIE TERMOSTATI/PRESSOSTATI	SERIES OF THERMOSTATS OR PRESSURE SWITCHES
TA	1	TRASFORMATORE DI ACCENSIONE	IGNITION TRANSFORMER
TS	1	TERMOSTATO/PRESSOSTATO DI SICUREZZA	SAFETY THERMOSTAT OR PRESSURE SWITCH
VPS504	1	CONTROLLO DI TENUTA VALVOLE GAS (OPTIONAL)	GAS LEAKAGE MONITOR DEVICE (OPTIONAL)

Data 21/07/2006		PREC.	FOGLIO
Revisione 00		1	2
Dis. N. 01 – 530		SEGUE	TOTALE
		/	2

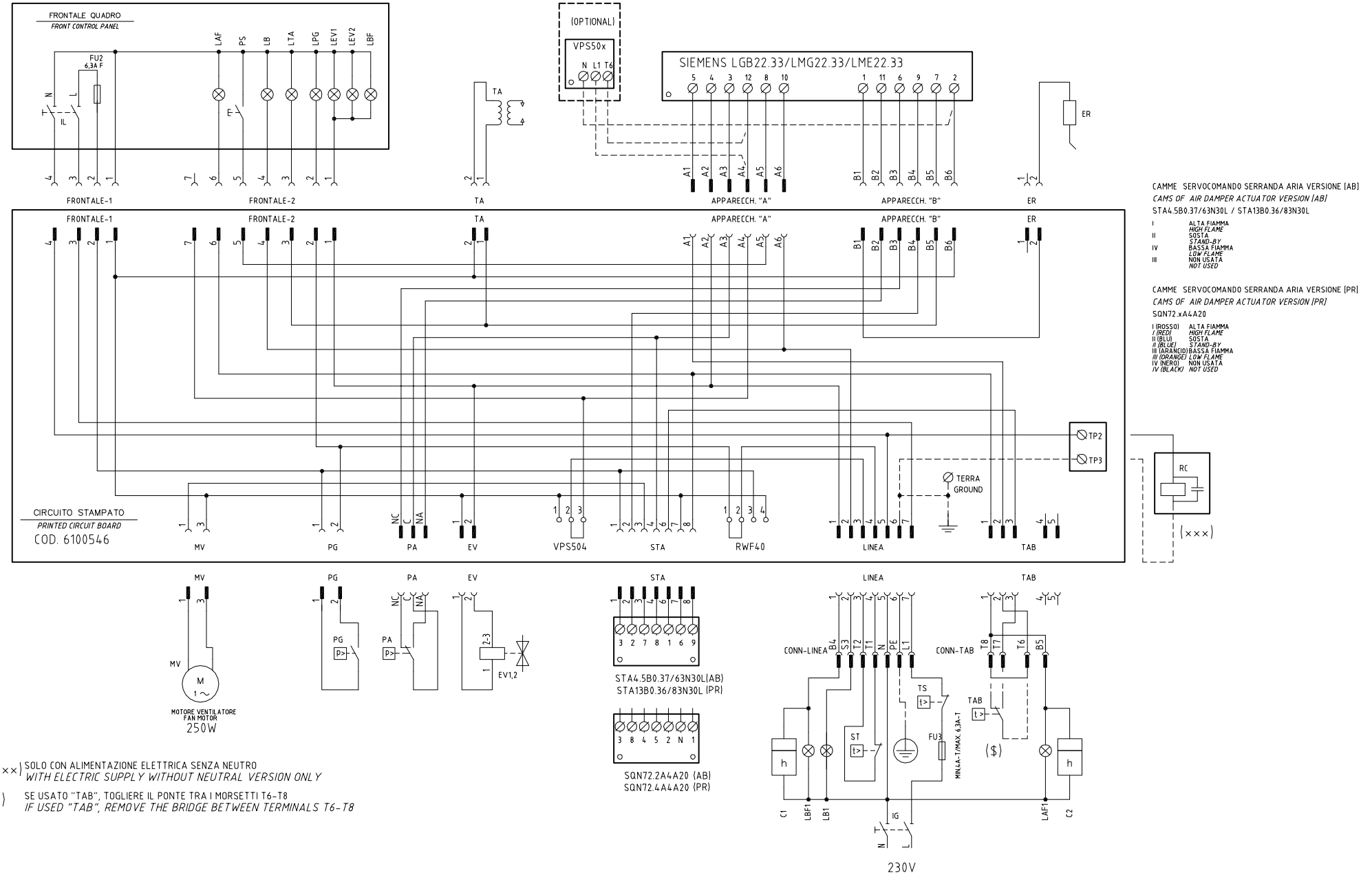

(×××) SOLO CON ALIMENTAZIONE ELETTRICA SENZA NEUTRO
WITH ELECTRIC SUPPLY WITHOUT NEUTRAL VERSION ONLY

($) SE USATO "TAB", TOGLIERE IL PONTE TRA I MORSETTI T6-T8
IF USED "TAB", REMOVE THE BRIDGE BETWEEN TERMINALS T6-T8

Data 21/07/2006		PREC.	FOGLIO
Revisione 01		/	1
Dis. N. 18 – 103	SEGUE 2		TOTALE 2

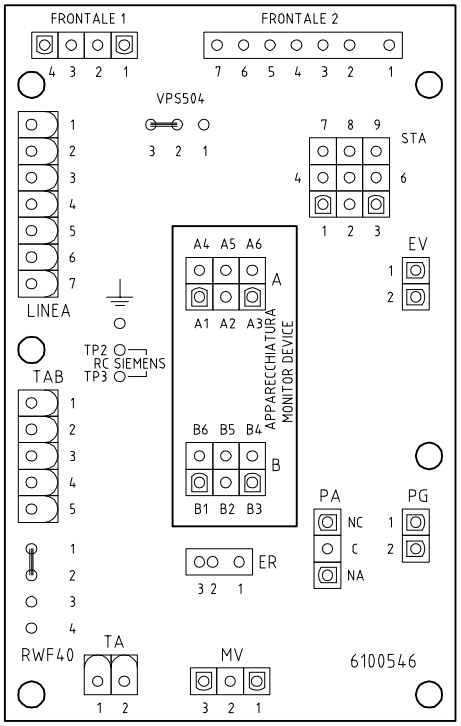

SIGLA/ITEM	FUNZIONE	FUNCTION
C1	CONTAORE BASSA FIAMMA	LOW FLAME TIME COUNTER
C2	CONTAORE ALTA FIAMMA	HIGH FLAME TIME COUNTER
ER	ELETTRODO RILEVAZIONE FIAMMA	FLAME DETECTION ELECTRODE
EV1,2	ELETTROVALVOLE GAS (O GRUPPO VALVOLE)	GAS ELECTRO-VALVES (OR VALVES GROUP)
FU2	FUSIBILE DI LINEA	LINE FUSE
FU3	FUSIBILE LINEA BRUCIATORE	BURNER LINE FUSE
IG	INTERRUTTORE LINEA BRUCIATORE	BURNER LINE SWITCH
IL	INTERRUTTORE LINEA AUSILIARI	AUXILIARY LINE SWITCH
LAF	LAMPADA SEGNALAZIONE ALTA FIAMMA BRUCIATORE	BURNER IN HIGH FLAME INDICATOR LIGHT
LAF1	LAMPADA SEGNALAZIONE ALTA FIAMMA BRUCIATORE	BURNER IN HIGH FLAME INDICATOR LIGHT
LB	LAMPADA SEGNALAZIONE BLOCCO BRUCIATORE	INDICATOR LIGHT FOR BURNER LOCK-OUT
LB1	LAMPADA SEGNALAZIONE BLOCCO BRUCIATORE	INDICATOR LIGHT FOR BURNER LOCK-OUT
LBF	LAMPADA SEGNALAZIONE BASSA FIAMMA BRUCIATORE	BURNER IN LOW FLAME INDICATOR LIGHT
LBF1	LAMPADA SEGNALAZIONE BASSA FIAMMA BRUCIATORE	BURNER IN LOW FLAME INDICATOR LIGHT
LEV1	LAMPADA SEGNALAZIONE APERTURA [EV1]	INDICATOR LIGHT FOR OPENING OF ELECTRO-VALVE [EV1]
LEV2	LAMPADA SEGNALAZIONE APERTURA [EV2]	INDICATOR LIGHT FOR OPENING OF ELECTRO-VALVE [EV2]
LPG	LAMPADA SEGNALAZIONE PRESENZA GAS IN RETE	INDICATOR LIGHT FOR PRESENCE OF GAS IN THE NETWORK
LTA	LAMPADA SEGNALAZIONE TRASFORMATORE DI ACCENSIONE	IGNITION TRANSFORMER INDICATOR LIGHT
MV	MOTORE VENTILATORE	FAN MOTOR
PA	PRESSOSTATO ARIA	AIR PRESSURE SWITCH
PG	PRESSOSTATO GAS DI MINIMA PRESSIONE	MINIMUM GAS PRESSURE SWITCH
PS	PULSANTE SBLOCCO FIAMMA	LOCK-OUT RESET BUTTON
RC	CIRCUITO RC	RC CIRCUIT
SIEMENS LGB22.33/LMG22.33/LME22.33	APPARECCHIATURA CONTROLLO FIAMMA	CONTROL BOX
SQN72.2A4A20	SERVOCOMANDO SERRANDA ARIA VERSIONE [AB]	AIR DAMPER ACTUATOR VERSION [AB]
SQN72.4A4A20	SERVOCOMANDO SERRANDA ARIA VERSIONE [PR]	AIR DAMPER ACTUATOR VERSION [PR]
ST	SERIE TERMOSTATI/PRESSOSTATI	SERIES OF THERMOSTATS OR PRESSURE SWITCHES
STA4.5B0.37/63N30L	SERVOCOMANDO SERRANDA ARIA VERSIONE [AB]	AIR DAMPER ACTUATOR VERSION [AB]
STA13B0.36/83N30L	SERVOCOMANDO SERRANDA ARIA VERSIONE [PR]	AIR DAMPER ACTUATOR VERSION [PR]
TA	TRASFORMATORE DI ACCENSIONE	IGNITION TRANSFORMER
TAB	TERMOSTATO/PRESSOSTATO ALTA-BASSA FIAMMA	HIGH-LOW THERMOSTAT/PRESSURE SWITCHES
TS	TERMOSTATO/PRESSOSTATO DI SICUREZZA	SAFETY THERMOSTAT OR PRESSURE SWITCH
VPS50x	CONTROLLO DI TENUTA VALVOLE GAS (OPTIONAL)	GAS PROVING SYSTEM (OPTIONAL)

Data 21/07/2006		PREC. 1	FOGLIO 2
Revisione 01			
Dis. N. 18 – 103		SEGUE /	TOTALE 2

VERSIONE MONOSTADIO "TN"
"TN" SINGLE-STAGE VERSION

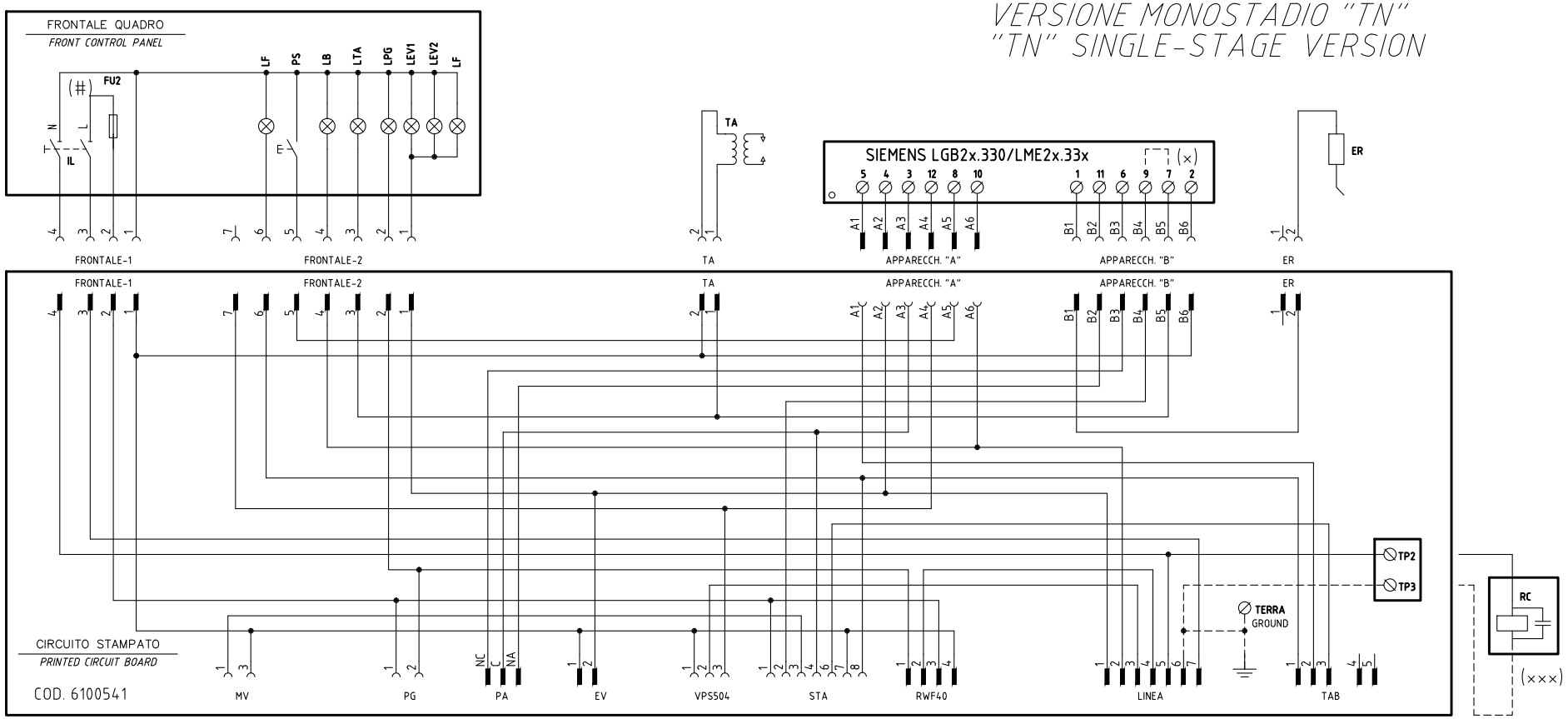

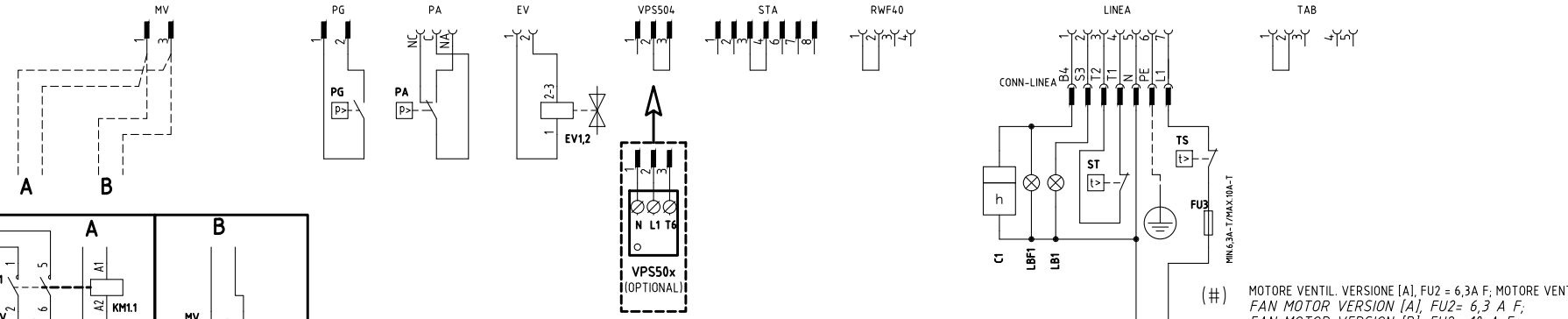

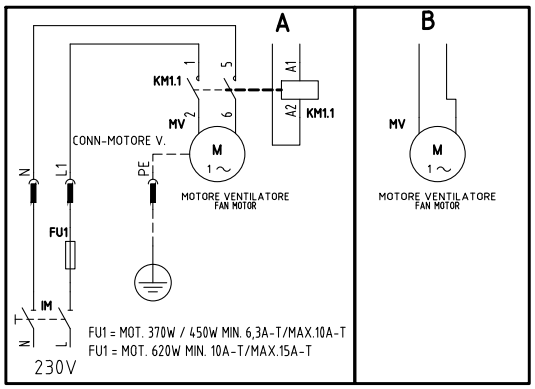

(#) MOTORE VENTIL. VERSIONE [A], FU2 = 6,3A F; MOTORE VENTIL. VERSIONE [B], FU2 = 10A F
FAN MOTOR VERSION [A], FU2= 6,3 A F;
FAN MOTOR VERSION [B], FU2= 10 A F

(×) FARE PONTE TRA I MORSETTI 7 E 9 SOLO CON LGB21.330
CONNECTION BETWEEN TERMINALS 7 AND 9 WITH LGB21.330 ONLY

(×××) SOLO CON ALIMENTAZIONE ELETTRICA SENZA NEUTRO
WITH ELECTRIC SUPPLY WITHOUT NEUTRAL VERSION ONLY

Data 19/10/2010		PREC.	FOGLIO
Revisione 05		/	1
Dis. N. 18 – 0163		SEGUE	TOTALE
		2	5

VERSIONE ALTA-BASSA FIAMMA "AB" / PROGRESSIVO "PR"
"AB" HIGH-LOW / "PR" PROGRESSIVE VERSION

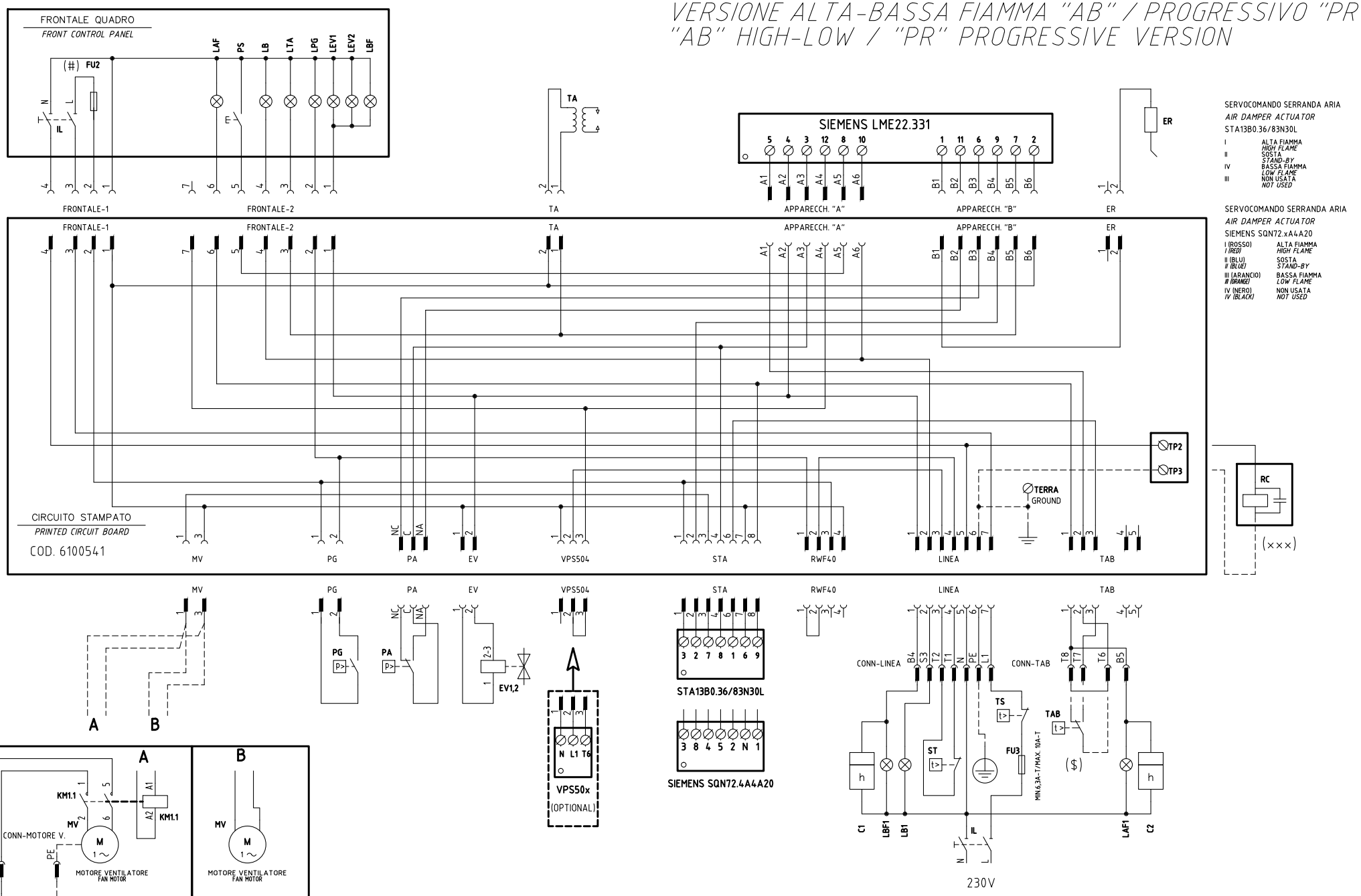

(#) MOTORE VENTIL. VERSIONE [A], FU2 = 6,3A F; MOTORE VENTIL. VERSIONE [B], FU2 = 10A F
FAN MOTOR VERSION [A], FU2= 6,3 A F;
FAN MOTOR VERSION [B], FU2= 10 A F

(×××) SOLO CON ALIMENTAZIONE ELETTRICA SENZA NEUTRO
WITH ELECTRIC SUPPLY WITHOUT NEUTRAL VERSION ONLY

($) SE USATO "TAB", TOGLIERE IL PONTE TRA I MORSETTI T6-T8
IF USED "TAB", REMOVE THE BRIDGE BETWEEN TERMINALS T6-T8

Data 19/10/2010	PREC. 1	FOGLIO 2
Revisione 05		
Dis. N. 18 – 0163	SEGUE 3	TOTALE 5

VERSIONE MODULANTE "MD"
"MD" MODULATING VERSION

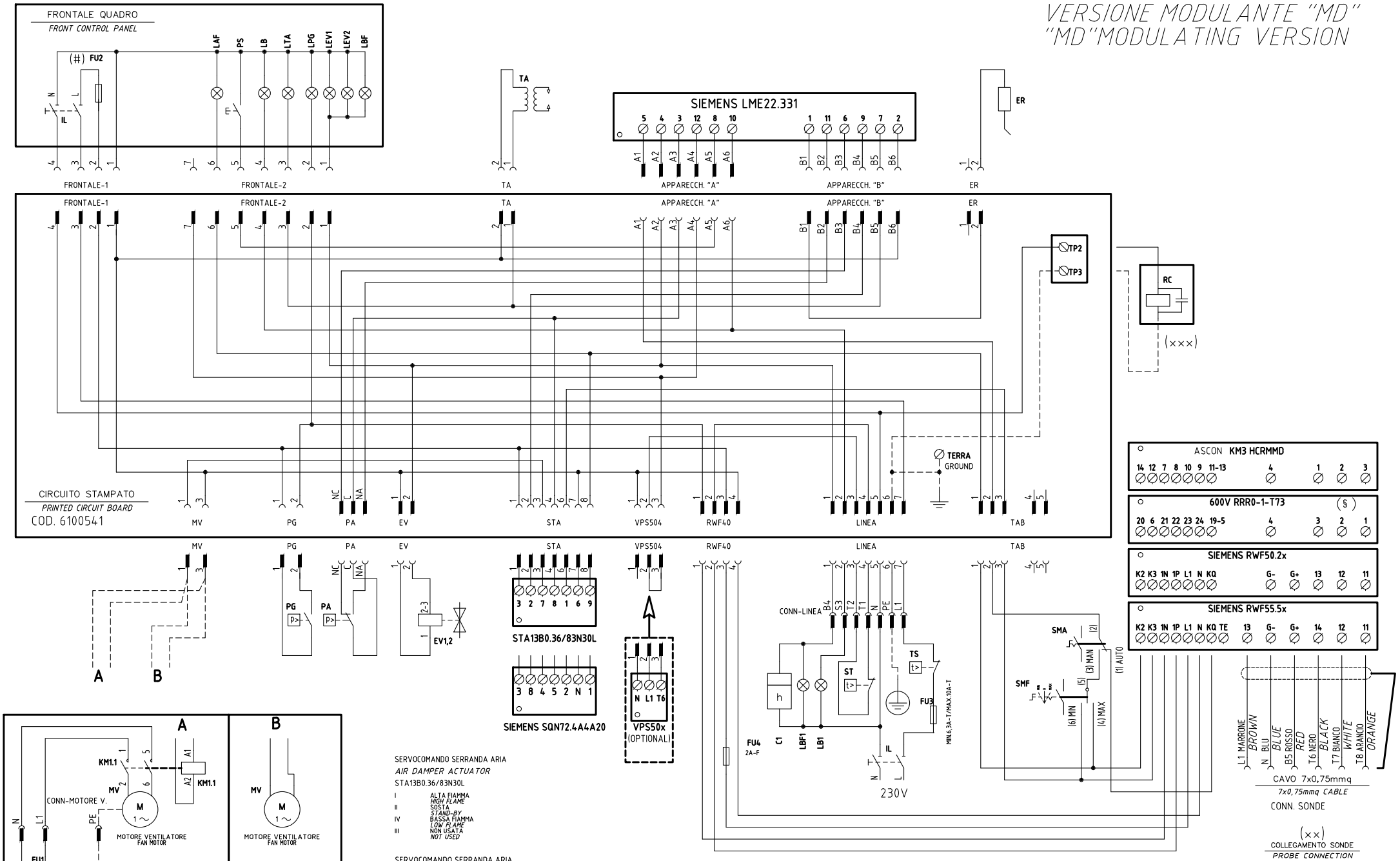

SERVOCOMANDO SERRANDA ARIA
AIR DAMPER ACTUATOR
STA13B0.36/83N30L

I	ALTA FIAMMA *HIGH FLAME*
II	SOSTA *STAND-BY*
IV	BASSA FIAMMA *LOW FLAME*
III	NON USATA *NOT USED*

SERVOCOMANDO SERRANDA ARIA
AIR DAMPER ACTUATOR
SIEMENS SQN72.xA4A20

I (ROSSO) *I (RED)*	ALTA FIAMMA *HIGH FLAME*
II (BLU) *II (BLUE)*	SOSTA *STAND-BY*
III (ARANCIO) *III (ORANGE)*	BASSA FIAMMA *LOW FLAME*
IV (NERO) *IV (BLACK)*	NON USATA *NOT USED*

(#) MOTORE VENTIL. VERSIONE [A], FU2 = 6,3A F; MOTORE VENTIL. VERSIONE [B], FU2 = 10A F
FAN MOTOR VERSION [A], FU2= 6,3 A F;
FAN MOTOR VERSION [B], FU2= 10 A F

(×××) SOLO CON ALIMENTAZIONE ELETTRICA SENZA NEUTRO
WITH ELECTRIC SUPPLY WITHOUT NEUTRAL VERSION ONLY

Data	19/10/2010	PREC. 2	FOGLIO 3
Revisione	05		
Dis. N.	18 – 0163	SEGUE 4	TOTALE 5

(××)
ATTENZIONE COLLEGAMENTO SONDE CON CONNETTORE 7 POLI
WARNING PROBE CONNECTION WITH 7 PINS CONNECTOR

KM3 HCRMMD

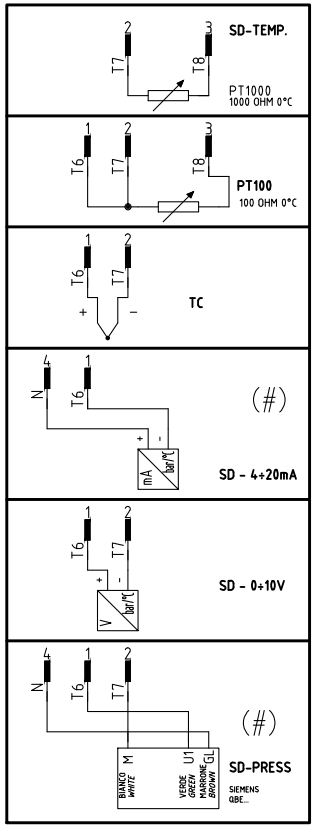

600V RRR0-1-T73

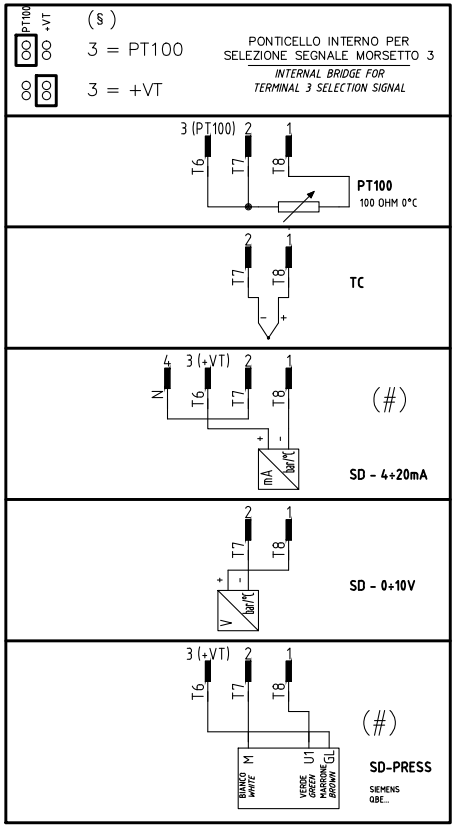

RWF55.5x

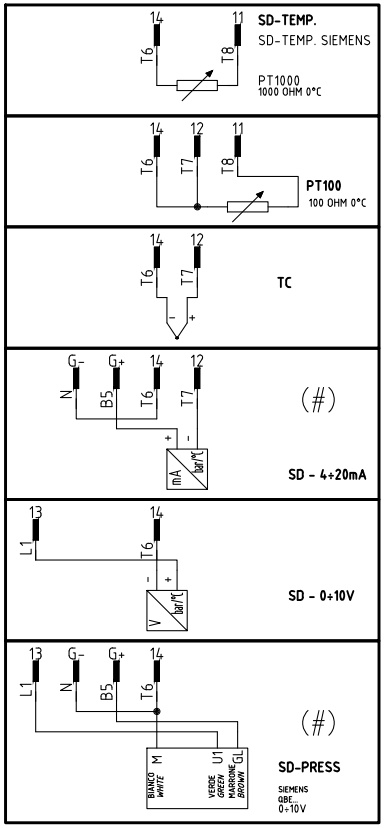

RWF50.2x

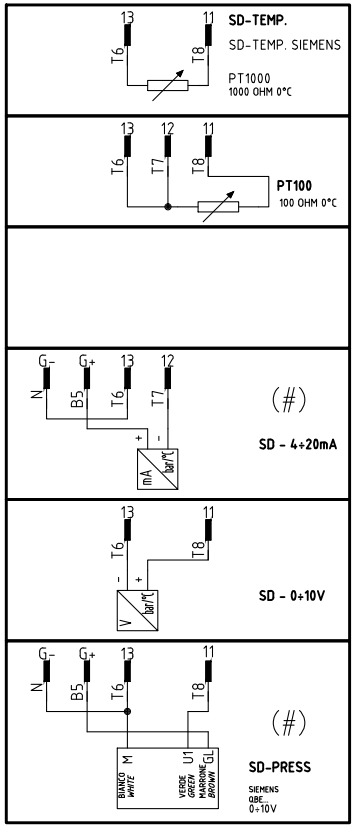

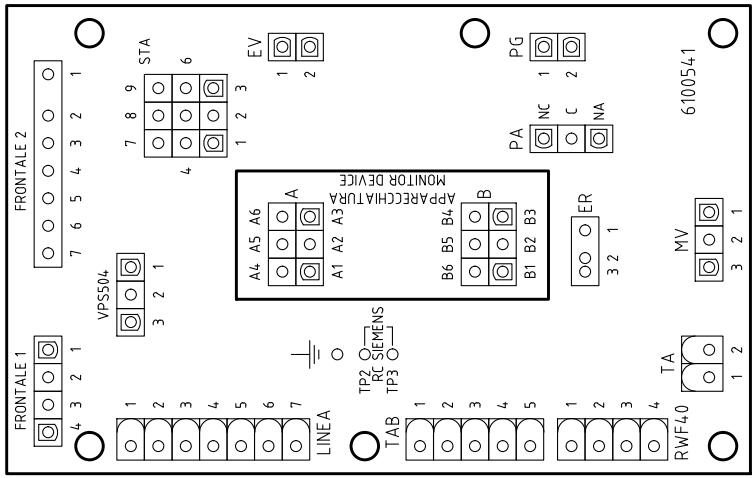

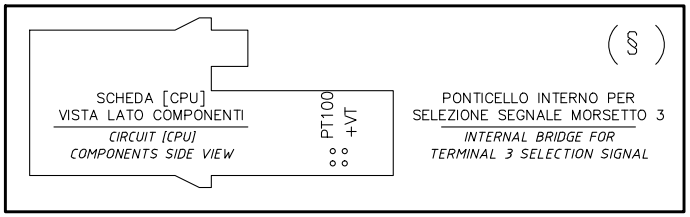

Data 19/10/2010		PREC. 3	FOGLIO 4
Revisione 05			
Dis. N. 18 – 0163		SEGUE 5	TOTALE 5

Sigla/Item	Funzione	Function
600V RRR0-1-T73	REGOLATORE MODULANTE (ALTERNATIVO)	BURNER MODULATOR (ALTERNATIVE)
C1	CONTAORE BASSA FIAMMA	LOW FLAME TIME COUNTER
C2	CONTAORE ALTA FIAMMA	HIGH FLAME TIME COUNTER
ER	ELETTRODO RILEVAZIONE FIAMMA	FLAME DETECTION ELECTRODE
EV1,2	ELETTROVALVOLE GAS (O GRUPPO VALVOLE)	GAS ELECTRO-VALVES (OR VALVES GROUP)
FU1	FUSIBILE LINEA MOTORE VENTILATORE	FAN MOTOR LINE FUSE
FU2	FUSIBILE DI LINEA	LINE FUSE
FU3	FUSIBILE DI LINEA	LINE FUSE
FU4	FUSIBILE AUSILIARIO	AUXILIARY FUSE
IL	INTERRUTTORE LINEA BRUCIATORE	BURNER LINE SWITCH
IM	INTERRUTTORE LINEA MOTORE VENTILATORE	FAN MOTOR LINE SWITCH
KM1.1	CONTATTORE MOTORE VENTILATORE	FAN MOTOR CONTACTOR
KM3 HCRMMD	REGOLATORE MODULANTE (ALTERNATIVO)	BURNER MODULATOR (ALTERNATIVE)
LAF	LAMPADA SEGNALAZIONE ALTA FIAMMA BRUCIATORE	BURNER IN HIGH FLAME INDICATOR LIGHT
LAF1	LAMPADA SEGNALAZIONE ALTA FIAMMA BRUCIATORE	BURNER IN HIGH FLAME INDICATOR LIGHT
LB	LAMPADA SEGNALAZIONE BLOCCO BRUCIATORE	INDICATOR LIGHT FOR BURNER LOCK-OUT
LB1	LAMPADA SEGNALAZIONE BLOCCO BRUCIATORE	INDICATOR LIGHT FOR BURNER LOCK-OUT
LBF	LAMPADA SEGNALAZIONE BASSA FIAMMA BRUCIATORE	BURNER IN LOW FLAME INDICATOR LIGHT
LBF1	LAMPADA SEGNALAZIONE BASSA FIAMMA BRUCIATORE	BURNER IN LOW FLAME INDICATOR LIGHT
LEV1	LAMPADA SEGNALAZIONE APERTURA [EV1]	INDICATOR LIGHT FOR OPENING OF ELECTRO-VALVE [EV1]
LEV2	LAMPADA SEGNALAZIONE APERTURA [EV2]	INDICATOR LIGHT FOR OPENING OF ELECTRO-VALVE [EV2]
LF	LAMPADA SEGNALAZIONE FUNZIONAMENTO BRUCIATORE	INDICATOR LIGHT BURNER OPERATION
LPG	LAMPADA SEGNALAZIONE PRESENZA GAS IN RETE	INDICATOR LIGHT FOR PRESENCE OF GAS IN THE NETWORK
LTA	LAMPADA SEGNALAZIONE TRASFORMATORE DI ACCENSIONE	IGNITION TRANSFORMER INDICATOR LIGHT
MV	MOTORE VENTILATORE	FAN MOTOR
PA	PRESSOSTATO ARIA	AIR PRESSURE SWITCH
PG	PRESSOSTATO GAS DI MINIMA PRESSIONE	MINIMUM GAS PRESSURE SWITCH
PS	PULSANTE SBLOCCO FIAMMA	FLAME UNLOCK BUTTON
PT100	SONDA DI TEMPERATURA	TEMPERATURE PROBE
RC	CIRCUITO RC	RC CIRCUIT
SD-PRESS	SONDA DI PRESSIONE	PRESSURE PROBE
SD-TEMP.	SONDA DI TEMPERATURA	TEMPERATURE PROBE
SD - 0÷10V	TRASDUTTORE USCITA IN TENSIONE	TRANSDUCER VOLTAGE OUTPUT
SD - 4÷20mA	TRASDUTTORE USCITA IN CORRENTE	TRANSDUCER CURRENT OUTPUT
SIEMENS LGB2x.330/LME2x.33x	APPARECCHIATURA CONTROLLO FIAMMA	CONTROL BOX
SIEMENS LME22.331	APPARECCHIATURA CONTROLLO FIAMMA	CONTROL BOX
SIEMENS RWF50.2x	REGOLATORE MODULANTE	BURNER MODULATOR
SIEMENS RWF55.5x	REGOLATORE MODULANTE (ALTERNATIVO)	BURNER MODULATOR (ALTERNATIVE)
SIEMENS SQN72.4A4A20	SERVOCOMANDO SERRANDA ARIA (ALTERNATIVO)	AIR DAMPER ACTUATOR (ALTERNATIVE)
SMA	SELETTORE MANUALE/AUTOMATICO	MANUAL/AUTOMATIC SWITCH
SMF	SELETTORE MANUALE FUNZIONAMENTO MIN-0-MAX	MIN-0-MAX MANUAL OPERATION SWITCH
ST	SERIE TERMOSTATI/PRESSOSTATI	SERIES OF THERMOSTATS OR PRESSURE SWITCHES
STA13B0.36/83N30L	SERVOCOMANDO SERRANDA ARIA	AIR DAMPER ACTUATOR
TA	TRASFORMATORE DI ACCENSIONE	IGNITION TRANSFORMER
TAB	TERMOSTATO/PRESSOSTATO ALTA-BASSA FIAMMA	HIGH-LOW THERMOSTAT/PRESSURE SWITCHES
TC	TERMOCOPPIA	THERMOCOUPLE
TS	TERMOSTATO/PRESSOSTATO DI SICUREZZA	SAFETY THERMOSTAT OR PRESSURE SWITCH
VPS50x	CONTROLLO DI TENUTA VALVOLE GAS (OPTIONAL)	GAS PROVING SYSTEM (OPTIONAL)

Data 19/10/2010		PREC. 4	FOGLIO 5
Revisione 05			
Dis. N. 18 - 0163		SEGUE /	TOTALE 5

VERSIONE MONOSTADIO "TN"
"TN" SINGLE-STAGE VERSION

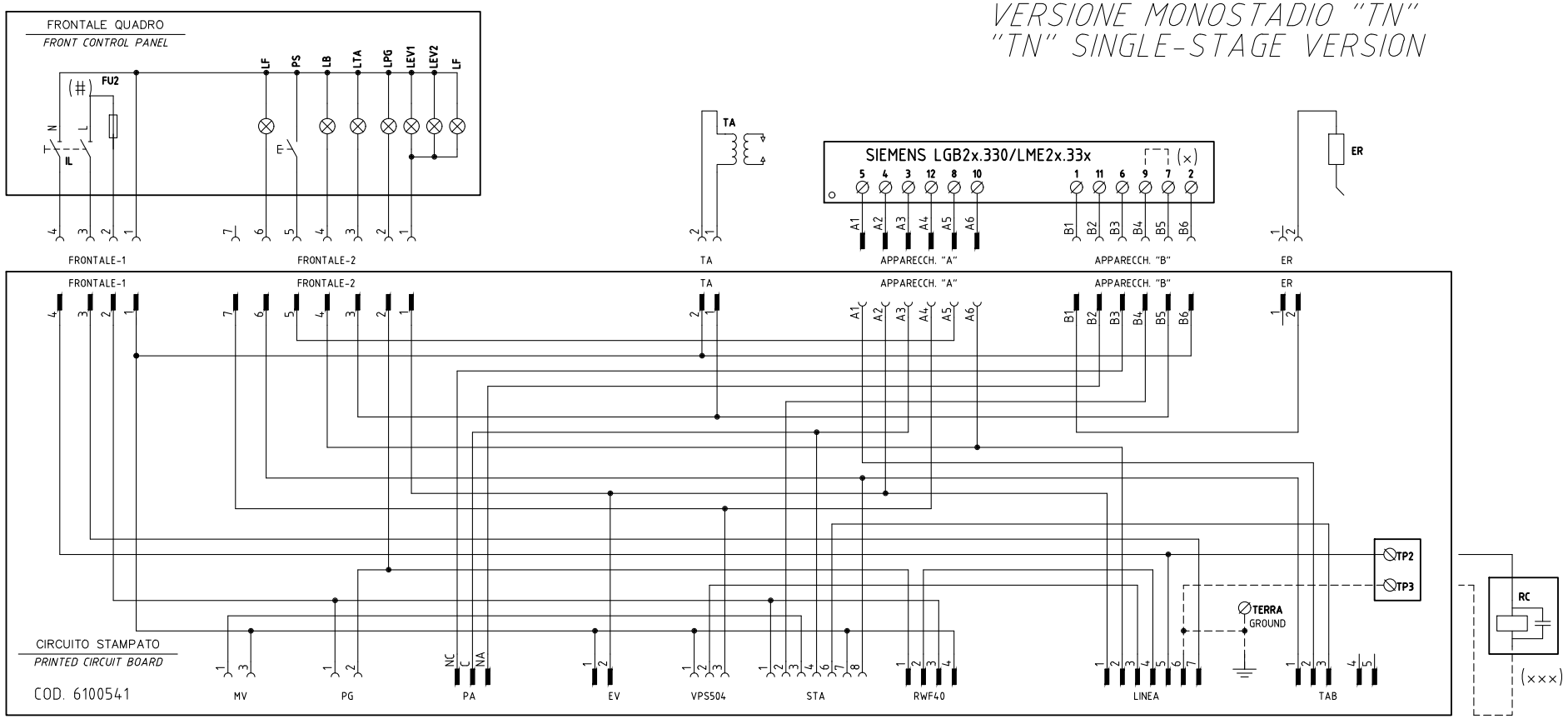

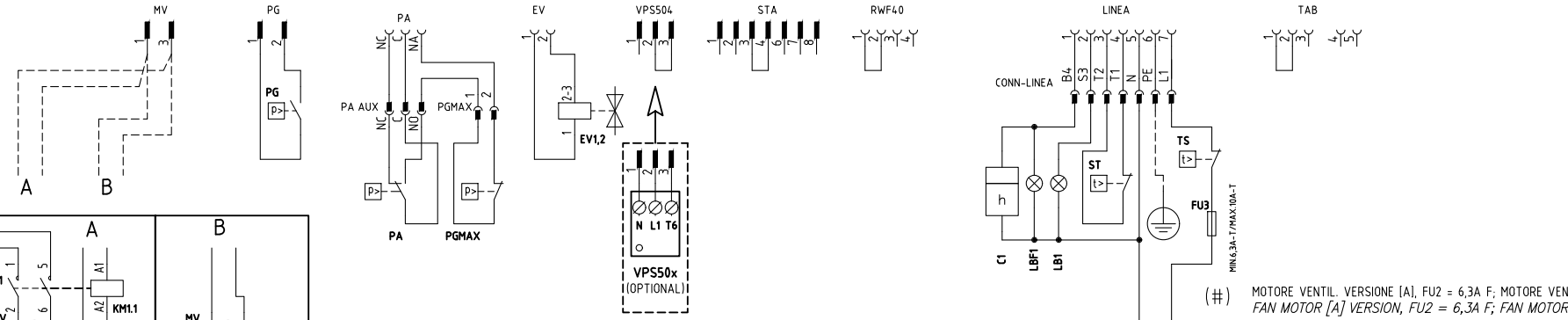

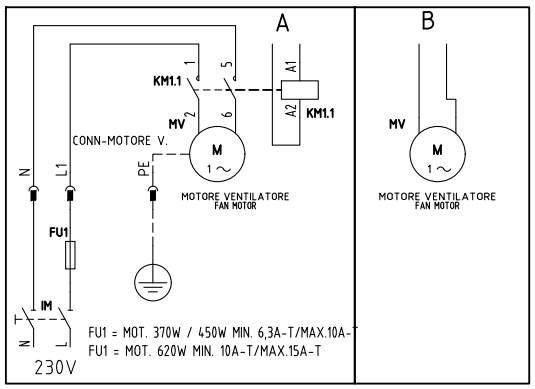

(#) MOTORE VENTIL. VERSIONE [A], FU2 = 6,3A F; MOTORE VENTIL. VERSIONE [B], FU2 = 10A F
FAN MOTOR [A] VERSION, FU2 = 6,3A F; FAN MOTOR [B] VERSION FU2 = 10A F

(×) FARE PONTE TRA I MORSETTI 7 E 9 SOLO CON LGB21.330
CONNECTION BETWEEN TERMINALS 7 AND 9 WITH LGB21.330 ONLY

(×××) SOLO CON ALIMENTAZIONE ELETTRICA SENZA NEUTRO
WITH ELECTRIC SUPPLY WITHOUT NEUTRAL VERSION ONLY

Data 14/01/2005		PREC. /	FOGLIO 1
Revisione 07			
Dis. N. 18 – 0057		SEGUE 2	TOTALE 5

VERSIONE ALTA-BASSA FIAMMA "AB" / PROGRESSIVO "PR"
"AB" HIGH-LOW / "PR" PROGRESSIVE VERSION

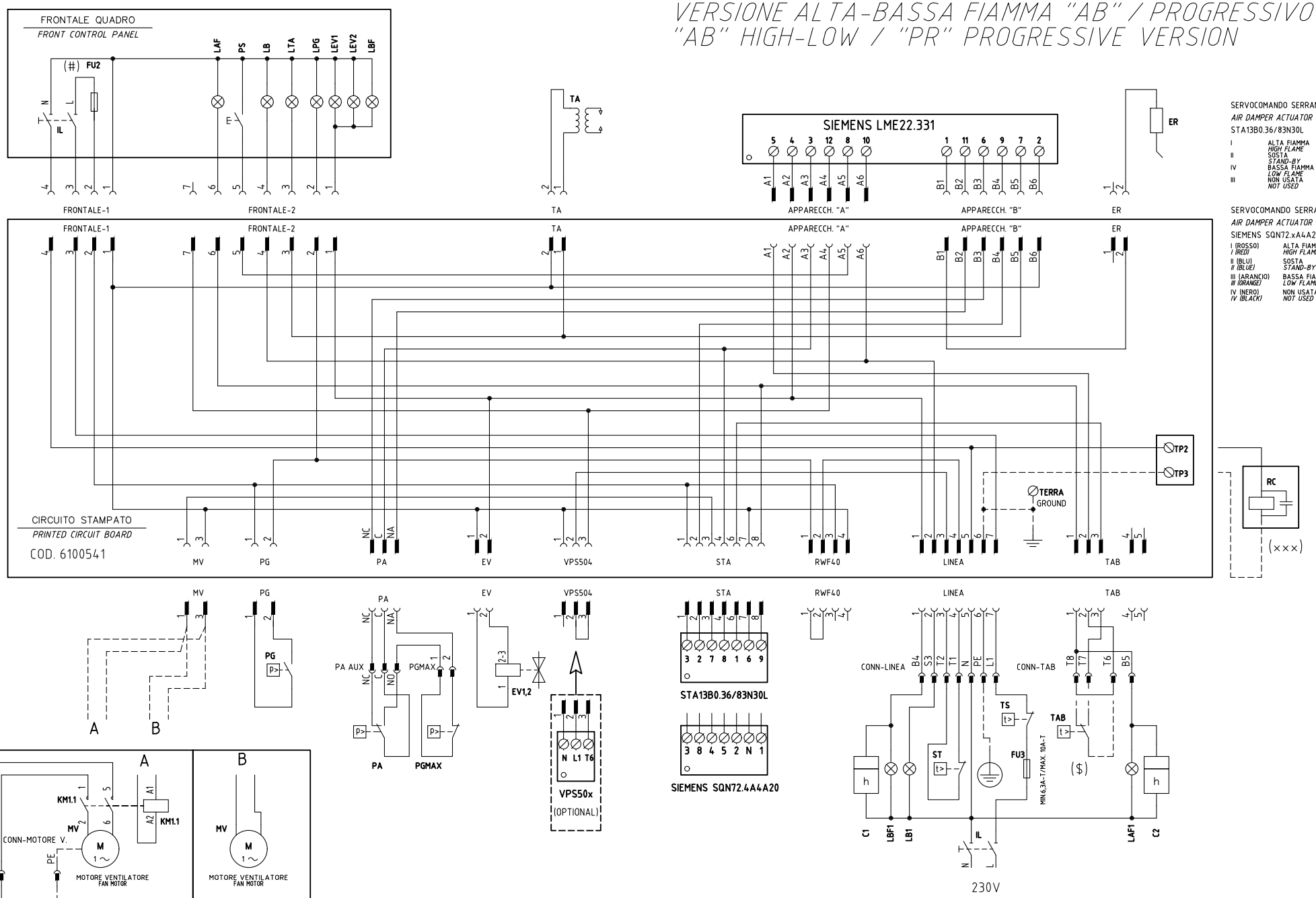

(#) MOTORE VENTIL. VERSIONE [A], FU2 = 6,3A F; MOTORE VENTIL. VERSIONE [B], FU2 = 10A F
FAN MOTOR [A] VERSION, FU2 = 6,3A F; FAN MOTOR [B] VERSION FU2 = 10A F

(×××) SOLO CON ALIMENTAZIONE ELETTRICA SENZA NEUTRO
WITH ELECTRIC SUPPLY WITHOUT NEUTRAL VERSION ONLY

($) SE USATO "TAB", TOGLIERE IL PONTE TRA I MORSETTI T6-T8
IF USED "TAB", REMOVE THE BRIDGE BETWEEN TERMINALS T6-T8

Data 14/01/2005	PREC. 1	FOGLIO 2
Revisione 07		
Dis. N. 18 – 0057	SEGUE 3	TOTALE 5

VERSIONE MODULANTE "MD"
"MD" MODULATING VERSION

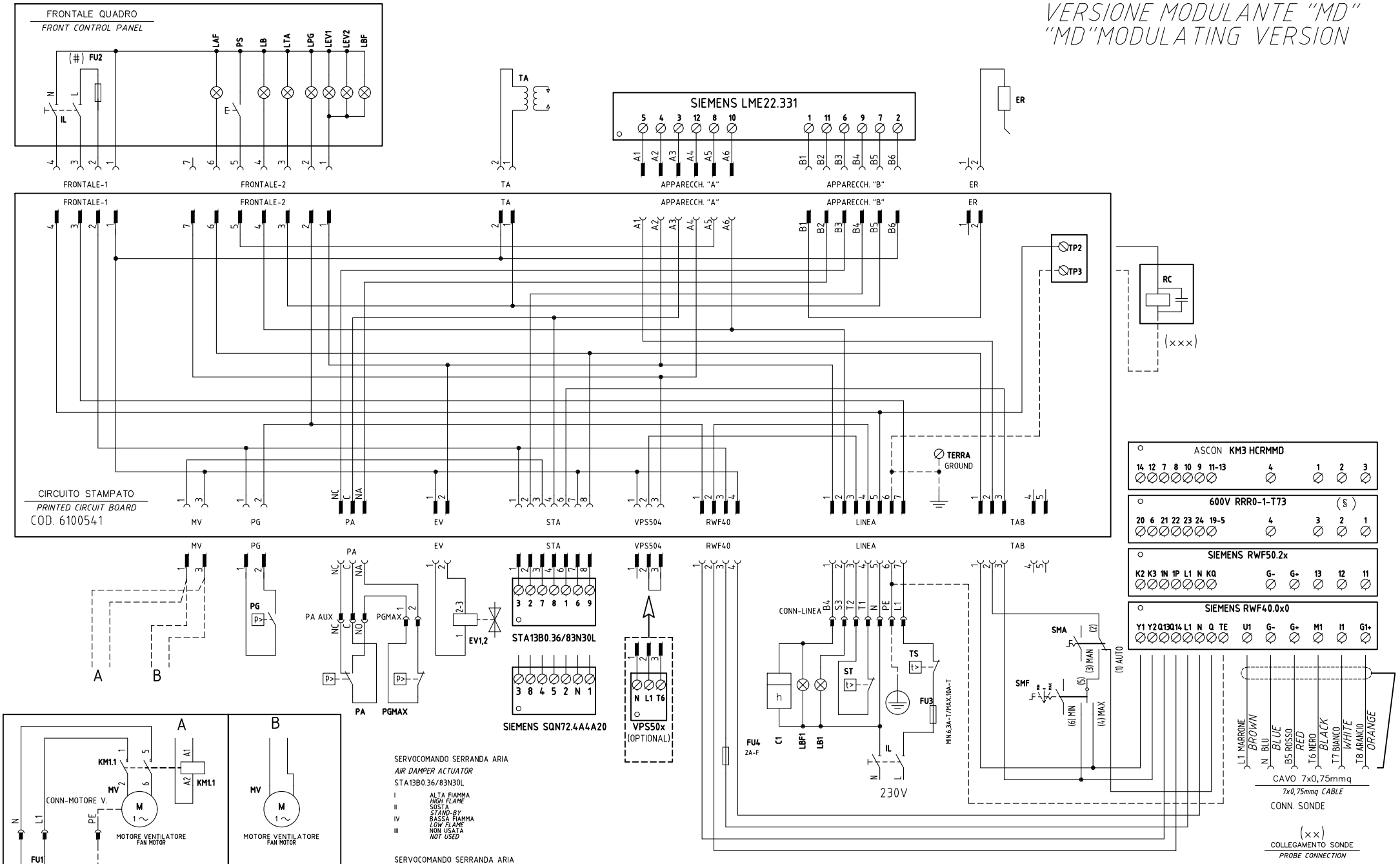

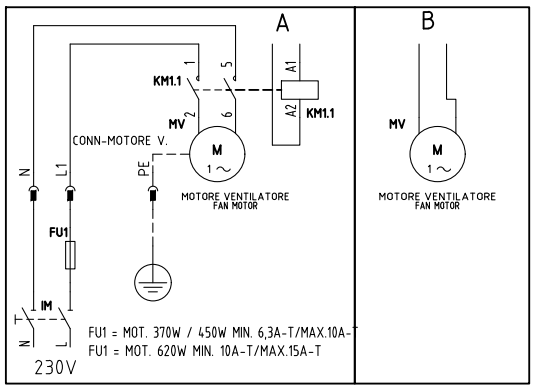

SERVOCOMANDO SERRANDA ARIA
AIR DAMPER ACTUATOR
STA13B0.36/83N30L

I	ALTA FIAMMA *HIGH FLAME*
II	SOSTA *STAND-BY*
IV	BASSA FIAMMA *LOW FLAME*
III	NON USATA *NOT USED*

SERVOCOMANDO SERRANDA ARIA
AIR DAMPER ACTUATOR
SIEMENS SQN72.xA4A20

I (ROSSO) *I (RED)*	ALTA FIAMMA *HIGH FLAME*
II (BLU) *II (BLUE)*	SOSTA *STAND-BY*
III (ARANCIO) *III (ORANGE)*	BASSA FIAMMA *LOW FLAME*
IV (NERO) *IV (BLACK)*	NON USATA *NOT USED*

(#) MOTORE VENTIL. VERSIONE [A], FU2 = 6,3A F; MOTORE VENTIL. VERSIONE [B], FU2 = 10A F
FAN MOTOR [A] VERSION, FU2 = 6,3A F; FAN MOTOR [B] VERSION FU2 = 10A F

(×××) SOLO CON ALIMENTAZIONE ELETTRICA SENZA NEUTRO
WITH ELECTRIC SUPPLY WITHOUT NEUTRAL VERSION ONLY

Data	14/01/2005	PREC. 2	FOGLIO 3
Revisione	07		
Dis. N.	18 – 0057	SEGUE 4	TOTALE 5

(xx)
ATTENZIONE COLLEGAMENTO SONDE CON CONNETTORE 7 POLI
WARNING PROBE CONNECTION WITH 7 PINS CONNECTOR

KM3 HCRMMD

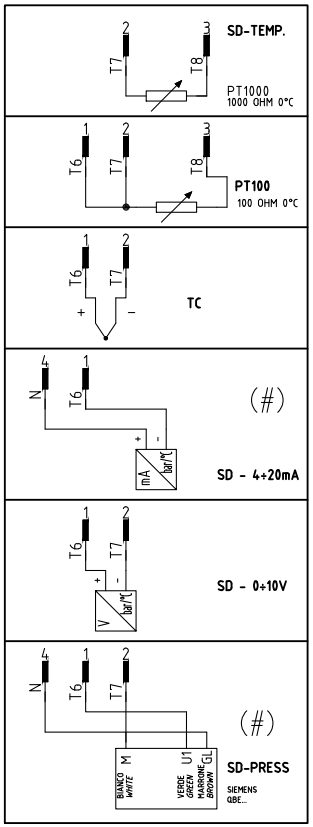

600V RRR0-1-T73

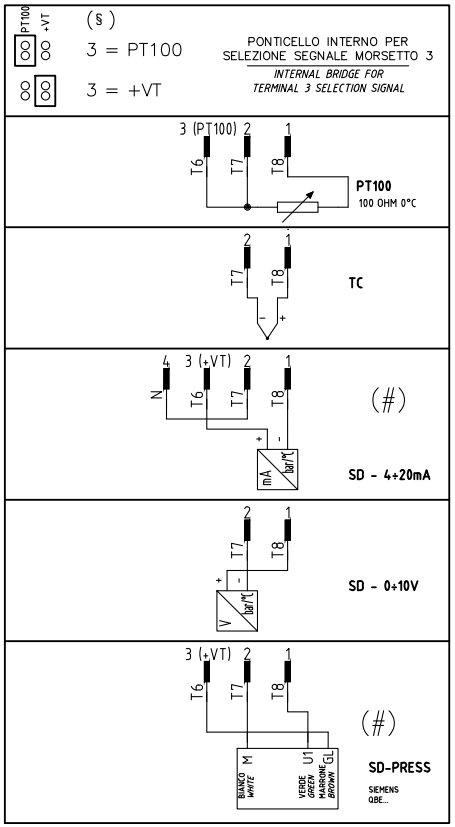

RWF55.5x

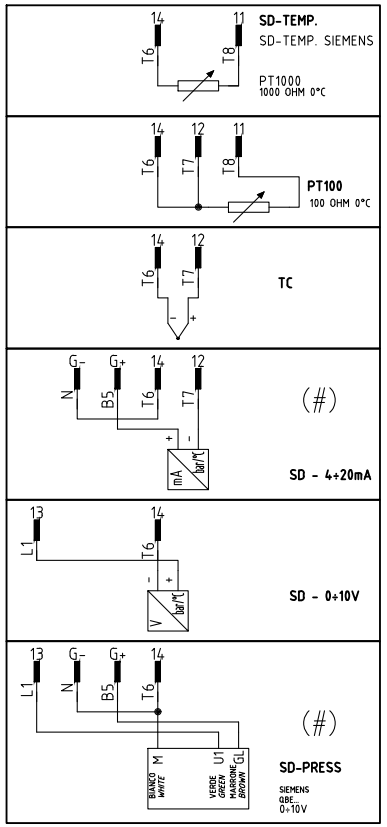

RWF50.2x

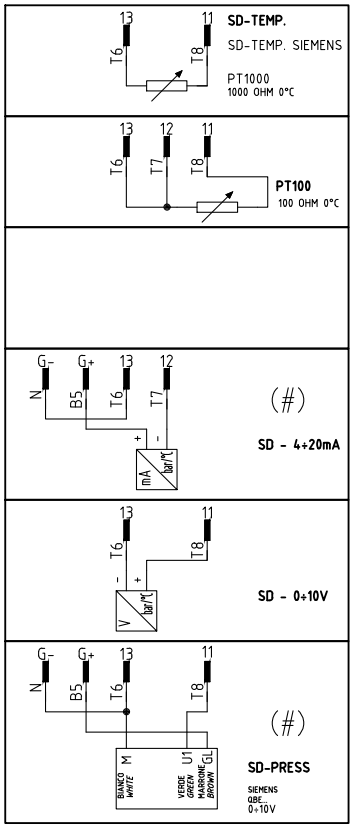

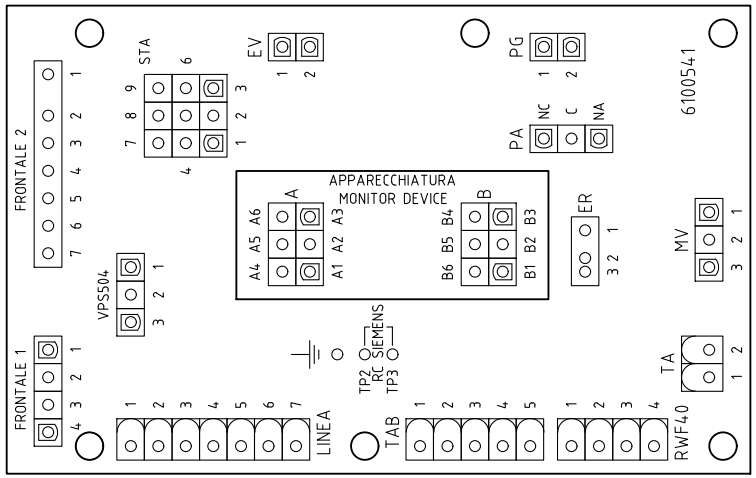

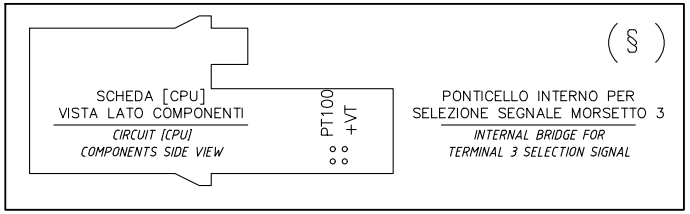

Data 14/01/2005		PREC. 3	FOGLIO 4
Revisione 07			
Dis. N. 18 – 0057		SEGUE 5	TOTALE 5

Sigla/Item	Funzione	Function
PGMAX	PRESSOSTATO GAS DI MASSIMA PRESSIONE	MAXIMUM PRESSURE GAS SWITCH
600V RRR0-1-T73	REGOLATORE MODULANTE (ALTERNATIVO)	BURNER MODULATOR (ALTERNATIVE)
C1	CONTAORE BASSA FIAMMA	LOW FLAME TIME COUNTER
C2	CONTAORE ALTA FIAMMA	HIGH FLAME TIME COUNTER
ER	ELETTRODO RILEVAZIONE FIAMMA	FLAME DETECTION ELECTRODE
EV1,2	ELETTROVALVOLE GAS (O GRUPPO VALVOLE)	GAS ELECTRO-VALVES (OR VALVES GROUP)
FU1	FUSIBILE LINEA MOTORE VENTILATORE	FAN MOTOR LINE FUSE
FU2	FUSIBILE DI LINEA	LINE FUSE
FU3	FUSIBILE DI LINEA	LINE FUSE
FU4	FUSIBILE AUSILIARIO	AUXILIARY FUSE
IL	INTERRUTTORE LINEA BRUCIATORE	BURNER LINE SWITCH
IM	INTERRUTTORE LINEA MOTORE VENTILATORE	FAN MOTOR LINE SWITCH
KM1.1	CONTATTORE MOTORE VENTILATORE	FAN MOTOR CONTACTOR
KM3 HCRMMD	REGOLATORE MODULANTE (ALTERNATIVO)	BURNER MODULATOR (ALTERNATIVE)
LAF	LAMPADA SEGNALAZIONE ALTA FIAMMA BRUCIATORE	BURNER IN HIGH FLAME INDICATOR LIGHT
LAF1	LAMPADA SEGNALAZIONE ALTA FIAMMA BRUCIATORE	BURNER IN HIGH FLAME INDICATOR LIGHT
LB	LAMPADA SEGNALAZIONE BLOCCO BRUCIATORE	INDICATOR LIGHT FOR BURNER LOCK-OUT
LB1	LAMPADA SEGNALAZIONE BLOCCO BRUCIATORE	INDICATOR LIGHT FOR BURNER LOCK-OUT
LBF	LAMPADA SEGNALAZIONE BASSA FIAMMA BRUCIATORE	BURNER IN LOW FLAME INDICATOR LIGHT
LBF1	LAMPADA SEGNALAZIONE BASSA FIAMMA BRUCIATORE	BURNER IN LOW FLAME INDICATOR LIGHT
LEV1	LAMPADA SEGNALAZIONE APERTURA [EV1]	INDICATOR LIGHT FOR OPENING OF ELECTRO-VALVE [EV1]
LEV2	LAMPADA SEGNALAZIONE APERTURA [EV2]	INDICATOR LIGHT FOR OPENING OF ELECTRO-VALVE [EV2]
LF	LAMPADA SEGNALAZIONE FUNZIONAMENTO BRUCIATORE	INDICATOR LIGHT BURNER OPERATION
LPG	LAMPADA SEGNALAZIONE PRESENZA GAS IN RETE	INDICATOR LIGHT FOR PRESENCE OF GAS IN THE NETWORK
LTA	LAMPADA SEGNALAZIONE TRASFORMATORE DI ACCENSIONE	IGNITION TRANSFORMER INDICATOR LIGHT
MV	MOTORE VENTILATORE	FAN MOTOR
PA	PRESSOSTATO ARIA	AIR PRESSURE SWITCH
PG	PRESSOSTATO GAS DI MINIMA PRESSIONE	MINIMUM GAS PRESSURE SWITCH
PS	PULSANTE SBLOCCO FIAMMA	FLAME UNLOCK BUTTON
RC	CIRCUITO RC	RC CIRCUIT
SIEMENS LGB2x.330/LME2x.33x	APPARECCHIATURA CONTROLLO FIAMMA	CONTROL BOX
SIEMENS LME22.331	APPARECCHIATURA CONTROLLO FIAMMA	CONTROL BOX
SIEMENS RWF40.0x0	REGOLATORE MODULANTE	BURNER MODULATOR
SIEMENS RWF50.2x	REGOLATORE MODULANTE (ALTERNATIVO)	BURNER MODULATOR (ALTERNATIVE)
SIEMENS SQN72.4A4A20	SERVOCOMANDO SERRANDA ARIA (ALTERNATIVO)	AIR DAMPER ACTUATOR (ALTERNATIVE)
SMA	SELETTORE MANUALE/AUTOMATICO	MANUAL/AUTOMATIC SWITCH
SMF	SELETTORE MANUALE FUNZIONAMENTO MIN-0-MAX	MIN-0-MAX MANUAL OPERATION SWITCH
ST	SERIE TERMOSTATI/PRESSOSTATI	SERIES OF THERMOSTATS OR PRESSURE SWITCHES
STA13B0.36/83N30L	SERVOCOMANDO SERRANDA ARIA	AIR DAMPER ACTUATOR
TA	TRASFORMATORE DI ACCENSIONE	IGNITION TRANSFORMER
TAB	TERMOSTATO/PRESSOSTATO ALTA-BASSA FIAMMA	HIGH-LOW THERMOSTAT/PRESSURE SWITCHES
TS	TERMOSTATO/PRESSOSTATO DI SICUREZZA	SAFETY THERMOSTAT OR PRESSURE SWITCH
VPS50x	CONTROLLO DI TENUTA VALVOLE GAS (OPTIONAL)	GAS PROVING SYSTEM (OPTIONAL)

Data 14/01/2005		PREC. 4	FOGLIO 5
Revisione 07			
Dis. N. 18 – 0057		SEGUE /	TOTALE 5

VERSIONE ALTA-BASSA FIAMMA / PROGRESSIVO CON RELE' "KAB" DI SEZIONAMENTO
HIGH-LOW / PROGRESSIVE VERSION WITH "KAB" SECTIONING RELAY
ИСПОЛНЕНИЕ ДВУХСТУПЕНЧАТОЕ/ПРОГРЕССИВНОЕ С РАЗДЕЛИТЕЛЬНЫМ РЕЛЕ «KAB»

CONNETTORE [3] POLI
[3] PINS CONNECTOR
[3] –ТИ ПОЛЮСНЫЙ СОЕДИНИТЕЛЬНЫЙ РАЗЪЕМ

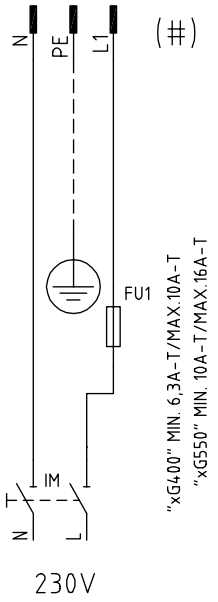

CONNETTORE [7] POLI
[7] PINS CONNECTOR
[7] –ТИ ПОЛЮСНЫЙ СОЕДИНИТЕЛЬНЫЙ РАЗЪЕМ

CONNETTORE [4] POLI
[4] PINS CONNECTOR
[4] –ТИ ПОЛЮСНЫЙ СОЕДИНИТЕЛЬНЫЙ РАЗЪЕМ

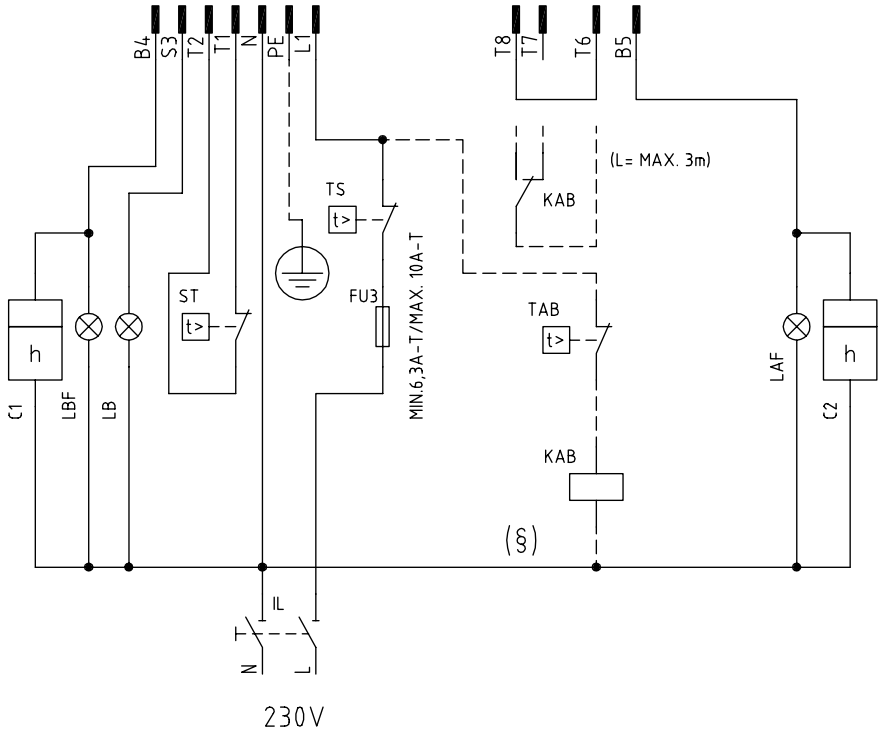

(#) ESCLUSO TIPO [xG350]
ESCLUDED TYPE [xG350]
ЗА ИСКЛЮЧЕНИЕМ ТИПА [xG350]

(§) SE USATO, TOGLIERE IL PONTE TRA I MORSETTI T6-T8
IF USED, REMOVE THE BRIDGE BETWEEN TERMINALS T6-T8
ЕСЛИ ИСПОЛЬЗУЕТСЯ, СНЯТЬ ПЕРЕМЫЧКУ МЕЖДУ КЛЕММАМИ T6 – T8

Data 26/06/2008		PREC. /	FOGLIO 1
Revisione 00			
Dis. N. TAB_1		SEGUE 2	TOTALE 1

0	1	2	3	4	5	6	7	8	9

SIGLA/ITEM	FUNZIONE	FUNCTION
C1	CONTAORE BASSA FIAMMA	LOW FLAME TIME COUNTER
C2	CONTAORE ALTA FIAMMA	HIGH FLAME TIME COUNTER
FU1	FUSIBILE LINEA MOTORE VENTILATORE	FAN MOTOR LINE FUSE
FU3	FUSIBILE LINEA BRUCIATORE	BURNER LINE FUSE
IL	INTERRUTTORE LINEA BRUCIATORE	BURNER LINE SWITCH
IM	INTERRUTTORE LINEA MOTORE VENTILATORE	FAN MOTOR LINE SWITCH
KAB	RELE' AUSILARIO	AUXILIARY RELAY
LAF	LAMPADA SEGNALAZIONE ALTA FIAMMA BRUCIATORE	BURNER IN HIGH FLAME INDICATOR LIGHT
LB	LAMPADA SEGNALAZIONE BLOCCO BRUCIATORE	INDICATOR LIGHT FOR BURNER LOCK-OUT
LBF	LAMPADA SEGNALAZIONE BASSA FIAMMA BRUCIATORE	BURNER IN LOW FLAME INDICATOR LIGHT
ST	SERIE TERMOSTATI/PRESSOSTATI	SERIES OF THERMOSTATS OR PRESSURE SWITCHES
TAB	TERMOSTATO/PRESSOSTATO ALTA-BASSA FIAMMA	HIGH-LOW THERMOSTAT/PRESSURE SWITCHES
TS	TERMOSTATO/PRESSOSTATO DI SICUREZZA	SAFETY THERMOSTAT OR PRESSURE SWITCH

SIGLA/ITEM	FUNZIONE	FUNCTION
C1	CONTAORE BASSA FIAMMA	СЧЕТЧИК ЧАСОВ РАБОТЫ НА МАЛОМ ПЛАМЕНИ
C2	CONTAORE ALTA FIAMMA	СЧЕТЧИК ЧАСОВ РАБОТЫ НА БОЛЬШОМ ПЛАМЕНИ
FU1	FUSIBILE LINEA MOTORE VENTILATORE	ПЛАВКИЙ ПРЕДОХРАНИТЕЛЬ ЛИНИИ ДВИГАТЕЛЯ ВЕНТИЛЯТОРА
FU3	FUSIBILE LINEA BRUCIATORE	ПЛАВКИЙ ПРЕДОХРАНИТЕЛЬ ЛИНИИ ГОРЕЛКИ
IL	INTERRUTTORE LINEA BRUCIATORE	ВЫКЛЮЧАТЕЛЬ ЛИНИИ ГОРЕЛКИ
IM	INTERRUTTORE LINEA MOTORE VENTILATORE	ВЫКЛЮЧАТЕЛЬ ЛИНИИ ДВИГАТЕЛЯ ВЕНТИЛЯТОРА
KAB	RELE' AUSILIARIO	ВСПОМОГАТЕЛЬНОЕ РЕЛЕ
LAF	LAMPADA SEGNALAZIONE ALTA FIAMMA BRUCIATORE	СИГНАЛЬНАЯ ЛАМПОЧКА БОЛЬШОГО ПЛАМЕНИ ГОРЕЛКИ
LB	LAMPADA SEGNALAZIONE BLOCCO BRUCIATORE	СИГНАЛЬНАЯ ЛАМПОЧКА БЛОКИРОВКИ ГОРЕЛКИ
LBF	LAMPADA SEGNALAZIONE BASSA FIAMMA BRUCIATORE	СИГНАЛЬНАЯ ЛАМПОЧКА МАЛОГО ПЛАМЕНИ ГОРЕЛКИ
ST	SERIE TERMOSTATI/PRESSOSTATI	РЯД ТЕРМОСТАТОВ/РЕЛЕ ДАВЛЕНИЯ
TAB	TERMOSTATO/PRESSOSTATO ALTA-BASSA FIAMMA	ТЕРМОСТАТ/РЕЛЕ ДАВЛЕНИЯ БОЛЬШОГО/МАЛОГО ПЛАМЕНИ
TS	TERMOSTATO/PRESSOSTATO DI SICUREZZA	ПРЕДОХРАНИТЕЛЬНЫЙ ТЕРМОСТАТ/ РЕЛЕ ДАВЛЕНИЯ

Data 26/06/2008		PREC. 1	FOGLIO 2
Revisione 00			
Dis. N. TAB_1		SEGUE /	TOTALE 1

CIB UNIGAS 600V

CONTROLLER

CE

USER'S MANUAL

COD. M12925CA Rel 1.2 08/2014

SOFTWARE VERSION **1.0x T73**
code **80379** / Edition **01** - **06/2012**

1 • INSTALLATION

• Dimensions and cut-out; panel mounting

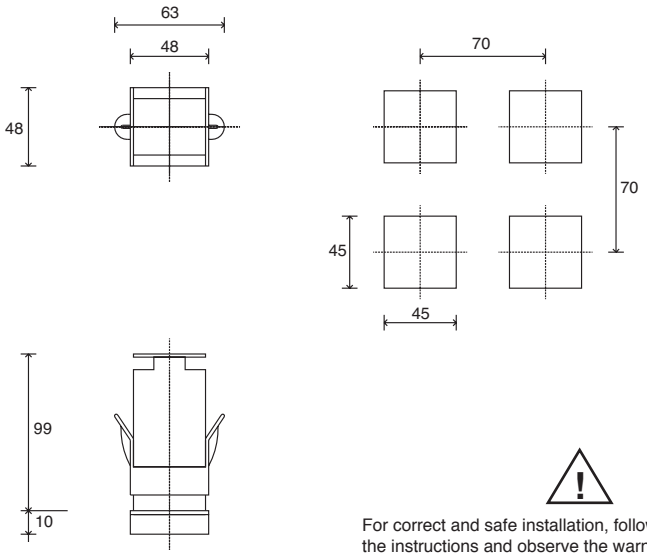

For correct and safe installation, follow the instructions and observe the warnings contained in this manual.

Panel mounting:

To fix the unit, insert the brackets provided into the seats on either side of the case.
To mount two or more units side by side, respect the cut-out dimensions shown in the drawing.

CE MARKING: The instrument conforms to the European Directives 2004/108/CE and 2006/95/CE with reference to the generic standards: **EN 61000-6-2** (immunity in industrial environment) **EN 61000-6-3** (emission in residential environment) **EN 61010-1** (safety).

MAINTENANCE: Repairs must be done only by trained and specialized personnel.
Cut power to the device before accessing internal parts.
Do not clean the case with hydrocarbon-based solvents (Petrol, Trichlorethylene, etc.). Use of these solvents can reduce the mechanical reliability of the device. Use a cloth dampened in ethyl alcohol or water to clean the external plastic case.

SERVICE: GEFRAN has a service department. The warranty excludes defects caused by any use not conforming to these instructions.

EMC conformity has been tested with the following connections

FUNCTION	CABLE TYPE	LENGTH
Power supply cable	1 mm²	1 m
Relay output cable	1 mm²	3,5 m
TC input	0,8 mm² compensated	5 m
Pt100 input	1 mm²	3 m

2 • TECHNICAL SPECIFICATIONS

Display	2x4 digit green, high display 10 and 7mm
Keys	4 of mechanical type (Man/Aut, INC, DEC, F)
Accuracy	0.2% f.s. ±1 digit ambient temperature 25°C
Main input (settable digital filter)	TC, RTD, PTC, NTC 60mV,1V Ri≥1MΩ; 5V,10V Ri≥10KΩ; 20mA Ri=50Ω Tempo di campionamento 120 msec.
Type TC Thermocouples (ITS90)	Type TC Thermocouples : J,K,R,S,T (IEC 584-1, CEI EN 60584-1, 60584-2) ; custom linearization is available / types B,E,N,L GOST,U,G,D,C are available by using the custom linearization.
Cold junction error	0,1° / °C
RTD type (scale configurable within indicated range, with or without decimal point) (ITS90) *Max line resistance for RTD*	DIN 43760 (Pt100), JPT100 20Ω
PTC type / NTC Type	990Ω, 25°C / 1KΩ, 25°C
Safety	detection of short-circuit or opening of probes, LBA alarm
°C / °F selection	configurable from faceplate
Linear scale ranges	-1999 to 9999 with configurable decimal point position
Controls	PID, Self-tuning, on-off
pb - dt - it	0,0...999,9 % - 0,00...99,99 min - 0,00...99,99 min
Action	Heat / Cool
Control outputs	on / off
Maximum power limit heat / cool	0,0...100,0 %
Cycle time	0...200 sec
Main output type	relay, logic, continuous (0...10V Rload ≥ 250KΩ, 0/4...20mA Rload ≤ 500Ω)
Softstart	0,0...500,0 min
Fault power setting	-100,0...100,0 %
Automatic blanking	Displays PV value, optional exclusion
Configurable alarms	Up to 3 alarm functions assignable to an output, configurable as: maximum, minimum, symmetrical, absolute/deviation, LBA
Alarm masking	- exclusion during warm up - latching reset from faceplate or external contact
Type of relay contact	NO (NC), 5A, 250V/30Vdc cosφ=1
Logic output for static relays	24V ±10% (10V min at 20mA)
Transmitter power supply	15/24Vdc, max 30mA short-circuit protection
Power supply (switching type)	(std) 100 ... 240Vac ±10% (opt.) 11...27Vac/dc ±10%; 50/60Hz, 8VA max
Faceplate protection	IP65
Working / Storage temperature range	0...50°C / -20...70°C
Relative humidity	20 ... 85% non-condensing
Environmental conditions of use	for internal use only, altitude up to 2000m
Installation	Panel, plug-in from front
Weight	160g for the complete version

3 • DESCRIPTION OF FACEPLATE

Function indicators
Indicates modes of operation

L1 MAN/AUTO = OFF (automatic control)
ON (manual control)

L2 PRE-HEATING = ON (running)

L3 SELFTUNING = ON (enabled Self)
OFF (disabled Self)

Automatic/Manual adjustment selection
Active only when PV display visualises the process variable (button pressed for at least 5 sec.)

Indication of output states
OUT 1 (AL1); OUT 2 (OPEN); OUT 3 (CLOSED)

PV Display: Indication of process variable
Error Indication: LO, HI, Sbr, Err
LO= the value of process variable is < di LO_S
HI= the value of process variable is > di HI_S
Sbr= faulty sensor or input values higher than max. limits
Err= PT100 third wire opened for PT100, PTC or input values lower than min. limits (i.e.: TC wrong connection)

SV display: Indication of setpoint

Function key
Gives access to the various configuration phases •• Confirms change of set parameters and browses next or previous parameter (if Auto/Man key is pressed)

"Inc" and "Dec" key
Press to increment (decrement) any numerical parameter •• Increment (decrement) speed is proportional to time key stays pressed •• The operation is not cyclic: once the maximum (minimum) value of a field is reached, the value will not change even if the key remains pressed.

4 • CONNECTIONS

• Outputs

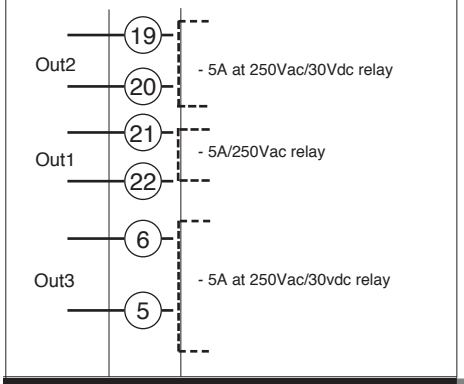

TOP

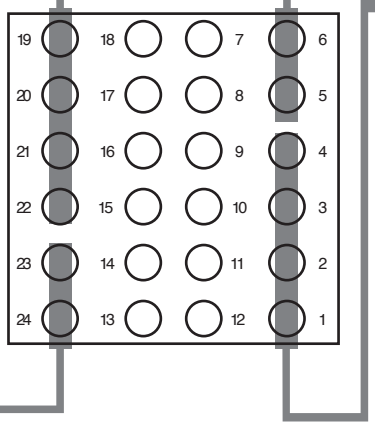

• Power Supply

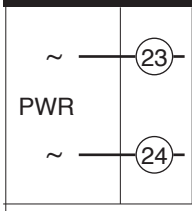

Standard:
100...240Vac ± 10%

Optional:
11...27Vac/Vdc ± 10%

Max. power 8VA; 50/60 Hz

• Inputs

• TC Input

Available thermocouples:
J, K, R, S, T
(B, E, N, L, U, G, D, C custom linearization is available)
- Observe polarities
- For extensions, use the correct compensating cable for the type of TC used

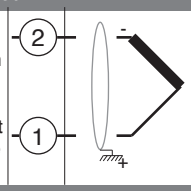

• Linear input with 3-wire transmitter

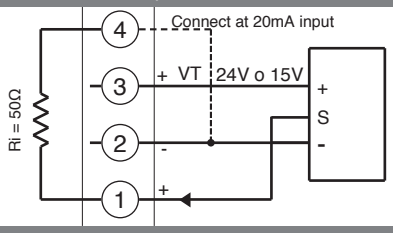

• Linear input (I)

Linear input in dc current

20mA, Ri = 50Ω

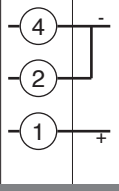

• Input 1 linear with transmitter 2 wires

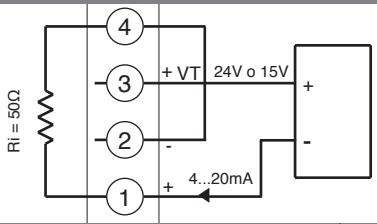

• Linear input (V)

Linear input in dc voltage
60mV, 1V
Ri > 1MΩ
5V, 10V
Ri > 10KΩ

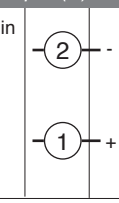

• Pt100 / PTC / NTC

Use wires of adequate diameter (min. 1mm²)
PT100, JPT100, PTC, NTC

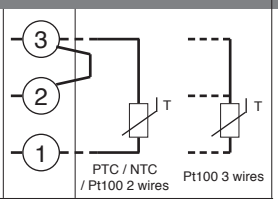

• Identification of boards

Power board - Solder side

Select transmitter voltage

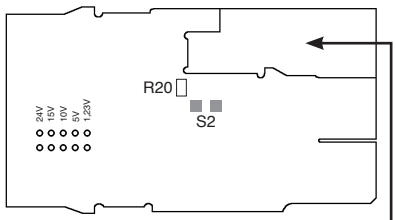

N.B. : you can keep the **OUT1** relay energized at power-up by inserting jumper **S2** and removing resistance **R20**.

CPU board - Component side

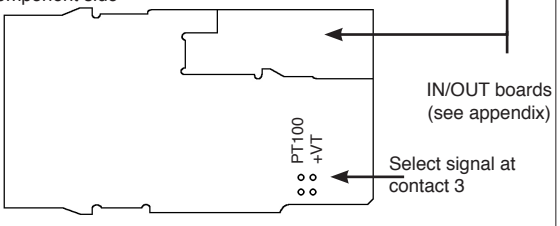

IN/OUT boards (see appendix)

Select signal at contact 3

• Device structure

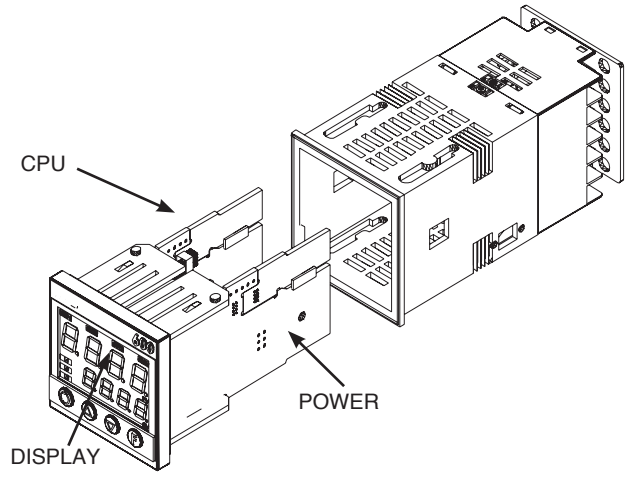

5 • "EASY" PROGRAMMING and CONFIGURATION

THE EASY CONFIGURATION (Pro=0...12) IS SUITABLE FOR VERSIONS WITH AL1/OPEN/CLOSED

S4 Jumper (CPU) ON

LEVEL 1 MENU

P.V. / S.V.	P.V. / S.V. Process variable (PV display) Work Setpoint (SV display) or control output value with controller in manual
_SP	Local Setpoint (scale points Lo.L...Hi.L)
HY.P	Positive hysteresis alarm 1 (0 ... +999 scale points)
HY.n	Negative hysteresis alarm 1 (0 ... -999 scale points)

PAS — Password

PAS = 99

Pro — Protection code

• Prot

12 — *Pro* — Protection code

Prot	Display	Modification
0	SP, Hy.P, Hy.n	SP, Hy.P , Hy.n
1	SP, Hy.P, Hy.n	SP
2	SP	

+ 4 to disable InP, Out
+ 8 to disable CFG

6 • PROGRAMMING and CONFIGURATION

LEVEL 1 MENU

	P.V. / S.V.	P.V. / S.V. Process variable (PV display) Work Setpoint (SV display) or control output value with controller in manual
80.0	_SP	Local Setpoint (Lo.L ... Hi.L)
+5.0	HY.P	Positive hysteresis alarm 1 (0 ... +999 scale points)
-5.0	HY.n	Negative hysteresis alarm 1 (0 ... +999 scale points)
	P.oS	Valve position indication (0.0 ... 100.0 %) (*)
	Ou.P	Control output value (*)

(*) The automatic return *PV/SV* display is disabled for these displays

If Inc, Dec, F keys are not pressed within 15 sec, display returns automatically to P.V. value.

INF — Information display

NO — S4 Jumper (CPU) = ON

CFG — Custom menu

InP — Input settings

Out — Output settings

PAS — Password

NO — PAS = 99

Pro — Protection code

Hrd — Hardware configuration

Lin — Input linearization

U.CA — User calibration

Keep the F key pressed to scroll the menus

Release the F key to select the displayed menu

Press the F key to access the parameters

Keep the F key pressed to exit any menu

Keep F + Auto/Man keys pressed for 2 sec. on any menu to go immediately to level 1 display

Pressing the Auto/Man + F keys on any menu immediately returns you to the previous parameter.

N.B.: Once a particular configuration is entered, all unnecessary parameters are no longer displayed

• InFo Display

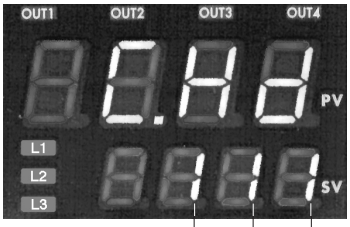

OUTPUT 2	OUTPUT 3	SERIAL COMMUNICATION
0 = None 1 = Relay	0 = None 1 = Relay	0 = None

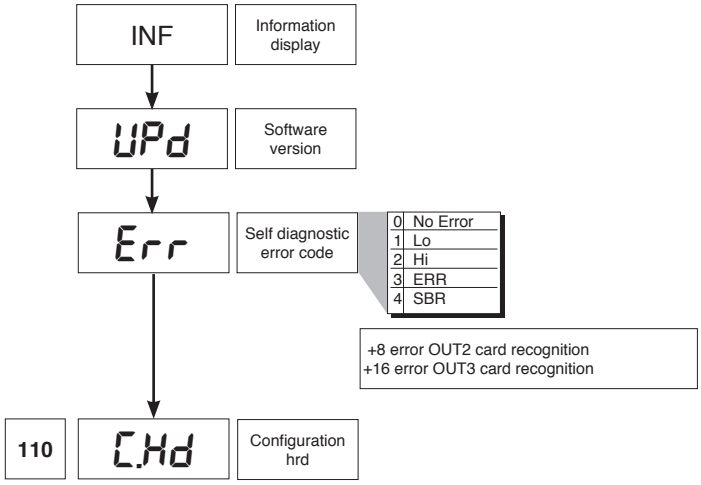

• CFG

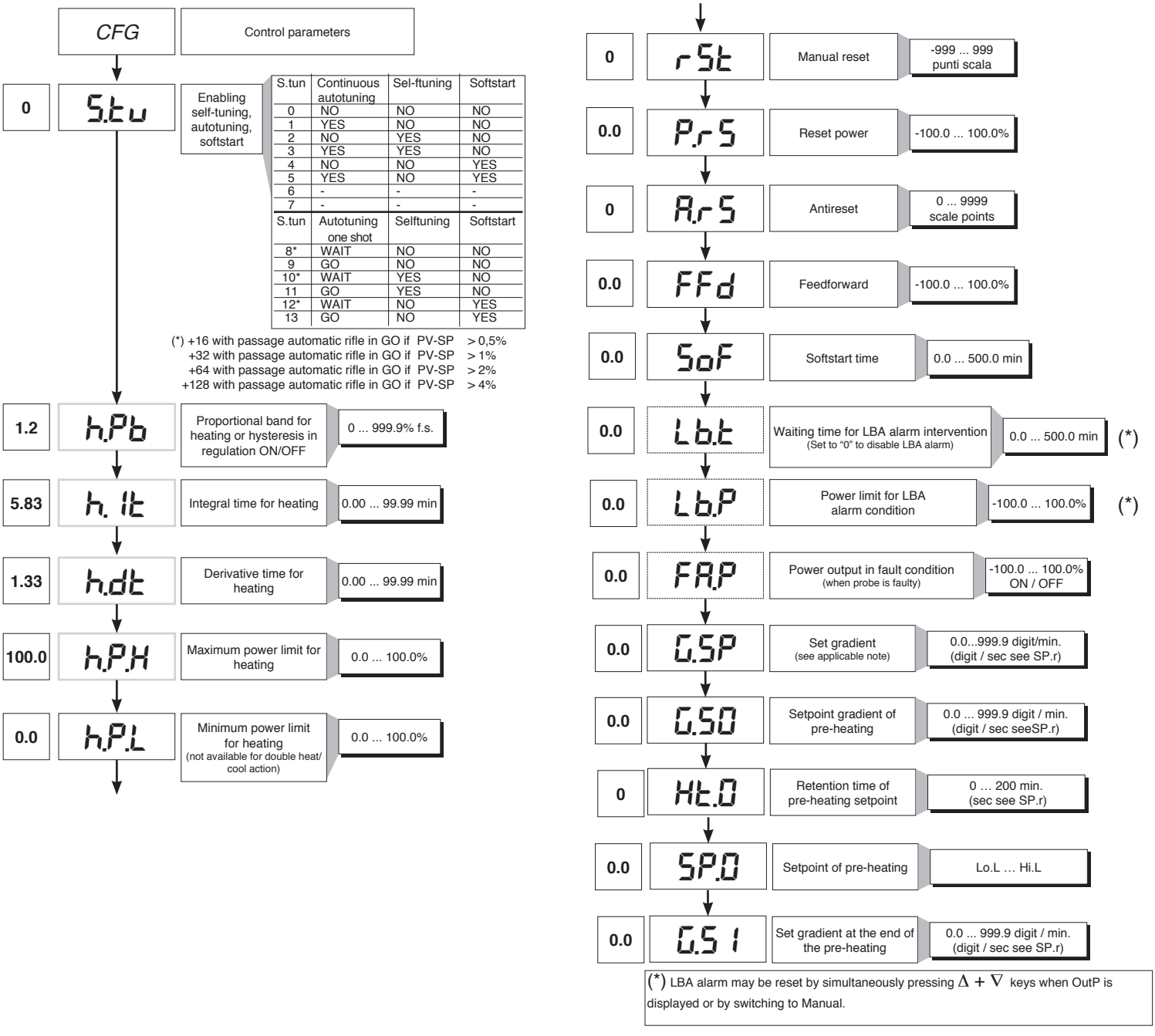

• InP

InP — Input settings

0 — SP.r — Def. remote setpoint — 0 default (remote setpoint present)

+2 Times of pre-heating and gradients of set digit/sec

30 — tYP. — Probe type, signal, enable custom linearization, and main input scale

Type	Probe type	without decimal point	with decimal point
	Sensore:	TC	
0	TC J °C	0/1000	0.0/999.9
1	TC J °F	32/1832	32.0/999.9
2	TC K °C	0/1300	0.0/999.9
3	TC K °F	32/2372	32.0/999.9
4	TC R °C	0/1750	0.0/999.9
5	TC R °F	32/3182	32.0/999.9
6	TC S °C	0/1750	0.0/999.9
7	TC S ° F	32/3182	32.0/999.9
8	TC T °C	-200/400	-199.9/400.0
9	TC T °F	-328/752	-199.9/752.0
28	TC	CUSTOM	CUSTOM
29	TC	CUSTOM	CUSTOM
30	PT100 °C	-200/850	-199.9/850.0
31	PT100 °F	-328/156 2	-199.9/999.9
32	JPT100 °C	-200/600	-199.9/600.0
33	JPT100 °F	-328/1112	-199.9/999.9
34	PTC °C	-55/120	-55.0/120.0
35	PTC °F	-67/248	-67.0/248.0
36	NTC °C	-10/70	-10.0/70.0
37	NTC °F	14/158	14.0/158.0
38	0...60 mV	-1999/9999	-199.9/999.9
39	0...60 mV	Custom scale	Custom scale
40	12...60 mV	-1999/9999	-199.9/999.9
41	12...60 mV	Custom scale	Custom scale
42	0...20 mA	-1999/9999	-199.9/999.9
43	0...20 mA	Custom scale	Custom scale
44	4...20 mA	-1999/9999	-199.9/999.9
45	4...20 mA	Custom scale	Custom scale
46	0...10 V	-1999/9999	-199.9/999.9
47	0...10 V	Custom scale	Custom scale
48	2...10 V	-1999/9999	-199.9/999.9
49	2...10 V	Custom scale	Custom scale
50	0...5 V	-1999/9999	-199.9/999.9
51	0...5 V	Custom scale	Custom scale
52	1...5 V	-1999/9999	-199.9/999.9
53	1...5 V	Custom scale	Custom scale
54	0...1 V	-1999/9999	-199.9/999.9
55	0...1 V	Custom scale	Custom scale
56	200mv..1V	-1999/9999	-199.9/999.9
57	200mv..1V	Custom scale	Custom scale
58	Cust10 V-20mA	-1999/9999	-199.9/999.9
59	Cust10 V-20mA	Custom scale	Custom scale
60	Cust 60mV	-1999/9999	-199.9/999.9
61	Cust 60mV	Custom scale	Custom scale
62	PT100-JPT	CUSTOM	CUSTOM
63	PTC	CUSTOM	CUSTOM
64	NTC	CUSTOM	CUSTOM

For custom linearization:
- LO signal is generated with variable below Lo.S or at minimum calibration value
- HI signal is generated with variable above Lo.S or at maximum calibration value

Max. non-linearity error for thermocouples (TC), resistors (PT100) and thermistors (PTC, NTC).

The error is calculated as deviation from theoretical value and is expressed as percentage of full scale (in °C).

S, R range 0...1750°C; error < 0.2% f.s. (t > 300°C) / for other range; error < 0.5% f.s.
T error < 0.2% f.s. (t > -150°C)
B range 44...1800°C; error < 0.5% f.s. (t > 300°C) / range 44,0...999,9; error < 1% f.s. (t > 300°C)
U range -99,9...99,9 and -99...99°C; error < 0.5% f.s. / for other range; error < 0.2% f.s. (t > -150°C)
G error < 0.2% f.s. (t > 300°C)
D error < 0.2% f.s. (t > 200°C)
C range 0...2300; error < 0.2% f.s. / for other range; error < 0.5% f.s.

NTC error < 0.5% f.s.

Tc: **J, K, E, N, L** error < 0,2% f.s.
JPT100 and **PTC** error < 0,2% f.s.
PT100 scale -200...850°C
Precision better than 0,2% f.s. at 25°C
In range 0...50°C:
- Precision better than 0,2% f.s. in range -200...400°C
- Precision better than 0,4% f.s. in range +400...850°C

(where f.s. refers to range -200... +850°C)

0.1 — FLt — Digital filter on input (if = 0 excludes averaging filter on sample value) — 0.0 ... 20.0 sec

0.5 — FLd — Digital filter on input display — 0 ... 9.9 scale points

1 — dP.S — Decimal point position for input scale

dP_S	Format
0	xxxx
1	xxx.x
2	xx.xx (*)
3	x.xxx (*)

(*) not available for TC, RTD, PTC and NTC scales

0.0 — Lo.S — Minimum limit of main input scale — min...max input range selected in tyP

850.0 — Hi.S — Maximum limit of main input scale — min...max input range selected in tyP

0 — oFS. — Offset correction of main input — -999 ... 999 scale points

30.0 — LoL — Lower limit for setting SP and absolute alarms — Lo.S ... Hi.S

130.0 — HiL — Upper limit for setting SP and absolute alarms — Lo.S ... Hi.S

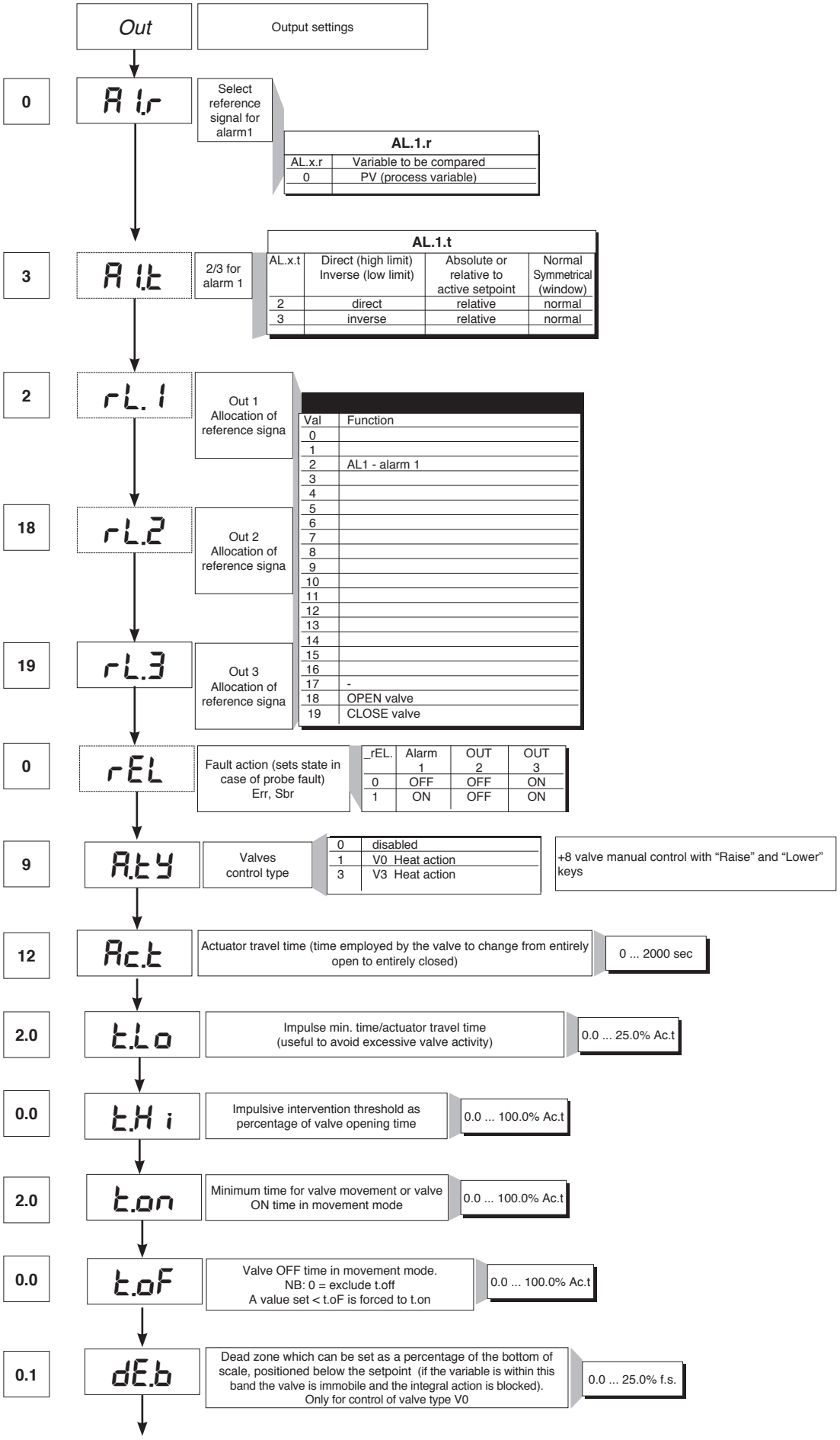
Out
Output settings
0
A 1.r
Select reference signal for alarm1
AL.1.r
AL.x.r
Variable to be compared
0
PV (process variable)
3
A 1.t
2/3 for alarm 1
AL.1.t
AL.x.t
Direct (high limit) Inverse (low limit)
Absolute or relative to active setpoint
Normal Symmetrical (window)
2
direct
relative
normal
3
inverse
relative
normal
2
rL. 1
Out 1 Allocation of reference signa
18
rL.2
Out 2 Allocation of reference signa
19
rL.3
Out 3 Allocation of reference signa
Val
Function
0
1
2
AL1 - alarm 1
3
4
5
6
7
8
9
10
11
12
13
14
15
16
17
-
18
OPEN valve
19
CLOSE valve
0
rEL
Fault action (sets state in case of probe fault) Err, Sbr
_rEL.
Alarm 1
OUT 2
OUT 3
0
OFF
OFF
ON
1
ON
OFF
ON
9
A.tY
Valves control type
0
disabled
1
V0 Heat action
3
V3 Heat action
+8 valve manual control with “Raise” and “Lower” keys
12
Ac.t
Actuator travel time (time employed by the valve to change from entirely open to entirely closed)
0 ... 2000 sec
2.0
t.Lo
Impulse min. time/actuator travel time (useful to avoid excessive valve activity)
0.0 ... 25.0% Ac.t
0.0
t.Hi
Impulsive intervention threshold as percentage of valve opening time
0.0 ... 100.0% Ac.t
2.0
t.on
Minimum time for valve movement or valve ON time in movement mode
0.0 ... 100.0% Ac.t
0.0
t.oF
Valve OFF time in movement mode.
NB: 0 = exclude t.off
A value set < t.oF is forced to t.on
0.0 ... 100.0% Ac.t
0.1
dE.b
Dead zone which can be set as a percentage of the bottom of scale, positioned below the setpoint (if the variable is within this band the valve is immobile and the integral action is blocked).
Only for control of valve type V0
0.0 ... 25.0% f.s.

• Prot

12 — *Pro* — Protection code

Prot	Display	Modification
0	SP, Hy.P, Hy.n, AL.2, AL.3, PoS, OuP, INF	SP, Hy.P , Hy.n, AL.2, AL.3, PoS
1	SP, Hy.P, Hy.n, AL.2, AL.3, PoS, OuP, INF	SP
2	SP, OuP, INF	

+ 4 to disable InP, Out
+ 8 to disable CFG
+ 16 to disable SW “power-up - power down”
+ 32 disable manual power latching
+ 64 to disable manual power modification
+128 enables full configuration

Note: OuP and INF only display configuration extended

• Hrd

Hrd — Hardware configuration

0 — *hd.1* — Enable multiset instrument control by serial

6 — *Ctr* — Control type

Val	Control type
0	P heat
1	
2	
3	PI heat
4	
5	
6	PID heat
7	
8	
9	ON-OFF heat
10	
11	
12	
13	
14	

Selection of derivative action sampling time:
+ 0 sample 1 sec.
+ 16 sample 4 sec.
+ 32 sample 8 sec.
+ 64 sample 240 msec.

Note: LbA alarm is not enabled with ON/OFF type control

1 — *AL.n* — Select number of enabled alarms

AL.nr	Alarme1	Alarm 2	Alarm 3
1	enabled	disabled	disabled

1 — *but.* — Function of M/A keys

butt	
0	No function (key disenabled))
1	MAN / AUTO controller
2	
3	HOLD
4	
5	
6	Start/Stop selftuning
7	Start/Stop autotuning
8	

+ 16 disables the “back menu” function (Auto/Man + F keys) in the configuration menus

0 — *dSP* — Defining SV display function

diSP	Lower display (SV) function
0	SSP - setpoint enabled
1	PoS - valve position
2	Control output value
3	Deviation (SSP - PV)

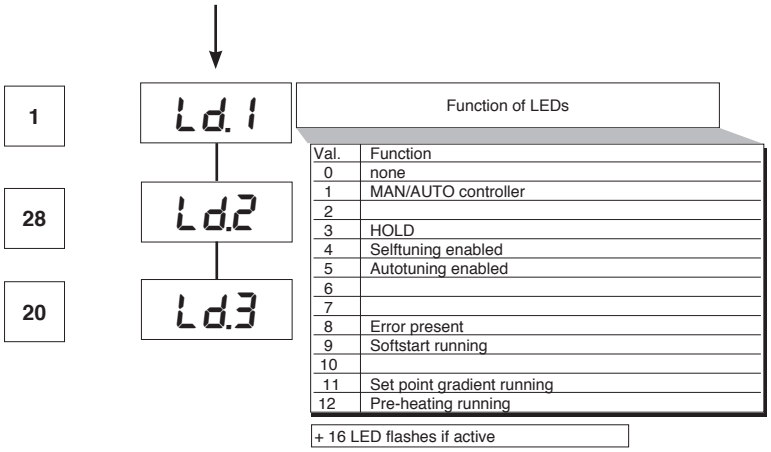

Val.	Function
0	none
1	MAN/AUTO controller
2	
3	HOLD
4	Selftuning enabled
5	Autotuning enabled
6	
7	
8	Error present
9	Softstart running
10	
11	Set point gradient running
12	Pre-heating running

+ 16 LED flashes if active

• Lin

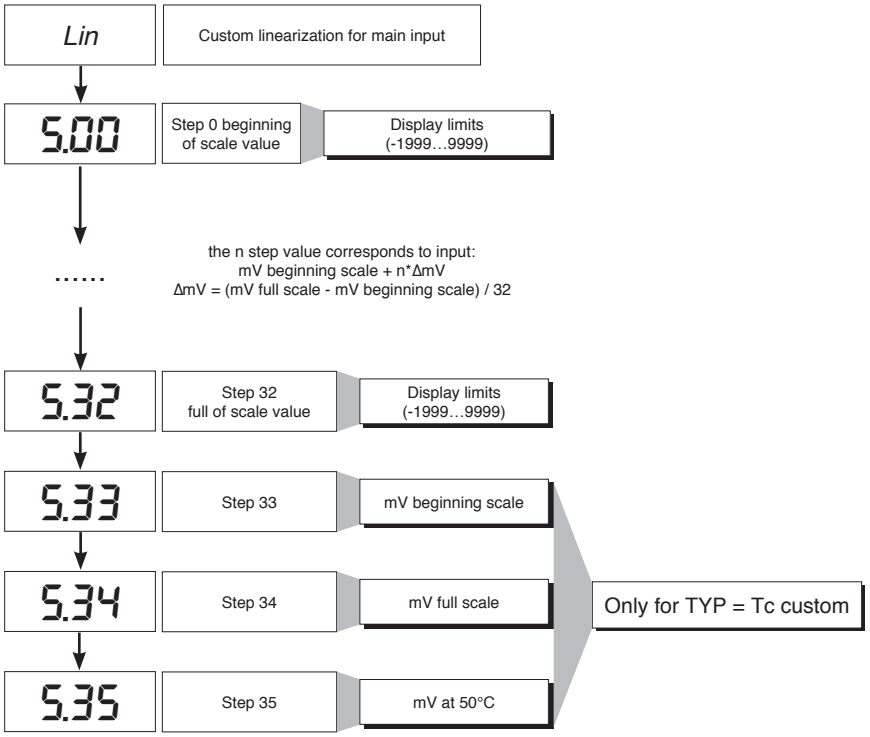

• U.CAL

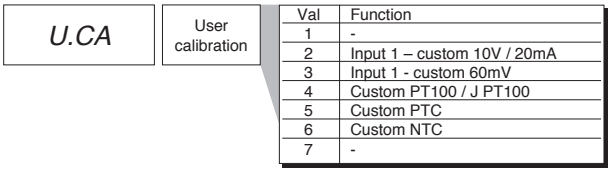

Val	Function
1	-
2	Input 1 – custom 10V / 20mA
3	Input 1 - custom 60mV
4	Custom PT100 / J PT100
5	Custom PTC
6	Custom NTC
7	-

7 • CONSENT FOR BURNER AL1

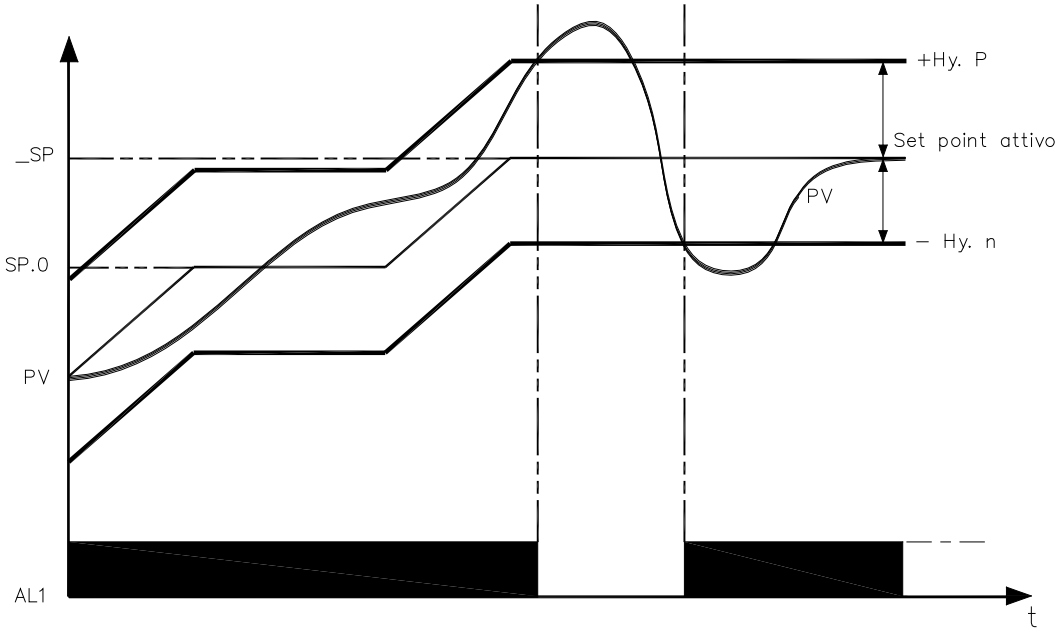

Obtain burner consent by configuring alarm 1 as inverse deviation with positive hysteresis Hy.P and negative hysteresis Hy.n

8 • PRE-HEATING FUNCTION

Enable the pre-heating function by setting parameters GS.0, Ht.0, GS.1 other than zero.
It consists of three phases that are activated sequentially at firing:

- **Ramp 0 phase**
  Enabled by setting GS.0 > 0. Starting from setpoint = PV (initial state), it reaches pre-heating set SP.0 with gradient GS.0
- **Maintenance phase**
  Enabled by setting Ht.0 > 0. Maintains pre-heating setpoint SP.0 for time Ht.0
- **Ramp 1 phase**
  Enabled by setting GS.1 > 0. Starting from pre-heating setpoint SP.0, it reaches active _SP set with gradient GS.1

In case of selftuning, the pre-heating function is not activated

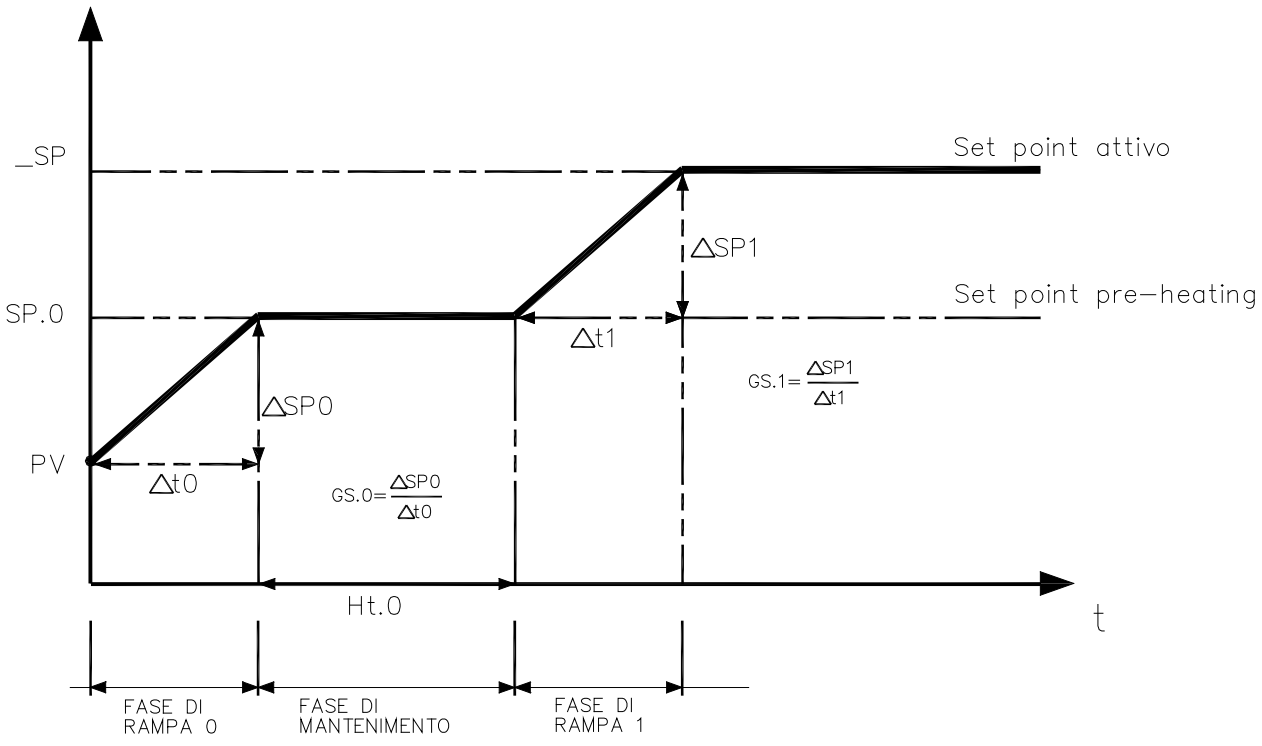

9 • ADJUSTMENT WITH MOTORIZED VALVE

In an adjustment process the adjustment valve has the function of varying fuel delivery (frequently corresponding to the thermal energy introduced into the process) in relation to the signal coming from the controller.
For this purpose it is provided with an actuator able to modify its opening value, overcoming the resistances produced by the fluid passing inside it.
The adjustment valves vary the delivery in a modulated manner, producing finite variations in the fluid passage inner area corresponding to finite variations of the actuator input signal, coming from the controller. The servomechanism, for example, comprises an electric motor, a reducer and a mechanical transmission system which actions the valve.
Various auxiliary components can be present such as the mechanical and electrical safety end travels, manual actioning systems.

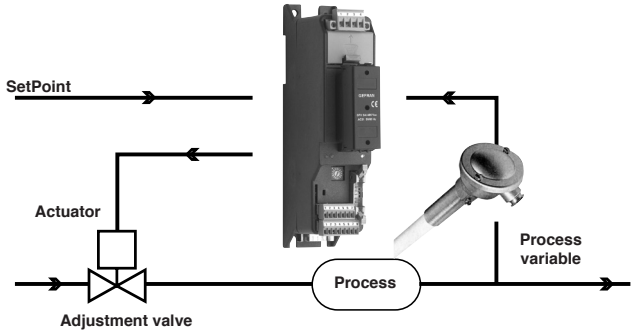

CONTROL EXAMPLE FOR V0 VALVE

The controller determines, on the basis of the dynamics of the process, the control output for the valve corresponding to the opening of the same in such a way so as to maintain the desired value of the process variable.

Characteristic parameters for valves control

- Actuator time (Ac.t) is the time employed by the valve to pass from entirely open to entirely closed (or vice-versa), and can be set with a resolution of one second. It is a mechanical feature of the valve+actuator unit.
NOTE: if the actuator's travel is mechanically limited it is necessary to proportionally reduce the Ac.t value.

- Minimum impulse (t.Lo) expressed as a % of the actuator time (resolution 0.1%).
Represents the minimum change in position corresponding to a minimum change in power supplied by the instrument below which the actuator will not physically respond to the command.
This represents the minimum variation in position due to which the actuator does not physically respond to the command.
The minimum duration of the movement can be set in t.Lo, expressed as a % of actuator time.
- Impulsive intervention threshold (t.Hi) expressed as a % of the actuator time (resolution 0.1%) represents the position displacement (requested position – real position) due to which the manoeuvre request becomes impulsive.

You can choose between 2 types of control:
1) ON time of movement = t.on and OFF time proportional to shift and greater than or equal to t.Lo (we recommend setting t.on = t.Lo) (set t.oF = 0).
2) ON time of movement = t.on and OFF time = t.oF. A value set for t.oF < t.on is forced to t.on. To activate this type, set t.oF < > 0.
The type of movement approach allows fine control of the reverse drive valve (from potentiometer or not), especially useful in cases of high mechanical inertia.
Set t.Hi = 0 to exclude modulation in positioning.
This type of modulated approach allows precise control of the feedback actioned valve, by a potentiometer or not, and is especially useful in cases of high mechanical inertia. Setting t.Hi = 0 excludes modulation in positioning.

- Dead zone(dE.b) is a displacement band between the adjustment setpoint and the process variable within which the controller does not supply any command to the valve (Open = OFF; Close = OFF). It is expressed as a percentage of the bottom scale and is positioned below the setpoint.
The dead zone is useful in an operative process to avoid straining the actuator with repeated commands and an insignificant effect on the adjustment. Setting dE.b = 0 the dead zone is excluded.

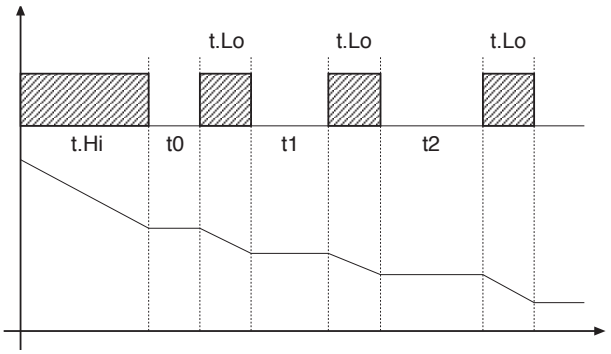

Graph of behavior inside the band with integral time ≠ 0.

With integral time = 0, movement ON time is always equal to OFF time.

t0 = t.Lo

Valve control modes

With the controller in manual, the setting of parameter At.y ≥ 8 allows direct control of the valve open and close commands through the keyboard Increments and Decrements on the front seats.

V0 - for floating valve without potentiometer

Model V0 have similar behaviour: every manoeuvre request greater than the minimum impulse t.Lo is sent to the actuator by means of the OPEN/CLOSE relays; every action updates the presumed position of the virtual potentiometer calculated on the basis of the actuator travel declared time.
In this way there is always a presumed position of the valve which is compared with the position request of the controller.
Having reached a presumed extreme position (entirely open or entirely closed determined by the “virtual potentiometer”) the controller provides a command in the same direction, in this way ensuring the real extreme position is reached (minimum command time = t.on).
The actuators are usually protected against the OPEN command in the entirely open position or CLOSE command in the entirely closed position.

V3 - for floating valve, PI control

When the difference between the position calculated by the controller and the only proportional component exceeds the value corresponding to the minimum impulse t.Lo the controller provides an OPEN or CLOSE command of the duration of the minimum impulse itself t.Lo.
At each delivery the integral component of the command is set to zero (discharge of the integral).
The frequency and duration of the impulses is correlated to the integral time (h.it or c.it).

Non-movement behavior
t.Hi = 0: with power = 100% or 0.0%, the corresponding open or close outputs always remain enabled (safety status).

Movement behavior
t.Hi < > 0: with position attained corresponding to 100% or 0.0%, the corresponding open or close outputs are switched off.

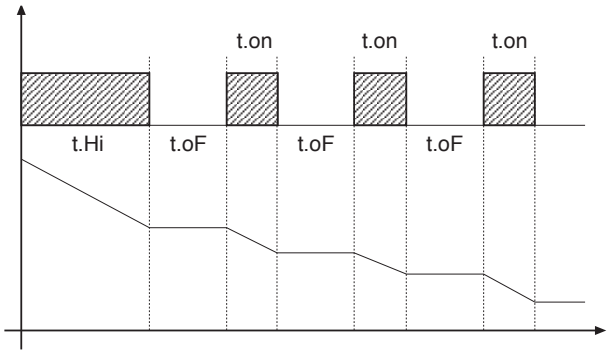

If t.oF = 0, current function is maintained.

If t.oF ≠ 0 movement mode will be as shown on the graph

10 • CONTROL ACTIONS

Proportional Action:
action in which contribution to output is proportional to deviation at input (deviation = difference between controlled variable and setpoint).
Derivative Action:
action in which contribution to output is proportional to rate of variation input deviation.
Integral Action:
action in which contribution to output is proportional to integral of time of input deviation.

Influence of Proportional, Derivative and Integral actions on response of process under control

* An increase in P.B. reduces oscillations but increases deviation.
* A reduction in P.B. reduces the deviation but provokes oscillations of the controlled variable (the system tends to be unstable if P.B. value is too low).
* An increase in Derivative Action corresponds to an increase in Derivative Time, reduces deviation and prevents oscillation up to a critical value of Derivative Time, beyond which deviation increases and prolonged oscillations occur.
* An increase in Integral Action corresponds to a reduction in Integral Time, and tends to eliminate deviation between the controlled variable and the setpoint when the system is running at rated speed.
If the Integral Time value is too long (Weak integral action), deviation between the controlled variable and the setpoint may persist.
Contact GEFRAN for more information on control actions.

11 • MANUAL TUNING

A) Enter the setpoint at its working value.
B) Set the proportional band at 0.1% (with on-off type setting).
C) Switch to automatic and observe the behavior of the variable. It will be similar to that in the figure:

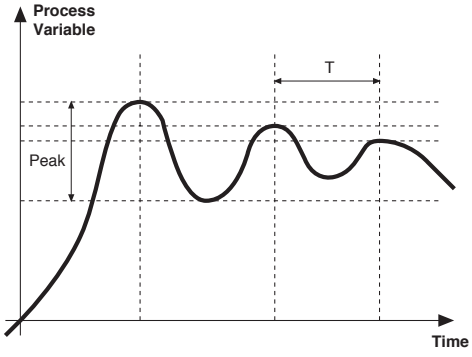

D) The PID parameters are calculated s follows: Proportional band

$$P.B.= \frac{Peak}{(V\ max - V\ min)} \times 100$$

(V max - V min) is the scale range.
Integral time: It = 1.5 x T
Derivative time: dt = It/4
E) Switch the unit to manual, set the calculated parameters. Return to PID action by setting the appropriate relay output cycle time, and switch back to Automatic.
F) If possible, to optimize parameters, change the setpoint and check temporary response. If an oscillation persists, increase the proportional band. If the response is too slow, reduce it.

12 • SET GRADIENT

SET GRADIENT: if set to ≠0, the setpoint is assumed equal to PV at power-on and auto/man switchover. With gradient set, it reaches the local setpoint. Every variation in setpoint is subject to a gradient.
The set gradient is inhibited at power-on when self-tuning is engaged.
If the set gradient is set to ≠0, it is active even with variations of the local setpoint.
The control setpoint reaches the set value at the speed defined by the gradient.

13 • SOFTWARE ON / OFF SWITCHING FUNCTION

How to switch the unit OFF: hold down the “F” and “Raise” keys simultaneously for 5 seconds to deactivate the unit, which will go to the OFF state while keeping the line supply connected and keeping the process value displayed. The SV display is OFF.
All outputs (alarms and controls) are OFF (logic level 0, relays de-energized) and all unit functions are disabled except the switch-on function and digital communication.
How to switch the unit ON: hold down the “F” key for 5 seconds and the unit will switch OFF to ON. If there is a power failure during the OFF state, the unit will remain in OFF state at the next power-up (ON/OFF state is memorized).
The function is normally enabled, but can be disabled by setting the parameter Prot = Prot +16.

14 • SELF-TUNING

The function works for single output systems (heating or cooling). The self-tuning action calculates optimum control parameter values during process startup. The variable (for example, temperature) must be that assumed at zero power (room temperature).
The controller supplies maximum power until an intermediate value between starting value and setpoint is reached, after which it zeros power.
PID parameters are calculated by measuring overshoot and the time needed to reach peak. When calculations are finished, the system disables automatically and the control proceeds until the setpoint is reached.

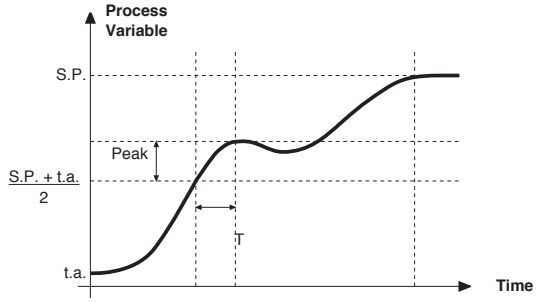

How to activate self-tuning:
A. Activation at power-on
1. Set the setpoint to the required value
2. Enable selftuning by setting the Stun parameter to 2 (CFG menu)
3. Turn off the instrument
4. Make sure the temperature is near room temperature
5. Turn on the instrument again

B. Activation from keyboard
1. Make sure that key M/A is enabled for Start/Stop selftuning (code but = 6 Hrd menu)
2. Bring the temperature near room temperature
3. Set the setpoint to the required value
4. Press key M/A to activate selftuning (Attention: selftuning interrupts if the key is pressed again)

The procedure runs automatically until finished, when the new PID parameters are stored: proportional band, integral and derivative times calculated for the active action (heating or cooling). In case of double action (heating or cooling), parameters for the opposite action are calculated by maintaining the initial ratio between parameters (ex.: CPb = HPb * K; where K = CPb / HPb when self-tuning starts). When finished, the Stun code is automatically cancelled.

Notes :
-The procedure does not start if the temperature is higher than the setpoint (heating control mode) or if the temperature is lower than the setpoint (cooling control mode). In this case , the Stu code is not cancelled.
-It is advisable to eneable one of the configurable LEDs to signal selftuning status.By setting one of parameters
LED1, LED2, LED3=4 or 20 on the Hrd menu, the respective LED will be on or flashing when selftuning is active.

15 • ACCESSORIES

• Interface for instrument configuration

KIT PC USB / RS485 o TTL

Kit for PC via the USB port (Windows environment) for GEFRAN instruments configuration:
Lets you read or write all of the parameters
• A single software for all models
• Easy and rapid configuration
• Saving and management of parameter recipes
• On-line trend and saving of historical data
Component Kit:
- Connection cable PC USB ... port TTL
- Connection cable PC USB ... RS485 port
- Serial line converter
- CD SW GF Express installation

• ORDERING CODE

GF_eXK-2-0-0	cod F049095

16 • ORDER CODE

600V [R] [R] [R] [-]

UTPUT 1	
Relay	R

UTPUT 2	
Relay	R

UTPUT 3	
Relay	R

POWER SUPPLY	
0	11...27Vac/dc
1	100...240Vac

• WARNINGS

WARNING: this symbol indicates danger. It is placed near the power supply circuit and near high-voltage relay contacts.

Read the following warnings before installing, connecting or using the device:

• follow instructions precisely when connecting the device.
• always use cables that are suitable for the voltage and current levels indicated in the technical specifications.
• the device has no ON/OFF switch: it switches on immediately when power is turned on. For safety reasons, devices permanently connected to the power supply require a two-phase disconnecting switch with proper marking. Such switch must be located near the device and must be easily reachable by the user. A single switch can control several units.
• if the device is connected to electrically NON-ISOLATED equipment (e.g. thermocouples), a grounding wire must be applied to assure that this connection is not made directly through the machine structure.
• if the device is used in applications where there is risk of injury to persons and/or damage to machines or materials, it MUST be used with auxiliary alarm units. You should be able to check the correct operation of such units during normal operation of the device.
• before using the device, the user must check that all device parameters are correctly set in order to avoid injury to persons and/or damage to property.
• the device must NOT be used in infiammable or explosive environments. It may be connected to units operating in such environments only by means of suitable interfaces in conformity to local safety regulations.
• the device contains components that are sensitive to static electrical discharges. Therefore, take appropriate precautions when handling electronic circuit boards in order to prevent permanent damage to these components.

***Installation*:** installation category II, pollution level 2, double isolation
The equipment is intended for permanent indoor installations within their own enclosure or panel mounted enclosing the rear housing and exposed terminals on the back.
• only for low power supply: supply from Class 2 or low voltage limited energy source
• power supply lines must be separated from device input and output lines; always check that the supply voltage matches the voltage indicated on the device label.
• install the instrumentation separately from the relays and power switching devices
• do not install high-power remote switches, contactors, relays, thyristor power units (particularly if “phase angle” type), motors, etc... in the same cabinet.
• avoid dust, humidity, corrosive gases and heat sources.
• do not close the ventilation holes; working temperature must be in the range of 0...50°C.
• surrounding air: 50°C
• use 60/75°C copper (Cu) conductor only, wire size range 2x No 22 - 14AWG, Solid/Stranded
• use terminal tightening torque 0.5N m
If the device has faston terminals, they must be protected and isolated; if the device has screw terminals, wires should be attached at least in pairs.
• *Power*: supplied from a disconnecting switch with fuse for the device section; path of wires from switch to devices should be as straight as possible; the same supply should not be used to power relays, contactors, solenoid valves, etc.; if the voltage waveform is strongly distorted by thyristor switching units or by electric motors, it is recommended that an isolation transformer be used only for the devices, connecting the screen to ground; it is important for the electrical system to have a good ground connection; voltage between neutral and ground must not exceed 1V and resistance must be less than 6Ohm; if the supply voltage is highly variable, use a voltage stabilizer for the device; use line filters in the vicinity of high frequency generators or arc welders; power supply lines must be separated from device input and output lines; always check that the supply voltage matches the voltage indicated on the device label.
• *Input and output connections*: external connected circuits must have double insulation; to connect analog inputs (TC, RTD) you have to: physically separate input wiring from power supply wiring, from output wiring, and from power connections; use twisted and screened cables, with screen connected to ground at only one point; to connect adjustment and alarm outputs (contactors, solenoid valves, motors, fans, etc.), install RC groups (resistor and capacitor in series) in parallel with inductive loads that work in AC *(Note: all capacitors must conform to VDE standards (class x2) and support at least 220 VAC. Resistors must be at least 2W)*; fit a 1N4007 diode in parallel with the coil of inductive loads that operate in DC.

GEFRAN spa will not be held liable for any injury to persons and/or damage to property deriving from tampering, from any incorrect or erroneous use, or from any use not conforming to the device specifications.

Set-up for 600V RRR0-1-T73 regulator

Set up for temperature probe Pt100 (ex Siemens QAE2120 130°C max.)

The regulator comes out of the factory preset with the corresponding values of the Siemens RWF40.000 and RWF50.2x

Verify wiring of the sensor

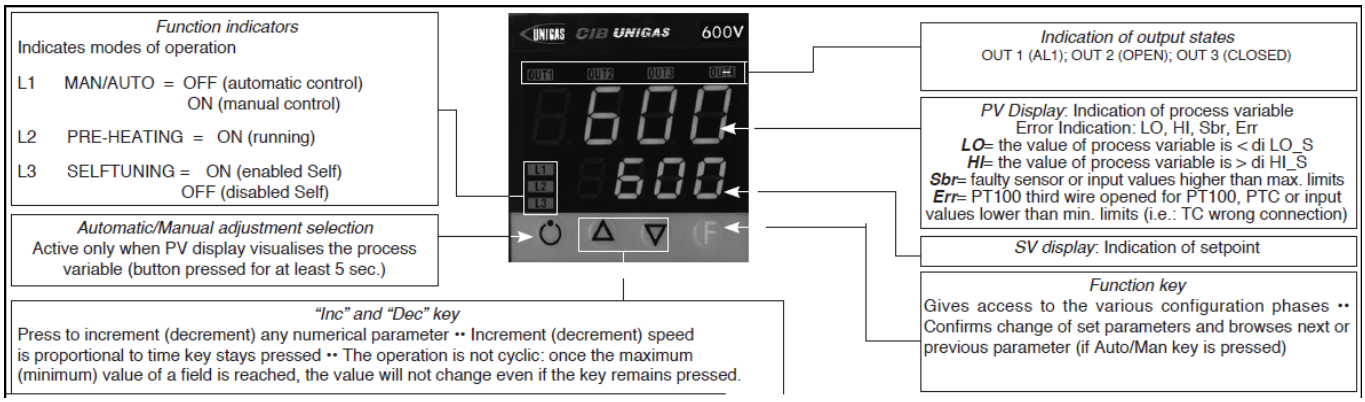

Regulation of the set-point **= 80**
It can be modified by using arrows "up" and "down".
By pushing **F** you go to parameters:

Hy.P	5 (hysteresis positive for output 1, terminals 21-22 (ex Q13-Q14)
Hy.n	-5 hysteresis negative for output ,1 terminals 21-22 (ex Q13-Q14)

Keep pushing **F** until you see **PASS**, release **F** and through the arrows set **99**, push **F** and visualize **Pro** (protection code) default is **12**, through the arrows set **128** and push **F,** keep it pushed until all parameters **InF**, **CFG**, **InP**, **Out**, **PASS** are visualized.

CFG	
S.tun	0
hPb	1,2
hIt	5,83
hdt	1,33
…	

InP	
….	
tyP	30 (Pt100)
…	
dP_S	1 (decimals num.)
Lo.S	0 (min. sensor scale)
Hi.S	850,0 (max sensor scale)
oFS	0 (offset of input correction)
Lo.L	30,0 (lower set-point range limit)
Hi.L	130,0 (upper set-point range limit)

Out	
A1.r	0
…	
A1.t	3 (operating mode AL1 =inverse-relative-normal)
…	
rL.1	2 (AL1)
rL.2	18 (open)
rL.3	19 (close)
rEL	0
A.ty	9 (type of servocontrol command)
Ac.t	12 (servocontrol running time: SQN72.4…/STA12..=12; SQM40.265=30)
t_Lo	2
t_Hi	0.0
t.on	2
t.oF	0.0
dE.b	0,1 (dead zone in % of end scale)

PAS	99 then push and keep pushed **F** until visualization of **Hrd**
Hrd	
…	
CtrL	6 (PID warm)
AL.nr	1
but	1
diSP	0
Ld.1	1
Ld.2	28
Ld.3	20

Keep pushed **F** until you visualize **PASS**, release **F** and through the arrows set **99**, push **F** and visualize **Pro** (protection code) from **128**, through the arrows, bring it back to **12,** and keep **F** pushed until you come back to set-point value.

Manual operation :
Keep pushed the lower left key for at least 5 sec.
The instrument will enter the "MAN" mode (see also "Ld1" switching on).
Through the arrows, "Open" and "Close" outputs are activated.
To come back to normal working keep the lower left key pushed for at least 5 sec.

Software switch off :
By keeping pushed keys **Arrow up** + **F** for more than 5 sec. the instrument switches off the software, does not command the outputs and visualize only the variable of process measured by the probe.
To restore keep pushed **F** for more than 5 sec.

Set up for temperature probe Pt100 for high temperature (350°C max.)

Verify wiring of the sensor

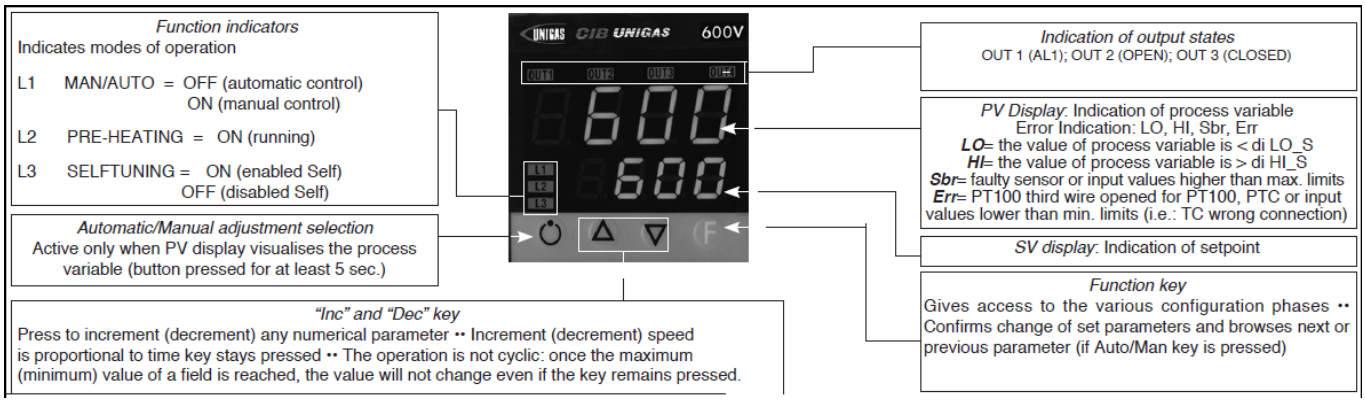

Regulation of the set-point = **80**
It can be modified by using arrows "up" and "down".
By pushing **F** you go to parameters:

Hy.P	10 (hysteresis positive for output 1 terminals 21-22 (ex Q13-Q14)
Hy.n	-5 (hysteresis negative for output 1 terminals 21-22 (ex Q13-Q14)

Keep pushing **F** until you see **PASS**, release **F** and through the arrows set **99**, push **F** and visualize **Pro** (protection code) default is **12**, through the arrows set **128** and push **F,** keep it pushed until all parameters **InF**, **CFG**, **InP**, **Out**, **PASS** are visualized.

CFG	
S.tun	0
hPb	1,2
hIt	5,83
hdt	1,33
…	

InP	
….	
tyP	30 (Pt100)
…	
dP_S	1 (decimals num.)
Lo.S	0 (min. sensor scale)
Hi.S	850,0 (max sensor scale)
oFS	0 (offset of input correction)
Lo.L	0,0 (lower set-point range limit)
Hi.L	350,0 (upper set-point range limit)

Out	
A1.r	0
…	
A1.t	3 (mode AL1 =inverse-relative-normal)
…	
rL.1	2 (AL1)
rL.2	18 (open)
rL.3	19 (close)
rEL	0
A.ty	9 (type of servocontrol command)
Ac.t	12 (servocontrol running time: SQN72.4…/STA12..=12; SQM40.265=30)
t_Lo	2
t_Hi	0.0
t.on	2
t.oF	0.0
dE.b	0,1 (dead zone in % of end scale)

PAS	99 then push and keep pushed **F** until visualization of **Hrd**
Hrd	
…	
CtrL	6 (PID warm)
AL.nr	1
but	1
diSP	0
Ld.1	1
Ld.2	28
Ld.3	20

Keep pushed **F** until you visualize **PASS**, release **F** and through the arrows set **99**, push **F** and visualize **Pro** (protection code) from **128**, through the arrows, bring it back to **12,** and keep **F** pushed until you come back to set-point value.

Manual operation:
Keep pushed the lower left key for at least 5 sec.
The instrument will enter the "MAN" mode (see also "Ld1" switching on).
Through the arrows, "Open" and "Close" outputs are activated.
To come back to normal working keep the lower left key pushed for at least 5 sec.

Software switch off :
By keeping pushed keys **Arrow up** + **F** for more than 5 sec. the instrument switches off the software, does not command the outputs and visualize only the variable of process measured by the probe.
To restore keep pushed **F** for more than 5 sec.

Set up for pressure transmitter 2 wires signal 4÷20mA

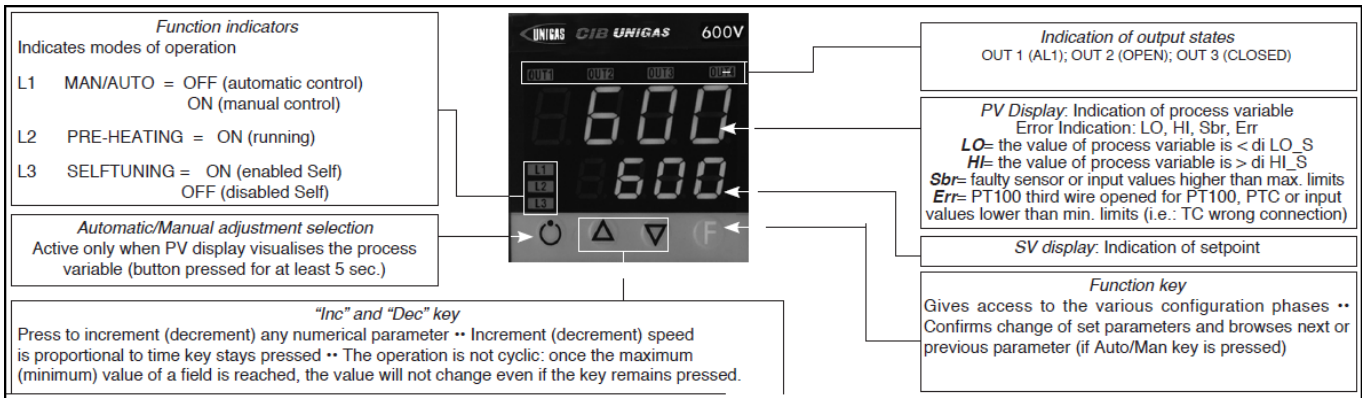

With pressure transmitters first we need to enable their power supply: remove the part as shown below, then, on the CPU unit, move the bridge from Pt100 to +Vt

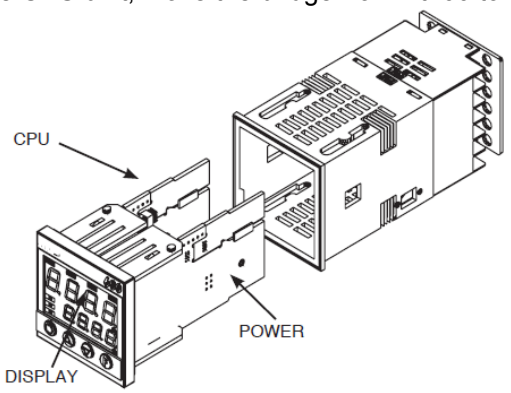

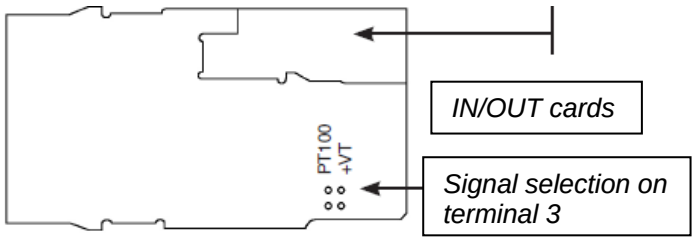

Verify wiring of the sensor

Impostazione set-point

Transmitter	**1,6bar**	**3bar**	**10bar**	**16bar**	**25bar**	**40bar**
Set-point	1bar	1,5bar	6bar	6bar	6bar	6bar

To modify it directly use "up" and "down" arrows.
By pushing **F** you go to parameter:

Transmitter	**1,6bar**	**3bar**	**10bar**	**16bar**	**25bar**	**40bar**
Hy.P	0,2bar	0,5bar	0,5bar	0,8bar	1,25bar	2bar
Hy.n	0bar	0bar	0bar	0bar	0bar	0bar

Keep pushing **F** until you see **PASS**, release **F** and through the arrows set **99**, push **F** and visualize **Pro** (protection code) default is **12**, through the arrows set **128** and push **F,** keep it pushed until all parameters **InF**, **CFG**, **InP**, **Out**, **PASS** are visualized.

CFG	
S.tun	0
hPb	5
hIt	1,33
hdt	0,33
…	

InP	
….	
tyP	44 (4÷20mA)
…	
dP_S	2 (decimals num.)

Transmitter	**1,6bar**	**3bar**	**10bar**	**16bar**	**25bar**	**40bar**	
Lo.S	0,00	0,00	0,00	0,00	0,00	0,00	min. sensor scale
Hi.S	1,60	3,00	10,00	16,00	25,00	40,00	max sensor scale
oFS	0	0	0	0	0	0	offset of input correction
Lo.L	0,00	0,00	0,00	0,00	0,00	0,00	lower set-point setting
Hi.L	1,60	3,00	10,00	16,00	25,00	40,00	upper set-point setting

Out	
A1.r	0
…	
A1.t	3 (mode AL1 =inverse-relative-normal)
…	
rL.1	2 (AL1)
rL.2	18 (open)
rL.3	19 (close)
rEL	0
A.ty	9 (type of servocontrol command)
Ac.t	12 (servocontrol running time: SQN72.4…/STA12..=12; SQM40.265=30)
t_Lo	2
t_Hi	0.0
t.on	2
t.oF	0.0
dE.b	0,1 (dead zone in % of end scale)

PAS	99 then push and keep pushed **F** until visualization of **Hrd**
Hrd	
…	
CtrL	6 (PID warm)
AL.nr	1
but	1
diSP	0
Ld.1	1
Ld.2	28
Ld.3	20

Keep pushed **F** until you visualize **PASS**, release **F** and through the arrows set **99**, push **F** and visualize **Pro** (protection code) from **128**, through the arrows, bring it back to **12,** and keep **F** pushed until you come back to set-point value.

Manual operation:
Keep pushed the lower left key for at least 5 sec.
The instrument will enter the "MAN" mode (see also "Ld1" switching on).
Through the arrows, "Open" and "Close" outputs are activated.
To come back to normal working keep the lower left key pushed for at least 5 sec.

Software switch off :
By keeping pushed keys **Arrow up** + **F** for more than 5 sec. the instrument switches off the software, does not command the outputs and visualize only the variable of process measured by the probe.
To restore keep pushed **F** for more than 5 sec.

Set -up for thermocouples type **K** or **J**

Verify wiring of the sensor

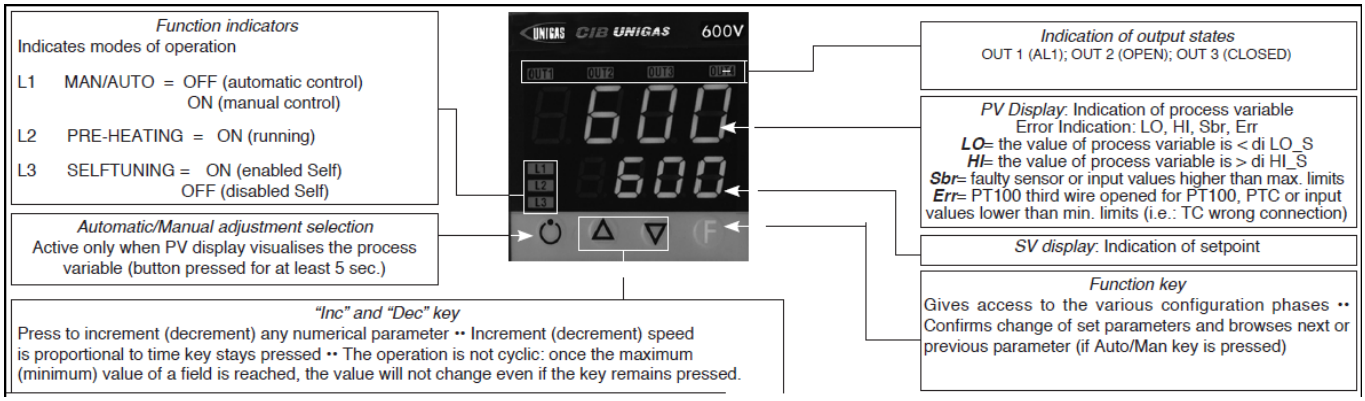

Regulation of the set-point = **80**
It can be modified by using arrows "up" and "down".
By pushing **F** you go to parameters:

Hy.P	10 (hysteresis positive for output 1 terminals 21-22 (ex Q13-Q14)
Hy.n	-5 (hysteresis negative for output 1 terminals 21-22 (ex Q13-Q14)

Keep pushing **F** until you see **PASS**, release **F** and through the arrows set **99**, push **F** and visualize **Pro** (protection code) default is **12**, through the arrows set **128** and push **F,** keep it pushed until all parameters **InF**, **CFG**, **InP**, **Out**, **PASS** are visualized.

CFG	
S.tun	0
hPb	1,2
hIt	5,83
hdt	1,33
…	

InP	
….	
tyP	2 (thermocouple **K** 0÷1300°C) / 0 (thermocouple **J** 0÷1000°C)
…	
dP_S	0 (no decimal) / 1 (1 decimal)
Lo.S	0 (min. sensor scale)
Hi.S	1300 (max sensor scale for tc **K**) / 1000 (max sensor scale for tc **J**)
oFS	0 (offset of input correction)
Lo.L	0 (lower set-point range limit)
Hi.L	1300 (upper set-point range limit) per tc **K** / 1000 for tc **J**

Out	
A1.r	0
…	
A1.t	3 (mode AL1 =inverse-relative-normal)
…	
rL.1	2 (AL1)
rL.2	18 (open)
rL.3	19 (close)
rEL	0
A.ty	9 (type of servocontrol command)
Ac.t	12 (servocontrol running time: SQN72.4…/STA12..=12; SQM40.265=30)
t_Lo	2
t_Hi	0.0
t.on	2
t.oF	0.0
dE.b	0,1 (dead zone in % of end scale)

PAS	99 then push and keep pushed **F** until visualization of **Hrd**
Hrd	
…	
CtrL	6 (PID warm)
AL.nr	1
but	1
diSP	0
Ld.1	1
Ld.2	28
Ld.3	20

Keep pushed **F** until you visualize **PASS**, release **F** and through the arrows set **99**, push **F** and visualize **Pro** (protection code) from **128**, through the arrows, bring it back to **12,** and keep **F** pushed until you come back to set-point value.

Manual operation:
Keep pushed the lower left key for at least 5 sec.
The instrument will enter the "MAN" mode (see also "Ld1" switching on).
Through the arrows, "Open" and "Close" outputs are activated.
To come back to normal working keep the lower left key pushed for at least 5 sec.

Software switch off :
By keeping pushed keys **Arrow up** + **F** for more than 5 sec. the instrument switches off the software, does not command the outputs and visualize only the variable of process measured by the probe.
To restore keep pushed **F** for more than 5 sec.

RWF50.2x & RWF50.3x

User manual

M12922CB Rel.1.0 07/2012

DEVICE INSTALLATION

Install the device using the relevant tools as shown in the figure.
To wire the device and sensors, follow the instructions on the burner wiring diagram.

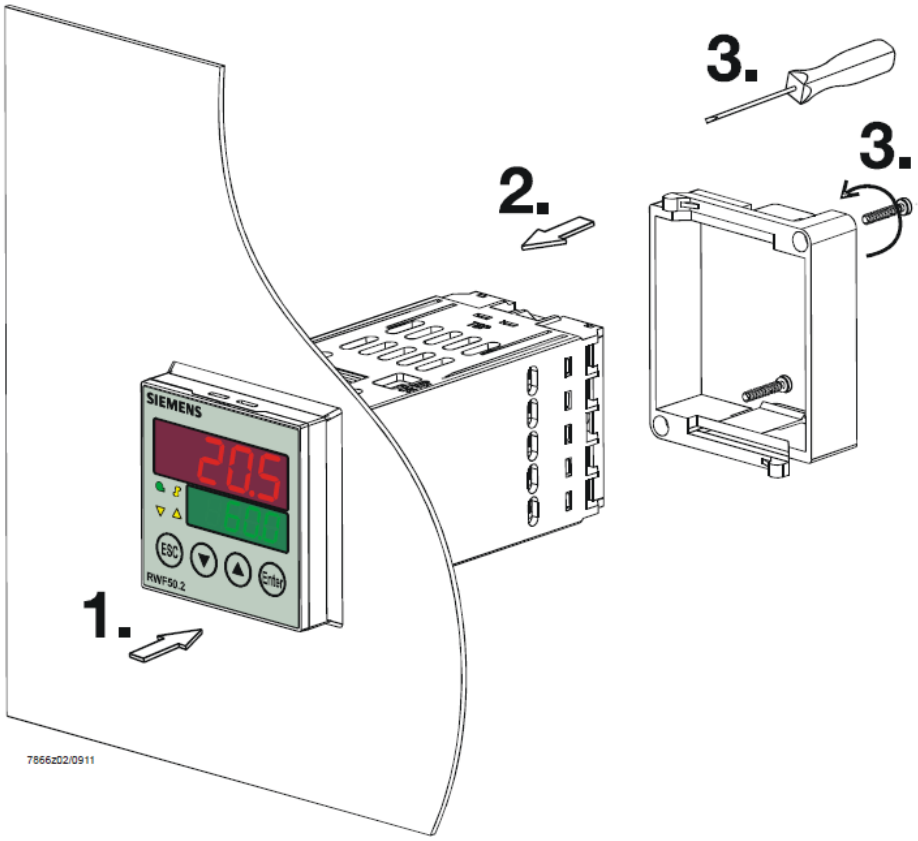

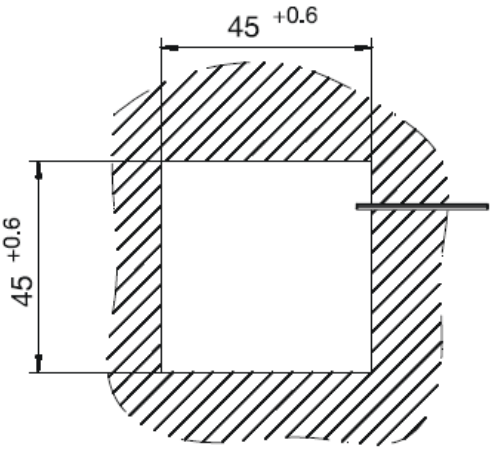

FRONT PANEL

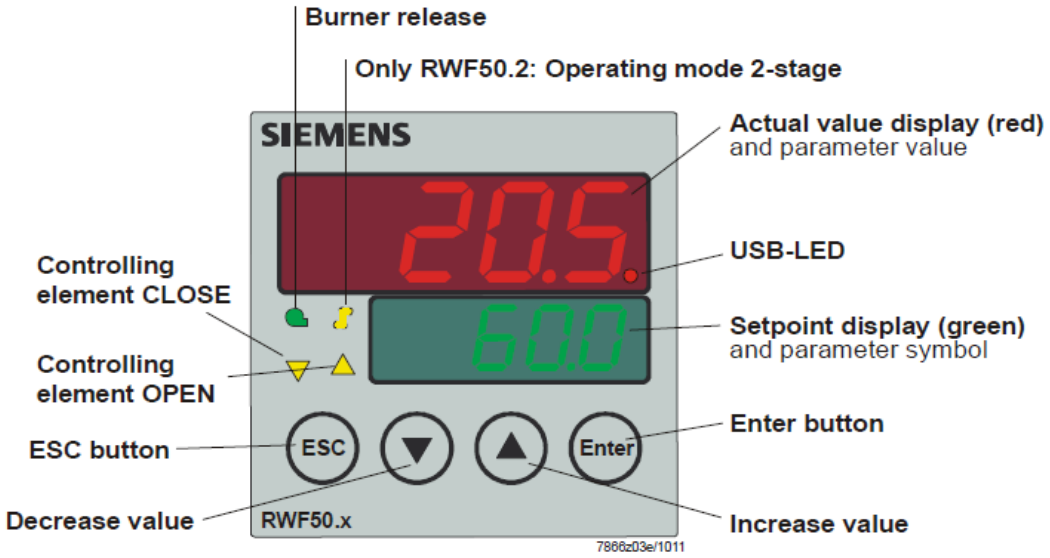

NAVIGATION MENU

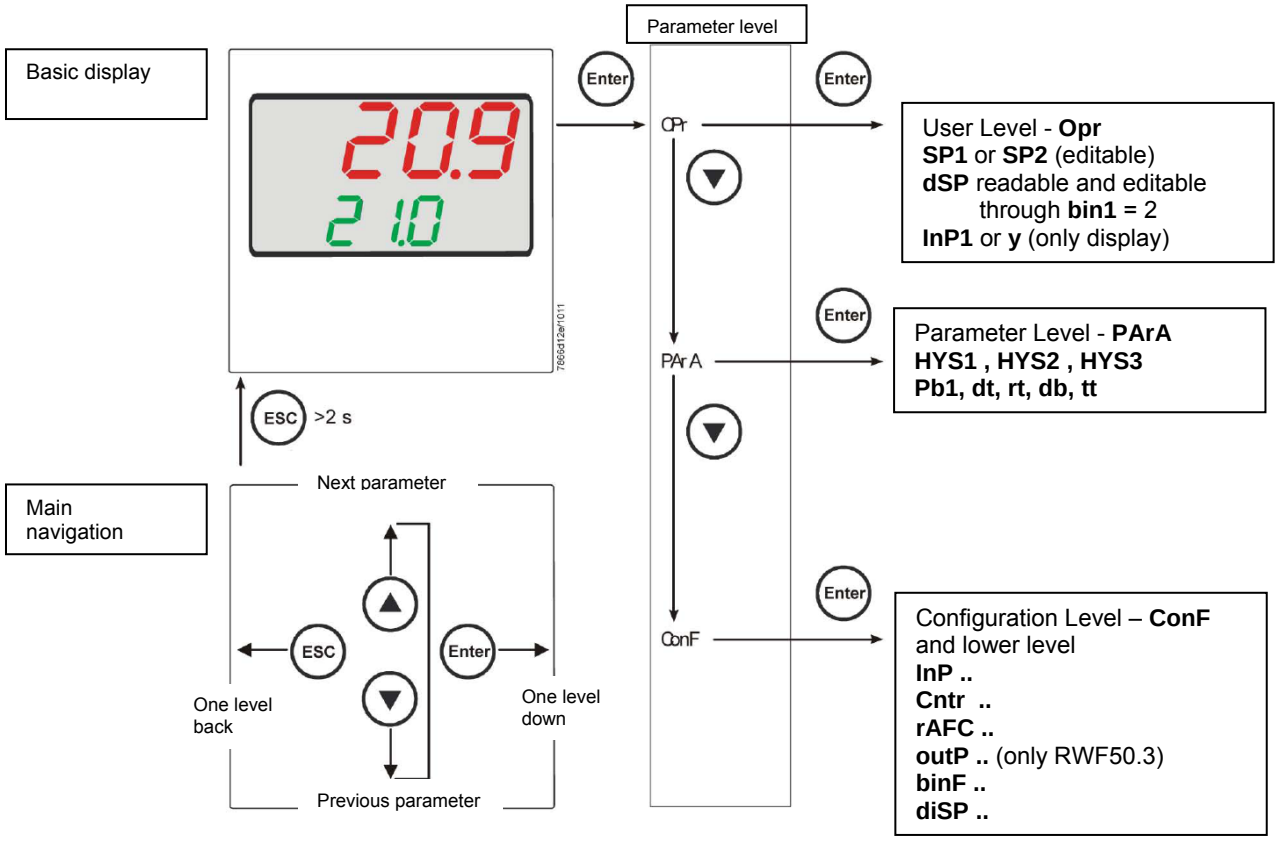

RWF5 is preset good for 90% of applications. However, you can set or edit parameters as follow:

Set-point: set or modification:
When the burner is in stand-by, (safety loop open, that is terminals 3-4/T1-T2 on the 7 pole plug open) push the **Enter** button: on the lower display (green) **Opr** appears; push **Enter** again and in the same display **SP1** appears. Push **Enter** again and the lower display (green **SP1**) flashes. Using the **up and down arrows** change the set-point on the upper display (red).Push **Enter** to confirm and push **ESC** more times to get the home position.

PID parameters set and modifications (see table below):

- Push **Enter** button, on the green display **Opr** appears; using the **down arrow,** scroll until group **PArA** is reached and push **Enter**.
- on the green display **Pb1** e appears and on the red one the set parameter.
- Push is sequence the **down or up** arrow the menu is scrolled.
- Push **Enter** to select and the **arrows** to choose the desired value. **Enter** to confirm.

Parameter	Display	Range	Factory setting	Remarks
Proportional band	PB.1	1… 9999 digit	10	Typical value for temperature
Derivative action	dt	0… 9999 sec.	80	Typical value for temperature
Integral action	rt	0… 9999 sec.	350	Typical value for temperature
Dead band (*)	db	0… 999,9 digit	1	Typical value
Servocontrol running time	tt	10… 3000 sec.	15	Set servocontrol running time
Switch-on differential (*)	HYS1	0,0… -1999 digit	-5	Value under setpoint below which the burner switches back on (1N-1P closes)
Switch-off differential 2° stage (*)	HYS2	0,0 … HYS3	3	(enable only with parameter **bin1** = 4)
Upper switch-off differential (*)	HYS3	0,0… 9999 digit	5	Value over setpoint above which the burner switches off (1N-1P opens)
Switch-on differential on cooling controller (*)	HYS4	0,0… 9999 digit	5	Do not used (enable only with parameter **CACt** = 0)
Switch-off differential 2° stage on cooling controller (*)	HYS5	HYS6…0,0 digit	5	Do not used (enable only with parameters **CACt** = 0 and **bin1** = 4)
Upper switch-off differential on cooling controller (*)	HYS6	0,0… -1999 digit	5	Do not used (enable only with parameter **CACt** = 0)
Delay modulation	q	0,0… 999,9 digit	0	Do not alter

(*)Parameters affected by setting of decimal place (**ConF > dISP** parameter **dECP**)

Setting the kind of sensor to be connected to the device:

- push the **Enter** button: on the lower display (green) **Opr** appears. Using the **up and down arrows** find **ConF.** Push **Enter** to confirm.
- Now on the green display the group **InP** appears. Push **Enter** and **InP1** is displaied. Enter to confirm.
- You are inside **InP1**; the green display shows **Sen1 (sensor type)**, while the red display shows the chosen sensor code
- Push **Enter** to enter the **Sen1** parameter, then choose the desired sensor using the **arrows.** Push **Enter** to confirm and **ESC** to escape.
- Once selected the sensor, you can modify all the other parameters using **up and down arrows** according to the tables here below.

ConF > InP >InP1

Parameter	Value	Description
SEn1 type of sensor for analog input 1	**1**	**Pt100 3 fili**
	2	Pt100 2 fili
	3	Pt1000 3 fili
	4	Pt1000 2 fili
	5	Ni1000 3 fili
	6	Ni1000 2 fili
	7	0 ÷ 135 ohm
	15	0 ÷ 20mA
	16	4 ÷ 20mA
	17	0 ÷ 10V
	18	0 ÷ 5V
	19	1 ÷ 5V
OFF1 sensor offset	-1999..**0**.. +9999	Using the measured value correction (offset), a measured value can be corrected to a certain degree, either up or down
SCL1 scale low level	-1999..**0**.. +9999	In the case of a measuring transducer with standard signal, the physical signal is assigned a display value here (for input ohm, mA, V)
SCH1 scale high level	-1999..**100**.. +9999	In the case of a measuring transducer with standard signal, the physical signal is assigned a display value here (for input ohm, mA, V)
dF1 digital filter	0…**0,6**…100	Is used to adapt the digital 2nd order input filter (time in s; 0 s = filter off)
Unit temperature unit	**1** 2	**1 = degrees Celsius** 2 = degrees Fahrenheit

(**bold** = factory settings)

Remark:
RWF50.2 e RWF50.3 cannot be connected to thermocouples.
If thermocouples have to be connected, convert the signal to a 4-20 mA one and set the RWF accordingly.

ConF > Cntr

Parameter	Value	Description
CtYP controller type	**1** 2	**1 = 3-position controller (open-stop-close only RWF50.2)** 2 = continuative action controller (only RWF50.3)
CACt control action	**1** 0	**1 = heating controller** 0 = cooling controller
SPL least value of the set-point range	-1999..**0**..+9999	set-point limitation prevents entry of values outside the defined range
SPH maximum value of the set-point range	-1999..**100**..+9999	set-point limitation prevents entry of values outside the defined range
oLLo set-point limitation start, operation limit low	**-1999**.... +9999	lower working range limit
oLHi set-point limitation end, operation limit high	-1999.... **+9999**	upper working range limit

(**bold** = factory settings)

ConF > rAFC

Activation boiler shock termic protetion:
RWF50.. can activate the thermal shock protection only on sites where the set-point is lower than 250°C and according to **rAL** parameter.

Parameter	Value	Description
FnCT function	**0** 1 2	Choose type of range degrees/time **0 = deactivated** 1 = Kelvin degrees/minute 2 = Kelvin degrees/hour
rASL ramp rate	**0,0 …** 999,9	Slope of thermal shock protection (only with functions 1 and 2)
toLP tolerance band ramp	**0**…9999	width of tolerance band (in K) about the set-point **0 = tolerance band inactive** 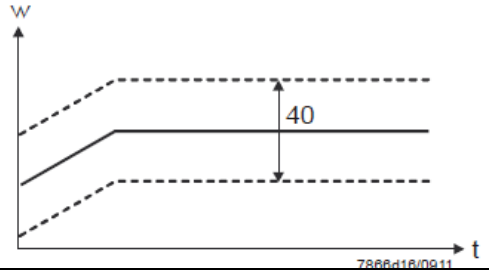
rAL ramp limit	**0**…250	Ramp limit. When this value is lower than the temperature set-point, the RWF controls the output increasing the temp set point step by step according to rASL. If this is over the temp set point, the control is performed in cooling.

(**bold** = factory settings)

ConF > OutP (parameter under group only for RWF50.3)

Parameter	Value	Description
FnCt tipo di controllo	 1 **4**	1 = analog input 1 doubling with possibility to convert (depending on par **SiGn**) **4 = modulation controller**
SiGn type of output signal	 **0** 1 2	physical output signal (terminals A+, A-) **0 = 0÷20mA** 1 = 4÷20mA 2 = 0÷10V
rOut Value when out of input range	 **0**…101	 signal (in percent) when measurement range is crossed
oPnt zero point	 -1999…**0**..+9999	value range of the output variable is assigned to a physical output signal Per default, the setting corresponds to 0...100% angular positioning for the controller outputs (terminals A+, A-) (effective only with **FnCt** = 1)
End End value	 -1999…**100**..+9999	value range of the output variable is assigned to a physical output signal Per default, the setting corresponds to 0...100% angular positioning for the controller outputs (terminals A+, A-) (effective only with **FnCt** = 1)

(**bold** = factory settings)

ConF > binF

Parameter	Value	Description
bin1 digital inputs (terminals DG - D1)	 **0** 1 2 4	**0 = without function** 1 = set-point changeover (SP1 / SP2) 2 = set-point shift (**Opr** > **dSP** parameter = value of set-point modify) 4 = changeover of operating mode open – modulating operation; close – 2 stage operation.

(**bold** = factory settings)

ConF > dISP

Parameter	Value	Description
diSU upper display (red)	 0 **1** 4 6 7	display value for upper display: 0 = display power-off **1 = analog input value** 4 = Controller's angular positioning 6 = set-point value 7 = end value with thermal shock protection
diSL lower display (green)	 0 1 4 **6** 7	display value for lower display: 0 = display power-off 1 = analog input value 4 = Controller's angular positioning **6 = set-point value** 7 = end value with thermal shock protection
tout timeout	 0..**180**..250	time (s) on completion of which the controller returns automatically to the basic display, if no button is pressed
dECP decimal point	**0** 1 2	**0 = no decimal place** 1 = one decimal place 2 = two decimal places
CodE level lockout	**0** 1 2 3	**0 = no lockout** 1 = configuration level lockout (ConF) 2 = Parameter and configuration level lockout (PArA & ConF) 3 = keyboard lockout

(**bold** = factory settings)

Manual control :

- in order to manual change the burner load, while firing keep pushing the **ESC** button for more than 5 s; on the lower green display **Hand** appears.
- using the **UP** and **DOWN** arrows, the load varies.
- Keep pushing the **ESC** button for getting the normal operation again.
- **NB:** every ime the device shuts the burner down (start led switched off - contact 1N-1P open), the manual control is not active.

Device self-setting (auto-tuning):

If the burner in the steady state does not respond properly to heat generator requests, you can activate the Device's self-setting function, which recalculates PID values for its operation, deciding which are most suitable for the specific kind of request

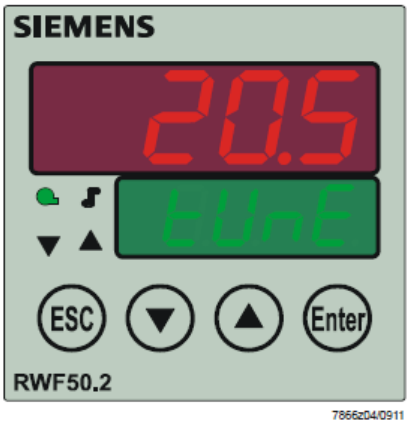

Follow the below instructions:
push the **UP** and **DOWN** arrows for more than 5 s; on the green lower display **TUNE** appears. Now the device pushes the burner to increase and decrease its output. During this time, the device calculates PID parameters (**Pb1, dt** and **rt**). After the calculations, the TUNE is automatically deactivated and the device has already stored them.
In order to stop the Auto-tuning function while it works, push again the **UP** and **DOWN** arrows for more than 5 s. The calculated PID parameters can be manually modified following the previously described instructions.

Display of software version :

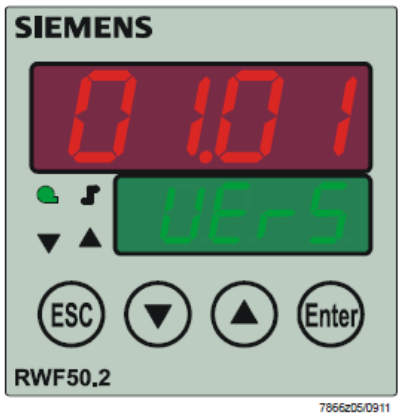

The software version is shown by pushing **Enter + UP arrow** on the upper display

Electric connection :

With 7 pins connector version

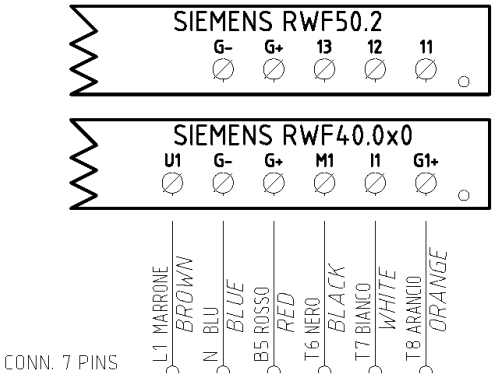

With terminals version

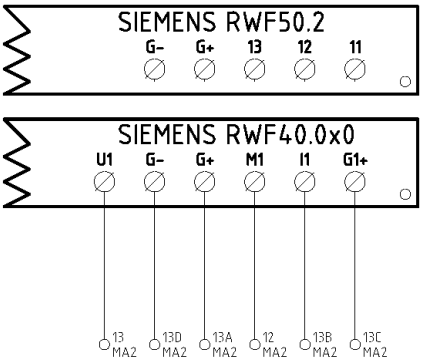

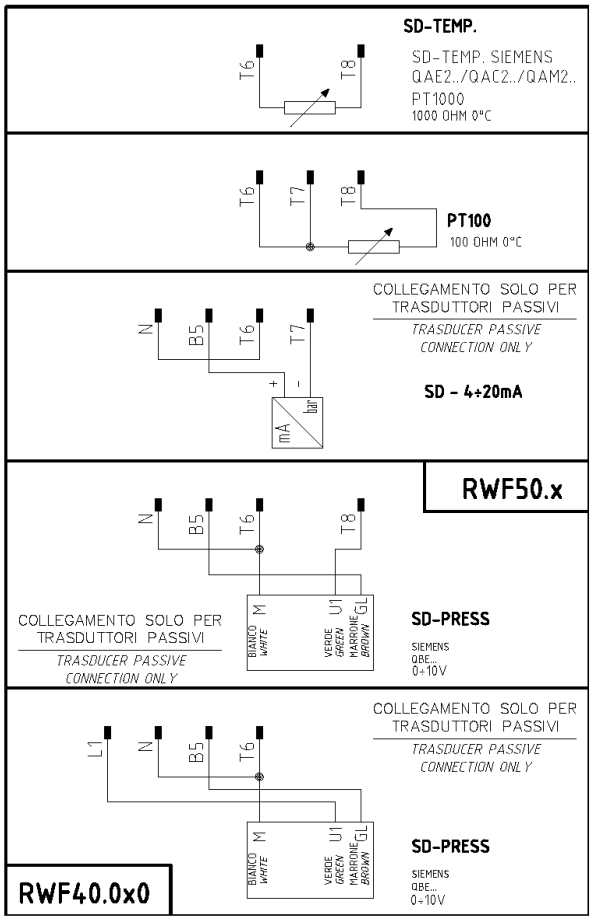

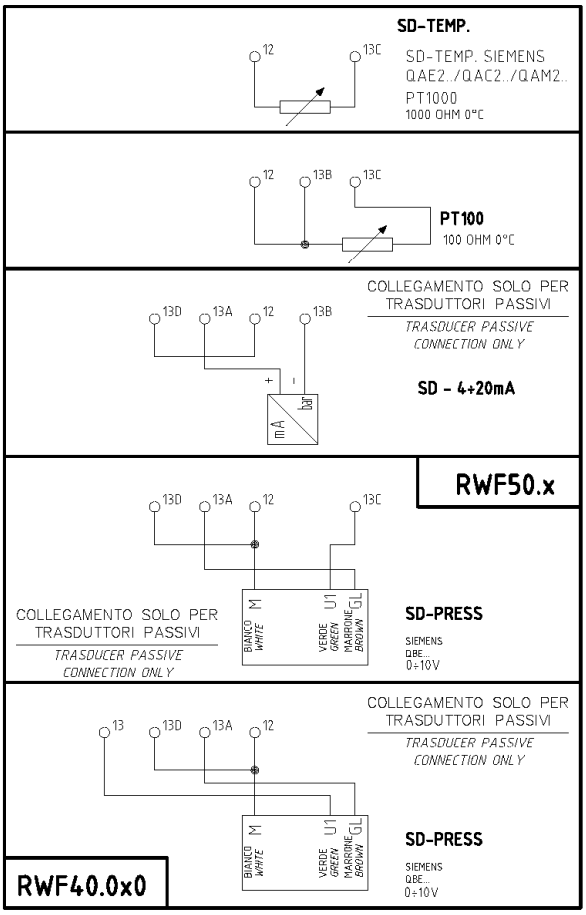

Matches terminals between RWF50.2 and RWF40.0x0

Parameters summarising for RWF50.2x:

Navigation menù / Types of probe	Conf					Conf			PArA						Opr
	Inp					Cntr		diSP							
	Inp1														
	SEn1	OFF1	SCL1	SCH1	Unit	SPL	SPH	dECP	Pb. 1	dt	rt	tt	HYS1 (*)	HYS3 (*)	SP1 (*)
Siemens QAE2120…	6	0	needless	needless	1	30	95	1	10	80	350	(#)	-5	5	80 °C
Siemens QAM2120..	6	0	needless	needless	1	0	80	1	10	80	350	(#)	-2,5	2,5	40°C
Pt1000 (130°C max.)	4	0	needless	needless	1	30	95	1	10	80	350	(#)	-5	5	80°C
Pt1000 (350°C max.)	4	0	needless	needless	1	0	350	1	10	80	350	(#)	-5	10	80°C
Pt100 (130°C max.)	1	0	needless	needless	1	0	95	1	10	80	350	(#)	-5	5	80°C
Pt100 (350°C max)	1	0	needless	needless	1	0	350	1	10	80	350	(#)	-5	10	80°C
Probe 4÷20mA / 0÷1,6bar	16	0	0	160	needless	0	160	0	5	20	80	(#)	0	20	100 kPa
Probe 4÷20mA / 0÷3bar	16	0	0	300	needless	0	300	0	5	20	80	(#)	0	20	200 kPa
Probe 4÷20mA / 0÷10bar	16	0	0	1000	needless	0	1000	0	5	20	80	(#)	0	50	600 kPa
Probe 4÷20mA / 0÷16bar	16	0	0	1600	needless	0	1600	0	5	20	80	(#)	0	80	600 kPa
Probe 4÷20mA / 0÷25bar	16	0	0	2500	needless	0	2500	0	5	20	80	(#)	0	125	600 kPa
Probe 4÷20mA / 0÷40bar	16	0	0	4000	needless	0	4000	0	5	20	80	(#)	0	200	600 kPa
Siemens QBE2002 P4	17	0	0	400	needless	0	400	0	5	20	80	(#)	0	20	200 kPa
Siemens QBE2002 P10	17	0	0	1000	needless	0	1000	0	5	20	80	(#)	0	50	600 kPa
Siemens QBE2002 P16	17	0	0	1600	needless	0	1600	0	5	20	80	(#)	0	80	600 kPa
Siemens QBE2002 P25	17	0	0	2500	needless	0	2500	0	5	20	80	(#)	0	125	600 kPa
Siemens QBE2002 P40	17	0	0	4000	needless	0	4000	0	5	20	80	(#)	0	200	600 kPa
Segnale 0÷10V	17	0	to be fixed	to be fixed	needless	to be fixed	to be fixed	to be fixed	5	20	80	(#)	to be fixed	to be fixed	to be fixed
Segnale 4÷20mA	16	0	to be fixed	to be fixed	needless	to be fixed	to be fixed	to be fixed	5	20	80	(#)	to be fixed	to be fixed	to be fixed

NOTE :
(#) tt – servo control run time
SQL33 ; STM30; SQM10; SQM40; SQM50; SQM54 = **30** (secondi) - STA12B3.41; SQN30.251; SQN72.4A4A20 = **12** (secondi)
(*)These values are factory set - values **must be** set during operation at the plant based on the real working temperature/pressure value.
WARNING : With pressure probes the parameters SP1, SCH, SCL, HYS1, HYS3 must be selected, and visualized in kPa (kilo Pascal). (1bar = 100.000Pa = 100kPa)

APPENDIX: PROBES CONNECTION

To assure the utmost comfort, the control system needs reliable information, which can be obtained provided the sensors have been installed correctly. Sensors measure and transmit all variations encountered at their location.

Measurement is taken based on design features (time constant) and according to specific operating conditions.With wiring run in raceways, the sheath (or pipe) containing the wires must be plugged at the sensor's terminal board so that currents of air cannot affect the sensor's measurements.

Ambient probes (or ambient thermostats)

Installation

The sensors (or room thermostats) must be located in

reference rooms in a position where they can take real temperature measurements without being affected by

foreign factors.

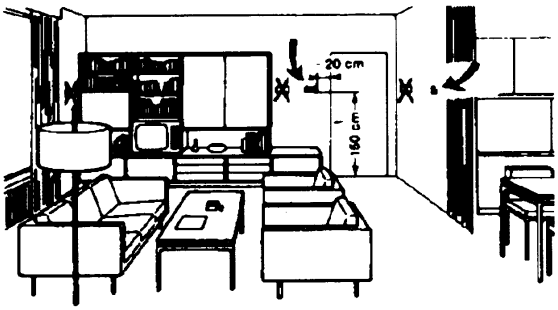

Outside probes (weather)

Installation

In heating or air-conditioning systems featuring adjustment in response to outside temperature, the sensor's positioning is of paramount importance.

It's good to be admired …even better to be effective

Heating systems: the room sensor must not be installed in rooms with heating units complete with thermostatic valves. Avoid all sources of heat foreign to the system.

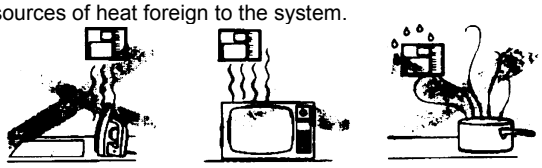

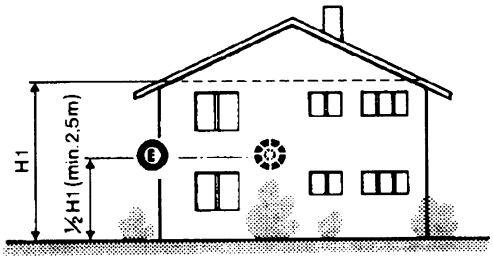

General rule: on the outer wall of the building where the living rooms are, never on the south-facing wall or in a position where they will be affected by morning sun. If in any doubt, place them on the north or north-east façade.

Location

On an inner wall on the other side of the room to heating unitsheight above floor 1.5 m, at least 1.5 m away from external sources of heat (or cold).

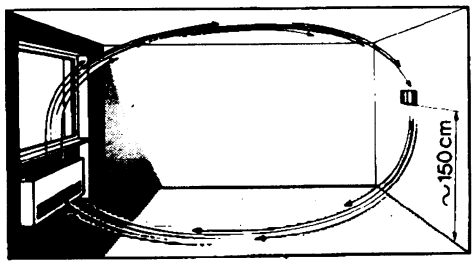

Positions to be avoided

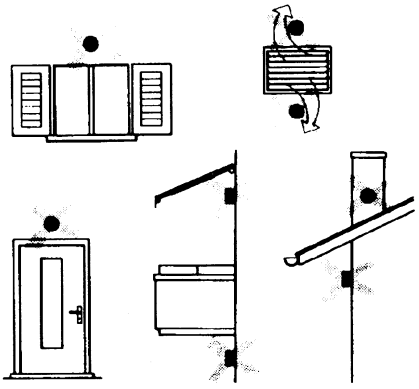

Installation position to be avoided

near shelving or alcoves and recesses, near doors or win-dows, inside outer walls exposed to solar radiation or currents of cold air, on inner walls with heating system pipes, domestic hot water pipes, or cooling system pipes running through them.

Avoid installing near windows, vents, outside the boiler room, on chimney breasts or where they are protected by balconies, cantilever roofs.

The sensor must not be painted (measurement error).

Duct or pipe sensors

Installing temperature sensors

For measuring outlet air:

- after delivery fan or
- after coil to be controlled, at a distance of at least 0,5 m

For measuring room temperature:

- before return air intake fan and near room's return airintake. For measuring saturation temperature: after mist eliminator.

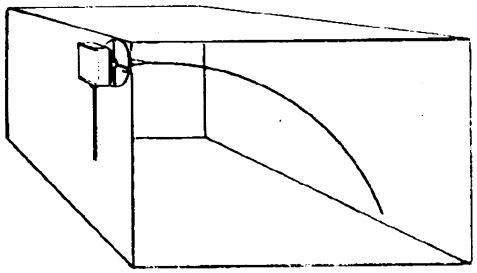

Bend 0.4m sensor by hand (never use tools) as illustrated.

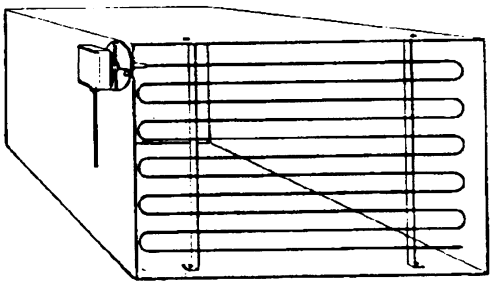

Use whole cross-section of duct, min. distance from walls 50 mm, radius of curvature 10 mm for 2m or 6m sensors.

Installing combined humidity sensors

As max. humidity limit sensor on outlet (steam humidifiers).

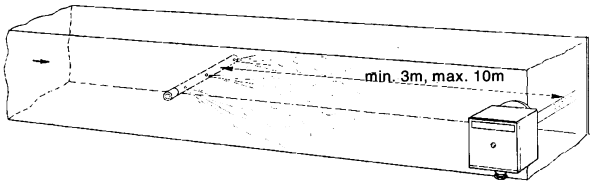

Installing pressure sensors

A - installation on ducts carrying fluids at max. temperature 80°C

B - installation on ducts at temperature over 80°C and for refrigerants

C - installation on ducts at high temperatures:

- increase length of siphon
- place sensor at side to prevent it being hit by hot air coming from the pipe.

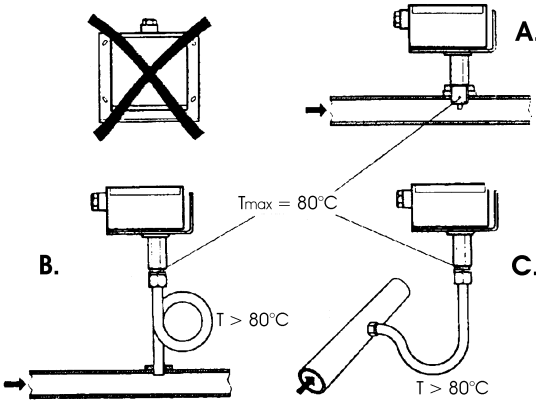

Installing differential pressure sensors for water

- Installation with casing facing down not allowed.-With temperature over 80°C, siphons are needed.
- To avoid damaging the sensor, you must comply with the following instructions

when installing:

- make sure pressure difference is not greater than thevalue permitted by the sensor
- when there are high static pressures, make sure you insert shutoff valves A-B-C.

Putting into operation

Start disable

1=open C1=open C

2=open A2=close B

3=open B3=close A

4= close C

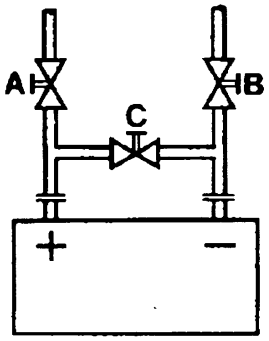

Immersion or strap-on sensors

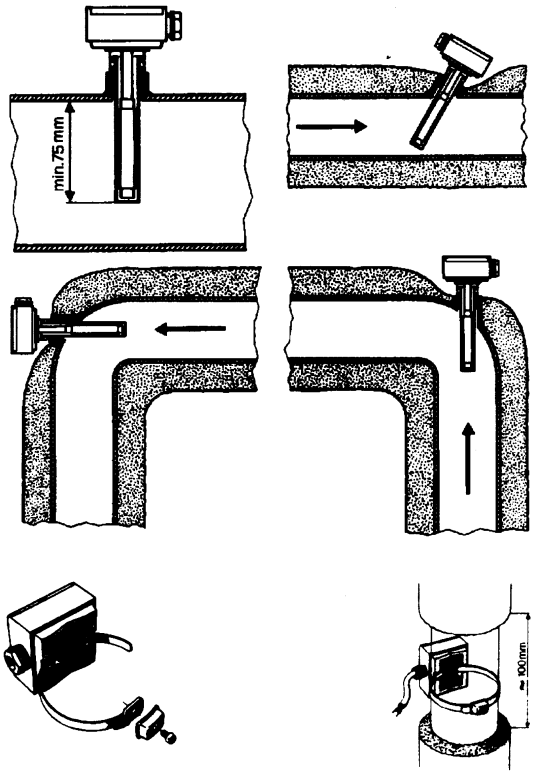

Placing the probes (QAD22.../QAE21.../QAP21.../RCA...)

With pumps on outlet

with 3 ways valves / with 4 ways valves

Panel system / burner control

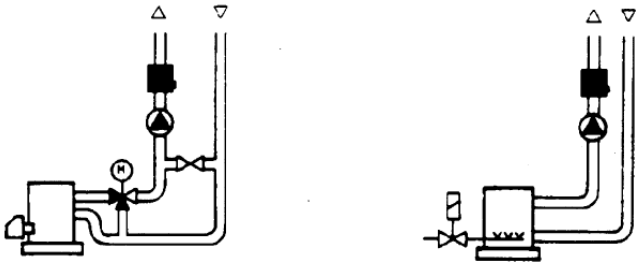

With pumps on return

with 3 ways valves / with 4 ways valves

Immersion probes installation

Sensors must be installed on the stretch of pipe in which fluid circulates all the time.

The rigid stem (sensing element doing the measuring) must be inserted by at least 75mm and must face the direction of flow.

Recommended locations: on a bend or on a straight stretch of pipe but tilted by 45° and against the flow of fluid.

Protect them to prevent water from infiltrating (dripping gates, condensation from pipes etc.)

Installing QAD2.. strap-on sensors

Make sure fluid is circulating in the chosen location.

Eliminate insulation and paintwork (including rust inhibitor) on a min. 100mm length of pipe.

Sensors come with straps for pipes up to 100 mm in diameter

Strap-on or immersion sensors?

QAD2.. strap-on sensors

Advantages :

- 10 sec. time constant
- Installed with system running (no plumbing work)
- Installation can be changed easily if it proves incorrect.

Limits:

- Suitable for pipe diameters max. 100 mm
- Can be affected by currents of air etc.

QAE2... immersion sensors

Advantages:

- Measure "mean" fluid temperature
- No external influence on measurement such as: currents of air, nearby pipes etc.

Limits:

- Time constant with sheath: 20 sec.
- Hard to change installation position if it proves incorrect.

Installing differential pressure probes for air

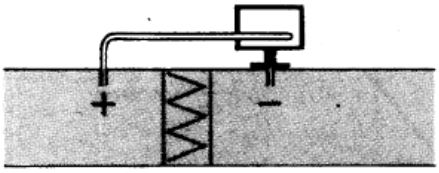

A - Control a filter (clogging)

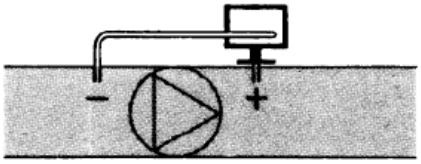

B - Control a fan (upstream/downstream)

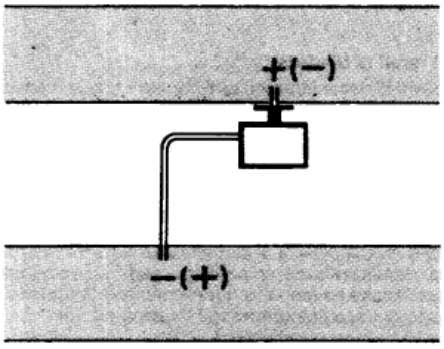

C - Measurement of difference in pressure between two ducts

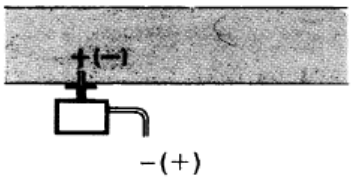

D - Measurement of difference in pressure between two rooms or of inside of duct and outside

Basic principles

Measuring static pressure(i.e. pressure exerted by air on pipe walls)

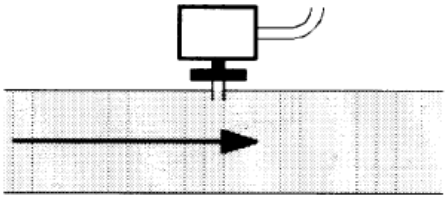

Measuring dinamic pressure

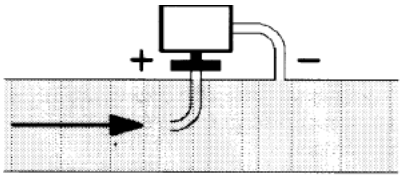

$$Pd = \frac{y\,\vartheta^2}{2g}$$

Key

y	Kg/m^3, specific weight of air
□	m/s, air speed
g	9.81 m/s^2 gravity acceleration
Pd	mm C.A., dynamic pressure

Measuring total pressure

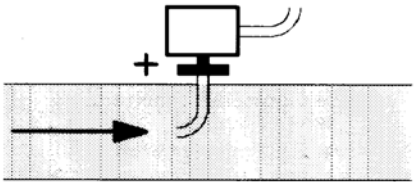

Spare parts

Description	Code
Modulator RWF50.2 (uscita a 3 punti - apri, fermo, chiudi)	2570148
Modulator RWF50.3 (uscita continua 0÷20mA, 4÷20mA, 0÷10V)	2570149
Temperature probe Siemens QAE2120.010A (30÷130°C)	2560101
Temperature probe Siemens QAM2120.040 (-15÷+50°C)	2560135
Thermoresistor Pt1000 ø6mm L100mm (30÷130°C)	2560188
Thermoresistor Pt1000 ø10mm L200mm (0÷350°C)	2560103
Thermoresistor Pt100 ø10mm L200mm (0÷350°C)	2560145
Thermoresistor Pt100 ø8mm L85mm (0÷120°C)	25601C3
Pressure probe Siemens QBE2.. P4 (0÷4bar)	2560159
Pressure probe Siemens QBE2.. P10 (0÷10bar / signal 0÷10V)	2560160
Pressure probe Siemens QBE2.. P16 (0÷16bar / signal 0÷10V)	2560167
Pressure probe Siemens QBE2.. P25 (0÷25bar / signal 0÷10V)	2560161
Pressure probe Siemens QBE2.. P40 (0÷40bar / signal 0÷10V)	2560162
Pressure probe Danfoss MBS 3200 P 1,6 (0÷1,6bar / signal 4÷20mA)	2560189
Pressure probe Danfoss MBS 3200 P 10 (0÷10bar / signal 4÷20mA)	2560190
Pressure probe Danfoss MBS 3200 P 16 (0÷16bar / signal 4÷20mA)	2560191
Pressure probe Danfoss MBS 3200 P 25 (0÷25bar / signal 4÷20mA)	2560192
Pressure probe Danfoss MBS 3200 P 40 (0÷40bar / signal 4÷20mA)	2560193
Pressure probe Siemens 7MF1565-3BB00-1AA1 (0÷1,6bar / signal 4÷20mA)	25601A3
Pressure probe Siemens 7MF1565-3CA00-1AA1 (0÷10bar / signal 4÷20mA)	25601A4
Sonda di pressione Siemens 7MF1565-3CB00-1AA1 (0÷16bar / signal	25601A5
Pressure probe Siemens 7MF1565-3CD00-1AA1 (0÷25bar / signal 4÷20mA)	25601A6
Pressure probe Siemens 7MF1565-3CE00-1AA1 (0÷40bar / signal 4÷20mA)	25601A7
Pressure probe Gefran E3E B1V6 MV (0÷1,6bar / segnale 4÷20mA)	25601C4
Pressure probe Danfoss E3E B01D MV (0÷10bar / segnale 4÷20mA)	25601C5
Pressure probe Danfoss E3E B16U MV (0÷16bar / segnale 4÷20mA)	25601C6
Pressure probe Danfoss E3E B25U MV (0÷25bar / segnale 4÷20mA)	25601C7
Pressure probe Danfoss E3E B04D MV (0÷40bar / segnale 4÷20mA))	25601C8

Note: Specifications and data subject to change. Errors and omissions excepted.

KM3 Modulator

USER MANUAL

M12927CA Rel.1.0 10/2020

MOUNTING

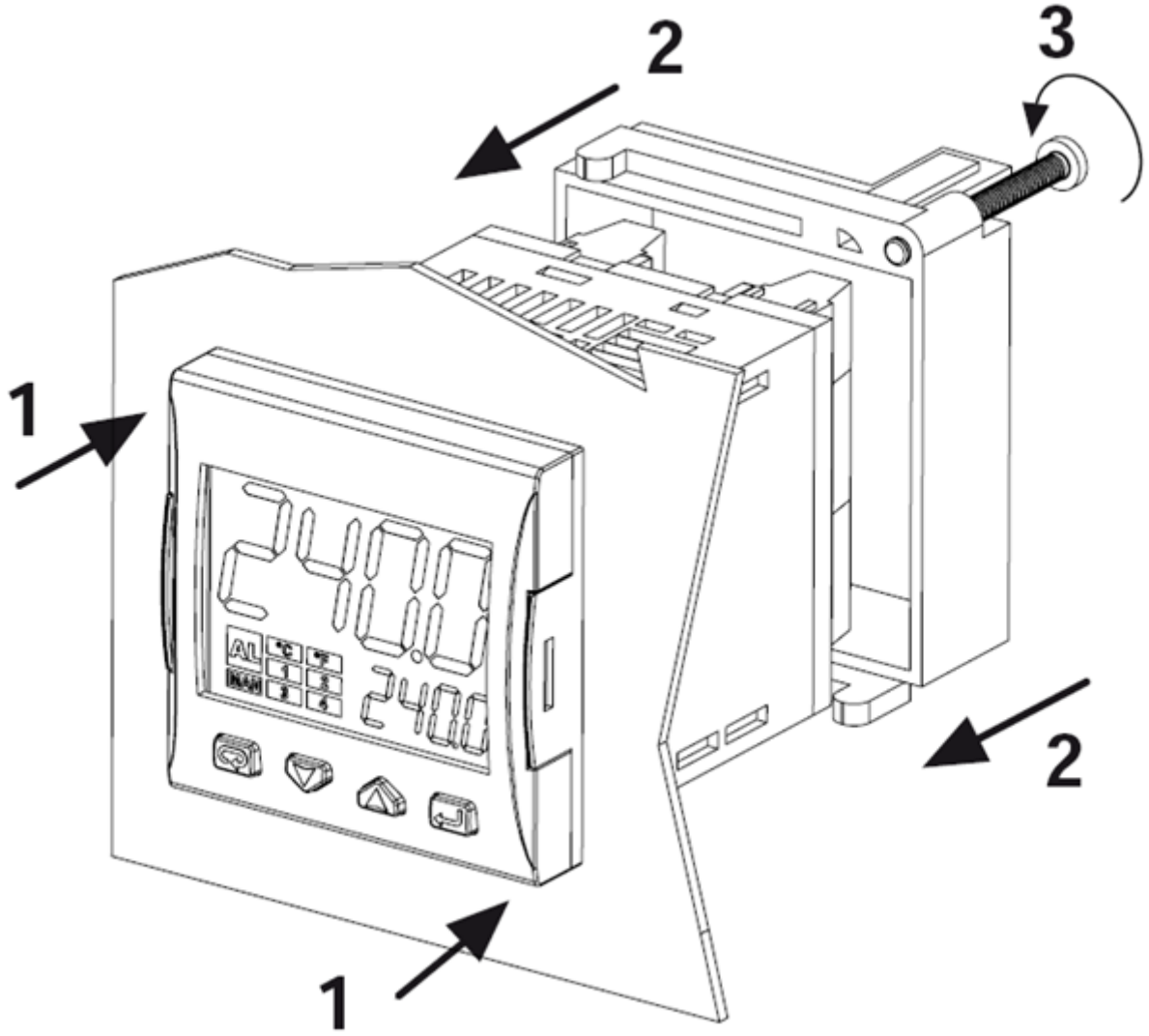

DISPLAY AND KEYS

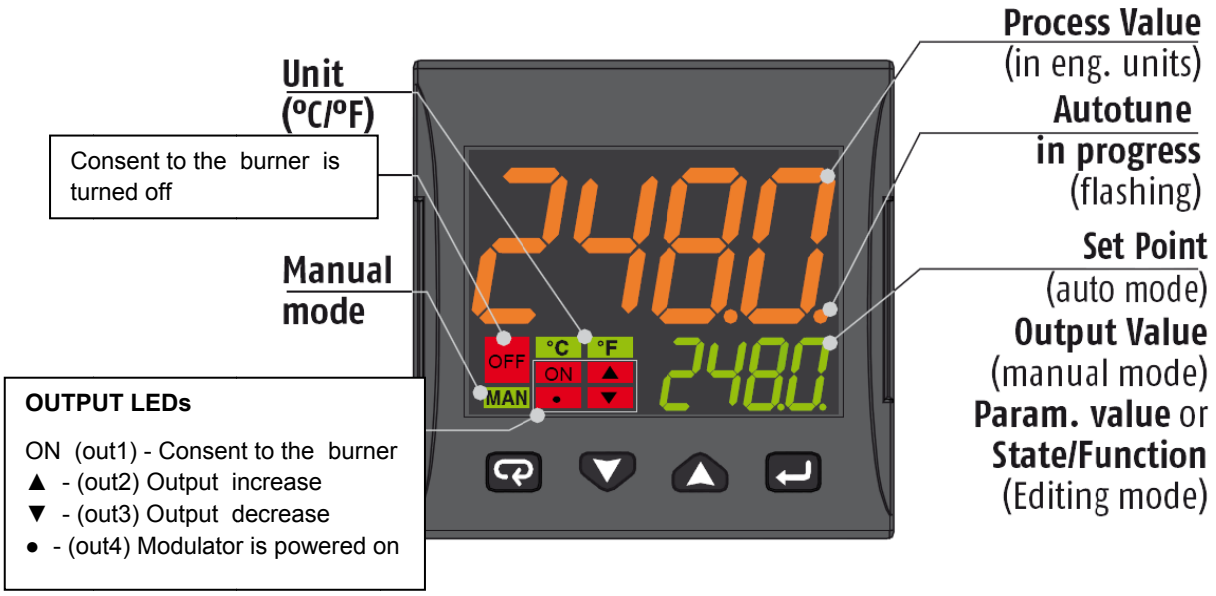

	Operator Mode	Editing Mode
	Access to: - Operator Commands (Timer, Setpoint selection ...) - Parameters - Configuration	Confirm and go to Next parameter
	Access to: - Operator additional information (Output value, running time ...)	Increase the displayed value or select the next element of the parameters list
	Access to: - Set Point	Decrease the displayed value or select the previous element
	Programmable key: Start the programmed function (Autotune, Auto/Man, Timer ...)	Exit from Operator commands/Parameter setting/Configuration

CONNECTIONS DIAGRAM

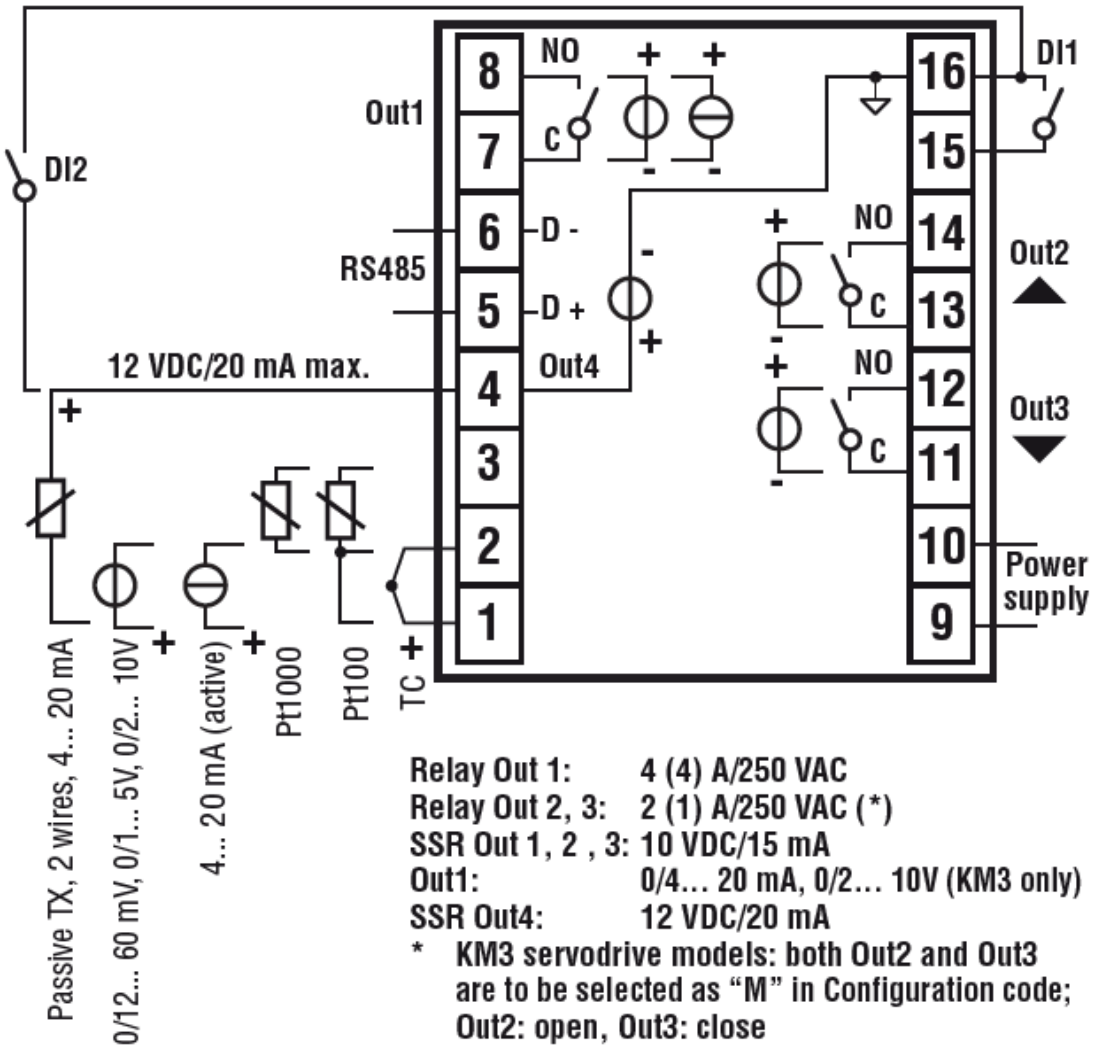

Probe connection:

- **PT1000/NTC/PTC**: between terminal 3 and 2
- **PT 100**: between terminal 3 and 2 with terminal 1
- **Passive pressure probe** 0/4-20 mA: between terminal 4 (+) e 1 (-)
  Note: out4 must be activated (IO4F must be setted to ON)
- **Powered pressure probe** 0/4-20 mA between terminal 4 (power supply), 2 (negative) e 1 (positive)
  Note: set IO4F to ON to activate Out4

Power supply connection:

- **Neutral wire:** terminal 9
- **Phase:** terminal 10 (100…240 Vac)
- Close terminals 15-16 to switch to the set point 2

Output connection:

- **Channel 1:** terminal 7 and 8 (burner on – off)
- **Channel 2:** terminal 11 and 12 (servomotor opens)
- **Channel 3:** terminal 13 and 14 (servomotor closes)

SETPOINT AND HYSTERESIS CONFIGURATION (SP, AL1, HAL1 parameters)

Push the ↵ button to enter into the setpoint configuration:

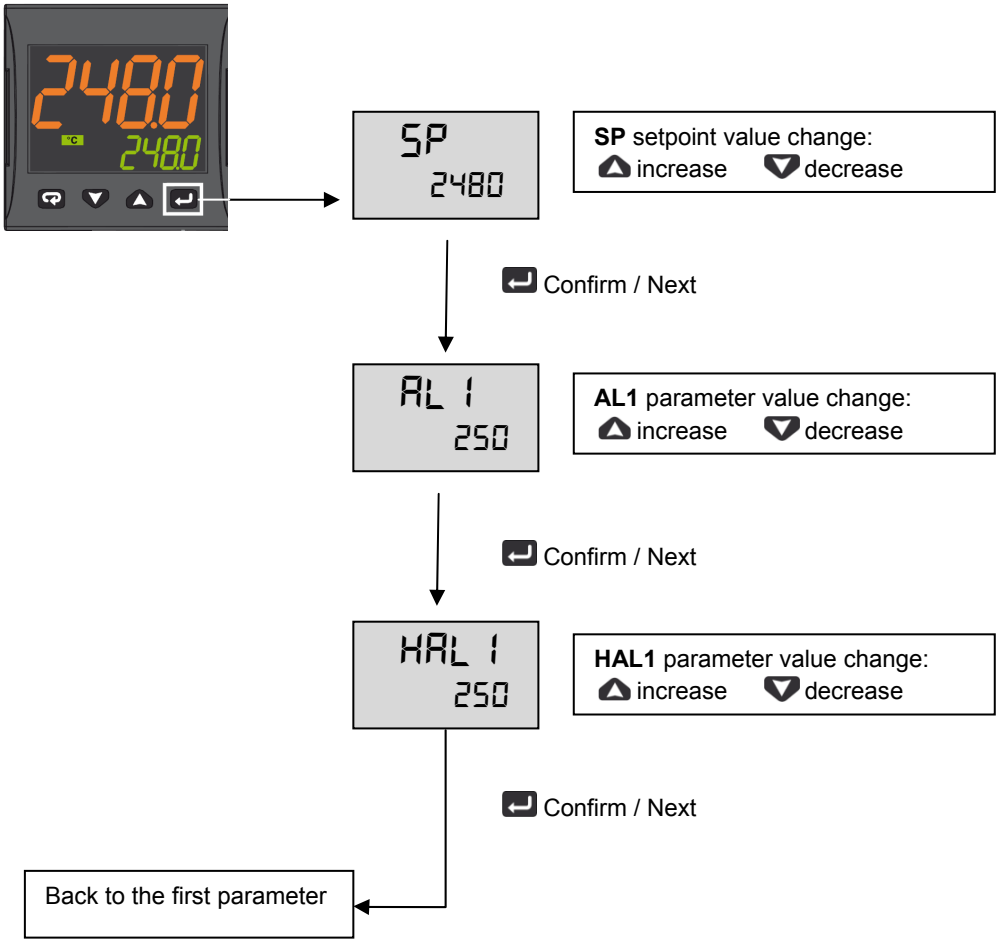

To return to normal mode, press the ↩ key for 3 seconds or wait the 10s timeout

Operation example

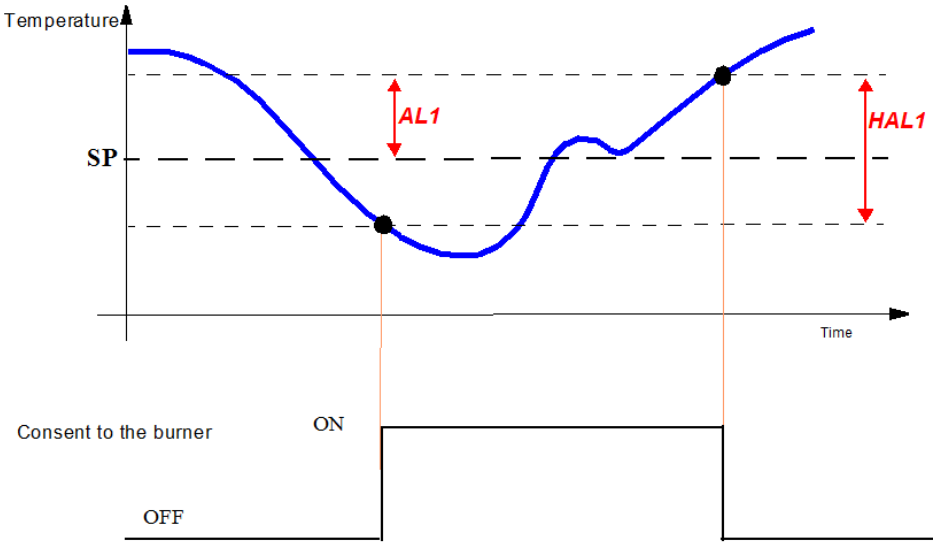

LIMITED ACCESS LEVEL

Proceed as follows to change some parameters that are not visible in standard user mode:

Press the ↵ key for 3 seconds

Password = 20

Access to parameter:

▲	Increase the displayed value
▼	Decrease the displayed value
↵	Confirm and go to next parameter

Param	Description	Values	Default
SEnS	Input type	Pt1 = RTD Pt100 Pt10 = RTD Pt1000 0.20 = 0..20mA 4.20 = 4..20mA Pressure probe 0.10 = 0..10V 2.10 = 2..10V crAL= Thermocouple K	Depends on the probe
SP	Set point 1	SPLL ... SPLH	See page 7
AL1	AL1 threshold	AL1L... AL1H (E.U.)	
HAL1	AL1 hysteresis	1... 9999 (E.U.)	
Pb	Proportional band	1... 9999 (E.U.)	
ti	Integral time	0 (oFF) ... 9999 (s)	
td	Derivative time	0 (oFF) ... 9999 (s)	
Str.t	Servomotor stroke time	5...1000 seconds	
db.S	Servomotor dead band	0...100%	
SPLL	Minimum set point value	-1999 ... SPHL	
SPHL	Maximum set point value	SPLL ... 9999	
dp	Decimal point position	0... 3	
SP 2	Set point 2	SPLL...SPLH	60
A.SP	Selection of the active set point	"SP" ... " nSP"	SP

To exit the parameter setting procedure press the ↩ key (for 3 s) or wait until the timeout expiration (about 30 seconds)

Probe parameters configuration MODULATORE ASCON KM3

Parameter Group	**inP**						**AL1**		**rEG**					**SP**		
Parameter	**Sens**	**dp**	**SSC**	**FSc**	**unit**	**IO4.F (**)**	**AL1 (***)**	**HAL1 (***)**	**Pb (***)**	**ti (***)**	**td (***)**	**Str.t**	**db.S**	**SPLL**	**SPHL**	**SP (***)**
Probes		Dec Point	Scale Min	Scale Max			Off	On	p	i	d	servo time s	Band Mo.	SP Min	SP Max	Set point
Pt1000 (130°C max)	Pt10	1			°C	on	5	10	10	350	1	*	5	30	95	80
Pt1000 (350°C max)	PT10	1			°C	on	10	10	10	350	1	*	5	0	350	80
Pt100 (130°C max)	PT1	1			°C	on	5	10	10	350	1	*	5	0	95	80
Pt100 (350°C max)	Pt1	1			°C	on	10	10	10	350	1	*	5	0	350	80
Pt100 (0÷100°C 4÷20mA)	4.20	1	0	100		on	5	10	10	350	1	*	5	0	95	80
Thermocouple K (1200°C max)	crAL	0			°C	on	20	25	10	350	1	*	5	0	1200	80
Thermocouple J (1000°C max)	J	0			°C	on	20	25	10	350	1	*	5	0	1000	80
4-20mA / 0-1,6barPressure probe	4.20	0	0	160		on	20	20	5	120	1	*	5	0	160	100
4-20mA / 0-10bar Pressure probe	4.20	0	0	1000		on	50	50	5	120	1	*	5	0	1000	600
4-20mA / 0-16bar Pressure probe	4.20	0	0	1600		on	80	80	5	120	1	*	5	0	1600	600
4-20mA / 0-25bar Pressure probe	4.20	0	0	2500		on	125	125	5	120	1	*	5	0	2500	600
4-20mA / 0-40bar Pressure probe	4.20	0	0	4000		on	200	200	5	120	1	*	5	0	4000	600
QBE2002 / 0-25bar Pressure probe	0.10	0	0	2500		0n	125	125	5	120	1	*	5	0	2500	600

Note:

(*) Str.t - Servomotor stroke time
SQL33; STM30; SQM10; SQM40; SQM50; SQM54 = 30 (Seconds)
STA12B3.41; SQN30.251; SQN72.4A4A20 = 12 (Seconds)

(**) Out 4 … on Display led °4 must be switched on, otherwise change the io4.F parameter value from "on" to "out4", confirm the value, quit the configuration mode then change again the io4.F parameter value from "out4" to "on".

(***) Factory settings. These values must be adapted to machine conditions

N.B. For pressure probe, SP, SPHL, SPLL parameters values are expressed in Kpa (1 bar = 100 Kpa).

CONFIGURATION

How to access configuration level

The configuration parameters are collected in various groups. Every group defines all parameters related with a specific function (e.g.: control, alarms, output functions).

1. Push the button for more than 5 seconds. The upper display will show PASS while the lower display will show 0.
2. Using and buttons set the programmed password.
   According to the entered password, it is possible to see a part of the parameters listed in the "configuration parameters" section.
   a. Enter "**30**" as password to view all the configuration parameters
   b. Enter "**20**" as password to view the parameters of the "limited access level". At this point, only the parameters with attribute **Liv = A** or **Liv = O** will be editable.
   c. Leave the password blank to edit "user level" parameters, that are identified by attribute **Liv = O**
3. Push the button. If the password is correct the display will show the acronym of the first parameter group preceded by the symbol: . In other words the upper display will show: inP (group of the **Input parameters**).

The instrument is in configuration mode. To press for more than 5 seconds, the instrument will return to the "standard display.

Keyboard functions during parameter changing:

	Operator Mode
	When the upper display is showing a group and the lower display is blank, this key allows to enter in the selected group. When the upper display is showing a parameter and the lower display is showing its value, this key allows to store the selected value for the current parameter and access the next parameter within the same group.
	Allows to increase the value of the selected parameter.
	Allows to decrease the value of the selected parameter.
	Short presses allow you to exit the current group of parameters and select a new group. A long press terminates the configuration procedure (the instrument returns to the normal display).
+	These two keys allow to return to the previous group. Proceed as follows: Push the button and maintaining the pressure, then push the ; release both the buttons.

Configuration Parameters

inP GROUP - input confiuration					
Liv	**N°**	**Param**	**Description**	**Values**	**Default**
A	1	SEnS	Input type	Pt1 = RTD Pt100 Pt10 = RTD Pt1000 0.20 = 0..20mA 4.20 = 4..20mA Pressure probe 0.10 = 0..10V 2.10 = 2..10V crAL= Thermocouple K	Depends on the probe
A	2	dp	Decimal point position	0... 3	See page 7
A	3	SSc	Initial scale read-out for linear inputs (avaiable only if SEnS parameter is not equal to Pt1, Pt10, crAL values)	-1999... 9999	0
C	4	FSc	Full scale read-out for linear input inputs (avaiable only if SEnS parameter is not equal to Pt1, Pt10, crAL values)	-1999... 9999	Depends on the probe
C	5	unit	Unit of measure (present only in the case of temperature probe)	°C/°F	°C
C	6	Fil	Digital filter on the measured value	0 (= OFF)... 20.0 s	1.0
C	7	inE	Selection of the Sensor Out of Range type that will enable the safety output value	or = Over range ou = Under range our = over e under range	or

C	8	oPE	Safety output value	-100... 100	0
C	9	io4.F	I/O4 function selection	on = Out4 will be ever ON (used as a transmitter power supply) ,out4 = Uscita 4 (Used as digital output 4), dG2c = Digital input 2 for contact closure, dG2U = Digital input 2 driven by 12... 24 VDC	on
C	10	diF1	Digital input 1 function	oFF = Not used, 1 = Alarm reset, 2 = Alarm acknowledge (ACK), 3 = Hold of the measured value, 4 = Stand by mode, 5 = Manual mode, 6 = HEAt with SP1 and CooL with SP2, 7 = Timer RUN/Hold/Reset, 8 = Timer Run, 9 = Timer Reset, 10 = Timer Run/Hold, 11 = Timer Run/Reset, 12 = Timer Run/Reset with lock, 13 = Program Start, 14 = Program Reset, 15 = Program Hold, 16 = Program Run/Hold, 17 = Program Run/Reset, 18 = Sequential SP selection, 19 = SP1 - SP2 selection, 20 = SP1... SP4 binary selection, 21 = Digital inputs in parallel	19
C	12	di.A	Digital Inputs Action (DI2 only if configured)	0 = DI1 direct action, DI2 direct action 1 = DI1 reverse action, DI2 direct action 2 = DI1 direct action, DI2 reverse action 3 = DI1 reverse action, DI2 reverse action	0

Out GROUP- Output parameters					
Liv	**N°**	**Param**	**Description**	**Values**	**Default**
C	14	o1F	Out 1 function	AL = Alarm output	AL
C	15	o1AL	Initial scale value of the analog retransmission	-1999 ... Ao1H	1
C	18	o1Ac	Out 1 action	dir = Direct action rEU = Reverse action dir.r = Direct with reversed LED ReU.r = Reverse with reversed LED	rEUr.r
C	19	o2F	Out 2 function	H.rEG = Heating output	H.rEG
C	21	o2Ac	Out 2 action	dir = Direct action rEU = Reverse action dir.r = Direct with reversed LED ReU.r = Reverse with reversed LED	dir
C	22	o3F	Out 3 function	H.rEG = Heating output	H.rEG
C	24	o3Ac	Out 3 action	dir = Direct action rEU = Reverse action dir.r = Direct with reversed LED ReU.r = Reverse with reversed LED	dir

AL1 GROUP - Alarm 1 parameters					
Liv	**N°**	**Param**	**Descrizione**	**Values**	**Default**
C	28	AL1t	Tipo allarme AL1	nonE = Alarm not used LoAb = Absolute low alarm HiAb = Absolute high alarm LHAo = Windows alarm in alarm outside the windows LHAI = Windows alarm in alarm inside the	HidE

				windows SE.br = Sensor Break LodE = Deviation low alarm (relative) HidE = Deviation high alarm (relative) LHdo = Relative band alarm in alarm out of the band LHdi = Relative band alarm in alarm inside the band	
C	29	Ab1	Alarm 1 function	0... 15 +1 = Not active at power up +2 = Latched alarm (manual reset) +4 = Acknowledgeable alarm +8 = Relative alarm not active at set point change	0
C	30	AL1L	-- For High and low alarms, it is the low limit of the AL1 threshold; -- For band alarm, it is low alarm threshold	-1999... AL1H (E.U.)	-199.9
C	31	AL1H	-- For High and low alarms, it is the high limit of the AL1 threshold; -- For band alarm, it is high alarm threshold	AL1L... 9999 (E.U.)	999.9
O	32	AL1	AL1 threshold	AL1L... AL1H (E.U.)	See page 7
O	33	HAL1	AL1 hysteresis	1... 9999 (E.U.)	See page 7
C	34	AL1d	AL1 delay	0 (oFF)... 9999 (s)	oFF
C	35	AL1o	Alarm 1 enabling during Stand-by mode and out of range conditions	0 = Alarm 1 disabled during Stand by and out of range 1 = Alarm 1 enabled in stand by mode 2 = Alarm 1 enabled in out of range condition 3 = Alarm 1 enabled in stand by mode and in overrange condition	1

GRUPPO AL2 - parametri allarme 2					
Liv	**N°**	**Param**	**Description**	**Values**	**Default**
C	36	AL2t	Alarm 2 type	nonE = Alarm not used LoAb = Absolute low alarm HiAb = Absolute high alarm LHAo = Windows alarm in alarm outside the windows LHAI = Windows alarm in alarm inside the windows SE.br = Sensor Break LodE = Deviation low alarm (relative) HidE = Deviation high alarm (relative) LHdo = Relative band alarm in alarm out of the band LHdi = Relative band alarm in alarm inside the band	SE.br
C	37	Ab2	Alarm 2 function	0... 15 +1 = Not active at power up +2 = Latched alarm (manual reset) +4 = Acknowledgeable alarm +8 = Relative alarm not active at set point change	0
C	42	AL2d	AL2 hysteresis	0 (oFF)... 9999 (s)	oFF
C	43	AL2o	Alarm 2 enabling during Stand-by mode and out of range conditions	0 = Alarm 2 disabled during Stand by and out of range 1 = Alarm 2 enabled in stand by mode 2 = Alarm 2 enabled in out of range condition 3 = Alarm 2 enabled in stand by mode and in overrange condition	0

AL3 Group - alarm 3 parameters					
Liv	**N°**	**Param**	**Description**	**Values**	**Default**
	44	AL3t	Alarm 3 type	nonE = Alarm not used LoAb = Absolute low alarm HiAb = Absolute high alarm LHAo = Windows alarm in alarm outside the windows LHAI = Windows alarm in alarm inside the windows SE.br = Sensor Break LodE = Deviation low alarm (relative) HidE = Deviation high alarm (relative) LHdo = Relative band alarm in alarm out of the band LHdi = Relative band alarm in alarm inside the band	nonE

LbA Group - Loop break alarm					
Liv	**N°**	**Param**	**Descrizione**	**Values**	**Default**
C	52	LbAt	LBA time	Da 0 (oFF) a 9999 (s)	oFF

rEG Group - Control parameters					
Liv	**N°**	**Param**	**Description**	**Values**	**Default**
C	56	cont	Control type	Pid = PID (heat and/or) On.FA = ON/OFF asymmetric hysteresis On.FS = ON/OFF symmetric hysteresis nr = Heat/Cool ON/OFF control with neutral zone 3Pt = Servomotor control (available only when Output 2 and Output 3 have been ordered as “M”)	3pt
C	57	Auto	Autotuning selection	-4 = Oscillating auto-tune with automaticrestart at power up and after all point change -3 = Oscillating auto-tune with manual start -2 = Oscillating -tune with auto-matic start at the first power up only -1 = Oscillating auto-tune with auto-matic restart at every power up 0 = Not used 1 = Fast auto tuning with automatic restart at every power up 2 = Fast auto-tune with automatic start the first power up only 3 = FAST auto-tune with manual start 4 = FAST auto-tune with automatic restart at power up and after set point change 5 = Evo-tune with automatic restart at every power up 6 = Evo-tune with automatic start the first power up only 7 = Evo-tune with manual start 8 = Evo-tune with automatic restart at power up and after a set point change	7
C	58	tunE	Manual start of the Autotuning	oFF = Not active on = Active	oFF

C	59	SELF	Self tuning enabling	no = The instrument does not perform the self-tuning YES = The instrument is performing the self-tuning	No
A	62	Pb	Proportional band	1... 9999 (E.U.)	See page 7
A	63	ti	Integral time	0 (oFF) ... 9999 (s)	See page 7
A	64	td	Derivative time	0 (oFF) ... 9999 (s)	See page 7
C	65	Fuoc	Fuzzy overshoot control	0.00... 2.00	1
C	69	rS	Manual reset (Integral pre-load)	-100.0... +100.0 (%)	0.0
A	70	Str.t	Servomotor stroke time	5...1000 seconds	See page 7
A	71	db.S	Servomotor dead band	0...100%	5
C	72	od	Delay at power up	0.00 (oFF) ... 99.59 (hh.mm)	oFF

SP Group - Set point parameters

Liv	N°	Param	Description	Values	Default
C	76	nSP	Number of used set points	1... 4	2
A	77	SPLL	Minimum set point value	-1999 ... SPHL	See page 7
A	78	SPHL	Maximum set point value	SPLL ... 9999	See page 7
O	79	SP	Set point 1	SPLL ... SPLH	See page 7
C	80	SP 2	Set point 2	SPLL ... SPLH	60
	83	A.SP	Selection of the active set point	"SP" ... " nSP"	SP
C	84	SP.rt	Remote set point type	RSP = The value coming from serial link is used as remote set point trin = The value will be added to the local set point selected by A.SP and the sum becomes the operative set point PErc = The value will be scaled on the input range and this value will be used as remote SP	trin
C	85	SPLr	Local/remote set point selection	Loc = Local rEn = Remote	Loc
C	86	SP.u	Rate of rise for POSITIVE set point change (ramp UP)	0.01... 99.99 (inF) Eng. units per minute	inF
C	87	SP.d	Rate of rise for NEGATIVE set point change (ramp DOWN)	0.01... 99.99 (inF) Eng. units per minute	inF

PAn Group - Operator HMI

Liv	N°	Param	Description	Values	Default
C	118	PAS2	Level 2 password (limited access level)	oFF (Level 2 not protected by password) 1... 200	20
C	119	PAS3	Level 3 password (complete configuration level)	3... 300	30
C	120	PAS4	Password livello (livello configurazione a codice)	201... 400	300
C	121	uSrb	button function during RUN TIME	nonE = No function tunE = Auto-tune/self-tune enabling. A single press (longer than 1 second) starts the auto-tune oPLo = Manual mode. The first pressure puts the instrument in manual mode (OPLO) while a second one puts the instrument in Auto mode	tunE

				AAc = Alarm reset ASi = Alarm acknowledge chSP = Sequential set point selection St.by = Stand by mode. The first press puts the instrument in stand by mode while a second one puts the instrument in Auto mode. Str.t = Timer run/hold/reset P.run = Program run P.rES = Program reset P.r.H.r = Program run/hold/reset	
C	122	diSP	Display management	Spo = Operative set point	SPo
C	123	di.cL	Display colour	0 = The display colour is used to show the actual deviation (PV - SP) 1 = Display red (fix) 2 = Display green (fix) 3 = Display orange (fix)	2
	125	diS.t	Display Timeout	-- oFF (display always ON) -- 0.1... 99.59 (mm.ss)	oFF
C	126	fiLd	Filter on the displayed value	-- oFF (filter disabled) -- From 0.0 (oFF) to 20.0 (E.U.)	oFF
C	128	dSPu	Instrument status at power ON	AS.Pr = Starts in the same way it was prior to the power down Auto = Starts in Auto mode oP.0 = Starts in manual mode with a power output equal to zero St.bY = Starts in stand-by mode	Auto
C	129	oPr.E	Operative modes enabling	ALL = All modes will be selectable by the next parameter Au.oP = Auto and manual (OPLO) mode only will be selectable by the next parameter Au.Sb = Auto and Stand-by modes only will be selectable by the next parameter	ALL
C	130	oPEr	Operative mode selection	If oPr.E = ALL: - Auto = Auto mode - oPLo = Manual mode - St.bY = Stand by mode If oPr.E = Au.oP: - Auto = Auto mode - oPLo = Manual mode If oPr.E = Au.Sb: - Auto = Auto mode - St.bY = Stand by mode	Auto

SEr Group - Serial link parameter					
Liv	**N°**	**Param**	**Description**	**Values**	**Default**
C	131	Add	Instrument address	-- oFF -- 1... 254	1
C	132	bAud	baud rate	1200 = 1200 baud 2400 = 2400 baud 9600 = 9600 baud 19.2 = 19200 baud 38.4 = 38400 baud	9600
C	133	trSP	Selection of the value to be retransmitted (Master)	nonE = Retransmission not used (the instrument is a slave) rSP = The instrument becomes a Master and retransmits the operative set point PErc = The instrument become a Master and it retransmits the power output	nonE

con Group - Consumption parameters					
Liv	**N°**	**Param**	**Description**	**Values**	**Default**
C	134	Co.tY	Count type	oFF = Not used 1 = Instantaneous power (kW) 2 = Power consumption (kW/h) 3 = Energy used during program execution. This measure starts from zero when a program runs end stops at the end of the program. A new program execution will reset the value 4 = Total worked days: number of hours the instrument is turned ON divided by 24. 5 = Total worked hours: number of hours the instrument is turned ON. 6 = Total worked days with threshold: number of hours the instrument is turned ON divided by 24, the controller is forced in stand-by when Co.ty value reaches the threshold set in [137] h.Job. 7 = Total worked hours with threshold: number of hours the instrument is turned ON, the controller is forced in stand-by when Co.ty value reaches the threshold set in [137] h.Job. 8 = Totalizer of control relay worked days: number of hours the control relay has been in ON condition, divided by 24. 9 = Totalizer of control relay worked hours: number of hours the control relay has been in ON condition. 10 = Totalizer of control relay worked days with threshold: number of hours the control relay has been in ON condition divided by 24, the controller is forced in stand-by when Co.ty value reaches the threshold set in [137] h.Job. 11 = Totalizer of control relay worked hours with threshold: number of hours the control relay has been in ON condition, the controller is forced in stand-by when Co.ty value reaches the threshold set in [137] h.Job.	oFF
C	138	t.Job	Worked time (not resettable)	0... 9999 days	0

cAL Group - User calibration group					
Liv	**N°**	**Param**	**Description**	**Values**	**Default**
C	139	AL.P	Adjust Low Point	From -1999 to (AH.P - 10) in engineering units	0
C	140	AL.o	Adjust Low Offset	-300... +300 (E.U.)	0
C	141	AH.P	Adjust High Point	From (AL.P + 10) to 9999 engineering units	999.9
C	142	AH.o	Adjust High Offset	-300... +300	0

OPERATIVE MODES

When the instrument is powered, it starts immediately to work according to the parameters values loaded in its memory. The instrument behaviour and its performance are governed by the value of the stored parameters.

At power ON the instrument can start in one of the following mode depending on its configuration:

Automatic Mode In Automatic mode the instrument drives automatically the control output according to the parameter value set and the set point/measured value.

Manual Mode (OPLO): In Manual mode the the upper display shows the measured value while the lower display shows the power output The lower display shows the power output [preceded by H (for heating) or C (for cooling)], MAN is lit and the instrument allows you to set manually the control output power. No Automatic action will be made.

Stand by Mode (St.bY): In stand-by mode the instrument operates as an indicator. It will show on the upper display the measured value and on the lower display the set point alternately to the “St.bY” messages and forces the control outputs to zero.

We define all the above described conditions as “Standard Display”.

As we have seen, it is always possible to modify the value assigned to a parameter independently from the operative modes selected.

AUTOMATIC MODE

Keyboard function when the instrument is in Auto mode:

	Modo Operatore
	Allows entry into parameter modification procedures
	Allows you to start the “Direct set point modification” function (see below).
	Allows you to display the “additional informations” (see below).
	Performs the action programmed by [121] uSrb (button function during RUN TIME) parameter

Additional information
This instrument is able to show you some additional informations that can help you to manage your system.
The additional informations are related to how the instrument is programmed, hence in many cases, only part of this information is available.

1. When the instrument is showing the “standard display” push button. The lower display will show H or c followed by a number. This value is the current power output applied to the process. The H show you that the action is a Heating action while the "c" show you that the action is a Cooling action
2. Push button again. When the programmer is running the lower display will show the segment currently performed and the Event status as shown below:
   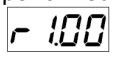 where the first character can be r for a ramp or S for a soak, the next digit show the number of the segment (e.g. S3 means Soak number 3) and the twoless significant digits (LSD) show you the status of the two event (the LSD is the Event 2)..
3. Push button again. When the programmer is running the lower display will show the theoretical remaining time to the end of the program preceded by a "P" letter:
   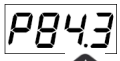
4. Push button again. When the wattmeter function is running the lower display will show U followed by the measured energy..
5. Push button. When the “Worked time count” is running the lower display will show "d" for days or "h" for hours followed by the measured time.
6. Push button. The instrument returns to the "standard display".

Note: The additional information visualization is subject to a time out. If no button is pressed for more than 10 second the instrument comes automatically back to the Standard display..

Direct set point modification
This function allows to modify rapidly the set point value selected by [83] A.SP (selection of the active Set point) or to the set point of the segment group (of the programmer) currently in progress.

1. Push button. The upper display shows the acronym of the selected set point (e.g. SP2) and the lower display will show its value.
2. By and buttons, assign to this parameter the desired value
3. Do not push any button for more than 5 second or push the button. In both cases the instrument memorize the new value and come back to the “standard display”.

Manual mode

This operative mode allows you to deactivate automatic control and manually program the percentage power output to the process. When the instrument is in manual mode, the upper display shows the measured value while the lower display shows the power output [preceded by H (for heating action) or C (for cooling action)] The MAN LED is lit. When manual control is selected, the instrument will start to operate with the same power output as the last one supplied by automatic mode and can be modified using the and buttons.

In case of ON/OFF control, 0% corresponds to the deactivated output while any value different from 0 corresponds to the activated output. As in the case of visualization, the programmable values range from H100 (100% output power with reverse action) to C100 (100% output power with direct action).

Notes:

- During manual mode, the alarms are operative.
- If you set manual modes during program execution, the program will be frozen and it will restart when the instrument will come back to Auto mode.
- If you set manual modes during self-tune execution, the self- tune function will be aborted.
- During manual mode, all functions not related with the control (wattmeter, independent timer, “worked time”, etc) continue to operate normally..

STAND-BY MODE

This operative mode also deactivates the automatic control but forces the control output to zero. In this mode the instrument operates as an indicator. When the instrument is in stand by mode the upper display will show the measured value while the lower display will show alternately the set point and the message “St.bY”.

Notes:

- During stand by mode, the relative alarms are disabled while the absolute alarms are operative or not according to the ALxo (Alarm x enabling during Stand-by mode) parameter setting.
- If you set stand by mode during program execution, the program will be aborted.
- If you set stand by mode during self-tune execution, the self- tune function will be aborted.
- During stand by mode, all functions not related with the control (wattmeter, independent timer, “worked time”, etc) continue to operate normally.
- When the instrument is swapped from stand by to auto modes, the instrument will start automatically the alarm masking, the soft start functions and the auto-tune (if programmed).

AUTOTUNE (EVOTUNE)

Evotune is a fast and fully automatic procedure that can be started in any condition, regardless the deviation from SP. The controller selects automatically the best tune method and computes the optimum PID parameters. To activate Evotune press button for 3 seconds.

ERROR MESSAGES

The upper display shows the OVER-RANGE and UNDERRANGE conditions with the following indications:

Over-range:

Under-range

The sensor break will be signalled as an out of range:

Note: When an over-range or an under-range is detected, the alarms operate as in presence of the maximum or the minimum measurable value respectively.

To check the out of span Error condition, proceed as follows:

1. Check the input signal source and the connecting line.
2. Make sure that the input signal is in accordance with the instrument configuration. Otherwise, modify the input configuration.
3. If no error is detected, send the instrument to your supplier to be checked.

List of possible errors

ErAT Fast Auto-tune cannot start. The measure value is tooclose to the set point. Push the button in order to delete the error message.

ouLd Overload on the out 4. The messages shows that a short circuit is present on the Out 4 when it is used as output or as a transmitter power suply. When the short circuit disappears the output restart to operate..

NoAt Auto-tune not finished within 12 hours.

ErEP Possible problem of the instrument memory. The messages disappears automatically. When the error continues, send the instrument to your supplier.

RonE Possible problem of the firmware memory. When this error is detected, send the instrument to your supplier.

Errt Possible problem of the calibration memory. When this error is detected, send the instrument to your supplier.

FACTORY RESET

Sometime, e.g. when you re-configure an instrument previously used for other works or from other people or when you have made too many errors during configuration and you decided to re-configure the instrument, it is possible to restore the factory configuration. This action allows to put the instrument in a defined condition (the same it was at the first power ON).

The default data are those typical values loaded in the instrument prior to ship it from factory. To load the factory default parameter set, proceed as follows:

1. Press the ↵ button for more than 5 seconds. The upper display will show PASS while the lower display shows 0;
2. Using ▲ and ▼ buttons set the value -481;
3. Push ↵ button;
4. The instrument will turn OFF all LEDs for a few seconds, then the upper display will show dFLt (default) and then all LEDs are turned ON for 2 seconds. At this point the instrument restarts as for a new power ON.

The procedure is complete.

Note: The complete list of the default parameters is available in Chapter "Configuration".

KM3 Modulator

USER MANUAL

M12927CA Rel.1.0 10/2020

MOUNTING

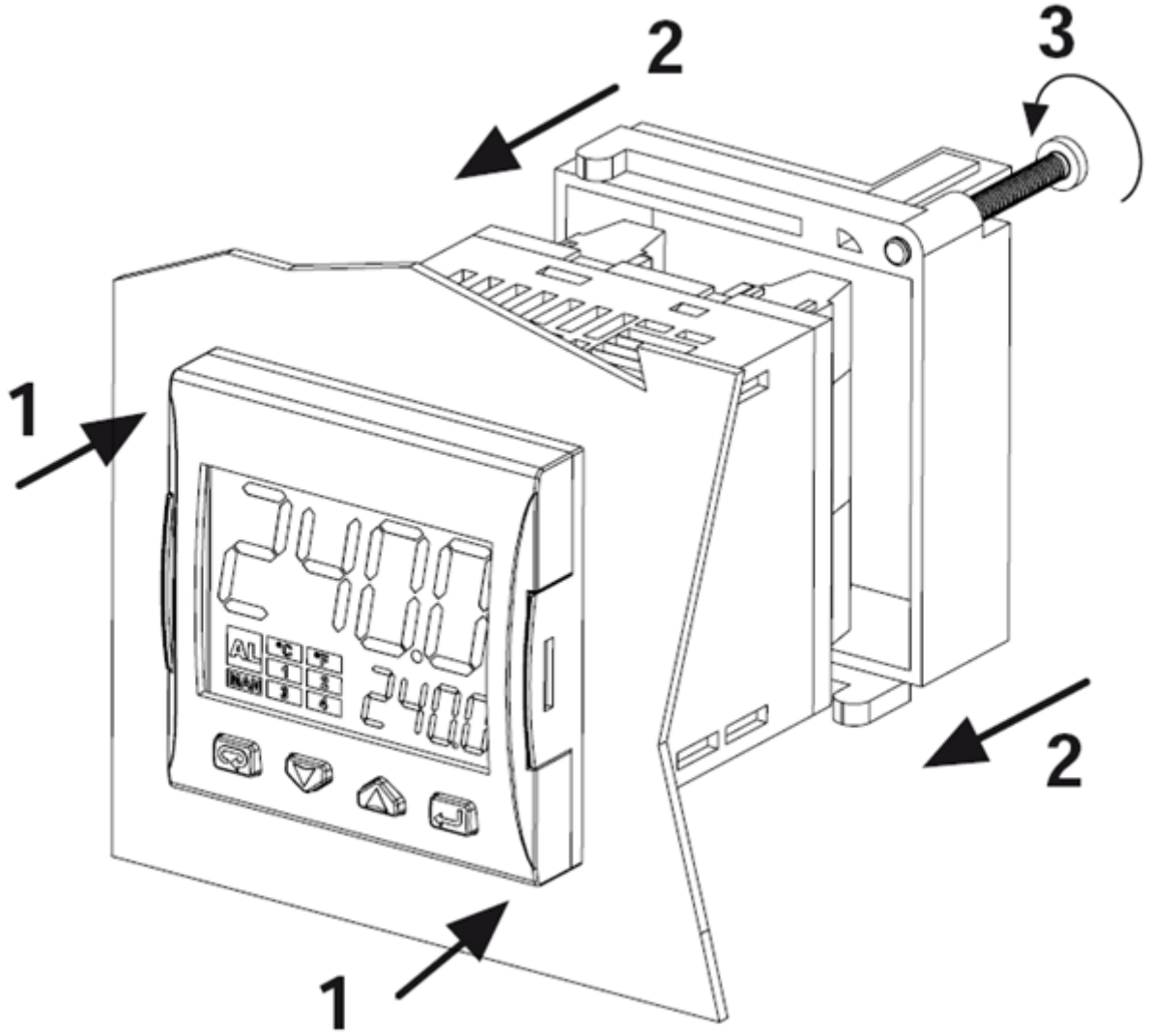

DISPLAY AND KEYS

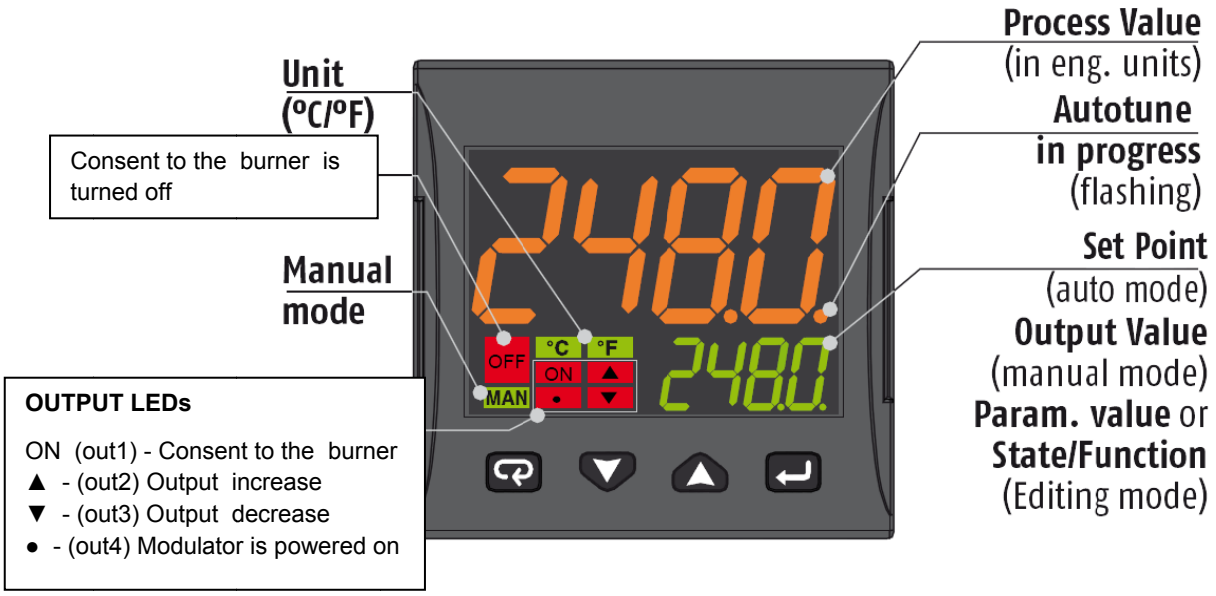

	Operator Mode	Editing Mode
	Access to: - Operator Commands (Timer, Setpoint selection ...) - Parameters - Configuration	Confirm and go to Next parameter
	Access to: - Operator additional information (Output value, running time ...)	Increase the displayed value or select the next element of the parameters list
	Access to: - Set Point	Decrease the displayed value or select the previous element
	Programmable key: Start the programmed function (Autotune, Auto/Man, Timer ...)	Exit from Operator commands/Parameter setting/Configuration

CONNECTIONS DIAGRAM

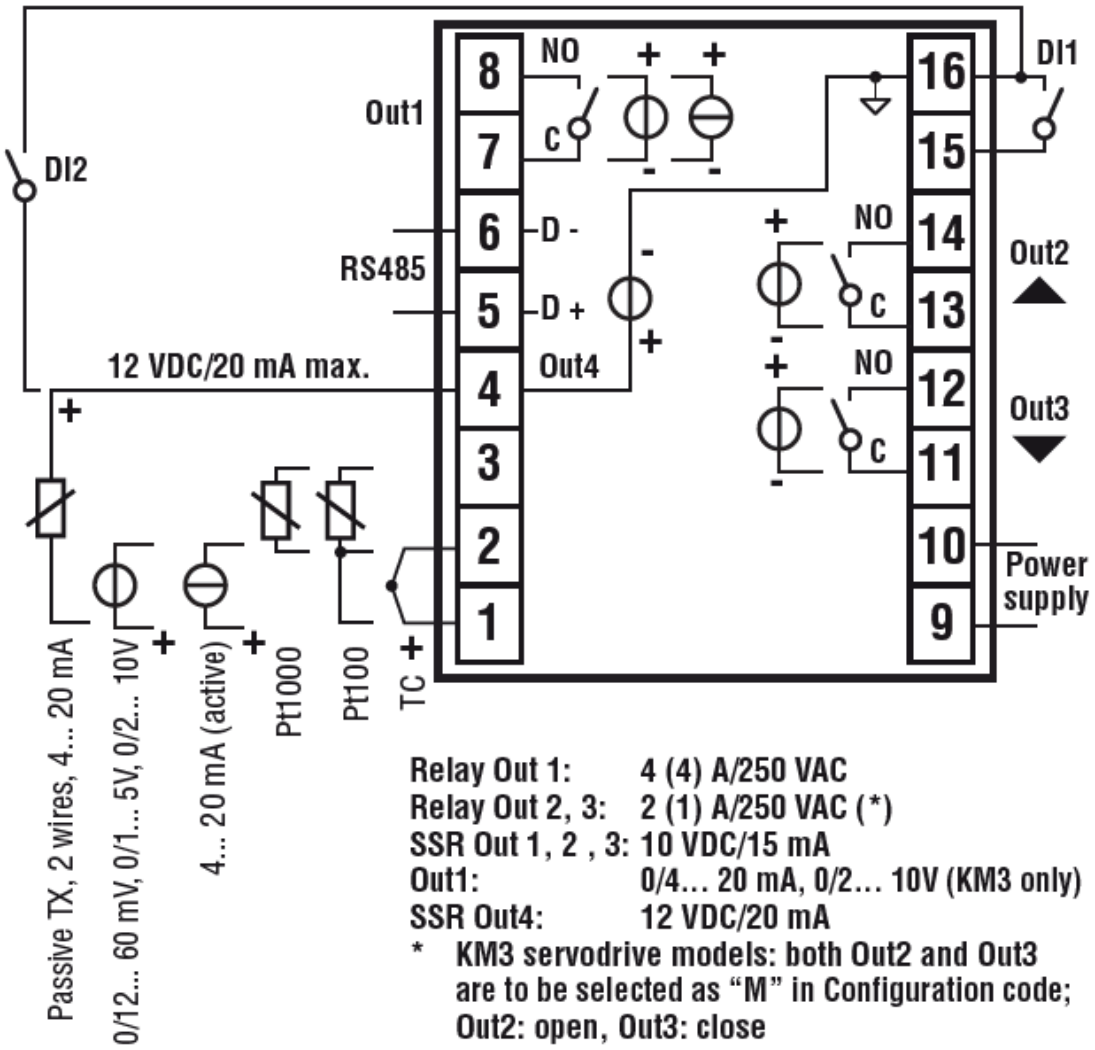

Probe connection:

- **PT1000/NTC/PTC**: between terminal 3 and 2
- **PT 100**: between terminal 3 and 2 with terminal 1
- **Passive pressure probe** 0/4-20 mA: between terminal 4 (+) e 1 (-)
  Note: out4 must be activated (IO4F must be setted to ON)
- **Powered pressure probe** 0/4-20 mA between terminal 4 (power supply), 2 (negative) e 1 (positive)
  Note: set IO4F to ON to activate Out4

Power supply connection:

- **Neutral wire:** terminal 9
- **Phase:** terminal 10 (100…240 Vac)
- Close terminals 15-16 to switch to the set point 2

Output connection:

- **Channel 1:** terminal 7 and 8 (burner on – off)
- **Channel 2:** terminal 11 and 12 (servomotor opens)
- **Channel 3:** terminal 13 and 14 (servomotor closes)

SETPOINT AND HYSTERESIS CONFIGURATION (SP, AL1, HAL1 parameters)

Push the ↵ button to enter into the setpoint configuration:

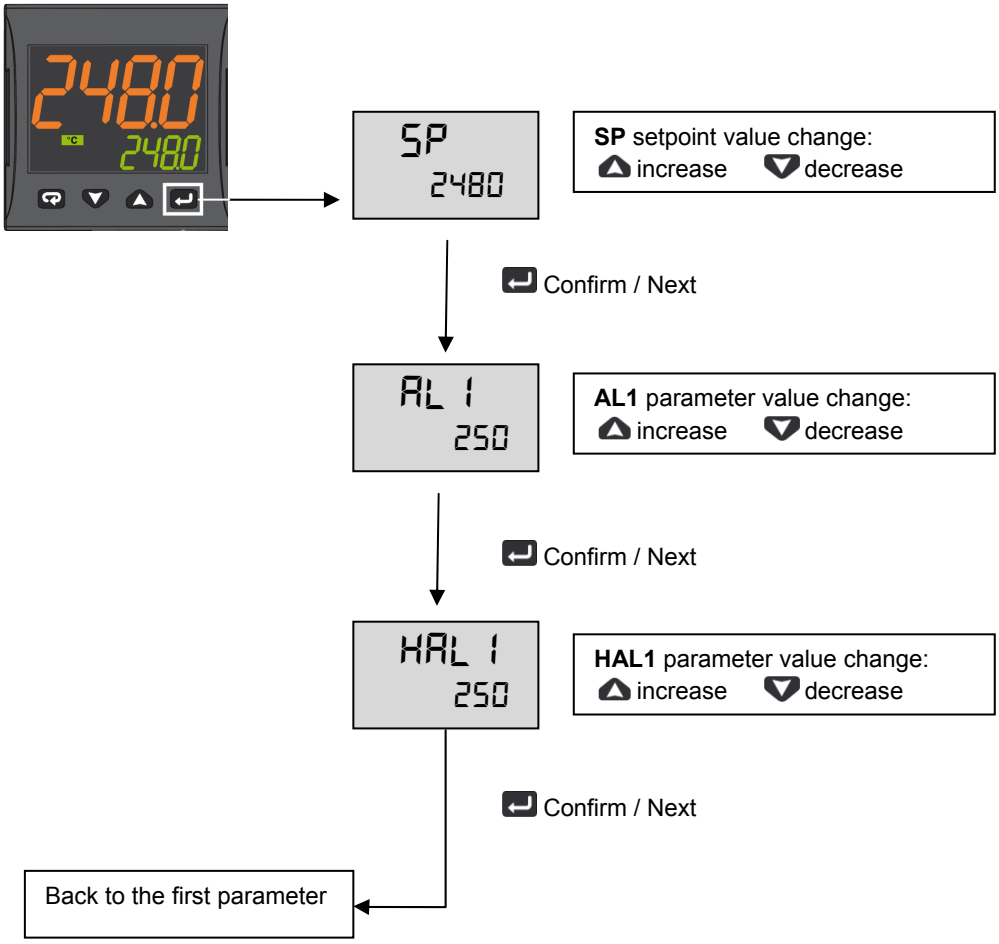

To return to normal mode, press the ↩ key for 3 seconds or wait the 10s timeout

Operation example

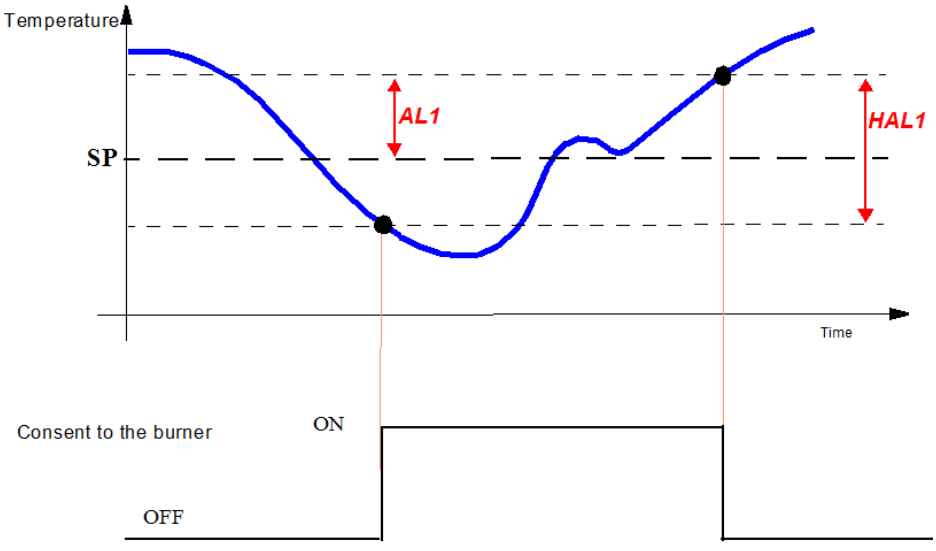

LIMITED ACCESS LEVEL

Proceed as follows to change some parameters that are not visible in standard user mode:

Press the ↵ key for 3 seconds

Password = 20

Access to parameter:

▲	Increase the displayed value
▼	Decrease the displayed value
↵	Confirm and go to next parameter

Param	Description	Values	Default
SEnS	Input type	Pt1 = RTD Pt100 Pt10 = RTD Pt1000 0.20 = 0..20mA 4.20 = 4..20mA Pressure probe 0.10 = 0..10V 2.10 = 2..10V crAL= Thermocouple K	Depends on the probe
SP	Set point 1	SPLL ... SPLH	See page 7
AL1	AL1 threshold	AL1L... AL1H (E.U.)	
HAL1	AL1 hysteresis	1... 9999 (E.U.)	
Pb	Proportional band	1... 9999 (E.U.)	
ti	Integral time	0 (oFF) ... 9999 (s)	
td	Derivative time	0 (oFF) ... 9999 (s)	
Str.t	Servomotor stroke time	5...1000 seconds	
db.S	Servomotor dead band	0...100%	
SPLL	Minimum set point value	-1999 ... SPHL	
SPHL	Maximum set point value	SPLL ... 9999	
dp	Decimal point position	0... 3	
SP 2	Set point 2	SPLL...SPLH	60
A.SP	Selection of the active set point	"SP" ... " nSP"	SP

To exit the parameter setting procedure press the ↩ key (for 3 s) or wait until the timeout expiration (about 30 seconds)

Probe parameters configuration MODULATORE ASCON KM3

Parameter Group	**inP**						**AL1**		**rEG**					**SP**		
Parameter	**Sens**	**dp**	**SSC**	**FSc**	**unit**	**IO4.F (**)**	**AL1 (***)**	**HAL1 (***)**	**Pb (***)**	**ti (***)**	**td (***)**	**Str.t**	**db.S**	**SPLL**	**SPHL**	**SP (***)**
Probes		Dec Point	Scale Min	Scale Max			Off	On	p	i	d	servo time s	Band Mo.	SP Min	SP Max	Set point
Pt1000 (130°C max)	Pt10	1			°C	on	5	10	10	350	1	*	5	30	95	80
Pt1000 (350°C max)	PT10	1			°C	on	10	10	10	350	1	*	5	0	350	80
Pt100 (130°C max)	PT1	1			°C	on	5	10	10	350	1	*	5	0	95	80
Pt100 (350°C max)	Pt1	1			°C	on	10	10	10	350	1	*	5	0	350	80
Pt100 (0÷100°C 4÷20mA)	4.20	1	0	100		on	5	10	10	350	1	*	5	0	95	80
Thermocouple K (1200°C max)	crAL	0			°C	on	20	25	10	350	1	*	5	0	1200	80
Thermocouple J (1000°C max)	J	0			°C	on	20	25	10	350	1	*	5	0	1000	80
4-20mA / 0-1,6barPressure probe	4.20	0	0	160		on	20	20	5	120	1	*	5	0	160	100
4-20mA / 0-10bar Pressure probe	4.20	0	0	1000		on	50	50	5	120	1	*	5	0	1000	600
4-20mA / 0-16bar Pressure probe	4.20	0	0	1600		on	80	80	5	120	1	*	5	0	1600	600
4-20mA / 0-25bar Pressure probe	4.20	0	0	2500		on	125	125	5	120	1	*	5	0	2500	600
4-20mA / 0-40bar Pressure probe	4.20	0	0	4000		on	200	200	5	120	1	*	5	0	4000	600
QBE2002 / 0-25bar Pressure probe	0.10	0	0	2500		0n	125	125	5	120	1	*	5	0	2500	600

Note:

(*) Str.t - Servomotor stroke time
SQL33; STM30; SQM10; SQM40; SQM50; SQM54 = 30 (Seconds)
STA12B3.41; SQN30.251; SQN72.4A4A20 = 12 (Seconds)

(**) Out 4 … on Display led °4 must be switched on, otherwise change the io4.F parameter value from "on" to "out4", confirm the value, quit the configuration mode then change again the io4.F parameter value from "out4" to "on".

(***) Factory settings. These values must be adapted to machine conditions

N.B. For pressure probe, SP, SPHL, SPLL parameters values are expressed in Kpa (1 bar = 100 Kpa).

CONFIGURATION

How to access configuration level

The configuration parameters are collected in various groups. Every group defines all parameters related with a specific function (e.g.: control, alarms, output functions).

1. Push the button for more than 5 seconds. The upper display will show PASS while the lower display will show 0.
2. Using and buttons set the programmed password.
   According to the entered password, it is possible to see a part of the parameters listed in the "configuration parameters" section.
   a. Enter "**30**" as password to view all the configuration parameters
   b. Enter "**20**" as password to view the parameters of the "limited access level". At this point, only the parameters with attribute **Liv = A** or **Liv = O** will be editable.
   c. Leave the password blank to edit "user level" parameters, that are identified by attribute **Liv = O**
3. Push the button. If the password is correct the display will show the acronym of the first parameter group preceded by the symbol: . In other words the upper display will show: inP (group of the **Input parameters**).

The instrument is in configuration mode. To press for more than 5 seconds, the instrument will return to the "standard display.

Keyboard functions during parameter changing:

	Operator Mode
	When the upper display is showing a group and the lower display is blank, this key allows to enter in the selected group. When the upper display is showing a parameter and the lower display is showing its value, this key allows to store the selected value for the current parameter and access the next parameter within the same group.
	Allows to increase the value of the selected parameter.
	Allows to decrease the value of the selected parameter.
	Short presses allow you to exit the current group of parameters and select a new group. A long press terminates the configuration procedure (the instrument returns to the normal display).
+	These two keys allow to return to the previous group. Proceed as follows: Push the button and maintaining the pressure, then push the ; release both the buttons.

Configuration Parameters

inP GROUP - input confiuration					
Liv	**N°**	**Param**	**Description**	**Values**	**Default**
A	1	SEnS	Input type	Pt1 = RTD Pt100 Pt10 = RTD Pt1000 0.20 = 0..20mA 4.20 = 4..20mA Pressure probe 0.10 = 0..10V 2.10 = 2..10V crAL= Thermocouple K	Depends on the probe
A	2	dp	Decimal point position	0... 3	See page 7
A	3	SSc	Initial scale read-out for linear inputs (avaiable only if SEnS parameter is not equal to Pt1, Pt10, crAL values)	-1999... 9999	0
C	4	FSc	Full scale read-out for linear input inputs (avaiable only if SEnS parameter is not equal to Pt1, Pt10, crAL values)	-1999... 9999	Depends on the probe
C	5	unit	Unit of measure (present only in the case of temperature probe)	°C/°F	°C
C	6	Fil	Digital filter on the measured value	0 (= OFF)... 20.0 s	1.0
C	7	inE	Selection of the Sensor Out of Range type that will enable the safety output value	or = Over range ou = Under range our = over e under range	or

C	8	oPE	Safety output value	-100... 100	0
C	9	io4.F	I/O4 function selection	on = Out4 will be ever ON (used as a transmitter power supply) ,out4 = Uscita 4 (Used as digital output 4), dG2c = Digital input 2 for contact closure, dG2U = Digital input 2 driven by 12... 24 VDC	on
C	10	diF1	Digital input 1 function	oFF = Not used, 1 = Alarm reset, 2 = Alarm acknowledge (ACK), 3 = Hold of the measured value, 4 = Stand by mode, 5 = Manual mode, 6 = HEAt with SP1 and CooL with SP2, 7 = Timer RUN/Hold/Reset, 8 = Timer Run, 9 = Timer Reset, 10 = Timer Run/Hold, 11 = Timer Run/Reset, 12 = Timer Run/Reset with lock, 13 = Program Start, 14 = Program Reset, 15 = Program Hold, 16 = Program Run/Hold, 17 = Program Run/Reset, 18 = Sequential SP selection, 19 = SP1 - SP2 selection, 20 = SP1... SP4 binary selection, 21 = Digital inputs in parallel	19
C	12	di.A	Digital Inputs Action (DI2 only if configured)	0 = DI1 direct action, DI2 direct action 1 = DI1 reverse action, DI2 direct action 2 = DI1 direct action, DI2 reverse action 3 = DI1 reverse action, DI2 reverse action	0

Out GROUP- Output parameters					
Liv	**N°**	**Param**	**Description**	**Values**	**Default**
C	14	o1F	Out 1 function	AL = Alarm output	AL
C	15	o1AL	Initial scale value of the analog retransmission	-1999 ... Ao1H	1
C	18	o1Ac	Out 1 action	dir = Direct action rEU = Reverse action dir.r = Direct with reversed LED ReU.r = Reverse with reversed LED	rEUr.r
C	19	o2F	Out 2 function	H.rEG = Heating output	H.rEG
C	21	o2Ac	Out 2 action	dir = Direct action rEU = Reverse action dir.r = Direct with reversed LED ReU.r = Reverse with reversed LED	dir
C	22	o3F	Out 3 function	H.rEG = Heating output	H.rEG
C	24	o3Ac	Out 3 action	dir = Direct action rEU = Reverse action dir.r = Direct with reversed LED ReU.r = Reverse with reversed LED	dir

AL1 GROUP - Alarm 1 parameters					
Liv	**N°**	**Param**	**Descrizione**	**Values**	**Default**
C	28	AL1t	Tipo allarme AL1	nonE = Alarm not used LoAb = Absolute low alarm HiAb = Absolute high alarm LHAo = Windows alarm in alarm outside the windows LHAI = Windows alarm in alarm inside the	HidE

				windows SE.br = Sensor Break LodE = Deviation low alarm (relative) HidE = Deviation high alarm (relative) LHdo = Relative band alarm in alarm out of the band LHdi = Relative band alarm in alarm inside the band	
C	29	Ab1	Alarm 1 function	0... 15 +1 = Not active at power up +2 = Latched alarm (manual reset) +4 = Acknowledgeable alarm +8 = Relative alarm not active at set point change	0
C	30	AL1L	-- For High and low alarms, it is the low limit of the AL1 threshold; -- For band alarm, it is low alarm threshold	-1999... AL1H (E.U.)	-199.9
C	31	AL1H	-- For High and low alarms, it is the high limit of the AL1 threshold; -- For band alarm, it is high alarm threshold	AL1L... 9999 (E.U.)	999.9
O	32	AL1	AL1 threshold	AL1L... AL1H (E.U.)	See page 7
O	33	HAL1	AL1 hysteresis	1... 9999 (E.U.)	See page 7
C	34	AL1d	AL1 delay	0 (oFF)... 9999 (s)	oFF
C	35	AL1o	Alarm 1 enabling during Stand-by mode and out of range conditions	0 = Alarm 1 disabled during Stand by and out of range 1 = Alarm 1 enabled in stand by mode 2 = Alarm 1 enabled in out of range condition 3 = Alarm 1 enabled in stand by mode and in overrange condition	1

GRUPPO AL2 - parametri allarme 2					
Liv	**N°**	**Param**	**Description**	**Values**	**Default**
C	36	AL2t	Alarm 2 type	nonE = Alarm not used LoAb = Absolute low alarm HiAb = Absolute high alarm LHAo = Windows alarm in alarm outside the windows LHAI = Windows alarm in alarm inside the windows SE.br = Sensor Break LodE = Deviation low alarm (relative) HidE = Deviation high alarm (relative) LHdo = Relative band alarm in alarm out of the band LHdi = Relative band alarm in alarm inside the band	SE.br
C	37	Ab2	Alarm 2 function	0... 15 +1 = Not active at power up +2 = Latched alarm (manual reset) +4 = Acknowledgeable alarm +8 = Relative alarm not active at set point change	0
C	42	AL2d	AL2 hysteresis	0 (oFF)... 9999 (s)	oFF
C	43	AL2o	Alarm 2 enabling during Stand-by mode and out of range conditions	0 = Alarm 2 disabled during Stand by and out of range 1 = Alarm 2 enabled in stand by mode 2 = Alarm 2 enabled in out of range condition 3 = Alarm 2 enabled in stand by mode and in overrange condition	0

AL3 Group - alarm 3 parameters					
Liv	**N°**	**Param**	**Description**	**Values**	**Default**
	44	AL3t	Alarm 3 type	nonE = Alarm not used LoAb = Absolute low alarm HiAb = Absolute high alarm LHAo = Windows alarm in alarm outside the windows LHAI = Windows alarm in alarm inside the windows SE.br = Sensor Break LodE = Deviation low alarm (relative) HidE = Deviation high alarm (relative) LHdo = Relative band alarm in alarm out of the band LHdi = Relative band alarm in alarm inside the band	nonE

LbA Group - Loop break alarm					
Liv	**N°**	**Param**	**Descrizione**	**Values**	**Default**
C	52	LbAt	LBA time	Da 0 (oFF) a 9999 (s)	oFF

rEG Group - Control parameters					
Liv	**N°**	**Param**	**Description**	**Values**	**Default**
C	56	cont	Control type	Pid = PID (heat and/or) On.FA = ON/OFF asymmetric hysteresis On.FS = ON/OFF symmetric hysteresis nr = Heat/Cool ON/OFF control with neutral zone 3Pt = Servomotor control (available only when Output 2 and Output 3 have been ordered as “M”)	3pt
C	57	Auto	Autotuning selection	-4 = Oscillating auto-tune with automaticrestart at power up and after all point change -3 = Oscillating auto-tune with manual start -2 = Oscillating -tune with auto-matic start at the first power up only -1 = Oscillating auto-tune with auto-matic restart at every power up 0 = Not used 1 = Fast auto tuning with automatic restart at every power up 2 = Fast auto-tune with automatic start the first power up only 3 = FAST auto-tune with manual start 4 = FAST auto-tune with automatic restart at power up and after set point change 5 = Evo-tune with automatic restart at every power up 6 = Evo-tune with automatic start the first power up only 7 = Evo-tune with manual start 8 = Evo-tune with automatic restart at power up and after a set point change	7
C	58	tunE	Manual start of the Autotuning	oFF = Not active on = Active	oFF

C	59	SELF	Self tuning enabling	no = The instrument does not perform the self-tuning YES = The instrument is performing the self-tuning	No
A	62	Pb	Proportional band	1... 9999 (E.U.)	See page 7
A	63	ti	Integral time	0 (oFF) ... 9999 (s)	See page 7
A	64	td	Derivative time	0 (oFF) ... 9999 (s)	See page 7
C	65	Fuoc	Fuzzy overshoot control	0.00... 2.00	1
C	69	rS	Manual reset (Integral pre-load)	-100.0... +100.0 (%)	0.0
A	70	Str.t	Servomotor stroke time	5...1000 seconds	See page 7
A	71	db.S	Servomotor dead band	0...100%	5
C	72	od	Delay at power up	0.00 (oFF) ... 99.59 (hh.mm)	oFF

SP Group - Set point parameters

Liv	N°	Param	Description	Values	Default
C	76	nSP	Number of used set points	1... 4	2
A	77	SPLL	Minimum set point value	-1999 ... SPHL	See page 7
A	78	SPHL	Maximum set point value	SPLL ... 9999	See page 7
O	79	SP	Set point 1	SPLL ... SPLH	See page 7
C	80	SP 2	Set point 2	SPLL ... SPLH	60
	83	A.SP	Selection of the active set point	"SP" ... " nSP"	SP
C	84	SP.rt	Remote set point type	RSP = The value coming from serial link is used as remote set point trin = The value will be added to the local set point selected by A.SP and the sum becomes the operative set point PErc = The value will be scaled on the input range and this value will be used as remote SP	trin
C	85	SPLr	Local/remote set point selection	Loc = Local rEn = Remote	Loc
C	86	SP.u	Rate of rise for POSITIVE set point change (ramp UP)	0.01... 99.99 (inF) Eng. units per minute	inF
C	87	SP.d	Rate of rise for NEGATIVE set point change (ramp DOWN)	0.01... 99.99 (inF) Eng. units per minute	inF

PAn Group - Operator HMI

Liv	N°	Param	Description	Values	Default
C	118	PAS2	Level 2 password (limited access level)	oFF (Level 2 not protected by password) 1... 200	20
C	119	PAS3	Level 3 password (complete configuration level)	3... 300	30
C	120	PAS4	Password livello (livello configurazione a codice)	201... 400	300
C	121	uSrb	button function during RUN TIME	nonE = No function tunE = Auto-tune/self-tune enabling. A single press (longer than 1 second) starts the auto-tune oPLo = Manual mode. The first pressure puts the instrument in manual mode (OPLO) while a second one puts the instrument in Auto mode	tunE

				AAc = Alarm reset ASi = Alarm acknowledge chSP = Sequential set point selection St.by = Stand by mode. The first press puts the instrument in stand by mode while a second one puts the instrument in Auto mode. Str.t = Timer run/hold/reset P.run = Program run P.rES = Program reset P.r.H.r = Program run/hold/reset	
C	122	diSP	Display management	Spo = Operative set point	SPo
C	123	di.cL	Display colour	0 = The display colour is used to show the actual deviation (PV - SP) 1 = Display red (fix) 2 = Display green (fix) 3 = Display orange (fix)	2
	125	diS.t	Display Timeout	-- oFF (display always ON) -- 0.1... 99.59 (mm.ss)	oFF
C	126	fiLd	Filter on the displayed value	-- oFF (filter disabled) -- From 0.0 (oFF) to 20.0 (E.U.)	oFF
C	128	dSPu	Instrument status at power ON	AS.Pr = Starts in the same way it was prior to the power down Auto = Starts in Auto mode oP.0 = Starts in manual mode with a power output equal to zero St.bY = Starts in stand-by mode	Auto
C	129	oPr.E	Operative modes enabling	ALL = All modes will be selectable by the next parameter Au.oP = Auto and manual (OPLO) mode only will be selectable by the next parameter Au.Sb = Auto and Stand-by modes only will be selectable by the next parameter	ALL
C	130	oPEr	Operative mode selection	If oPr.E = ALL: - Auto = Auto mode - oPLo = Manual mode - St.bY = Stand by mode If oPr.E = Au.oP: - Auto = Auto mode - oPLo = Manual mode If oPr.E = Au.Sb: - Auto = Auto mode - St.bY = Stand by mode	Auto

SEr Group - Serial link parameter					
Liv	**N°**	**Param**	**Description**	**Values**	**Default**
C	131	Add	Instrument address	-- oFF -- 1... 254	1
C	132	bAud	baud rate	1200 = 1200 baud 2400 = 2400 baud 9600 = 9600 baud 19.2 = 19200 baud 38.4 = 38400 baud	9600
C	133	trSP	Selection of the value to be retransmitted (Master)	nonE = Retransmission not used (the instrument is a slave) rSP = The instrument becomes a Master and retransmits the operative set point PErc = The instrument become a Master and it retransmits the power output	nonE

con Group - Consumption parameters					
Liv	**N°**	**Param**	**Description**	**Values**	**Default**
C	134	Co.tY	Count type	oFF = Not used 1 = Instantaneous power (kW) 2 = Power consumption (kW/h) 3 = Energy used during program execution. This measure starts from zero when a program runs end stops at the end of the program. A new program execution will reset the value 4 = Total worked days: number of hours the instrument is turned ON divided by 24. 5 = Total worked hours: number of hours the instrument is turned ON. 6 = Total worked days with threshold: number of hours the instrument is turned ON divided by 24, the controller is forced in stand-by when Co.ty value reaches the threshold set in [137] h.Job. 7 = Total worked hours with threshold: number of hours the instrument is turned ON, the controller is forced in stand-by when Co.ty value reaches the threshold set in [137] h.Job. 8 = Totalizer of control relay worked days: number of hours the control relay has been in ON condition, divided by 24. 9 = Totalizer of control relay worked hours: number of hours the control relay has been in ON condition. 10 = Totalizer of control relay worked days with threshold: number of hours the control relay has been in ON condition divided by 24, the controller is forced in stand-by when Co.ty value reaches the threshold set in [137] h.Job. 11 = Totalizer of control relay worked hours with threshold: number of hours the control relay has been in ON condition, the controller is forced in stand-by when Co.ty value reaches the threshold set in [137] h.Job.	oFF
C	138	t.Job	Worked time (not resettable)	0... 9999 days	0

cAL Group - User calibration group					
Liv	**N°**	**Param**	**Description**	**Values**	**Default**
C	139	AL.P	Adjust Low Point	From -1999 to (AH.P - 10) in engineering units	0
C	140	AL.o	Adjust Low Offset	-300... +300 (E.U.)	0
C	141	AH.P	Adjust High Point	From (AL.P + 10) to 9999 engineering units	999.9
C	142	AH.o	Adjust High Offset	-300... +300	0

OPERATIVE MODES

When the instrument is powered, it starts immediately to work according to the parameters values loaded in its memory. The instrument behaviour and its performance are governed by the value of the stored parameters.

At power ON the instrument can start in one of the following mode depending on its configuration:

Automatic Mode In Automatic mode the instrument drives automatically the control output according to the parameter value set and the set point/measured value.

Manual Mode (OPLO): In Manual mode the the upper display shows the measured value while the lower display shows the power output The lower display shows the power output [preceded by H (for heating) or C (for cooling)], MAN is lit and the instrument allows you to set manually the control output power. No Automatic action will be made.

Stand by Mode (St.bY): In stand-by mode the instrument operates as an indicator. It will show on the upper display the measured value and on the lower display the set point alternately to the “St.bY” messages and forces the control outputs to zero.

We define all the above described conditions as “Standard Display”.

As we have seen, it is always possible to modify the value assigned to a parameter independently from the operative modes selected.

AUTOMATIC MODE

Keyboard function when the instrument is in Auto mode:

	Modo Operatore
	Allows entry into parameter modification procedures
	Allows you to start the “Direct set point modification” function (see below).
	Allows you to display the “additional informations” (see below).
	Performs the action programmed by [121] uSrb (button function during RUN TIME) parameter

Additional information
This instrument is able to show you some additional informations that can help you to manage your system.
The additional informations are related to how the instrument is programmed, hence in many cases, only part of this information is available.

1. When the instrument is showing the “standard display” push button. The lower display will show H or c followed by a number. This value is the current power output applied to the process. The H show you that the action is a Heating action while the "c" show you that the action is a Cooling action
2. Push button again. When the programmer is running the lower display will show the segment currently performed and the Event status as shown below:
   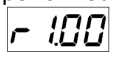 where the first character can be r for a ramp or S for a soak, the next digit show the number of the segment (e.g. S3 means Soak number 3) and the twoless significant digits (LSD) show you the status of the two event (the LSD is the Event 2)..
3. Push button again. When the programmer is running the lower display will show the theoretical remaining time to the end of the program preceded by a "P" letter:
   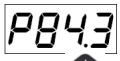
4. Push button again. When the wattmeter function is running the lower display will show U followed by the measured energy..
5. Push button. When the “Worked time count” is running the lower display will show "d" for days or "h" for hours followed by the measured time.
6. Push button. The instrument returns to the "standard display".

Note: The additional information visualization is subject to a time out. If no button is pressed for more than 10 second the instrument comes automatically back to the Standard display..

Direct set point modification
This function allows to modify rapidly the set point value selected by [83] A.SP (selection of the active Set point) or to the set point of the segment group (of the programmer) currently in progress.

1. Push button. The upper display shows the acronym of the selected set point (e.g. SP2) and the lower display will show its value.
2. By and buttons, assign to this parameter the desired value
3. Do not push any button for more than 5 second or push the button. In both cases the instrument memorize the new value and come back to the “standard display”.

Manual mode

This operative mode allows you to deactivate automatic control and manually program the percentage power output to the process. When the instrument is in manual mode, the upper display shows the measured value while the lower display shows the power output [preceded by H (for heating action) or C (for cooling action)] The MAN LED is lit. When manual control is selected, the instrument will start to operate with the same power output as the last one supplied by automatic mode and can be modified using the and buttons.

In case of ON/OFF control, 0% corresponds to the deactivated output while any value different from 0 corresponds to the activated output. As in the case of visualization, the programmable values range from H100 (100% output power with reverse action) to C100 (100% output power with direct action).

Notes:

- During manual mode, the alarms are operative.
- If you set manual modes during program execution, the program will be frozen and it will restart when the instrument will come back to Auto mode.
- If you set manual modes during self-tune execution, the self- tune function will be aborted.
- During manual mode, all functions not related with the control (wattmeter, independent timer, “worked time”, etc) continue to operate normally..

STAND-BY MODE

This operative mode also deactivates the automatic control but forces the control output to zero. In this mode the instrument operates as an indicator. When the instrument is in stand by mode the upper display will show the measured value while the lower display will show alternately the set point and the message “St.bY”.

Notes:

- During stand by mode, the relative alarms are disabled while the absolute alarms are operative or not according to the ALxo (Alarm x enabling during Stand-by mode) parameter setting.
- If you set stand by mode during program execution, the program will be aborted.
- If you set stand by mode during self-tune execution, the self- tune function will be aborted.
- During stand by mode, all functions not related with the control (wattmeter, independent timer, “worked time”, etc) continue to operate normally.
- When the instrument is swapped from stand by to auto modes, the instrument will start automatically the alarm masking, the soft start functions and the auto-tune (if programmed).

AUTOTUNE (EVOTUNE)

Evotune is a fast and fully automatic procedure that can be started in any condition, regardless the deviation from SP. The controller selects automatically the best tune method and computes the optimum PID parameters. To activate Evotune press button for 3 seconds.

ERROR MESSAGES

The upper display shows the OVER-RANGE and UNDERRANGE conditions with the following indications:

Over-range:

Under-range

The sensor break will be signalled as an out of range:

Note: When an over-range or an under-range is detected, the alarms operate as in presence of the maximum or the minimum measurable value respectively.

To check the out of span Error condition, proceed as follows:

1. Check the input signal source and the connecting line.
2. Make sure that the input signal is in accordance with the instrument configuration. Otherwise, modify the input configuration.
3. If no error is detected, send the instrument to your supplier to be checked.

List of possible errors

ErAT Fast Auto-tune cannot start. The measure value is tooclose to the set point. Push the button in order to delete the error message.

ouLd Overload on the out 4. The messages shows that a short circuit is present on the Out 4 when it is used as output or as a transmitter power suply. When the short circuit disappears the output restart to operate..

NoAt Auto-tune not finished within 12 hours.

ErEP Possible problem of the instrument memory. The messages disappears automatically. When the error continues, send the instrument to your supplier.

RonE Possible problem of the firmware memory. When this error is detected, send the instrument to your supplier.

Errt Possible problem of the calibration memory. When this error is detected, send the instrument to your supplier.

FACTORY RESET

Sometime, e.g. when you re-configure an instrument previously used for other works or from other people or when you have made too many errors during configuration and you decided to re-configure the instrument, it is possible to restore the factory configuration. This action allows to put the instrument in a defined condition (the same it was at the first power ON).

The default data are those typical values loaded in the instrument prior to ship it from factory. To load the factory default parameter set, proceed as follows:

1. Press the ↵ button for more than 5 seconds. The upper display will show PASS while the lower display shows 0;
2. Using ▲ and ▼ buttons set the value -481;
3. Push ↵ button;
4. The instrument will turn OFF all LEDs for a few seconds, then the upper display will show dFLt (default) and then all LEDs are turned ON for 2 seconds. At this point the instrument restarts as for a new power ON.

The procedure is complete.

Note: The complete list of the default parameters is available in Chapter "Configuration".

VERSIONE MONOSTADIO "TN"
"TN" SINGLE-STAGE VERSION

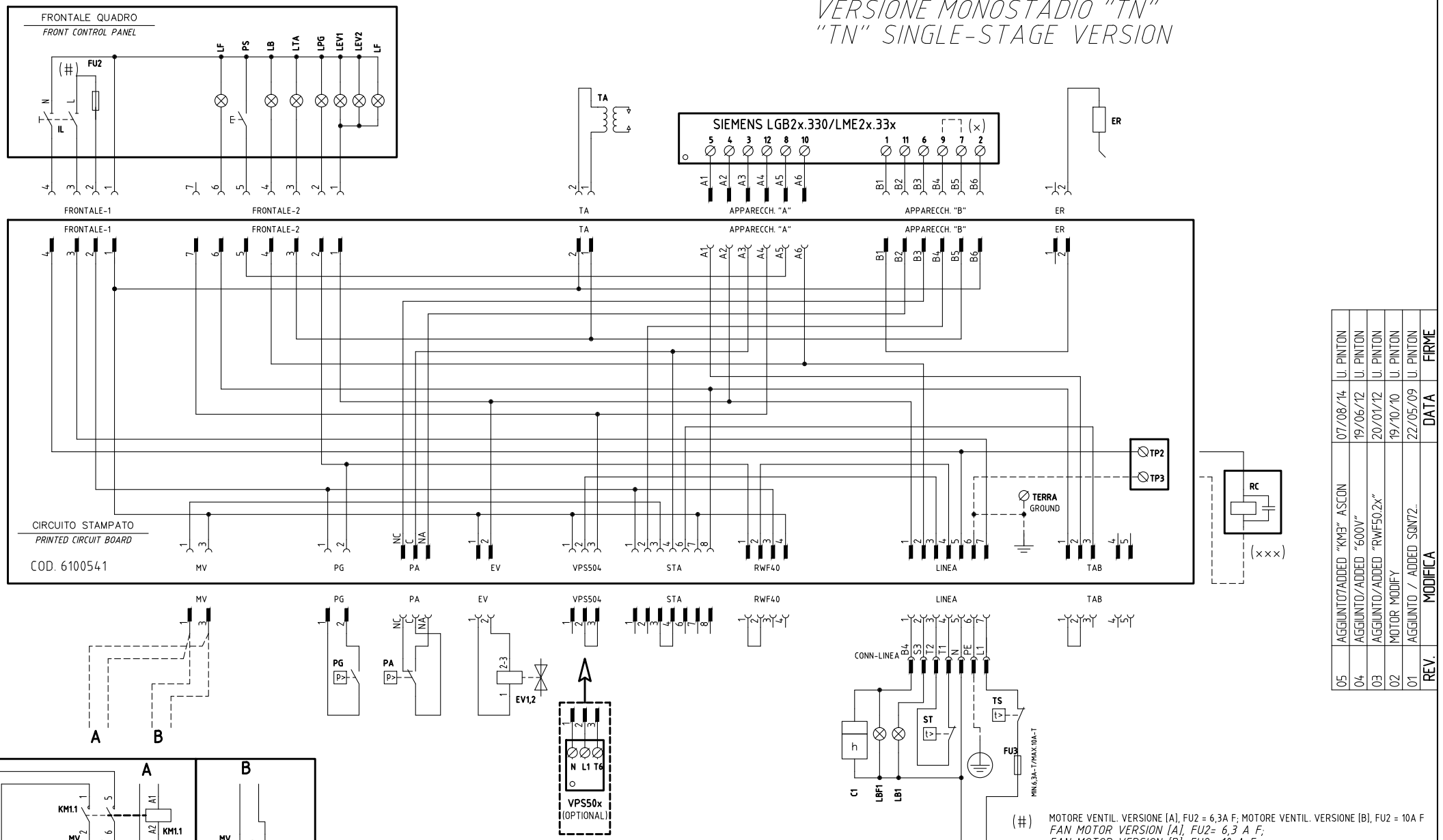

(#) MOTORE VENTIL. VERSIONE [A], FU2 = 6,3A F; MOTORE VENTIL. VERSIONE [B], FU2 = 10A F
FAN MOTOR VERSION [A], FU2= 6,3 A F;
FAN MOTOR VERSION [B], FU2= 10 A F

(×) FARE PONTE TRA I MORSETTI 7 E 9 SOLO CON LGB21.330
CONNECTION BETWEEN TERMINALS 7 AND 9 WITH LGB21.330 ONLY

(×××) SOLO CON ALIMENTAZIONE ELETTRICA SENZA NEUTRO
WITH ELECTRIC SUPPLY WITHOUT NEUTRAL VERSION ONLY

REV.	MODIFICA	DATA	FIRME
05	AGGIUNTO/ADDED "KM3" ASCON	07/08/14	U. PINTON
04	AGGIUNTO/ADDED "600V"	19/06/12	U. PINTON
03	AGGIUNTO/ADDED "RWF50.2x"	20/01/12	U. PINTON
02	MOTOR MODIFY	19/10/10	U. PINTON
01	AGGIUNTO / ADDED SQN72.	22/05/09	U. PINTON

UNIGAS

Impianto
TIPI/TYPES NG(X)350/400/550 – LG(X)350/400/550
MODELLI/MODELS x–.TN(PR)(MD).x.xx.A.x.xx

Descrizione
VERSIONE CON CIRCUITO STAMPATO
WITH PRINTED CIRCUIT VERSION

Ordine

Commessa

Esecutore U. PINTON

Data Controllato 07/08/2014

Controllato E. CAVALLI

Data 19/10/2010

Revisione 05

Dis. N. 18 – 0163

PREC. /

FOGLIO 1

SEGUE 2

TOTALE 5

VERSIONE ALTA-BASSA FIAMMA "AB" / PROGRESSIVO "PR"
"AB" HIGH-LOW / "PR" PROGRESSIVE VERSION

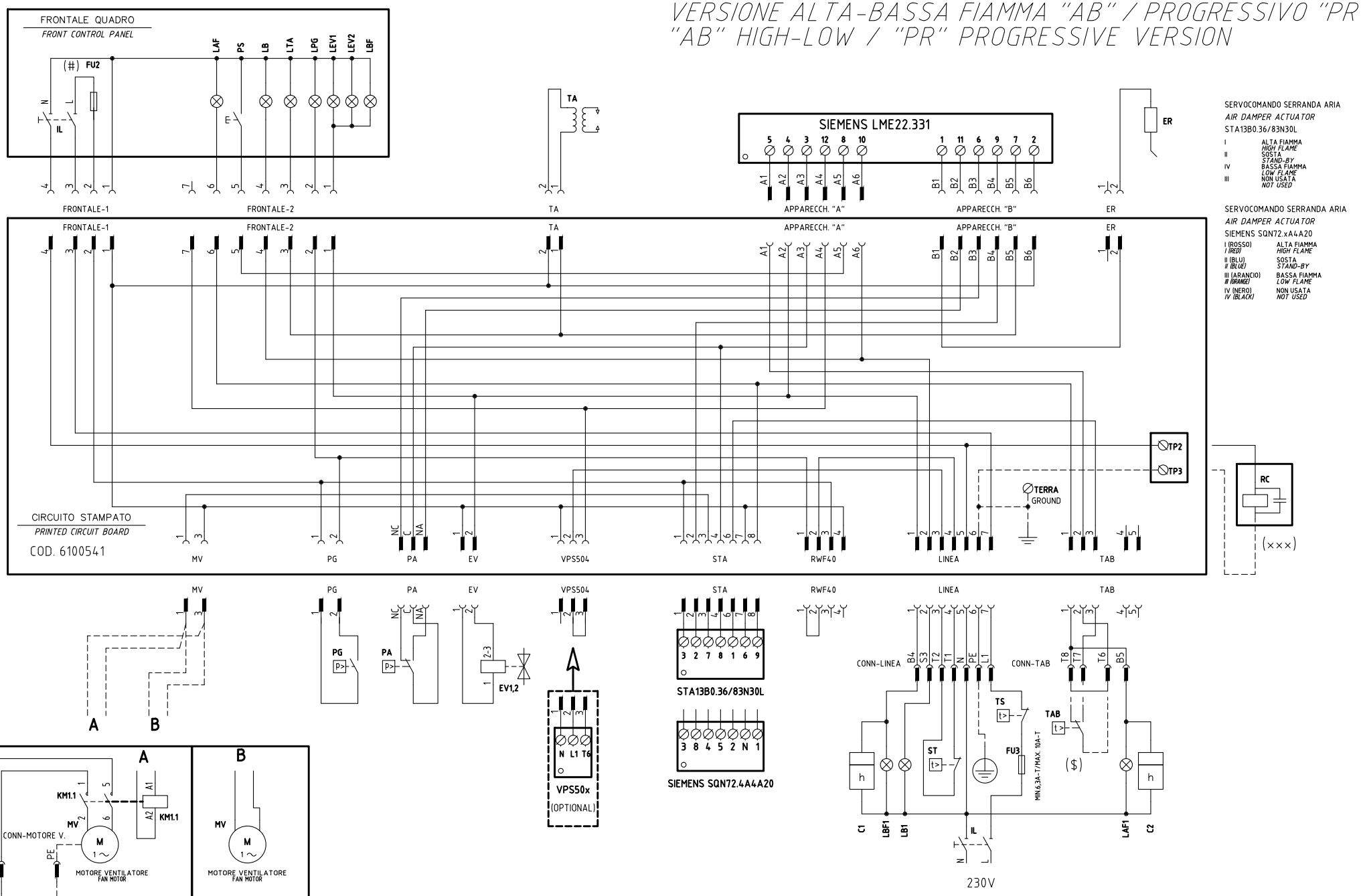

(#) MOTORE VENTIL. VERSIONE [A], FU2 = 6,3A F; MOTORE VENTIL. VERSIONE [B], FU2 = 10A F
FAN MOTOR VERSION [A], FU2= 6,3 A F;
FAN MOTOR VERSION [B], FU2= 10 A F

(×××) SOLO CON ALIMENTAZIONE ELETTRICA SENZA NEUTRO
WITH ELECTRIC SUPPLY WITHOUT NEUTRAL VERSION ONLY

($) SE USATO "TAB", TOGLIERE IL PONTE TRA I MORSETTI T6-T8
IF USED "TAB", REMOVE THE BRIDGE BETWEEN TERMINALS T6-T8

Data 19/10/2010	PREC. 1	FOGLIO 2
Revisione 05		
Dis. N. 18 – 0163	SEGUE 3	TOTALE 5

VERSIONE MODULANTE "MD"
"MD" MODULATING VERSION

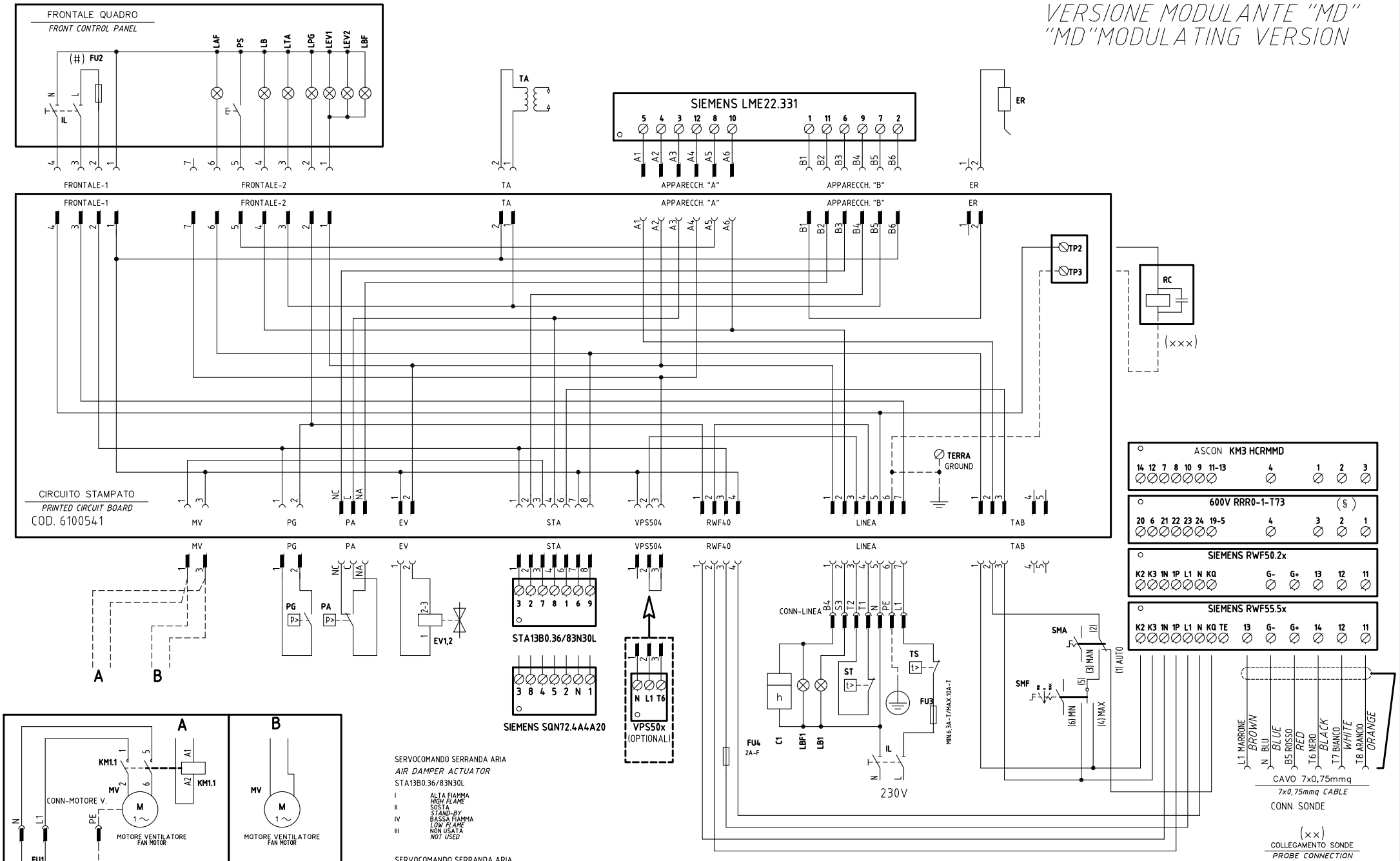

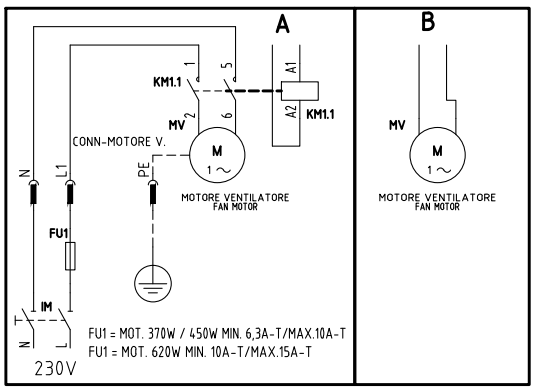

SERVOCOMANDO SERRANDA ARIA
AIR DAMPER ACTUATOR
STA13B0.36/83N30L

I	ALTA FIAMMA *HIGH FLAME*
II	SOSTA *STAND-BY*
IV	BASSA FIAMMA *LOW FLAME*
III	NON USATA *NOT USED*

SERVOCOMANDO SERRANDA ARIA
AIR DAMPER ACTUATOR
SIEMENS SQN72.xA4A20

I (ROSSO) *I (RED)*	ALTA FIAMMA *HIGH FLAME*
II (BLU) *II (BLUE)*	SOSTA *STAND-BY*
III (ARANCIO) *III (ORANGE)*	BASSA FIAMMA *LOW FLAME*
IV (NERO) *IV (BLACK)*	NON USATA *NOT USED*

(#) MOTORE VENTIL. VERSIONE (A), FU2 = 6,3A F; MOTORE VENTIL. VERSIONE (B), FU2 = 10A F
FAN MOTOR VERSION (A), FU2= 6,3 A F;
FAN MOTOR VERSION (B), FU2= 10 A F

(×××) SOLO CON ALIMENTAZIONE ELETTRICA SENZA NEUTRO
WITH ELECTRIC SUPPLY WITHOUT NEUTRAL VERSION ONLY

Data	19/10/2010	PREC. 2	FOGLIO 3
Revisione	05		
Dis. N.	18 – 0163	SEGUE 4	TOTALE 5

(××)
ATTENZIONE COLLEGAMENTO SONDE CON CONNETTORE 7 POLI
WARNING PROBE CONNECTION WITH 7 PINS CONNECTOR

KM3 HCRMMD

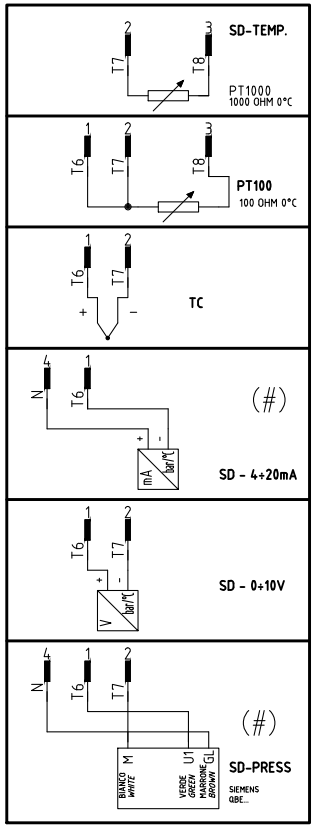

600V RRR0-1-T73

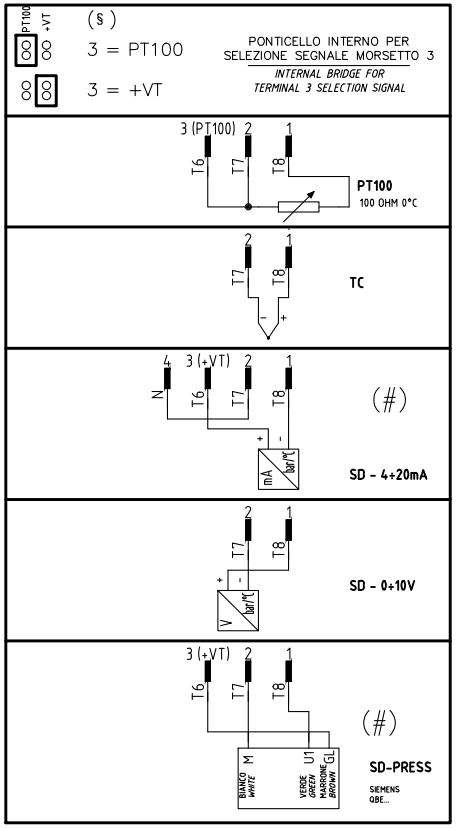

RWF55.5x

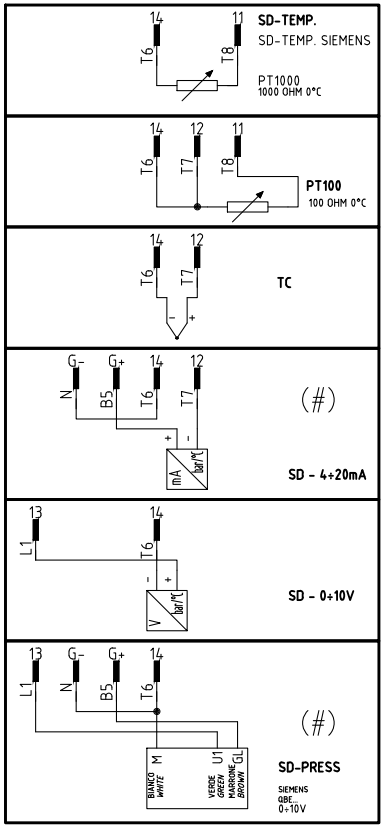

RWF50.2x

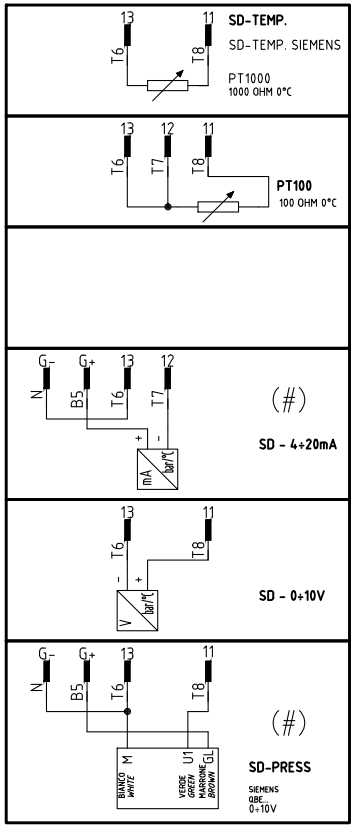

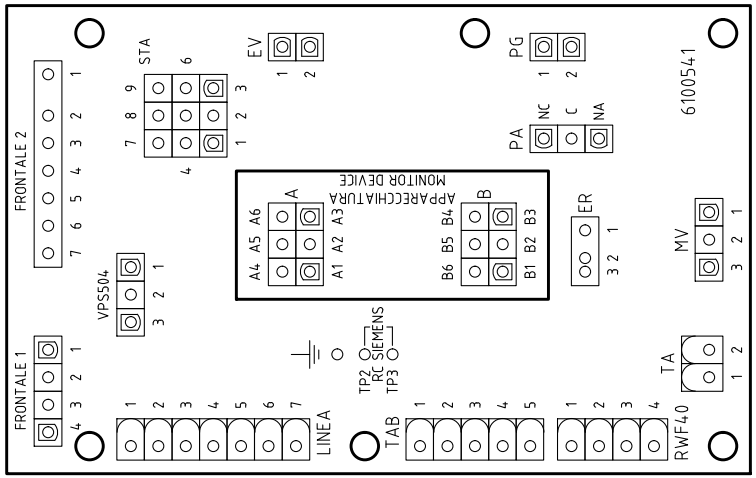

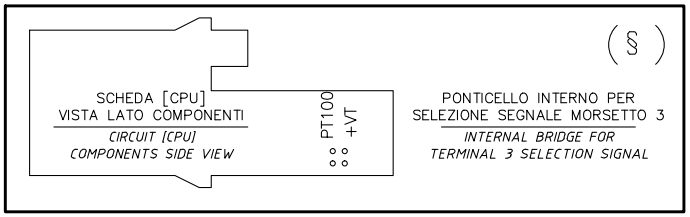

Data 19/10/2010		PREC. 3	FOGLIO 4
Revisione 05			
Dis. N. 18 – 0163		SEGUE 5	TOTALE 5

Sigla/Item	Funzione	Function
600V RRR0-1-T73	REGOLATORE MODULANTE (ALTERNATIVO)	BURNER MODULATOR (ALTERNATIVE)
C1	CONTAORE BASSA FIAMMA	LOW FLAME TIME COUNTER
C2	CONTAORE ALTA FIAMMA	HIGH FLAME TIME COUNTER
ER	ELETTRODO RILEVAZIONE FIAMMA	FLAME DETECTION ELECTRODE
EV1,2	ELETTROVALVOLE GAS (O GRUPPO VALVOLE)	GAS ELECTRO-VALVES (OR VALVES GROUP)
FU1	FUSIBILE LINEA MOTORE VENTILATORE	FAN MOTOR LINE FUSE
FU2	FUSIBILE DI LINEA	LINE FUSE
FU3	FUSIBILE DI LINEA	LINE FUSE
FU4	FUSIBILE AUSILIARIO	AUXILIARY FUSE
IL	INTERRUTTORE LINEA BRUCIATORE	BURNER LINE SWITCH
IM	INTERRUTTORE LINEA MOTORE VENTILATORE	FAN MOTOR LINE SWITCH
KM1.1	CONTATTORE MOTORE VENTILATORE	FAN MOTOR CONTACTOR
KM3 HCRMMD	REGOLATORE MODULANTE (ALTERNATIVO)	BURNER MODULATOR (ALTERNATIVE)
LAF	LAMPADA SEGNALAZIONE ALTA FIAMMA BRUCIATORE	BURNER IN HIGH FLAME INDICATOR LIGHT
LAF1	LAMPADA SEGNALAZIONE ALTA FIAMMA BRUCIATORE	BURNER IN HIGH FLAME INDICATOR LIGHT
LB	LAMPADA SEGNALAZIONE BLOCCO BRUCIATORE	INDICATOR LIGHT FOR BURNER LOCK-OUT
LB1	LAMPADA SEGNALAZIONE BLOCCO BRUCIATORE	INDICATOR LIGHT FOR BURNER LOCK-OUT
LBF	LAMPADA SEGNALAZIONE BASSA FIAMMA BRUCIATORE	BURNER IN LOW FLAME INDICATOR LIGHT
LBF1	LAMPADA SEGNALAZIONE BASSA FIAMMA BRUCIATORE	BURNER IN LOW FLAME INDICATOR LIGHT
LEV1	LAMPADA SEGNALAZIONE APERTURA [EV1]	INDICATOR LIGHT FOR OPENING OF ELECTRO-VALVE [EV1]
LEV2	LAMPADA SEGNALAZIONE APERTURA [EV2]	INDICATOR LIGHT FOR OPENING OF ELECTRO-VALVE [EV2]
LF	LAMPADA SEGNALAZIONE FUNZIONAMENTO BRUCIATORE	INDICATOR LIGHT BURNER OPERATION
LPG	LAMPADA SEGNALAZIONE PRESENZA GAS IN RETE	INDICATOR LIGHT FOR PRESENCE OF GAS IN THE NETWORK
LTA	LAMPADA SEGNALAZIONE TRASFORMATORE DI ACCENSIONE	IGNITION TRANSFORMER INDICATOR LIGHT
MV	MOTORE VENTILATORE	FAN MOTOR
PA	PRESSOSTATO ARIA	AIR PRESSURE SWITCH
PG	PRESSOSTATO GAS DI MINIMA PRESSIONE	MINIMUM GAS PRESSURE SWITCH
PS	PULSANTE SBLOCCO FIAMMA	FLAME UNLOCK BUTTON
PT100	SONDA DI TEMPERATURA	TEMPERATURE PROBE
RC	CIRCUITO RC	RC CIRCUIT
SD-PRESS	SONDA DI PRESSIONE	PRESSURE PROBE
SD-TEMP.	SONDA DI TEMPERATURA	TEMPERATURE PROBE
SD - 0÷10V	TRASDUTTORE USCITA IN TENSIONE	TRANSDUCER VOLTAGE OUTPUT
SD - 4÷20mA	TRASDUTTORE USCITA IN CORRENTE	TRANSDUCER CURRENT OUTPUT
SIEMENS LGB2x.330/LME2x.33x	APPARECCHIATURA CONTROLLO FIAMMA	CONTROL BOX
SIEMENS LME22.331	APPARECCHIATURA CONTROLLO FIAMMA	CONTROL BOX
SIEMENS RWF50.2x	REGOLATORE MODULANTE	BURNER MODULATOR
SIEMENS RWF55.5x	REGOLATORE MODULANTE (ALTERNATIVO)	BURNER MODULATOR (ALTERNATIVE)
SIEMENS SQN72.4A4A20	SERVOCOMANDO SERRANDA ARIA (ALTERNATIVO)	AIR DAMPER ACTUATOR (ALTERNATIVE)
SMA	SELETTORE MANUALE/AUTOMATICO	MANUAL/AUTOMATIC SWITCH
SMF	SELETTORE MANUALE FUNZIONAMENTO MIN-0-MAX	MIN-0-MAX MANUAL OPERATION SWITCH
ST	SERIE TERMOSTATI/PRESSOSTATI	SERIES OF THERMOSTATS OR PRESSURE SWITCHES
STA13B0.36/83N30L	SERVOCOMANDO SERRANDA ARIA	AIR DAMPER ACTUATOR
TA	TRASFORMATORE DI ACCENSIONE	IGNITION TRANSFORMER
TAB	TERMOSTATO/PRESSOSTATO ALTA-BASSA FIAMMA	HIGH-LOW THERMOSTAT/PRESSURE SWITCHES
TC	TERMOCOPPIA	THERMOCOUPLE
TS	TERMOSTATO/PRESSOSTATO DI SICUREZZA	SAFETY THERMOSTAT OR PRESSURE SWITCH
VPS50x	CONTROLLO DI TENUTA VALVOLE GAS (OPTIONAL)	GAS PROVING SYSTEM (OPTIONAL)

Data 19/10/2010		PREC. 4	FOGLIO 5
Revisione 05			
Dis. N. 18 - 0163		SEGUE /	TOTALE 5