RX2050R-FGR

< 30mg/kWh

LAMTEC BT3xx
Microprocessor-controlled
gas burners

MANUAL OF INSTALLATION - USE - MAINTENANCE

CIB UNIGAS

BURNERS - BRUCIATORI - BRULERS - BRENNER - QUEMADORES - ГОРЕЛКИ

M039495CA 0.0 02/2019

DANGERS, WARNINGS AND NOTES OF CAUTION

THIS MANUAL IS SUPPLIED AS AN INTEGRAL AND ESSENTIAL PART OF THE PRODUCT AND MUST BE DELIVERED TO THE USER.

INFORMATION INCLUDED IN THIS SECTION ARE DEDICATED BOTH TO THE USER AND TO PERSONNEL FOLLOWING PRODUCT INSTALLATION AND MAINTENANCE.

THE USER WILL FIND FURTHER INFORMATION ABOUT OPERATING AND USE RESTRICTIONS, IN THE SECOND SECTION OF THIS MANUAL. WE HIGHLY RECOMMEND TO READ IT.

CAREFULLY KEEP THIS MANUAL FOR FUTURE REFERENCE.

1) GENERAL INTRODUCTION

- The equipment must be installed in compliance with the regulations in force, following the manufacturer's instructions, by qualified personnel.
- Qualified personnel means those having technical knowledge in the field of components for civil or industrial heating systems, sanitary hot water generation and particularly service centres authorised by the manufacturer.
- Improper installation may cause injury to people and animals, or damage to property, for which the manufacturer cannot be held liable.
- Remove all packaging material and inspect the equipment for integrity.

In case of any doubt, do not use the unit - contact the supplier.

The packaging materials (wooden crate, nails, fastening devices, plastic bags, foamed polystyrene, etc), should not be left within the reach of children, as they may prove harmful.

- Before any cleaning or servicing operation, disconnect the unit from the mains by turning the master switch OFF, and/or through the cut-out devices that are provided.
- Make sure that inlet or exhaust grilles are unobstructed.
- In case of breakdown and/or defective unit operation, disconnect the unit. Make no attempt to repair the unit or take any direct action.

Contact qualified personnel only.

Units shall be repaired exclusively by a servicing centre, duly authorised by the manufacturer, with original spare parts and accessories.

Failure to comply with the above instructions is likely to impair the unit's safety.

To ensure equipment efficiency and proper operation, it is essential that maintenance operations are performed by qualified personnel at regular intervals, following the manufacturer's instructions.

- When a decision is made to discontinue the use of the equipment, those parts likely to constitute sources of danger shall be made harmless.
- In case the equipment is to be sold or transferred to another user, or in case the original user should move and leave the unit behind, make sure that these instructions accompany the equipment at all times so that they can be consulted by the new owner and/or the installer.
- This unit shall be employed exclusively for the use for which it is meant. Any other use shall be considered as improper and, therefore, dangerous.

The manufacturer shall not be held liable, by agreement or otherwise, for damages resulting from improper installation, use and failure to comply with the instructions supplied by the manufacturer.The occurrence of any of the following circustances may cause explosions, polluting unburnt gases (example: carbon monoxide CO), burns, serious harm to people, animals and things:

- Failure to comply with one of the WARNINGS in this chapter
- Incorrect handling, installation, adjustment or maintenance of the burner
- Incorrect use of the burner or incorrect use of its parts or optional supply

2) SPECIAL INSTRUCTIONS FOR BURNERS

- The burner should be installed in a suitable room, with ventilation openings complying with the requirements of the regulations in force, and sufficient for good combustion.
- Only burners designed according to the regulations in force should be used.
- This burner should be employed exclusively for the use for which it was designed.
- Before connecting the burner, make sure that the unit rating is the same as delivery mains (electricity, gas oil, or other fuel).
- Observe caution with hot burner components. These are, usually, near to the flame and the fuel pre-heating system, they become hot during the unit operation and will remain hot for some time after the burner has stopped.

When the decision is made to discontinue the use of the burner, the user shall have qualified personnel carry out the following operations:

a Remove the power supply by disconnecting the power cord from the mains.

b Disconnect the fuel supply by means of the hand-operated shut-off valve and remove the control handwheels from their spindles.

Special warnings

- Make sure that the burner has, on installation, been firmly secured to the appliance, so that the flame is generated inside the appliance fire-box.
- Before the burner is started and, thereafter, at least once a year, have qualified personnel perform the following operations:

a set the burner fuel flow rate depending on the heat input of the appliance;

b set the flow rate of the combustion-supporting air to obtain a combustion efficiency level at least equal to the lower level required by the regulations in force;

c check the unit operation for proper combustion, to avoid any harmful or polluting unburnt gases in excess of the limits permitted by the regulations in force;

d make sure that control and safety devices are operating properly;

e make sure that exhaust ducts intended to discharge the products of combustion are operating properly;

f on completion of setting and adjustment operations, make sure that all mechanical locking devices of controls have been duly tightened;

g make sure that a copy of the burner use and maintenance instructions is available in the boiler room.

- In case of a burner shut-down, reser the control box by means of the RESET pushbutton. If a second shut-down takes place, call the Technical Service, **without trying to RESET further**.
- The unit shall be operated and serviced by qualified personnel only, in compliance with the regulations in force.

3) GENERAL INSTRUCTIONS DEPENDING ON FUEL USED

3a) ELECTRICAL CONNECTION

- For safety reasons the unit must be efficiently earthed and installed as required by current safety regulations.
- It is vital that all saftey requirements are met. In case of any doubt, ask for an accurate inspection of electrics by qualified personnel, since the manufacturer cannot be held liable for damages that may be caused by failure to correctly earth the equipment.
- Qualified personnel must inspect the system to make sure that it is adequate to take the maximum power used by the equipment shown on the equipment rating plate. In particular, make sure that the system cable cross section is adequate for the power absorbed by the unit.
- No adaptors, multiple outlet sockets and/or extension cables are permitted to connect the unit to the electric mains.
- An omnipolar switch shall be provided for connection to mains, as required by the current safety regulations.
- The use of any power-operated component implies observance of a few basic rules, for example:
  -do not touch the unit with wet or damp parts of the body and/or with bare feet;
  - do not pull electric cables;
  - do not leave the equipment exposed to weather (rain, sun, etc.) unless expressly required to do so;
  - do not allow children or inexperienced persons to use equipment;
- The unit input cable shall not be replaced by the user.
  In case of damage to the cable, switch off the unit and contact qualified personnel to replace.
  When the unit is out of use for some time the electric switch supplying all the power-driven components in the system (i.e. pumps, burner, etc.) should be switched off.

3b) FIRING WITH GAS, LIGHT OIL OR OTHER FUELS

GENERAL

- The burner shall be installed by qualified personnel and in compliance with regulations and provisions in force; wrong installation can cause injuries to people and animals, or damage to property, for which the manufacturer cannot be held liable.
- Before installation, it is recommended that all the fuel supply system pipes be carefully cleaned inside, to remove foreign matter that might impair the burner operation.
- Before the burner is commissioned, qualified personnel should inspect the following:

a the fuel supply system, for proper sealing;
b the fuel flow rate, to make sure that it has been set based on the firing rate required of the burner;
c the burner firing system, to make sure that it is supplied for the designed fuel type;
d the fuel supply pressure, to make sure that it is included in the range shown on the rating plate;
e the fuel supply system, to make sure that the system dimensions are adequate to the burner firing rate, and that the system is equipped with all the safety and control devices required by the regulations in force.

- When the burner is to remain idle for some time, the fuel supply tap or taps should be closed.

SPECIAL INSTRUCTIONS FOR USING GAS

Have qualified personnel inspect the installation to ensure that:

a the gas delivery line and train are in compliance with the regulations and provisions in force;
b all gas connections are tight;
c the boiler room ventilation openings are such that they ensure the air supply flow required by the current regulations, and in any case are sufficient for proper combustion.

- Do not use gas pipes to earth electrical equipment.
- Never leave the burner connected when not in use. Always shut the gas valve off.
- In case of prolonged absence of the user, the main gas delivery valve to the burner should be shut off.

Precautions if you can smell gas

a do not operate electric switches, the telephone, or any other item likely to generate sparks;
b immediately open doors and windows to create an air flow to purge the room;
c close the gas valves;
d contact qualified personnel.

- Do not obstruct the ventilation openings of the room where gas appliances are installed, to avoid dangerous conditions such as the development of toxic or explosive mixtures.

DIRECTIVES AND STANDARDS

Gas burners

European directives

-Regulation 2016/426/UE (appliances burning gaseous fuels)
-2014/35/UE (Low Tension Directive)
-2014/30/UE (Electromagnetic compatibility Directive)
-2006/42/EC (Machinery Directive)

Harmonized standards

-UNI EN 676 (Automatic forced draught burners for gaseous fuels)
-EN 55014-1 (Electromagnetic compatibility- Requirements for house hold appliances, electric tools and similar apparatus)
-EN 60204-1:2006 (Safety of machinery – Electrical equipment of machines.)
-CEI EN 60335-1 (Specification for safety of household and similar electrical appliances);
-CEI EN 60335-2-102 (Household and similar electrical appliances. Safety. Particular requirements for gas, oil and solid-fuel burning appliances having electrical connections).
-UNI EN ISO 12100:2010 (Safety of machinery - General principles for design - Risk assessment and risk reduction);

Light oil burners

European directives

-2014/35/UE (Low Tension Directive)
-2014/30/UE (Electromagnetic compatibility Directive)
-2006/42/EC (Machinery Directive)

Harmonized standards

-UNI EN 267-2011(Automatic forced draught burners for liquid fuels)
-EN 55014-1 (Electromagnetic compatibility- Requirements for house hold appliances, electric tools and similar apparatus)
-EN 60204-1:2006 (Safety of machinery – Electrical equipment of machines.)
-CEI EN 60335-1 (Specification for safety of household and similar electrical appliances);
-CEI EN 60335-2-102 (Household and similar electrical appliances. Safety. Particular requirements for gas, oil and solid-fuel burning appliances having electrical connections).
-UNI EN ISO 12100:2010 (Safety of machinery - General principles for design - Risk assessment and risk reduction);

Heavy oil burners

European Directives

-2014/35/UE (Low Tension Directive)
-2014/30/UE (Electromagnetic compatibility Directive)
-2006/42/EC (Machinery Directive)

Harmonized standards

-UNI EN 267(Automatic forced draught burners for liquid fuels)
-EN 55014-1 (Electromagnetic compatibility- Requirements for house hold appliances, electric tools and similar apparatus)
-EN 60204-1:2006 (Safety of machinery – Electrical equipment of machines.)
-CEI EN 60335-1 (Specification for safety of household and similar electrical appliances);
-CEI EN 60335-2-102 (Household and similar electrical appliances. Safety. Particular requirements for gas, oil and solid-fuel burning appliances having electrical connections).
-UNI EN ISO 12100:2010 (Safety of machinery - General principles for design - Risk assessment and risk reduction);

Gas - Light oil burners

European Directives

-Regulation 2016/426/UE (appliances burning gaseous fuels)
-2014/35/UE (Low Tension Directive)
-2014/30/UE (Electromagnetic compatibility Directive)
-2006/42/EC (Machinery Directive)

Harmonized standards

-UNI EN 676 (Automatic forced draught burners for gaseous fuels)
-UNI EN 267(Automatic forced draught burners for liquid fuels)
-EN 55014-1 (Electromagnetic compatibility- Requirements for house hold appliances, electric tools and similar apparatus)
-EN 60204-1:2006 (Safety of machinery – Electrical equipment of machines.)
-CEI EN 60335-1 (Specification for safety of household and similar electrical appliances);
-CEI EN 60335-2-102 (Household and similar electrical appliances. Safety. Particular requirements for gas, oil and solid-fuel burning appliances having electrical connections).
-UNI EN ISO 12100:2010 (Safety of machinery - General principles for design - Risk assessment and risk reduction);

Gas - Heavy oil burners

European directives:

-Regulation 2016/426/UE (appliances burning gaseous fuels)
-2014/35/UE (Low Tension Directive)
-2014/30/UE (Electromagnetic compatibility Directive)
-2006/42/EC (Machinery Directive)

Harmonized standards

-UNI EN 676 (Automatic forced draught burners for gaseous fuels)
-EN 55014-1 (Electromagnetic compatibility- Requirements for house hold appliances, electric tools and similar apparatus)
-EN 60204-1:2006 (Safety of machinery – Electrical equipment of machines.)
-CEI EN 60335-1 (Specification for safety of household and similar electrical appliances);
-CEI EN 60335-2-102 (Household and similar electrical appliances. Safety. Particular requirements for gas, oil and solid-fuel burning appliances having electrical connections).
-UNI EN ISO 12100:2010 (Safety of machinery - General principles for design - Risk assessment and risk reduction);

Industrial burners

European directives

-Regulation 2016/426/UE (appliances burning gaseous fuels)
-2014/35/UE (Low Tension Directive)
-2014/30/UE (Electromagnetic compatibility Directive)
-2006/42/EC (Machinery Directive)

Harmonized standards

-EN 55014-1 (Electromagnetic compatibility- Requirements for house hold appliances, electric tools and similar apparatus)
-EN 746-2 (Industrial thermoprocessing equipment - Part 2: Safety requirements for combustion and fuel handling systems)
-UNI EN ISO 12100:2010 (Safety of machinery - General principles for design - Risk assessment and risk reduction);
-EN 60204-1:2006 (Safety of machinery – Electrical equipment of machines.)
-EN 60335-2 (Electrical equipment of non-electric appliances for household and similar purposes. Safety requirements)

Burner data plate

For the following information, please refer to the data plate:

- burner type and burner model: must be reported in any communication with the supplier
- burner ID (serial number): must be reported in any communication with the supplier
- date of production (year and month)
- information about fuel type and network pressure

Type	--
Model	--
Year	--
S.Number	--
Output	--
Oil Flow	--
Fuel	--
Category	--
Gas Pressure	--
Viscosity	--
El.Supply	--
El.Consump.	--
Fan Motor	--
Protection	--
Drwaing n°	--
P.I.N.	--

SYMBOLS USED

WARNING! Failure to observe the warning may result in irreparable damage to the unit or damage to the environment

DANGER! Failure to observe the warning may result in serious injuries or death.

WARNING! Failure to observe the warning may result in electric shock with lethal consequences

Figures, illustrations and images used in this manual may differ in appearance from the actual product.

BURNER SAFETY

The burners - and the configurations described below - comply with the regulations in force regarding health, safety and the environment. For more in-depth information, refer to the declarations of conformity that are an integral part of this Manual.

DANGER! Incorrect motor rotation can seriously damage property and injure people.

Residual risks deriving from misuse and prohibitions

The burner has been built in order to make its operation safe; there are, however, residual risks.

Do not touch any mechanical moving parts with your hands or any other part of your body. Injury hazard
Do not touch any parts containing fuel (i.e. tank and pipes). Scalding hazard
Do not use the burner in situations other than the ones provided for in the data plate.
Do not use fuels other than the ones stated.
Do not use the burner in potentially explosive environments.
Do not remove or by-pass any machine safety devices.
Do not remove any protection devices or open the burner or any other component while the burner is running.
Do not disconnect any part of the burner or its components while the burner is running.
Untrained staff must not modify any linkages.

After any maintenance, it is important to restore the protection devices before restarting the machine.
All safety devices must be kept in perfect working order.
Personnel authorized to maintain the machine must always be provided with suitable protections.

ATTENTION: while running, the parts of the burner near the generator (coupling flange) are subject to overheating. Where necessary, avoid any contact risks by wearing suitable PPE.

PART I: SPECIFICATIONS

BURNERS FEATURES

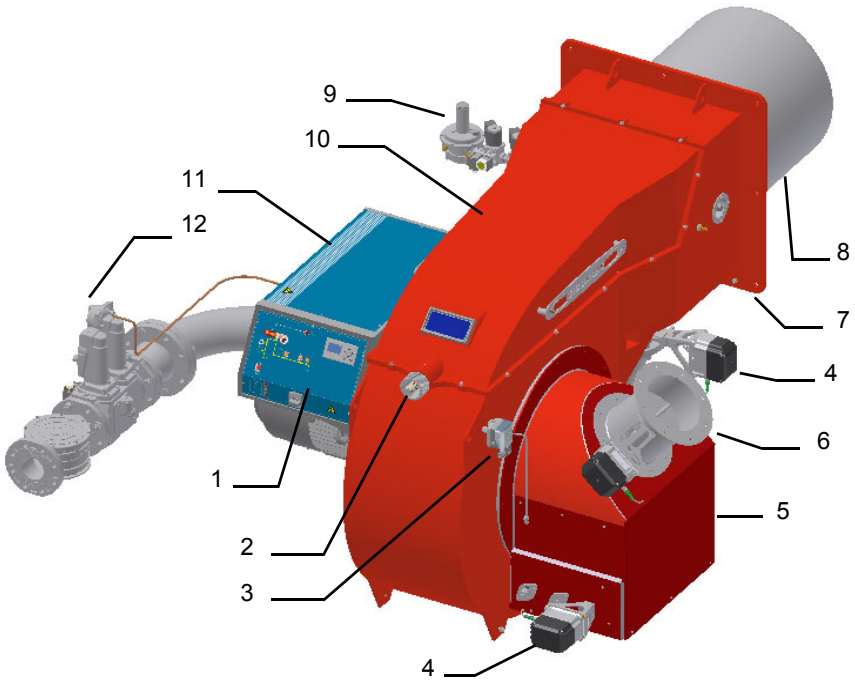

1. Control panel with startup switch
2. Combustion head adjusting ring nut
3. Air pressure switch
4. Actuator
5. Air damper
6. FGR, flue gas recirculationa (FGR burners only)
7. Flange
8. Blast tube + Combustion head
9. Pilot
10. Cover
11. Electrical panel
12. Gas train

Gas operation: the gas coming from the supply line, passes through the valves group provided with filter and governor. This one forces the pressure in the utilisation limits. The actuators move proportionally the air damper and the gas butterfly valve, in order to achieve the optimisation of the gas flue values, as to get an efficient combustion.

The adjustable combustion head can improve the burner performance. The combustion head determines the energetic quality and the geometry of the flame. Fuel and comburent are routed into separated ways as far as the zone of flame generation (combustion chamber). The control panel, placed on the burner front side, shows each operating stage.

Burner model identification

Burners are identified by burner type and model. Burner model identification is described as follows.

Type	**RX2050R-FGR**	Model	**M-.**	**PR.**	**S.**	***.**	**A.**	**1.**	**80.**	**LF**
	(1)		**(2)**	**(3)**	**(4)**	**(5)**	**(6)**	**(7)**	**(8)**	**(9)**

1	BURNER TYPE	**RX2050-FGR**
2	FUEL	M - Natural gas
3	OPERATION (Available versions)	PR - Progressive
4	BLAST TUBE	S - Standard L - Extended
5	DESTINATION COUNTRY	* - see data plate
6	BURNER VERSION	A - Standard Y - Special
7	EQUIPMENT	1 = 2 gas valves + gas proving system 8 = 2 gas valves + gas proving system + maximum gas pressure switch
8	GAS CONNECTION	80 = DN80 100 = DN100
9	MICRO-PROCESSOR CONTROL	LF = Medium-large burners complete with electronic cam and temperature-compensated flue gas recirculation, without O_2 monitoring, without inverter.

Fuel

The burner technical specifications, described in this manual, refer to natural gas (calorific net value Hi = 9,45 kWh/Stm^3, density ρ = 0,717 Kg/Stm^3). For different fuel such as LPG, town gas and biogas, multiply the values of flow and pressure by th corrective factors shown in the table below.

Fuel	**Hi** (KWh/Stm^3)	**ρ** (kg/Stm^3)	$\mathbf{f_Q}$	$\mathbf{f_p}$
LPG	26,79	2,151	0,353	0,4
Town gas	4,88	0,6023	1,936	3,3
Biogas	6,395	1,1472	1,478	3,5

For example, to obtain the flow and pressure values for the biogas:

$$Q_{biogas} = Q_{naturalGas} \cdot 1,478$$

$$p_{biogas} = p_{naturalGas} \cdot 3,5$$

ATTENTION! The combustion head type and the settings depend on the fuel. The burner must be used only for its intended purpose specified in the burner data plate .

ATTENTION! The corrective factors in the above table depend on the gas composition, so on the calorifc value and the density of the gas. The above value can be taken only as reference.

Technical Specifications

BURNER TYPE		RX2050R-FGR M-..
Output	min. - max. kW	1.780 - 10.400
Fuel		M - Natural gas
Category		(see next paragraph)
Gas rate- Natural gas	min.- max. (Stm^3/h)	188 - 1.101
Gas pressure	mbar	(see Note 2)
Power supply		400V 50Hz 3N A.C.
Total power consumption	kW	37,5
Electric motor	kW	37,0
Protection		IP40
Operation		MD - Fully modulating
Gas train 80	Valves size / Gas connection	80 / DN80
Gas train 100	Valves size / Gas connection	100 / DN100
Operating temperature	°C	-10 ÷ +50
Storage Temperature	°C	-20 ÷ +60
Working service		Continuous

Note1:	**All gas flow rates are referred to Stm^3 / h (1.013 mbar absolute pressure, 15 °C temperature) and are valid for G20 gas (net calorific value H_i = 34,02 MJ / Stm^3); for L.P.G. (net calorific value H_i = 93,5 MJ / Stm^3)**
Note2:	**Maximum gas pressure = 360 mbar (with Dungs MBDLE)** **= 500 mbar (with Siemens VGD)** **Minimum gas pressure = see gas curves.**
Note3:	**Burners are suitable only for indoor operation with a maximum relative humidity of 80 %**

Country and usefulness gas categories

GAS CAT	COUNTRY																								
I_{2H}	AT	ES	GR	SE	FI	IE	HU	IS	NO	CZ	DK	GB	IT	PT	CY	EE	LV	SI	MT	SK	BG	LT	RO	TR	CH
I_{2E}	LU	PL	-	-	-	-	-	-	-	-	-	-	-	-	-	-	-	-	-	-	-	-	-	-	-
$I_{2E(R}$	BE	-	-	-	-	-	-	-	-	-	-	-	-	-	-	-	-	-	-	-	-	-	-	-	-
(*)	NL	-	-	-	-	-	-	-	-	-	-	-	-	-	-	-	-	-	-	-	-	-	-	-	-
I_{2ELL}	DE	-	-	-	-	-	-	-	-	-	-	-	-	-	-	-	-	-	-	-	-	-	-	-	-
I_{2Er}	FR	-	-	-	-	-	-	-	-	-	-	-	-	-	-	-	-	-	-	-	-	-	-	-	-

(*) Only for I_{2EK} : the appliance was configured for the appliance category K (I2K) and is suitable for the use of G and G+ distribution gases according to the specifications as included in the NTA 8837:2012 Annex D with a Wobbe index of 43.46 – 45.3 MJ/m3 (dry, 0 °C, upper value) or 41.23 – 42.98 (dry, 15 °C, upper value). This appliance can moreover be converted and/or be calibrated for the appliance category E (I2E). This therefore implies that the appliance "is suitable for G+ gas and H gas or is demonstrably suitable for G+ gas and can demonstrably be made suitable for H gas" within the meaning of the "Dutch Decree of 10 May 2016 regarding amendment of the Dutch Gas Appliances Decree and the Dutch Commodities (Administrative Fines) Act in connection with the changing composition of gas in the Netherlands as well as technical amendment of some other decrees.

Fuel

DANGER! The burner must be used only with the fuel specified in the burner data plate.

Type	--
Model	--
Year	--
S.Number	--
Output	--
Oil Flow	--
Fuel	--
Category	--
Gas Pressure	--
Viscosity	--
El.Supply	--
El.Consump.	--

Overall dimensions (mm) - RX2050R-FGR

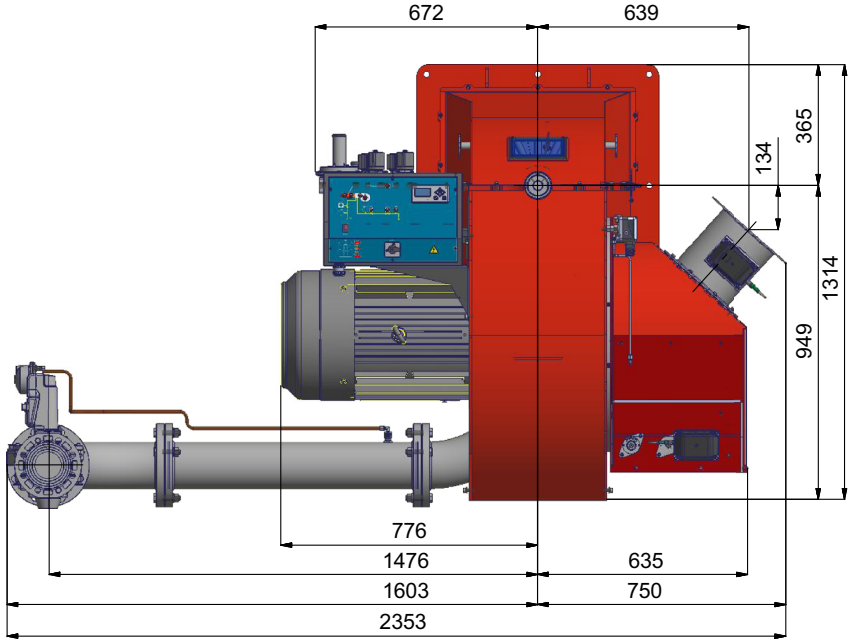

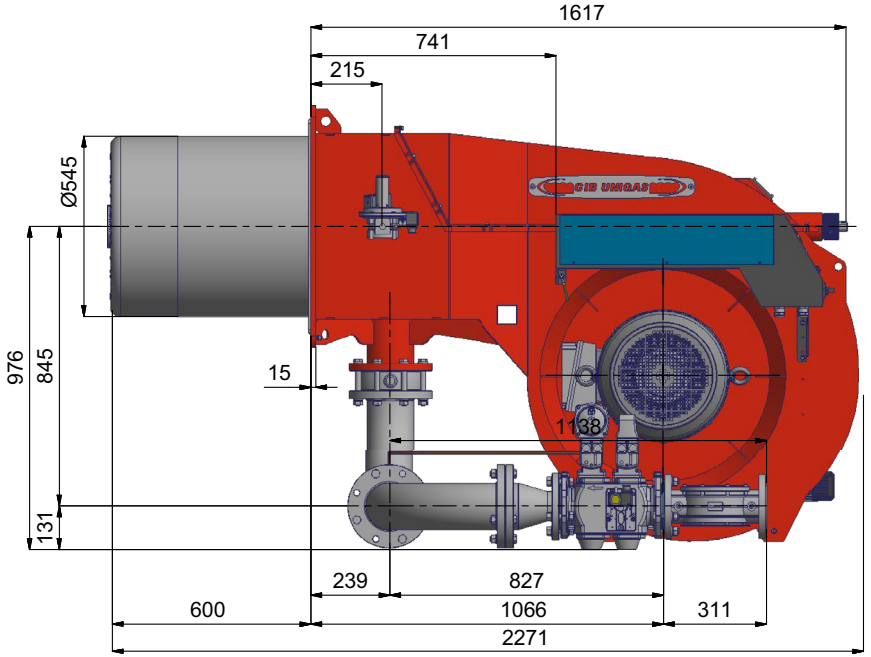

Burner flange

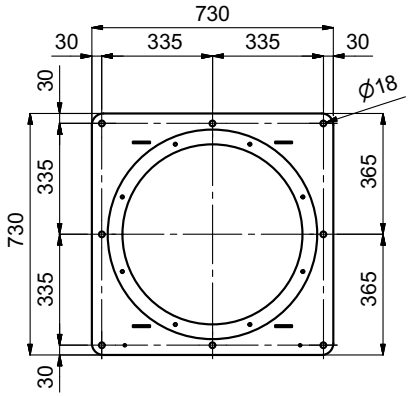

Boiler recommended drilling template

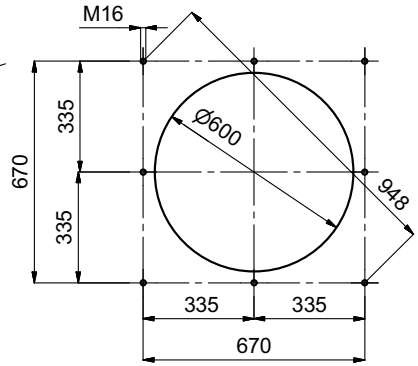

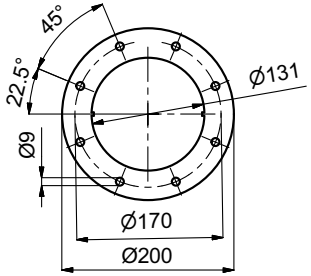

BURNER FLANGE

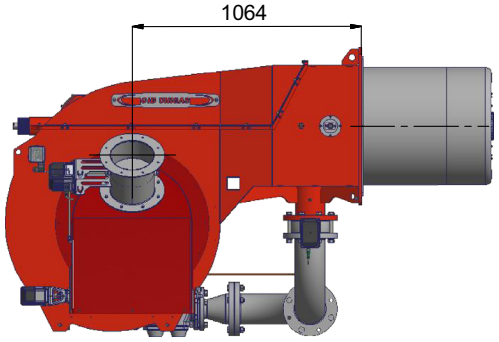

Fig. 4 - 3I2MG-23 v0 **Hydraulic diagram BT3xx**

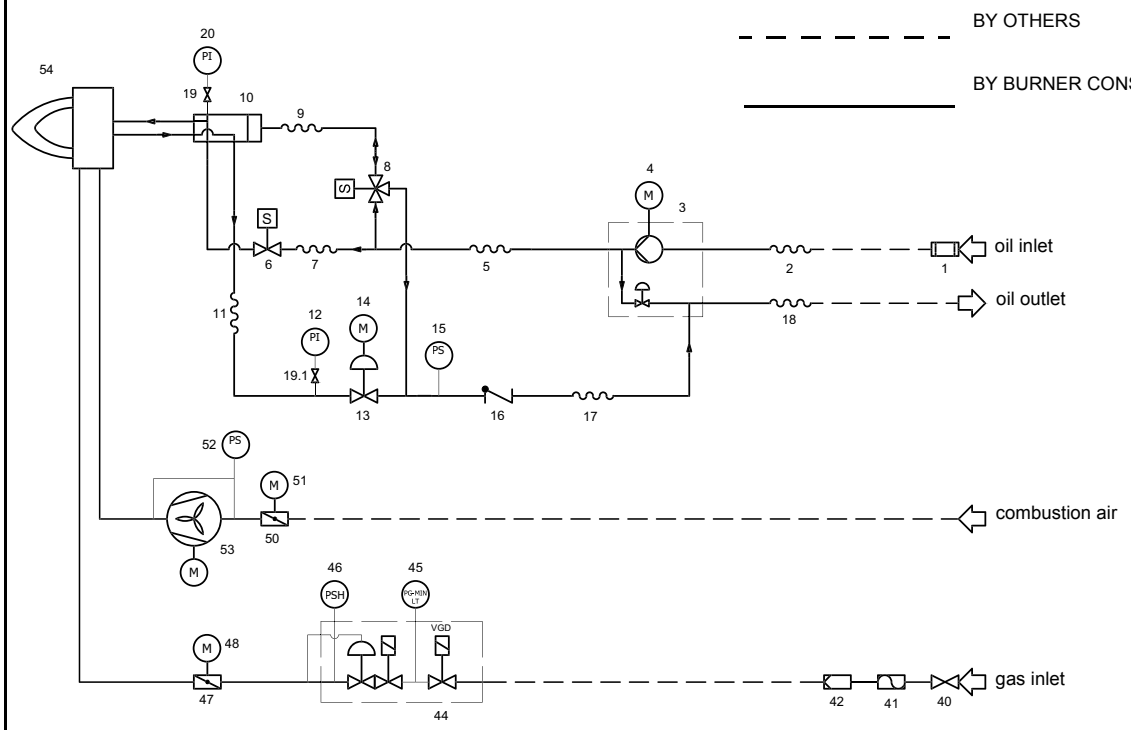

NOTE: The following items are optional: 19, 19.1, 20, 40, 41, 46

NOTE: The following items are included only on certain types of burner: 5,7,9,11,17

3I2MG23 rev.0	LEGEND
POS	**OIL TRAIN**
1	Filter
2	Flexible hose
3	Pump and pressure governor
4	Electrical motor
5	Flexible hose
6	Solenoid valve
7	Flexible hose
8	3-way solenoid valve
9	Flexible hose
10	Oil distributor
11	Flexible hose
12	Pressure gauge
13	Pressure governor
14	Electrical motor
15	Pressure switch
16	One-way valve
17	Flexible hose
18	Flexible hose
19	Manual valve
19.1	Manual valve
20	Pressure gauge
	MAIN GAS TRAIN
40	Manual valve
41	Bellows unit
42	Filter
44	Safety valve with built in gas governor
45	Proving system pressure switch - PGCP
46	Pressure switch - PGMAX
47	Butterfly valve
48	Electrical motor
	COMBUSTION AIR TRAIN
50	Air damper
51	Actuator
52	Pressure switch - PA
53	Draught fan with electromotor
54	Burner

How to read the burner "Performance curve"

To check if the burner is suitable for the boiler to which it must be installed, the following parameters are needed:

- furnace input, in kW or kcal/h (kW = kcal/h/860);
- backpressure (data are available on the boiler ID plate or in the user's manual).

Example:

Furnace input: 600kW

Backpressure: 4 mbar

In the "Performance curve" diagram, draw a vertical line matching the furnace input value and an horizontal line matching the backpressure value. The burner is suitable if the intersection point A is inside the performance curve.
Data are referred to standard conditions: atmospheric pressure at 1013 mbar, ambient temperature at 15° C.

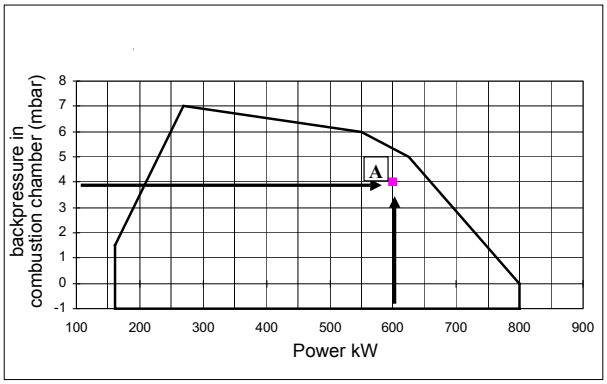

Checking the proper gas train size

To check the proper gas train size, it is necessary to the available gas pressure value upstream the burner's gas valve. Then subtract the backpressure. The result is called **pgas.** Draw a vertical line matching the furnace input value (600kW, in the example), quoted on the x-axis, as far as intercepitng the network pressure curve, according to the installed gas train (DN65, in the example). From the interception point, draw an horizontal line as far as matching, on the y-axis, the value of pressure necessary to get the requested furnace input. This value must be lower or equal to the **pgas** value, calculated before.

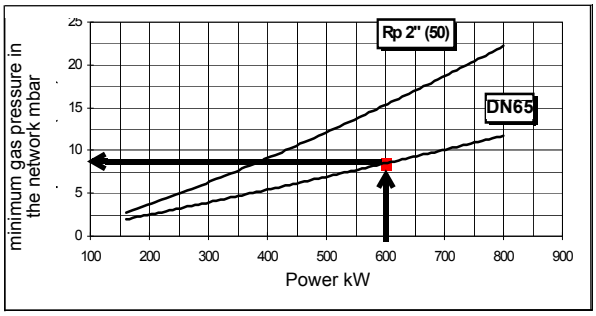

Performance Curves

RX2050R-FGR

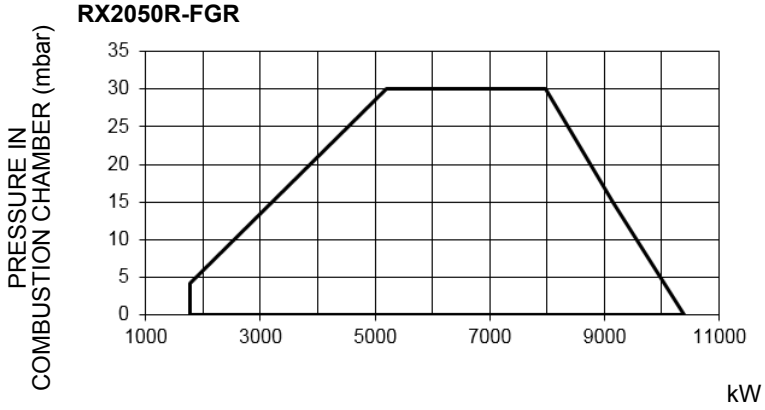

To get the input in kcal/h, multiply value in kW by 860.

Data are referred to standard conditions: atmospheric pressure at 1013mbar, ambient temperature at 15° C

NOTE: The performance curve is a diagram that represents the burner performance in the type approval phase or in the laboratory tests, but does not represent the regulation range of the machine. On this diagram the maximum output point is usually reached by adjsuting the combustion head to its “MAX” position (see paragraph “Adjusting the combustion head”); the minimum output point is reached setting the combustion head to its “MIN” position. During the first ignition, the combustion head is set in order to find a compromise between the burner output and the generator specifications, that is why the minimum output may be different from the Performance curve minimum.

Pressure in the Network / gas flow rate curves (natural gas)

RX1205R-FGR M-..

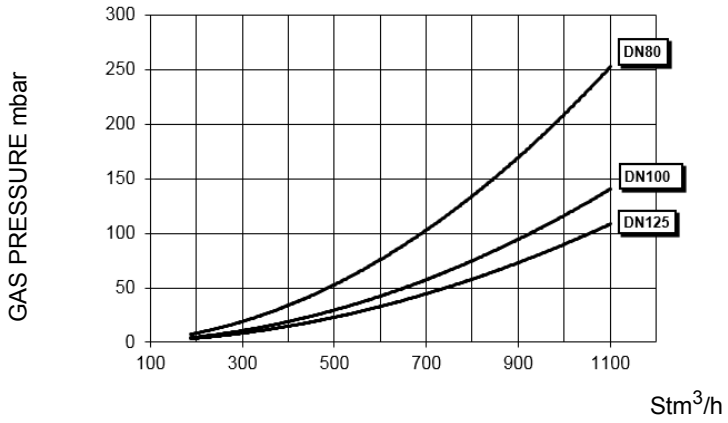

ATTENTION: the gas rate value is quoted on the x-axis, the related network pressure is quoted on the y-axis (pressure value in the combustion chamber is not included). To know the minimum pressure at the gas train inlet, necessary to get the requested gas rate, add the pressure value in the combustion chamber to the value read on the y-axis.

Combustion head gas pressure curves

Combustion head gas pressure depends on gas flow and combustion chamber backpressure. When backpressure is subtracted, it depends only on gas flow, provided combustion is properly adjusted, flue gases residual O2 percentage complies with “Recommended combustion values” table and CO in the standard limits). During this stage, the combustion head, the gas butterfly valve and the actuator are at the maximum opening. Refer to Fig. 5, showing the correct way to measure the gas pressure, considering the values of pressure in combustion chamber, surveyed by means of the pressure gauge or taken from the boiler’s Technical specifications.

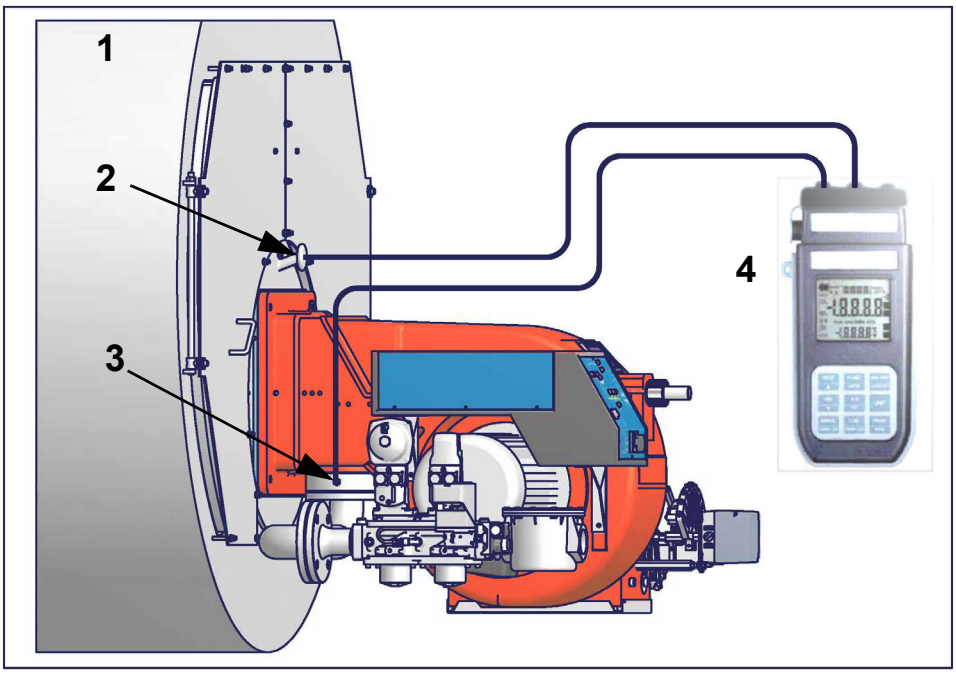

Fig. 5

Note: the figure is indicative only.

Key

1 Generator
2 Pressure outlet on the combustion chamber
3 Gas pressure outlet on the butterfly valve
4 Differential pressure gauge

Measuring gas pressure in the combustion head

In order to measure the pressure in the combustion head, insert the pressure gauge probes: one into the combustion chamber’s pressure outlet to get the pressure in the combustion chamber and the other one into the butterfly valve’s pressure outlet of the burner. On the basis of the measured differential pressure, it is possible to get the maximum flow rate: in the pressure - rate curves (showed on the next paragraph), it is easy to find out the burner’s output in Stm^3/h (quoted on the x axis) from the pressure measured in the combustion head (quoted on the y axis). The data obtained must be considered when adjusting the gas flow rate.

ATTENTION: THE BURNED GAS RATE MUST BE READ AT THE GAS FLOW METER. WHEN IT IS NOT POSSIBLE, THE USER CAN REFERS TO THE PRESSURE-RATE CURVES AS GENERAL INFORMATION ONLY.

Pressure - rate in combustion head curves (natural gas)

Curves are referred to pressure = 0 mbar in the combustion chamber!

RX2050R-FGR M-..

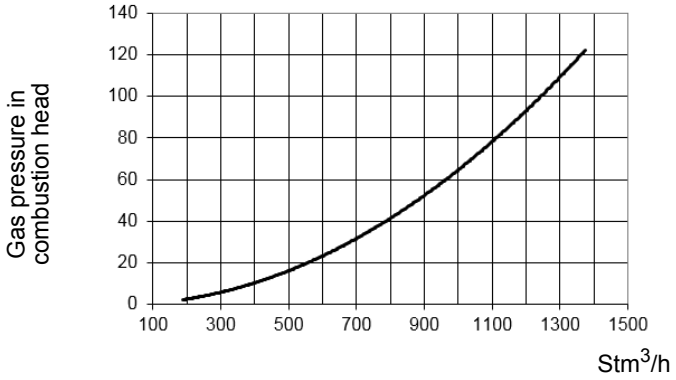

PART II: INSTALLATION

MOUNTING AND CONNECTING THE BURNER

Transport and storage

ATTENTION! The equipment must be installed in compliance with the regulations in force, following the manufacturer's instructions, by qualified personnel. All handling operations must be carried out with appropriate resources and qualified personnel

ATTENTION: Use intact and correctly dimensioned hoisting equipment, conforms to the local regulations and health and safety regulations. Do not stand under lifted loads.

If the product must be stored, avoid humid and corrosive places. Observe the temperatures stated in the burner data table at the beginning of this manual.

Packing

The burners are despatched in wooden crates whose dimensions are:

- **2.834 mm x 1.820 mm x 1.779 mm (L x P x H)**

Packing cases of this type are affected by humidity and are not suitable for stacking.

The following are placed in each packing case:

- burner with detached gas train;
- gasket or ceramic fibre plait (according to burner type) to be inserted between the burner and the boiler;
- envelope containing this manual and other documents.

To get rid of the burner's packing, follow the procedures laid down by current laws on disposal of materials.

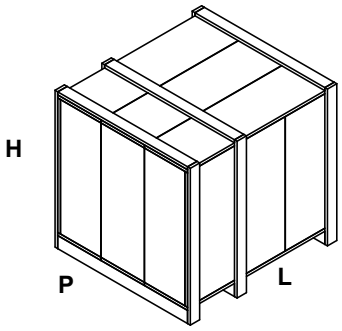

Handling the burner

WARNING! The handling operations must be carried out by specialised and trained personnel. If these operations are not carried out correctly, the residual risk for the burner to overturn and fall down still persists. To move the burner, use means suitable to support its weight (see paragraph "Technical specifications").
The unpacked burner must be lifted and moved only by means of a fork lift truck.

The burner is mounted on a stirrup provided for handling the burner by means of a fork lift truck: the forks must be inserted into the A anb B ways. Remove the stirrup only once the burner is installed to the boiler.

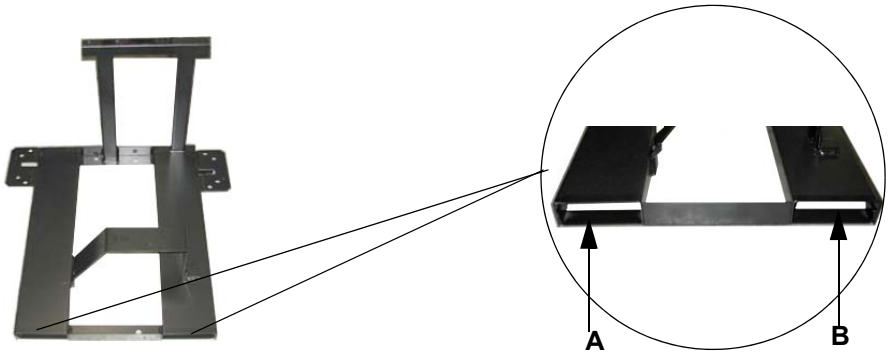

Fitting the burner to the boiler

To perform the installation, proceed as follows:

1 drill the furnace plateas decribed in paragraph (“Overall dimensions”);

2 place the burner towards the furnace plate: lift and move the burner by means of its eyebolts placed on the top side (see”Lifting and moving the burner”);

3 screw the stud bolts (5) in the plate holes, according to the burner’s drilling plate described on paragraph “Overall dimensions”;

4 place the ceramic fibre rope on the burner flange (if necessary, use a spray adhesive on the flange).

5 install the burner into the boiler;

6 fix the burner to the stud bolts, by means of the fixing nuts, according to the picture below.

7 After fitting the burner to the boiler, ensure that the gap between the blast tube and the refractory lining is sealed with appropriate insulating material (ceramic fibre cord or refractory cement).

;

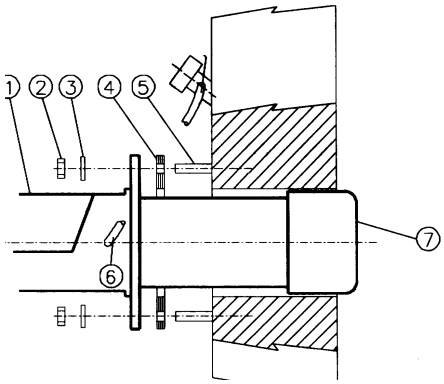

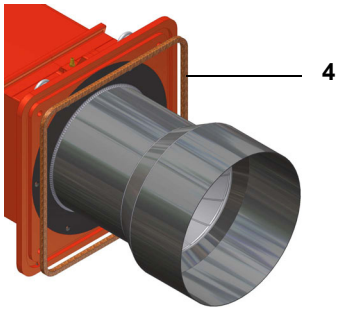

Keys

1 Burner
2 Fixing nut
3 Washer
4 Ceramic fibre plait
5 Stud bolt
7 Blast tube

Matching the burner to the boiler (low NOx burners)

The burners described in this manual have been tested with combustion chambers that comply with EN676 regulation and whose dimensions are described in the diagram . In case the burner must be coupled with boilers with a combustion chamber smaller in diameter or shorter than those described in the diagram, please contact the supplier, to verify that a correct matching is possible, with respect of the application involved. To correctly match the burner to the boiler verify the type of the blast tube . Verify the necessary input and the pressure in combustion chamber are included in the burner performance curve; otherwise the choice of the burner must be revised consulting the burner manufacturer. To choose the blast tube lenght consider the following rule, even if it differs from the instructions of the boiler manufacturer: Cast-iron boilers, three pass flue boilers (with the first pass in the rear part): the blast tube must protrude about 150÷200 mm into the combustion chamber (Fig. 6).The length of the blast tubes does not always allow this requirement to be met, and thus it may be necessary to use a suitably-sized spacer to move the burner backwards (Fig. 7).

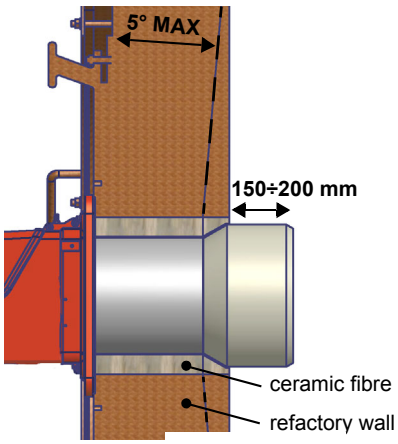

Fig. 6

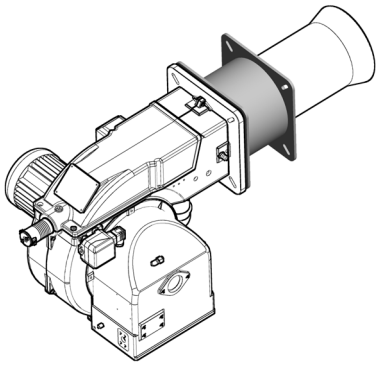

Fig. 7

WARNING! Carefully seal the free space between blast tube and the refractory lining with ceramic fibre rope or other suitable means.

Sizing of the FGR pipe (FGR burners only)

ATTENTION! Performance curve is obtained in a plant designed according to the example picture, sizing the pipe as per the example below.

""

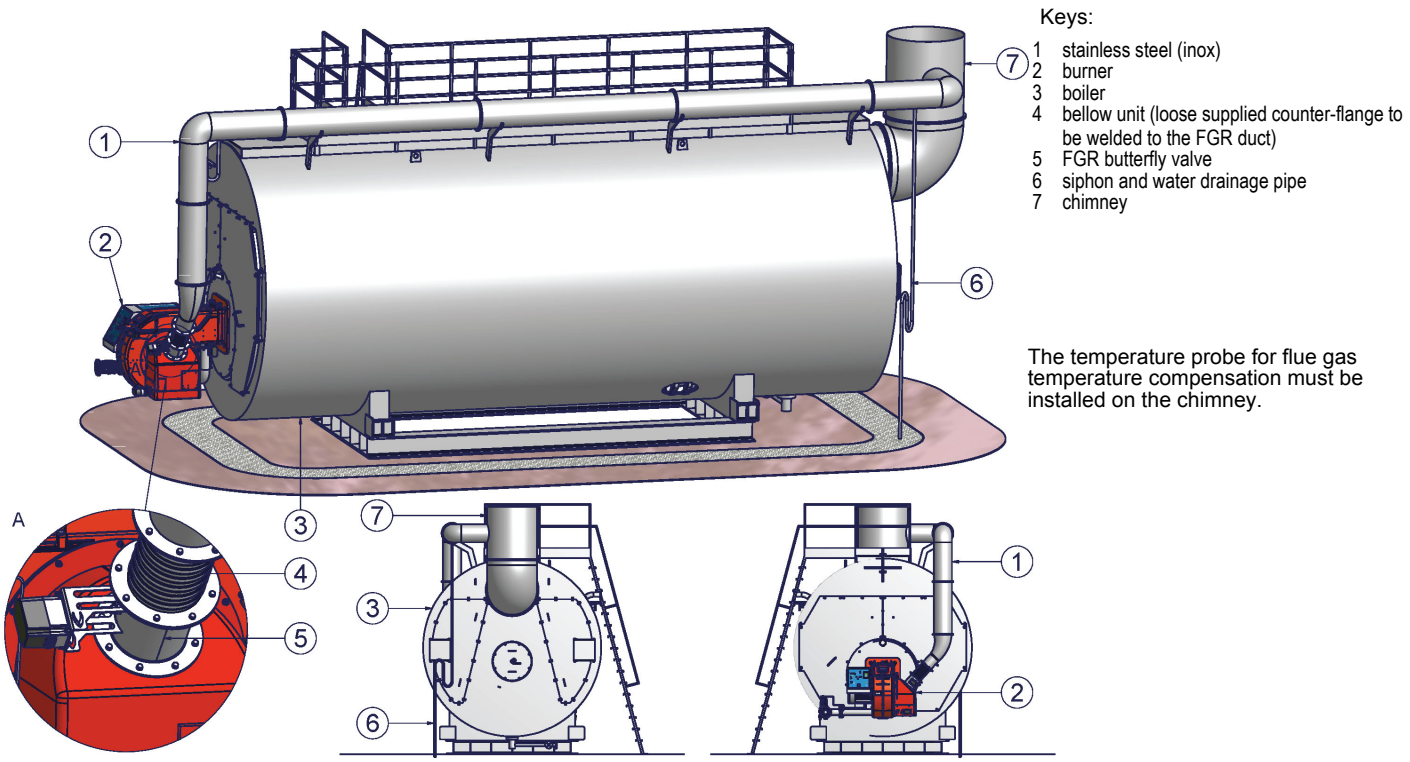

The internal diameter of the FGR conduit must be dimensioned considering a maximum speed of 10 m / s. Assume a volumetric flow rate of FGR fumes for the dimensioning equal to 20% of the comburent air flow.

:Example:

Let's say 4.816 kW is the maximum burner output:

required combustion air flow will then be 5.800 Stm^3/h = 1,61 Stm^3/s in standard conditions (15 °C; 1.013 mbar).

Flue gas temperature:	150 °C or 150 + 273,15 = 423,15 K
Ambient temperature:	15 °C or 15 + 273,15 = 288,15 K
FGR flow:	1,61 x 20% = 0,322 Stm3 / s
FGR flow:	0,322 x 423,15 / 288,15 = 0,473 m3 / s @ (t = 150 °C)
FGR pipe section:	0,473 m3/s / 10 m/s = 0,0473 m2

Pipe internal diameter must be larger than 245 mm to ensure proper FGR flow.

* FGR = Flue gas recirculation system

ATTENTION! Pipe elbows increase pressure losses, so limit their use as much as possible.

GAS TRAIN CONNECTIONS

The diagrams show the components of the gas trai included in the delivery and which must be fitted by the installer.The diagrams are in compliance with the current laws.

WARNING: BEFORE EXECUTING THE CONNECTIONS TO THE GAS PIPE NETWORK, BE SURE THAT THE MANUAL CUTOFF VALVES ARE CLOSED.

Gas train with valves group VGD with built-in gas pressure governor + gas pressure switch (PGMIN/LT)

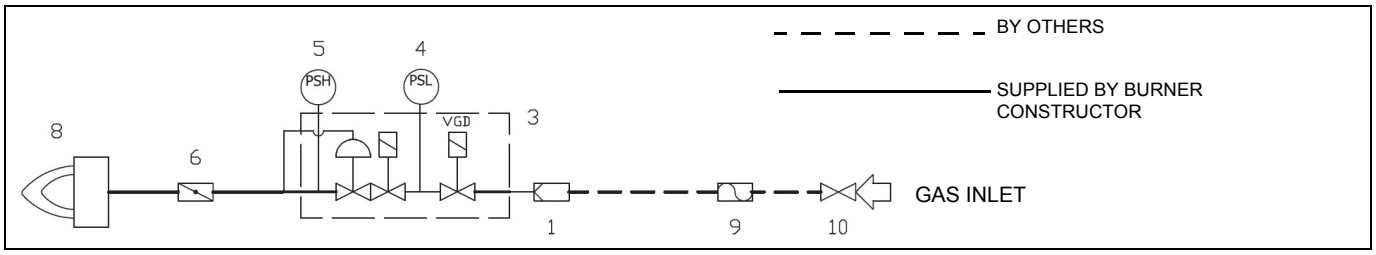

Key

1	Filter	6	Butterfly valve
		8	Main burner
3	Safety valve with built in gas governor	9	Bellows unit(*optional)
4	Pressure switch - PGMIN/LT	10	Manual valve(*optional)
5	Pressure switch - PGMAX(*optional)		

Assembling the gas train

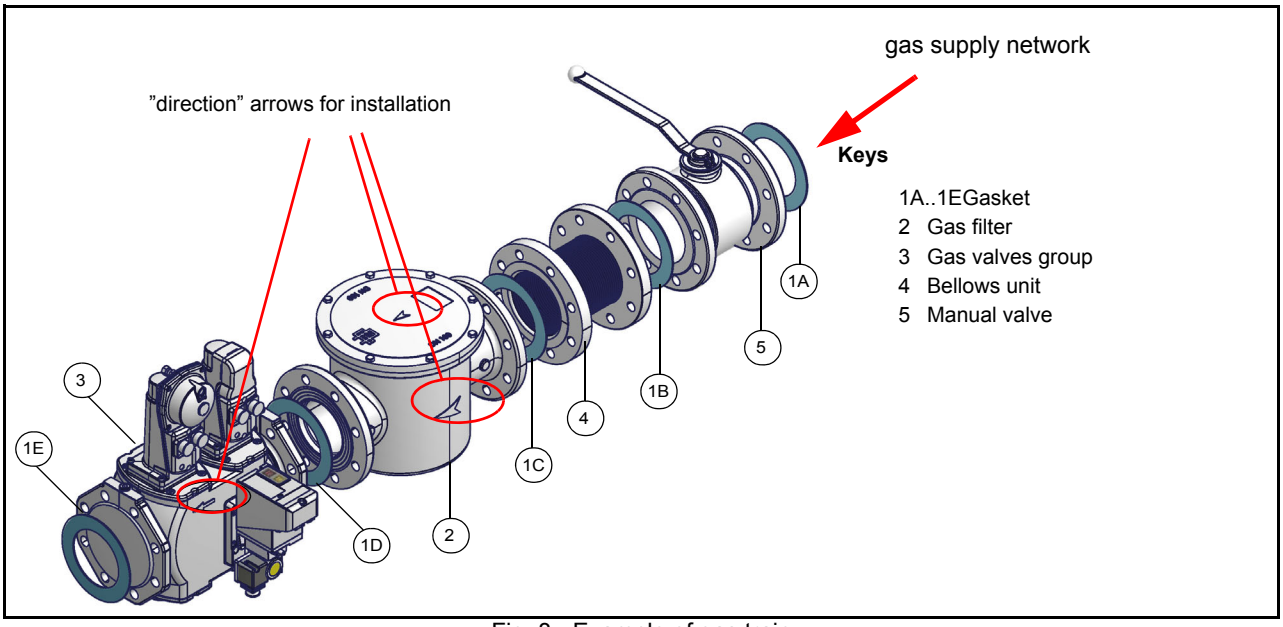

Fig. 8 - Example of gas train

To mount the gas train, proceed as follows:

1-a) in case of threaded joints: use proper seals according to the gas used;

1-b) in case of flanged joints: place a gasket (no. 1A..1E -) between the elements

2) fasten all the items by means of screws, according to the diagrams showed, observing the mounting direction for each item;

NOTE: the bellows unit, the manual cutoff valve and the gaskets are not part of the standard supply.

ATTENTION: once the gas train is mounted according to the diagram on Fig. 1, the gas proving test mus be performed, according to the procedure set by the laws in force.

ATTENTION: it is recommended to mount filter and gas valves to avoid that extraneous material drops inside the valves, during maintenance and cleaning operation of the filters (both the filters outside the valves group and the ones built-in the gas valves).

The procedures of installation fo the gas valves are showed in the next paragraphs, according to the gas train used:

- threaded gas trains with Siemens VGD20..
- flanged gas trains with Siemens VGD40..

Siemens VGD20.. and VGD40.. gas valves - with SKP2.. (pressure governor)

Mounting

- When mounting the VGD.. double gas valve, two flanges are required (as for VGD20.. model, the flanges are threaded); to prevent cuttings from falling inside the valve, first fit the flanges to the piping and then clean the associated parts;
- install the valve;
- the direction of gas flow must be in accordance with the direction of the arrow on the valve body;
- ensure that the bolts on the flanges are properly tightened;
- ensure that the connections with all components are tight;
- make certain that the O-rings and gaskets between the flanges and the double gas valve are fitted.
- Connect the reference gas pipe (**TP** in figure; 8mm-external size pipe supplied loose), to the gas pressure nipples placed on the gas pipe, downstream the gas valves: gas pressure must be measured at a distance that must be at least 5 times the pipe size.

Leave the blowhole free (**SA** in figure). Should the spring fitted not permit satisfactory regulation, ask one of our service centres for a suitable replacement.

Caution: the SKP2 diaphragm D must be vertical (see Fig. 9).

WARNING: removing the four screws BS causes the device to be unserviceable!

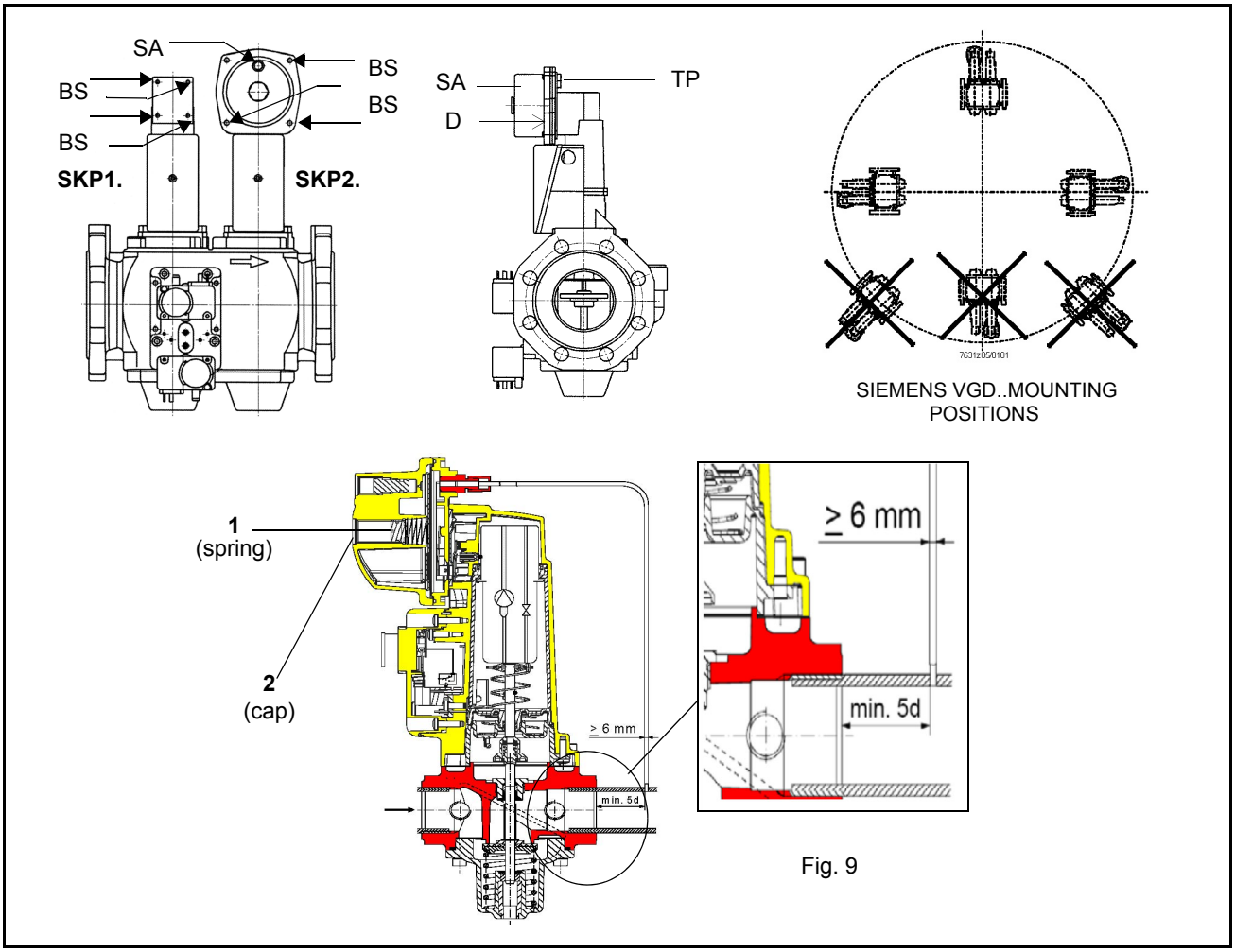

Fig. 9

Siemens VGD valves with SKP actuator:

The pressure adjusting range, upstream the gas valves group, changes according to the spring provided with the valve group.

Performance range (mbar)	0 - 22	15 - 120	100 - 250
Spring colour	neutral	yellow	red

Once the gas train in installed, execute the electrical connections for all its items (gas valves group, gas proving system, pressure switches).

Gas Filter (if provided)

The gas filters remove the dust particles that are present in the gas, and prevent the elements at risk (e.g.: burner valves, counters and regulators) from becoming rapidly blocked. The filter is normally installed upstream from all the control and on-off devices.

ATTENTION: it is reccomended to install the filter with gas flow parallel to the floor in order to prevent dust fall on the safety valve during maintenance operation.

Pilot gas train

The connection to the pilot gas train must be done according to the following scheme, valid for LPG. In case of natural gas, connect the pressure goveror (pos. 3) to the natural gas line (maximum input pressure = 1 bar).

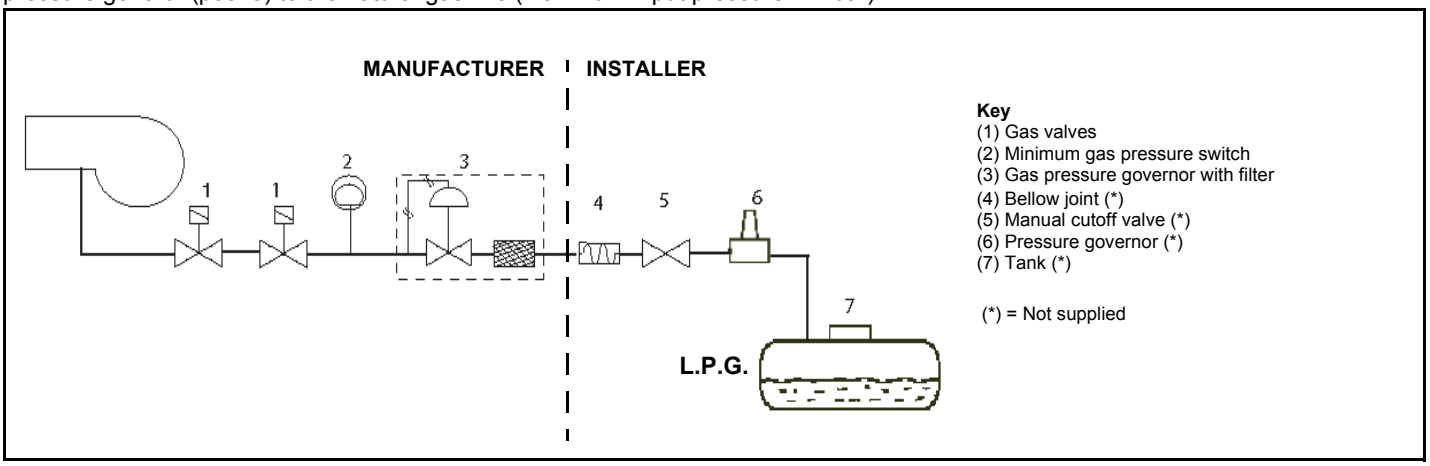

Fig. 10

The pilot gas train is already installed into the burner, the connection from the filter with stabiliser to the gas supply network must be carried out.

connection to the gas supply network - 1/2”

Once the gas train in installed, execute the electrical connections for all its items (gas valves group, pressure switch).

ATTENTION: once the gas train is mounted according to the diagram on Fig. 10, the gas proving test mus be performed, according to the procedure set by the laws in force.

The pilot gas train is already installed to the burner, the following connections must be executed:

- connection from the filter with stabiliser to the gas supply network

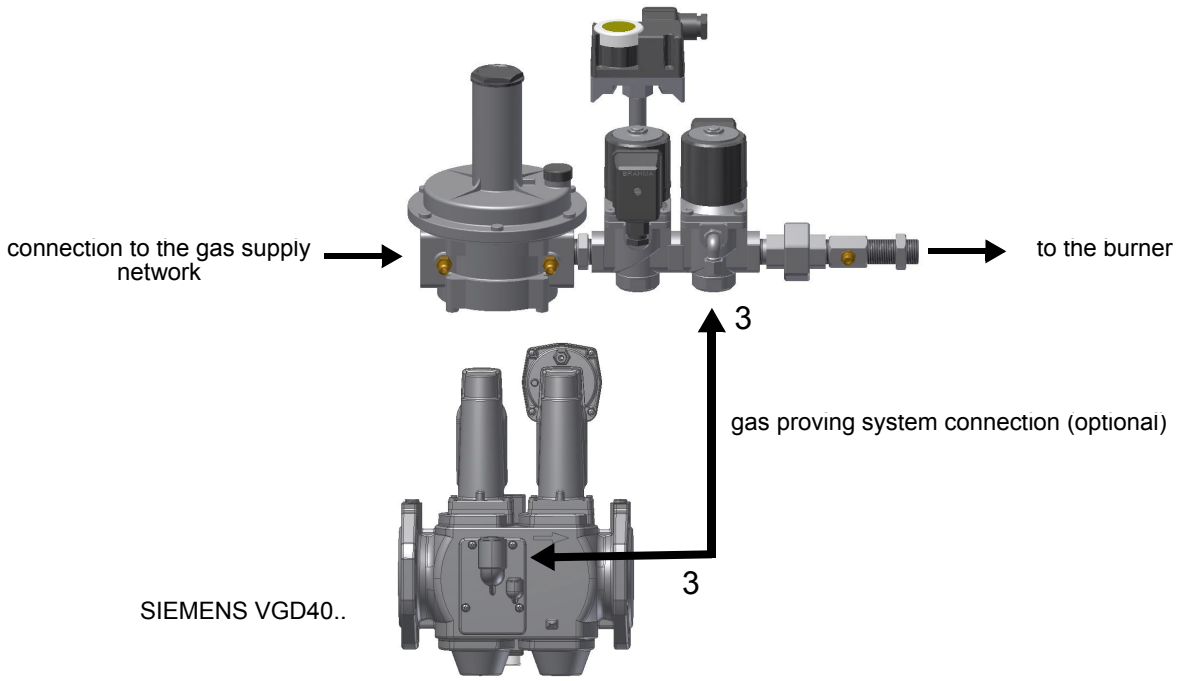

Fig. 11 - pipe port (3) for connecting the pilot gas train to the valves group of the main gas train

Integrated proving system burners equipped with BT3x

When the burner is switched off, the BT3x device proceeds with an evacuation test, opens the EV1 valve (burner side) and makes sure to bring the test volume (space between EV2 and EV1) to atmospheric pressure.

The BT3xx device uses only one pressure switch (PGMIN/LT) mounted between the EV1-EV2 valves which acts as a leak test in the "Gas valve seal" test phase and a minimum pressure pressure switch during "Start and burner operation" .

The BT3xx equipment performs a tight check of the gas valves according to the pressure felt by the pressure switch installed between the valves (PGMIN / LT).

Case A: the pressure between the valves EV1 and EV2 is equal to zero.

- The BT3xx device opens the EV1 valve for a few seconds and fills the chamber between EV1 and EV2.
- The PGMIN / LT pressure switch senses the pressure (which remains present and stable) and closes the contact giving consent to continue the cycle to the equipment.

Case B: presence of pressure between the valves EV1 and EV2.

- In this case the BT3xx device opens the EV2 volvo to evacuate the gas between EV1 and EV2.
- In this way the PGMIN / LT pressure switch permanently feels zero pressure and opens the contact.
- The cycle continues by opening the valve EV1 to pressurize the section between the valves EV1 and EV2.
- The PGMIN / LT pressure switch senses the increase in pressure (which remains present and stable), closes the contact giving consent to the equipment to continue the starting cycle.

When the burner is switched off due to the intervention of the thermostat / boiler pressure switch, the BT3xx keeps the EV2 gas valve open to allow the pressure between the gas valves to be released and the PGMIN / LT pressure switch contact to rest and ready to restart the burner.

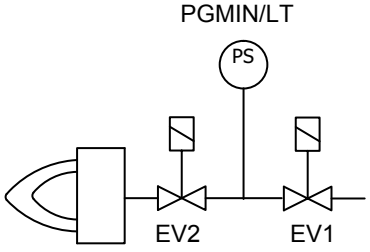

PART III: OPERATION

LIMITATIONS OF USE

THE BURNER IS AN APPLIANCE DESIGNED AND CONSTRUCTED TO OPERATE ONLY AFTER BEING CORRECTLY CONNECTED TO A HEAT GENERATOR (E.G. BOILER, HOT AIR GENERATOR, FURNACE, ETC.), ANY OTHER USE IS TO BE CONSIDERED IMPROPER AND THEREFORE DANGEROUS.

THE USER MUST GUARANTEE THE CORRECT FITTING OF THE APPLIANCE, ENTRUSTING THE INSTALLATION OF IT TO QUALIFIED PERSONNEL AND HAVING THE FIRST COMMISSIONING OF IT CARRIED OUT BY A SERVICE CENTRE AUTHORISED BY THE COMPANY MANUFACTURING THE BURNER.

A FUNDAMENTAL FACTOR IN THIS RESPECT IS THE ELECTRICAL CONNECTION TO THE GENERATOR'S CONTROL AND SAFETY UNITS (CONTROL THERMOSTAT, SAFETY, ETC.) WHICH GUARANTEES CORRECT AND SAFE FUNCTIONING OF THE BURNER.

THEREFORE, ANY OPERATION OF THE APPLIANCE MUST BE PREVENTED WHICH DEPARTS FROM THE INSTALLATION OPERATIONS OR WHICH HAPPENS AFTER TOTAL OR PARTIAL TAMPERING WITH THESE (E.G. DISCONNECTION, EVEN PARTIAL, OF THE ELECTRICAL LEADS, OPENING THE GENERATOR DOOR, DISMANTLING OF PART OF THE BURNER).

NEVER OPEN OR DISMANTLE ANY COMPONENT OF THE MACHINE EXCEPT FOR ITS MAINTENANCE.

TO SECURE THE MACHINE, ACT ON THE ISOLATOR SWITCH. IN CASE OF ANOMALIES THAT REQUIRED A SHUT DOWN OF THE BURNER, IT'S POSSIBLE TO ACT ON THE AUXILIARY LINE SWITCH, LOCATED ON THE BURNER FRONT PANEL.

IN CASE OF A BURNER SHUT-DOWN, RESET THE CONTROL BOX BY MEANS OF THE RESET PUSHBUTTON. IF A SECOND SHUT-DOWN TAKES PLACE, CALL THE TECHNICAL SERVICE, WITHOUT TRYING TO RESET FURTHER.

WARNING: DURING NORMAL OPERATION THE PARTS OF THE BURNER NEAREST TO THE GENERATOR (COUPLING FLANGE) CAN BECOME VERY HOT, AVOID TOUCHING THEM SO AS NOT TO GET BURNT.

DANGER! Be careful NOT to invert the servocontrol cables connections.

ELECTRICAL CONNECTIONS

WARNING! Respect the basic safety rules. make sure of the connection to the earthing system. do not reverse the phase and neutral connections. fit a differential thermal magnet switch adequate for connection to the mains.

WARNING! before executing the electrical connections, pay attention to turn the plant's switch to OFF and be sure that the burner's main switch is in 0 position (OFF) too. Read carefully the chapter "WARNINGS", and the "Electrical connections" section.

ATTENTION: Connecting electrical supply wires to the burner teminal block MA, be sure that the ground wire is longer than phase and neutral ones.

To execute the electrical connections, proceed as follows:

1 remove the cover from the electrical board, unscrewing the fixing screws;
2 execute the electrical connections to the supply terminal board as shown in the attached wiring diagrams;
3 check the direction of the fan motor (see next paragraph);
4 refit the panel cover.

WARNING: (only for double stage and progressive burners) The burner is provided with an electrical bridge between terminals 6 and 7; when connecting the high/low flame thermostat, remove this bridge before connecting the thermostat.

Rotation of electric motor

Once the electrical connection of the burner is executed, remember to check the rotation of the electric motor. The motor should rotate according to the "arrow" symbol on the body. In the event of wrong rotation, reverse the three-phase supply and check again the rotation of the motor.

CAUTION: check the motor thermal cut-out adjustment

NOTE: the burners are supplied for three-phase 380 V or 400 V supply, and in the case of three-phase 220 V or 230 V supply it is necessary to modify the electrical connections into the terminal box of the electric motor and replace the overload tripped relay.

Note on elecrtical supply

In the case where the power supply of the AUXILIARIES of the phase-phase burner (without a neutral), for the flame detection it is necessary to connect the RC circuit Siemens between the terminal 2 (terminal X3-04-4 in case of LMV2x, LMV3x, LMV5x, LME7x) of the base and the earth terminal, RC466890660. For LMV5 control box, please refer to the clabeling recommendations avaible on the Siemens CD attached to the burner.

Key

C - Capacitor (22nF/250V)
LME / LMV - Siemens control box
R - Resistor (1MΩ)
M - Terminal 2 (LGB,LMC,LME), terminal X3-04-4 (LMV2x, LMV3x, LMV5, LME7x)
RC466890660 - RC Siemens filter

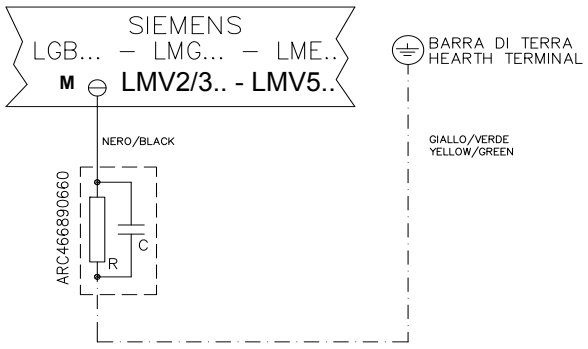

DANGER! Incorrect motor rotation can seriously damage property and injure people.WARNING: before starting the burner up, be sure that the manual cutoff valves are open and check that the pressure upstream the gas train complies the value quoted on paragraph "Technical specifications". Be sure that the mains switch is closed.

DANGER: During commissioning operations, do not let the burner operate with insufficient air flow (danger of formation of carbon monoxide); if this should happen, make the gas decrease slowly until the normal combustion values are achieved.

WARNING: never loose the sealed screws! otherwise, the device warranty will be immediately invalidate!

Fig. 12 - Burner control panel

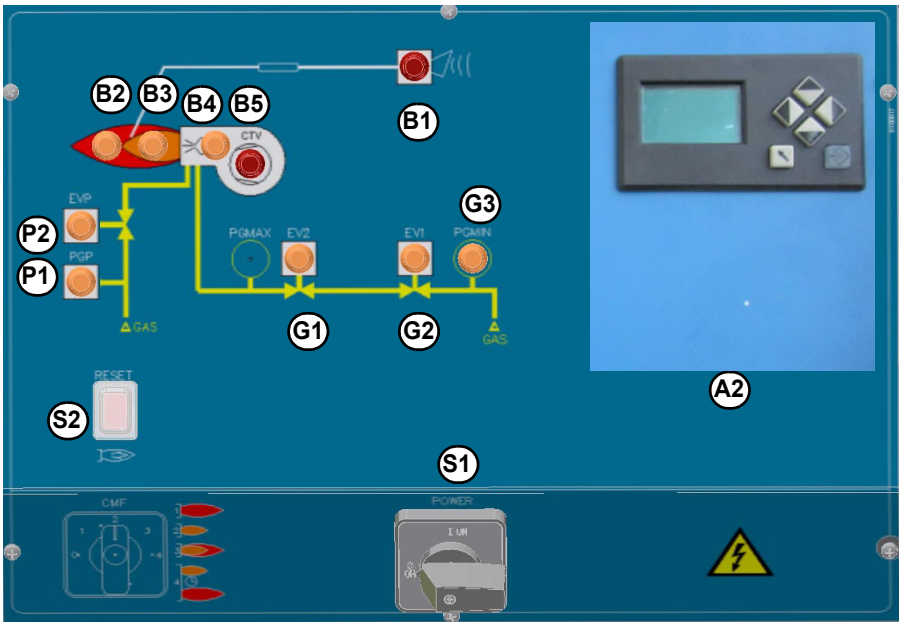

S1 Main switch
S2 Reset pushbutton for control box
S3 CMF switch (0=stop, 1=low flame, 2=high flame, 3=automatic) - fully modulating burners only
B1 Lock-out LED
B2 Hi-flame operation LED
B3 Lo-flame operation LED
B4 “Ignition transformer operation” LED
B5 “Fan motor overload tripped” LED
B6 Stand-by signalling lamp

G1 Gas valves EV2 operation signalling lamp
G2 Gas valves EV1 operation signalling lamp
G3 Gas pressure switch signal lamp
G4 Gas proving system lockout signalling lamp
A2 BT3....
P1 “Gas in the network” signalling LED (pilot)
P2 “Solenoid valve EVP operation” LED

Gas operation

- Check that the control box is not in the lockout position; in case unlock it by pressing the relevant key (for further information on the LMV.., see the related manual).
- Check that the pressure switches/thermostats series enables the burner operation.
- Check that the gas pressure is sufficient (signalled by an error code on the AZL.. display).
- **Burners fitted with gas proving system:** the gas proving system test begins; when the test is performed the proving system LED turns on. At the end of the test, the burner staring cycle begins: in case of leakage in a valve, the gas proving system stops the burner and the lamp **B1** turns on.
- At the beginning of the start-up cycle, the actuator drives the air damper to the maximum opening position, then the fan motor starts up: the pre-purge phase begins. During the pre-purge phase, the air damper complete opening is signalled by the light **B2** on (see front panel).
- At the end of the pre-purge, the air damper is driven to the ignition position, the ignition transformer is energised (signalled by the light **B4** on the front panel) then, few seconds later, the EV1 and EV2 gas valves are energised (light G1 and G2 on the front panel).
- Few seconds after the gas valves opening, the ignition transformer is de-energised and light **B4** turns to off.
- The burner operates in the low flame stage; few seconds later the two-stages operation begins and the burner output increases or decreases, driven by the external thermostats (progressive burners) or by the modulator (fully-modulating burners).

.

AIR FLOW AND FUEL ADJUSTMENT

WARNING! During commissioning operations, do not let the burner operate with insufficient air flow (danger of formation of carbon monoxide); if this should happen, make the fuel decrease slowly until the normal combustion values are achieved.
WARNING! the combustion air excess must be adjusted according to the values in the following chart.

Recommended combustion parameters		
Fuel	Recommended (%) CO_2	Recommended (%) O_2
Natural gas	9 ÷ 10	3 ÷ 4.8

(First) Start-up preliminary operations - gas supply

Recommended actions to be carried out in sequence:

1 Check the burner and all its components are installed correctly
2 Check that all electrical and mechanical parts are connected correctly
3 Check that there is water or other vector fluids in the generator
4 Check that the ventilation gates/dampers in the plant are open and the stack is free
5 Connect the gauges used to adjust and check pressures on the incoming line and on the head, air and fuel side.
6 Open the thermostatic series and the safety chain
7 Turn the main switch on the panel front with the "MAN/AUTO" selector to position "0".
8 Select the GAS mode with the fuel selector on the front of the panel (if any)
9 Check the phase and neutral position is correct
10 Open the manual shut-off valves slowly, in order to prevent any water hammers that might seriously damage valves and pressure regulator
11 Check the sense of rotation of the electrical motors
12 Bleed the line, getting rid of all the air in the pipe as far as the main gas valve
13 Ensure the pressure entering the main valves is not excessive due to damage to or wrong adjustment of the line pressure regulator
14 Ensure the gas supply minimum pressure is at least equal to the pressure required by the pressure curves - burnt gas flow

DANGER! Venting the air from the piping must take place in safe conditions, avoiding dangerous concentrations of fuel in the rooms. You must therefore ventilate the rooms and wait long enough for the gases to dissipate outside before switching on.

Adjustments - brief description

The air and fuel rates adjustments must be performed at the maximum ouptput first (“high flame”): see the Lamtec.. related manual..

- Check that the combustion parameters are in the suggested limits.
- Check the flow rate measuring it on the counter or, if it was not possible, verifying the combustion head pressure by means of a differential pressure gauge, as described on par. “Measuring the gas pressure in the combustion head”.
- Then, adjust the combustion values by setting the “gas/air” ratio” curvepoints (see the Lamtec.. related manual).
- Set, now, the low flame output, in order to avoid the low flame output increasing too much or that the flues temperature gets too low to cause condensation in the chimney.

SETTING THE BURNER CURVE

Initial home page: keep thermostat open.
Burner remain in stand-by

Unlock the controller: press ENTER

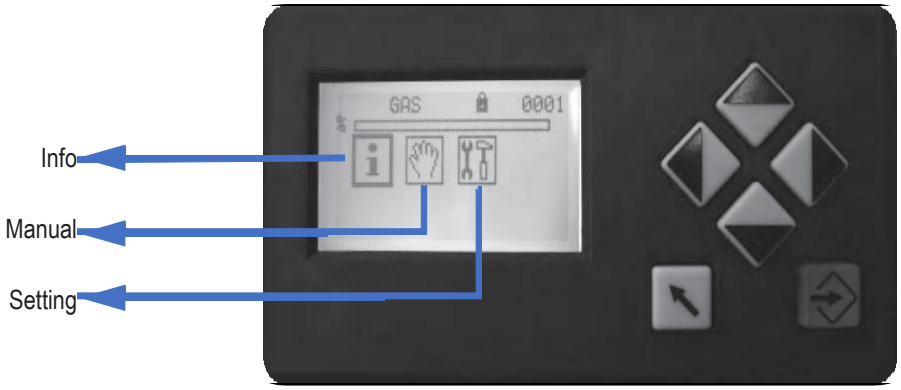

Press the right key to position on the Settings icon (indicated with wrench and hammer)

Press ENTER

Press ENTER again after selecting 'the key icon '.

Keep the password “0000“ and confirm with ENTER.

New page, level 1 unlocked

Right click to EDIT.

Press ENTER to enter the “curves page”.

Air & gas position at burner's ignition

1 ignition position

2 air servomotor position (digit)

3 gas servomotor position (digit)

VALUES VARY FROM BURNER TO BURNER

Close the thermostat the burner starts.

Pre-purge.

The controller moves the servomotors to the ignition position and excites the ignition transformer.

If the burner starts with those settings, this page will appear:

If the burner does not start with those settings the chapter "SETTING THE IGNITION POINT WITH BURNER IN STAND-BY"

SETTING THE IGNITION POINT WITH BURNER IN STAND BY

In case of troubles, the burner will go on lock-out mode and the reason will be indicated on the display.

Check the lock code & press ENTER to unlock.

Press ENTER to modify the positions (burner in stand-by).

Click up to increase the gas opening position or down to decrease it.

Right click to move from gas servomotor adjustment to air servomotor adjustment.

Clickup to increase the air opening position or down to decrease it.

Press ENTER to save the new settings.

CLOSE THE THERMOSTAT LINE

BURNER OPERATING: SETTING PARAMETERS

Check the combustion quality (with a flue gas analyzer). To modify the combustion valves and adjust servomotors position (gas and air), press ENTER.

Click up to increase the gas opening position or down to decrease it.

Right click to move from gas servomotor adjustment to air servomotor adjustment.

Click up to increase the air opening position or down to decrease it.

Press ENTER to save the new settings.

Click up to quit the ignition position.

Check the combustion quality in all positions (from minimum to maximum output) and adjust the gas and air setting if necessary (as indicated on chapter “SETTING THE IGNITION POINT WITH BURNER IN STAND-BY”).

Set the maximum load position 999, according to the maximum output required by the boiler. If necessary, set the inlet gas pressure (at the exit of the gas pressure reducer). Check the output combustible and the quality of combustion in all positions and adjust gas and air if necessary (see chapter “SETTING THE IGNITION POINT WITH BURNER IN STAND-BY”).

Press EXIT to quit the combustion settings.

Press EXIT again to quit main menu.

Press EXIT again to quit settings.

The burner runs now in automatic mode.

In case of troubles, the burner will go on lock-out mode and thereason will be indicated on the display.
Exemple:
H009 – lock-out code
D1 - diagnostic 1
D2 - diagnostic 2
xxh - operation hours

Check the lock code & press ENTER to unlock.

If the ignition setting is not good enough (e.g. too much air), the burner cannot start. In that case adjust again the ignition point see chapter “SETTING THE BURNER CURVE”.
Otherwise make sure that no other reason may cause the ignition failure.

CAUTION! The fuel air calibration procedure is the same for both gas and diesel. In the display will be indicated Gas or Diesel.

ADJUSTMENTS FOR GAS OPERATION

Air flow and gas adjustment

- startup the burner by selecting GAS by means of the switch on the burner control panel
- Adjust the air and gas flow rates, in according to the “air/gas ratio” curvepoints setting procedure on the LMV manual,. Check continuosly, the flue gas analisys, to avoid combustion with air excess.
- Once the butterfly valve is completely opened, acting on the pressure stabiliser of the valves group, adjust the **gas flow rate in the high flame stage** as to meet the values requested by the boiler/utilisation:
- If necessary, change the combusiton head positionl.
- The air and gas flow rate are now adjusted at the maximum power stage: go on with the point to point adjustement, as to reach the minimum output
- Adjust the pressure switches

Gas valves Siemens VGD - Version with SKP2.(provided with pressure stabilizer).

To increase or decrease gas pressure, and therefore gas flow rate, remove the cap **T** and use a screwdriver to adjust the regulating screw **VR**. Turn clockwise to increase the flow rate, counterclockwise to reduce it.

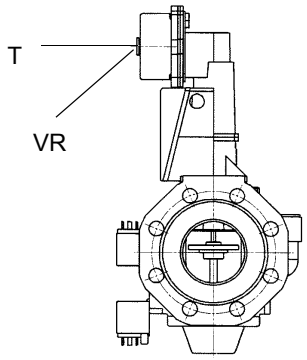

Calibration air and gas pressure switches

The **air pressure switch** locks the control box if the air pressure is not the one requested. If it happens, unlock the burner by means of the control box unlock pushbutton, placed on the burner control panel.

The **gas pressure switches** check the pressure to avoid the burner operate when the pressure value is not in the requested pressure range.

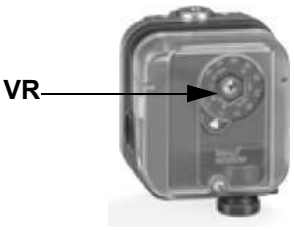

Calibration of low gas pressure switch

As for the gas pressure switch calibration, proceed as follows:

- Be sure that the filter is clean.
- Remove the transparent plastic cap.
- While the burner is operating at the maximum output, test the gas pressure on the pressure port of the minimum gas pressure switch.
- Slowly close the manual cutoff valve (placed upstream the pressure switch, see gas train installation diagram), until the detected pressure is reduced by 50%. Pay attention that the CO value in the flue gas does not increase: if the CO values are higher than the limits laid down by law, slowly open the cutoff valve as to get values lower than these limits.
- Check that the burner is operating correctly.
- Clockwise turn the pressure switch adjusting ring nut (as to increase the pressure value) until the burner stops.
- Slowly fully open the manual cutoff valve.
- Refit the transparent plastic cover on the pressure switch.

Calibration the maximum gas pressure switch (when provided)

To calibrate the maximum pressure switch, proceed as follows according to its mounting position:

- remove the pressure switch plastic cover;
- if the maximum pressure switch is mounted upstreaam the gas valves: measure the gas pressure in the network, when flame is off; by means of the adjusting ring nut **VR**, set the value read, increased by the 30%.
- if the maximum pressure switch is mounted downstream the “gas governor-gas valves” group and upstream the butterfly valve: light the burner, adjust it according to the procedure in the previous paragrph. Then, measure the gas pressure at the operating flow rate, downstream the “gas governor-gas valves” group and upstream the butterfly valve; by means of the adjusting ring nut **VR**, set the value read on step 2, increased by the 30%;
- replace the plastic cover.

Calibration of air pressure switch

To calibrate the air pressure switch, proceed as follows:

- Remove the transparent plastic cap.
- Once air and fuel setting have been accomplished, startup the burner.
- During the pre-purge phase o the operation, turn slowly the adjusting ring nut **VR** in the clockwise direction (to increase the adjusting pressure) until the burner lockout, then read the value on the pressure switch scale and set it to a value reduced by 15%.
- Repeat the ignition cycle of the burner and check it runs properly.
- Refit the transparent plastic cover on the pressure switch.

Calibration gas leakage pressure switch (PGCP)

- remove the pressure switch plastic cover;
- adjust the PGCP pressure switch to the same value set for the minimum gas pressure switch;
- replace the plastic cover.

Adjusting the combustion head

Attention! if it is necessary to change the head position, repeat the air and fuel adjustments described above.

.The combustion head position affects the flame stability.The diffuser position must be set during the commissioning according to the regulation needs. The diffuser position is factory set as shown in figure ”A” (x = 10 mm). If different settings are required, it is possible to change the position: loosen the VB screw and slightly move the combustion head backwards, turning clockwise the knob VRT. Fasten VB screw when the adjustment is accomplished.

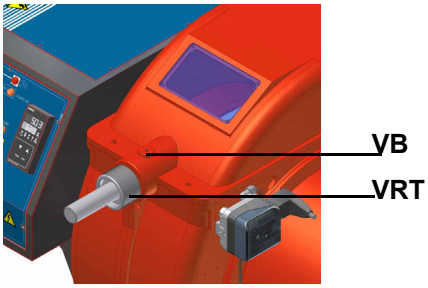

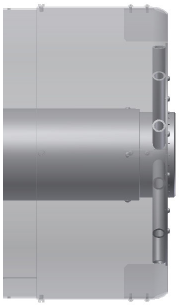

“all-ahead” position

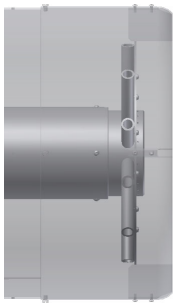

“all-backwards” head position

Depending on the boiler application, it is possible to act on the holes (figure B) to improve the flame stability and NOx, CO emission values. If necessary, close/open the holes in figure “B” using the screws kit given with the burner.

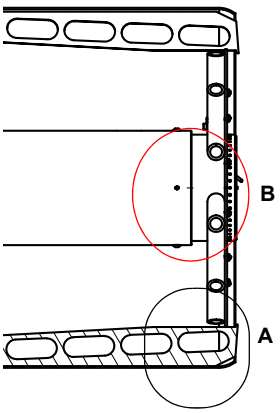

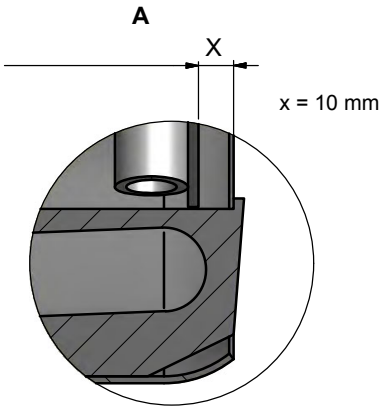

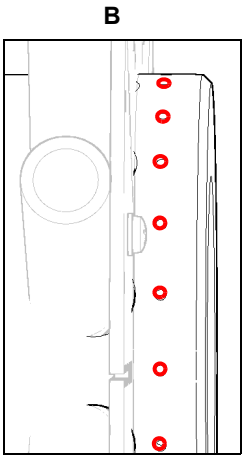

PART IV: MAINTENANCE

At least once a year carry out the maintenance operations listed below. In the case of seasonal servicing, it is recommended to carry out the maintenance at the end of each heating season; in the case of continuous operation the maintenance is carried out every 6 months.

WARNING: ALL OPERATIONS ON THE BURNER MUST BE CARRIED OUT WITH THE MAINS DISCONNECTED AND THE FUEL MANAUL CUTOFF VALVES CLOSED!
ATTENTION: READ CAREFULLY THE "WARNINGS" CHAPTER AT THE BEGINNIG OF THIS MANUAL.

ROUTINE MAINTENANCE

- Check that the gas meter is not moving when the burner is off. In case it is rotating, look for possible leaks.
- Check the cleaning condition of the vent. Clean the vent by using exclusively a dry brush. If needed, disassemble it from the motor's shaft and wash it by using non corrosive detergents. Prior to disassemble the vent, take the measurements in relation to the motor's shaft, so as to reassemble it in the same position.
- Check that all parts in contact with combustive air (air box, protection mesh and Archimedean screw) are clean and free from any obstruction that might impede free afflux. Clean it with compressed air if available and/or a dry brush or cloths. Eventually wash it with non corrosive detergents.
- Check the blast tube; it must be substituted in case of obvious cracks or anomalous holes. Slight deformations that do not affect combustion may be tolerated
- Check the condition of the burner-boiler gasket. Eventually substitute it.
- Check the fan's motor: no specific maintenance is needed. In case of anomalous noises when running, check the condition of the bearings and eventually substitute them or completely substitute the motor.
- Clean and examine the gas filter cartridge and replace it if necesssary;
- Remove and clean the combustion head;
- Examine and clean the ignition electrodes, adjust and replace them if necessary;
- Examine and clean the detection electrode/photoelement (according to the burner models), replace it if necessary, in case of doubt, check the detection circuit, after the burner start-up;
- Clean and grease leverages and rotating parts.
- At least every 2 months, or more often if needed, clean the room where the burner is installed.
- Avoid leaving installations, papers, nylon bags, etc., inside the room. They could be sucked by the burner and cause malfunctioning.
- Check that the room's vents are free from obstructions.

ATTENTIONwhen servicing, if it was necessary to disassemble the gas train parts, remember to execute the gas proving test, once the gas train is reassembled, according to the procedure imposed by the law in force.

Gas filter maintenance

WARNING: Before opening the filter, close the manual cutoff valve downstream the filter and bleed the gas; check that inside the filter there is no pressurised gas.

To clean or remove the filter, proceed as follows:

1 remove the cap unscrewing the fixing screws (A);
2 remove the filtering cartridge (B), clean it using water and soap, blow it with compressed air(or replace it, if necessary)
3 replace the cartridge in its proper position taking care to place it inbetween the guides as not to hamper the cap replacement;
4 be sure to replace the “O” ring into its place (C) and replace the cover fastening by the proper screws (A).

A

B

C

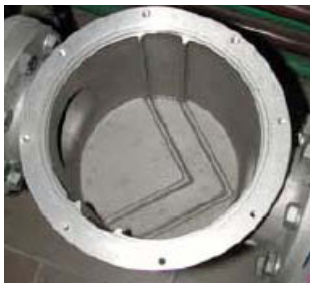

DANGER! Do not invert the servomotor cables.

Replacing the spring in the gas valve group (SKP25)

To replace the spring in the gas valve group, proceed as follows:

1 Carefully twist the protection cap 1 and the O-ring 2
2 Remove the “set value” spring 3 from actuator housing
3 Replace spring 3.
4 Carefully insert the new “set value” spring. Pay attention to mount properly. First insert the spring part with smaller diameter in the housing.
5 Place O-ring 2 in protective cap 1. Screw in the protective cap with the Oring in it.
6 Stick the adhesive label for spring identification on the type plate.

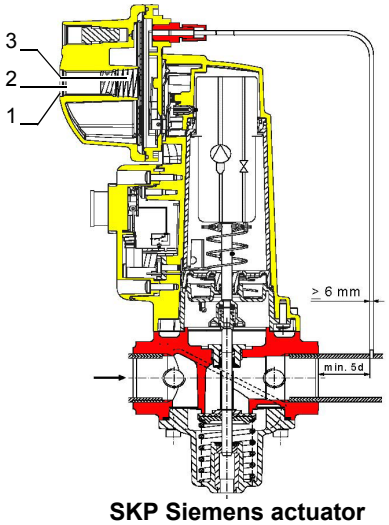

SKP Siemens actuator

Removing the combustion head

Attention: before adjusting the combustion head, turn the burner off and wait until it gets cold.

- Remove the cover **C**.
- remove the electrodes cables;
- unscrew the 3 screws **V** which hold in position the gas manifold **G** and pull out the complete group as shown in the picture below.
- Clean the combustion head by a compressed air blow or, in case of scale, scrape it off by a scratchbrush.

Note: to replace the combustion head reverse the procedure described above having care to place correctly the O ring (**OR**) between burner and gas manifold.

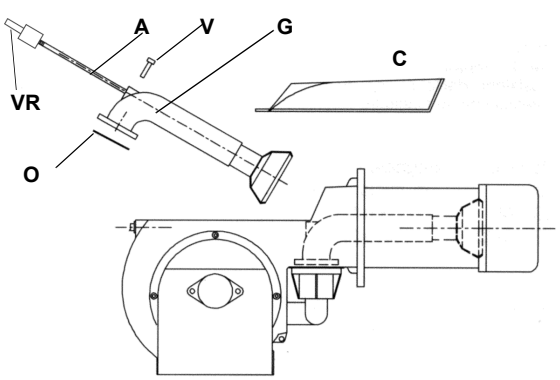

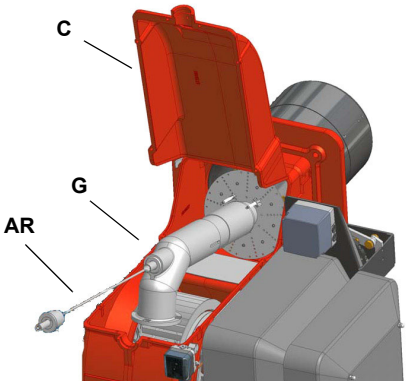

Key

VRT	Head adjusting screw
AR	Threaded rod
V	Fixing screw
G	Gas manifold
OR	"O" ring
C	Cover

Checking the detection current

To check the detection signal follow the scheme in the picture below. If the signal is less than the value indicated, check the position of the detection electrode or detector, the electrical contacts and, if necessary, replace the electrode or the detector.

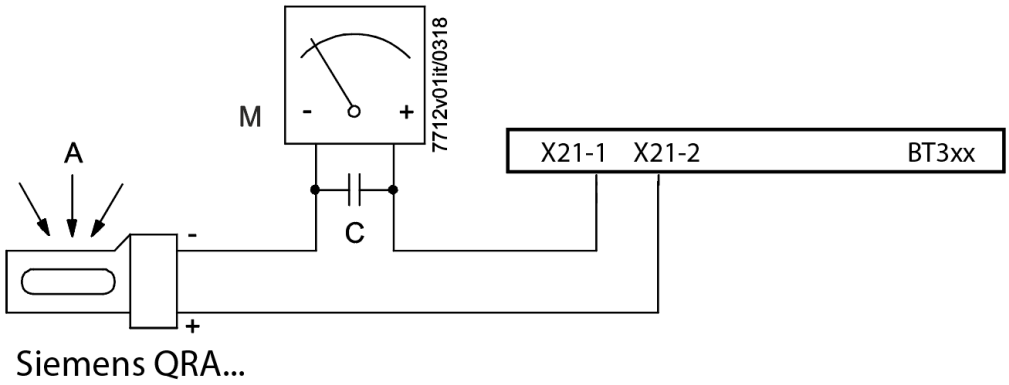

Replacing the ignition electrode

ATTENTION: avoid the electrode to get in touch with metallic parts (blast tube, head, etc.), otherwise the boiler operation would be compromised. Check the electrode position after any intervention on the combustion head.

To replace the ignition electrode, proceed as follows:

1 remove the burner cover
2 disconnect the electrode (E) cable (CE);
3 remove the combustion head (see par. “Removing the combustion head”);
4 loose screw (B) that fasten the ignition electrode (E) to the burner pilot (P);
5 remove the electrode and replace it, referring to the values quoted on figure.

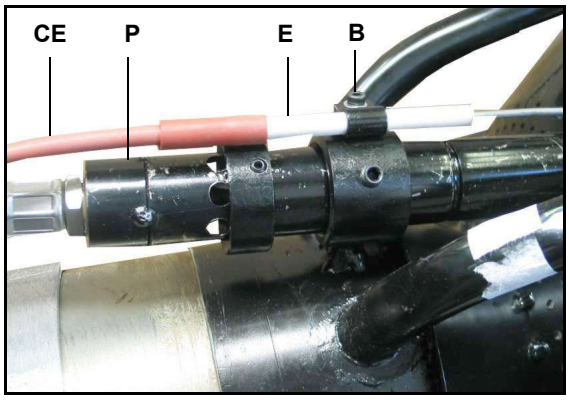

Ignition pilot electrode positions

ATTENTION: avoid the ignition and detection electrodes to contact metallic parts (blast tube, head, etc.), otherwise the boiler’s operation would be compromised. Check the electrodes position after any intervention on the combustion head.

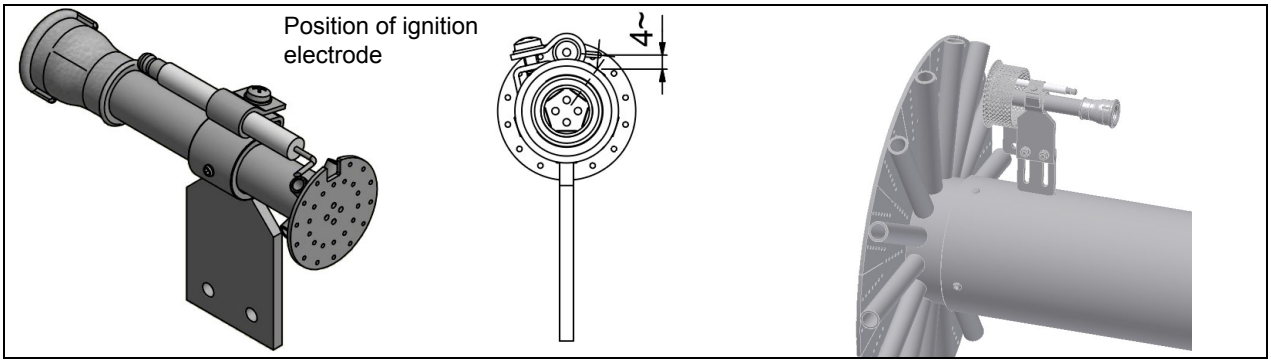

Seasonal stop

To stop the burner in the seasonal stop, proceed as follows:

1 turn the burner main switch to 0 (Off position)
2 disconnect the power mains
3 close the fuel valve of the supply line

Burner disposal

In case of disposal, follow the instructions according to the laws in force in your country about the “Disposal of materials”.

TROUBLESHOOTNG GUIDE - Gas operation

BURNER DOESN'T LIGHT	* No electric power supply	* Wait until power supply is back
	* Main switch open	* Close the switch
	* Thermostats open	* Check set points and thermostat connections
	* Bad thermostat set point or broken thermostat	* Set or replace the thermostat
	* No gas pressure	* Restore gas pressure
	* Safety devices (manually operated safety thermostat or pressure switch and so on) open	* Restore safety devices; wait that boiler reaches its temperature then check safety device functionality.
	* Broken fuses	* Replace fuses. Check current absorption
	* Fan thermal contacts open (only three phases)	* Reset contacts and check current absorption
	* Burner control locked out	* Reset and check its functionality
	* Burner control damaged	* Replace burner control
GAS LEAKAGE: BURNER LOCKS OUT (NO FLAME)	* Gas flow too low	* Increase the gas flow * Check gas filter cleanness * Check butterfly valve opening when burner is starting (only Hi-Low flame and progressive)
	* Ignition electrodes discharge to ground because dirty or broken	* Clean or replace electrodes
	* Bad electrodes setting	* Check electrodes position referring to instruction manual
	* Electrical ignition cables damaged	* Replace cables
	* Bad position of cables in the ignition transformer or into the electrodes	* Improve the installation
	* Ignition transformer damaged	* Replace the transformer
BURNER LOCKS OUT WITH FLAME PRESENCE	* Bad flame detector set	
	* Flame detector damaged	* Replace or adjust flame detector
	* Bad cables of flame detector	* Check cables
	* Burner control damaged	* Replace burner control
	* Phase and neutral inverted	* Adjust connections
	* Ground missing or damaged	* Check ground continuity
	* Voltage on neutral	* Take off tension on neutral
	* Too small flame (due to not much gas)	* Adjust gas flow * Check gas filter cleanness
	* Too much combustion air	* Adjust air flow rate
BURNER CONTINUES TO PERFORM PRE-PURGE	* Burner control damaged	* Replace burner control
	* Air servomotor damaged	* Replace servomotor
BURNER CONTINUES TO PERFORM ALL ITS FEATURES WITHOUT IGNITING THE BURNER	* Air pressure switch damaged or bad links	* Check air pressure switch functions and links
	* Burner control damaged	* Replace burner control
BURNER LOCKS OUT WITHOUT ANY GAS FLOW	* Gas valves don't open	* Check voltage on valves; if necessary replace valve or the burner control * Check if the gas pressure is so high that the valve cannot open
	* Gas valves completely closed	* Open valves
	* Pressure governor too closed	* Adjust the pressure governor
	* Butterfly valve too closed	* Open the butterfly valve
	* Maximum pressure switch (if installed) open.	* Check connection and functionality
	* Air pressure switch doesn't close the NO contact	* Check connections * Check pressure switch functionality
BURNER LOCKS OUT AND THE CONTROL WINDOW SHOWS A P	* Air pressure switch damaged (it keeps the stand-by position or badly set	* Check air pressure switch functionality * Reset air pressure switch
	* Air pressure switch connections wrong	* Check connections
	* Air fan damaged	* Replace motor
	* No power supply	* Reset power supply
	* Air damper too closed	* Adjust air damper position
BURNER LOCKS OUT DURING NORMAL RUNNING	* Flame detector circuit interrupted	* Check wiring * Check photocell
	* Burner control damaged	* Replace burner control
	* Maximum gas pressure switch damaged or badly set	* Reset pressure switch or replace it
WHEN STARTING THE BURNER OPENS FOR A WHILE THE VALVES AND THEN REPEATS FROM THE BEGINNINGTHE CYCLE FROM PRE-PURGE	* Gas pressure switch badly set	* Reset the pressure switch
	* Gas filter dirty	* Clean gas filter
	* Gas governor too low or damaged	* Reset or replace the governor
BURNER STANDS WHILE RUNNING WITHOUT ANY SWITCHING OF THERMOSTATS	* Thermal contacts of fan motor open	* Reset contacts and check values * Check current absorption
FAN MOTOR DOESN'T START	* Internal motor wiring broken	* Replace wiring or complete motor
	* Fan motor starter broken	* Replace starter
	* Fuses broken (three phases only)	* Replace fuses and check current absorption
BURNER DOESN'T SWITCH TO HIGH FLAME	* Hi-low flame thermostat badly set or damaged	* Reset or replace thermostat
	* Servomotor cam badly set	* Reset servomotor cam
SOMETIMES THE SERVOMOTOR RUNS IN THE WRONG WAY	* Servomotor capacitor damaged	* Replace capacitor

WIRING DIAGRAMS

Refer to the attached wiring diagrams.

WARNING

1 - Electrical supply 230V / 400V 50Hz 3N a.c.

2 - Do not reverse phase with neutral

3 - Ensure burner is properly earthed

4 - Refer to the attached document “RECOMMENDATIONS FOR LMV5x CONNECTIONS”

C.I.B. UNIGAS S.p.A.
Via L.Galvani, 9 - 35011 Campodarsego (PD) - ITALY
Tel. +39 049 9200944 - Fax +39 049 9200945/9201269
web site: www.cibunigas.it - e-mail: cibunigas@cibunigas.it

Note: specifications and data subject to change. Errors and omissions excepted.

Quick Guide

LAMTEC

BT 3**xx**

SISTEMA DI CONTROLLO ELETTRONICO
ELECTRONIC CONTROLSYSTEM
SISTEMA DE CONTROL ELECTRÓNICO
SYSTÈME DE CONTRÔLE ÉLECTRONIQUE

M12929CA 05/2018

1 SUMMARY

1 Summary 2
2 OPERATING CONTROL AND DISPLAYS 4
2.1 USER INTERFACE: 4
2.2 MENU FUNCTIONST: 4
3 MAIN MENU 6
3.1 INFORMATION MENU PATH 6
3.1.1 INFORMATION PATH: 6
3.1.2 BURNER DETAILS 7
3.1.3 Display burner start-ups 8
3.1.4 RECALL FAULT HISTORY 8
3.1.5 SOFTWARE VERSION 10
3.1.6 DISPLAY OF CHECK SUMS 10
CRC16 check sums 10
3.1.7 SERIAL NUMBER 11
3.1.8 DISPLAY POSITIONS OF ACTUATING DRIVES 11
3.1.9 CHECK DIGITAL INPUTS/OUTPUTS 12
3.1.10 DIGITAL OUTPUTS 14
3.2 MANUAL MENU PATH 16
3.2.1 Regolazione manuale % carico bruciatore 16
3.3 SETTINGS MENU PATH 17
3.3.1 ENTER PASSWORD 17
3.3.2 PROGRAM SEQUENCE 18
Set duration of pre-purge 18
Set duration of post-purge 20
Leakage test functions 20
Activate valve leakage test prior to ignition 21
Check valve leakage test after flame OFF 21
Set duration of valve leakage test 22
Activate the pilot burner in gas operation 22
Set pilot burner in oil operation 23
Configuration of actuating outputs 23
Curve setting oF actuating drives 23
Eliminare curve 25
UI300 display settings 26
3.4 OTHER DISPLAYS 26
No connection between UI300 and BT300 26
Termination 26

4 LIST OF FAULT CODES 27
5 ASSIGNMENT OF CONFIGURATION FAULT 107 30
6 ASSIGNMENT OF INTERNAL FAULT 999 31
7 SETTING THE BURNER CURVE 37
8 SETTING THE IGNITION POINT WITH BURNER IN STAND-BY 40
9 SETTING WITH BURNER ON 42
8 SETTING OF A NEW CURVE WITH VSD (optional) 45

- This Guide for quick start-up summarises the basic operations that are necessary to start up and set the BT.... control unit. The information contained here do NOT replace the user manual and are only intended for qualifie personnel in charge of control unit maintenance.
- The information contained in this catalogue is not binding The manufacturer reserves the right to change the technical data and any other data it contains.

2 OPERATING CONTROL AND DISPLAYS

2.1 USER INTERFACE:

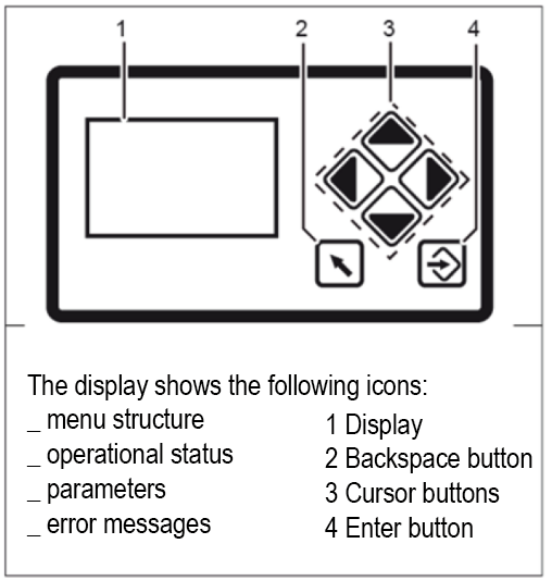

The display shows the following icons:

_ menu structure
_ operational status
_ parameters
_ error messages

1 Display
2 Backspace button
3 Cursor buttons
4 Enter button

Jump to previous window

You navigate in the menu using the cursor keys.

Enter key: For to confirm the value or operation

2.2 MENU FUNCTIONST:

Information

Select the INFO path for information about the following:
the burner
errors that have occurred
the software version
the serial number
actuating drive positions (current damper position for each channel)
digital inputs/outputs

Manual

Select the MANUAL to :
start and stop the burner manually
adjust the internal burner firing-rate

If the burner is switched on manually via display, the BT300 no longer responds to the "Burner ON" signal input at connector X10.2.
It is for this reason that the burner will turn off only with the intervention of the “safety chain”, connector X07, which will send it in lock-out!

Settings

Select the SETTINGS path for information on, and to make settings or, the following:
the password
the burner settings (display and settings)
the actuator device settings (display)
the air/fuel control system
the "delete"
the display settings

3 MAIN MENU

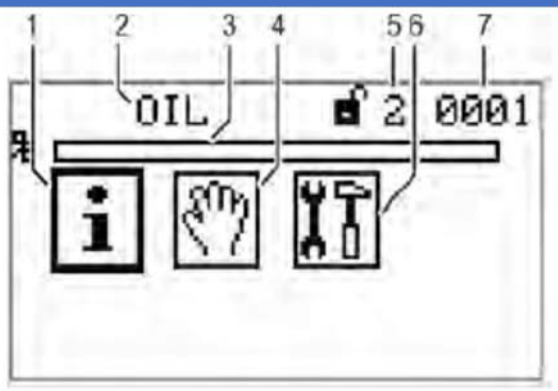

1 INFORMATION menu path [selected]
2 Display of fuel used
3 Bargraph of internal firing-rate in % (0 -100)
4 MANUAL menu path
5 Access level 2
6 SETTINGS menu path
7 Window number

3.1 INFORMATION MENU PATH

3.1.1 INFORMATION PATH:

Use the cursor keys 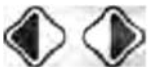 to select the path and confirm this with Enter

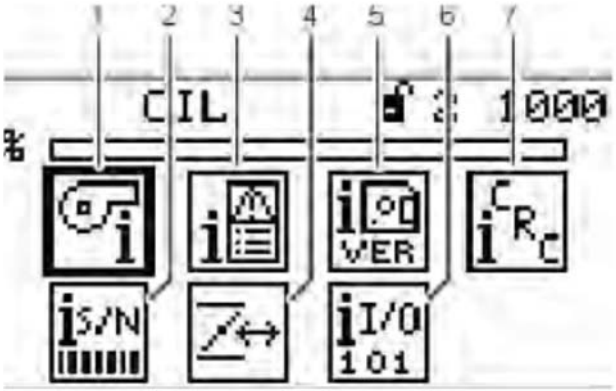

1 Selected burner information [selected]
2 Serial number
3 Fault history
4 Confguration of actual value of actuating outputs (display only)
5 Software version
6 Digital inputs/outputs
7 Check sum display

3.1.2 BURNER DETAILS

Use the cursor keys 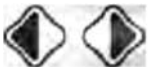 to select the path and confirm this with Enter
The display shows the "System Information" menu window.

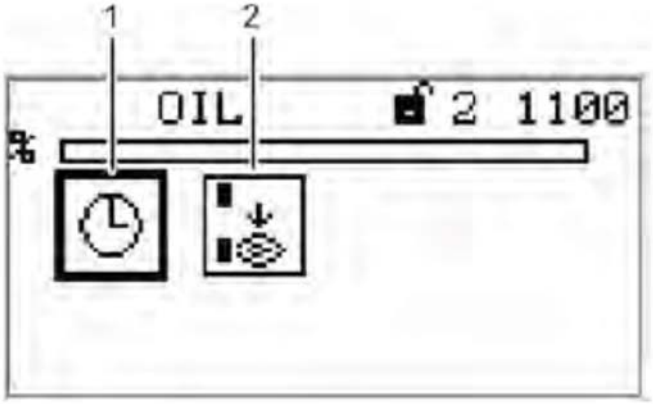

1 For display of operating hours [selected]
2 Number of burner start-ups

Use the cursor keys 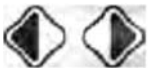 to select the path and confirm this with Enter
The display shows the "Display operating hours" menu window.

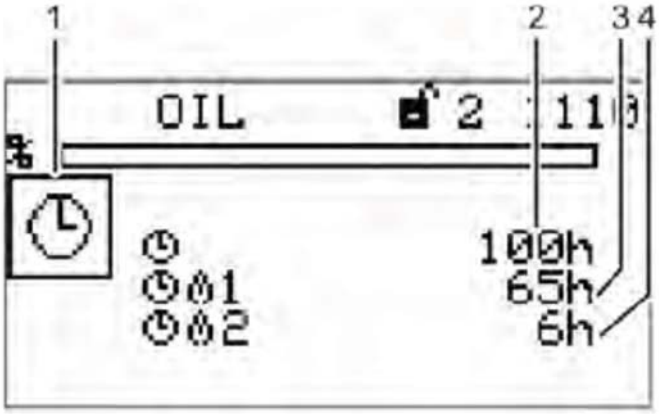

1 Pictogram operating hours
2 Total number of operating hours (device connected to mains voltage)
3 Number of operating hours, oil operation
4 Number of operating hours, gas operation

3.1.3 DISPLAY BURNER START-UPS

Use the cursor keys 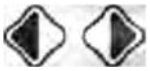 to select the path and confirm this with Enter
The display shows the "Start-up counter" menu window

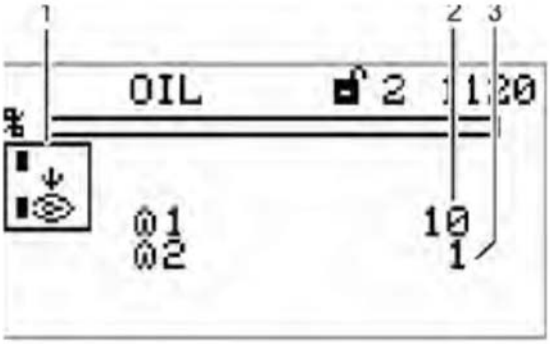

1 Pictogram burner start-up
2 Number of burner start-ups, oil operation
3 Number of burner start-ups, gas operation

3.1.4 RECALL FAULT HISTORY

From the home screen, use the cursor keys 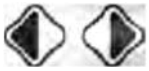 to select the path and confirm with Enter

Use again the cursor keys 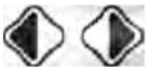 to select the path and confirm this with Enter

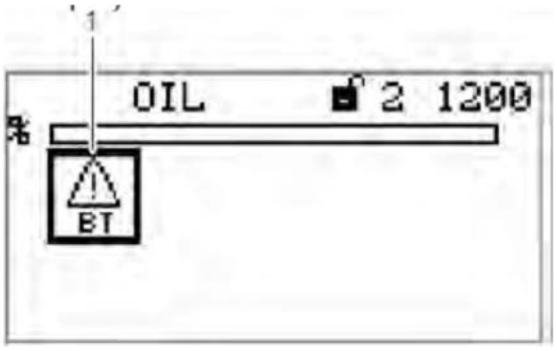

Fault history selection menu

Use the cursor keys 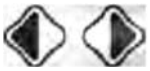 to select the path and confirm this with Enter

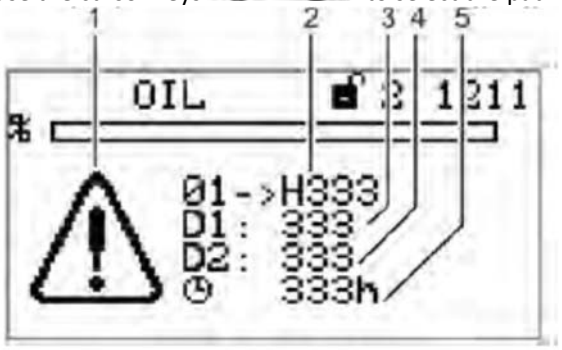

1 Error code-display pictogram
2 Fault code (the last 10 faults are stored, in which no. 01 is the most recent fault)
3 Diagnostic code 1
4 Diagnostic code 2
5 Number of operating hours at the moment, the fault occurs

3.1.5 SOFTWARE VERSION

Use the cursor keys 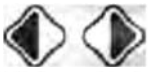 to select the path and confirm this with Enter

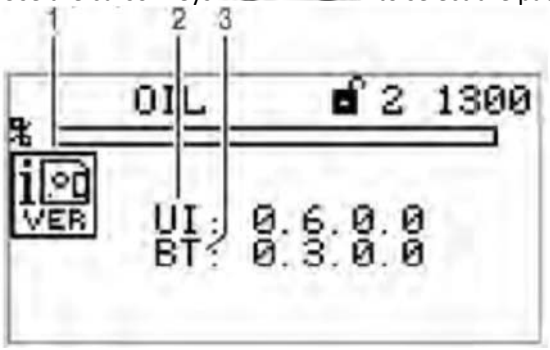

1 Software version pictogram
2 UI300 software version (user interface)
3 BT3xx software version (BurnerTronic)

3.1.6 DISPLAY OF CHECK SUMS

Use the cursor keys 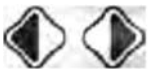 to select the path and confirm this with Enter

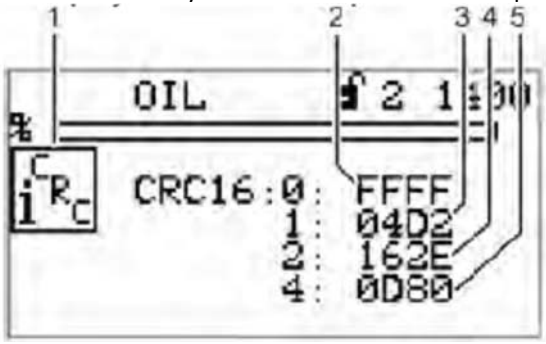

1 Check sums pictogram
2 Check sum, access level 0
3 Check sum, access level 1
4 Check sum, access level 2
5 Check sum, access level 4

CRC16 CHECK SUMS

The check sums are formed from the device parameters. In each case, the BT3xx calculates a check sum for the parameters from access levels 0, 1, 2 and 4. This is displayed as a hex-adecimal value. The check sums are used to determine whether or not the value for one or more parameters present in the corresponding access level has been changed.

3.1.7 SERIAL NUMBER

(device BT3xx and display UI300)

Use the cursor keys 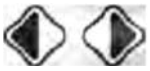 to select the path and confirm this with Enter

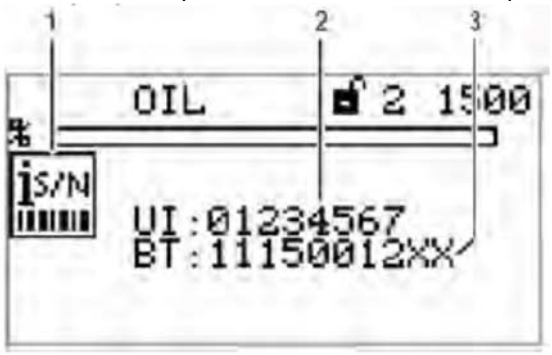

1 Serial number pictogram
2 User interface serial number UI300
3 BurnerTronic serial number BT3xx

3.1.8 DISPLAY POSITIONS OF ACTUATING DRIVES

From main page (see paragraf 2.4) use the cursor keys 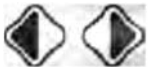 to select the path and confirm this with Enter

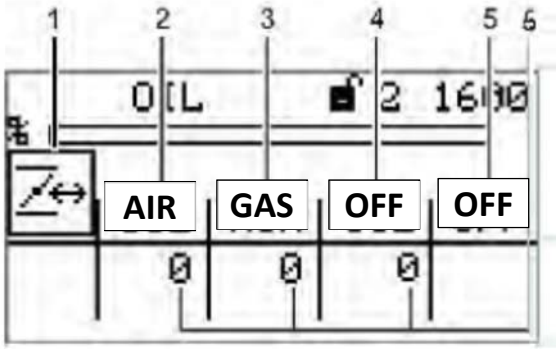

1 Actuating drive pictogram
2 Actuating drive channel 1 (air)
3 Actuating drive channel 2 (combustible)
4 Actuating drive channel 3 (off, air, FGR actuator)
5 Optional channel OFF; control of frequency converter
6 Actuatuing drive's actual position

The assignment of the channels is depending on the configuration!

3.1.9 CHECK DIGITAL INPUTS/OUTPUTS

From main page (see chapter 3) use the cursor keys to select the path and confirm this with Enter

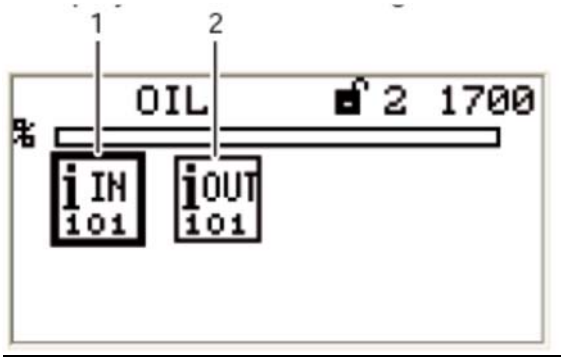

1 Digital inputs pictogram [selected]
2 Digital outputs pictogram

Select the menu and confirm this with Enter

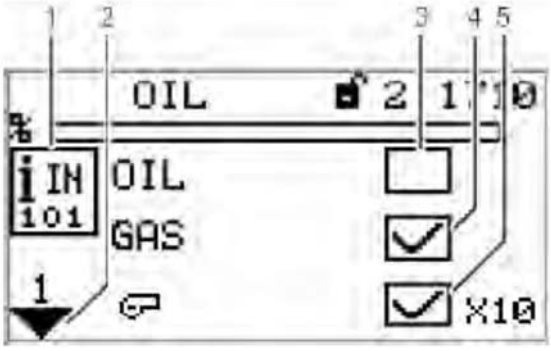

Page 1 of inputs menu

1 Digital inputs pictogram
2 Jump to next page
3 Fuel selection oil [no]
4 Fuel selection gas [yes]
5 Burner start [yes] – terminal X10

The signals in points 3 and 4, "Page 1 input menu", are "logical" signals and not "physical".
Background: some signals may have more than one source (terminal, LSB, field buses, parameters).

Use the cursor key to select the next page and confirm this with Enter

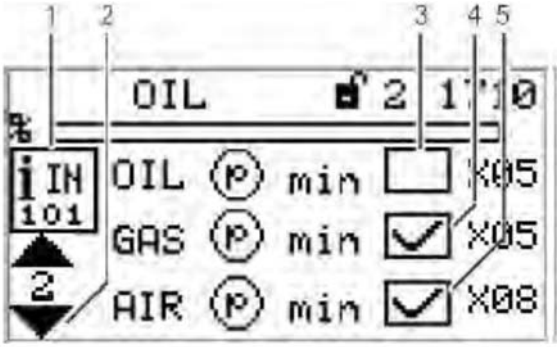

Page 2 of inputs

1 Digital inputs pictogram
2 Jump to next page
3 Oil pressure min present [no] – terminal X05
4 Gas pressure min present [yes] – terminal X05
5 Air pressure min present [yes] – terminal X08

Use the cursor key to select the next page and confirm this with Enter

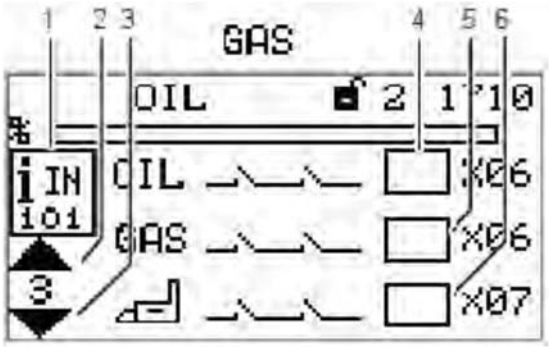

Page 3 of inputs

1 Digital inputs pictogram
2 Jump to previous page
3 Jump to next page
4 Safety interlock chain oil closed [no] – terminal X06
5 Safety interlock chain gas closed [no]
6 Safety interlock chain boiler closed [no]

The signals in points 4 and 5 in Page 2 of inputs menu are "logical" signals, not "physical". The BT3xx supports either oil or gas operation, but cannot be switched. There-fore there are no separate signals for the oil or gas safety interlock chain. The signal on terminal X06 is thus generally known as "safety interlock chain burner".

Use the cursor key to select the next page and confirm this with Enter

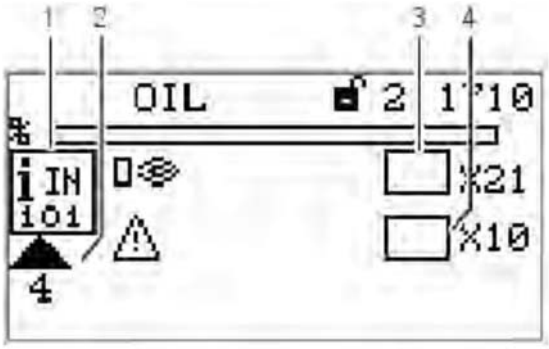

Page 4 of inputs

1 Digital inputs pictogram
2 Jump to previous page
3 Flame signal present [no] – terminal X21
4 Fault release [no] – terminal X10

3.1.10 DIGITAL OUTPUTS

From previous page (see chapter 3) use the cursor keys to select OUT 101 and confirm this with Enter

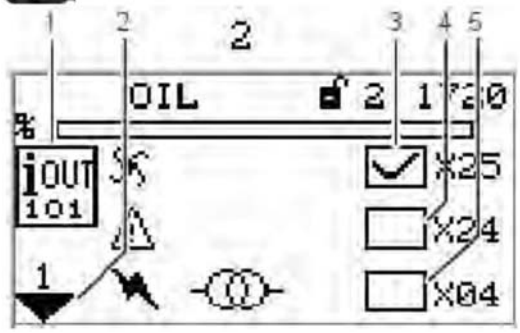

Page 1 digital outputs

1 Digital outputs pictogram
2 Jump to next page
3 Fan [on] – terminal X25
4 Error [off] – terminal X24 (adjustable with P 809)
5 Ignition transformer [off] – terminal X04

Use the cursor key to select the next page and confirm this with Enter

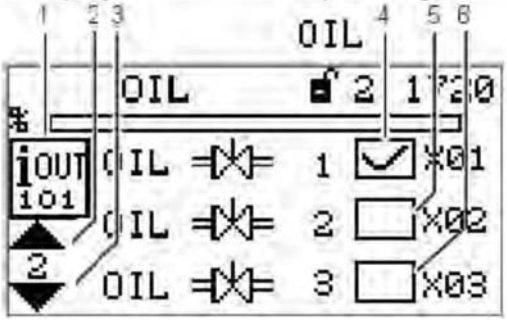

Page 2 digital outputs

1 Digital outputs pictogram
2 Jump to previous page
3 Jump to next page
4 Oil valve 1 [on] – terminal X01
5 Oil valve 2 [off] – terminal X02
6 Oil valve 3 [off] – terminal X03

Use the cursor key to select the next page and confirm this with Enter

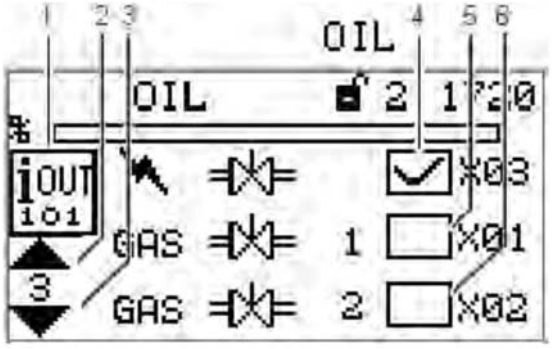

Page 3 digital outputs

1 Digital outputs pictogram
2 Jump to previous page
3 Jump to next page
4 Ignition valve [on] – terminal X03
5 Gas valve 1 [off] – terminal X01
6 Gas valve 2 [off] – terminal X02

Use the cursor key to select the next page and confirm this with Enter

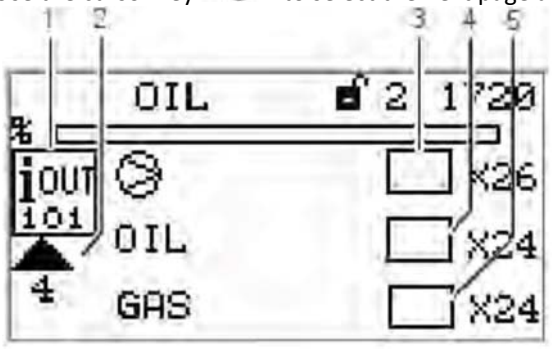

Page 4 digital outputs

1 Digital outputs pictogram
2 Jump to previous page
3 Oil pump [off] – terminal X26
4 Fuel selection oil [off] – terminal X24 (adjustable with P 809)
5 Fuel selection gas [off] – terminal X24 (adjustable with P 809)

3.2 MANUAL MENU PATH

From previous page (see chapter 3) use the cursor keys 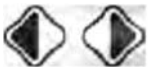 to select and confirm this with Enter

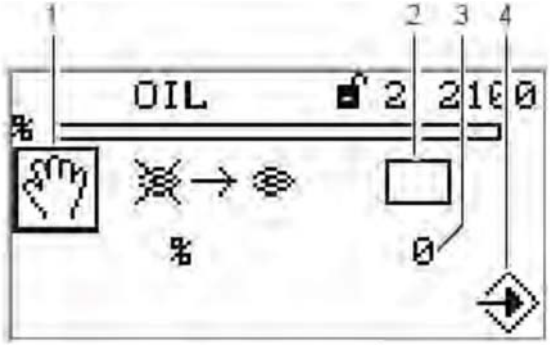

1 Pictogram Manual
2 Start burner manually [off]
3 Adjust burner manual output
4 Pictogram confirm settings

The "Burner ON" control loop does not need to be switched on to start the burner from this menu. The user interface assumes control in this menu. If there is no contact with "Burner ON" signal from other sources (terminal X10.2), the software switches off the burner when you exit the menu.

If the burner is switched on manually via display, the BT300 no longer responds to the "Burner ON" signal input at connector X10.2. It is for this reason that limiters, monitors and other similar safety functions must not be used with this input!

Leaving the window terminates burner operation!

3.2.1 REGOLAZIONE MANUALE % CARICO BRUCIATORE

Use the cursor keys 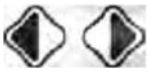 to select the adjustment of the burner firing-rate in % and confirm this selection with Enter

Please note, that you can adjust the burner firing-rate only while burner is running. Start the burner before you adjust the burner firing-rate as mentioned above.

3.3 SETTINGS MENU PATH

From previous page (see chapter 3) use the cursor keys 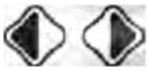 to select and confirm this with Enter

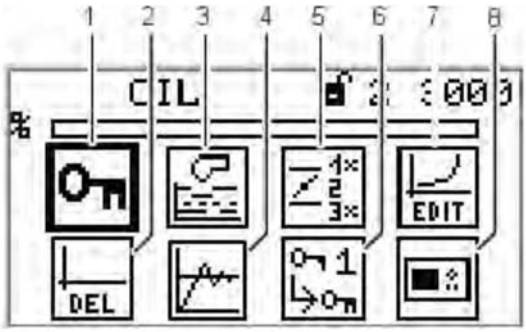

1 Password pictogram (selected)
2 Delete curves
3 Display program settings
4 Setting modulating controller (module LCM100)
5 Read out actuating outputs configuratio
6 Password settings
7 Curve settings
8 Display settings

3.3.1 ENTER PASSWORD

Warning:
Password level 0 = setting view
Password level 1 = change curve points
Password level 2 = changing burner parameter settings (pre-purge, gas leakage, burner parameter, PID, etc.)

Use the cursor keys 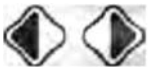 to select and confirm this with Enter

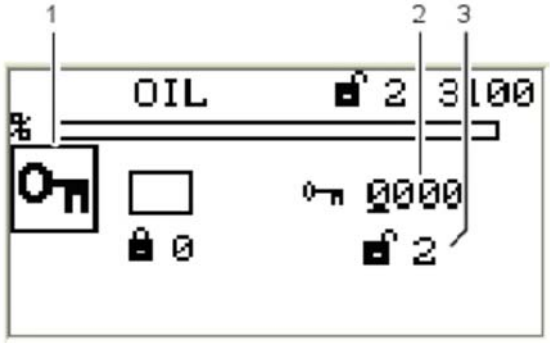

1 Password pictogram (selected)
2 Enter password
3 Access level 2 displayed with access authorisation or acces level 1 with access authorisation depending of the phases

a. Use the cursor keys 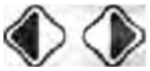 to select the password fiel you wish to change.
b. Change the number with the cursor keys .
c. Confirm the password with Enter

3.3.2 PROGRAM SEQUENCE

Use the cursor keys 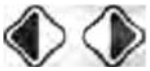 to select and confirm this with Enter

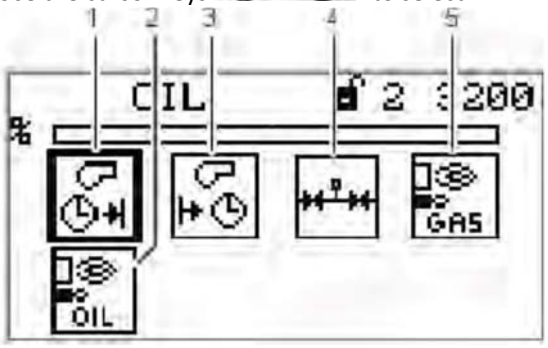

1 Duration of pre-purge [selected]
2 Pilot burner oil operation
3 Duration of post-purge
4 Valve gas leakage test
5 Pilot burner gas operation

SET DURATION OF PRE-PURGE

Use the cursor keys 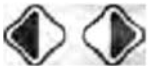 to select and confirm this with Enter

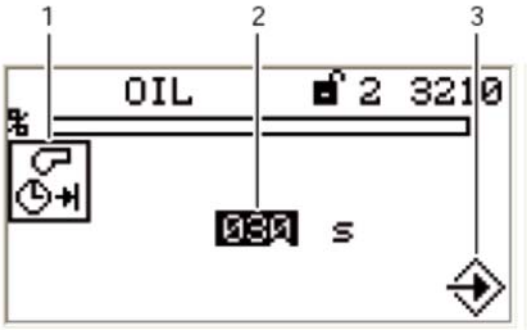

1 Duration of pre-purge pictogram
2 Pre-purge time set
3 Accept value by pressing Enter

The countdown starts for to confirm the writing value beetwen the display UI300 and burner tronic BT3xx.

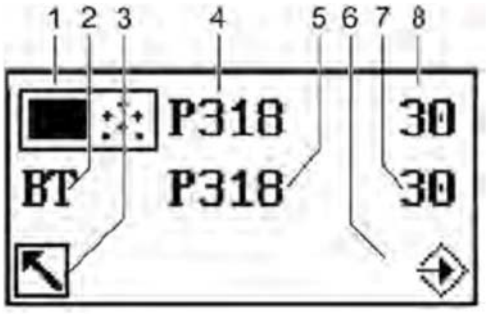

1 UI300 pictogram
2 BT3xx pictogram
3 Cancel (back)
4 Parameter number UI300
5 Parameter number BT300
6 Transfer by pressing Enter (flashing)
7 Value for UI300
8 Value for BT300

Do not accept the value until the values for UI300 and BT300 are the same! The value for the parameter has to be confirmed by pressing Enter in the space of the count-down (8s)!

a- Confirm the entry in time by pressing Enter. The value is accepted. The display shows the following page:

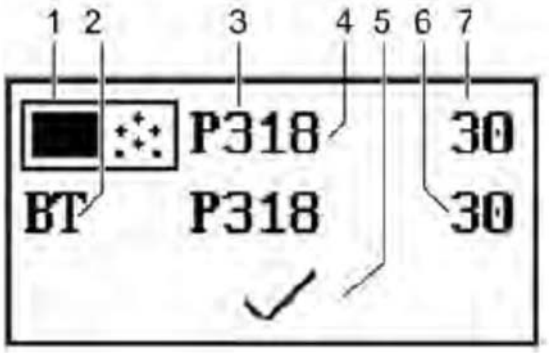

Display after successfully transferred data

1 UI300 pictogram
2 BT3xx pictogram
3 Parameter number UI300
4 Parameter number BT300
5 Pictogram discard parameters
6 Value for BT300
7 Value for UI300

If both values are equivalent, the value can be accepted by pressing Enter. If there is a discrepancy with the values, terminate the "acceptance" process.

b- Reject the change made to the parameter select the back key The change made to the parameter is not accepted. The following page appears :

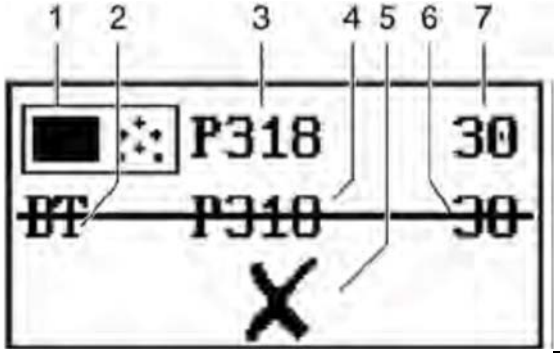

Display of invalid data transfer

1 UI300 pictogram
2 BT3xx pictogram
3 Parameter number UI300
4 Parameter number BT300
5 Discard parameters pictogram
6 Value for BT300
7 Value for UI300

*The following sequence of events for confirming or discarding the entry is exactly the same for all parameter entries. Therefore this process is no longer illustrated in detail in the following explanations for the parameter settings. You will simply find this text: "**Accept or discard the entry!**"*

SET DURATION OF POST-PURGE

Use the cursor keys 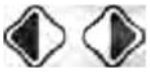 to select and confirm this with Enter

The display shows the "Duration of post-purge".

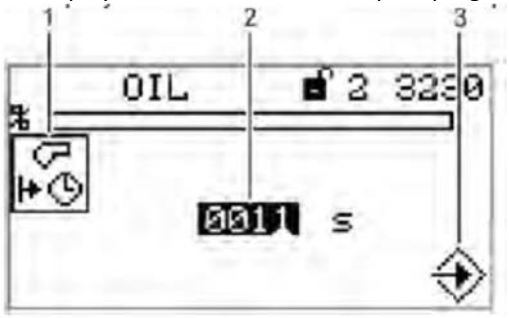

1 Duration of post-purge pictogram
2 Set duration of post-purge
3 Accept setting by pressing Enter

- Use the cursor keys 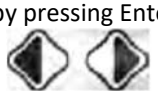 to select the number you wish to change .
- Change the value of the number with the cursor keys .
- Confirm the entry with Enter .

"Accept or discard the entry!"

LEAKAGE TEST FUNCTIONS

Use the cursor keys 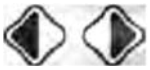 to select and confirm this with Enter

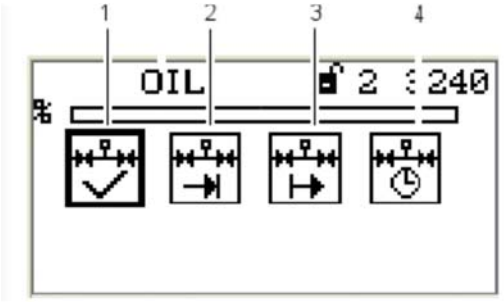

"Gas leakage" menu

1 Leakage test ON/OFF
2 Leakage test before ignition
3 Leakage test after ignition
4 Duration of leakage test

"Accept or discard the entry!"

Access level 2 is required to set this function!

ACTIVATE VALVE LEAKAGE TEST PRIOR TO IGNITION

Use the cursor keys 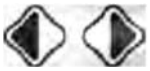 to select and confirm this with Enter

Change the ON/OFF functional state using the cursor keys and confirm this with Enter
The display shows the valve leakage test prior to ignition menu.

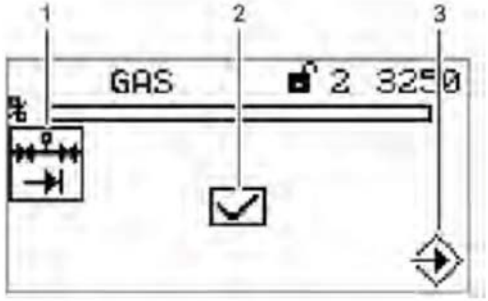

Valve leakage test prior to ignition menu

1 Valve leakage test prior to ignition pictogram
2 Display valve leakage test (active)
3 Accept setting by pressing Enter
The valve leakage test is set!

"Accept or discard the entry!"

Access level 2 is required to set this function!

CHECK VALVE LEAKAGE TEST AFTER FLAME OFF

Use the cursor keys 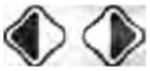 to select and confirm this with Enter

Change the ON/OFF functional state using the cursor keys and confirm this with Enter
The display shows the valve leakage test after flame OFF menu.

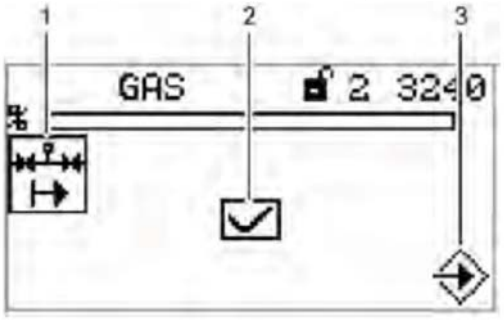

Valve leakage test after flame OFF

1 Valve leakage test after flame OFF pictogram
2 Display valve leakage test
3 Accept setting by pressing Enter
La prova di tenuta valvola è stata impostata!

"Accept or discard the entry!"

Access level 2 is required to set this function!

SET DURATION OF VALVE LEAKAGE TEST

Use the cursor keys 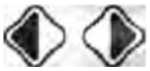 to select and confirm this with Enter

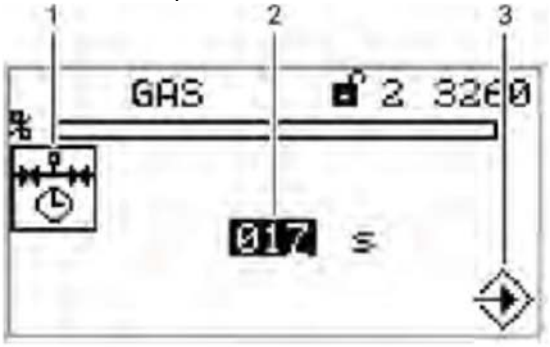

Valve leakage test menu

1 Duration of valve leakage test pictogram
2 Set duration of valve leakage test
3 Accept setting by pressing Enter

- Use the cursor keys to select the number you wish to change.
- Change the value of the number with the cursor keys
- Confirm the entry with Enter

"Accept or discard the entry!"

Access level 2 is required to set this function!

ACTIVATE THE PILOT BURNER IN GAS OPERATION

Use the cursor keys 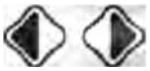 to select and confirm this with Enter

Change the ON/OFF functional state using the cursor keys and confirm this with Enter
The display shows the "pilot burner in gas operation"menu

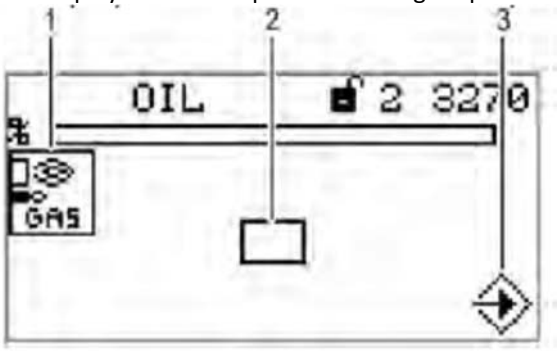

Pilot burner in gas operation menu

1 Pilot burner in gas operation pictogram
2 Activate the pilot burner in gas operation
3 Accept setting by pressing Enter

"Accept or discard the entry!"

Access level 2 is required to set this function!

SET PILOT BURNER IN OIL OPERATION

Use the cursor keys 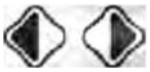 to select and confirm this with Enter

Change the ON/OFF functional state using the cursor keys and confirm this with Enter
The display shows the "pilot burner in oil operation"menu "

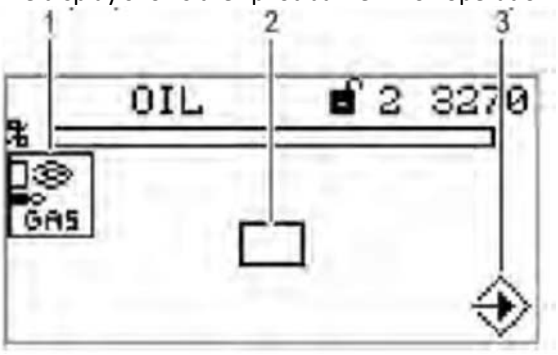

Pilot burner in oil operation menu

1 Pilot burner in oil operation pictogram
2 Activate pilot burner in oil operation
3 Accept setting by pressing Enter

“Accept or discard the entry!”

Access level 2 is required to set this function!

CONFIGURATION OF ACTUATING OUTPUTS

Use the cursor keys 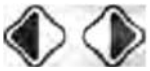 to select and confirm this with Enter

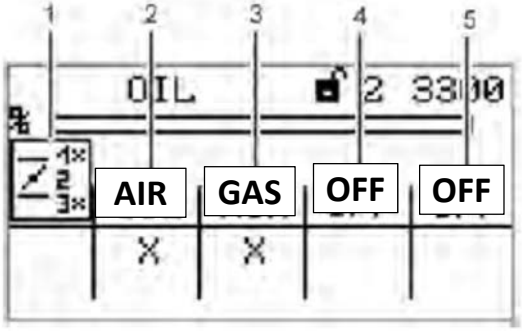

Configuration of actuating outputs menu

1 Actuating drive position pictogram
2 Display channel 1, air
3 Display channel 2, combustible
4 Display channel 3, (off, air or actuator FGR)
5 Optional channel, off

CURVE SETTING OF ACTUATING DRIVES

Use the cursor keys 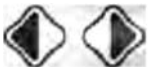 to select and confirm this with Enter

If you keep key *pressed for more than 2 seconds in the menue "Curve setting of actuating drives" you will cause a fault shut-down.*

The display shows the curve setting menu ".

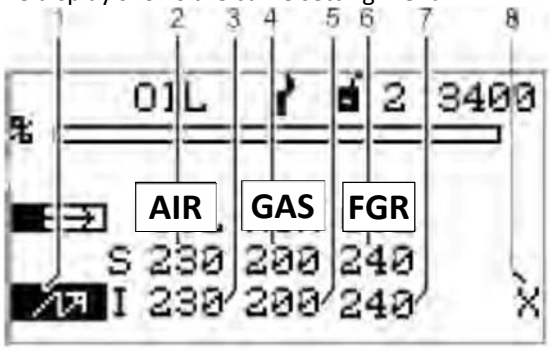

Curve setting menu

1 Ignition position firing-rate point
2 Set-point channel 1, air
3 Actual value channel 1, air
4 Set-point channel 2, combustible
5 Actual value channel 2, combustible
6 Set-point channel 3, (off, air or actuator FGR)
7 Actual value channel 3 (off, air or actuator FGR)
8 Curve data for this firing-rate point already exists

- Use the cursor keys to set the firing-rate point and confrm with Enter Set-point channel 1 is chosen (displayed in reverse).
- Use the cursor keys to set the channel's actuator position.
- Use the cursor keys to switch to the next channel.
- Use the cursor keys to set actuator's position in the selected firing-rate point.
- Set the position of the actuator at the desired combustion point with the cursor key.

The actuators run to the adjusted position immediatelly after adjusting it.

The fan motor must run to adjust channel 4.

"Accept or discard the entry!"

The display changes to the firing-rate selection menu.

T*he following firing rate point are available:*

Ignition point , 200, 250, 300, 400, 500, 600, 700, 800, 900, 999

- Set your firing rate points as described above and confirm it with Enter

If you keep key pressed for more than 2 seconds themenue "Curve setting of actuating drives" you will cause a fault shut-down.

ELIMINARE CURVE

Use the cursor keys 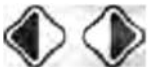 to select

and confirm this with Enter

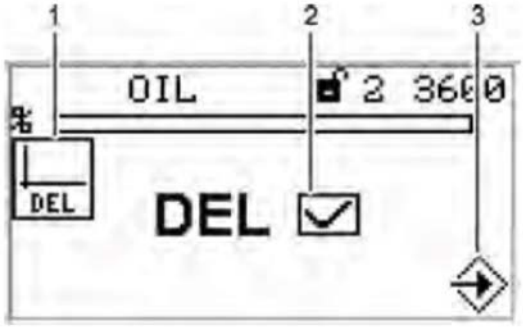

Delete curves menu

1 Delete curves pictogram
2 Delete curves selected
3 Confir deletion of curves

The display shows the "confirmation prompt".

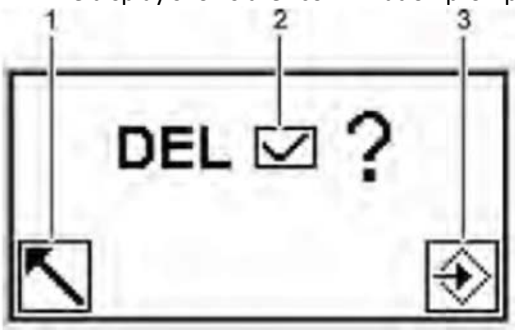

Confirmation prompt of the delete curves menu

1 Back to previous menu
2 Delete values [selected]
3 Proceed with deletion of values

Select Enter . The curve values are deleted. The display shows the "values deleted" menu.

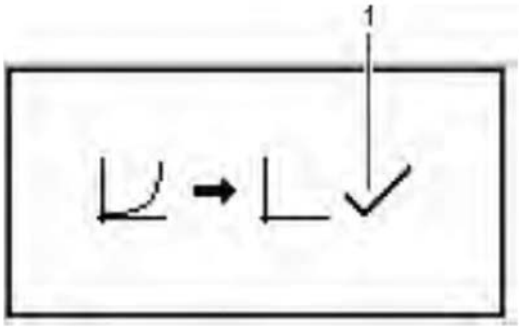

Values deleted menu

1 Values deleted

UI300 DISPLAY SETTINGS

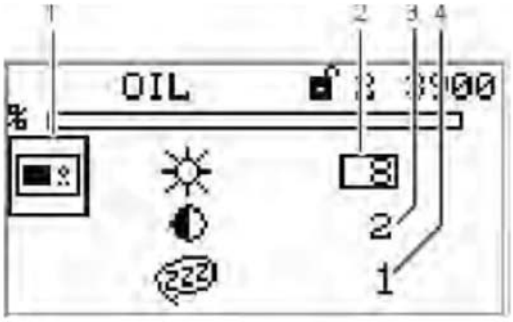

Display settings menu

1 Display settings menu
2 Brightness
3 Contrast
4 Waiting time for screen saver

A "0" value cannot be entered for the screen saver!.

3.4 OTHER DISPLAYS

NO CONNECTION BETWEEN UI300 AND BT300

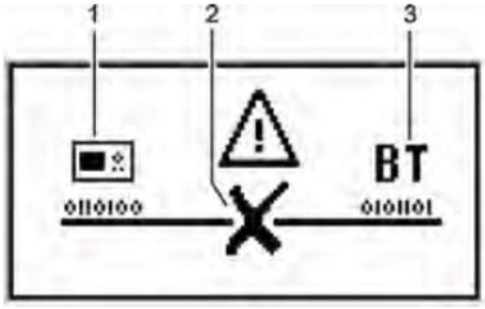

No connection

1 UI300 user interface pictogram
2 Symbol for no connection
3 BT300 burner control

Display shown e.g. when using the LSB remote software and the communication between BT300 and UI300 is temporarily not available.

TERMINATION

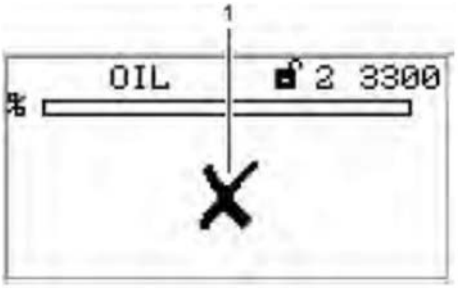

Termination

1 Communication error pictogram – no connection available

4 LIST OF FAULT CODES

To see the "historical lock-out" see paragraph 3.1.4

Fault Code	D1	D2	Description
0	Unknown fault (internal error)		
1	Pre-ventilation signal is still active.		
2	Parasitic light detected		
3	Flame blow-off during ignition		
4	Flame blow-off during operation		
5	Flame signal does not appear during the first safety time		
6	Flame signal extinguishes during stabilization time		
7	Flame signal extinguishes during first safety time		
8	Flame signal extinguishes during the second safety time		
9	Flame signal does not appear during the safety time		
10	Flame signal extinguishes during the safety time		
11	Monitoring for parasitic light does not last the required 5 seconds		
13	Main flame appears during ignition		
103	Miscellaneous data invalid		
105	Curve data are invalid or not available.	Curve set / Fuel number	
106	Parameters between both controllers are inconsistent Possible cause	Parameter No.	
107	Configuration is not valid see chapter 3 Assignment of		
120	Different operation modes on both controllers		
121	Correction is out of range	Channel (x)	
141	Channel feedback changes too fast	Channel (x)	
151	Recirculation damper is deactivated	Channel (x)	
170	Short circuit of LDR flame detector		
191	First monitoring band exceeded for to long	Channel (x)	
201	First monitoring band fall short for to long	Channel (x)	
211	Second monitoringband exceeded for to long	Channel (x)	
221	Second monitoring band fall short for to long	Channel (x)	
231	Fuel/air ratio control is blocked	Channel (x)	
241	Actuator doesn´t move, i.e. no position feedback	Channel	0 = backward, 1 = forward
251	Actuator cannot find reference position	Channel	
261	Actuator returns invalid position (difference to target position too	Channel	
271	Actuator position changes too fast, e.g. slip	Channel	
281	Actuator feedback not correct	Channel	
320	Open broken wire at firing rate input		
321	Open broken wire at feedback channel	Channel (x)	
351	Invalid fuel change while burner is running		
352	Invalid combination of fuel signals (no signals)		
353	Invalid combination of fuel signals (several signals)		
362	Fault shut-down due to a missing bruner maintenance		
363	Smallest valid O2 value deceeded		
371	Outpout for internal firing-rate is defective		
372	Difference of the burner firing-rate values between main processor		
381	Deviation between main processor an watchdog controller too	Correction channel	
391	Curve set has changed during programming		
393	Emergency shut-down activated		
394	Burner ON/OFF signal from the user interface turned off		
451	Being operating mode for ignition not all channels are in ignition	Channel	
600	Program monitoring time (FAT) exceeded		
601	Failure during leakage test: gas pressure still active		
602	Failure during leakage test: no gas pressure detected		
603	Manual venting of the gas line required!		

607	Invalid drop of ignition position acknowledgement		
608	Invalid drop of the boiler safety interlock chain		
609	Invalid drop of the gas safety interlock chain		
610	Invalid drop of the oil safety interlocj chain		
611	Gas pressure too low		
613	Air pressure signal is missing		
617	Permanent pilot flame extinguishes during operation		
624	Oil pressure too low		
711	Invalid change of the operation mode	Internal state information	
713	Invalid signal combination at input terminals during operating		
714	Invalid signal combination at input terminals during operating		
715	Invalid signal combination at input terminals during operating		
716	Invalid signal combination at input terminals during operating		
717	Invalid signal combination at input terminals during operating		
719	Fuel valves are open for too long without a flame		
720	Ignition transformer activated too long		
721	Ignition valve openes for too long		
722	Fuel valves open in maintenance mode		
723	Ignition process needs too much time		
724	Oil pressure too low		
725	Oil valves are open while gas is selected		
727	Main gas 1 opens unexpectedly		
728	All three gas valves open for too long		
729	Ignition process lasts for too long (without pilot burner)		
730	Maintenance mode without pilot burner		
731	Ignition valve opens without pilot burner		
732	Invalid signal combination at input terminals during operation		
734	Pre-ventilation period falls below the minimum		
739	Leakage test: Main gas valve 2 opens for too long		
740	Leakage test: Main gas valve 1 leaky		
741	Leakage test: Main gas valve 1 opens for too long		
742	Leakage test: Main gas valve 2 leaky		
743	Flame monitoring: Flame burns for too long after shutdown		
745	Program monitoring time exceeded		
746	Solenoid valve cannot be switched off		
747	Leakage test: Venting into the burner is not allowed		
751	The bus-card runs into time-out.		
759	Leaving "Setting-mode" automatically after 24 hours		
760	Fuel change during setting-mode is not allowed		
763	Different curve selection on main processor and watchdog		
764	CO-controller - internal curve set failure		
800	Parameter defective	Parameter No	
801	Channel control mode is inconsistent between main processor and	Channel	
802	Integration of a channel into the fuel/air ratio control takes too	Channel	
803	Channel is locked for too long (fatal error, no automatic restart	Channel	
804	Channel mode of the fuel/air ratio control does not match the type	Channel	
805	Directly controlled channel runs to an invalid position, i.e. a	Channel + Date	
888	Fault interlocking active!	Reference no.	
889	The gap between two remote fault releases is too short		
921	Output terminal for oil valve defective		
922	Output terminal for ignition transformer defective		
923	Output terminal for gas valve 1 defective		
924	Output terminal for gas valve 2 defective		
925	Output terminal for ignition transformer defective		
928	Output terminal for oil pump defective		
929	Output terminals for fan defective		

986	Dynamic range test recognizes an invalid feedback	Channel	
987	Change-over during staged operation takes too much time		
985	VSM diagnosis error possible cause of error: BurnerTronic		
988	Fuel selection relay in the DFM is defective or inconsistent		
989	Plausibility test of actuator feedback in programmed curve failed		
990	Power failure		
996	Secure parameter writing could not be finished. Device is blocked.		
999	Internal Error! See chapter 4 Assignment of internal fault 999		

5 ASSIGNMENT OF CONFIGURATION FAULT 107

D1	Description
1	Too many channels in configuration parameter 804.
2	No channel at all configured.
3	Permanent ignition burner configured (parameter 302, 303), but no ignition flame monitoring device present (parameter 800).
6	Prepurge suppression via external signal not implemented.
7	Fuel change via Off and an unlimited post ventilation configured.
8	Prepurge time is smaller than minimal prepurge time.
9	For stages oil mode.
13	Australian flame monitoring configured, but no ignition flame monitoring device.
18	Standby operation at BT300 not allowed.
19	Invalid fuel change selected.
20	BT300 only with separate ignition point.
21	"Ignition With Fan", only useful with pure oil devices.
22	Staged operation only useful with pure oil devices.
23	3-staged operation only works without ignition burner.
24	Permanent operation not allowed (Featureflag).
25	Fuel change not allowed (Featureflag).
26	Too many channels (Featureflag).
27	Staged oil burners need an air channel.
28	There is an invalid function configured for a channel (Parameter 400-404).
30	Multiple terminals defined for one signal, Terminal configuration invalid.
31	No output terminal for fan or transformer available.
32	Necessary outputs for operation with oil not available (Oil pump or oil valve).
33	Necessary outputs for operation with gas not available (gas valve).
34	An output terminal is needed for the ignition valve, but is not available in the actual terminal configuration.
40	No input terminal for the air pressure monitor available.
41	No input terminal for the oil safety chain available (oil pressure min will not be monitored directly, because it can be included in the safety chain).
42	No input terminal for the gas safety chain or minimum gas pressure available.
43	The feedback line for the fuel selection is not mapped, but is required.
31	No output terminal for fan or transformer available.
32	Necessary outputs for operation with oil not available (Oil pump or oil valve).
33	Necessary outputs for operation with gas not available (gas valve).
34	An output terminal is needed for the ignition valve, but is not available in the actual terminal configuration.
40	No input terminal for the air pressure monitor available.
41	No input terminal for the oil safety chain available (oil pressure min will not be monitored directly, because it can be included in the safety chain).
42	No input terminal for the gas safety chain or minimum gas pressure available.
43	The feedback line for the fuel selection is not mapped, but is required.

6 ASSIGNMENT OF INTERNAL FAULT 999

0-1999 internal faults generated from within System API		
D1	D2	Description
10	return value of m_PwrOn_uiInitAPI()	m_PwrOn_uiInitAPI() failed
20	0	CRC32 check of ROM failed
21	0	Cyclic CRC32 check of ROM during runtime failed
22	Erroneous State	State machine for CRC32 check during runtime ran into an invalid state
40	0	m_PwrOn_bLoadEEPROM() failed
92	Directive	ATTENTION, wrong number in the wrong module, signaled by hchactab if control tables are not correct
200	0	Last destination element is no member of sER.sP
201	0	Last destination element is no member of sER.sM
202	0	Last destination element is no member of sER.sC
203	0	Last destination element is no member of sER.sH
204	0	Destination is no member of sER.sX
210	sEECtrl.sChk.uiReadStartAddr	Refresh cycle timeout expired
211	sEECtrl.sChk.uiReadStartAddr	Uncorrectable error in EEPROM block
212	sEECtrl.eSeq_State	Invalid state
215	uiEEFaultAddr	Uncorrectable error in Parameter Set
216	uiEEFaultAddr	Uncorrectable error in Miscell-Data
217	uiEEFaultAddr	Uncorrectable error in Curve Set
220	0	pucDst == NULL
222	uiEEStartAddr	Invalid EEPROM address
240	uiEEStartAddr	Write beyond end of safety area!
241	uiEEStartAddr	Start address in safety area is no multiple of 3
242	uiEEStartAddr	Write beyond end of non-safety area!
243	uiEEStartAddr	Start address is in reserved area!
244	ulReqFIFOSpace	Not enough FIFO space
250	(ulong32)pucDst	Readback error while refreshing - possibly defective RAM cell
300	0	Timout sICom.uiRxLiveTimer expired
301	0	Timout sICom.uiRxLiveTimer expired
350	0	Timeout sICom.uixLiveTimer expired
360	0	Timeout while waiting for the exit from DUAL_BEF_CHECK_PARAM
361	0	FIFO ful !
380	uiBPP_HPPunktNr	Error while calling uiPutPunkt()
381	0	Seal control command in the presence of BM_FAT_KALTCHECK
382	0	Timeout in the cyclical parameter comparison
383	uiBCP_AnzParam[0]	DUAL_BEF_CHANGE_PARAM1: Invalid value in the reception buffer
384	uiBCP_AnzParam[1]	DUAL_BEF_CHANGE_PARAM2: Invalid value in the reception buffer
385	sRx.Buffer.ui[ucRxOK-1][uiSTART-BEF+47]	Cyclic parameter verification: different parameters between HP and UP!
386	uiParaIdx	PowerOn parameter verification: different parameters between HP and UP!
410	sIO.sIn.ulInputsN	Detected positive half-wave on terminal input!
411	input status received from UP	Different input status between controllers
412	0	The readback input of the fuel selection relais contacts in the dual fuel is invalid. DFM probably defect.
420	uil	Input status of digital input on HP and UP is inconsistent (>20ms)
430	ucPin2Test	Pin short circuit test detected an error!Currently tested pin not configurated as output or is stuck at 1

431	ucPin2Test	Pin short circuit test detected an error!Short-circuit between pins, pull-up of input stage defective or pin is externally stuck at 0
440	0	sIO.sIn.uiTestSignalTimeout expired
450	0	Main power relay (K2) does not switch correctly to off when out of power.
451	ucRelay	Relay does not switch correctly, when relay power is enabled (for details see enum teRelais)
460	uiFaultParam	Failure of relais power switching or readback of relay coils of K1 or K2Param2: Bit 0 is set if readback line of K1 is erroneous, Bit 1 is set if readback line of K2 is erroneous
461	uiFaultParam	Readback status of relay K1 or K2 differs from desired switching status, relay propably defect.Param2:Bit 0: nominal state of K1Bit 1: nominal state of K2Bit 8: state of readback line of K1Bit 9: state of readback line of K2
500	0	Timeout while waiting for end of write cycle
501	0	SLA+W has been transmitted; NO ACK has been received
502	0	SLA+R has been transmitted; NO ACK has been received
503	0	Data byte has been transmitted; NO ACK has been received
504	0	BUS error due to an illegal START or STOP condition
505	0	Arbitration lost in SLA+R/W or Data bytes
510	ulI2CStat	Unknown/invalid state!
600	sSRCtrl.uiOffset	Correction of defective triple in Safety RAM structure failed
610	(ulong32)pucDst	Invalid destination address
620	(ulong32)puiDst	Invalid destination address
630	(ulong32)pulDst	Invalid destination address
700	0	CPU selftest failed
701	sSelftest.sMngr.eState	state-event-machine failed with AC_ERR
710	sSelftest.sWD.eErrorState	Watchdog selftest failed
711	sSelftest.sWD.eState	Invalid default case
720	Selftest.sVM.ucTest2Perform	Invalid default case
721	Selftest.sVM.eErrorState	Supply voltage monitor selftest failed
722	Selftest.sVM.eState	Invalid default case
730	sSelftest.sRR.eErrorState	Relay release circuit selftest failed
731	sSelftest.sRR.eState	Invalid default case
740	sSelftest.sRPW.eErrorState	Relay PWR release circuit selftest failed
741	sSelftest.sRPW.eState	Invalid default case
750	0: USR-Stack, 1: IRQ-Stack	Stack overflow detected
751	0	Stackaddress is NULL-Pointer
752	0	Stackaddress is NULL-Pointer
800	sWDog.ulReleasePtrn1	Trigger release patterns are invalid!
810	eFeedIndex	Invalid Feed Index
820	eTriggerCtrl	Invalid Trigger Mode
830	0	No valid watchdog trigger received (frequency or duty cycle invalid)
900	uiErrorCode	Fault from LPC_API error handler
920	0	Invalid entry in iStoerResRam
930	uiMaskedFaultCode	uiMaskedFaultCode out of range!
1200	0	Flame signal doesn't disappear during self-test
1210	sIFD.eTestState	Invalid default case
1220	sIFD.uiClock	UP is missing test impulses
1221	sIFD.uiClock	Test signal duration too short
1222	sIFD.uiClock	Test signal duration too short
1240	0	Detected short circuit of LDR
1250	uiADValue	Circuit selftest failed, A/D value out of expected range
1260	sLDR.eTestState	Invalid default case
1270	sLDR.uiClock	Test interval too long
1271	sLDR.uiClock	HP released test pin too late
1272	sLDR.uiClock	HP released test pin too early

1290	uiMyFlames XOR uiPartnerFlames	Flame signals on both controllers are inconsistent (bit 0: main flame, bit 1: ignition flame)
1300	0	Pointer to transmit buffer is NULL
1400	psActuator->ucSANumber	H_SA_INTERFACE_INVALID_ACTUATOR_TYPE
1401	psActuator->ucSANumber	H_SA_INTERFACE_INVALID_DIRECTION
1405	0	H_SA_INTERFACE_WRONG_RAMP_CALCULATION
1406	0	ulGradientMax <= ulGradientDesired
1410	0	H_SA_INTERFACE_WRONG_RAMP_CALCULATION
1411	0	H_SA_INTERFACE_ERROR_TIMING
1415	psActuator->ucSANumber	psActuator->ucSANumber Invalid!
1416	psActuator->ucSANumber	psActuator->ucSANumber Invalid!
1420	psActuator->ucSANumber	H_SA_INTERFACE_WRONG_RAMP_CALCULATION
1430	psActuator->ucSANumber	H_SA_FEEDBACK_WRONG_FEEDBACK
1435	psActuator->ucSANumber	H_SA_PLAUSIB_ACTUATOR_OUT_OF_RANGE
1436	psActuator->ucSANumber	H_SA_PLAUSIB_SECTION_COUNT_OUT_OF_RANGE
1440	psActuator->ucSANumber	H_SA_REFERENCE_SEARCH_NO_REFERENCE_FOUND
1450	psActuator->ucSANumber	H_SA_STEPCALC_CALL_COUNT_OVERFLOW
1451	psActuator->ucSANumber	H_SA_STEPCALC_SECTIONCOUNT_OUT_OF_RANGE
1452	psActuator->ucSANumber	H_SA_STEPCALC_INVALID_DIRECTION
1453	psActuator->ucSANumber	H_SA_STEPCALC_SECTIONCOUNT_OUT_OF_RANGE
1454	psActuator->ucSANumber	H_SA_STEPCALC_INVALID_DIRECTION
1455	psActuator->ucSANumber	H_SA_STEPCALC_WRONG_STATUS
1460	0	U_SA_INTERFACE_INVALID_ACTUATOR_TYPE
1461	0	U_SA_INTERFACE_INVALID_DIRECTION
1470	psActuator->ucSANumber	U_SA_FEEDBACK_INVALID_DIRECTION
1471	psActuator->ucSANumber	U_SA_FEEDBACK_INVALID_DIRECTION
1472	psActuator->ucSANumber	U_SA_FEEDBACK_WRONG_FEEDBACK
1480	psActuator->ucSANumber	U_SA_REFERENCE_SEARCH_INVALID_ACTUATOR_TYPE
1490	psActuator->ucSANumber	psActuator->ucSANumber Invalid!
1500	0	Timeout while sending ICOM command
1501	0	Timeout while waiting for ACK of ICOM command
1502	0	Timeout while waiting for end of actuator initilization
1503	0	Timeout while waiting for end of actuator initilization
1504	0	Timeout while waiting for end of actuator initilization
1505	Actuator Number	HP: Invalid configuration. Parameter for Actuator Type should never be different from 1 or 2
1505	Actuator Number	ÜP: Invalid configuration. Parameter for Actuator Type should never be different from 1 or 2
1490	psActuator->ucSANumber	psActuator->ucSANumber Invalid!
1500	0	Timeout while sending ICOM command
1501	0	Timeout while waiting for ACK of ICOM command
1502	0	Timeout while waiting for end of actuator initilization
1503	0	Timeout while waiting for end of actuator initilization

2000-3999 internal faults generated from within Application (FAT and System)		
D1	D2	Description
2000		unknwoen event, for the event handling mechanism
2001		too many events for even queue
2100		Invalid buffer input
2101		EEProm probably defective
2200		Invalid Index for SQBLData00
2201		Invalid Index for SQBLData01
2202		Invalid Index for SQBLData02
2203		Invalid Index for SQBLData03
2204		Invalid Index for SQBLData04
2205		Invalid Index for SQBLData05
2206		Invalid Index for SQBLDataKurven
2207		Invalid Index for SQBLDataPara
2208		Invalid Index for SQBLData15

2209		Data request for data block, but no transmission.
2300		Invalid state
2301		Invalid state
2302		Deleting curve, end of EI
2303		Invalid state
2304		Invalid state
2305		Invalid parameter number (does not exist)
2306		Invalid state (cold check)
2307		Cold check
2308		Cold check
2309		Cold check
2310		Invalid state
2350 -		Cold check
2354		Attempt to write to a modbus register
2400		Modbus register described
2401		Parameter with access level > 4
2500		Does not find the operating mode
2600		Transfer forbidden
2601		Deleting curve, left EI
2700		The air pressure was not droped but the burner still starts
2800		It was opened more than one valve in the cold check
2801		Maintenance mode on the main controller is active, but there is no mainte-
2802		nance mode parameterized
2803		Maintenance mode active but it is still ignite
2804		Burner starts, while the supervisor controller is blocked
2805		Burner starts, while no reference test was made
2806		The stage sent by HP for the staged-operation does not seem plausible
2900		Program load by the timer to high
3000		All errors, for which no error number was registered
3100		Error message of a password module
3101		Error message of the password module
3200		Internal overflow, intermediate result does not fit in the variable
3201		Overflow of the end result
3230		UP Version differs from HP version
3250		Invalid parameter for staged burner-firing-rate controller
3300		Sequence control BrennUm default case entered
3301		Sequence control leakage test default case entered
3302		Sequence control FAT default case
3303		Sequence control post ventilation default case
3304		Sequence control pre ventilation default case entered
3305		Sequence control Ingnition default case entered
2900		Program load by the timer to high
3000		All errors, for which no error number was registered
3100		Error message of a password module
3101		Error message of the password module
3200		Internal overflow, intermediate result does not fit in the variable
3201		Overflow of the end result
3230		UP Version differs from HP version
3250		Invalid parameter for staged burner-firing-rate controller
3300		Sequence control BrennUm default case entered
3301		Sequence control leakage test default case entered
3302		Sequence control FAT default case
3303		Sequence control post ventilation default case

3304		Sequence control pre ventilation default case entered
3305		Sequence control Ingnition default case entered

4000-4999 Internal faults generated from within Application (Fuel/Air Ratio Control)		
D1	D2	Description
4000	0	No curve point to the load of the ignition point
4001	0	ucPIdx_R >= ucPunktAnzahl
4100	sRampe.ucState	invalid value of sRampe.ucState
4200	ucVBMode	invalid value of ucVBMode
4302	0	No active air channel is defined (parameterization error)
4400	ucSteuerArtEx	invalid value of ucSteuerArtEx
4401	0	timeout while waiting for ???
4402	ucSteuerArtEx	invalid value of ucSteuerArtEx
4403	ucKanStat	(ucKanStat & Def_VKM2_MSK) != Def_VKM2_DVAL
4404	0	timeout while waiting for ???
4405	ucKanStat	disabled channel is moving!
4406	ucRzStState[ucKnr]	invalid value of ucRzStState[ucKnr]
4407	ucVBStat	invalid value of ucVBStatn
4500	0	sRampe.uiLaufzeit == 0!
4501	ucKnr	IfKM_VB() returned 0
4600	ucVorgabe	invalid value of ucVorgabe
4601	(sRampe.uc2VBKMsk sRampe.ucVBKMsk)	No VB channels can be active in VSM_NOVB
4602	sRampT.ucNState	Unknown default state
4603	sRampe.ucState	invalid value of sRampe.ucState
4700	0	Ramp time expired!
4701		Transferred channel number out of the permitted range
4702		Transferred channel number out of the permitted range
4703		Transferred channel number out of the permitted range
4704		Transferred channel number out of the permitted range
4705	ucKnr	Transferred channel number out of the permitted range
4706	ucKnr	Transferred channel number out of the permitted range
4707	ucKnr	Transferred channel number out of the permitted range
4708	ucKnr	Transferred channel number out of the permitted range
4709	ucKnr	Transferred channel number out of the permitted range
4710	ucKnr	Transferred channel number out of the permitted range
4711	ucKnr	Transferred channel number out of the permitted range
4712	ucKnr	Transferred channel number out of the permitted range
4713	ucKnr	Transferred channel number out of the permitted range
4714	ucKnr	Transferred channel number out of the permitted range
4715	ucKnr	Transferred channel number out of the permitted range
4716	ucKnr	Transferred channel number out of the permitted range
4717	ucKnr	Transferred channel number out of the permitted range
4800	uiActTmr	ucErg > 0!
4801	ucSgIdx	Parameter modification Knf_uiActuatorDirX while fuel/air ratio control is active or outside the operation modes “Burner Off” or “Fault”
4802	0	Allowed scope for the channel too small to assess the maximum speed
4900	ucKnr	Division by 0

5000-5999 Internal faults generated from within Application (firing-rate control)		
D1	D2	Description
5000	enInterneLastSeq	invalid value of enInterneLastSeq
5001	0	Ambiguous DPS+ / DPS- for load stage selection
5002	0	Curve error: curve for n-staged oil or channel speed for actuators was not determined
5003	0	Invalid parameter in function call

5004	0	Timers for the control of the stage switching time do not fit together: Switch-ing time of internal load < supervised time for set load
5005	0	Invalid stage curve with internal load set by the stage controller
5007	0	Invalid load value while adjusting the staged oil curve
5008	0	Invalid stage- activation control mode

6000-6999 Internal faults generated from within UP Application-Control (Fuel/Air Ratio Control)		
D1	D2	Description
6000	ucSteuerArtEx	unknown Mode of Channel-Control
6001	ucBetrMoNr	Overadressing of Array was detected
6100	ucKnr	unknown Mode of Channel-Control
6200	0	Avoid an endless loop
6201	0	Avoid an endless loop
6202	0	Avoid an endless loop
6203	0	SSR.sS0.ucAkt SSR.sS0.uiKanalenb changed without AufrufKurve2Workram
6204	0	No completely valid point found but curve not empty
6205	Detected points No.	number of points don't match Ram-curve (fatal error with task)
6206	Operating curve points index	Writing firing-rate failed (Ram-error)
6207	Original curve points index	firing-rate point in original curve invalid
6208	Original curve points index	invalid point index
6209	0	Point-approximation not possible, no prior point
6210	0	Point-approximation not possible, no following point
6211	0	Point-approximation failed, invalid according point
6212	Operating curve points index	Writing setpoint failed (Ram-error)
6213	Original curve points index	invalid point-index
6214	0	Point-approximation not possible, no prior point
6215	0	Point-approximation not possible, no following point
6216	0	Point-approximation failed, invalid according point
6217	Operating curve points index	Return setpoint writing failed (Ram-error)
6218	Original curve points index	invalid point-index
6219	0	Point-approximation failed, invalid according point
6220	Operating curve points index	Evaluated-Correction-Setpoint-Writing failed (Ram-error)
6221	Original curve points index	invalid point-index
6222	0	Writing failed: Ram-error
6223	0	Writing failed: Ram-error
6224	Error No.	Too many differences between curves (sliding counter, substract 1 per cycle)
6225	Status No.	undefined state of statemachine
6300	ucSMState	Detect undefined State of Statemachine
6400	ucKnr	Division by 0

7 SETTING THE BURNER CURVE

Initial home page: keep thermostat open. Burner remain in stand-by	
Unlock the controller: press ENTER	
Info Manual Setting	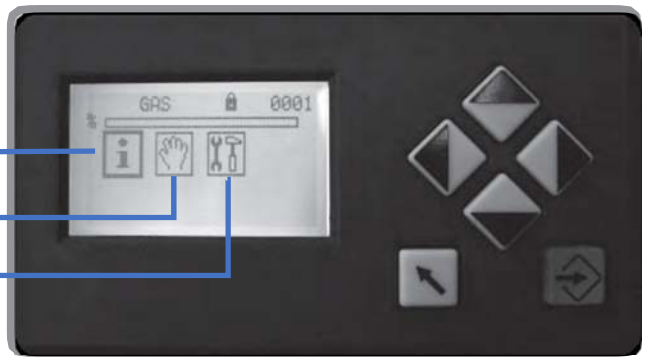
Press the right key to position on the Settings icon (indicated with wrench and hammer)	
Press ENTER	

Press ENTER again after selecting 'the key icon '.	
Keep the password “0000“ and confirm with ENTER.	
New page, level 1 unlocked	
Right click to EDIT.	
Press ENTER to enter the “curves page”.	

Air & gas position at burner's ignition 1 ignition position, 2 air servomotor position (digit) 3 gas servomotor position (digit) VALUES VARY FROM BURNER TO BURNER	
Close the thermostat the burner starts.	
Pre-purge.	
The controller moves the servomotors to the ignition position and excites the ignition transformer.	
If the burner starts with those settings, this page will appear: If the burner does not start with those settings the chapter "SETTING THE IGNITION POINT WITH BURNER IN STAND-BY"	

8 SETTING THE IGNITION POINT WITH BURNER IN STAND-BY

In case of troubles, the burner will go on lock-out mode and the reason will be indicated on the display.	
Check the lock code & press ENTER to unlock.	
Press ENTER to modify the positions (burner in stand-by).	
Click up to increase the gas opening position or down to decrease it.	
Right click to move from gas servomotor adjustment to air servomotor adjustment.	

Clickup to increase the air opening position or down to decrease it.	
Press ENTER to save the new settings. **CLOSE THE THERMOSTAT LINE**	

9 SETTING WITH BURNER ON

Check the combustion quality (with a flue gas analyzer). To modify the combustion valves and adjust servomotors position (gas and air), press ENTER.	
Click up to increase the gas opening position or down to decrease it.	
Right click to move from gas servomotor adjustment to air servomotor adjustment.	
Click up to increase the air opening position or down to decrease it.	
Press ENTER to save the new settings.	

Click up to quit the ignition position.	
Check the combustion quality in all positions (from minimum to maximum output) and adjust the gas and air setting if necessary (as indicated on chapter “SETTING THE IGNITION POINT WITH BURNER IN STAND-BY”).	
Set the maximum load position 999, according to the maximum output required by the boiler. If necessary, set the inlet gas pressure (at the exit of the gas pressure reducer). Check the output combustible and the quality of combustion in all positions and adjust gas and air if necessary (see chapter “SETTING THE IGNITION POINT WITH BURNER IN STAND-BY”).	
Press EXIT to quit the combustion settings.	
Press EXIT again to quit main menu.	

Press EXIT again to quit settings.	
The burner runs now in automatic mode.	
In case of troubles, the burner will go on lock-out mode and the reason will be indicated on the display. Exemple: H009 – lock-out code D1 - diagnostic 1 D2 - diagnostic 2 xxh - operation hours	
Check the lock code & press ENTER to unlock.	

If the ignition setting is not good enough (e.g. too much air), the burner cannot start. In that case adjust again the ignition point see chapter “SETTING THE BURNER CURVE”.
Otherwise make sure that no other reason may cause the ignition failure.

8 SETTING OF A NEW CURVE WITH VSD (OPTIONAL)

With VSD modify the curve points only with burner on.

With burner on STANDBY, press Enter	
With the arrows go on the icon press Enter	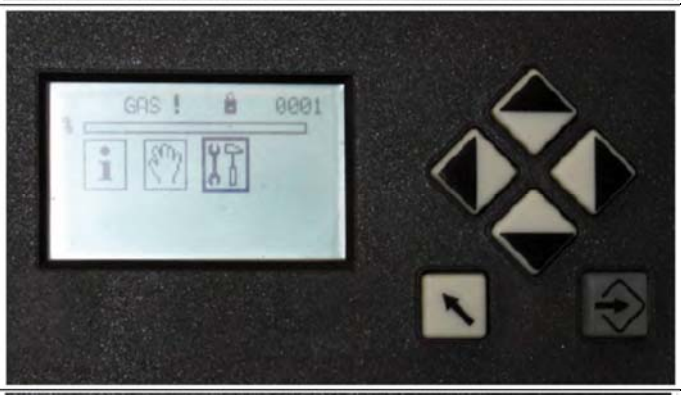
With the arrows go on the icon press Enter	
Check the password 0000 press Enter to confirm	

With the arrows go on the icon press Enter	
press Enter to cancel the curve	
press Enter to confirm curve cancellation	
Now the working curve has been cancelled press Enter	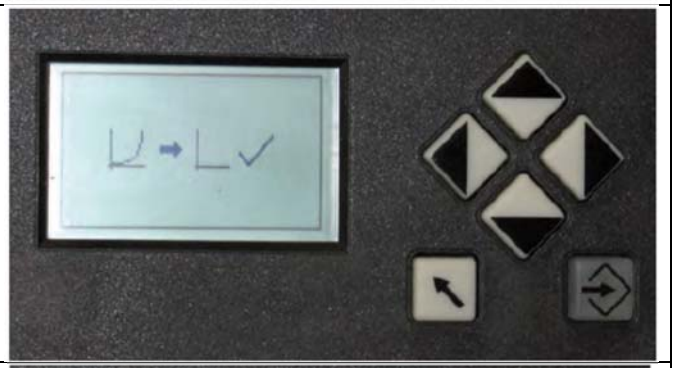
press Exit	

With the arrows go on the icon press Enter	
Close the “thermostat line”	
The burner carries out the pre-purge	
The burner reaches the ignition point	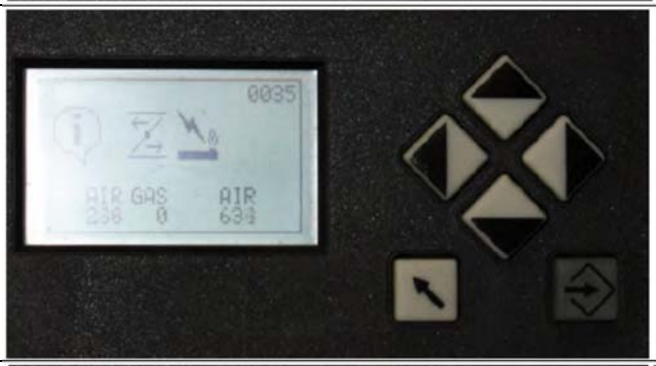
Wait for the air/gas servomotors to reach 0 degrees The VSD is set at 30 Hz press Enter	

press Enter and set the ignition point using the arrows	
Set the values and press Enter	
press Enter to confir the ignition point . the burner discharges and opens the valves.	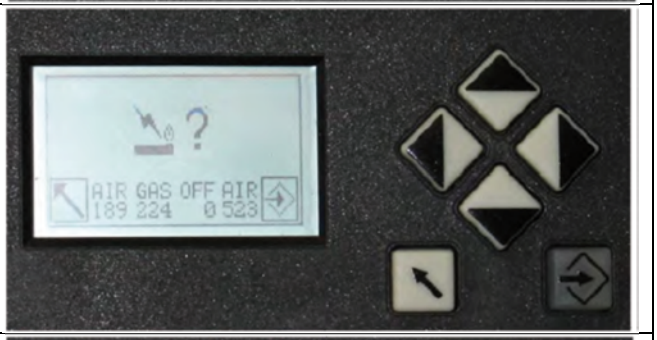
With burner on, check the combustion with a combustion analyser. Modify using the arrows and press Enter to store.	
Press to move onto the (minimum burner) load 200 Press Enter	

Press to set the minimum burner output press Enter to confirm	
Press to move onto the maximum load 999 press Enter	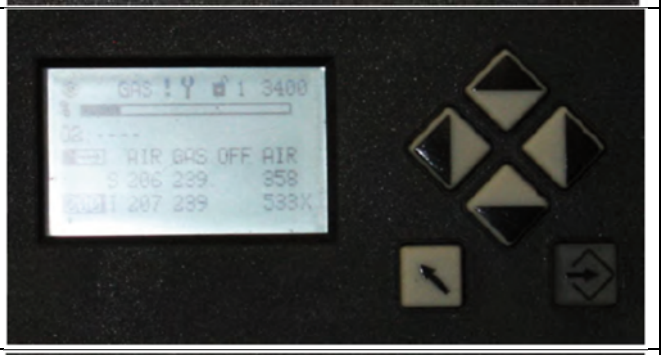
Press to set the maximum burner output Press Enter to confirm	
Check the combustion in all curve points (800-700-600-500-400-300-250) as in previous the points. Once the adjustment is done, press three times	

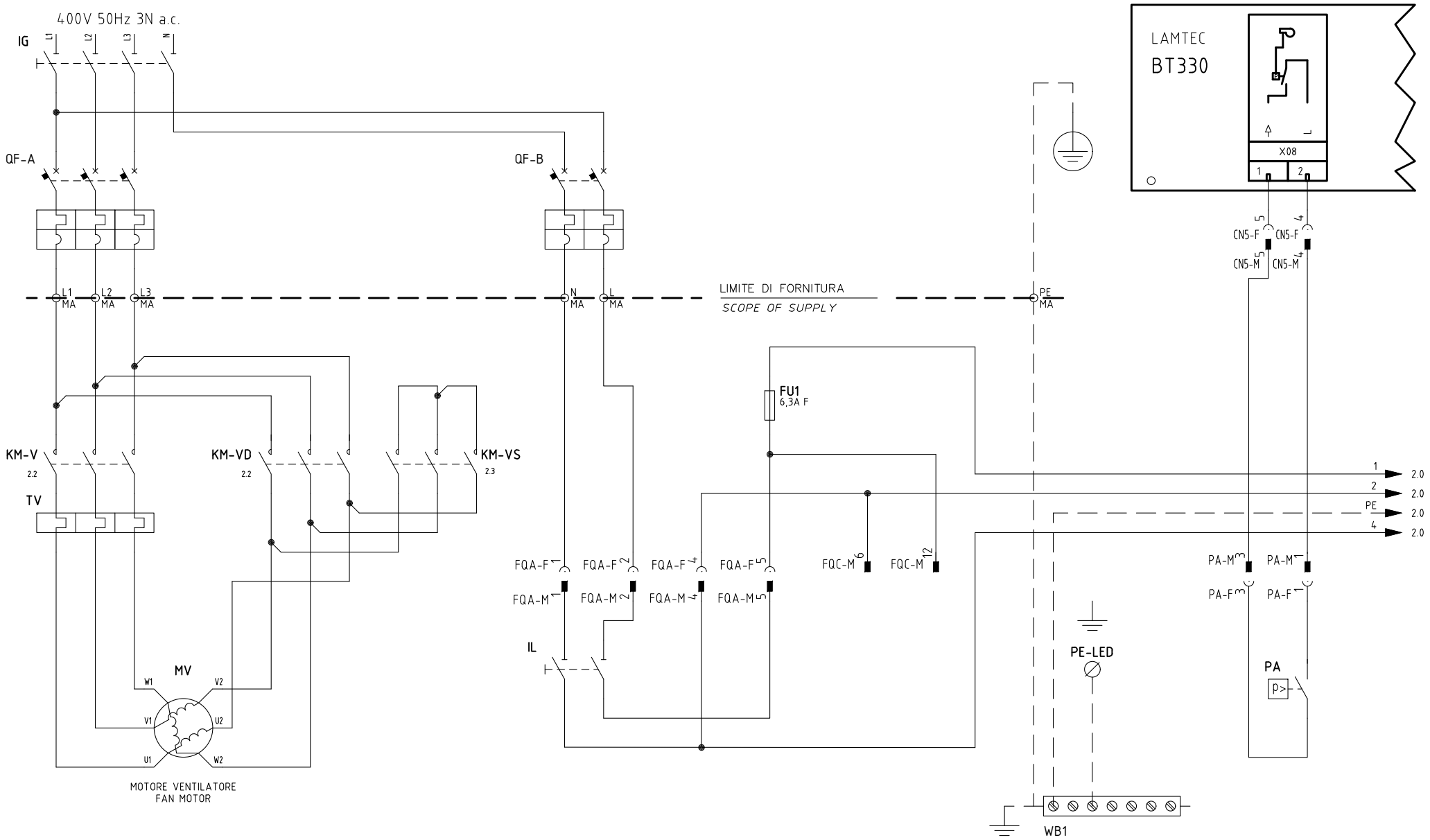

UNIGAS	Impianto: *TIPI/TYPES RX2050R-FGR / RX2050-FGR MODELLO/MODEL x-.PR(MD).xx.xx.A.1.xx.LF*	Ordine		Data 23/01/2019	PREC. /	FOGLIO 1
	Commessa		Data Controllato 23/01/2019	Revisione 00		
	Descrizione: *BT330 + (LCM100) + COD. 6100561*	Esecutore U. PINTON	Controllato M. MASCHIO	Dis. N. 12 - 0349	SEGUE 2	TOTALE 13

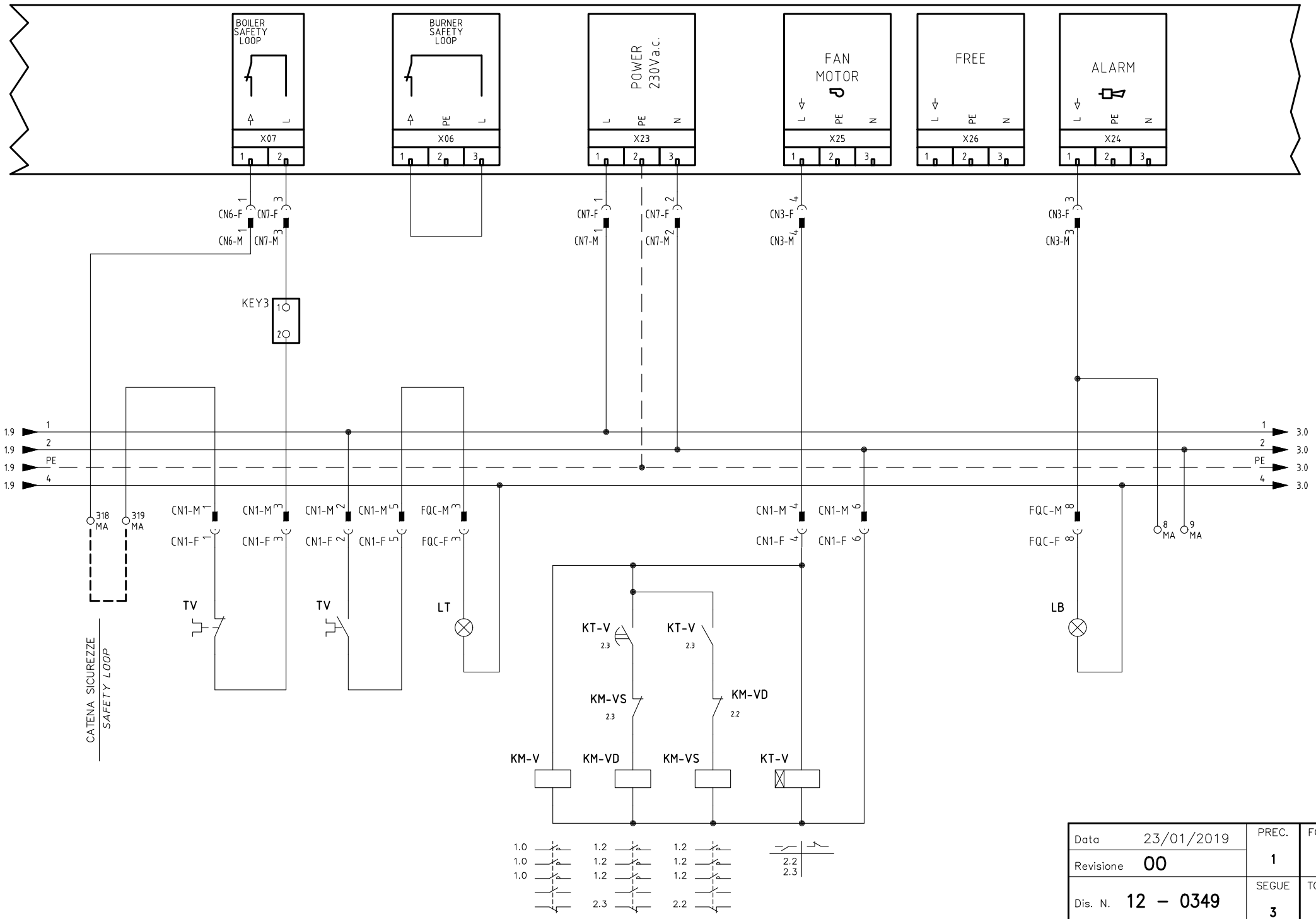

Data 23/01/2019	PREC. 1	FOGLIO 2
Revisione 00		
Dis. N. 12 – 0349	SEGUE 3	TOTALE 13

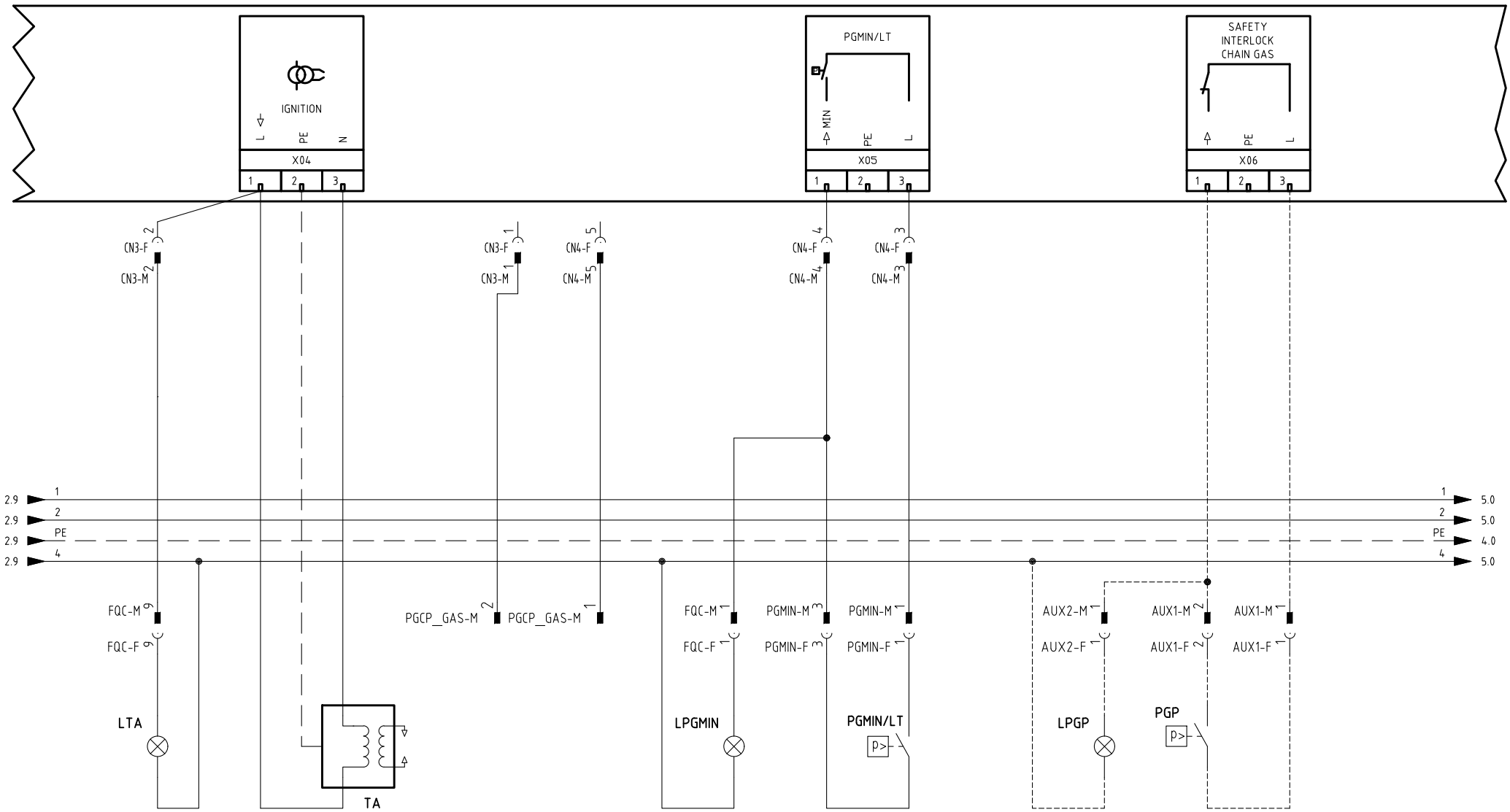

Data 23/01/2019		PREC.	FOGLIO
Revisione 00		2	3
Dis. N. 12 – 0349		SEGUE	TOTALE
		4	13

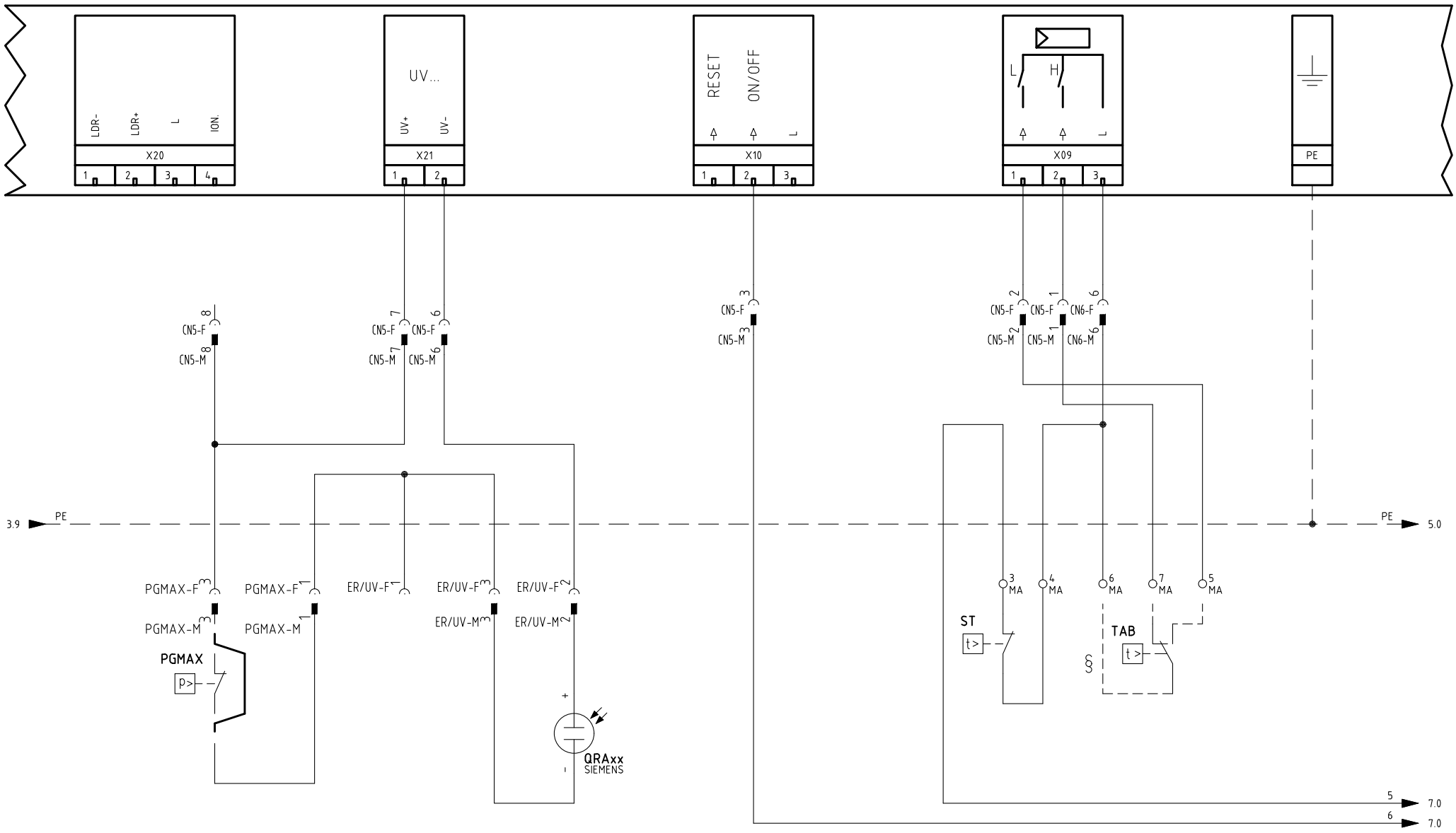

§

VERSIONE (PR) = USARE "TAB", TOGLIERE IL PONTE TRA I MORSETTI 6 - 7
E PARAMETRO BT3xx 0040 = 0 (REGOLATORE OFF)

(PR) VERSION = TO USE "TAB", REMOVE THE BRIDGE BETWEEN TERMINALS 6 -7
AND PARAMETER BT3xx 0040 = 0 (REGULATOR OFF)

VERSIONE (MD) = CON "LCM100" TOGLIERE IL PONTE TRA I MORSETTI 6 - 7
E PARAMETRO BT3xx 0040 = 1 (REGULATOR ON)

(MD) VERSION = REMOVE THE BRIDGE BETWEEN TERMINALS 6 -7
AND PARAMETER BT3xx 0040 = 1 (REGULATOR ON)

Data 23/01/2019	PREC. 3	FOGLIO 4
Revisione 00		
Dis. N. 12 – 0349	SEGUE 5	TOTALE 13

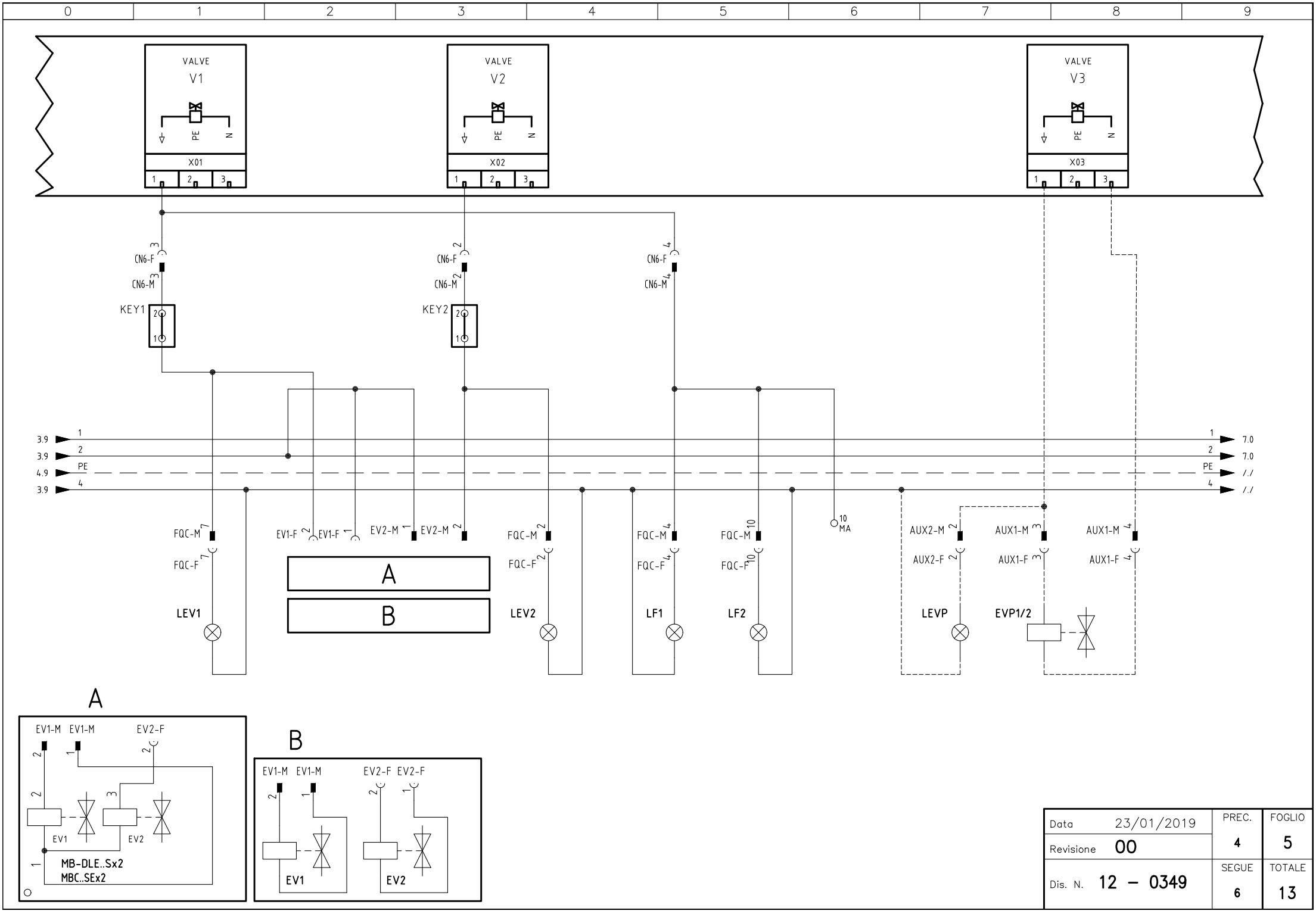

Data 23/01/2019		PREC. 4	FOGLIO 5
Revisione 00			
Dis. N. 12 – 0349		SEGUE 6	TOTALE 13

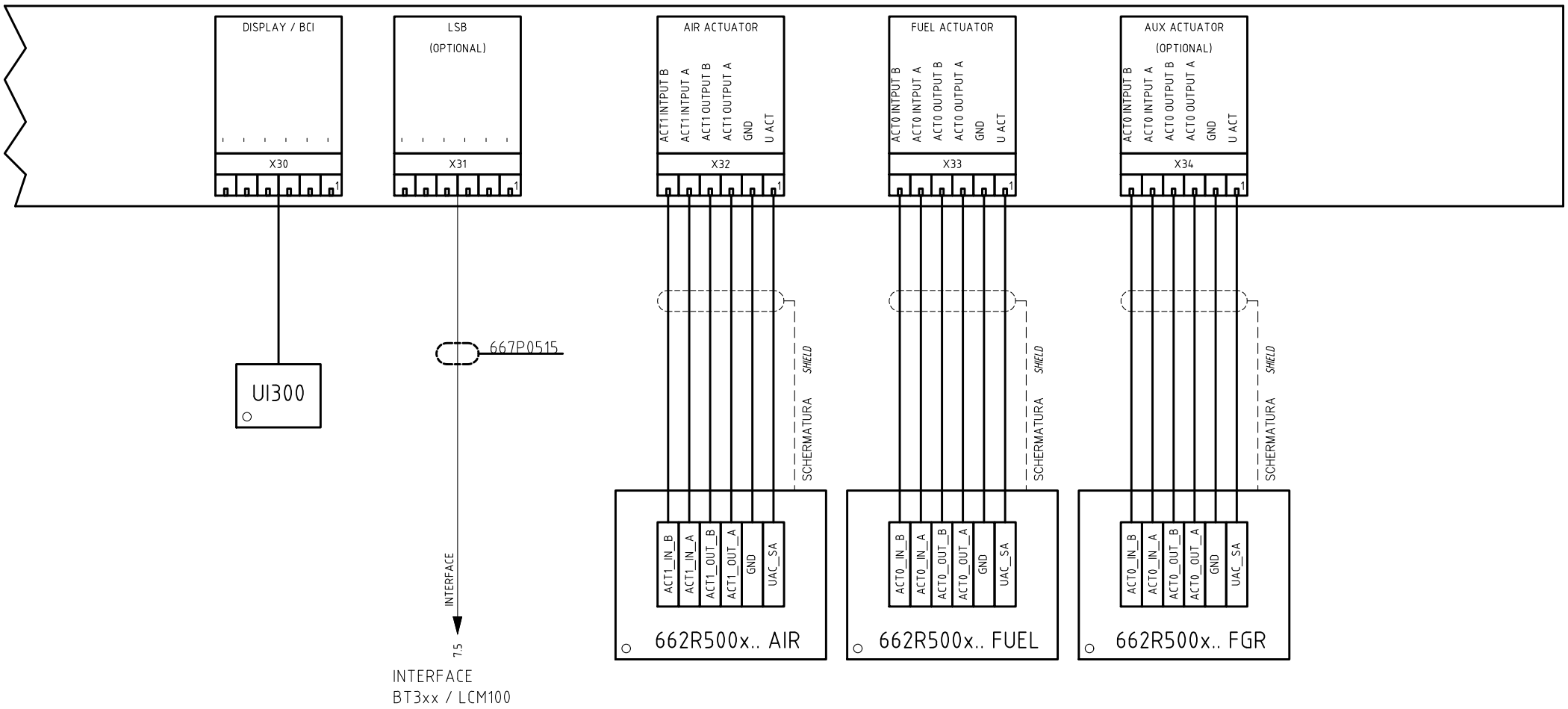

Data 23/01/2019		PREC. 5	FOGLIO 6
Revisione 00			
Dis. N. 12 – 0349		SEGUE 7	TOTALE 13

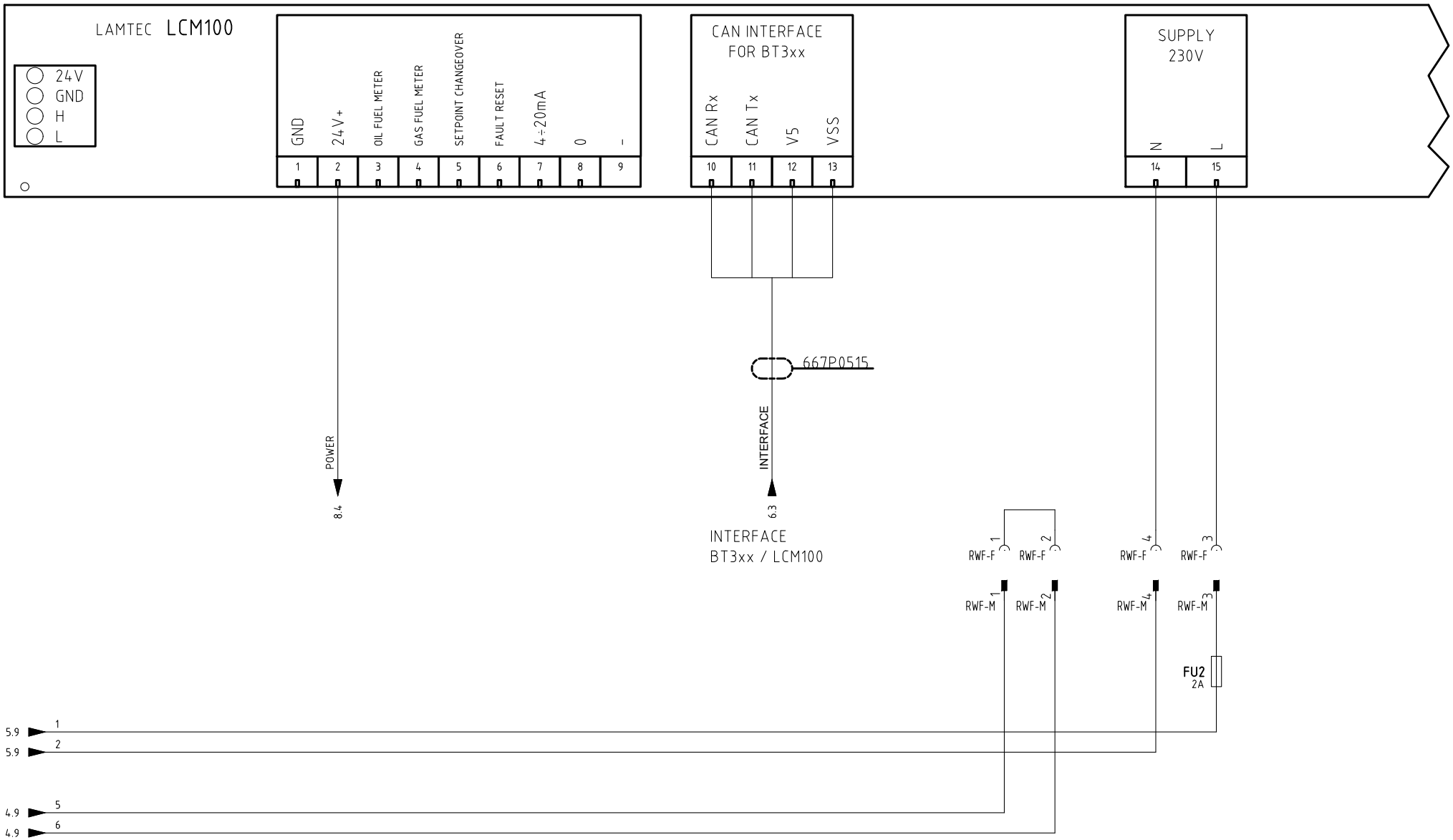

Data 23/01/2019		PREC. 6	FOGLIO 7
Revisione 00			
Dis. N. 12 – 0349		SEGUE 8	TOTALE 13

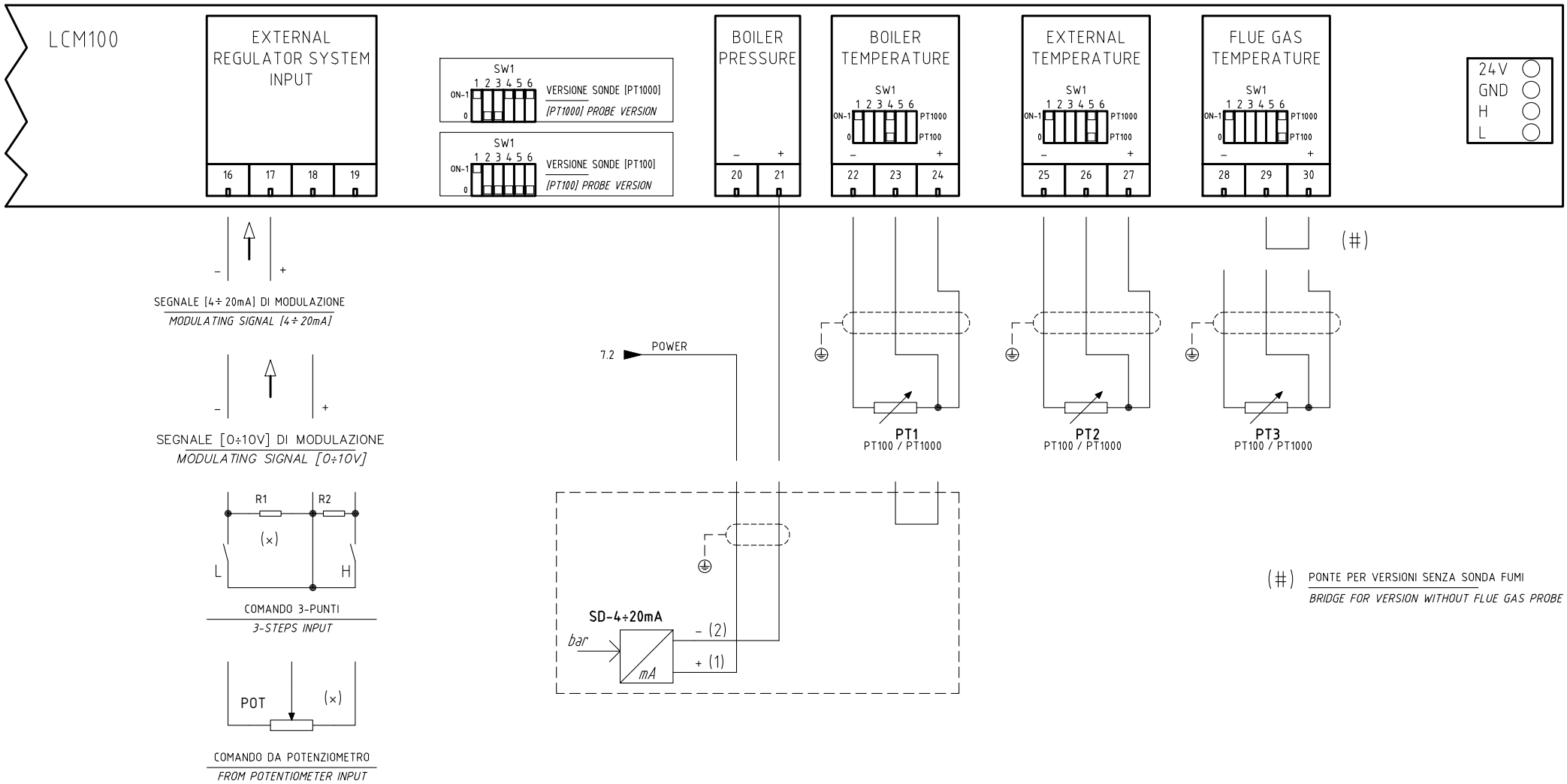

(×) R1 = R2 = POT = 2,2kOhm ÷ 22kOhm

Data 23/01/2019		PREC.	FOGLIO
Revisione 00		7	8
Dis. N. 12 – 0349		SEGUE	TOTALE
		9	13

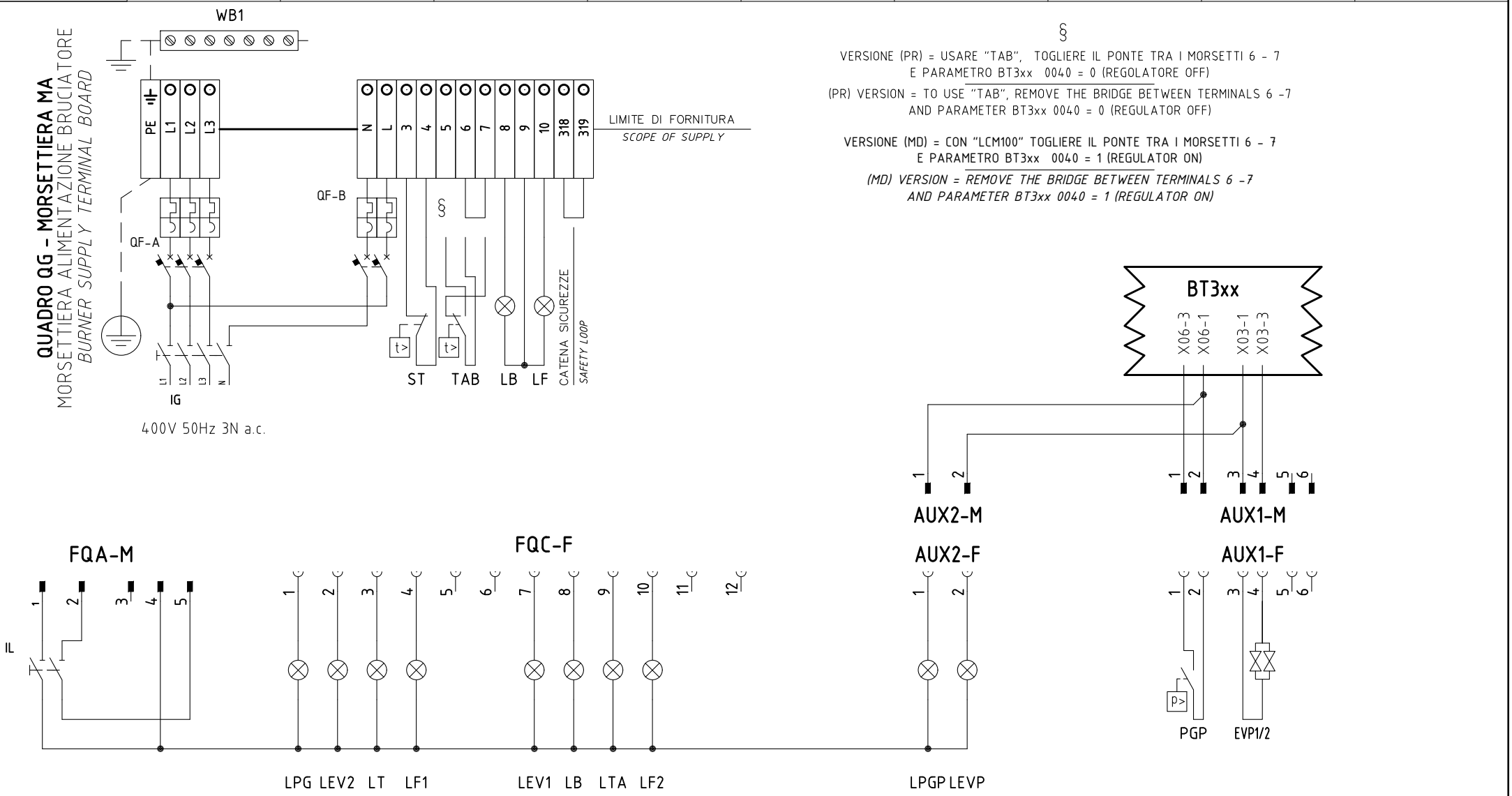

Data 23/01/2019		PREC.	FOGLIO
Revisione 00		8	9
Dis. N. 12 – 0349		SEGUE	TOTALE
		10	13

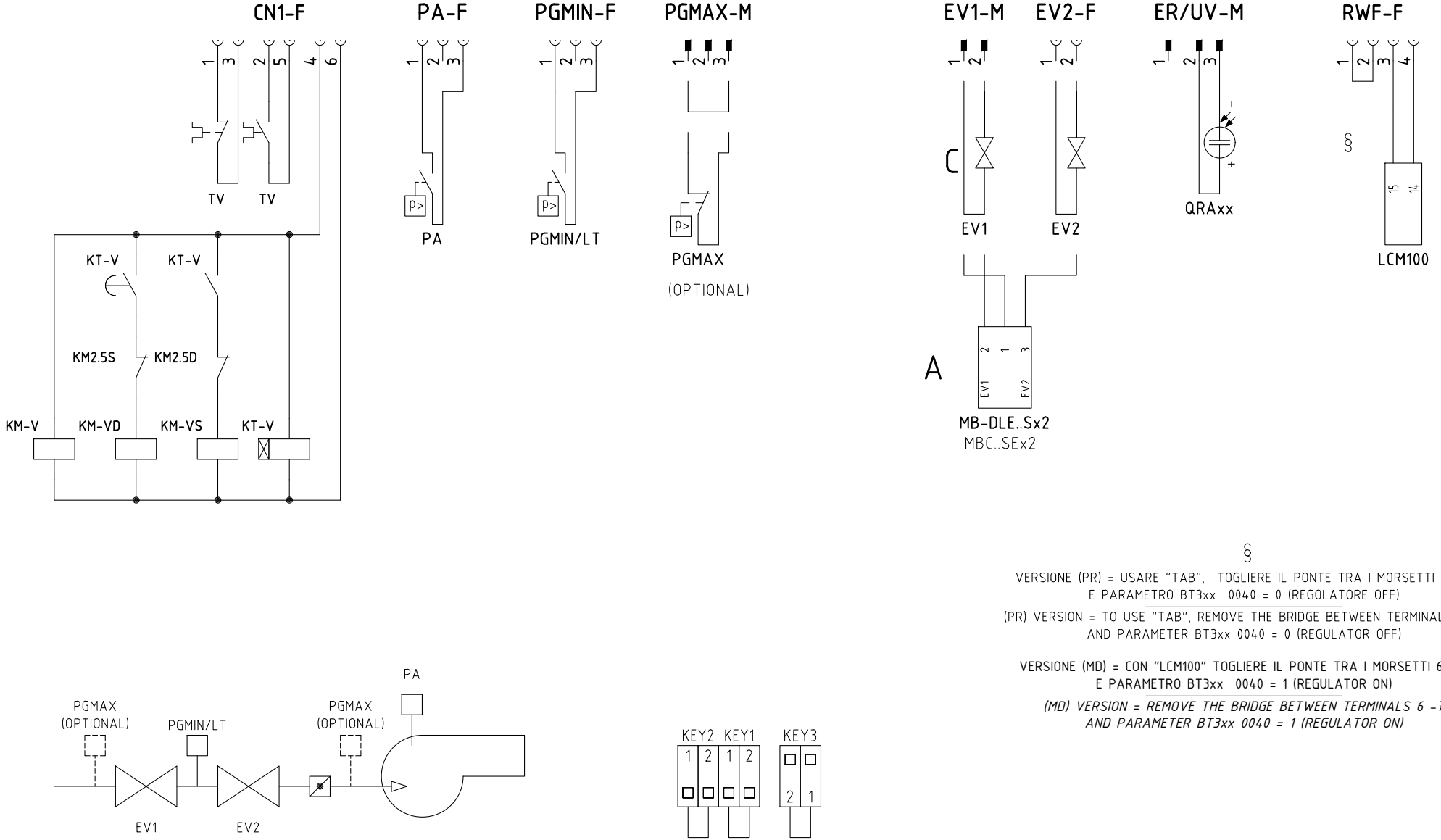

§

VERSIONE (PR) = USARE "TAB", TOGLIERE IL PONTE TRA I MORSETTI 6 - 7
E PARAMETRO BT3xx 0040 = 0 (REGOLATORE OFF)

(PR) VERSION = TO USE "TAB", REMOVE THE BRIDGE BETWEEN TERMINALS 6 -7
AND PARAMETER BT3xx 0040 = 0 (REGULATOR OFF)

VERSIONE (MD) = CON "LCM100" TOGLIERE IL PONTE TRA I MORSETTI 6 - 7
E PARAMETRO BT3xx 0040 = 1 (REGULATOR ON)

(MD) VERSION = REMOVE THE BRIDGE BETWEEN TERMINALS 6 -7
AND PARAMETER BT3xx 0040 = 1 (REGULATOR ON)

Data 23/01/2019		PREC. 9	FOGLIO 10
Revisione 00			
Dis. N. 12 – 0349		SEGUE 11	TOTALE 13

Sigla/Item	Foglio/Sheet	Funzione	Function
662R500x.. AIR	6	SERVOCOMANDO SERRANDA ARIA	AIR DAMPER ACTUATOR
662R500x.. FGR	6	SERVOCOMANDO RICIRCOLO FUMI	FLUE GAS RECIRCULATION ACTUATOR
662R500x.. FUEL	6	SERVOCOMANDO COMBUSTIBILE	FUEL ACTUATOR
BT330	1	APPARECCHIATURA DI COMANDO	CONTROL SCHEME
EV1	5	ELETTROVALVOLA GAS LATO RETE	UPSTREAM GAS SOLENOID VALVE
EV2	5	ELETTROVALVOLA GAS LATO BRUCIATORE	DOWNSTREAM GAS SOLENOID VALVE
EVP1/2	5	ELETTROVALVOLE PILOTA GAS	PILOT GAS ELECTRO-VALVES
FU1	1	FUSIBILE AUSILIARIO	AUXILIARY FUSE
FU2	7	FUSIBILE	FUSE
IG	1	INTERRUTTORE GENERALE	MAINS SWITCH
IL	1	INTERRUTTORE LINEA AUSILIARI	AUXILIARY LINE SWITCH
KM-V	2	CONTATTORE MOTORE VENTILATORE (LINEA)	FAN MOTOR CONTACTOR (LINE)
KM-VD	2	CONTATTORE MOTORE VENTILATORE (TRIANGOLO)	FAN MOTOR CONTACTOR (DELTA)
KM-VS	2	CONTATTORE MOTORE VENTILATORE (STELLA)	FAN MOTOR CONTACTOR (STAR)
KT-V	2	TEMPORIZZATORE STELLA/TRIANGOLO	STAR/DELTA DELAYED RELAY
LB	2	LAMPADA SEGNALAZIONE BLOCCO BRUCIATORE	INDICATOR LIGHT FOR BURNER LOCK-OUT
LCM100	7	APPARECCHIATURA DI COMANDO	CONTROL SCHEME
LEV1	5	LAMPADA SEGNALAZIONE APERTURA [EV1]	INDICATOR LIGHT FOR OPENING OF ELECTRO-VALVE [EV1]
LEV2	5	LAMPADA SEGNALAZIONE APERTURA [EV2]	INDICATOR LIGHT FOR OPENING OF ELECTRO-VALVE [EV2]
LEVP	5	LAMPADA SEGNALAZIONE APERTURA [EVP1/2]	INDICATOR LIGHT FOR OPENING OF ELECTRO-VALVE [EVP1/2]
LF1	5	LAMPADA SEGNALAZIONE FUNZIONAMENTO BRUCIATORE	INDICATOR LIGHT BURNER OPERATION
LF2	5	LAMPADA SEGNALAZIONE FUNZIONAMENTO BRUCIATORE	INDICATOR LIGHT BURNER OPERATION
LPGMIN	3	LAMPADA SEGNALAZIONE PRESENZA GAS IN RETE	INDICATOR LIGHT FOR PRESENCE OF GAS IN THE NETWORK
LPGP	3	LAMPADA SEGNALAZIONE PRESSOSTATO GAS PILOTA	INDICATOR LIGHT FOR PRESENCE OF GAS IN THE PILOT NETWORK
LT	2	LAMPADA SEGNALAZIONE BLOCCO TERMICO MOTORE VENTILATORE	INDICATOR LIGHT FOR FAN MOTOR OVERLOAD THERMAL CUTOUT
LTA	3	LAMPADA SEGNALAZIONE TRASFORMATORE DI ACCENSIONE	IGNITION TRANSFORMER INDICATOR LIGHT
MB-DLE..Sx2	5	GRUPPO VALVOLE GAS	GAS VALVES GROUP
MBC..SEx2	5	GRUPPO VALVOLE GAS (ALTERNATIVO)	GAS VALVES GROUP (ALTERNATIVE)
MV	1	MOTORE VENTILATORE	FAN MOTOR
PA	1	PRESSOSTATO ARIA	AIR PRESSURE SWITCH
PGMAX	4	PRESSOSTATO GAS DI MASSIMA PRESSIONE (OPTIONAL)	MAXIMUM PRESSURE GAS SWITCH (OPTIONAL)
PGMIN/LT	3	PRESSOSTATO GAS DI MINIMA PRESSIONE E CONTROLLO PERDITE	MINIMUM GAS AND GAS LEAKAGE PRESSURE SWITCH

0	1	2	3	4	5	6	7	8	9

Sigla/Item	Foglio/Sheet	Funzione	Function
PGP	3	PRESSOSTATO PILOTA GAS	PILOT MINIMUM GAS PRESSURE SWITCH
POT	8	POTENZIOMETRO	POTENTIOMETER
PT1	8	TEMPERATURA CALDAIA	BOILER TEMPERATURE
PT2	8	TEMPERATURA ESTERNA	EXTERNAL TEMPERATURE
PT3	8	TEMPERATURA FUMI	FLUE GAS TEMPERATURE
QF-A	1	MAGNETOTERMICO PROTEZIONE ALIMENTAZIONE TRIFASE	THREE-PHASE POWER CIRCUIT BREAKER PROTECTION
QF-B	1	MAGNETOTERMICO PROTEZIONE LINEA AUSILIARI	AUXILIARY SUPPLY CIRCUIT BREAKER PROTECTION
QRAxx	4	SONDA UV RILEVAZIONE FIAMMA	UV FLAME DETECTOR
R1	8	RESISTENZA	RESISTOR
R2	8	RESISTENZA	RESISTOR
SD-4÷20mA	8	SEGNALE IN CORRENTE	CURRENT SIGNAL
ST	4	SERIE TERMOSTATI/PRESSOSTATI	SERIES OF THERMOSTATS OR PRESSURE SWITCHES
TA	3	TRASFORMATORE DI ACCENSIONE	IGNITION TRANSFORMER
TAB	4	TERMOSTATO/PRESSOSTATO ALTA-BASSA FIAMMA	HIGH-LOW THERMOSTAT/PRESSURE SWITCHES
TV	1	TERMICO MOTORE VENTILATORE	FAN MOTOR THERMAL
UI300	6	INTERFACCIA UTENTE	USER INTERFACE
WB1	1	BARRA DI TERRA	EARTH TERMINAL

Data 23/01/2019		PREC. 11	FOGLIO 12
Revisione 00			
Dis. N. 12 – 0349		SEGUE 13	TOTALE 13

VISTA LATO COMPONENTI

COMPONENTS SIDE VIEW

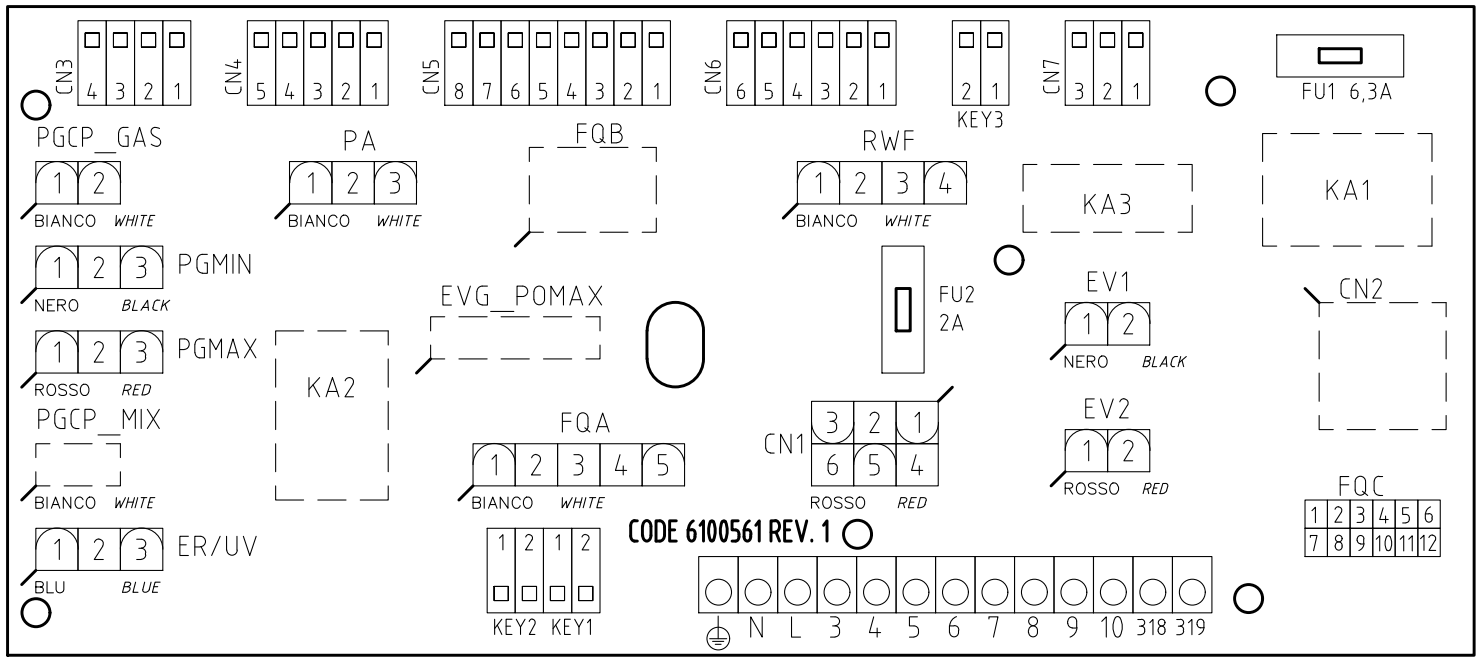

AUX1

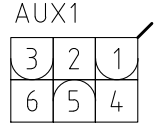

AUX2

Data 23/01/2019		PREC. 12	FOGLIO 13
Revisione 00			
Dis. N. 12 – 0349		SEGUE /	TOTALE 13