TG90-TG91-TG92
TG510-TG515
TG520-TG525

Light oil burners

MANUAL OF INSTALLATION - USE - MAINTENANCE

CIB UNIGAS

BURNERS - BRUCIATORI - BRULERS - BRENNER - QUEMADORES - ГОРЕЛКИ

M039212CA Rel.0.6 02/2019

DANGERS, WARNINGS AND NOTES OF CAUTION

THIS MANUAL IS SUPPLIED AS AN INTEGRAL AND ESSENTIAL PART OF THE PRODUCT AND MUST BE DELIVERED TO THE USER.

INFORMATION INCLUDED IN THIS SECTION ARE DEDICATED BOTH TO THE USER AND TO PERSONNEL FOLLOWING PRODUCT INSTALLATION AND MAINTENANCE.

THE USER WILL FIND FURTHER INFORMATION ABOUT OPERATING AND USE RESTRICTIONS, IN THE SECOND SECTION OF THIS MANUAL. WE HIGHLY RECOMMEND TO READ IT.

CAREFULLY KEEP THIS MANUAL FOR FUTURE REFERENCE.

1) GENERAL INTRODUCTION

- The equipment must be installed in compliance with the regulations in force, following the manufacturer's instructions, by qualified personnel.
- Qualified personnel means those having technical knowledge in the field of components for civil or industrial heating systems, sanitary hot water generation and particularly service centres authorised by the manufacturer.
- Improper installation may cause injury to people and animals, or damage to property, for which the manufacturer cannot be held liable.
- Remove all packaging material and inspect the equipment for integrity.

In case of any doubt, do not use the unit - contact the supplier.

The packaging materials (wooden crate, nails, fastening devices, plastic bags, foamed polystyrene, etc), should not be left within the reach of children, as they may prove harmful.

- Before any cleaning or servicing operation, disconnect the unit from the mains by turning the master switch OFF, and/or through the cut-out devices that are provided.
- Make sure that inlet or exhaust grilles are unobstructed.
- In case of breakdown and/or defective unit operation, disconnect the unit. Make no attempt to repair the unit or take any direct action.

Contact qualified personnel only.

Units shall be repaired exclusively by a servicing centre, duly authorised by the manufacturer, with original spare parts and accessories.

Failure to comply with the above instructions is likely to impair the unit's safety.

To ensure equipment efficiency and proper operation, it is essential that maintenance operations are performed by qualified personnel at regular intervals, following the manufacturer's instructions.

- When a decision is made to discontinue the use of the equipment, those parts likely to constitute sources of danger shall be made harmless.
- In case the equipment is to be sold or transferred to another user, or in case the original user should move and leave the unit behind, make sure that these instructions accompany the equipment at all times so that they can be consulted by the new owner and/or the installer.
- This unit shall be employed exclusively for the use for which it is meant. Any other use shall be considered as improper and, therefore, dangerous.

The manufacturer shall not be held liable, by agreement or otherwise, for damages resulting from improper installation, use and failure to comply with the instructions supplied by the manufacturer.The occurrence of any of the following circustances may cause explosions, polluting unburnt gases (example: carbon monoxide CO), burns, serious harm to people, animals and things:

- Failure to comply with one of the WARNINGS in this chapter
- Incorrect handling, installation, adjustment or maintenance of the burner
- Incorrect use of the burner or incorrect use of its parts or optional supply

2) SPECIAL INSTRUCTIONS FOR BURNERS

- The burner should be installed in a suitable room, with ventilation openings complying with the requirements of the regulations in force, and sufficient for good combustion.
- Only burners designed according to the regulations in force should be used.
- This burner should be employed exclusively for the use for which it was designed.
- Before connecting the burner, make sure that the unit rating is the same as delivery mains (electricity, gas oil, or other fuel).
- Observe caution with hot burner components. These are, usually, near to the flame and the fuel pre-heating system, they become hot during the unit operation and will remain hot for some time after the burner has stopped.

When the decision is made to discontinue the use of the burner, the user shall have qualified personnel carry out the following operations:

a Remove the power supply by disconnecting the power cord from the mains.

b Disconnect the fuel supply by means of the hand-operated shut-off valve and remove the control handwheels from their spindles.

Special warnings

- Make sure that the burner has, on installation, been firmly secured to the appliance, so that the flame is generated inside the appliance fire-box.
- Before the burner is started and, thereafter, at least once a year, have qualified personnel perform the following operations:

a set the burner fuel flow rate depending on the heat input of the appliance;

b set the flow rate of the combustion-supporting air to obtain a combustion efficiency level at least equal to the lower level required by the regulations in force;

c check the unit operation for proper combustion, to avoid any harmful or polluting unburnt gases in excess of the limits permitted by the regulations in force;

d make sure that control and safety devices are operating properly;

e make sure that exhaust ducts intended to discharge the products of combustion are operating properly;

f on completion of setting and adjustment operations, make sure that all mechanical locking devices of controls have been duly tightened;

g make sure that a copy of the burner use and maintenance instructions is available in the boiler room.

- In case of a burner shut-down, reser the control box by means of the RESET pushbutton. If a second shut-down takes place, call the Technical Service, **without trying to RESET further**.
- The unit shall be operated and serviced by qualified personnel only, in compliance with the regulations in force.

3) GENERAL INSTRUCTIONS DEPENDING ON FUEL USED

3a) ELECTRICAL CONNECTION

- For safety reasons the unit must be efficiently earthed and installed as required by current safety regulations.
- It is vital that all saftey requirements are met. In case of any doubt, ask for an accurate inspection of electrics by qualified personnel, since the manufacturer cannot be held liable for damages that may be caused by failure to correctly earth the equipment.
- Qualified personnel must inspect the system to make sure that it is adequate to take the maximum power used by the equipment shown on the equipment rating plate. In particular, make sure that the system cable cross section is adequate for the power absorbed by the unit.
- No adaptors, multiple outlet sockets and/or extension cables are permitted to connect the unit to the electric mains.
- An omnipolar switch shall be provided for connection to mains, as required by the current safety regulations.
- The use of any power-operated component implies observance of a few basic rules, for example:
  - do not touch the unit with wet or damp parts of the body and/or with bare feet;
  - do not pull electric cables;
  - do not leave the equipment exposed to weather (rain, sun, etc.) unless expressly required to do so;
  - do not allow children or inexperienced persons to use equipment;
- The unit input cable shall not be replaced by the user.
  In case of damage to the cable, switch off the unit and contact qualified personnel to replace.
  When the unit is out of use for some time the electric switch supplying all the power-driven components in the system (i.e. pumps, burner, etc.) should be switched off.

3b) FIRING WITH GAS, LIGHT OIL OR OTHER FUELS

GENERAL

- The burner shall be installed by qualified personnel and in compliance with regulations and provisions in force; wrong installation can cause injuries to people and animals, or damage to property, for which the manufacturer cannot be held liable.
- Before installation, it is recommended that all the fuel supply system pipes be carefully cleaned inside, to remove foreign matter that might impair the burner operation.
- Before the burner is commissioned, qualified personnel should inspect the following:

a the fuel supply system, for proper sealing;
b the fuel flow rate, to make sure that it has been set based on the firing rate required of the burner;
c the burner firing system, to make sure that it is supplied for the designed fuel type;
d the fuel supply pressure, to make sure that it is included in the range shown on the rating plate;
e the fuel supply system, to make sure that the system dimensions are adequate to the burner firing rate, and that the system is equipped with all the safety and control devices required by the regulations in force.

- When the burner is to remain idle for some time, the fuel supply tap or taps should be closed.

SPECIAL INSTRUCTIONS FOR USING GAS

Have qualified personnel inspect the installation to ensure that:

a the gas delivery line and train are in compliance with the regulations and provisions in force;
b all gas connections are tight;
c the boiler room ventilation openings are such that they ensure the air supply flow required by the current regulations, and in any case are sufficient for proper combustion.

- Do not use gas pipes to earth electrical equipment.
- Never leave the burner connected when not in use. Always shut the gas valve off.
- In case of prolonged absence of the user, the main gas delivery valve to the burner should be shut off.

Precautions if you can smell gas

a do not operate electric switches, the telephone, or any other item likely to generate sparks;
b immediately open doors and windows to create an air flow to purge the room;
c close the gas valves;
d contact qualified personnel.

- Do not obstruct the ventilation openings of the room where gas appliances are installed, to avoid dangerous conditions such as the development of toxic or explosive mixtures.

DIRECTIVES AND STANDARDS

Gas burners

European directives

-Regulation 2016/426/UE (appliances burning gaseous fuels)
-2014/35/UE (Low Tension Directive)
-2014/30/UE (Electromagnetic compatibility Directive)
-2006/42/EC (Machinery Directive)

Harmonized standards

-UNI EN 676 (Automatic forced draught burners for gaseous fuels)
-EN 55014-1 (Electromagnetic compatibility- Requirements for house hold appliances, electric tools and similar apparatus)
-EN 60204-1:2006 (Safety of machinery – Electrical equipment of machines.)
-CEI EN 60335-1 (Specification for safety of household and similar electrical appliances);
-CEI EN 60335-2-102 (Household and similar electrical appliances. Safety. Particular requirements for gas, oil and solid-fuel burning appliances having electrical connections).
-UNI EN ISO 12100:2010 (Safety of machinery - General principles for design - Risk assessment and risk reduction);

Light oil burners

European directives

-2014/35/UE (Low Tension Directive)
-2014/30/UE (Electromagnetic compatibility Directive)
-2006/42/EC (Machinery Directive)

Harmonized standards

-UNI EN 267-2011(Automatic forced draught burners for liquid fuels)
-EN 55014-1 (Electromagnetic compatibility- Requirements for house hold appliances, electric tools and similar apparatus)
-EN 60204-1:2006 (Safety of machinery – Electrical equipment of machines.)
-CEI EN 60335-1 (Specification for safety of household and similar electrical appliances);
-CEI EN 60335-2-102 (Household and similar electrical appliances. Safety. Particular requirements for gas, oil and solid-fuel burning appliances having electrical connections).
-UNI EN ISO 12100:2010 (Safety of machinery - General principles for design - Risk assessment and risk reduction);

National Standard

-UNI 7824 (Atomizing burners of the monobloc type. Characteristics and test methods)

Heavy oil burners

European Directives

-2014/35/UE (Low Tension Directive)
-2014/30/UE (Electromagnetic compatibility Directive)
-2006/42/EC (Machinery Directive)

Harmonized standards

-UNI EN 267(Automatic forced draught burners for liquid fuels)
-EN 55014-1 (Electromagnetic compatibility- Requirements for house hold appliances, electric tools and similar apparatus)
-EN 60204-1:2006 (Safety of machinery – Electrical equipment of machines.)
-CEI EN 60335-1 (Specification for safety of household and similar electrical appliances);
-CEI EN 60335-2-102 (Household and similar electrical appliances. Safety. Particular requirements for gas, oil and solid-fuel burning appliances having electrical connections).
-UNI EN ISO 12100:2010 (Safety of machinery - General principles for design - Risk assessment and risk reduction);

Norme nazionali / National Standard

-UNI 7824 (Atomizing burners of the monobloc type. Characteristics and test methods.

Gas - Light oil burners

European Directives

-Regulation 2016/426/UE (appliances burning gaseous fuels)
-2014/35/UE (Low Tension Directive)
-2014/30/UE (Electromagnetic compatibility Directive)
-2006/42/EC (Machinery Directive)

Harmonized standards

-UNI EN 676 (Automatic forced draught burners for gaseous fuels)
-UNI EN 267(Automatic forced draught burners for liquid fuels)
-EN 55014-1 (Electromagnetic compatibility- Requirements for house hold appliances, electric tools and similar apparatus)
-EN 60204-1:2006 (Safety of machinery – Electrical equipment of machines.)
-CEI EN 60335-1 (Specification for safety of household and similar electrical appliances);
-CEI EN 60335-2-102 (Household and similar electrical appliances. Safety. Particular requirements for gas, oil and solid-fuel burning appliances having electrical connections).
-UNI EN ISO 12100:2010 (Safety of machinery - General principles for design - Risk assessment and risk reduction);

Norme nazionali / National Standard

-UNI 7824 (Atomizing burners of the monobloc type. Characteristics and test methods.

Gas - Heavy oil burners

European directives:

-Regulation 2016/426/UE (appliances burning gaseous fuels)
-2014/35/UE (Low Tension Directive)
-2014/30/UE (Electromagnetic compatibility Directive)
-2006/42/EC (Machinery Directive)

Harmonized standards

-UNI EN 676 (Automatic forced draught burners for gaseous fuels)
-EN 55014-1 (Electromagnetic compatibility- Requirements for house hold appliances, electric tools and similar apparatus)
-EN 60204-1:2006 (Safety of machinery – Electrical equipment of machines.)
-CEI EN 60335-1 (Specification for safety of household and similar electrical appliances);
-CEI EN 60335-2-102 (Household and similar electrical appliances. Safety. Particular requirements for gas, oil and solid-fuel burning appliances having electrical connections).
-UNI EN ISO 12100:2010 (Safety of machinery - General principles for design - Risk assessment and risk reduction);

National Standard

- UNI 7824 (Atomizing burners of the monobloc type. Characteristics and test methods.

Industrial burners

European directives

-Regulation 2016/426/UE (appliances burning gaseous fuels)
-2014/35/UE (Low Tension Directive)
-2014/30/UE (Electromagnetic compatibility Directive)
-2006/42/EC (Machinery Directive)

Harmonized standards

-EN 55014-1 (Electromagnetic compatibility- Requirements for house hold appliances, electric tools and similar apparatus)
-EN 746-2 (Industrial thermoprocessing equipment - Part 2: Safety requirements for combustion and fuel handling systems)
-UNI EN ISO 12100:2010 (Safety of machinery - General principles for design - Risk assessment and risk reduction);
-EN 60204-1:2006 (Safety of machinery – Electrical equipment of machines.)
-EN 60335-2 (Electrical equipment of non-electric appliances for household and similar purposes. Safety requirements)

Burner data plate

For the following information, please refer to the data plate:

- burner type and burner model: must be reported in any communication with the supplier
- burner ID (serial number): must be reported in any communication with the supplier
- date of production (year and month)
- information about fuel type and network pressure

Type	--
Model	--
Year	--
S.Number	--
Output	--
Oil Flow	--
Fuel	--
Category	--
Gas Pressure	--
Viscosity	--
El.Supply	--
El.Consump.	--
Fan Motor	--
Protection	--
Drwaing n°	--
P.I.N.	--

SYMBOLS USED

WARNING! Failure to observe the warning may result in irreparable damage to the unit or damage to the environment

DANGER! Failure to observe the warning may result in serious injuries or death.

WARNING! Failure to observe the warning may result in electric shock with lethal consequences

Figures, illustrations and images used in this manual may differ in appearance from the actual product.

GENERAL FEATURES

This series of industrial burners is designed for all those applications that require big-sized air fans or air-flue heat exchangers to be installed in sound-proof areas to reduce noise. They can be provided with built-in or separately-mounted control panel (console or wall-mounted.

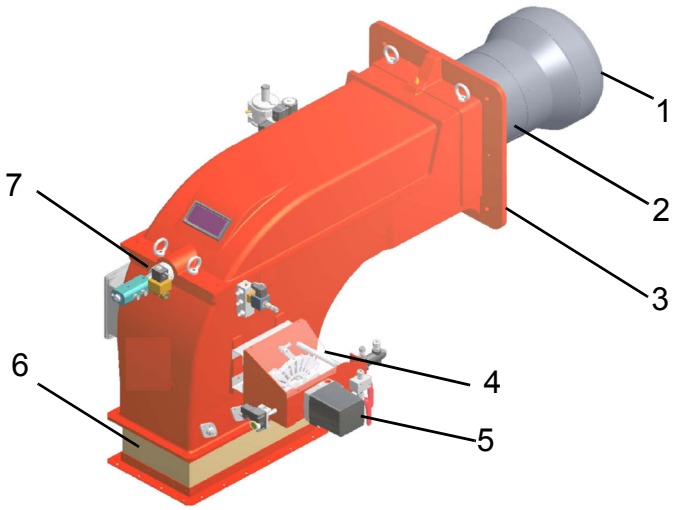

Note: the figure is indicative only

1 Combustion head
2 Blast tube
3 Burner flange
4 Adjusting cam
5 Actuator
6 Air inlet flange
7 Oil gun

Fig. 1

Light oil operation:the fuel coming from the supply line, is pushed by the pump to the nozzle and then into the combustion chamber, where the mixture between fuel and air takes place and consequently the flame.
In the burners, the mixture bertween fuel and air, to perform clean and efficient combustion, is activated by atomisation of oil into very small particles. This process is achieved making pressurised oil passing through the nozzle.
The pump main function is to transfer oil from the tank to the nozzle in the desired quantity and pressure. To adjust this pressure, pumps are provided with a pressure regulator (except for some models for which a separate regulating valve is provided). Other pumps are provided with two pressure regulators: one for the high and one for low pressure (in double-stage systems with one nozzle).

The adjustable combustion head can improve the burner performance. The combustion head determines the energetic quality and the geometry of the flame. Fuel and comburent are routed into separated ways as far as the zone of flame generation (combustion chamber).
The control panel, placed on the burner front side, shows each operating stage.

How to select the burner

To check if the burner is suitable for the boiler to which it must be installled, the following parameters are needed:

- fuel
- furnace input, in kW or kcal/h (kW = kcal/h / 860);
- boiler type;
- combustion chamber type (3-smoke pass, reverse flame, other)
- temperature or pressure of the thermal carrier fluid
- Comburent air temperature
- Air duct positioning
- Pressure in the combustion chamber
- Elevation (altitude) of burner installation
- Gas train (only for gas burners)
- Pumping unit (only for light-oil or heavy-oil burners)
- Air fan
- Bilt-in or separated control panel
- backpressure (data are available on the boiler's ID plate or in the user's manual).

Burners provided with built-in control panel are designed for IP40 index of protection. For other values of IP, please contact the manifacturer Technical Dpt.

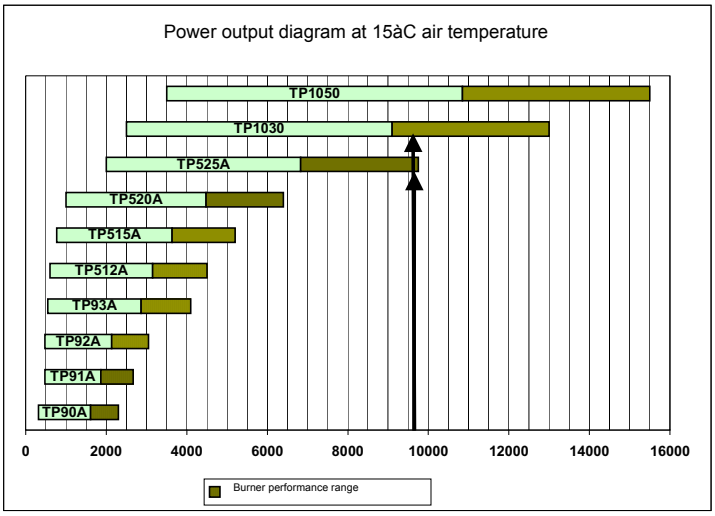

Data requested:

- furnace input;
- air temperature
- altitude
- generator pressure or temperature

Example:

- furnace input: 9600kW
- air temperature: 15°C
- altitude: 0m

Fig. 2

See the diagram in Fig. 2, as to find the burners that better suite the power range requested in the exmple (9600kW). Once the models are founded out, the choice regards technical and economical features. Technical features can be summarised in a higher modulation ratio (fewer start-ups, less consumption, fewer swigings in the generator temperature and pressure values.

Burner model identification

Burners are identified by burner type and model. Burner model identification is described as follows.

Type	**TG92**	Model	**G-.**	**PR.**	**S.**	**.**	**A.**
	(1)		**(2)**	**(3)**	**(4)**	**(5)**	**(6)**

(1) BURNER TYPE	**TG90-TG91-TG92-TG510-TG515-TG520-TG525**	
(2) FUEL	**G -** Light oil	**A -** Biodiesel
(3) OPERATION (Available versions)	**PR -** Progressive	**MD -** Fully modulating
(4) BLAST TUBE	**S -** Standard	**L -** Extended
(5) DESTINATION COUNTRY	* - see data plate	
(6) BURNER VERSION	G - Separate control panel and junction box E - No control panel, junction box only	

Technical specifications

BURNERS		TG90	TG91	TG92
Output	min. -max. kW	264 - 1900	698 - 2093	849 - 2558
Light oil rate	min. -max. kg/h	22 - 160	59 - 176	72 - 215
Fuel		Light oil		
Viscosity		1.3 °E @20°C		
Power supply		400V 3N ~ 50Hz		
Fan motor	kW	see fan ID plate		
Pump motor	kW	1.1	0.55	1.1
Total power consumption	kW	1.6	1.05	1.6
Index of protection		IP40		
Operation		Progressive - Fully modulating		
Operating temperature	°C	-10 ÷ +50		
Storage temperature	°C	-20 ÷ +60		
Working service *		Intermittent		

BURNERS		TG510	TG515	TG520	TG525
Output	min. -max. kW	1314 - 3953	1628 - 4884	2326 - 6977	2000 - 9750
Light oil rate	min. -max. kg/h	111 - 331	137 - 411	196 - 588	168 - 821
Fuel		Light oil			
Viscosity		1.3 °E @20°C			
Power supply		400V 3N ~ 50Hz			
Fan motor	kW	see fan ID plate			
Pump motor	kW	1.1	1.5	1.5	4
Total power consumption	kW	1.6	2	2	4.5
Operation		Progressive - Fully modulating			
Index of protection		IP40			
Operating temperature	°C	-10 ÷ +50			
Storage temperature	°C	-20 ÷ +60			
Working service *		Intermittent			

*** NOTE ON THE WORKING SERVICE: the Siemens LMO.. control box automatically stops after 24h of continuous working. The control box immediately starts up, automatically. If the burner is provided with Siemens LOA.. or LAL.. control box one controlled shutdown must be performed after 24 hours of continuous operation, for safety reasons.**

Output diagram (air temperature = 15°C)

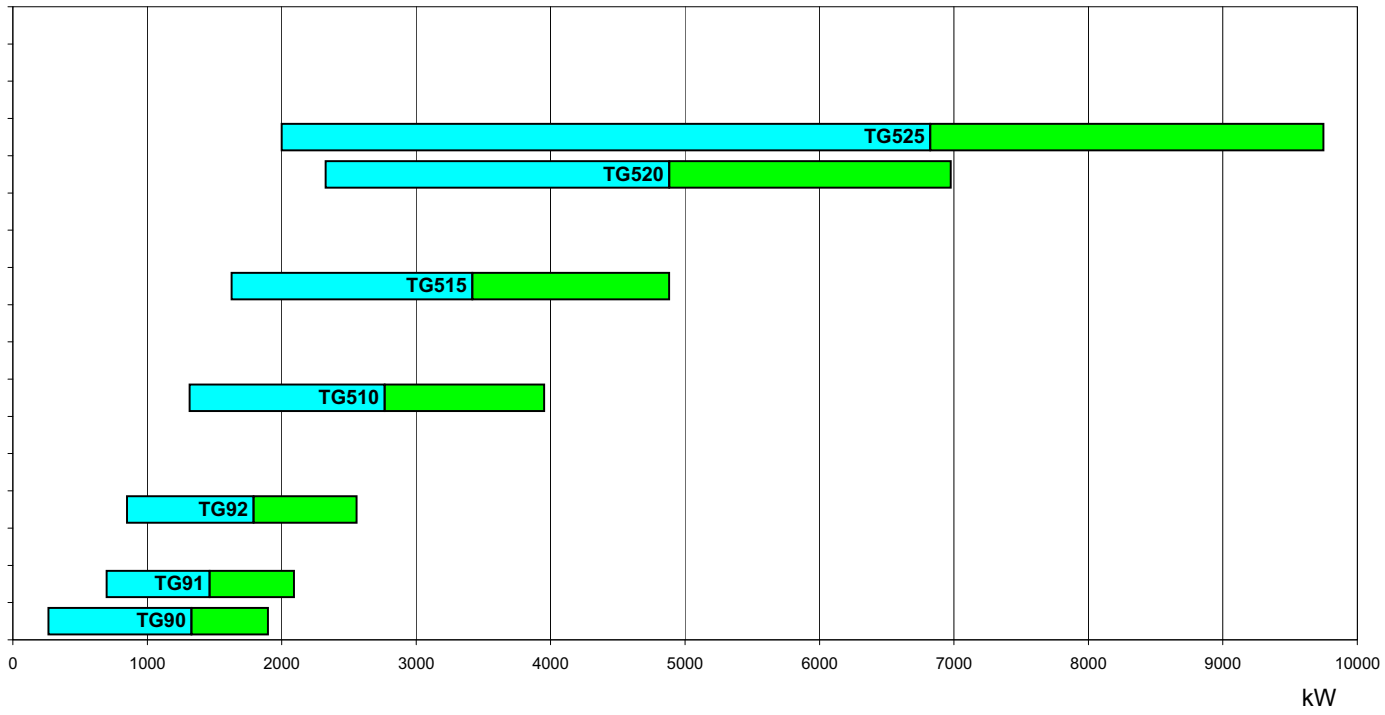

Burner performance range

Performance range

To get the input in kcal/h, multiply value in kW by 860. Data are referred to standard conditions: 1013mbar, 15°C

Fan installation

ATTENTION! The bellows unit provided is made of canvas and is provided with blocking spacers to avoid breaking it during installation: first place the bellows unit between flanges, then remove the spacers. Canvas has to be stretched after the installation, but not stressed.

ATTENTION! the air duct dimensioning must be perforformed according to the flow rate, the temperature, the distance between the fan and the burner and according to the fan features as well..

ATTENTION! It is suggested to install the fan on vibration-damping supports in order to reduce vibration propagation.

Connect the air duct to the burner by means of the bellows unit provided together with the burner (see the picture below).

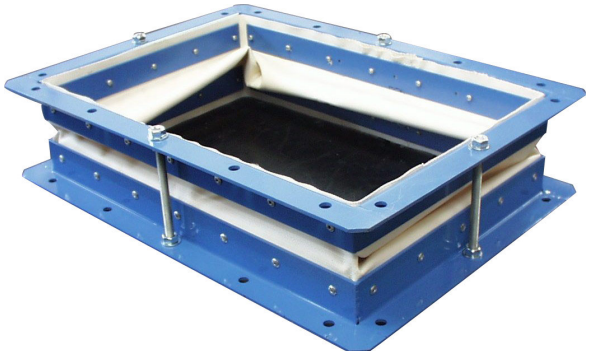

Overall dimensions (mm)

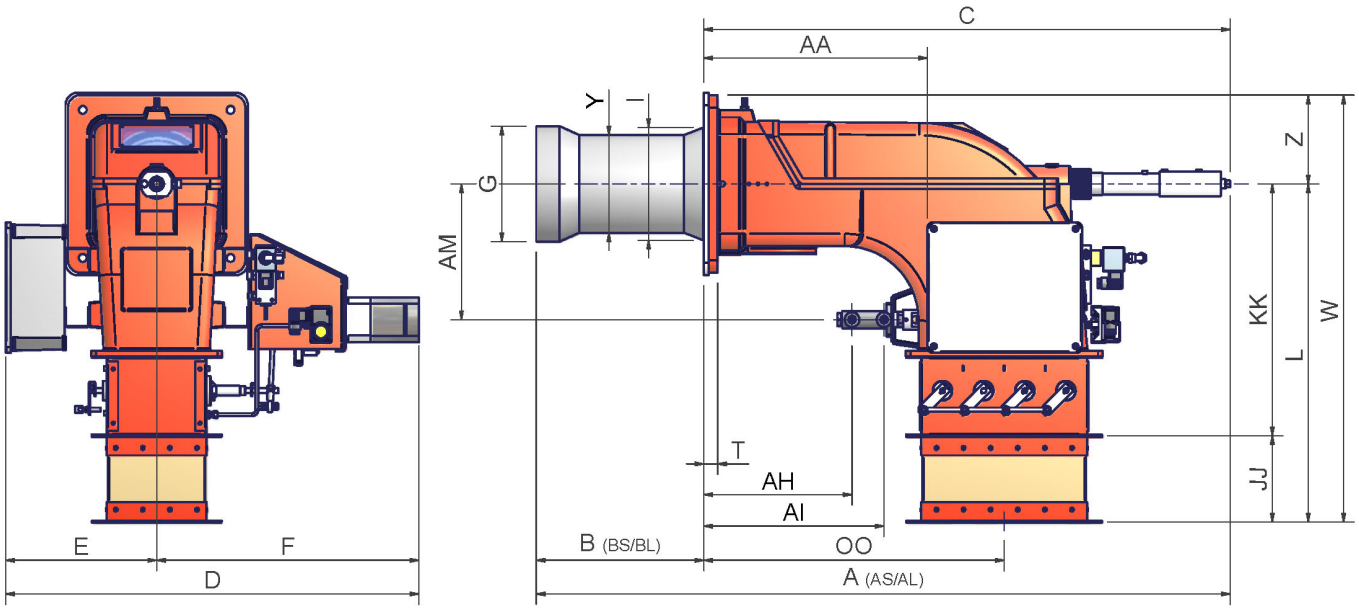

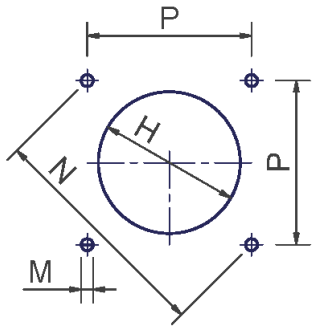

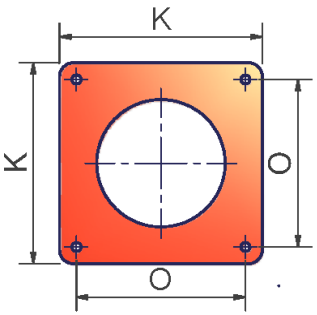

Boiler recommended drilling plate and burner flange

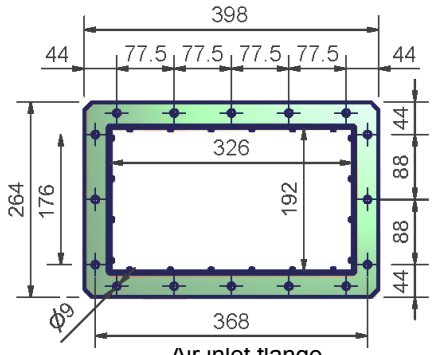

Air inlet flange

	A(S*)	A(L*)	AA	AH	AI	AM	B(S*)	B(L*)	C	CC	D	E	F	G	H	I	JJ	K	KK	L	M	N	Omin	Omax	OO	P	T	W	Y	Z
TG90	1356	1506	454	301	366	275	340	490	1090	307	840	307	533	234	276	228	175	360	510	685	M14	424	300	300	610	300	35	865	228	180
TG91	1317	1490	454	301	366	275	300	488	1017	307	840	307	533	238	268	228	175	360	510	685	M12	417	280	310	610	295	28	865	228	180
TG92	1311	1484	454	301	366	275	294	491	1017	307	840	307	533	266	296	228	175	360	510	685	M12	417	280	310	610	295	28	865	228	180

* S: measure referred to burner provided with standard blast tube * L: measure referred to burner provided with extended blast tube

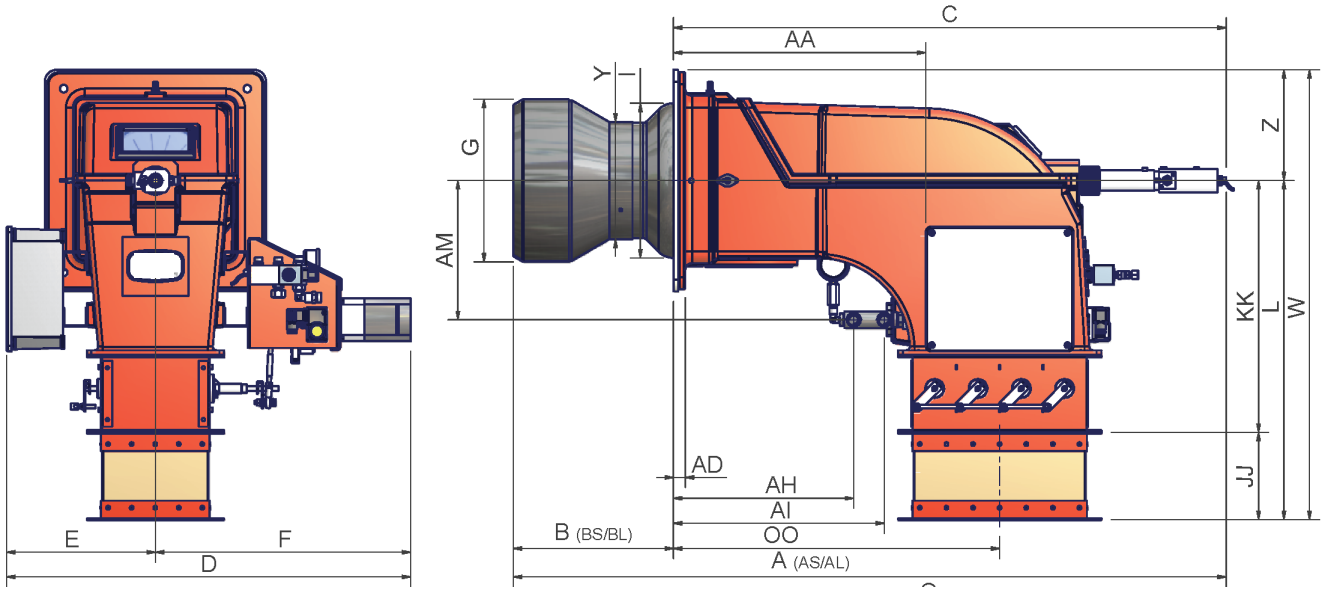

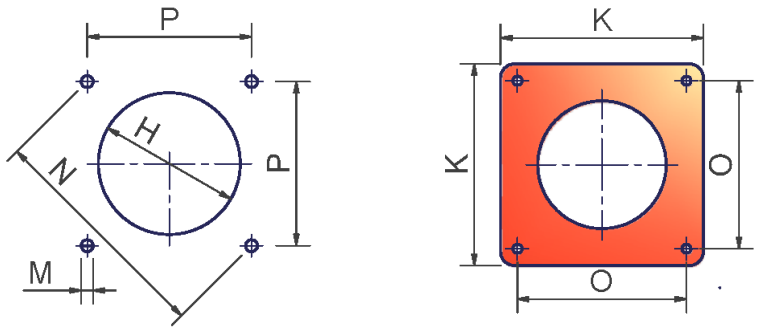

Boiler recommended drilling template and burner flange

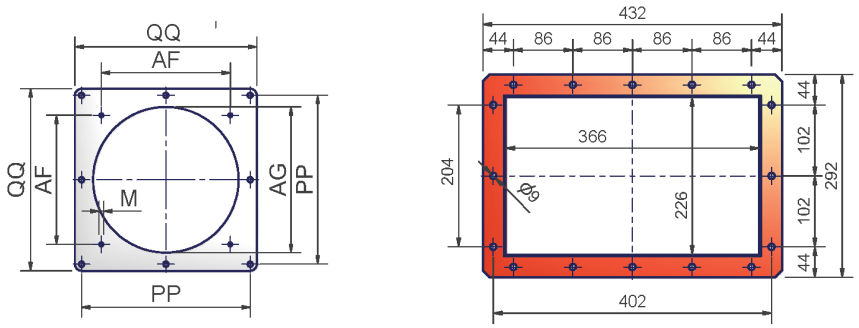

Counterflange and air inlet flange

	A(S*)	A(L*)	AA	AD	AF	AG	AH	AI	AM	B(S*)	B(L*)	C	D	E	F	G	H	I	JJ	K	KK	L	M	N	O	OO	P	PP	QQ	W	Y	Z
TG510	1485	1705	536	25	x	x	383	448	295	300	520	1175	858	316	542	329	369	328	185	460	534	719	M14	552	390	693	390	x	x	954	328	235
TG515	1485	1705	536	25	x	x	383	448	295	300	520	1175	858	316	542	350	390	328	185	460	534	719	M14	552	390	693	390	x	x	954	328	235
TG520	1485	1705	536	25	x	x	383	448	295	300	520	1175	858	316	542	370	410	328	185	460	534	719	M14	552	390	693	390	x	x	954	328	235
TG525	1705	x	536	25	390**	440**	x	x	x	520	x	1175	858	316	542	434	484**	328	185	460	534	719	M14	552	390	693	390	510**	550**	954	340	235

* S: measure referred to burner provided with standard blast tube * L: measure referred to burner provided with extended blast tube

** Fit a counterflange between burner and boiler

MOUNTINGS AND CONNECTIONS

Packing

The burners and accesories are dispatched in wooden packages.

Packing cases of this kind are affected by humidity and are not suitable for stacking. The following are placed in each packing case.

- burner;
- light oil flexible hoses;
- control panel
- oil pumping unit;
- gasket to be inserted between the burner and the boiler;
- envelope containing this manual.

To get rid of the burner packing, follow the procedures laid down by current laws on disposal of materials.

Handling the burner

⚠	**ATTENTION! the lfting and moving operations must be carried out by specialised and trained personnel. If these operations are not carried out perfectly, there is the residual risk of the burner to overturn and fall down.**
	As for moving the burner, use means suited for the weight to sustain (see paragraph "Technical specifications").

The burner is provided with eyebolts, for handling operations.

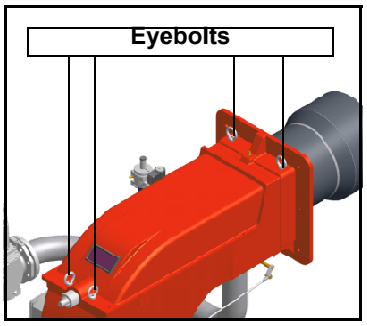

Fitting the burner to the boiler

1 To perform the installation, it is necessary to drill the boiler door as described on paragraph "Overall dimensions";
2 screw the studbolts (5) on the boiler door, according to the drilling plate (see paragraph "Overall dimensions");
3 move the burner towards the boiler: lift the burner by means of the eyebolts placed on its top side;
4 remove the balst tube, by loosening the three screws beside the burner flange;
5 place the the ceramic fibre plait on the burner flange;
6 replace the blast tube: before fastening completely the screws, avoid any misalignement between the blast tube axis and the combustion head axis;
7 install the burner to the boiler;
8 fix the burner to the stud bolts, by means of the fixing nuts, according to Fig. 3.
9 After fitting the burner to the boiler, ensure that the gap between the blast tube and the refractory lining is sealed with appropriate insulating material (ceramic fibre cord or refractory cement).

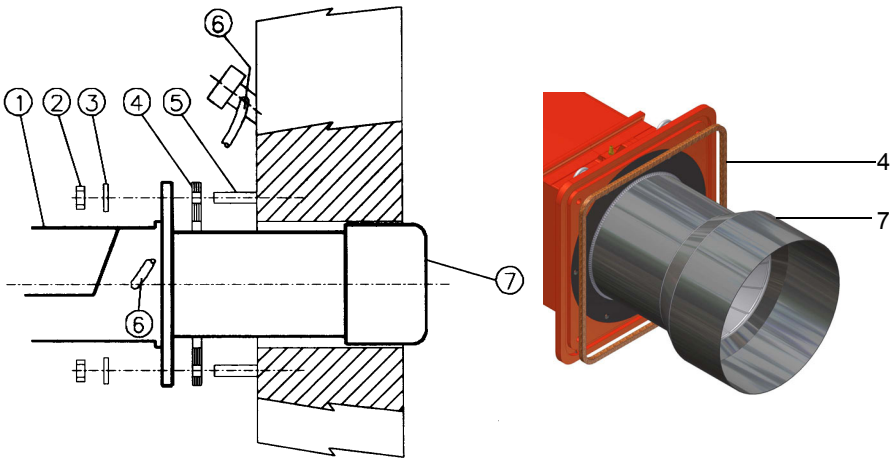

Fig. 3

Keys

1 Burner
2 Fixing nut
3 Washer
4 Ceramic fibre plait
5 Stud bolt
7 Blast tube

Fan installation

Pay attention when designing the air duct: dimensioning must be performed according to the flow rate, the temperature, the distance between the fan and the burner and according to the fan features as well.

⚠	**ATTENTION!** The bellows unit provided is made of canvas and is provided with blocking spacers to avoid breaking it during installation: **first** place the bellows unit between flanges, **then** remove the spacers. Canvas has to be stretched after the installation, but not stressed.

Matching the burner to the boiler

The burners described in this manual have been tested with combustion chambers that comply with EN676 regulation and whose dimensions are described in the diagram . In case the burner must be coupled with boilers with a combustion chamber smaller in diameter or shorter than those described in the diagram, please contact the supplier, to verify that a correct matching is possible, with respect of the application involved. To correctly match the burner to the boiler verify the necessary input and the pressure in combustion chamber are included in the burner performance curve; otherwise the choice of the burner must be revised consulting the burner manufacturer. To choose the blast tube lenght follow the instructions of the boiler manufacturer. In absence of these consider the following:

- Cast-iron boilers, three pass flue boilers (with the first pass in the rear part): the blast tube must protrude no more than 100 mm into the combustion chamber.
- Pressurised boilers with flame reversal: in this case the blast tube must penetrate at least 50 - 100 mm into combustion chamber in respect to the tube bundle plate.
- The length of the blast tubes does not always allow this requirement to be met, and thus it may be necessary to use a suitably-sized spacer to move the burner backwards or to design a blast tube tha suites the utilisation (please, contact the manifacturer).

Connection diagram of the air pressure switch to the burner air conduct

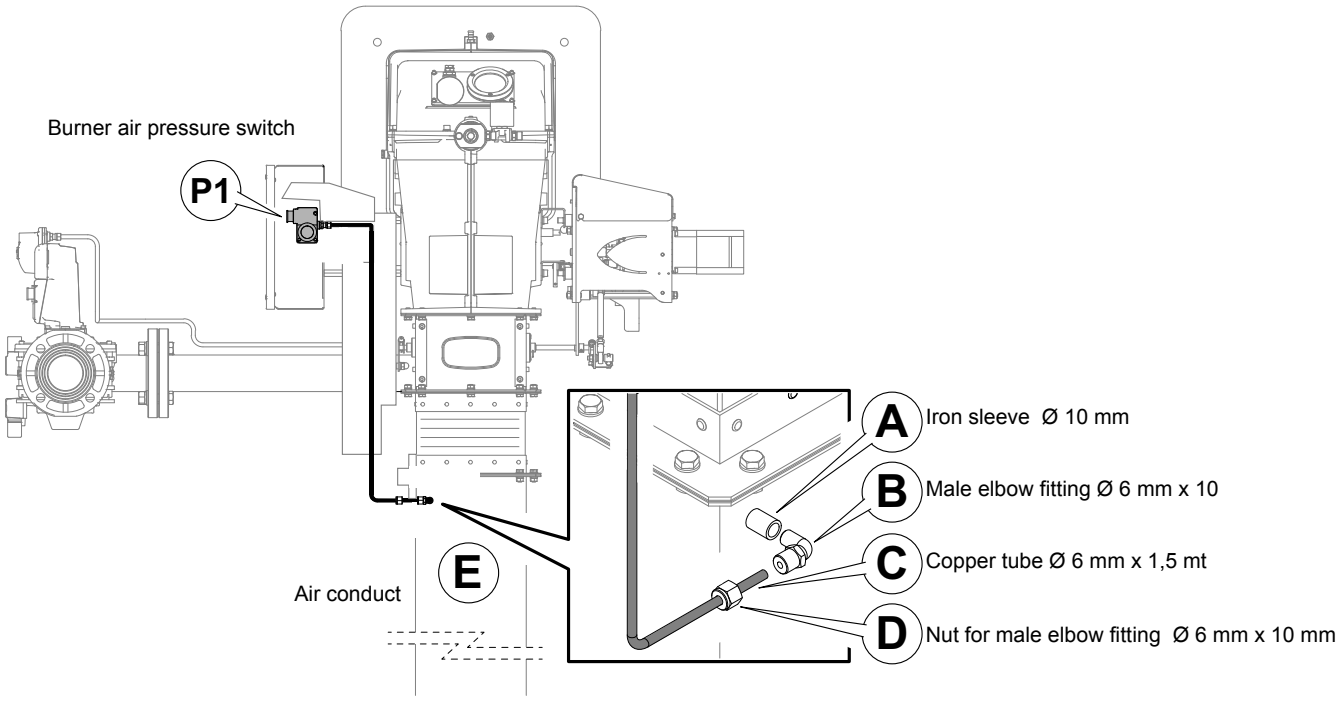

Copper tube connection Ø 6 mm:

- Drill the air duct (with hole from Ø 10 mm);
- Fit sleeve **A** (Ø 10 mm) and weld it on channel **E**;
- Assemble in sequence the **B-D** details on the tube (Ø 6 mm) **C** appropriately shaped up to the connection on the air pressure switch (**P1**).

Hydraulic diagrams for light oil supplying circuits

Fig. 4 - Gravity circuit

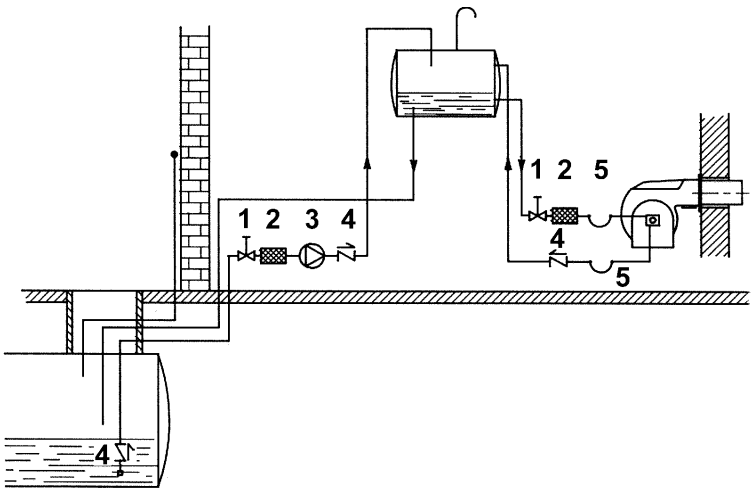

Fig. 5 - Ring circuit

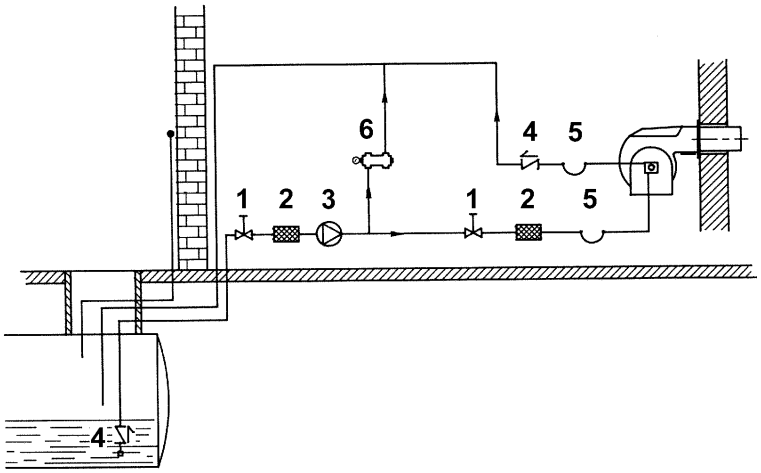

Fig. 6 - Suction circuit

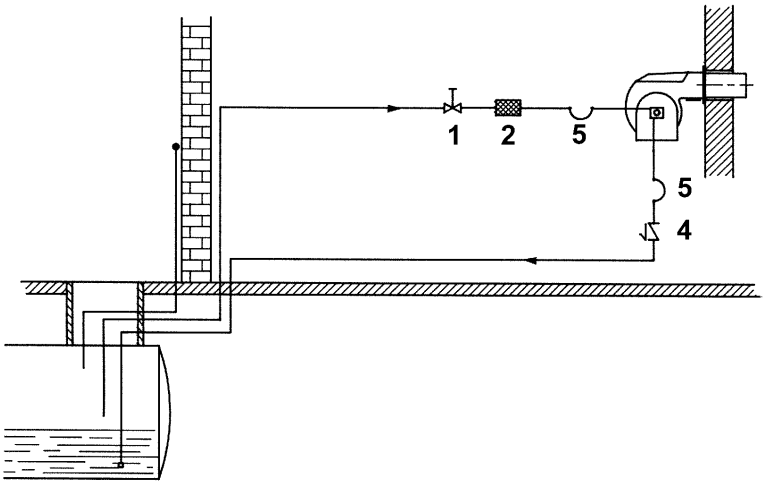

Key

1 Manual valve
2 Light oil filter
3 Light oil feeding pump
4 One way valve
5 Flexible hoses
6 Relief valve

NOTE: in plants where gravity or ring feed systems are provided, install an automatic interception device (see n. 4 - Fig. 7).

Installation diagram of light oil pipes

PLEASE READ CAREFULLY THE "WARNINGS" CHAPTER AT THE BEGINNING OF THIS MANUAL.

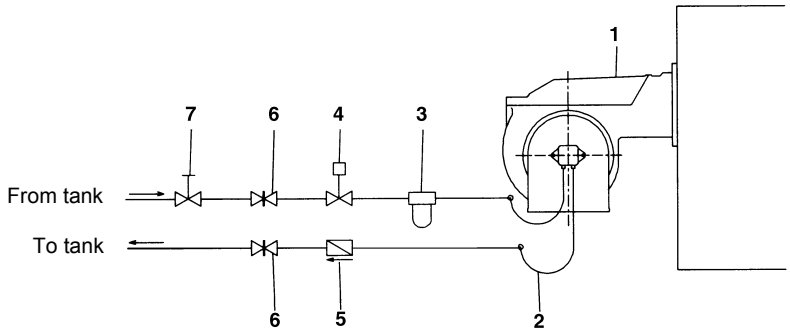

Fig. 7 - Double-pipe system

The burner is supplied with filter and flexible hoses, all the parts upstream the filter and downstream the return flexible hose, must be installed by the customer. As far as the hoses connection, see the related paragraph.

Key

1 Burner
2 Flexible hoses (fitted)
3 Light oil filter (fitted)
4 Automatic interceptor (*)
5 One-way valve (*)
6 Gate valve
7 Quick-closing gate-valve (outside the tank or boiler rooms)

(*) Only for installations with gravity, siphon or forced circulation feed systems. If the device installed is a solenoid valve, a timer must be installed to delay the valve closing.
The direct connection of the device without a timer may cause pump breaks.

The pumps that are used can be installed both into single-pipe and double-pipe systems.

Single-pipe system: a single pipe drives the oil from the tank to the pump's inlet. Then, from the pump, the pressurised oil is driven to the nozzle: a part comes out from the nozzle while the othe part goes back to the pump. In this system, the by-pass pulg, if provided, must be removed and the optional return port, on the pump's body, must be sealed by steel plug and washer.

Double-pipe system: as for the single pipe system, a pipe that connects the tank to the pump's inlet is used besides another pipe that connects the pum's return port to the tank, as well. The excess of oil goes back to the tank: this installation can be considered self-bleeding. If provided, the inside by-pass plug must be installed to avoid air and fuel passing through the pump.

Burners come out from the factory provided for double-stage systems. They can be suited for single-pipe system (recommended in the case of gravity feed) as decribed before.

To change from a 1-pipe system to a 2-pipe-system, insert the by-pass plug **G** (as for ccw-rotation- referring to the pump shaft).

Caution: Changing the direction of rotation, all connections on top and side are reversed.

Suntec TA

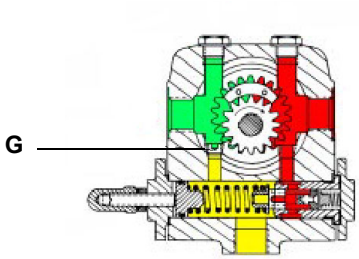

Suntec T

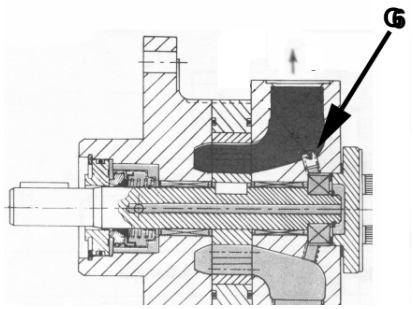

Bleed

Bleeding in two-pipe operation is automatic : it is assured by a bleed flat on the piston. In one-pipe operation, the plug of a pressure gauge port must be loosened until the air is evacuated from the system.

Light oil pumps

The pumps provided with these burners can be

- Suntec TA
- Suntec T

Suntec TA..	
Oil viscosity	3 ÷ 75 cSt
Oil temperature	0 ÷ 150°C
Min. suction pressure	- 0.45 bar to avoid gasing
Max. suction pressure	5 bar
Max. return pressure	5 bar
Rotation speed	3600 rpm max.

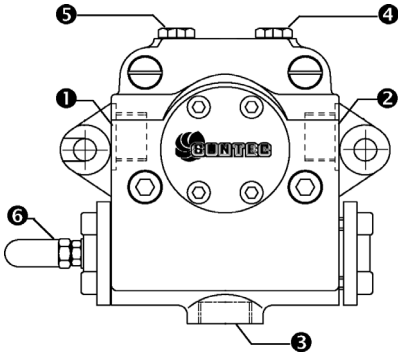

1 Inlet G1/2
2 To the nozzle G1/2
3 Return G1/2
4 Pressure gauge port G1/4
5 Vacuum gauge port G1/4
6 Pressure governor

Suntec T..	
Viscosity	3 - 75 cSt
Oil temperature	0 - 150 °C
Minimum suction pressure	- 0.45 bar to prevent gasing
Maximum suction pressure	5 bar
Rated speed	3600 rpm max.

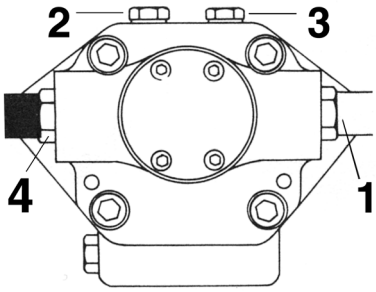

Key
1 Inlet G3/4
2 Pressure gauge port G1/4
3 Vacuum gauge port to measure the inlet vacuum G1/4
4 To pressure adjusting valve G3/4

"Note: pump with “C” rotation.

Suntec TV Pressure governor

Pressure adjustment

Remove cap-nut 1 and the gasket 2, unscrew the lock nut 4. To increase pressure, twist adjusting screw 3 clockwise.

To decrease the pressure, twist screw counterclockwise. Tight the lock nut 4, refit the gasket 2 and the cap nut 1.

Key
1 Cap nut
2 Gasket
3 Adjusting screw
4 Lock nut
5 Gasket

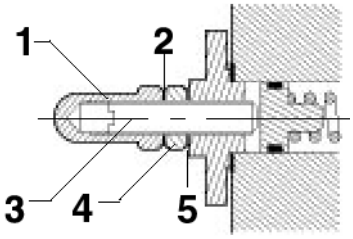

Fig. 8

Assembling the light oil flexible hoses

To connect the flexible light oil hoses to the pump, proceed as follows, according to the pump provided:

1 remove the closing nuts **A** and **R** on the inlet and return connections of the pump;
2 screw the rotating nut of the two flexible hoses on the pump **being careful to avoid exchanging the inlet and return lines**: see the arrows marked on the pump that show the inlet and the return (see prevoius paragraph).

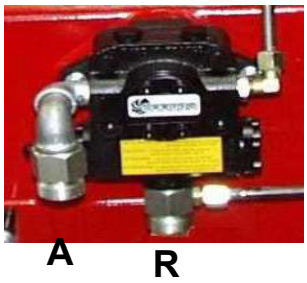

Suntec TA

Connecting the burner to the light oil pumping unit

Follow the scheme in the picture below to connect the burner to the oil pumping unit. The pump sends the oil coming from the tank to the burner. The pressure governor makes the oil reach the nozzle at the required pressure, while the excess of oil goes back to the tank. To change the delivery pressure act on the VRM adjusting screw of the delivery pressure governor.

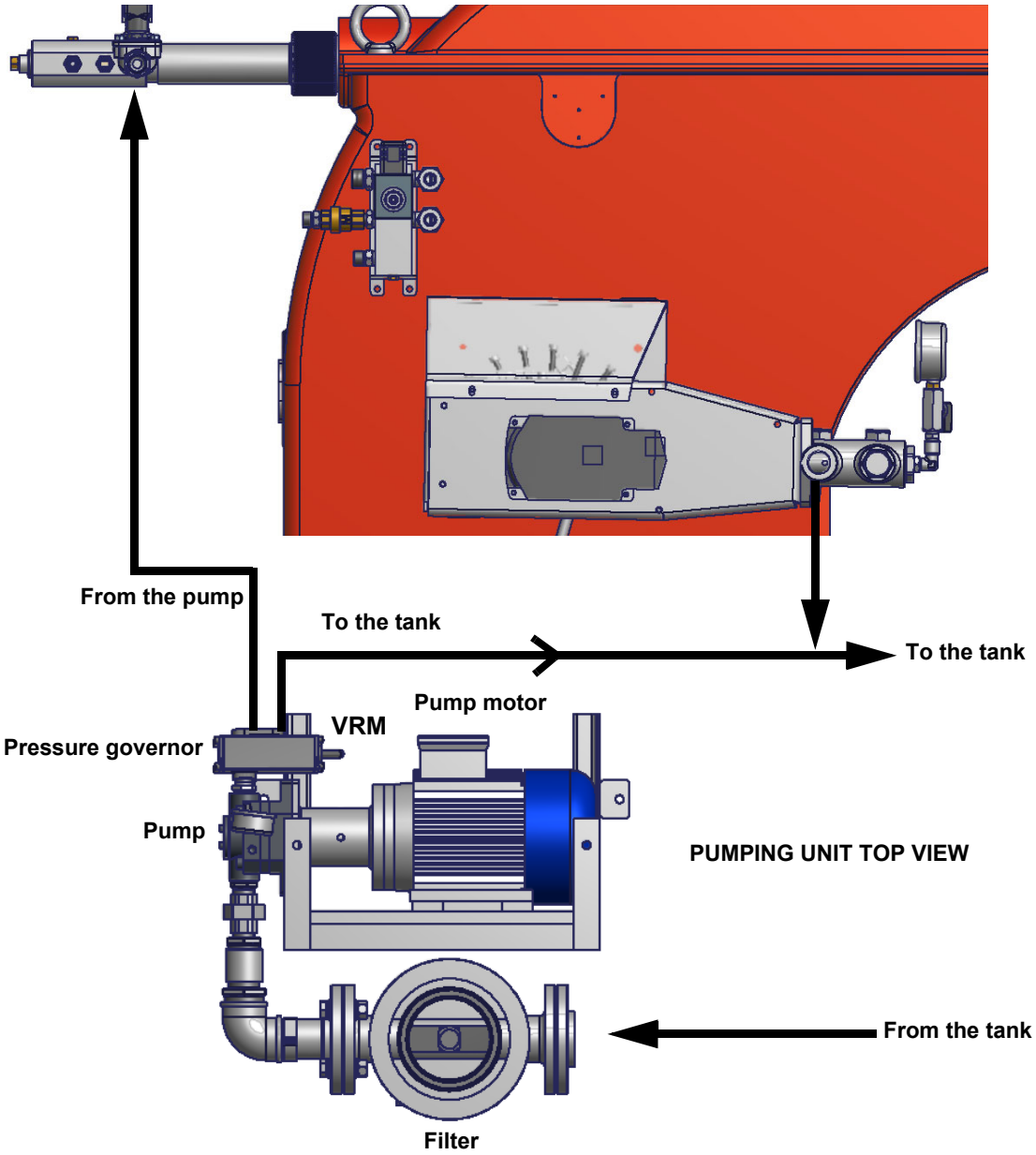

About the use of fuel pumps

- Make sure that the by-pass plug is not used in a single pipe installation, because the fuel unit will not function properly and damage to the pump and burner motor could result.
- Do not use fuel with additives to avoid the possible formation over time of compounds which may deposit between the gear teeth, thus obstructing them.
- After filling the tank, wait before starting the burner. This will give any suspended impurities time to deposit on the bottom of the tank, thus avoiding the possibility that they might be sucked into the pump.
- On initial commissioning a "dry" operation is foreseen for a considerable length of time (for example, when there is a long suction line to bleed). To avoid damages inject some lubrication oil into the vacuum inlet.
- Care must be taken when installing the pump not to force the pump shaft along its axis or laterally to avoid excessive wear on the joint, noise and overloading the gears.
- Pipes should not contain air pockets. Rapid attachment joint should therefore be avoided and threaded or mechanical seal junctions preferred. Junction threads, elbow joints and couplings should be sealed with removable sg component. The number of junctions should be kept to a minimum as they are a possible source of leakage.
- Do not use PTFE tape on the suction and return line pipes to avoid the possibility that particles enter circulation. These could deposit on the pump filter or the nozzle, reducing efficiency. Always use O-Rings or mechanical seal (copper or aluminium gaskets) junctions if possible.
- An external filter should always be installed in the suction line upstream of the fuel unit.

Oil circuit

The fuel is pushed into the pump 1 to the nozzle 3 at the delivery pressure set by the pressure governor. The solenoid valve 2 stops the fuel immission into the combustion chamber. The fuel flow rate that is not burnt goes back to the tank through the return circuit. The spill-back nozzle is feeded at constant pressure, while the return line pressure is adjusted by means of the pressure governor controlled by an actuator coupled to an adjusting cam. The fuel amount to be burnt is adjusted by means of the burner actuator according to the adjustments set (see prevoius paragraph).

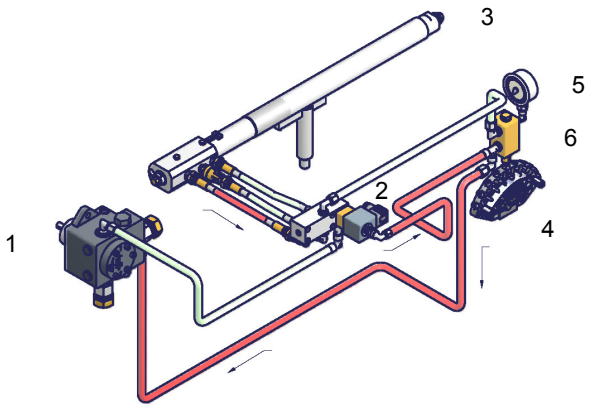

Fig. 9 - Stand-by

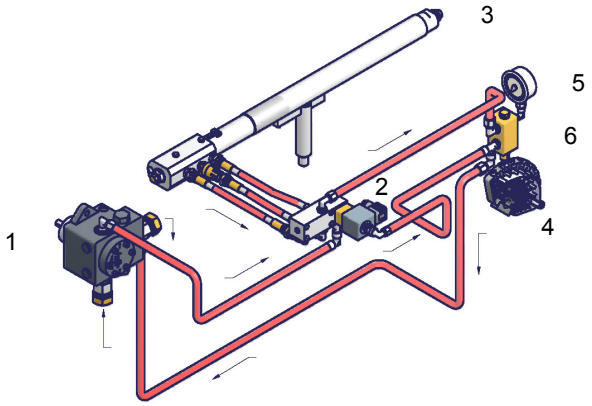

Fig. 10 - Prepurge

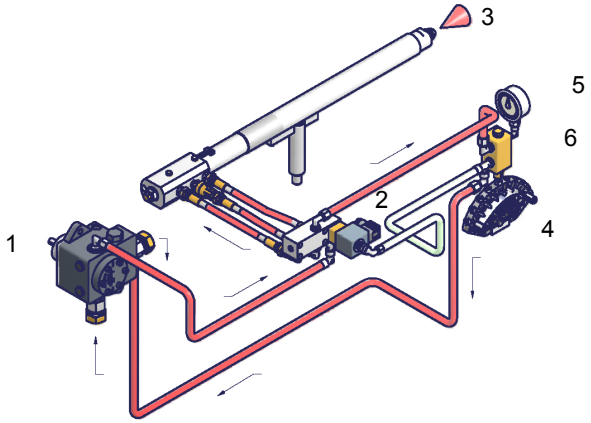

Fig. 11 - Low flame

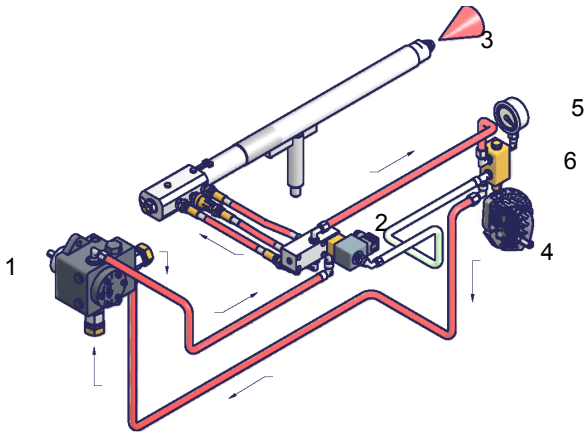

Fig. 12 - High flame

Key

1 Oil pump
2 Oil solenoid valve
3 Nozzle
4 Adjusting cam
5 Pressure gauge
6 Pressure governor

Electrical connections

⚠	**RESPECT THE BASIC SAFETY RULES. MAKE SURE OF THE CONNECTION TO THE EARTHING SYSTEM. DO NOT REVERSE THE PHASE AND NEUTRAL CONNECTIONS. FIT A DIFFERENTIAL THERMAL MAGNET SWITCH ADEQUATE FOR CONNECTION TO THE MAINS. STRICTLY OBSERVE THE DATA PLATE.**

- Remove the cover from the burner electrical panel.
- Execute the electrical connections to the power supply terminal board, check the direction of the motor (see next paragraph) and replace the cover of the electrical panel.

⚠	**WARNING: The burner is provided with a jumper between terminals 6 and 7; in the event of connecting the high/low flame thermostat remove this jumper before connecting the thermostat.**
	IMPORTANT: while connecting electric supply wires to burner's teminal block be sure that ground wire should be longer than phase and neutral ones.

As far as electrical connections, see the attached wirign diagrams.

Motor rotation

Once the burner electrical connection is accomplished, remember to check the rotation of the fan motor.

The motors must rotate in the direction showed on their casing. In the event of wrong rotation, reverse the three-phase supply and check again the motor rotation.

NOTE: Burners are provided for three-phase 400 V supply, and in the case of three-phase 230 V supply it is necessary to modify the electrical connections inside the terminal box of the electric motor and replace the thermal cutout relay.

ADJUSTING LIGHT OIL FOLW RATE

Light oil nozzles

The light oil flow rate can be adjusted choosing a by-pass nozzle that suits the boiler/utilisation's output and setting the delivery and return pressure values according to the values quoted on diagrams on figure and , according to the burner type. Nozzles provided are the following according to the burner type:

TG90 - TG91 - TG92: Bergonzo A3

TG93-510-515-520-525: Fluidics WR2/ UNIGAS M3 45°

As far as reading the pressure values, see next paragraphs.

FLUIDICS NOZZLE: REFERENCE DIAGRAM (INDICATIVE ONLY)

DIMENSIONS	FLOW RATE kg/h		Indicative pessure on return (bar)
	Min	Max	
40	13	40	19
50	16	50	22
60	20	60	20
70	23	70	23
80	26	80	23
90	30	90	22
100	33	100	22
115	38	115	21
130	43	130	22
145	48	145	21
160	53	160	21
180	59	180	22
200	66	200	21
225	74	225	22
250	82	250	22
275	91	275	22
300	99	300	23
330	109	330	23
360	119	360	22
400	132	400	22
450	148	450	22
500	165	500	22
550	181	550	22
600	198	600	23
650	214	650	23
700	231	700	23
750	250	750	23
800	267	800	22

Tab. 1

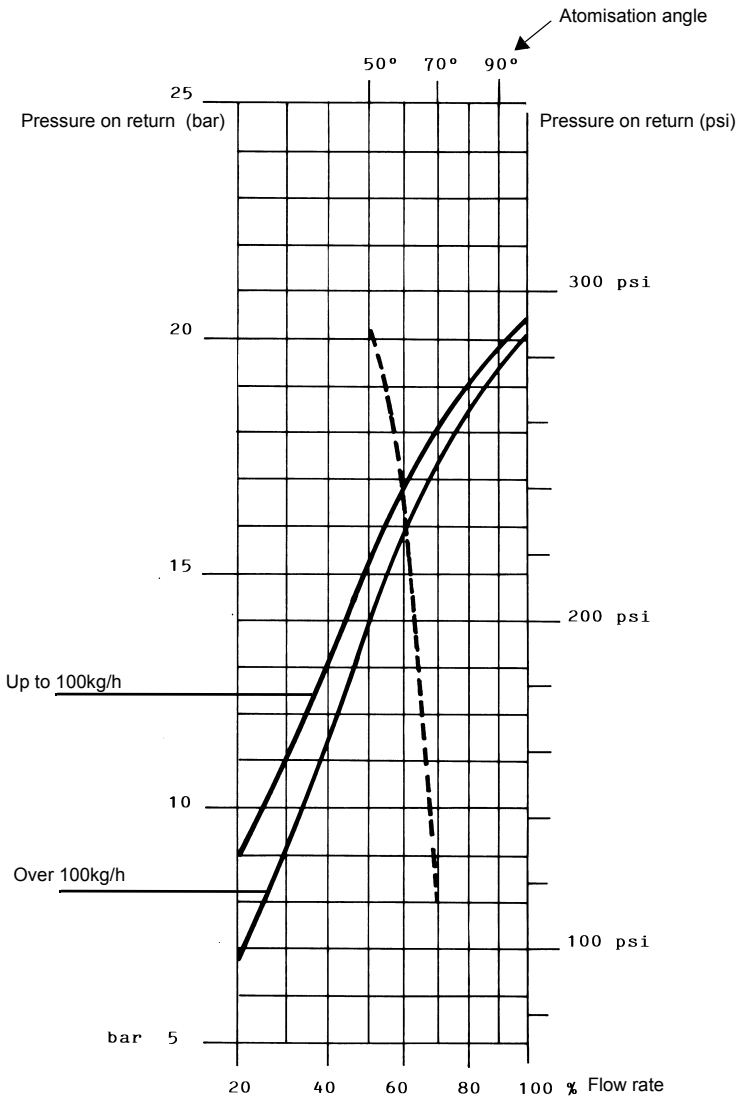

NOZZLE SUPPLY PRESSURE = 25 bar

- - - - - Atomisation angle according to the return pressure

——— % Flow rate

viscosity at nozzle = 5 cSt

ATTENTION! To achieve the maximum flow rate close completely the return line.

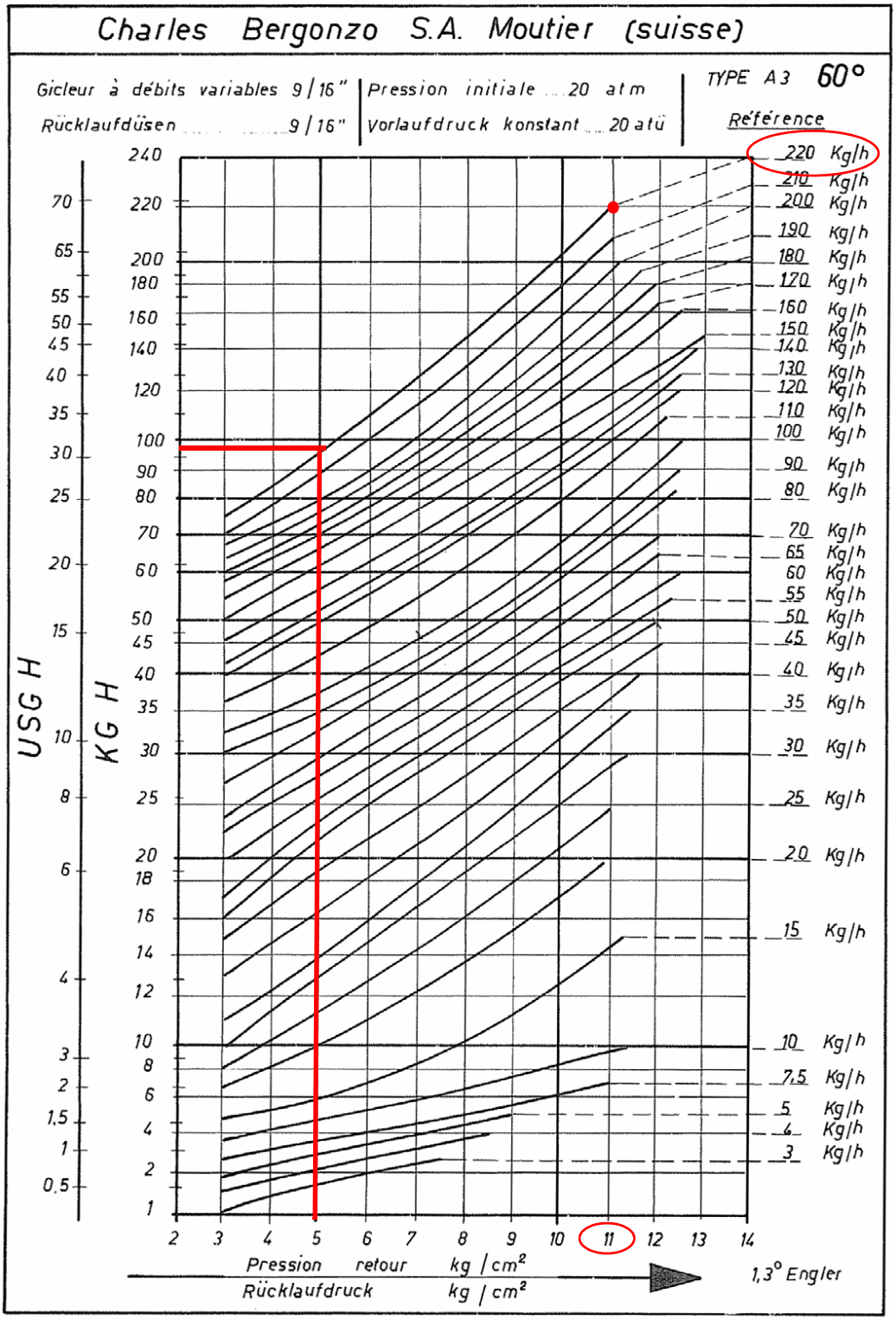

NOZZLE SUPPLY PRESSURE = 20 bar

Example (Bergonzo): if a 220kg/h flow rate BERGONZO nozzle is provided, set the return pressure at 11bar, supply at 20bar on the delivery to get a 220kg/h flow rate. If the return pressure needed is 5bar, instead, act on the **V** adjusting screw on the pressure governor. The flow rate will then be about 95kg/h (see the example showed on the Bergonzo diagram).

NOZZLE SUPPLY PRESSURE = 20 bar. VISCOSITY AT NOZZLE = 5 cSt

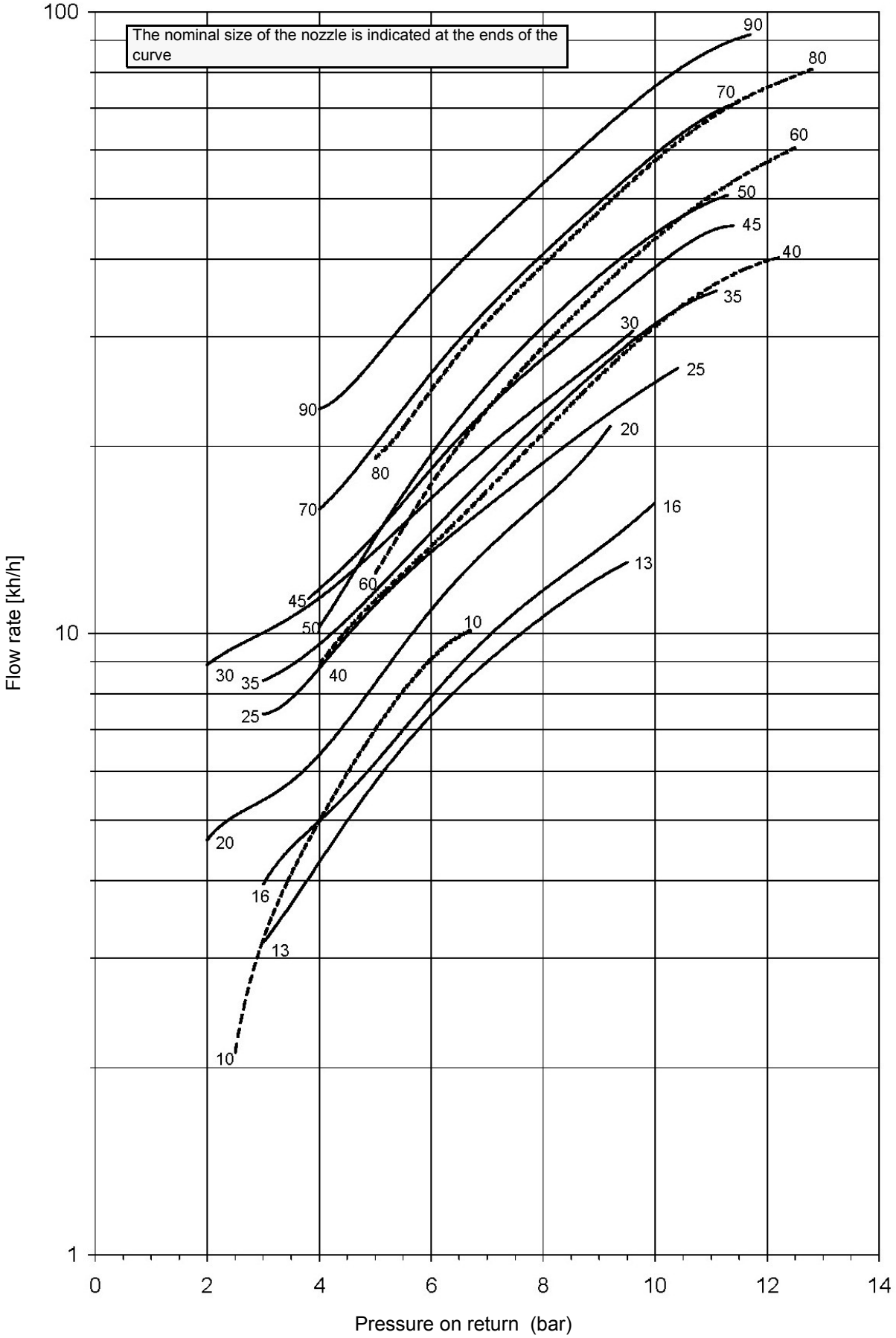

NOZZLE SUPPLY PRESSURE = 20 bar. VISCOSITY AT NOZZLE = 5 cSt

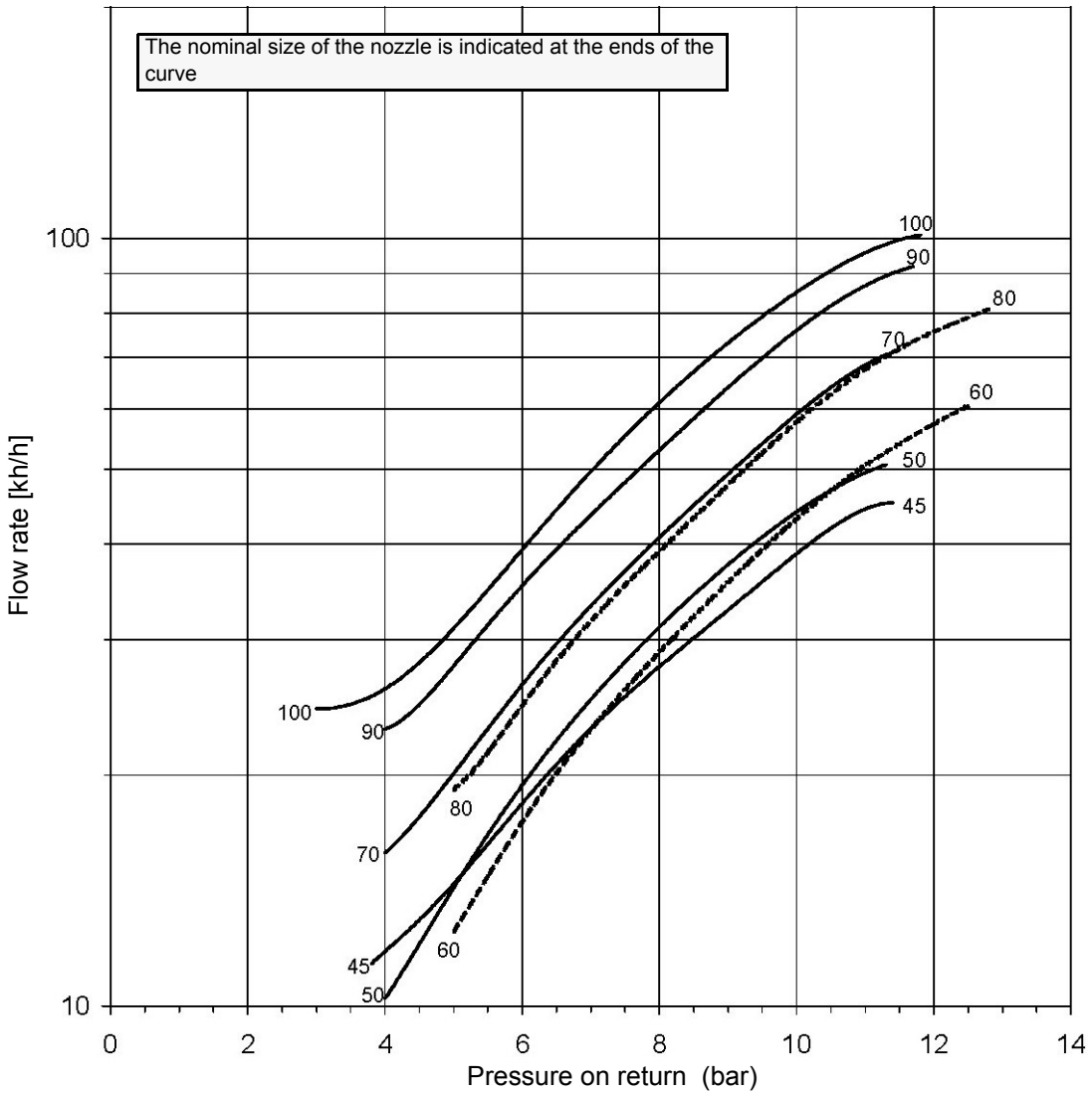

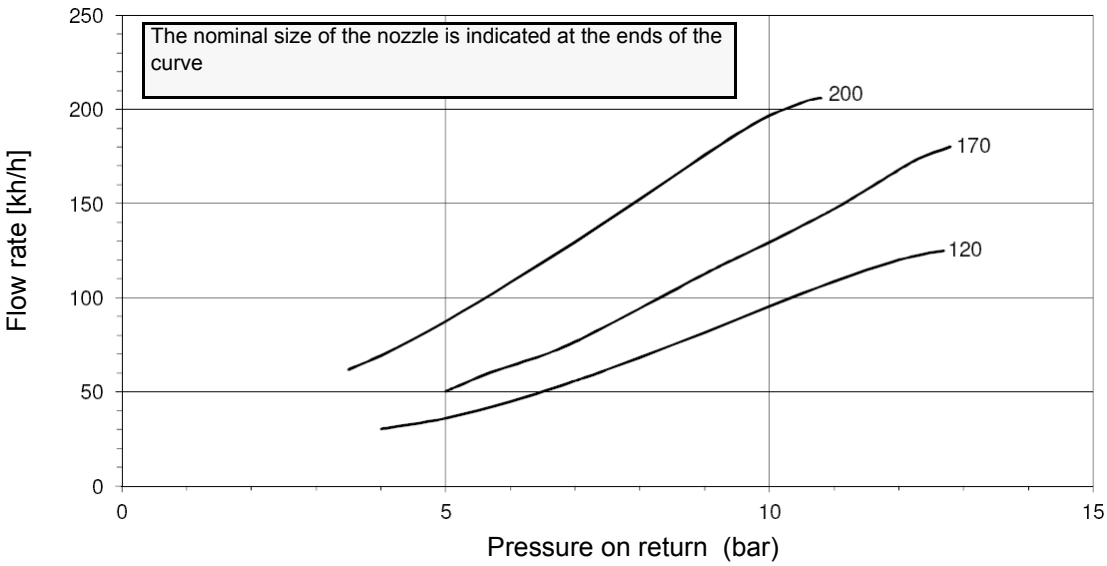

NOZZLE SUPPLY PRESSURE = 20 bar. VISCOSITY AT NOZZLE = 5 cSt

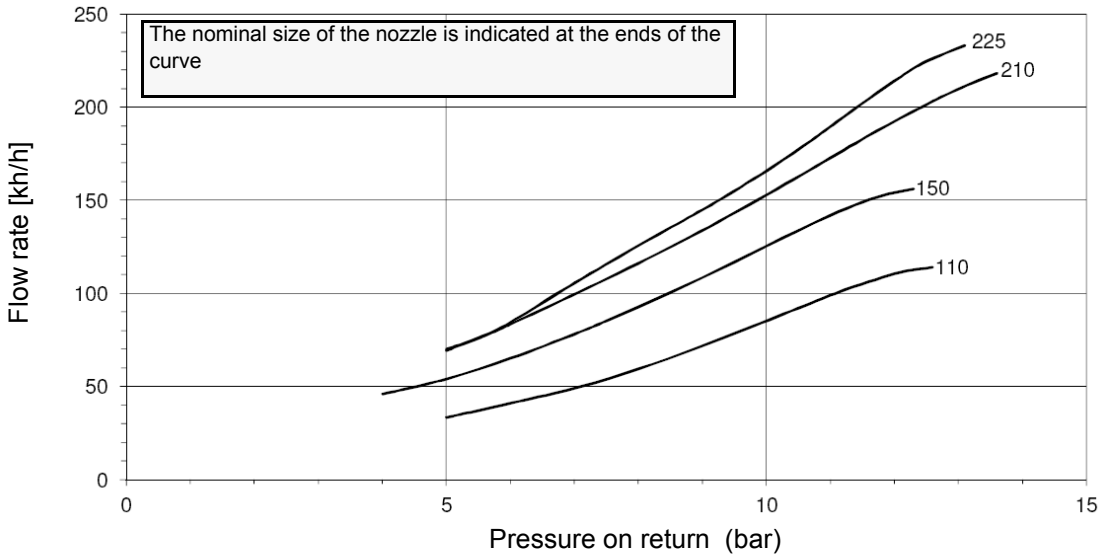

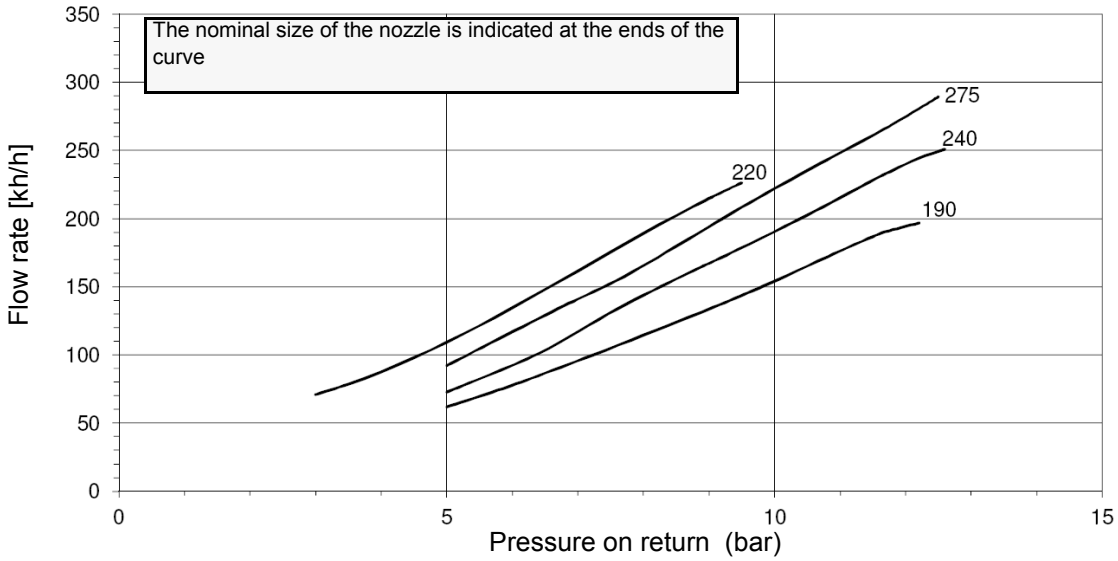

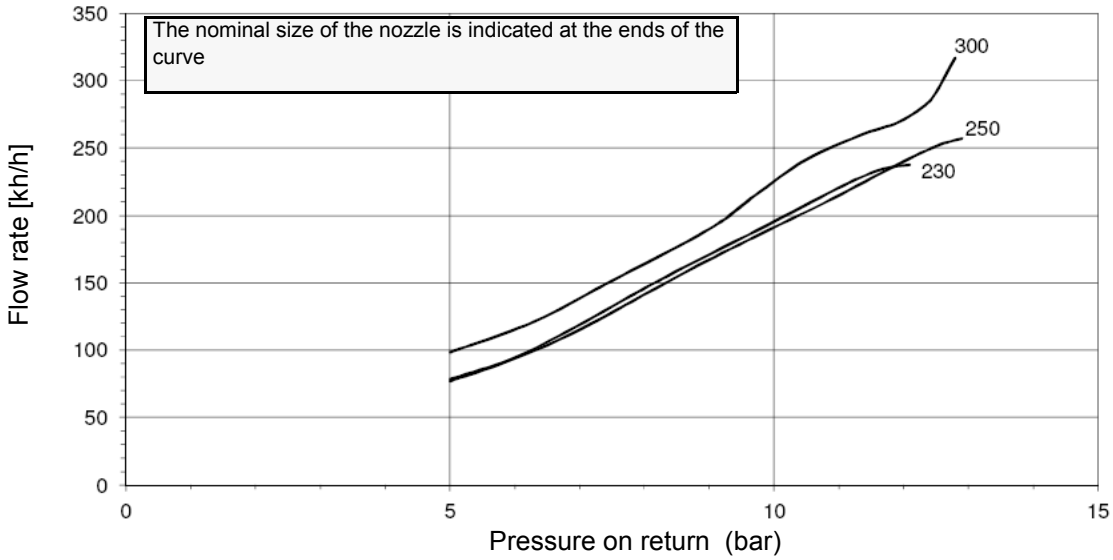

Adjustments - brief description

⚠	***ATTENTION:*** **before starting the burner up, be sure that the manual cutoff valves are open and check that the pressure upstream the gas train complies the value quoted on paragraph "Technical specifications". Be sure that the mains switch is closed.**
	Before starting up the burner, make sure that the return pipe to the tank is not obstructed. Any obstruction would cause the pump seal to break.
	.***ATTENTION:*** During commissioning operations, do not let the burner operate with insufficient air flow (danger of formation of carbon monoxide); if this should happen, make the fuel decrease slowly until the normal combustion values are achieved.

⚠	**IMPORTANT! the combustion air excess must be adjusted according to the in the following chart:**

Recommended combustion parameters		
Fuel	Recommended (%) CO_2	Recommended (%) O_2
Light oil	11.5 ÷ 13	2.9 ÷ 4.9

Adjust the air and fuel flow rates at the maximum output ("high flame") first, by means of the air damper and the adjusting cam respectively.

- Check that the combustion parameters are in the suggested limits.
- Check the flow rate measuring it on the counter.
- Then, adjust the combustion values corresponding to the points between maximum and minimum: set the shape of the adjusting cam foil. The adjusting cam sets the air/fuel ratio in those points, regulating the opening-closing of the fuel governor.
- Set, now, the low flame output, acting on the low flame microswitch of the actuator in order to avoid the low flame output increasing too much or that the flues temperature gets too low to cause condensation in the chimney.

Adjustment procedure

To change the burner setting during the testing in the plant, follow the next procedure, according to the actuator model provided (mod. Berger STM30.. or mod. Siemens SQL..).

Oil Flow Rate Settings by means of Siemens SQM40../Berger STM30.. actuator

1 Check the fan motor rotation.

2 With the electrical panel open, prime the oil pump acting on the related **CP** contactor (see next picture): check the pump motor rotation and keep pressed for some seconds until the oil circuit is charged;

3 bleed the air from the **M** pressure gauge port (Fig. 13) by loosing the cap without removing it, then release the contactor.

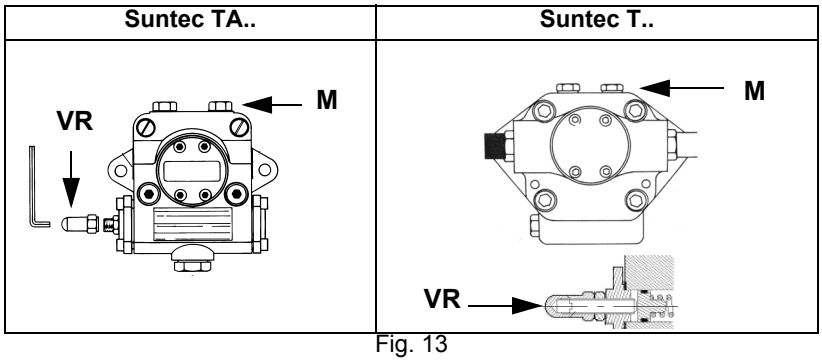

Fig. 13

4 Before starting the burner up, drive the high flame actuator microswitch matching the low flame one (in order to let the burner operates at the lowest output) to achieve safely the high flame stage .

5 Turn the burner on by means of its main switch: if the burner locks (LED on in the control panel) press the RESET button on the

control panel - see chapter “OPERATION” on page 28.

6 be sure that the actuator cam for the “Startup enabling signal” (when used) is about 5° more than the ignition cam;

7 start the burner up by means of the thermostat series and wait until the pre-purge time comes to an end;

8 drive the burner to high flame stage, by means fo the thermostat **TAB**.

9 Then move progressively the microswitch to higher values until it reaches the high flame position; always check the combustion values and eventually adjusting the oil pressure (see next step).

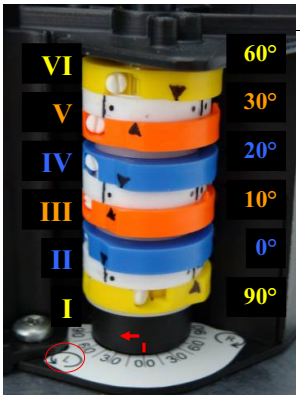

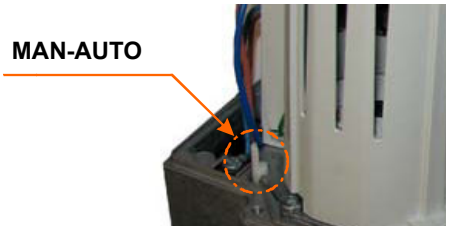

Actuator cams

I	High flame
II	Stand-by and Ignition
III	Low flame

Siemens SQM40

10 the nozzle suplly pressureis already factory-set and must not be changed. Only if necessary, adjust the supply pressure as follows (see related paragraph);insert a pressure gauge into the port showed on Fig. 14 and act on on the pump adjusting screw **VR** (see Fig. 13) as to get the nozzle pressure at 20bar or 25bar (according to the nozzle model: Bergonzo or Fluidics nozzle - see page 24).

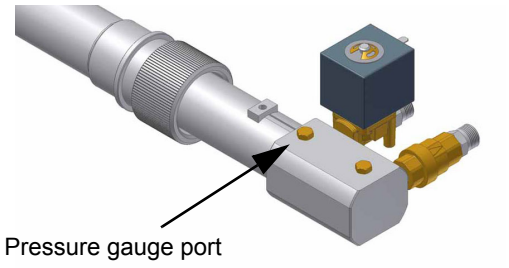

Fig. 14

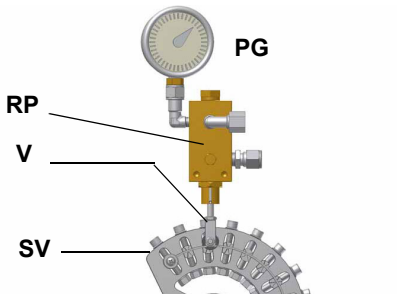

Fig. 15

11 in order to get the maximum oil flow rate, adjust the pressure (reading its value on the **PG** pressure gauge) without changing the air flow rate set during the gas operation adjustments (see prevoius paragraph): checking always the combustion parameters, the adjustment is to be performed by means of the **SV** adjusting cam screw (see picture) when the cam has reached the high flame position.

12 To adjust the **air flow rate in the high flame stage**, loose the **RA** nut and screw **VRA** as to get the desired air flow rate: moving the rod **TR** towards the air damper shaft, the air damper opens and consequently the air flow rate increases, moving it far from the shaft the air damper closes and the air flow rate decreases.

Note: once the procedure is perfomed, be sure that the blocking nut **RA** is fasten. Do not change the position of the air damper rods.

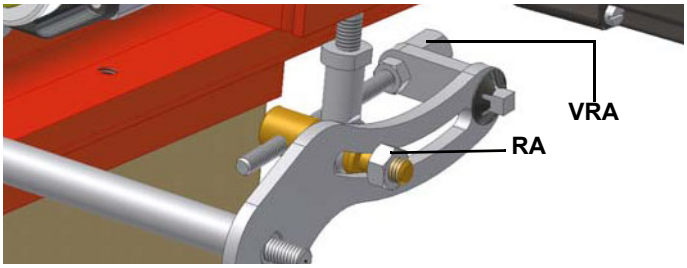

13 Only if necessary, change the combusiton head position: to let the burner operate at a lower output, loose the **VB** screw and move progressively back the combustion head towards the MIN position, by turning clockwise the **VRT** ring nut. Fasten **VB** screw when the adjustment is accomplished.

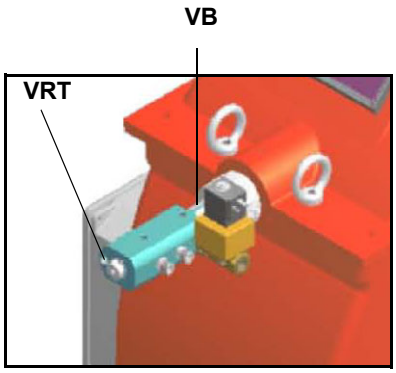

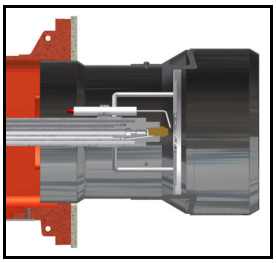

”MIN” position

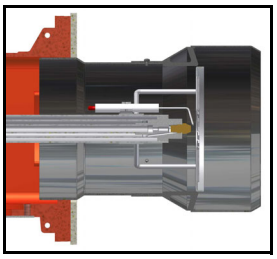

”MAX” position)

Attention! if it is necessary to change the head position, repeat the air and gas adjustments described above.

14 the air and oil rate are now adjusted at the maximum power stage, go on with the point to point adjustement on the **SV** adjusting cam as to reach the minimum output point.

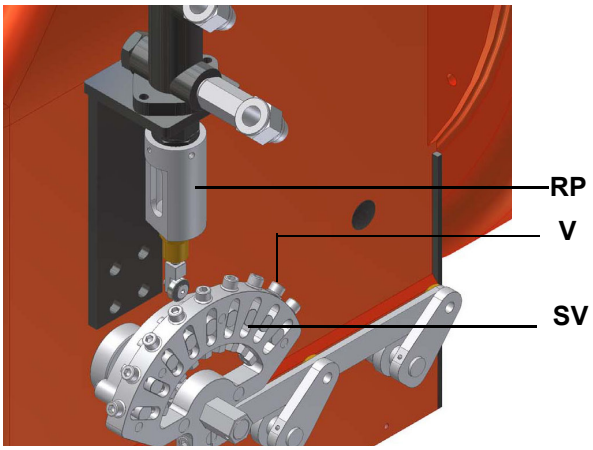

15 as for the point-to-point regulation in order to set the cam foil shape, move the low flame microswitch (cam III) a little lower than the maximum position (90°);

16 set the **TAB** thermostat to the minimum in order that the actuator moves progressively towards the low flame position;

17 move cam III (low flame) towards the minimum to move the actuator towards the low flame until the two bearings find the adjusting screw that refers to a lower position: screw **V** to increase the rate, unscrew to decrease, in order to get the pressure as shown on diagram, according to the requested rate.

18 Move again cam III towards the minimum to meet the next screw on the adjusting cam and repeat the previous step; go on this way as to reach the desired low flame point.

19 The low flame position must never match the ignition position that is why cam **III** must be set 20°- 30° more than the ignition position.

Turn the burner off; then start it up again. If the adjustment is not correct, repeat the previous steps.

Fully modulating burners

To adjust the fully-modulating burners, use the **CMF** switch on the burner control panel (see next picture), instead of the **TAB** thermostat as described on the previous paragraphs about the progressive burners. Go on adjusting the burner as described before, paying attention to use the CMF switch intead of **TAB**.

The **CMF** position sets the oprating stages: to drive the burner to the high-flame stage, set CMF=1; to drive it to the low-flame stage, set CMF=2.

To move the adjusting cam set CMF=1 or CMF=2 and then CMF=0.

CMF = 0 stop
CMF = 1 high flame operation
CMF = 2 high flame operation flame operation
CMF = 3 automatic operation

Maximum oil pressure switch

The oil pressure switch on the return line, checks that the pressure does not exceed a default value. This value must not be higher than the maximum acceptable pressure on the return line (this value is reported on the specification table). A pressure change on the return line could affect the combustion parameters: for this reason, the pressure switch must be set, say, at 20% over the pressure recorded during the combustion adjustment. The factory setting is 4 bar.

It is recommended to verify that the combustion parameters are within the range of acceptable values even against a pressure variation that gets close to the limit of the pressure switch.

This check should be carried out along the whole range of the burner output.

In case of inacceptable values, reduce from 20% to 15% the overpressure; later on, repeat the adjustments described above.

Minimum oil pressure switch (when provided)

The minimum oil pressure switch on the inlet line, checks that the pressure does not drop below a default value. The pressure switch must be set, say, at 10% under the pressure at the nozzle.

Oil pressure switch adjustment

Follow the below instruction, according to the pressure switch installed.

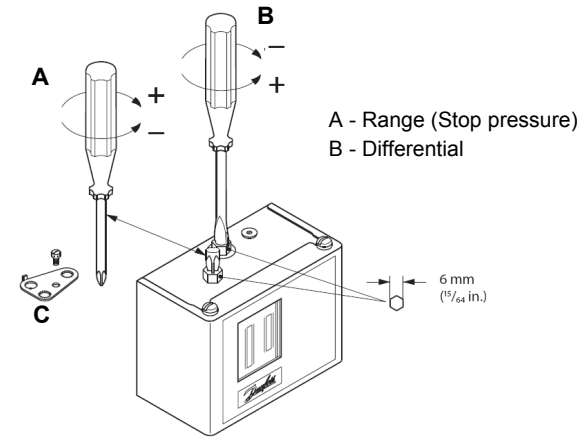

NB: Remove lockplate (C) before adjustment

Danfoss KP..

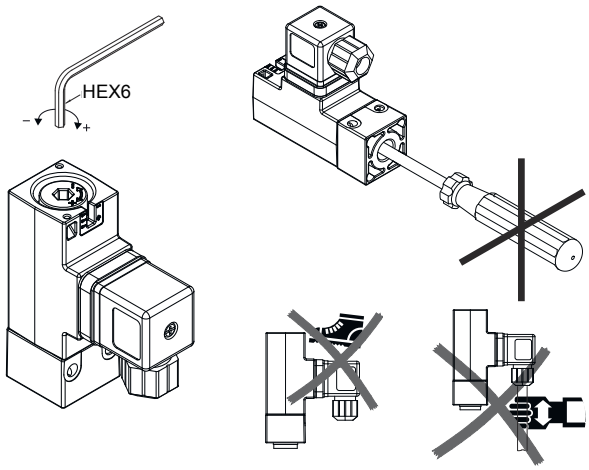

Trafag Picostat 9B4..

Calibration of air pressure switch

To calibrate the air pressure switch, proceed as follows:

- Remove the transparent plastic cap.
- Once air and gas setting have been accomplished, startup the burner.
- During the pre-purge phase o the operation, turn slowly the adjusting ring nut **VR** in the clockwise direction until the burner lockout, then read the value on the pressure switch scale and set it to a value reduced by 15%.
- Repeat the ignition cycle of the burner and check it runs properly.
- Refit the transparent plastic cover on the pressure switch.

PART II: OPERATION

LIMITATIONS OF USE

THE BURNER IS AN APPLIANCE DESIGNED AND CONSTRUCTED TO OPERATE ONLY AFTER BEING CORRECTLY CONNECTED TO A HEAT GENERATOR (E.G. BOILER, HOT AIR GENERATOR, FURNACE, ETC.), ANY OTHER USE IS TO BE CONSIDERED IMPROPER AND THEREFORE DANGEROUS.

THE USER MUST GUARANTEE THE CORRECT FITTING OF THE APPLIANCE, ENTRUSTING THE INSTALLATION OF IT TO QUALIFIED PERSONNEL AND HAVING THE FIRST COMMISSIONING OF IT CARRIED OUT BY A SERVICE CENTRE AUTHORISED BY THE COMPANY MANUFACTURING THE BURNER.

A FUNDAMENTAL FACTOR IN THIS RESPECT IS THE ELECTRICAL CONNECTION TO THE GENERATOR'S CONTROL AND SAFETY UNITS (CONTROL THERMOSTAT, SAFETY, ETC.) WHICH GUARANTEES CORRECT AND SAFE FUNCTIONING OF THE BURNER.

THEREFORE, ANY OPERATION OF THE APPLIANCE MUST BE PREVENTED WHICH DEPARTS FROM THE INSTALLATION OPERATIONS OR WHICH HAPPENS AFTER TOTAL OR PARTIAL TAMPERING WITH THESE (E.G. DISCONNECTION, EVEN PARTIAL, OF THE ELECTRICAL LEADS, OPENING THE GENERATOR DOOR, DISMANTLING OF PART OF THE BURNER).

NEVER OPEN OR DISMANTLE ANY COMPONENT OF THE MACHINE.

OPERATE ONLY THE MAIN SWITCH, WHICH THROUGH ITS EASY ACCESSIBILITY AND RAPIDITY OF OPERATION ALSO FUNCTIONS AS AN EMERGENCY SWITCH, AND ON THE RESET BUTTON.

IN THE EVENT OF REPEATED LOCKOUTS, DO NOT PERSIST WITH THE RESET BUTTON AND CONTACT QUALIFIED PERSONNEL WHO WILL PROCEED TO ELIMINATE THE MALFUNCTION.

WARNING: DURING NORMAL OPERATION THE PARTS OF THE BURNER NEAREST TO THE GENERATOR (COUPLING FLANGE) CAN BECOME VERY HOT, AVOID TOUCHING THEM SO AS NOT TO GET BURNT.

OPERATION

⚠	***ATTENTION:*** **before starting the burner up, be sure that the manual cutoff valves are open . Be usre that the mains switch is closed.**

1 Set to the ON position the switch on the control panel of the burner.
2 Check the control box is not in the lockout position; in such a case reset it by the reset pushbutton.
3 Check the series of thermostats (or pressure switches) sends the burner the signal to operate.
4 The startup sequence begins: the control box ignites the fan/pump motor and energises the ignition transformer as well.
5 At the end of the pre-purge stage, the light oil solenoid valve EVG is energised and the burner is on.
6 The ignition transformer is energized for few seconds after the ignition of the flame (post-ignition time) and at the end of this time is de-energised.
7 After the ignition the actuator moves to the high flame position for some seconds, then the operation begins and the burner switches to high flame or to low flame, according to the plant demand.

PART III: MAINTENANCE

At least once a year carry out the maintenance operations listed below. In the case of seasonal servicing, it is recommended to carry out the maintenance at the end of each heating season; in the case of continuous operation the maintenance is carried out every 6 months.

WARNING: ALL OPERATIONS ON THE BURNER MUST BE CARRIED OUT WITH THE MAINS DISCONNECTED AND THE FUEL MANAUL CUTOFF VALVES CLOSED!

ATTENTION: READ CAREFULLY THE "WARNINGS" CHAPTER AT THE BEGINNIG OF THIS MANUAL.

ROUTINE MAINTENANCE

- Check and clean the cartdrige of the fuel filter, replace it if necessary (see next paragraph);
- carefully check for leaks, the fuel flexible hoses;
- check and clean the filter on the fuel pump: bilter must be thoroughly cleaned at least once in a season to ensure correct working of the fuel unit. To remove the filter, unscrew the four screws on the cover. When reassemble, make sure that the filter is mounted with the feet toward the pump body. If the gasket between cover and pump housing should be damaged, it must be replaced;
- remove, check and clean the combustion head (page 30); when reassembling, carefully observe the measures on page 31;
- check the ignition electrodes and their ceramic insulators, clean, adjust and replace if necessary (page 31);
- remove and clean the oil nozzles (IMPORTANT: do not clean the nozzles using metallic or sharp utensils, use only solvents or steam); at the end of maintenance operations, refit the burner, turn it on and check the combustion. If in doubt, replace the defective nozzle/s. In case of intensive use of the burner, the nozzles must be replaced at the end of the working season;
- check and carefully clean the flame detection photoresistor (page 31), if necessary replace it and, if in doubt, check the detection current;
- clean and grease leverages and rotating parts.

Light oil filter maintenance

For correct and proper servicing, proceed as follows:

1 shut off fuel in the line section being serviced;
2 unscrew the tray;
3 remove the filter cartridge from its support and wash it with petrol or replace if necessary; check seal O-Ring, replace if necessary;
4 reassemble the tray and restore fuel flow.

Removing the combustion head

1 Remove the top cover **C**;
2 remove the photoresistor from its seat;
3 unscrew the revolving connectors (**E** in figure) on the fuel pipes (use 2 spanners to avoid loosening the connections attached to the distributor block);
4 loosen **VRT** screw to free the threaded rod **AR**, then screw out the 2 screws **V** holding the washer **R** and the screw **VRT** again;
5 remove the whole assembly as shown in figure;
6 clean the combustion head by means of a vacuum cleaner; to scrape off the scale use a metallic brush.

Note: to replace the combustion head reverse the procedure described above.

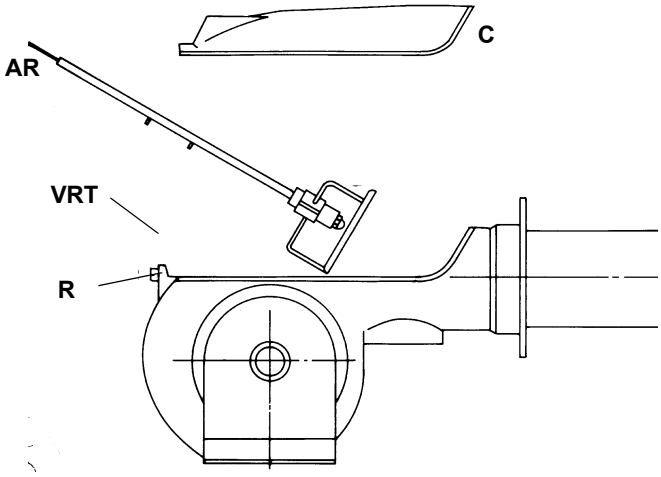

Removing the oil gun

Once the combustion head is removed, as described before, remove the oil gun as foloows:

1 unscrew the connectors from the 2 oil pipes (**E** in figure) using 2 spanners to avoid loosening the connections attached to the distributor block);
2 loosen the screw **VB**
3 remove the gun with the light oil nozzle holder.
4 clean the oil gun by means of a vacuum cleaner; to scrape off the scale use a metallic brush
5 replace the oil gun, if necessary.

Note: To re-assemble, follow the procedure above in reversed order.

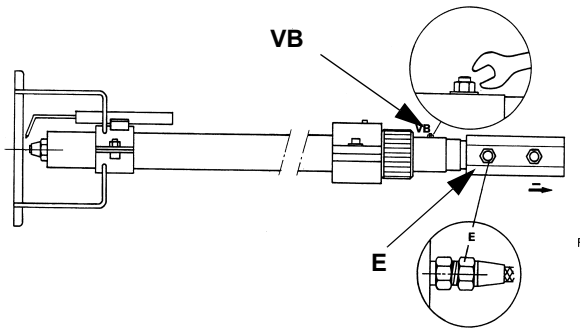

Correct position of electrodes and nozzle

⚠	**ATTENTION:** avoid the ignition electrodes to get in touch with metallic parts (blast tube, head, etc.), otherwise the boiler's operation would be compromised. Check the electrodes position after any intervention on the combustion head.

To guarantee a good ignition the measures shown on the next picture Fig. 16 must be observed.
Be sure to tighten the screw on the electrodes group before reassembling the combustion head.

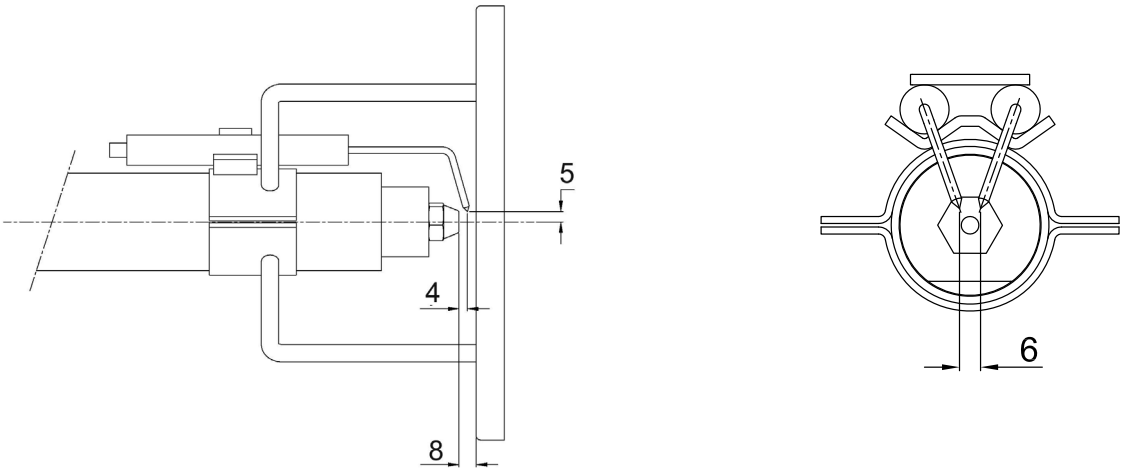

Fig. 16

Replacing the ignition electrodes

⚠	**ATTENTION:** avoid the ignition electrodes to get in touch with metallic parts (blast tube, head, etc.), otherwise the boiler's operation would be compromised. Check the electrodes position after any intervention on the combustion head.

To replace the ignition electrodes, proceed as follows:

1 remove the burner cover;
2 disconnect the electrodes cables;
3 remove the combustion head (see par. "Removing the combustion head");
4 loose screw (B) that fasten the ignition electrodes;
5 remove the electrodes and replace them, referring to the values quoted on Fig. 16.

Cleaning and replacing the detection photoresistor

When cleaning the photoresistive detector, always use a clean cloth. If necessary, remove it from its slot to replace it.

Checking the detection current

To measure the detection signal follow the diagram in Fig. 26. If the signal is not in the advised range, check the electrical contacts, the cleaning of the combustion head, the position of the photoresistor and if necessary replace it.

series 9x: LMO
series **5xx**: LAL25

Minimum current intensity with flame
LMO: 45µA
LAL25: 8µA

Maximum current intensity without flame:
LMO: 5.5µA
LAL25: 0.8µA

Maximum possible current intensit with flame:
LMO: 100µA
LAL25: 30µA

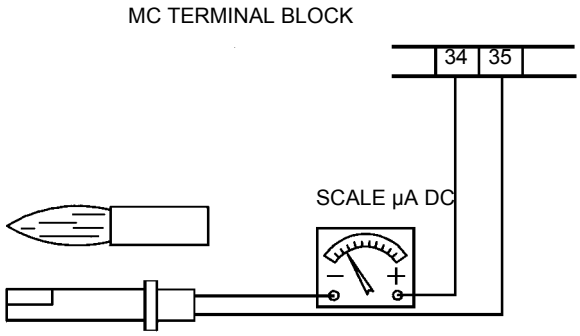

Fig. 17

Seasonal stop

To stop the burner in the seasonal stop, proceed as follows:

1 turn the burner's main switch to 0 (Off position)
2 disconnect the power mains
3 close the fuel cock of the supply line

Burner disposal

In case of disposal, follow the instructions according to the laws in force in your country about the "Disposal of materials".

	THE BURNER DOESN'T START	THE BURNER REPEATS PRE-PURGE	NOISY FUEL PUMP	THE BURNER DOESN'T START AND STOPS	THE BURNER STARTS AND STOPS	THE BURNER DOESN'T SWITCH TO HIGH FLAME	THE BURNER STOPS DURING OPERATION	THE BURNER STOPS AND REPEATS THE CYCLE DURING OPE-RATION
MAIN SWITCH OPEN	●							
LINE FUSE INTERVENTION	●							
MAX. PRESSURE SWITCH FAULT	●							●
FAN THERMAL CUTOUT INTERVENTION	●							
AUXILIARY RELAIS FUSES INTERVENTION	●							
CONTROL BOX FAULT	●	●		●	●		●	
SERVOCONTROL FAULT						●		
SMOKEY FLAME					●		●	
IGNITION TRANSFORMER FAULT				●				
IGNITION ELECTRODE DIRTY OR WRONG POSITIONED				●				
DIRTY NOZZLE				●			●	
FUEL SOLENOID VALVE DEFECTIVE				●			●	
PHOTORESISTOR DIRTY OR DEFECTIVE					●		●	
HI-LO FLAME THERMOSTAT DEFECTIVE						●		
WRONG POSITION OF SERVOCONTROL CAMS						●		
FUEL PRESSURE TOO LOW				●				
DIRTY FUEL FILTERS			●	●			●	

SIEMENS LAL.. CONTROL BOX

Use

- Control and supervision of oil atomization burners
- For burners of medium to high capacity
- For intermittent operation (at least one controlled shutdown every 24 hours)
- Universally applicable for multistage or modulating burners

Housing and plug-in base

- Made of impact-proof and heat-resistance black plastic
- Lockout reset button with viewing window; located behind it:
- Lockout warning lamp
- Lockout indicator coupled to the spindle of the sequence switch and visible in the transparent lockout reset button
- uses easy-to-remember symbols to indicate the type of fault and the point in time lockout occurred

Base and plug-in section of the LAL... are designed such that only burner controls of the LAL... family can be plugged in.

- 24 connection terminals
- Auxiliary terminals «31» and «32»
- 3 earth terminals terminating in a lug for earthing the burner
- 3 neutral conductor terminals prewired to terminal 2
- 14 knockout holes for cable entry by means of cable glands
- 8 at the side
- 6 in the bottom of the base
- 6 lateral threaded knockout holes for cable entry glands Pg11 or M20

Operation

Flame detector and flame simulation test are made automatically during burner off times and the prepurge time «t1». If loss of flame occurs during operation, the burner control will initiate lockout. If automatic repetition of the startup sequence is required, the clearly marked wire link on the plug-in section of the LAL... must be cut away.

Pre-conditions for burner startup

- Burner control is not in the lockout position
- Sequence switch is in its start position (with LAL2 voltage is present at terminals 11 and 12.
- Air damper is closed; end switch «z» for the CLOSED position must feed power from terminal 11 to terminal8.
- Contact of the limit thermostat or pressure switch «W» and the contacts of any other switching devices in the control loop between terminals 4 and 5 must be closed e.g. a control contact for the oil preheater's temperature
- Normally closed contact of the air pressure switch must be closed.

Startup sequence

Start command by «R»:

«R» closes the start control loop between terminals 4 and 5

- The sequence switch starts to run
- Only prepurging, fan motor at terminal 6 receives power
- Pre- and postpurging, fan motor or flue gas fan at terminal 7 receives power on completion of «t7»
- On completion of «t16», the control command for opening the air damper is delivered via terminal 9
- Terminal 8 receives no power during the positioning time
- The sequence switch continues to run only after the air damper has fully closed.

t1 Prepurge time with air damper fully open:

- The correct functioning of the flame supervision circuit is checked during «t1»
- The burner control will initiate lockout if correct functioning is not ensured.

With LAL2:

Shortly after the beginning of «t1», the air pressure switch must change over from terminal 13 to terminal 14 otherwise, the burner control will initiate lockout start of the air pressure check.

t3 Short preignition time:

«Z» must be connected to terminal 16, release of fuel via terminal 18.

t3' Long preignition time: «Z» connected to terminal 15.

t3n Postignition time:

- «Z» must be connected to terminal 15

- With short preignition, «Z» remains on until «TSA» has elapsed connection to terminal 16.

t4 Interval «BV1 – BV2» or «BV1 - LR»: On completion of «t4», voltage is present at terminal 19. The voltage is required to power «BV2» connected to auxiliary switch «v» in the actuator.

t5 Interval: On completion of «t5», terminal 20 receives power. At the same time, control outputs 9 to 11 and input 8 are galvanically separated from the LAL...'s control section.

LAL... is now protected against reverse voltages from the load control

circuit. With the release of «LR» at terminal 20, the startup sequence of the LAL... ends. After a few idle steps (steps with no contact position changes), the sequence switch switches itself off.

B Operating position of the burner

B-C Burner operation: during burner operation, «LR» drives the air damper to the nominal load or low-fire position, depending on heat demand; the release of the nominal load takes place via auxiliary switch «v» in the actuator and in the event of loss of flame during operation, the LAL... will initiate lockout. For automatic start repetition, the clearly marked wire link «B» on the plugin section of the LAL... must be cut away.

C Controlled shutdown: in the case of controlled shutdown, «BV...» will immediately be closed. At the same time, the sequence switch is started to program «t6»

C-D Sequence switch travels to start position «A»

t6 Postpurge time: fan «M2» connected to terminal 7. Shortly after the start of «t6», terminal 10 receives power and the air damper is driven to the MIN position. Full closing of the air damper starts only shortly before «t6» has elapsed initiated by the control signal at terminal 11. During the following burner off time, terminal 11 is live.

t13 Permissible afterburn time: during «t13», the flame signal input may still receive a flame signal.

D-A End of control program: start position

As soon as the sequence switch has reached the start position – having thereby switched itself off – the flame detector and flame simulation test will start again.

During burner off times, the flame supervision circuit is live.

Lockout and indication of the stop position

Whenever a fault occurs, the sequence switch stops and with it the lockout indicator. The symbol appearing above the reading mark indicates the type of fault:

◀ No start. One of the contacts is not closed (also refer to «Preconditions for burner startup»):

Extraneous light:

Lockout during or after completion of the control program

Examples: nonextinguished flame, leaking fuel valves faulty flame supervision circuit.

▲ Interruption of startup. No OPEN signal at terminal 8 from the changeover end switch «a». Terminals 6, 7 and 15 are live until fault has been corrected

P Lockout**.** No air pressure indication at the beginning of the air pressure check. Air pressure failure after the air pressure check.

■ Defect in the flame supervision circuit.

▼ Interruption of the startup sequence. No positioning signal at terminal 8 from the auxiliary switch «m» for the low-fire position. Terminals 6, 7 and 15 are live until fault has been corrected.

1 Lockout. No flame signal at the end of the safety time.

| Flame signa has been lost during operation.

A Consenso all'avviamento (ad esempio tramite il termostato o il pressostato R dell'impianto

B Operating position of the burner

B-C Burner operation: during burner operation, «LR» drives the air damper to the nominal load or low-fire position, depending on heat demand; the release of the nominal load takes place via auxiliary switch «v» in the actuator and in the event of loss of flame during operation, the LAL... will initiate lockout. For automatic start repetition, the clearly marked wire link «B» on the plugin section of the LAL... must be cut away.

C Controlled shutdown: in the case of controlled shutdown, «BV...» will immediately be closed. At the same time, the sequence switch is started to program «t6»

C-D Sequence switch travels to start position «A».

During burner off times, the flame supervision circuit is live.

Lockout indication

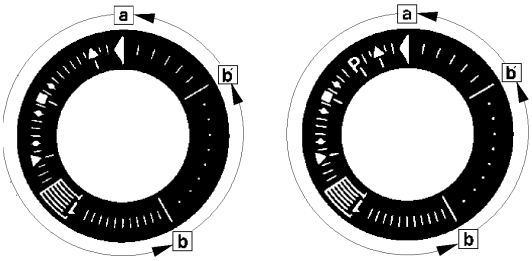

a-b Startup sequence
b-b' Idle step (with no contact confirmation)
b(b')-a Postpurge program

Burner control can immediately be reset after lockout:
Do not press the lockout reset button for more than 10 seconds
The sequence switch always travels to the start position first
After resetting
After rectification of a fault that led to shutdown
After each power failure
During this period of time, power is only fed to terminals 7 and 9...11.
Then, the LAL.... will program a new burner startup sequence

Specifications

Power supply	AC 230 V -15 / +10 %
for LAL2... on request AC 100 V -15 %...AC 110 V +10 %	
Frequency	50 Hz -6 %...60 Hz +6 %
Absorption	AC 3.5 VA
Mounting position	optional
Protection	IP 40
Perm. input current at terminal 1	AC 5 A max., 20 A peak
Perm. current rating of control terminals 3, 6, 7, 9...11, 15...20	4 A max., 20 A peak
Internal fuse	T6,3H250V according to IEC 127
External fuse	max. 10 A
Weight	Device 1000 g Plug-in base 165 g

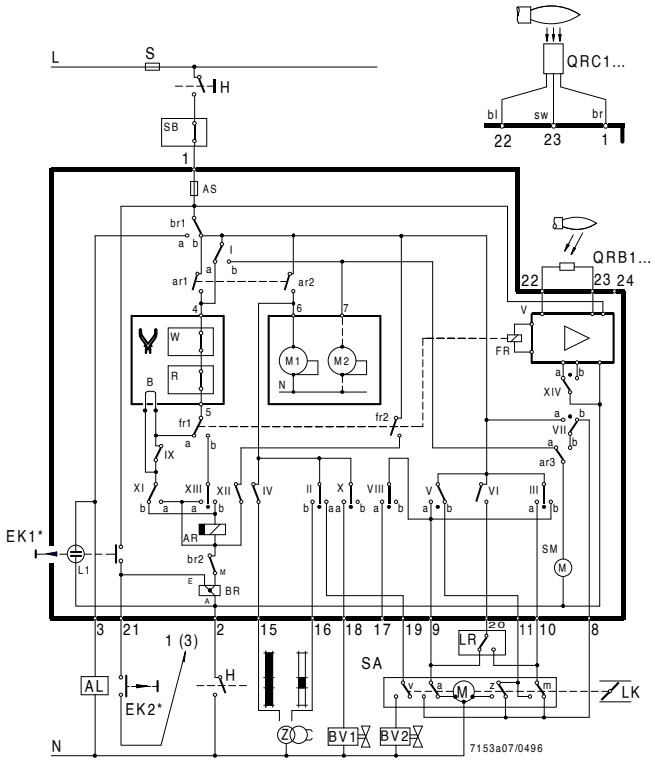

Sequence diagram

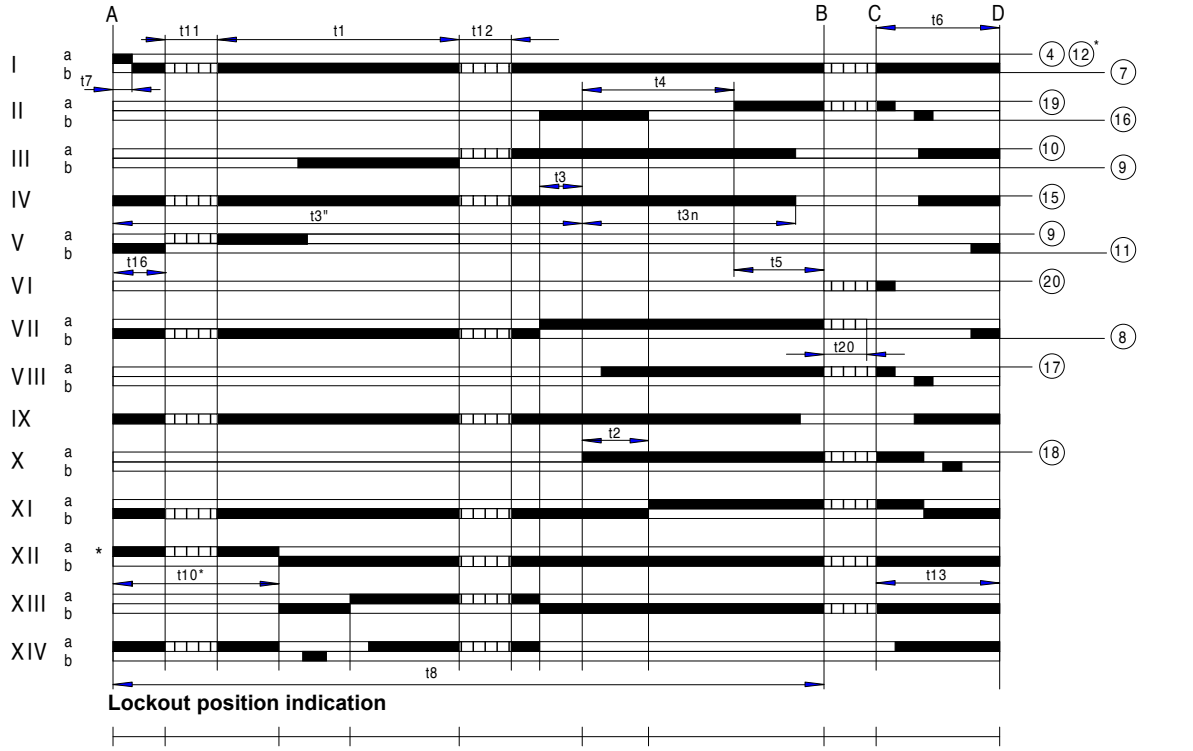

Key

t1 Prepurge time with air damper fully open
t2 Safety time
t3 Preignition time, short («Z» connected to terminal 16)
T3' Preignition time, long («Z» connected to terminal 15)
t3n Postignition time («Z» connected to terminal 15)
t4 Interval between voltage at terminals 18 and 19 («BV1-BV2»)
t5 Interval between voltage at terminals 19 and 20 («BV2» load controller)

t6 Postpurge time (with «M2»)

t7 Interval between start command and voltage at terminal 7 (start delay time for «M2»)

t8 Duration of startup sequence (excluding «t11» and «t12»)

t10 Interval from startup to the beginning of the air pressure check

t11 Air damper running time to the OPEN position

t12 Air damper running time to the low-fire position (MIN)

t13 Permissible afterburn time

t16 Interval to the OPEN command for the air damper

t20 For self-shutdown of the sequence switch

SIEMENS OIL BURNERS AUTOMATIC CONTROLLER SIEMENS LMO14 - LMO24 - LMO44

The LMO... burner controls are designed for the start-up and supervision of single- or 2-stage forced draught oil burners in intermittent operation. Yellow-burning flames are supervised with photoresistive detectors QRB..., blue-burning flames with blue-flame detectors QRC...

In terms of housing dimensions, electrical connections and flame detectors, the LMO... are identical to the LOA... oil burner controls.

Preconditions for startup

- Burner control is reset
- All contacts in the line are closed
- No undervoltage
- Flame detector is darkened, no extraneous light

Undervoltage

- Safety shut-down in the operating position takes place should the mains voltage drop below about AC 165 V
- Restart is initiated when the mains voltage exceeds about AC 175 V

Time supervision oil pre-heater

If the oil pre-heater's release contact does not close within 10 minutes, the burner control will initiate lock-out.

Controlled intermittent operation

After no more than 24 hours of continuous operation, the burner control will initiate an automatic safety shut-down followed by a restart.

Control sequence in the event of fault

If lock-out occurs, the outputs for the fuel valves and the ignition will immediately be deactivated (< 1 second).

Cause	Response
After a mains failure	Restart
After voltage has fallen below the undervoltage threshold	Restart
In the event of a premature, faulty flame signal during «t1»	Lock-out at the end of «t1»
In the event of a premature, faulty flame signal during «tw»	Prevention of start-up, lock-out after no more than 40 seconds
If the burner does not ignite during «TSA»	Lock-out at the end of TSA
In the event the flame is lost during operation	Max. 3 repetitions, followed by lock-out
Oil pre-heater's release contact does not close within 10 min.	Lock-out

Lock-out

In the event of lock-out, the LMO... remains locked (lock-out cannot be changed), and the red signal lamp will light up. This status is also maintained in the case of a mains failure.

Resetting the burner

Whenever lock-out occurs, the burner control can immediately be reset. To do this, keep control the lock-out reset button depressed for about 1 second (< 3 seconds).

Limitation of repetitions

If the flame is lost during operation, a maximum of 3 repetitions can be made. If the flame is lost for the 4th time during operation, the burner will initiate lock-out. The repetition count is restarted each time controlled switching on by «R-W-SB» takes place.

Operation

Lock-out reset button «EK...» is the key operating element for resetting the burner control and for activating / deactivating the diagnostic functions.

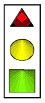

The multicolour «LED» is the key indicating element for both visual diagnosis and interface diagnosis.

s Red

l Yellow

o Green

Colour code table		
Status	Colour code	Colour
Oil pre-heater heats, waiting time «tw»	llllllllll	Yellow
Ignition phase, ignition controlled	lmlmlmlmlml	Yellow-off
Operation, flame o.k.	oooooooooooo	Green
Operation, flame not o.k.	omomomomomo	Green-off
Undervoltage	lslslslslsl	Yellow-red
Fault, alarm	ssssssssssss	Red
Output of fault code (refer to Fault code table)	smsmsmsmsm	Red-off
Extraneous light prior to burner start-up	osososososo	Green-red
Interface diagnosis	sssssssssssssss	Red flicker light

Key

m Off

l Yellow

o Green

s Red

Diagnosis of cause of fault

After lock-out, the red fault signal lamp remains steady on.

In that condition, the visual diagnosis of the cause of fault according to the error code table can be activated by pressing the lock-out reset button for more than 3 seconds.

Error code table	
Blink code	**Possible cause**
2 blinks **	No establishment of flame at the end of TSA ● Faulty or soiled fuel valves ● Faulty or soiled flame detector ● Poor adjustment of burner, no fuel ● Faulty ignition
3 blinks ***	Free
4 blinks ****	Extraneous light on burner startup
5 blinks *****	Free
6 blinks ******	Free
7 blinks *******	Too manny losses of fleme during operation (limitattion og the number of repetitions) ● Faulty or soiled fuel valves ● Faulty or soiled flame detector ● Poor adjustment of burner
8 blinks ********	Time supervision oil pre-heater
9 blinks *********	Free
10 blinks **********	Wiring error or internal error, output contacts

During the time the cause of fault is diagnosed, the control outputs are deactivated.

- Burner remains shut down
- Fault status signal «AL» at terminal 10 is activated

The diagnosis of the cause of fault is quit and the burner switched on again by resetting the burner control.

Press lock-out reset button for about 1 second (< 3 seconds).

Connection diagram and internal diagram

LMO14

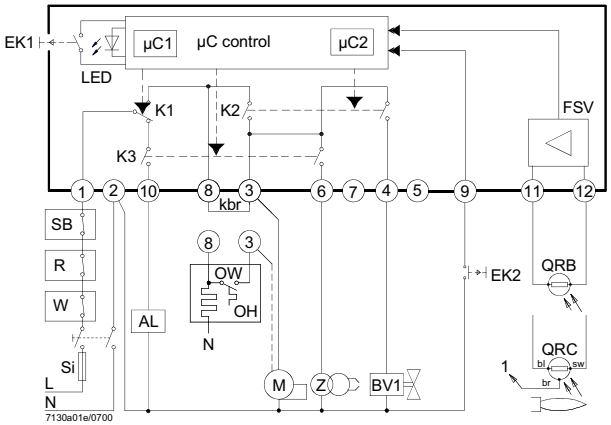

LMO24 - LMO44

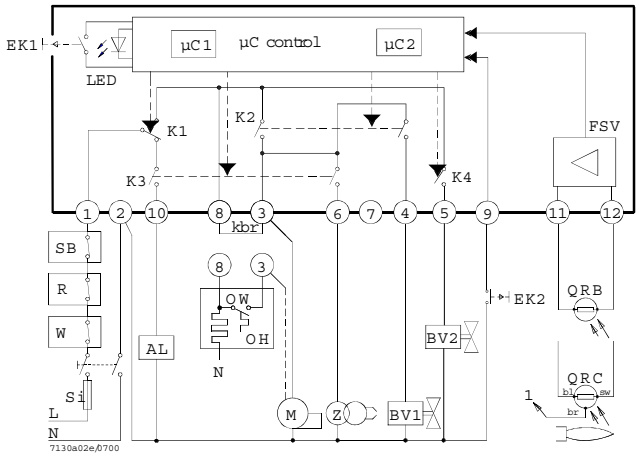

Control sequence

LMO14

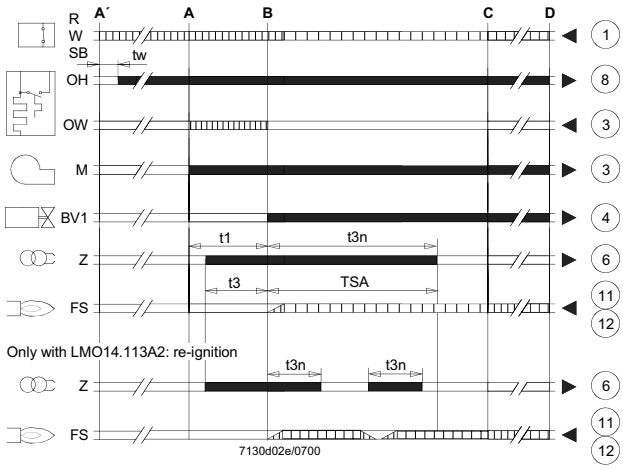

LMO24 - LMO44

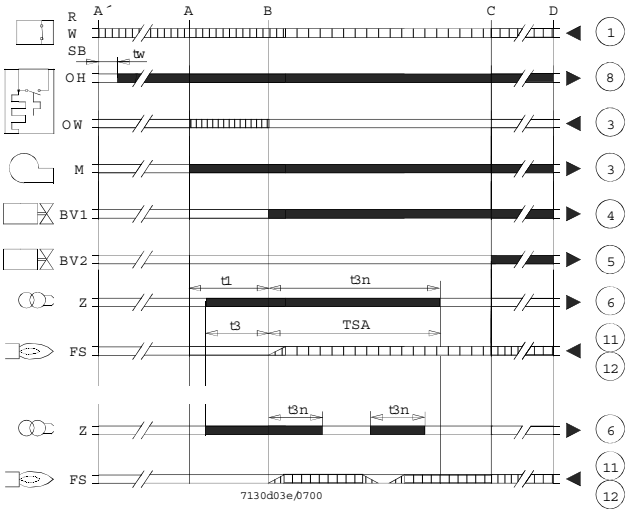

Key

AL	Alarm device
kbr...	Cable link (required only when no oil pre-heater is used)
BV...	Fuel valve
EK1	Lock-out reset button
EK2	Remote lock-out reset button
FS	Flame signal
FSV	Flame signal amplifier
K...	Contacts of control relay
LED	3-colour signal lamps
M	Burner motor
OW	Release contact of oil pre-heater
t1	Pre-purge time
t3	Pre-ignition time
t3n	Post-ignition time
A´	Beginning of start-up sequence with burners using an oil pre-heater
A	Beginning of start-up sequence with burners using no oil pre-heater
	Controller output signals
	Required input signals
OH	Oil pre-heater
QRB	Photoresistive detector
QRC	Blue-flame detector
bl = blue	
br = brown	
sw = black	
R	Control thermostat or pressurestat
SB	Safety limit thermostat
Si	External primary fuse
W	Limit thermostat or pressure switch
Z	Ignition transformer
t4	Interval from flame signal to release «BV2»
TSA	Ignition safety time
tw	Waiting time for oil pre-heating
B	Time of flame establishment
C	Operating position
D	Controlled shut-down by «R»
µC1	Microcontroller 1
µC2	Microcontroller 2

General unit data

Mains voltage	AC 230 V +10 % / -15 %
	AC 120 V +10 % / -15 %
Mains frequency	50...60 Hz ±6 %
External primary fuse (Si)	6.3A (slow)
Power consumption	12 VA
Mounting orientation	optional
Weight	approx. 200 g
Degree of protection	IP40 (to be ensured through mounting)
Perm. cable lengths	max. 3m at line capacitance of 100 pF/m
Detector cable laid separately	10 m
Remote reset laid separately	20m

	LMO14	LMO24	LMO44
Terminal 1	5 A	5 A	5 A
Terminals 3 and 8	3 A	5 A	5 A
Terminals 4, 5 and 10	1 A	1 A	1A
Terminals 6	1 A	1 A	2A

Flame supervision with QRB and QRC

	QRB	**QRC**
Min. detector current required (with flame)	45 µA	70 µA
Min detector current permitted (without flame)	5.5 µA	5.5 µA
Max. possible with flame (tipically)	100 µA	100 µA

Measurement circuit for detector current

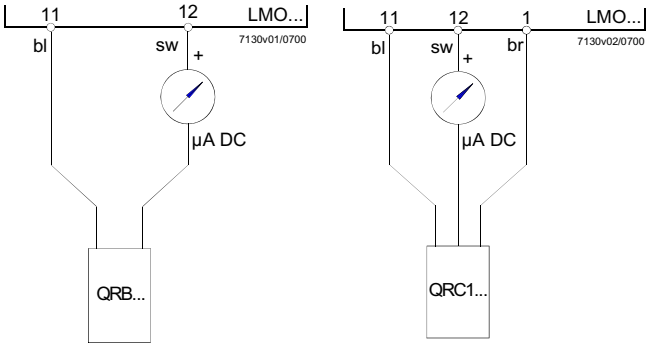

Key

µA DC	DC microamperometer with an internal resistance of 5 kW max.
bl	Blue
sw	Black
br	Brown

C.I.B. UNIGAS S.p.A.
Via L.Galvani, 9 - 35011 Campodarsego (PD) - ITALY
Tel. +39 049 9200944 - Fax +39 049 9200945/9201269
web site: www.cibunigas.it - e-mail: cibunigas@cibunigas.it

Note: specifications and data subject to change. Errors and omissions excepted.

LME73.000Ax + PME73.831AxBC
LME73.831AxBC

Service instruction manual

M12921CB Rel.1.2 02/2016

GENERAL FEATURES

LME/ is suitable for gas, light and heavy oil burners
LME7 series has two devices: LME73.000 (hardware) and PME73.831AxBC (programmable unit). The LME73.831AxBC is also available: it has a built in software and it isa not programmable.
LME7 is inside the control panel. If supplied, PME73.831BC is inside the LME7;
The display AZL23.. or AZL21.. is available for Service and hardware setup.

LME7… are used for the startup and supervision of 2-stage/progressive, modulating forced draft gas burners in intermittent operation.
The flame is supervised with an ionization probe, optionally with UV flame detector QRA2..., QRA4.U or QRA10....
Integrated in the LME7... basic unit are:
• Burner control
• BCI
• Control for one actuator
• Lockout reset button (info button)
• 3 multicolor signal lamp LED for operations and fault notifications
• 3 x 7-segment display for service, fault and operating state information
• Interface for program module (no function)
Passwords protect the different parameter levels against unauthorized access. Basic settings that the plant operator can make on site require no password.
Functions:
- Undervoltage detection
- Electrical remote reset facility
- Accurate control times thanks to digital signal handling
- Multicolor indication of fault status and operating state messages
- Air pressure supervision with function check of air pressure switch during start and operation (gas)
- Repetition limitation
- Controlled intermittent operation after 24 hours of continuous operation*
- BCI
- Indication of program sequence

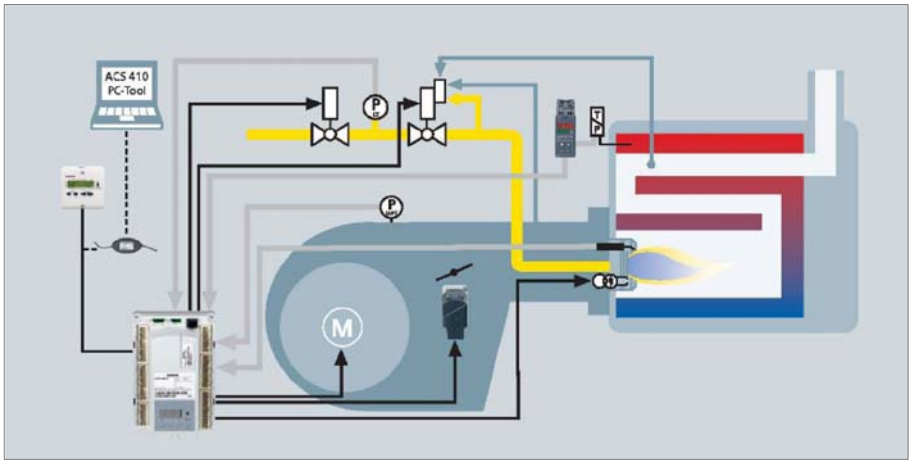

* after no more than 24 hours of continuous operation, the burner control initiates automatic controlled shutdown followed by a restart.

User interface :

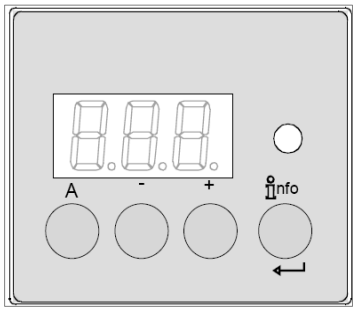

A	***Button A*** - Display preset output - In lockout position: Power value to the time of fault
Info	I***nfo and Enter button*** - Reset in the event of fault, changeover visual diagnostic of the cause of fault (refer to chapter Diagnostics of cause of fault)
-	***- button*** - Display flame signal current 2 or phases display - In lockout position: MMI phase to the time of fault
+	***+ button*** - Display flame signal current 1 or phases display - In lockout position: MMI phase to the time of fault
	3 multicolor signal lamp - Refer to chapter “Blink code table”
- + +	**+ and - button: Escape function** (press + and - simultaneously) - No adoption of value - One menu level up - Keep depressed for >1second for backup / restore function

First startup when PME is supplied or PME replacement:

First startup:
1) insert a new PME
2) turn the power on; The diplay shows "rst" and "PrC" one after the other.
3) keep pushing the INFO button more than 3 seconds; "run" appears; PME parameters will be transferred to LME
4) at the end, "End" and "rst" appears one after the other; Later (2'), the control box locks out "Loc 138"
5) reset the control box by pressing the INFO button (for less than 3 seconds)
Now the display shows "OFF"; the burner is ready to be started.

Replacement:
1) Turn off the burner, replace the existing PME with a new one
2) For the first startup, repeat the above procedure, from step 2.

List of phase display on board LME :

Phase number of 7-segment display	**LED**	**Function**
Standby		
OFF	Off	Standby, waiting for heat demand
P08	Off	Mains ON / test phase (e.g. detector test)
Startup		
P21	Yellow	Safety valve ON, air pressure switch test / POC test (timeout / locking
P22	Yellow	Fan motor ON / air pressure switch test / settling time
P24	Yellow	Actuator opens in prepurging position
P30	Yellow	Prepurging
P36	Yellow	Actuator closes in ignition load / low-fire position
P38	Yellow blinking	Preignition time
P40	Yellow blinking	1st safety time (TSA1) / ignition transformer ON
P42	Green	Safety time (ignition transformer OFF), flame check
P44	Green	Interval: End of safety time and fuel valve 1 (V1) ON Interval: End of safety time and load controller (LR) release
P50 Green	P50 Green	2nd safety time (TSA2)
P54 Green	P54 Green	P259.01: Actuator opens in > low-fire
P54 Green	P54 Green	P260: Actuator closes in low-fire
oP1 Green	oP1 Green	Interval until release of load controller target (analog or 3-position step input)
Operation		
oP	Green	Operation, modulating operation
Shutdown		
P10	Yellow	Shutdown, actuator opens in CLOSE position (home run)
P72	Yellow	Actuator opens in high-fire position / end of operation
P74	Yellow	Postpurging
Valve proving		
P80	Yellow	Test space evacuating
P81	Yellow	Checking time fuel valve 1
P82	Yellow	Test space filling
P83	Yellow	Checking time fuel valve 2
Waiting phases (start prevention)		
P01	Red / yellow blinking	Undervoltage
P02	Yellow	Safety loop open
P04	Red / green blinking	Extraneous light on burner startup (timeout / locking after 30 s)
P90	Yellow	Pressure switch-min open
Lockout		
LOC	Red	Lockout phase

Operation :

	The lockout reset button (info button) (EK) is the key operating element for resetting the burner control and for activating / deactivating the diagnostics functions.
	The multicolor signal lamp (LED) is the key indicating element for visual diagnostics.

Both lockout reset button (EK) and signal lamp (LED) are located in the control panel.
There are 2 diagnostics choices:
1. Visual diagnostics: Indication of operating state or diagnostics of cause of fault
2. Diagnostics: Via internal display or to AZL2.. display and operating unit
Visual diagnostics:
In normal operation, the different operating states are indicated in the form of color codes according to the color code table given below.

Color code table for multicolor signal lamp (LED) **:**

State	Color code	Color
Waiting time (tw), other waiting states	❍.....	OFF
Ignition phase, ignition controlled	● ❍ ● ❍ ● ❍ ● ❍ ● ❍ ●	Blinking yellow
Operation, flame o.k.	□.....	Green
Operation, flame not o.k.	□ ❍ □ ❍ □ ❍ □ ❍ □ ❍	Blinking green
Extraneous light on burner startup	□ ▲ □ ▲ □ ▲ □ ▲ □ ▲	Green-red
Undervoltage	● ▲ ● ▲ ● ▲ ● ▲ ● ▲	Yellow-red
Fault, alarm	▲.....	Red
Error code output (refer to «Error code table»)	▲❍ ▲❍ ▲❍ ▲❍	Blinking red
Interface diagnostics	▲ ▲ ▲ ▲ ▲ ▲ ▲ ▲	Red flicker light
Heating request	●.....	Yellow
Heating request	● ● ▲ ● ● ▲ ● ● ▲ ● ●	Yellow

Key

.....	Steady on
❍	Led off
▲	Led red
●	Led yellow
□	Led green

Program sequence :

Version 1:

- Ignition load < low-fire
- Prepurging in high-fire
- Parameter 515 = 1 (condition parameter 259.01 > 0 seconds)

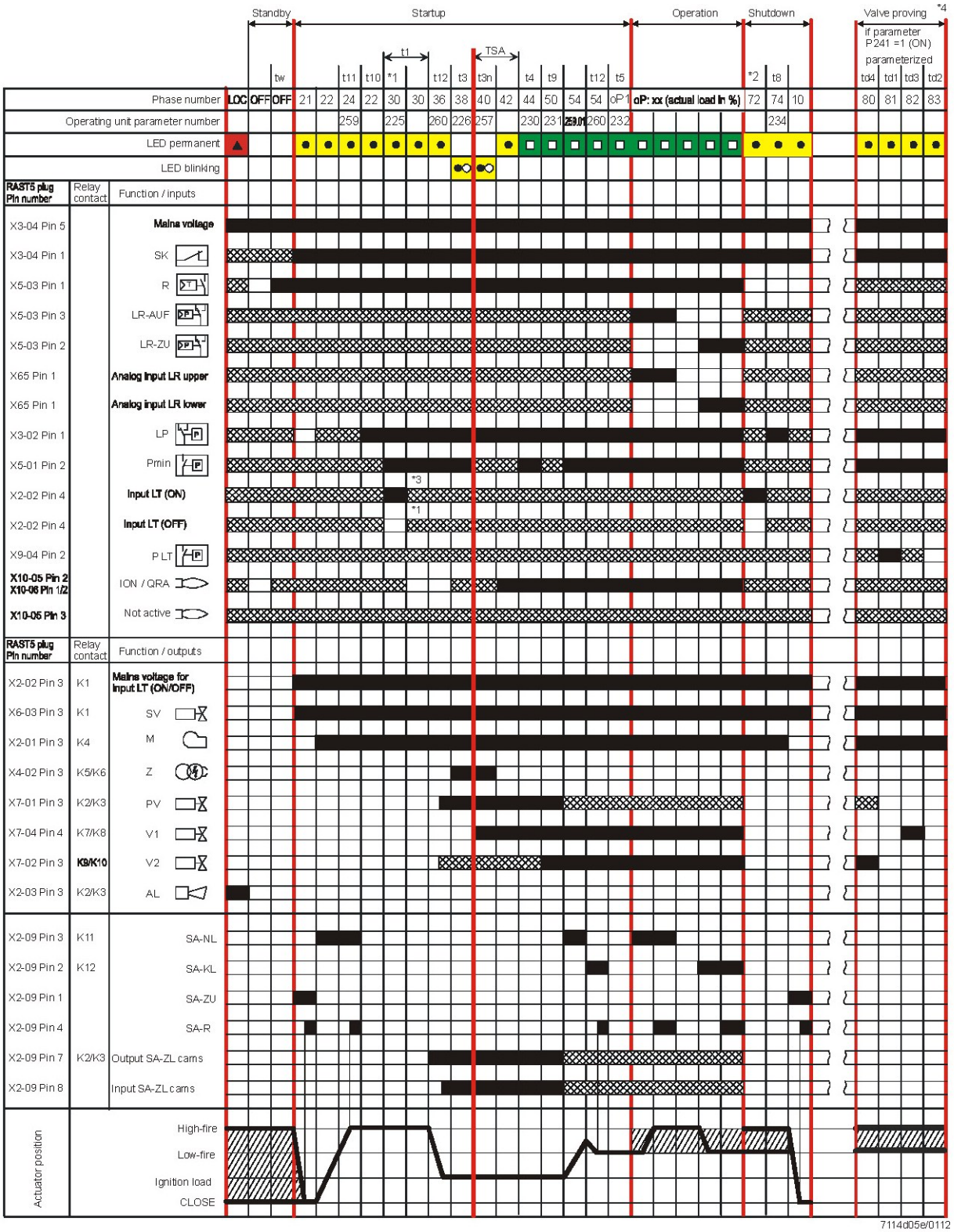

Program sequence :

Version 2:

- Ignition load > low-fire
- Prepurging in high-fire
- Parameter 515 = 1 (condition parameter 259.01 = 0 seconds)

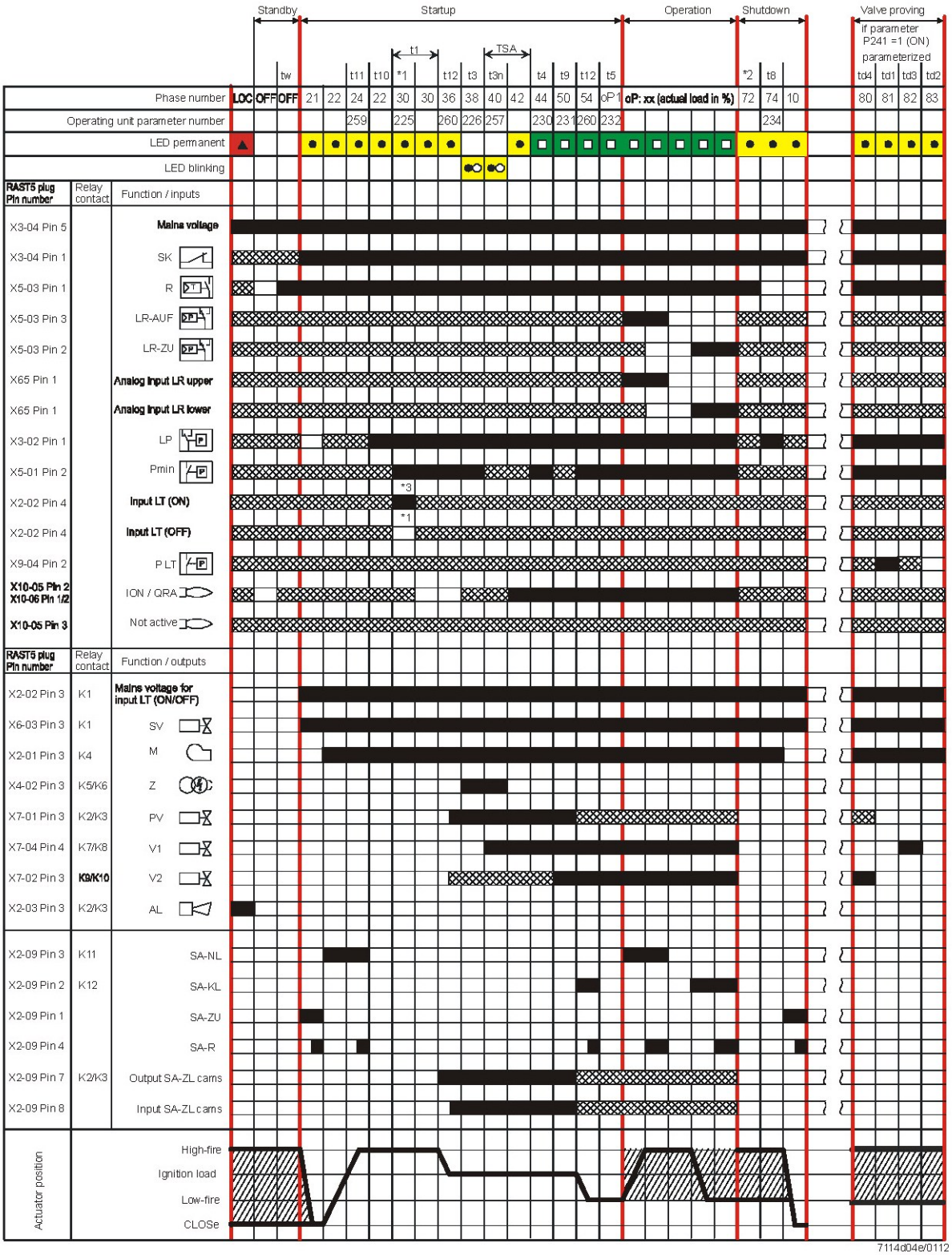

Phase number	Function
LOC	Lockout phase
OFF	Standby, waiting for heat demand
oP	Operation, modulating operation
oP1	Interval until release of load controller target (analog or 3-position step input)
01	Under voltage
02	Safety loop open
04	Extraneous light on burner startup (timeout/locking after 30 seconds)
08	Mains ON/test phase (e.g. detector test)
10	Shutdown, actuator opens in CLOSE position (homerun)
21	Safety valve ON, air pressure switch OFF, actuator opens in CLOSE position
22	Part 1: Fan motor ON
	Part 2: Specified time (t10) air pressure switch (LP)
	Message (timeout) stabilization air pressure switch
24	Actuator opens in prepurge position
30	Part 1: Prepurge time (t1) without extraneous light test
	Valve proving after mains ON, lockout
	Part 2: Prepurge time (t1) with extraneous light test
36	Actuator closes in ignition load
38	Preignition (t3)
40	Postignition time (t3n), parameter 257 + 0.3 seconds
42	Flame detection
44	Interval (t4): End of safety time (TSA) and burner valve 2 ON
50	2nd safety time (t9)
54	Parameter 259.01: Actuator opens in > low-fire
	Parameter 260: Actuator closes in low-fire
72	End of operation, checking if valve proving (LT) shall be performed
74	Postpurging (t8)
80	Test space evacuation (td4)
81	Test time (td1) fuel valve 1 (V1)
82	Test space filling (td3)
83	Test time (td2) fuel valve 2 (V2)
90	Pressure switch-min open □ safety shutdown
*1	Valve proving is conducted when…
	- parameter 241.00 = 1 and parameter 241.02 = 1, or
	- parameter 241.00 = 1 and parameter 241.01 = 0
*2	Valve proving is conducted when…
	- parameter 241.00 = 1 and parameter 241.02 = 1, or
	- parameter 241.00 = 1 and parameter 241.01 = 1
*3	Valve proving (LT) will not be performed

Error code table :

Red blink code of fault signal lamp (LED)	Possible cause
2 x blinks	No establishment of flame at the end of the safety time (TSA)
	- Faulty or soiled flame detector - Faulty or soiled fuel valves - Poor adjustment of burner, no fuel - Faulty ignition equipment
3 x blinks	Air pressure switch (LP) faulty - Loss of air pressure after specified time (t10) - - Air pressure switch (LP) welded in no-load position
4 x blinks	Extraneous light on burner startup
5 x blinks	Time supervision air pressure switch (LP) - Air pressure switch (LP) welded in working position
6 x blinks	Actuator position not reached - Actuator faulty - Wrong adjustment of cam - Actuator defective or blocked - False connection - Misadjustment
7 x blinks	Too many losses of flame during operation (limitation of repetitions) - Faulty or soiled flame detector - Faulty or soiled fuel valves - Poor adjustment of burner
8 x blinks	Free
9 x blinks	Free
10 x blinks	Wiring error or internal error, output contacts, other faults
12 x blinks	Valve proving (LT) - Fuel valve 1 (V1) leaking
13 x blinks	Valve proving (LT) - Fuel valve 2 (V2) leaking
14 x blinks	Error in connection with valve closure control POC
15 x blinks	Error code ≥15 Error code 22: Error of safety loop (SL)

During the time the cause of fault is diagnosed, the control outputs are deactivated:
- Burner remains shut down
- External fault indication (AL) at terminal X2-03, pin 3 steady on

Diagnostics of cause of fault is quit and the burner switched on again by resetting the burner control. Press the lockout reset button (info button) for about 1 second (<3 seconds).

Flame detection – detection electrode :

Short-circuit current	Max. AC 1 mA
Required detector current	Min. DC 2 µA, display approx. 45 %
Possible detector current	Max. DC 3 µA, display approx. 100 %
Permissible length of detector cable (laid separately)	30 m (core-earth 100 pF/m)

Measuring circuit

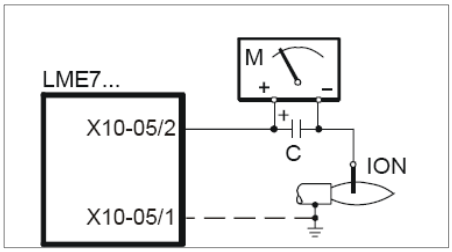

Keys

C - Electrolytic condenser 100...470 µF; DC 10...25 V
ION - Ionization probe
M - Microammeter Ri max. 5,000 Ω

Flame detection – UV probe :

Threshold values when flame is supervised by QRA...

- Start prevention (extraneous light)	Intensity (parameter 954) approx. 12 %
- Operation	Intensity (Parameter 954) approx. 13 %
Operating voltage	AC 280 V ±15 %
Mains frequency	50...60 Hz ±6 %
Required detector current	Min. 70 µA
Possible detector current	
- Operation	Max. 700 µA
Perm. length of detector cable	
- Normal cable, laid separately [1])	Max. 100 m

[1]) Multicore cable not permitted

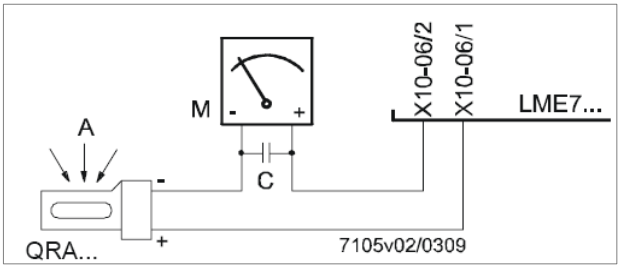

Keys

A - Exposure to light
C - Electrolytic condenser 100...470 µF; DC 10...25 V
M - Microammeter Ri max. 5,000 Ω

Warning!
Input QRA... is not short-circuit-proof!
Short-circuits of X10-06/2 against earth can destroy the QRA... input
Simultaneous operation of flame detector QRA... and detection electrode is not permitted
To make certain the age of the UV tube can be determined, the LME7... basic unit must always be connected to mains supply.

Gas proving system :

Valve proving is dependent on input valve proving ON / OFF (X2-02). When a leak is detected, the gas valve proving function ensures that the gas valves will not be opened and that ignition will not be switched on. Lockout will be initiated.
.

Valve proving with separate pressure switch (P LT)
Step 1: td4 – Evacuation of test space
Gas valve on the burner side is opened to bring the test space to atmospheric pressure.
Step 2: td1 – Test atmospheric pressure
When the gas has closed, the gas pressure in the test space must not exceed a certain level.
Step 3: td3 Filling of test space
Gas valve on the mains side opens to fill the test space.
Step 4: td2 – Test gas pressure
When the gas valve has closed, the gas pressure in the test space must not drop below a certain level.

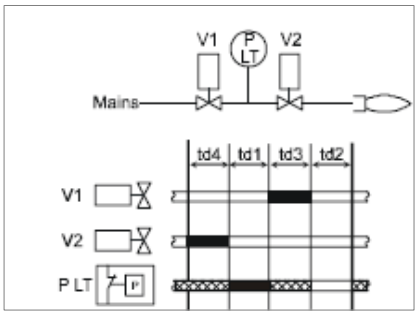

Controllo tenuta con pressostati separati

Keys
td1 Test atmospheric pressure
td2 Test gas pressure
td3 Filling of test space
td4 Evacuation of test space
V… Fuel valve
PLT Pressure switch valve proving
Input / output signal 1 (ON)
Input / output signal 0 (OFF)
Input permissible signal 1 (ON) or 0 (OFF)

No.	***Parameter***
242	Valve proving evacuation of test space
243	Valve proving time test atmospheric pressure
244	Valve proving filling of test space
245	Valve proving time test gas pressure

Instruction, control and modify via AZL2x :

The AZL2x.. display/programming unit is shown below:

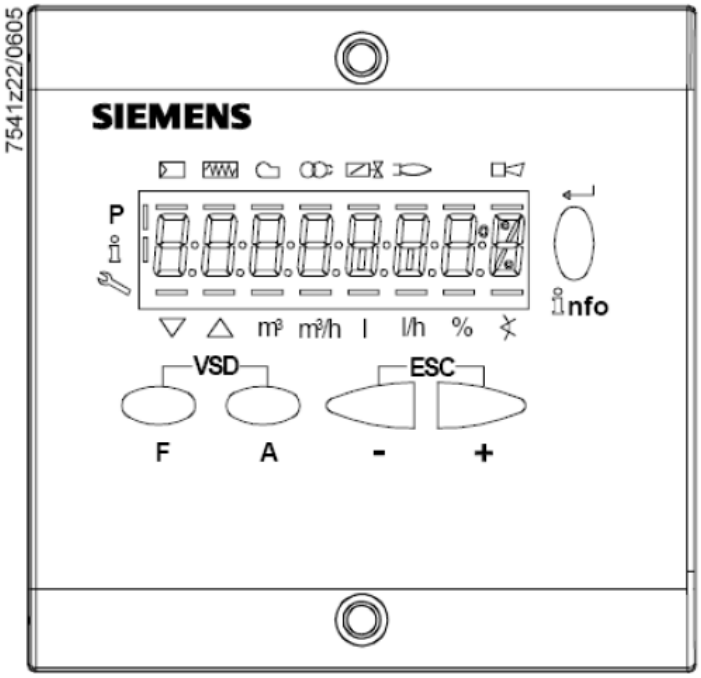

The keys functions are the following:

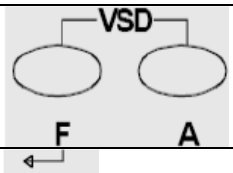	Key F + A While pressing the two keys contemporarly, the code message will appear: by entering the proper password it is possible to access the Service mode.
	Info and Enter keys Used for Info and Service menues Used as Enter key in the setting modes Used as Reset key in the burner operation mode Used to enter a lower level menu
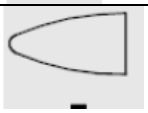	Key - Used for one menu level down Used to decrease a value
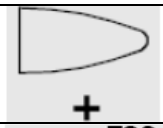	Key + Used for one menu level up Used to increase a a value
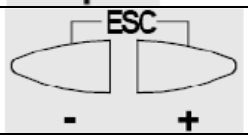	Keys (+ & -)= ESC By pressing + and - at the same time, the ESCAPE function is performed No adoption of value One menu level down

The display will show these data:

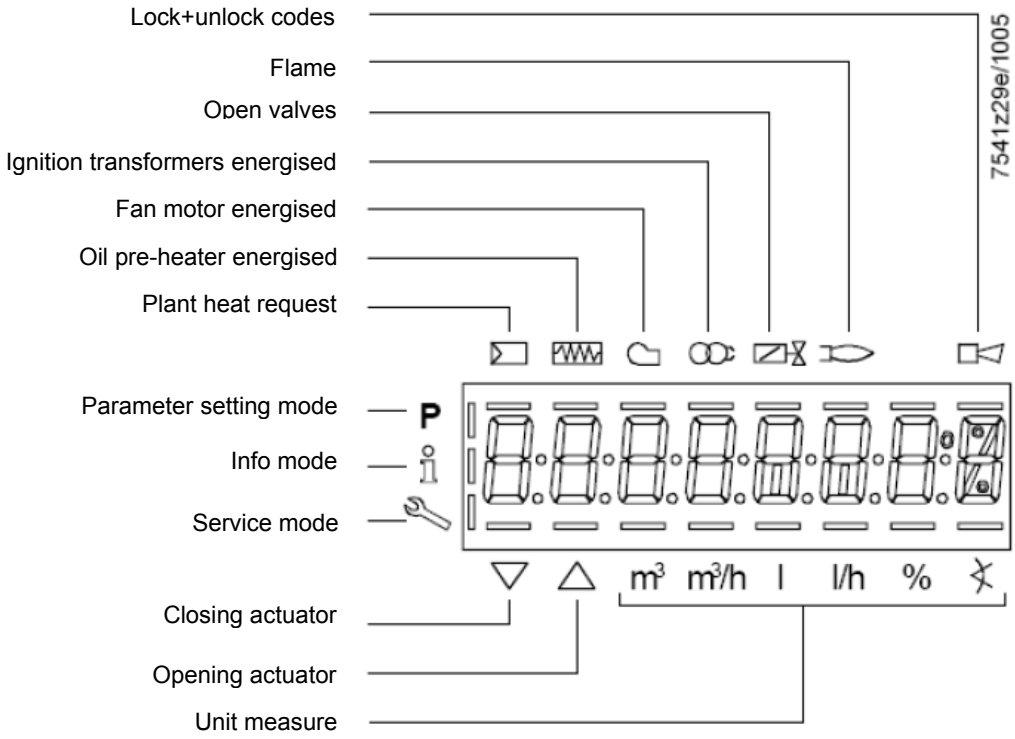

While pushing the button together with whatever else button, LME73 locks out; the display shows

On stand-by position,

appears

On operation, all the phases appears with their number. 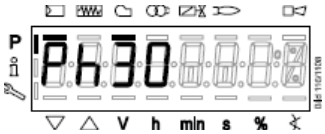

List of phase with display AZL2x :

Phase number	Function
Standby	
OFF	Standby, waiting for heat request
Ph08	Power ON / test phase (e.g. detector test)
Startup	
Ph21	Safety valve ON, air pressure switch test / POC test (timeout / locking after 5 seconds), actuator opens in low-fire position / CLOSE position
Ph22	Fan motor ON or air pressure switch test / settling time
Ph24	Actuator travels to the prepurge position
Ph30	Prepurging
Ph36	Actuator closes until ignition load / low-fire is reached, and parameter 259.02: Actuator opens to a position > ignition load
Ph38	Preignition
Ph40	1st safety time (TSA1) / ignition transformer ON
Ph42	Safety time (ignition transformer OFF), flame check
Ph44	Interval: End of safety time and fuel valve 1 (V1) ON
Ph50	2nd safety time (TSA2)
Ph54	P259.01: Actuator opens in > low-fire
Ph54	P260: Actuator closes in low-fire
oP1	Interval until release of load controller target (analog or 3-position step input)
Operation	
oP	Operation, modulating operation
Shutdown	
Ph10	Shutdown, actuator opens in CLOSE position (home run)
Ph72	Actuator opens in high-fire position / end of operation
Ph74	Postpurging
Valve proving	
Ph80	Test space evacuating
Ph81	Checking time fuel valve 1
Ph82	Test space filling
Ph83	Checking time fuel valve 2
Waiting phases (start prevention)	
Ph01	Undervoltage
Ph02	Safety loop open
Ph04	Extraneous light at burner startup (timeout / locking after 30 seconds)
Ph90	Pressure switch-min open → safety shutdown
Lockout	
LOC	Lockout phase

Error code list with operation via internal AZL :

Error code	***Clear text***	***Possible cause***
Loc 2	No establishment of flame at the end of the safety time (TSA)	- Faulty or soiled fuel valves - Faulty or soiled flame detector - Poor adjustment of burner, no fuel - Faulty ignition equipment
Loc 3	Air pressure faulty (air pressure switch (LP) welded in no-load position, decrease to spe-cified time (t10) (air pressure switch (LP) re-sponse time)	Air pressure switch (LP) faulty - Loss of air pressure signal after specified time (t10) - Air pressure switch (LP) is welded in no-load position
Loc 4	Extraneous light	Extraneous light when burner startup
Loc 5	Air pressure faulty, air pressure switch wel-ded in working position	Time out air pressure switch (LP) - Air pressure switch (LP) is welded in working position
Loc 6	Fault of actuator	- Actuator faulty or blocked - Faulty connection - Wrong adjustment
Loc 7	Loss of flame	Too many losses of flame during operation (limitation of repetitions) - Faulty or soiled fuel valves - Faulty or soiled flame detector - Poor adjustment of burner
Loc 8	---	Free
Loc 9	---	Free
Loc 10	Error not relatable (application), internal error	Wiring error or internal error, output contacts, other faults
Loc 12	Valve proving	Fuel valve 1 (V1) leak
Loc 13	Valve proving	Fuel valve 2 (V2) leak
Loc 22	Safety loop open	- Gas pressure switch-max open - Safety limit thermostat cut out
Loc 138	Restore process successful	Restore process successful
Loc 167	Manual locking	Manual locking
Loc: 206	AZL2... incompatible	Use the latest version

Entering the Parameter levels:

y means of a proper use of the keys, it is possible to enter the various level parameters, as shown in the following flow chart :

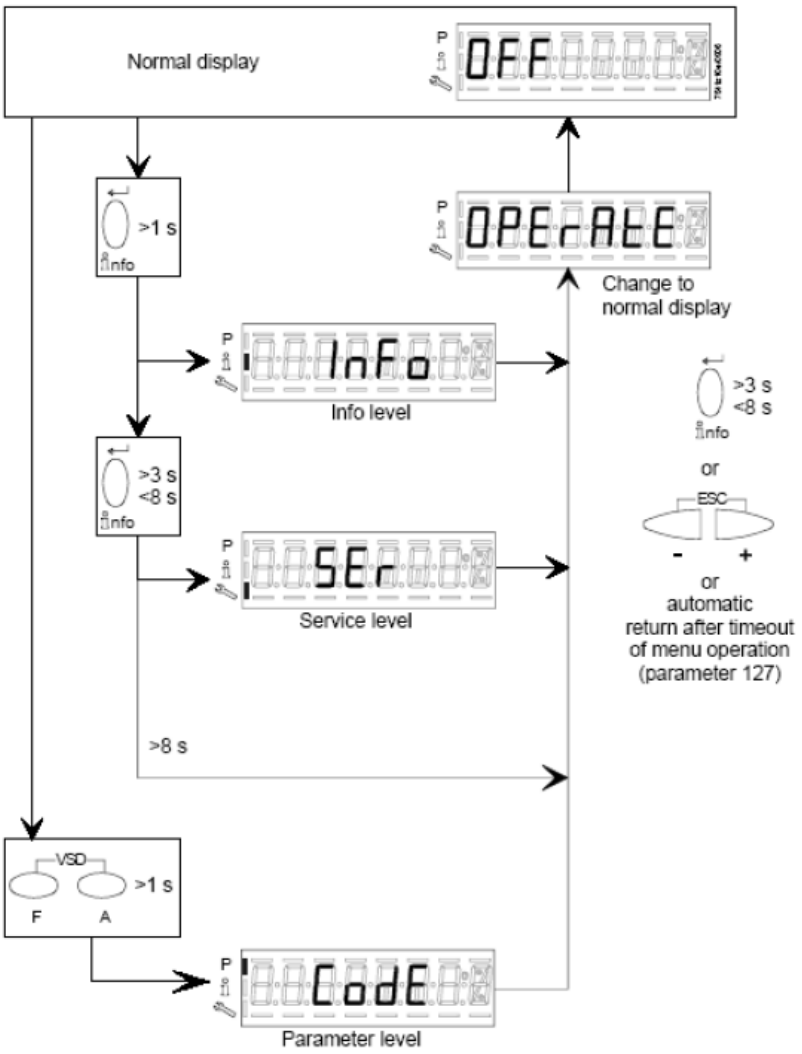

Info level :

Keep pushing the

button until 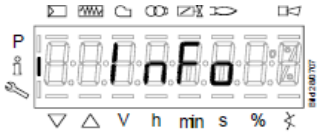

appears. Use + or - for scrolling the parameter list. If on the right side a dash-dot appears, it means the display doesn't show the full description. *Push*

again for 1 to 3 s in order to show the full description.

Below the visible **Info** parameters:

Parameter number	Parameter list PME73.000Ax + PME73.831AxBC LME73.831AxBC	Edit	Value range Min.	Value range Max.	Resolution	Factory setting	Password level reading from level	Password level writing from level
100	**General**							
102	Identification date	Read only	---	---	---		Info	---
103	Identification number	Read only	0	9999	1		Info	---
113	Burner identification	Read only	x	xxxxxxxx	1		Info	---
164	Numbers of startups resettable	Resettable	0	999999	1		Info	Info
166	Total number of startups	Read only	0	999999	1		Info	---
170.00	Switching cycles actuator relay K12	Read only	0	999999	1		Info	---
170.01	Switching cycles actuator relay K11	Read only	0	999999	1		Info	---
170.02	Switching cycles actuator relay K2	Read only	0	999999	1		Info	---
170.03	Switching cycles actuator relay K1	Read only	0	999999	1		Info	---
171	Max. switching cycles actuator relay	Read only	0	999999	1		Info	---

Service level :

Keep pushing the

button until 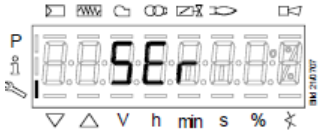

appears. Use + or - for scrolling the parameter list. . If on the right side a dash-dot appears, it means the display doesn't show the full description. *Push*

again for 1 to 3 s in order to show the full description.

Below the visible **Info** parameters:

Parameter number	Parameter list PME73.000Ax + PME73.831AxBC LME73.831AxBC	Edit	Value range Min.	Value range Max.	Resolution	Factory setting	Password level reading from level	Password level writing from level
700	**Error history**							
701	Current error:	Read only					Service	---
	00: Error code		2	255	1			
	01: Startup meter reading		0	999999	1			
	02: MMI phase		---	---	---			
	03: Power value		0%	100%	1			
702	Error history former 1:	Read only					Service	---
	00: Error code		2	255	1			
	01: Startup meter reading		0	999999	1			
	02: MMI phase		---	---	---			
	03: Power value		0%	100%	1			
•								
•								
•								
711	Error history former 10:	Read only					Service	---
	00: Error code		2	255	1			
	01: Startup meter reading		0	999999	1			
	02: MMI phase		---	---	---			
	03: Power value		0%	100%	1			

900	**Process data**							
936	Normalized speed	Read only	0%	100%	0.01 %		Service	---
951	Mains voltage	Read only	0 V	LME73.000A1: 175 V LME73.000A2: 350 V	1 V		Service	---
954	Flame intensity	Read only	0%	100%	1%		Service	---

Parameter level (Heating engeneering) :

This level lets the engineer to modify some burner parameters. It is protect with a 4 digit password (SO level) and a 5 digit password (OEM level)
Password input : push **F** and **A** buttons together until the display shows "**code"** and 7 underlines. The left one flashes. By **+** or **-** move the flashing underline until it is on the desired position and push "enter". The underline becomes a dash. By means of **+** or **-,** choose the right character and push "enter". Input the whole password and the **PArA** appears and later on **000 Int** .
Scroll the parameters using **+** or **-: 000Int**, **100**, **200**, **500**, **600 are on the display**. Choose the proper parameter group with the **enter** button and scroll the options with **+** e poi **-** (below the full par set: the two columns on the right give the level access). Choose the parameter to be modified with "enter" is writing is allowed. The parameter now flashes: **+** or **–** modifies the parameter and **enter** confirms. **+** and **-** pushed togther movbe the menu one step back. Push **+** and **-** several times in order to get the home position..

Parameter number	Parameter list PME73.000Ax + PME73.831AxBC LME73.831AxBC	Edit	Value range		Resolution	Factory setting	Password level reading from level	Password level writing from level
			Min.	Max.				
0	**Internal parameter**							
41	Heating engineers password (4 characters)	Edit	xxxx	xxxx	---		---	OEM
42	OEM's password (5 characters)	Edit	xxxxx	xxxxx	---		---	OEM
60	Backup / restore	Edit	Restore	Backup	---		---	SO
100	**General**							
123	Min. power control step	Edit	1%	10%	0.1		SO	SO
140	Mode display of Display and operating unit AZL2... 1 = Standard (program phase) 2 = Flame 1 (QRA... / ION) 3 = Flame 2 (QRB... / QRC...) 4 = Active power (power value)	Edit	1	4	4		SO	SO
200	**Burner control**							
224	Specified time (t10) air pressure switch (LP)	Edit	0 s	13.818 s	0.294 s	12,054	SO	OEM
225	Gas: Prepurge time (t1)	Edit	0 s	1237 s	4.851 s	29,106	SO	OEM
226	Gas: Preignition time (t3)	Edit	1.029 s	37.485 s	0.147 s	2,058	SO	OEM
230	Interval (t4): End of safety time (TSA) - fuel valve 1 (V1) ON	Edit	3.234 s	74.97 s	0.294 s	3,234	SO	OEM
231	Interval (t9): Fuel valve 1 (V1) ON - pilot valve (PV) OFF	Edit	0 s	74.97 s	0.294 s	2,940	SO	OEM
232	Interval (t5): Pilot valve (PV) OFF - load controller (LR) release	Edit	2.058 s	74.97 s	0.294 s	8.820	SO	OEM
234	Gas: Postpurge time (t8)	Edit	0 s	1237 s	4.851 s	0	SO	OEM
239	Gas: Intermittent operation after 24 hours of continuous operation 0=OFF 1=ON	Edit	0	1	1	1	SO	OEM

240	Repetition in the event of loss of flame during operation 0 = None 1 = None 2 = 1 x Repetition	Edit	0	2	1	0	SO	OEM
241.00	Valve proving 0 = Off 1 = On	Edit	0	1	1	1	SO	OEM
241.01	Valve proving 0 = During prepurge time (t1) 1 = During postpurge time (t8)	Edit	0	1	1	0	SO	OEM
241.02	Valve proving 0 = According to P241.01 1 = During prepurge time (t1) and postpurge time (t8)	Edit	0	1	1	0	SO	OEM
242	Valve proving test space evacuating	Edit	0 s	2.648 s	0.147 s	2,646	SO	OEM
243	Valve proving time test atmospheric pressure	Edit	1.029 s	37.485 s	0.147 s	10,290	SO	OEM
244	Valve proving test space filling	Edit	0 s	2.648 s	0.147 s	2,646	SO	OEM
245	Valve proving time test gas pressure	Edit	1.029 s	37.485 s	0.147 s	10,290	SO	OEM
254	Response time detector error 0 = 1 s 1 = 3 s	Edit	0	1	1	0	SO	OEM
257	Gas: Postignition time (t3n – 0.3 seconds)	Edit	0 s	13.23 s	0.147 s	2,205	SO	OEM
259.00	Opening time of actuator (t11) (timeout for lockout)	Edit	0 s	1237 s	4.851 s	67,914	SO	OEM
259.01	Opening time of actuator from ignition load to low-fire position	Edit	0 s	37.485 s	0.147 s	14,994	SO	OEM
259.02	Opening time of actuator from low-fire to ignition load position	Edit	0 s	37.485 s	0.147 s	14,994		
260	Closing time of actuator (t12) (timeout for lockout)	Edit	0 s	1237 s	4.851 s	67,914	SO	OEM
500	**Ratio control**							
515	Actuator position during prepurge time (t1) and postpurge time (t8) 0: Purging in low-fire 1: Purging in high-fire	Edit	0	1	1	1	SO	OEM
560	Pneumatic combustion control 0 = off / 3-step modulation 1 = PWM fan / analog modulation ~~2 = air damper / analog modulation (feedback potentiometer ASZxx.3x required)~~	Edit	0	2	1	1	SO	SO

600	Power setting							
654	Analog input (feedback potentiometer ASZxx.3x required) 0 = 3-position step input 1 = 0...10 V 2 = 0...135 Ω 3 = 0...20 mA 4 = 4...20 mA with lockout at I <4 mA 5 = 4...20 mA	Edit	0	5	1	0	SO	SO

WARNING	
Parameter Num. : **41** **42** **60** **123** **140** **242** **243** **244** **245** **259.01**	**Adjustable parameters from SO or OEM levels for LME73.831AxBC**

Note: Specifications and data subject to change. Errors and omissions excepted.