RG91
RG92

Light oil burners
Double Stage

MANUAL OF INSTALLATION - USE - MAINTENANCE

CIB UNIGAS

BURNERS - BRUCIATORI - BRULERS - BRENNER - QUEMADORES - ГОРЕЛКИ

M039192CB Rev. 4.0 10/2020

DANGERS, WARNINGS AND NOTES OF CAUTION

THIS MANUAL IS SUPPLIED AS AN INTEGRAL AND ESSENTIAL PART OF THE PRODUCT AND MUST BE DELIVERED TO THE USER.

INFORMATION INCLUDED IN THIS SECTION ARE DEDICATED BOTH TO THE USER AND TO PERSONNEL FOLLOWING PRODUCT INSTALLATION AND MAINTENANCE.

THE USER WILL FIND FURTHER INFORMATION ABOUT OPERATING AND USE RESTRICTIONS, IN THE SECOND SECTION OF THIS MANUAL. WE HIGHLY RECOMMEND TO READ IT.

CAREFULLY KEEP THIS MANUAL FOR FUTURE REFERENCE.

1) GENERAL INTRODUCTION

- The equipment must be installed in compliance with the regulations in force, following the manufacturer's instructions, by qualified personnel.
- Qualified personnel means those having technical knowledge in the field of components for civil or industrial heating systems, sanitary hot water generation and particularly service centres authorised by the manufacturer.
- Improper installation may cause injury to people and animals, or damage to property, for which the manufacturer cannot be held liable.
- Remove all packaging material and inspect the equipment for integrity.

In case of any doubt, do not use the unit - contact the supplier.

The packaging materials (wooden crate, nails, fastening devices, plastic bags, foamed polystyrene, etc), should not be left within the reach of children, as they may prove harmful.

- Before any cleaning or servicing operation, disconnect the unit from the mains by turning the master switch OFF, and/or through the cut-out devices that are provided.
- Make sure that inlet or exhaust grilles are unobstructed.
- In case of breakdown and/or defective unit operation, disconnect the unit. Make no attempt to repair the unit or take any direct action.

Contact qualified personnel only.

Units shall be repaired exclusively by a servicing centre, duly authorised by the manufacturer, with original spare parts and accessories.

Failure to comply with the above instructions is likely to impair the unit's safety.

To ensure equipment efficiency and proper operation, it is essential that maintenance operations are performed by qualified personnel at regular intervals, following the manufacturer's instructions.

- When a decision is made to discontinue the use of the equipment, those parts likely to constitute sources of danger shall be made harmless.
- In case the equipment is to be sold or transferred to another user, or in case the original user should move and leave the unit behind, make sure that these instructions accompany the equipment at all times so that they can be consulted by the new owner and/or the installer.
- This unit shall be employed exclusively for the use for which it is meant. Any other use shall be considered as improper and, therefore, dangerous.

The manufacturer shall not be held liable, by agreement or otherwise, for damages resulting from improper installation, use and failure to comply with the instructions supplied by the manufacturer.The occurrence of any of the following circustances may cause explosions, polluting unburnt gases (example: carbon monoxide CO), burns, serious harm to people, animals and things:

- Failure to comply with one of the WARNINGS in this chapter
- Incorrect handling, installation, adjustment or maintenance of the burner
- Incorrect use of the burner or incorrect use of its parts or optional supply

2) SPECIAL INSTRUCTIONS FOR BURNERS

- The burner should be installed in a suitable room, with ventilation openings complying with the requirements of the regulations in force, and sufficient for good combustion.
- Only burners designed according to the regulations in force should be used.
- This burner should be employed exclusively for the use for which it was designed.
- Before connecting the burner, make sure that the unit rating is the same as delivery mains (electricity, gas oil, or other fuel).
- Observe caution with hot burner components. These are, usually, near to the flame and the fuel pre-heating system, they become hot during the unit operation and will remain hot for some time after the burner has stopped.

When the decision is made to discontinue the use of the burner, the user shall have qualified personnel carry out the following operations:

a Remove the power supply by disconnecting the power cord from the mains.

b Disconnect the fuel supply by means of the hand-operated shut-off valve and remove the control handwheels from their spindles.

Special warnings

- Make sure that the burner has, on installation, been firmly secured to the appliance, so that the flame is generated inside the appliance fire-box.
- Before the burner is started and, thereafter, at least once a year, have qualified personnel perform the following operations:

a set the burner fuel flow rate depending on the heat input of the appliance;

b set the flow rate of the combustion-supporting air to obtain a combustion efficiency level at least equal to the lower level required by the regulations in force;

c check the unit operation for proper combustion, to avoid any harmful or polluting unburnt gases in excess of the limits permitted by the regulations in force;

d make sure that control and safety devices are operating properly;

e make sure that exhaust ducts intended to discharge the products of combustion are operating properly;

f on completion of setting and adjustment operations, make sure that all mechanical locking devices of controls have been duly tightened;

g make sure that a copy of the burner use and maintenance instructions is available in the boiler room.

- In case of a burner shut-down, reser the control box by means of the RESET pushbutton. If a second shut-down takes place, call the Technical Service, **without trying to RESET further**.
- The unit shall be operated and serviced by qualified personnel only, in compliance with the regulations in force.

3) GENERAL INSTRUCTIONS DEPENDING ON FUEL USED

3a) ELECTRICAL CONNECTION

- For safety reasons the unit must be efficiently earthed and installed as required by current safety regulations.
- It is vital that all saftey requirements are met. In case of any doubt, ask for an accurate inspection of electrics by qualified personnel, since the manufacturer cannot be held liable for damages that may be caused by failure to correctly earth the equipment.
- Qualified personnel must inspect the system to make sure that it is adequate to take the maximum power used by the equipment shown on the equipment rating plate. In particular, make sure that the system cable cross section is adequate for the power absorbed by the unit.
- No adaptors, multiple outlet sockets and/or extension cables are permitted to connect the unit to the electric mains.
- An omnipolar switch shall be provided for connection to mains, as required by the current safety regulations.
- The use of any power-operated component implies observance of a few basic rules, for example:
  - do not touch the unit with wet or damp parts of the body and/or with bare feet;
  - do not pull electric cables;
  - do not leave the equipment exposed to weather (rain, sun, etc.) unless expressly required to do so;
  - do not allow children or inexperienced persons to use equipment;
- The unit input cable shall not be replaced by the user.
  In case of damage to the cable, switch off the unit and contact qualified personnel to replace.
  When the unit is out of use for some time the electric switch supplying all the power-driven components in the system (i.e. pumps, burner, etc.) should be switched off.

3b) FIRING WITH GAS, LIGHT OIL OR OTHER FUELS

GENERAL

- The burner shall be installed by qualified personnel and in compliance with regulations and provisions in force; wrong installation can cause injuries to people and animals, or damage to property, for which the manufacturer cannot be held liable.
- Before installation, it is recommended that all the fuel supply system pipes be carefully cleaned inside, to remove foreign matter that might impair the burner operation.
- Before the burner is commissioned, qualified personnel should inspect the following:

a the fuel supply system, for proper sealing;
b the fuel flow rate, to make sure that it has been set based on the firing rate required of the burner;
c the burner firing system, to make sure that it is supplied for the designed fuel type;
d the fuel supply pressure, to make sure that it is included in the range shown on the rating plate;
e the fuel supply system, to make sure that the system dimensions are adequate to the burner firing rate, and that the system is equipped with all the safety and control devices required by the regulations in force.

- When the burner is to remain idle for some time, the fuel supply tap or taps should be closed.

SPECIAL INSTRUCTIONS FOR USING GAS

Have qualified personnel inspect the installation to ensure that:

a the gas delivery line and train are in compliance with the regulations and provisions in force;
b all gas connections are tight;
c the boiler room ventilation openings are such that they ensure the air supply flow required by the current regulations, and in any case are sufficient for proper combustion.

- Do not use gas pipes to earth electrical equipment.
- Never leave the burner connected when not in use. Always shut the gas valve off.
- In case of prolonged absence of the user, the main gas delivery valve to the burner should be shut off.

Precautions if you can smell gas

a do not operate electric switches, the telephone, or any other item likely to generate sparks;
b immediately open doors and windows to create an air flow to purge the room;
c close the gas valves;
d contact qualified personnel.

- Do not obstruct the ventilation openings of the room where gas appliances are installed, to avoid dangerous conditions such as the development of toxic or explosive mixtures.

DIRECTIVES AND STANDARDS

Gas burners

European directives

-Regulation 2016/426/UE (appliances burning gaseous fuels)
-2014/35/UE (Low Tension Directive)
-2014/30/UE (Electromagnetic compatibility Directive)
-2006/42/EC (Machinery Directive)

Harmonized standards

-UNI EN 676 (Automatic forced draught burners for gaseous fuels)
-EN 55014-1 (Electromagnetic compatibility- Requirements for house hold appliances, electric tools and similar apparatus)
-EN 60204-1:2006 (Safety of machinery – Electrical equipment of machines.)
-CEI EN 60335-1 (Specification for safety of household and similar electrical appliances);
-CEI EN 60335-2-102 (Household and similar electrical appliances. Safety. Particular requirements for gas, oil and solid-fuel burning appliances having electrical connections).
-UNI EN ISO 12100:2010 (Safety of machinery - General principles for design - Risk assessment and risk reduction);

Light oil burners

European directives

-2014/35/UE (Low Tension Directive)
-2014/30/UE (Electromagnetic compatibility Directive)
-2006/42/EC (Machinery Directive)

Harmonized standards

-UNI EN 267-2011(Automatic forced draught burners for liquid fuels)
-EN 55014-1 (Electromagnetic compatibility- Requirements for house hold appliances, electric tools and similar apparatus)
-EN 60204-1:2006 (Safety of machinery – Electrical equipment of machines.)
-CEI EN 60335-1 (Specification for safety of household and similar electrical appliances);
-CEI EN 60335-2-102 (Household and similar electrical appliances. Safety. Particular requirements for gas, oil and solid-fuel burning appliances having electrical connections).
-UNI EN ISO 12100:2010 (Safety of machinery - General principles for design - Risk assessment and risk reduction);

National Standard

-UNI 7824 (Atomizing burners of the monobloc type. Characteristics and test methods)

Heavy oil burners

European Directives

-2014/35/UE (Low Tension Directive)
-2014/30/UE (Electromagnetic compatibility Directive)
-2006/42/EC (Machinery Directive)

Harmonized standards

-UNI EN 267(Automatic forced draught burners for liquid fuels)
-EN 55014-1 (Electromagnetic compatibility- Requirements for house hold appliances, electric tools and similar apparatus)
-EN 60204-1:2006 (Safety of machinery – Electrical equipment of machines.)
-CEI EN 60335-1 (Specification for safety of household and similar electrical appliances);
-CEI EN 60335-2-102 (Household and similar electrical appliances. Safety. Particular requirements for gas, oil and solid-fuel burning appliances having electrical connections).
-UNI EN ISO 12100:2010 (Safety of machinery - General principles for design - Risk assessment and risk reduction);

Norme nazionali / National Standard

-UNI 7824 (Atomizing burners of the monobloc type. Characteristics and test methods.

Gas - Light oil burners

European Directives

-Regulation 2016/426/UE (appliances burning gaseous fuels)
-2014/35/UE (Low Tension Directive)
-2014/30/UE (Electromagnetic compatibility Directive)
-2006/42/EC (Machinery Directive)

Harmonized standards

-UNI EN 676 (Automatic forced draught burners for gaseous fuels)
-UNI EN 267(Automatic forced draught burners for liquid fuels)
-EN 55014-1 (Electromagnetic compatibility- Requirements for house hold appliances, electric tools and similar apparatus)
-EN 60204-1:2006 (Safety of machinery – Electrical equipment of machines.)
-CEI EN 60335-1 (Specification for safety of household and similar electrical appliances);
-CEI EN 60335-2-102 (Household and similar electrical appliances. Safety. Particular requirements for gas, oil and solid-fuel burning appliances having electrical connections).
-UNI EN ISO 12100:2010 (Safety of machinery - General principles for design - Risk assessment and risk reduction);

Norme nazionali / National Standard

-UNI 7824 (Atomizing burners of the monobloc type. Characteristics and test methods.

Gas - Heavy oil burners

European directives:

-Regulation 2016/426/UE (appliances burning gaseous fuels)
-2014/35/UE (Low Tension Directive)
-2014/30/UE (Electromagnetic compatibility Directive)
-2006/42/EC (Machinery Directive)

Harmonized standards

-UNI EN 676 (Automatic forced draught burners for gaseous fuels)
-EN 55014-1 (Electromagnetic compatibility- Requirements for house hold appliances, electric tools and similar apparatus)
-EN 60204-1:2006 (Safety of machinery – Electrical equipment of machines.)
-CEI EN 60335-1 (Specification for safety of household and similar electrical appliances);
-CEI EN 60335-2-102 (Household and similar electrical appliances. Safety. Particular requirements for gas, oil and solid-fuel burning appliances having electrical connections).
-UNI EN ISO 12100:2010 (Safety of machinery - General principles for design - Risk assessment and risk reduction);

National Standard

- UNI 7824 (Atomizing burners of the monobloc type. Characteristics and test methods.

Industrial burners

European directives

-Regulation 2016/426/UE (appliances burning gaseous fuels)
-2014/35/UE (Low Tension Directive)
-2014/30/UE (Electromagnetic compatibility Directive)
-2006/42/EC (Machinery Directive)

Harmonized standards

-EN 55014-1 (Electromagnetic compatibility- Requirements for house hold appliances, electric tools and similar apparatus)
-EN 746-2 (Industrial thermoprocessing equipment - Part 2: Safety requirements for combustion and fuel handling systems)
-UNI EN ISO 12100:2010 (Safety of machinery - General principles for design - Risk assessment and risk reduction);
-EN 60204-1:2006 (Safety of machinery – Electrical equipment of machines.)
-EN 60335-2 (Electrical equipment of non-electric appliances for household and similar purposes. Safety requirements)

Burner data plate

For the following information, please refer to the data plate:

- burner type and burner model: must be reported in any communication with the supplier
- burner ID (serial number): must be reported in any communication with the supplier
- date of production (year and month)
- information about fuel type and network pressure

Type	--
Model	--
Year	--
S.Number	--
Output	--
Oil Flow	--
Fuel	--
Category	--
Gas Pressure	--
Viscosity	--
El.Supply	--
El.Consump.	--
Fan Motor	--
Protection	--
Drwaing n°	--
P.I.N.	--

SYMBOLS USED

WARNING! Failure to observe the warning may result in irreparable damage to the unit or damage to the environment

DANGER! Failure to observe the warning may result in serious injuries or death.

WARNING! Failure to observe the warning may result in electric shock with lethal consequences

Figures, illustrations and images used in this manual may differ in appearance from the actual product.

PART II: INSTALLATION

MOUNTING AND CONNECTING THE BURNER

How to interpret the burner's "Performance curve"

To check if the burner is suitable for the boiler to which it must be installled, the following parameters are needed:

- furnace input, in kW or kcal/h (kW = kcal/h / 860);
- backpressure (data are available on the boiler's ID plate or in the user's manual).

Example:

Furnace input: 600kW

Backpressure: 4mbar

In the "Performance curve" diagram (Fig. 4), draw a vertical line matching the furnace input value and an horizontal line matching the backpressure value. The burner is suitable if the intersection point A is inside the performance curve.

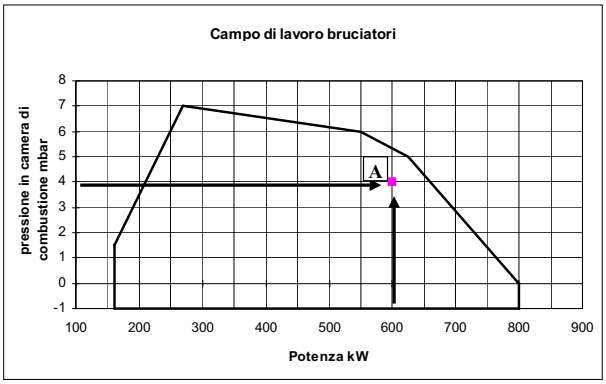

Fig. 4

Data are referred to standard conditions: atmospheric pressure at 1013mbar, ambient temperature at 15°C.

Burner model identification

Burners are identified by burner type and model. Burner model identification is described as follows.

Type **RG92** (1)	Model **G-.** (2) **PR.** (3) **S.** (4) ***.** (5) **A.** (6)
(1) BURNER TYPE	**RG91, RG92**
(2) FUEL	**G -** Light oil
(3) OPERATION (Available versions)	AB - Double stage
(4) BLAST TUBE	**S -** standard **L -** extended
(5) DESTINATION COUNTRY	* - see data plate*
(6) BURNER VERSION	**A -** Standard

Technical specifications

BURNERS		RG91	RG92	RG93
Output	min. -max. kW	1047 - 2093	1280 - 2558	560 - 4100
Light oil rate	min. -max. kg/h	88 - 176	108 - 215	46 - 346
Fuel		Light oil		
Viscosity	cSt @ 40 °C	2 - 7,4		
Density	kg/m^3	840		
Oil train pressure inlet	bar max	1.5 max		
Power supply		400V 3N ~ 50Hz		
Fan motor	kW	4	5,5	7,5
Pump motorPump motor	kW	1,1	1,1	1,1
Total power consumption	kW	5,6	7,0	9,0
Index of protection		IP40		
Approx. weight	kg	220	220	230
Operation		Double stage		
Operating temperature	°C	-10 ÷ +50		
Storage temperature	°C	-20 ÷ +60		
Working service *		Intermittent		

***NOTE ON THE BURNER WORKING SERVICE: for safety reasons, one controlled shutdown must be performed after 24 hours of intermittent operation.**

NOTE: Choosing the nozzle for light oil, consider Hi equal to 42.8MJ/kg.

Performance curves

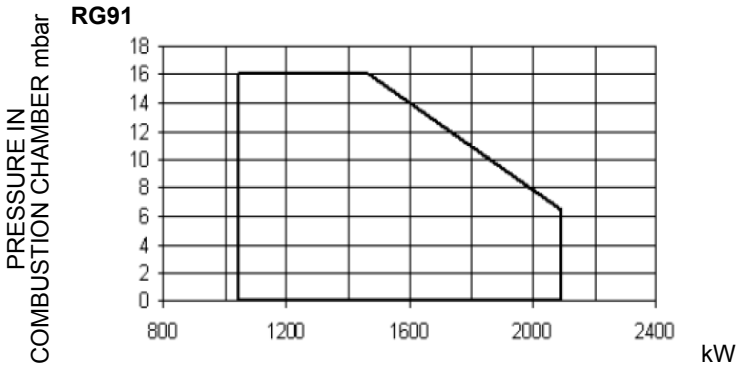

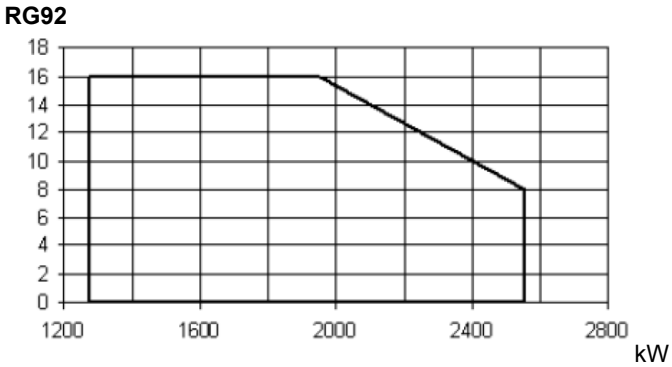

To get the input in kcal/h, multiply value in kW by 860.. Data are referred to standard conditions: atmospheric pressure at 1013mbar, ambient temperature at 15°C.

NOTE: The performance curve is a diagram that represents the burner performance in the type approval phase or in the laboratory tests, but does not represent the regulation range of the machine. On this diagram the maximum output point is usually reached by adjsuting the combustion head to its “MAX” position (see paragraph “Adjusting the combustion head”); the minimum output point is reached setting the combustion head to its “MIN” position. During the first ignition, the combustion head is set in order to find a compromise between the burner output and the generator specifications, that is why the minimum output may be different from the Performance curve minimum.

Overall dimensions (mm)

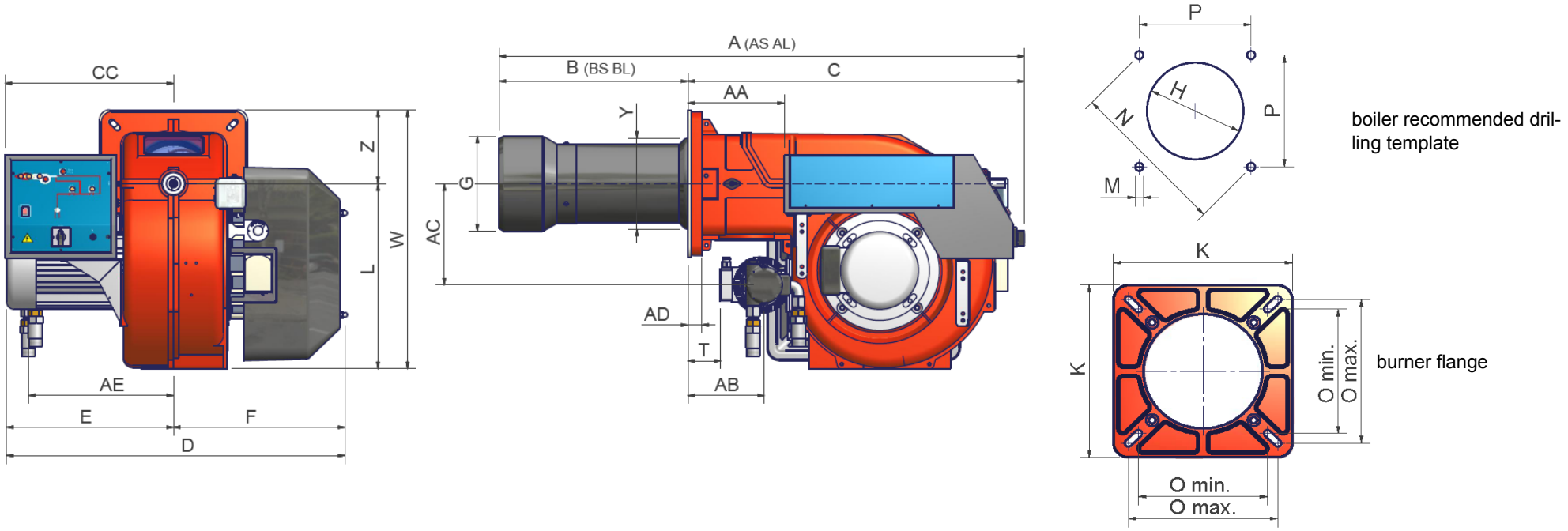

	A (AS*)	A (AL*)	AA	AB	AC	AD	AE	B (BS*)	B (BL*)	C	CC	E	F	G	H	K	L	M	N	Omin	Omax	P	T	W	Y	Z
RG91	1144	1317	242	182	256	35	367	300	473	844	422	419	434	238	268	360	464	M12	417	280	310	295	80	649	228	185
RG92	1138	1311	242	x	x	35	x	294	467	844	422	419	434	266	296	360	464	M12	417	280	310	295	x	649	228	185

*AS/BS: measure referred to burner with standard blast tube provided

*AL/BL: measure referred to burner with extended blast tube provided

MOUNTINGS AND CONNECTIONS

Packing

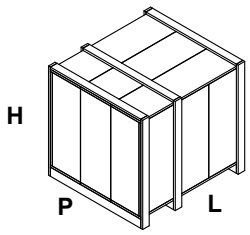

The burners are dispatched in wooden packages whose dimensions are:

1730 mm x 1280 mm x 1020 mm (L x P x H)

Packing cases of this kind are affected by humidity and are not suitable for stacking. The following are placed in each packing case.

- burner;
- light oil flexible hoses;
- light oil filter;
- gasket to be inserted between the burner and the boiler;
- envelope containing this manual.

To get rid of the burner's packing, follow the procedures laid down by current laws on disposal of materials.

Fitting the burner to the boiler

To perform the installation, proceed as follows:

1 drill the furnace plateas decribed in paragraph ("Overall dimensions");

2 place the burner towards the furnace plate: lift and move the burner by means of its eyebolts placed on the top side (see"Lifting and moving the burner");

3 screw the stud bolts (5) in the plate holes, according to the burner's drilling plate described on paragraph "Overall dimensions";

4 place the ceramic fibre rope on the burner flange (if necessary, use a spray adhesive on the flange).

5 install the burner into the boiler;

6 fix the burner to the stud bolts, by means of the fixing nuts, according to the picture below.

7 After fitting the burner to the boiler, ensure that the gap between the blast tube and the refractory lining is sealed with appropriate insulating material (ceramic fibre cord or refractory cement).

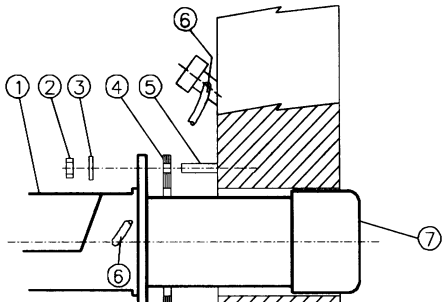

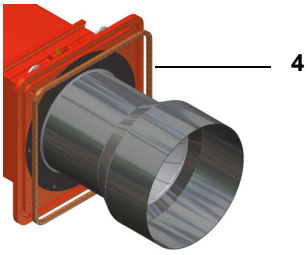

Keys

1 Burner
2 Fixing nut
3 Washer
4 Ceramic fibre plait
5 Stud bolt
7 Blast tube

Handling the burner

WARNING! The handling operations must be carried out by specialised and trained personnel. If these operations are not carried out correctly, the residual risk for the burner to overturn and fall down still persists. To move the burner, use means suitable to support its weight (see paragraph "Technical specifications").
The unpacked burner must be lifted and moved only by means of a fork lift truck.

The burner is mounted on a support provided for handling the burner by means of a fork lift truck: the forks must be inserted into the A anb B ways. Remove the stirrup only once the burner is installed to the boiler.

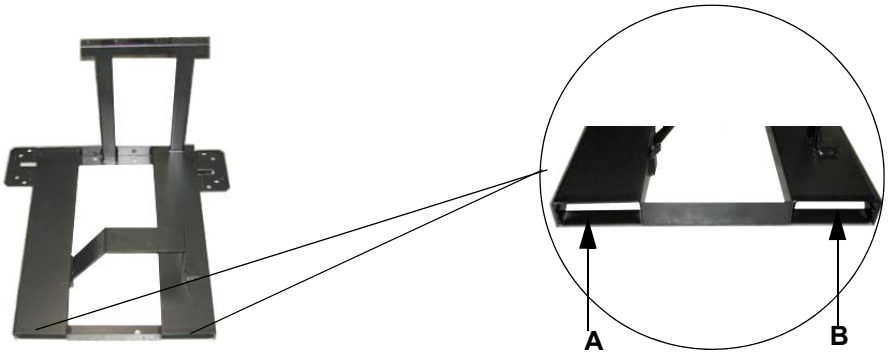

The burner is designed to work positioned according to the picture below. For different installations, please contact the Technical Department.

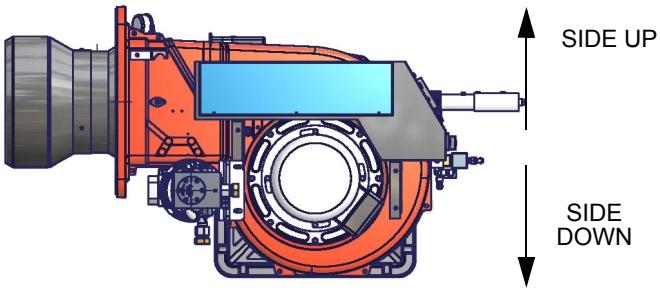

Matching the burner to the boiler

The burners described in this manual have been tested with combustion chambers that comply with EN676 regulation and whose dimensions are described in the diagram . In case the burner must be coupled with boilers with a combustion chamber smaller in diameter or shorter than those described in the diagram, please contact the supplier, to verify that a correct matching is possible, with respect of the application involved. To correctly match the burner to the boiler verify the type of the blast tube . Verify the necessary input and the pressure in combustion chamber are included in the burner performance curve; otherwise the choice of the burner must be revised consulting the burner manufacturer. To choose the blast tube lenght follow the instructions of the boiler manufacturer. In absence of these consider the following:

- Cast-iron boilers, three pass flue boilers (with the first pass in the rear part): the blast tube must protrude no more than **Dist** = 100 mm into the combustion chamber. (Fig. 5)
- Pressurised boilers with flame reversal: in this case the blast tube must penetrate **Dm** 50 ÷ 100 mm into combustion chamber in respect to the tube bundle plate.(Fig. 6)

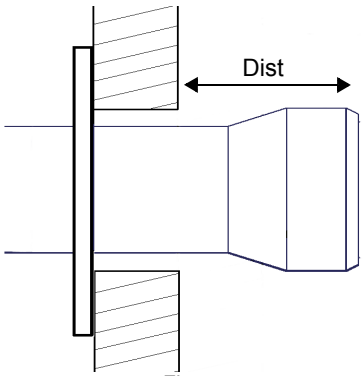

Fig. 5

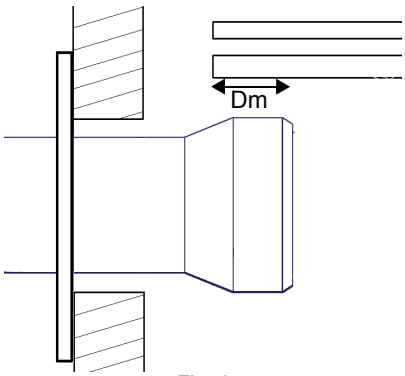

Fig. 6

The length of the blast tubes does not always allow this requirement to be met, and thus it may be necessary to use a suitably-sized spacer to move the burner backwards or to design a blast tube tha suites the utilisation (please, contact the manifacturer).

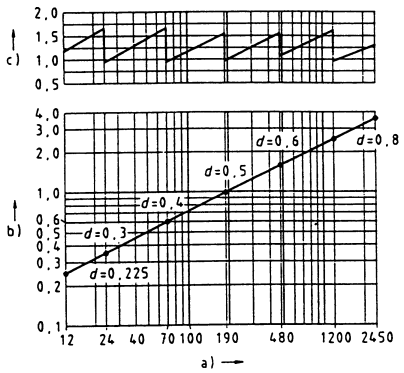

Fig. 7

Key

a) Heat output in kW

b) Lenght of the flame tube in meters

c) Flame tube firing intensity in MW/m^3

d) Combustion chamber diameter (m)

Fig. 7 - Firing intensity, diameter and lenght of the test flame tube as a function of the heat input in kW.

OIL TRAIN CONNECTIONS

Hydraulic diagrams for light oil supplying circuits

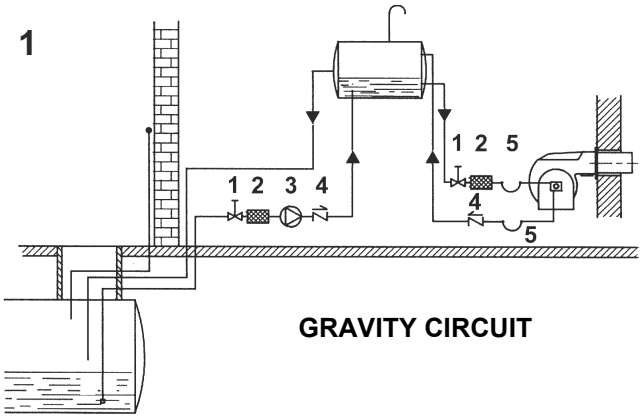

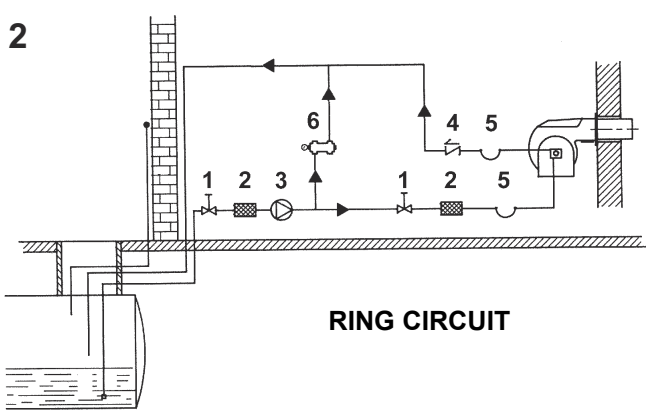

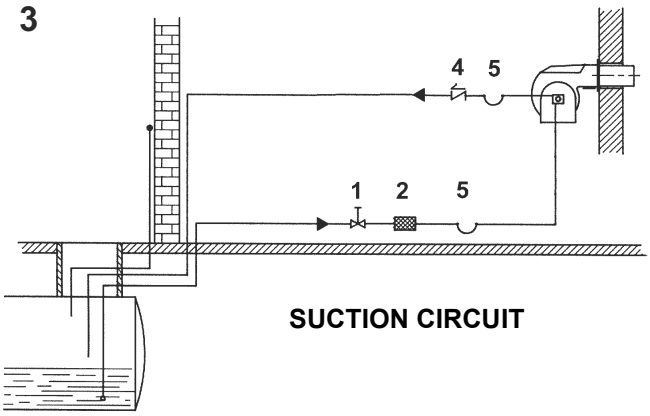

Key

1 Manual valve
2 Light oil filter
3 Light oil feeding pump
4 One way valve
5 Flexible hoses
6 Relief valve

NOTE: in plants where gravity or ring feed systems are provided, install an automatic interception device.

NOTE: in plants where gravity or ring feed systems are provided, install an automatic interception device (see n. 4 - Fig. 8).

Diesel filters

	Item	Note	Connection	Max. operating pressure	Max. operating temperature	Filtering degree	Protec-tion
5	20151PE (*)	-	3/8”	1 bar	-20, 60 °C	100 µ	-
6	20201PL (*)	-	3/8”	1 bar	-20, 60 °C	100 µ	-
7	GA70501	-	1”	4 bar	90 °C	100 µ	IP65

(*) Supplied per pilot diesel fuel if present

Installation diagram of light oil pipes

⚠ **PLEASE READ CAREFULLY THE "WARNINGS" CHAPTER AT THE BEGINNING OF THIS MANUAL.**

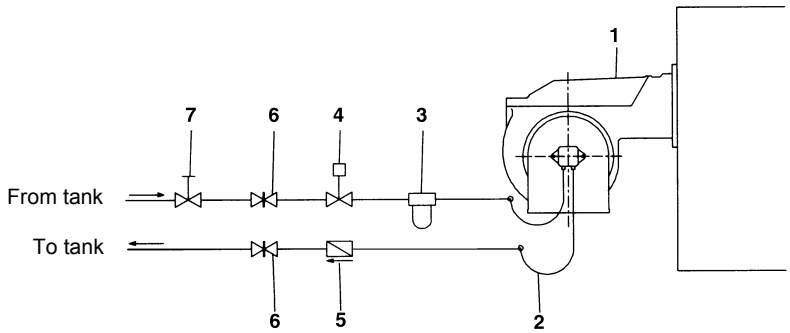

Fig. 8 - Double-pipe system

The burner is supplied with filter and flexible hoses, all the parts upstream the filter and downstream the return flexible hose, must be installed by the customer. As far as the hoses connection, see the related paragraph.

Key

1 Burner
2 Flexible hoses (fitted)
3 Light oil filter (fitted)
4 Automatic interceptor (*)
5 One-way valve (*)
6 Gate valve
7 Quick-closing gate-valve (outside the tank or boiler rooms)

(*) Only for installations with gravity, siphon or forced circulation feed systems. If the device installed is a solenoid valve, a timer must be installed to delay the valve closing.
The direct connection of the device without a timer may cause pump breaks.

The pumps that are used can be installed both into single-pipe and double-pipe systems.

Single-pipe system: a single pipe drives the oil from the tank to the pump's inlet. Then, from the pump, the pressurised oil is driven to the nozzle: a part comes out from the nozzle while the othe part goes back to the pump. In this system, the by-pass pulg, if provided, must be removed and the optional return port, on the pump's body, must be sealed by steel plug and washer.

Double-pipe system: as for the single pipe system, a pipe that connects the tank to the pump's inlet is used besides another pipe that connects the pum's return port to the tank, as well. The excess of oil goes back to the tank: this installation can be considered self-bleeding. If provided, the inside by-pass plug must be installed to avoid air and fuel passing through the pump.

Burners come out from the factory provided for double-stage systems. They can be suited for single-pipe system (recommended in the case of gravity feed) as decribed before.

The bypass plug inserted between the pressure-side and shaft seal is only intended to change the pump rotation, check the presence of this plug by means of a 4 mm Allen key in the pressure outlet of the pump.

Caution: changing the direction of pump rotation involves changing of all pump connections.

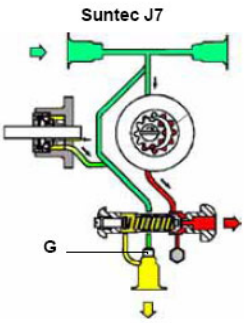

Bleed

Bleeding in two-pipe operation is automatic : it is assured by a bleed flat on the piston. In one-pipe operation, the plug of a pressure gauge port must be loosened until the air is evacuated from the system.

About the use of fuel pumps

- Make sure that the by-pass plug is not used in a single pipe installation, because the fuel unit will not function properly and damage to the pump and burner motor could result.
- Do not use fuel with additives to avoid the possible formation over time of compounds which may deposit between the gear teeth, thus obstructing them.
- After filling the tank, wait before starting the burner. This will give any suspended impurities time to deposit on the bottom of the tank, thus avoiding the possibility that they might be sucked into the pump.
- On initial commissioning a "dry" operation is foreseen for a considerable length of time (for example, when there is a long suction line to bleed). To avoid damages inject some lubrication oil into the vacuum inlet.
- Care must be taken when installing the pump not to force the pump shaft along its axis or laterally to avoid excessive wear on the joint, noise and overloading the gears.
- Pipes should not contain air pockets. Rapid attachment joint should therefore be avoided and threaded or mechanical seal junctions preferred. Junction threads, elbow joints and couplings should be sealed with removable sg component. The number of junctions should be kept to a minimum as they are a possible source of leakage.
- Do not use PTFE tape on the suction and return line pipes to avoid the possibility that particles enter circulation. These could deposit on the pump filter or the nozzle, reducing efficiency. Always use O-Rings or mechanical seal (copper or aluminium gaskets) junctions if possible.
- An external filter should always be installed in the suction line upstream of the fuel unit.

Light oil pumps

Suntec J6 - J7	
Oil viscosity	2.8 - 200 cSt
Oil temperature	0 - 90°C
Min. suction pressure	- 0,45 barto avoid gasing
Max. suction pressure	1.5 bar
Max. return pressure	1.5 bar
Rotation speed	3600 rpm max.

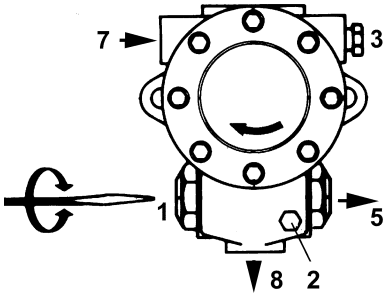

Key

1 Pressure governor
2 Pressure gauge
3 Vacuum gauge
5 Nozzle
7 Suction
8 Return

Connecting the oil flexible hoses to the pump

To connect the flexible oil hoses to the pump, proceed as follows, according to the pump provided:

1 remove the closing nuts A and R on the inlet and return connections of the pump;
2 screw the rotating nut of the two flexible hoses on the pump **being careful to avoid exchanging the lines**: see the arrows marked on the pump.

For further information, refer to the technical documentation of the pump.

.

Suntec J6-J7

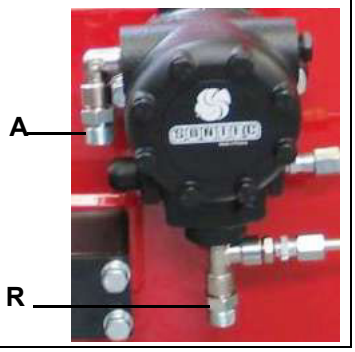

WARNING: (only for double stage and progressive burners) The burner is provided with an electrical bridge between terminals 6 and 7; when connecting the high/low flame thermostat, remove this bridge before connecting the thermostat.

ELECTRICAL CONNECTIONS

WARNING! Respect the basic safety rules. make sure of the connection to the earthing system. do not reverse the phase and neutral connections. fit a differential thermal magnet switch adequate for connection to the mains.

WARNING! before executing the electrical connections, pay attention to turn the plant's switch to OFF and be sure that the burner's main switch is in 0 position (OFF) too. Read carefully the chapter "WARNINGS", and the "Electrical connections" section.

ATTENTION: Connecting electrical supply wires to the burner teminal block MA, be sure that the ground wire is longer than phase and neutral ones.

3 To execute the electrical connections, proceed as follows:

1 remove the cover from the electrical board, unscrewing the fixing screws;

2 execute the electrical connections to the supply terminal board as shown in the attached wiring diagrams;

3 check the direction of the fan motor (see next paragraph);

4 refit the panel cover.

WARNING: (only for double stage and progressive burners) The burner is provided with an electrical bridge between terminals 6 and 7; when connecting the high/low flame thermostat, remove this bridge before connecting the thermostat.

Rotation of electric motor

Once the electrical connection of the burner is executed, remember to check the rotation of the electric motor. The motor should rotate according to the "arrow" symbol on the body. In the event of wrong rotation, reverse the three-phase supply and check again the rotation of the motor.

CAUTION: check the motor thermal cut-out adjustment

NOTE: the burners are supplied for three-phase 380 V or 400 V supply, and in the case of three-phase 220 V or 230 V supply it is necessary to modify the electrical connections into the terminal box of the electric motor and replace the overload tripped relay.

Note on elecrtical supply

In the case where the power supply of the AUXILIARIES of the phase-phase burner (without a neutral), for the flame detection it is necessary to connect the RC circuit Siemens between the terminal 2 (terminal X3-04-4 in case of LMV2x, LMV3x, LMV5x, LME7x) of the base and the earth terminal, RC466890660. For LMV5 control box, please refer to the clabeling recommendations avaible on the Siemens CD attached to the burner

Key

C - Capacitor (22 nF , 250 V)
LME / LMV - Siemens control box
R - Resistor (1MΩ)
M: Terminal 2 (LGB, LME), Terminal X3-04-4 (LMV2x, LMV3x, LMV5, LME7x)
RC466890660 - RC Siemens filter

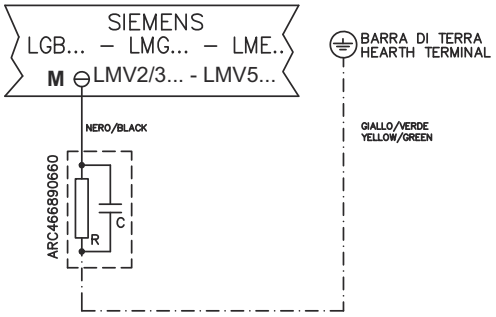

ADJUSTMENTS

⚠	***ATTENTION:*** **before starting the burner up, be sure that the manual cutoff valves are open. Be sure that the mains switch is closed.**
	Before starting up the burner, make sure that the return pipe to the tank is not obstructed. Any obstruction would cause the pump seal to break.
	.***ATTENTION:*** During commissioning operations, do not let the burner operate with insufficient air flow (danger of formation of carbon monoxide); if this should happen, make the fuel decrease slowly until the normal combustion values are achieved.

⚠	**IMPORTANT! the combustion air excess must be adjusted according to the in the following chart:**

Recommended combustion parameters		
Fuel	***Recommended (%) CO_2***	***Recommended (%) O_2***
Light oil	11.5 ÷ 13	2.9 ÷ 4.9

Adjusting the fuel flow rate

The fuel rate is setting choosing properly sized nozzles and adjusting the fuel pressure at the pump inlet (see the diagram Fig. 9). To choose the nozzles refer to tables below; for pump pressure regulation see next tables.

⚠	**Note: all pumps are set to 12 bar. The nozzle rate must be higher than the rate referred to the minimum burner output.**

Key

EV	Fuel solenoid valve
EVG1	Fuel solenoid valve - low flame
EVG2	Fuel solenoid valve - high flame
M	Manometer
P	Pump

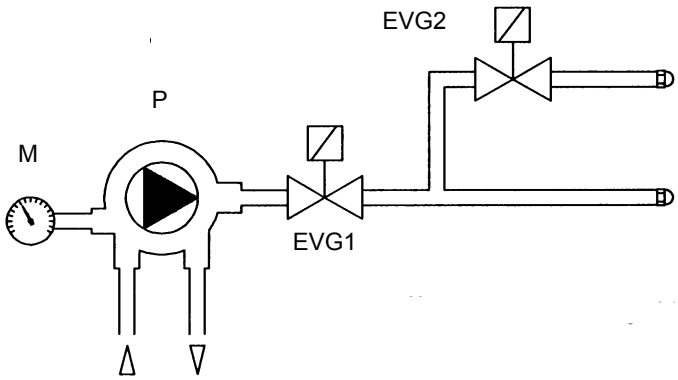

Fig. 9

Choosing the light oil nozzles

		OUTPUT	YECTOR		
kg/h	**kcal/h**	**kW**	**10 bar**	**12 bar**	**14 bar**
90	918.900	1068	14.00+9.50	13.00+8.00	12.00+8.00
95	969.950	1128	15.00+10.00	14.00+8.00	13.00+8.00
100	1.021.000	1187	16.00+10.00	15.00+9.00	13.00+9.00
105	1.072.050	1247	16.00+11.00	16.00+9.00	14.00+9.00
110	1.123.100	1306	17.00+12.00	16.00+10.00	14.00+10.00
115	1.174.150	1365	18.00+12.00	17.00+10.00	15.00+10.00
120	1.225.200	1425	19.00+12.00	17.00+11.00	16.00+10.00
125	1.276.250	1484	20.00+13.00	18.00+12.00	16.00+11.00
130	1.327.300	1543	21.00+13.00	19.00+12.00	17.00+12.00
135	1.378.350	1603	22.00+13.00	19.00+13.00	18.00+12.00
140	1.429.400	1662	24.00+13.00	20.00+13.00	19.00+12.00
145	1.480.450	1721	24.00+14.00	20.00+14.00	19.00+13.00
150	1.531.500	1781	25.00+14.00	22.00+14.00	19.00+14.00
155	1.582.550	1840	24.00+16.00	22.00+15.00	20.00+14.00
160	1.633.600	1900	26.00+16.00	22.00+16.00	20.00+15.00
165	1.684.650	1959	27.00+16.00	24.00+16.00	22.00+14.00
170	1.735.700	2018	28.00+16.00	24.00+17.00	22.00+15.00
175	1.786.750	2078	29.00+17.00	24.00+18.00	23.00+16.00
180	1.837.800	2137	30.00+17.00	26.00+17.00	24.00+16.00
185	1.888.850	2196	30.00+18.00	26.00+18.00	26.00+15.00
190	1.939.900	2256	30.00+20.00	26.00+19.00	26.00+16.00
195	1.990.950	2315	30.00+21.00	28.00+19.00	28.00+15.00
200	2.042.000	2374	30.00+22.00	28.00+20.00	28.00+16.00
205	2.093.050	2434	32.00+22.00	30.00+20.00	28.00+17.00
210	2.144.100	2493	32.00+24.00	32.00+19.00	28.00+18.00

Tab. 1

Oil nozzle flow rates

(G.P.H.)	PUMP PRESSURE (bar)										
	10	**11**	**12**	**13**	**14**	**15**	**16**	**17**	**18**	**19**	**20**
	(kg/h)										
9.50	36.09	37.85	39.53	41.14	42.70	44.20	45.65	47.05	48.41	49.74	51.03
10.50	39.88	41.83	43.69	45.48	47.19	48.85	50.45	52.00	53.51	54.98	56.41
12.00	45.58	47.81	49.93	51.97	53.93	55.83	57.66	59.43	61.16	62.83	64.46
13.80	52.42	54.98	57.42	59.77	62.02	64.20	66.31	68.35	70.33	72.26	74.13
15.30	58.12	60.95	63.66	66.26	68.77	71.18	73.51	75.78	77.97	80.11	82.19
16.00	60.78	63.74	66.58	69.30	71.91	74.44	76.88	79.24	81.54	83.77	85.95
17.00	64.57	67.73	70.74	73.63	76.41	79.09	81.68	84.20	86.64	89.01	91.32
18.00	68.37	71.71	74.90	77.96	80.90	83.74	86.49	89.15	91.73	94.25	96.69
19.00	72.17	75.69	79.06	82.29	85.40	88.39	91.29	94.10	96.83	99.48	102.07
20.00	75.97	79.68	83.22	86.62	89.89	93.04	96.10	99.05	101.93	104.72	107.44
22.00	83.57	87.65	91.54	95.28	98.88	102.35	105.71	108.96	112.12	115.19	118.18
24.00	91.16	95.61	99.87	103.94	107.87	111.65	115.32	118.86	122.31	125.66	128.93
26.00	98.76	103.58	108.19	112.61	116.86	120.96	124.92	128.77	132.50	136.13	139.67
28.00	106.36	111.55	116.51	121.27	125.85	130.26	134.53	138.67	142.70	146.61	150.41
30.00	113.96	119.52	124.83	129.93	134.83	139.57	144.14	148.58	152.89	157.08	161.16
32.00	121.55	127.49	133.15	138.59	143.82	148.87	153.75	158.49	163.08	167.55	171.90

Tab. 2

Prior to start up the burner, make sure that the return pipe to the tank is not obstructed. Any obstruction would cause the pump seal to break.

- Check that the combustion parameters are in the suggested limits.

Priming the pump and adjustments

1 remove the electric panel cover;

2 prime the oil pump, by means of the related contactor: check the motor rotation and keep pressed for some seconds until the oil circuit is charged bleed the air from the **M** pressure gauge port of the pump (see picture below), loosening the cap without removing it; then release the contactor;

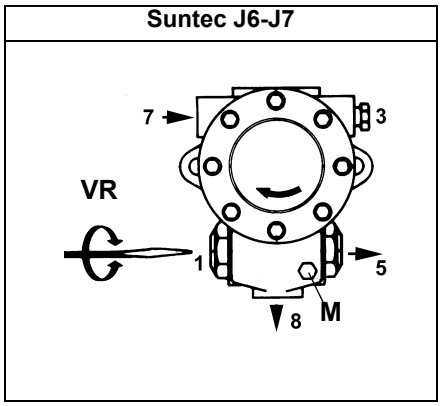

3 Remove the actuator cover.

4 Turn the burner on by means of its main switch **A** (Fig. 10): if the burner locks (LED **B** on in the control panel) press the RESET button (**C**) on the control panel (Fig. 10) - page 19;

5 start the burner up by means of the thermostat series and wait until the pre-purge time comes to an end;

6 Keep the burner to the low flame stage by disconnecting the **TAB** thermostat (remove the bricge between terminals 6 and 7).

7 Proceed as follows acting on the ST1 actuator cam to adjust the air flow rate in the low flame stage, checking the combustion values:

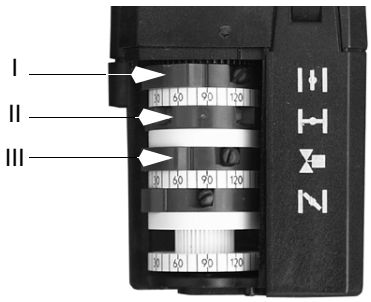

PG60: Berger STA4.5

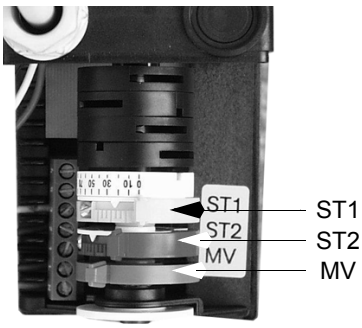

PG70 - PG81: Berger STA6

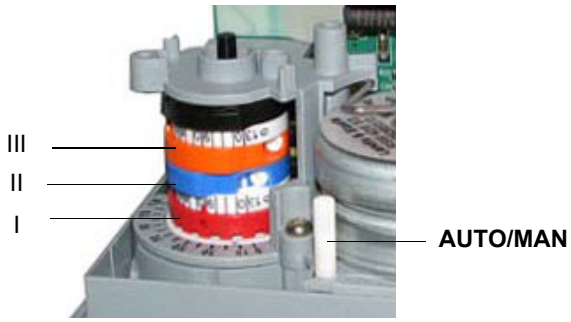

PG60 - PG70 - PG81: Siemens SQN72

Refer to the next table for cams functions.

	BERGER STA4.5	BERGER STA4.5	Siemens SQN72
”Air adjustment in high flame” cam	I	ST2	III
Air adjustment in low flame - Stand-by - Ignition cam	II	ST1	I
Auxiliary cam for the opening consent to the second fuel valve	III	MV	II

Berger STA4: this actuator is not provided with the manual control of the air damper. The adjustment of the cams is carried out by means of a screwdriver, by twisting the **VS** screw located inside the cam.

Berger STA6: this actuator is not provided with the manual control of the air damper. The adjustment of the cams is carried out by means of the cam lever

- Siemens SQN72: a key is provided to move cams I and IV, the other cams can be moved by means of screws. On the Siemens actuator the AUTO/MAN mode is provided (see picture).

9 by removing the bridge between the 6 and 7 terminals of the **TAB** thermostat , the actuator moves to the position (degrees) set for the ST1 cam (low flame cam);

10 to decrease the low flame position (and then decrease the opening angle of the actuator), move the cam to a lower position: the actuator will close to the new position of ST1;

11 to increase the low flame position, move the cam higher to the required position, make the bridge between the 6 and 7 terminals only for a while and then remove it immediately: the actuator will move for just few degrees towards the high flame, then it will move down to the new ST1 low flame position;

12 now, charge the oil ciruit of the second nozzle by pressing the P1 button (see next picture);

13 the 3rd cam drives the opening of the 2nd stage solenoid valve (EVG2) and must be set between the other two cams, however near to ST1;

14 The cycle goes on and il the thermostat **TAB** is connected, the control box drives the burner to high flame. If there is not theTAB thermostat, place a bridge between terminals 6 and 7 on the MA terminal block (see picture above).

15 By means of ST2 cam, adjust the air flow rate in high flame stage;

16 to increase the high flame position (and consequently to increase the degrees), move the cam to a higher position: the actuator will move to the new ST2 position;

17 to decrease the high flame position, move the cam to a lower position, remove the bridge between 6 and 7 terminals only for a while, then replace it: the actuator will shift just few degrees towards the low flame position and then will move to the new high flame position.

18 Once the adjustmet is performed, check again that the combustion parameters are in the set limits.

19 Replace the actuator cover.

Adjusting the combustion head

To let the burner operate at a lower output, turn clockwise the **VRT** screw and move progressively the combustion head back towards the MIN position.

.

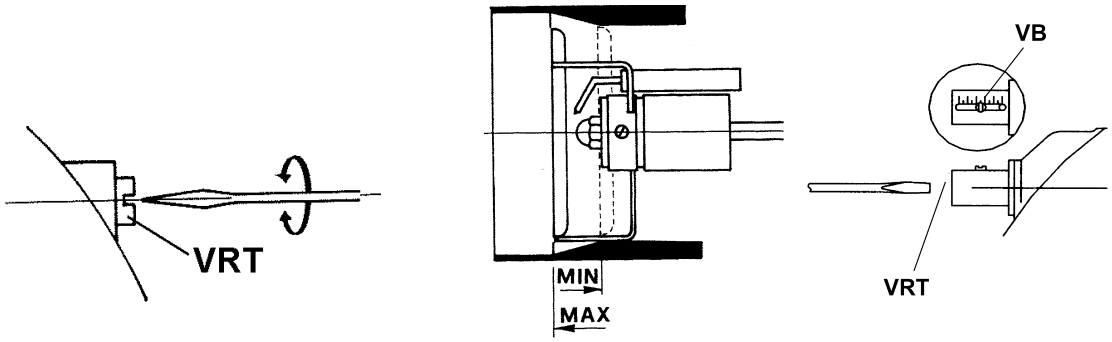

Note: loosen VB screw to free the VRT screw; adjust the head and then remember to fasten VB again.

Attention! if it is necessary to change the head position, repeat the air and gas adjustments described above.

Calibration of air pressure switch (when provided)

To calibrate the air pressure switch, proceed as follows:

- Remove the transparent plastic cap.
- Once air and gas setting have been accomplished, startup the burner.
- During the pre-purge phase o the operation, turn slowly the adjusting ring nut **VR** in the clockwise direction until the burner lockout, then read the value on the pressure switch scale and set it to a value reduced by 15%.
- Repeat the ignition cycle of the burner and check it runs properly.
- Refit the transparent plastic cover on the pressure switch.

PART II: OPERATION

LIMITATIONS OF USE

THE BURNER IS AN APPLIANCE DESIGNED AND CONSTRUCTED TO OPERATE ONLY AFTER BEING CORRECTLY CONNECTED TO A HEAT GENERATOR (E.G. BOILER, HOT AIR GENERATOR, FURNACE, ETC.), ANY OTHER USE IS TO BE CONSIDERED IMPROPER AND THEREFORE DANGEROUS.

THE USER MUST GUARANTEE THE CORRECT FITTING OF THE APPLIANCE, ENTRUSTING THE INSTALLATION OF IT TO QUALIFIED PERSONNEL AND HAVING THE FIRST COMMISSIONING OF IT CARRIED OUT BY A SERVICE CENTRE AUTHORISED BY THE COMPANY MANUFACTURING THE BURNER.

A FUNDAMENTAL FACTOR IN THIS RESPECT IS THE ELECTRICAL CONNECTION TO THE GENERATOR'S CONTROL AND SAFETY UNITS (CONTROL THERMOSTAT, SAFETY, ETC.) WHICH GUARANTEES CORRECT AND SAFE FUNCTIONING OF THE BURNER.

THEREFORE, ANY OPERATION OF THE APPLIANCE MUST BE PREVENTED WHICH DEPARTS FROM THE INSTALLATION OPERATIONS OR WHICH HAPPENS AFTER TOTAL OR PARTIAL TAMPERING WITH THESE (E.G. DISCONNECTION, EVEN PARTIAL, OF THE ELECTRICAL LEADS, OPENING THE GENERATOR DOOR, DISMANTLING OF PART OF THE BURNER).

NEVER OPEN OR DISMANTLE ANY COMPONENT OF THE MACHINE.

OPERATE ONLY THE MAIN SWITCH, WHICH THROUGH ITS EASY ACCESSIBILITY AND RAPIDITY OF OPERATION ALSO FUNCTIONS AS AN EMERGENCY SWITCH, AND ON THE RESET BUTTON.

IN CASE OF A BURNER SHUT-DOWN, RESET THE CONTROL BOX BY MEANS OF THE RESET PUSHBUTTON. IF A SECOND SHUT-DOWN TAKES PLACE, CALL THE TECHNICAL SERVICE, WITHOUT TRYING TO RESET FURTHER.

WARNING: DURING NORMAL OPERATION THE PARTS OF THE BURNER NEAREST TO THE GENERATOR (COUPLING FLANGE) CAN BECOME VERY HOT, AVOID TOUCHING THEM SO AS NOT TO GET BURNT.

OPERATION

⚠	***ATTENTION:*** **before starting the burner up, be sure that the manual cutoff valves are open. Be sure themains switch is closed. Read carefully th "Warnings" chapter.**

- Turn the switch A on the burner control panel to the ON position.
- Check the control box is not locked (LED B on), in this case press the reset button accessible from the upper side of the electrical board (see next picture) or the pushbutton C on the frontal panel of the electrical board.
- Check the thermostats (or pressure switches) enable the burner to operate.
- The burner start up cycle begins: the contrl box activates the burner fan and meanwhile the ignition transformer (signalled by the light H on the front panel); pre-purgephase lasts some seconds according to the control box type provided with the burner.
- At the end of pre-purgue time, the first stage solenoid valve EV1 is energised, indicated by the LED D on the display panel and the burner lights.
- The ignition transformer remains on for some seconds after the flame is lit (post ignition time), after this time it is cut out and the light H tunrs off.
- The burner is on in the low flame stage (led G on); after 5 - 15 sec. (according to the control box type), it goes into the two-stage mode and turns automatically to high flame or remains in low flame, according to the system demands. High or low flame operation is shown by the light F (high flame) or light G (low flame). The light E is on when the solenoid valve of the high flame is open, feeding the nozzle of the second stage.

Burner control panel

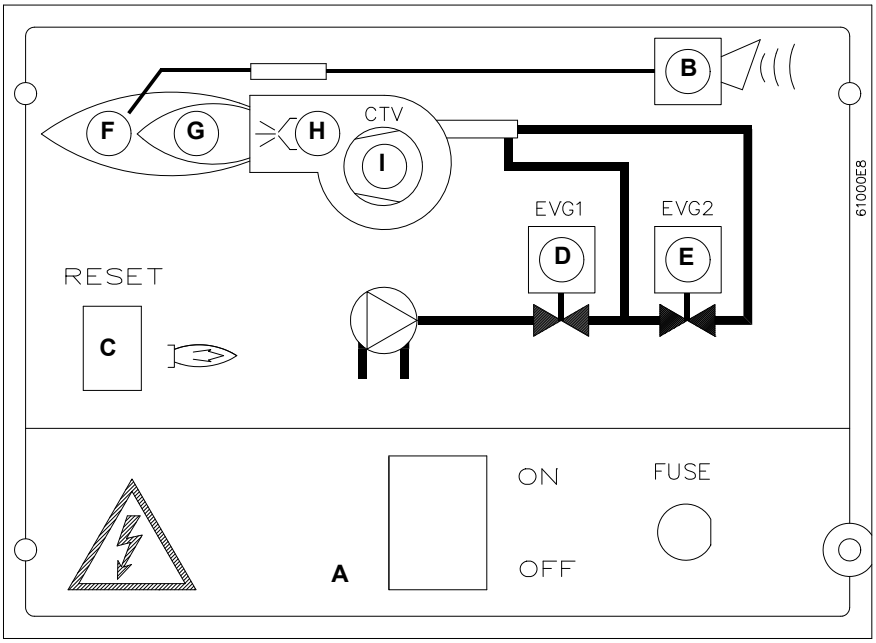

Fig. 10

Keys

A Main switch
B Burner lockout light
C Reset button for flame control device (only burners fitted with remote reset for flame control device)
D Signalling light of the opening of 1st stage solenoid valve
E Signalling light of the opening of 2nd stage solenoid valve
F High flame operation signalling light
G Low flame operation signalling light
H Ignition transformer in operation signalling light
I Overload tripped signalling light (PG30 excluded)

PART III: MAINTENANCE

At least once a year carry out the maintenance operations listed below. In the case of seasonal servicing, it is recommended to carry out the maintenance at the end of each heating season; in the case of continuous operation the maintenance is carried out every 6 months.

WARNING: ALL OPERATIONS ON THE BURNER MUST BE CARRIED OUT WITH THE MAINS DISCONNECTED AND THE FUEL MANAUL CUTOFF VALVES CLOSED!

ATTENTION: READ CAREFULLY THE "WARNINGS" CHAPTER AT THE BEGINNIG OF THIS MANUAL.

ROUTINE MAINTENANCE

- Check and clean the cartdrige of the fuel filter, replace it if necessary (see next paragraph);
- carefully check the fuel flexible hoses for leaks;
- check and clean the filter on the fuel pump: bilter must be thoroughly cleaned at least once in a season to ensure correct working of the fuel unit. To remove the filter, unscrew the four screws on the cover. When reassemble, make sure that the filter is mounted with the feet toward the pump body. If the gasket between cover and pump housing should be damaged, it must be replaced;
- remove, check and clean the combustion head (page 32); when reassembling, carefully observe the measures on page 21;
- check the ignition electrodes and their ceramic insulators, clean, adjust and replace if necessary page 33;
- remove and clean the oil nozzles (IMPORTANT: do not clean the nozzles using metallic or sharp utensils, use only solvents or steam); at the end of maintenance operations, refit the burner, turn it on and check the combustion. If in doubt, replace the defective nozzle/s. In case of intensive use of the burner, the nozzles must be replaced at the end of the working season;
- check and carefully clean the flame detection photoresistor, if necessary replace it and, if in doubt, check the detection current following the scheme in Fig. 30;
- clean and grease levers and rotating parts.

Thecnical procedure of self cleaning filters substitution (valid for all models)

1 Close the bowl valve before the self cleaning filter
2 Switch off any electrical equipment on board on the filter (example motorization or heaters)

WARNING! Drain the system by unscrewing the drain screw on the bottom of the self cleaning filter

3 Disconnect the outlet pipe from the cover of the self cleaning filter
4 Remove the cover with all the filter pack, leaving only the bowl on the line
5 Clean any residue on the bottom of the bowl and clean the seat of the O-ring seal

WARNING! Replace the O-ring seal between the bowl and cover

6 Insert the filter pack again making sure to respect the correct inlet/outlet direction or any references on the cover and tray
7 Replace the filter by following the reverse order operations
8 Make sure there is no leakage and give the power to any electrical equipmente on the filter

Removing the combustion head and the oil gun

1 Remove the top cover **C**;
2 remove the photoresistor from its seat;
3 unscrew the revolving connectors (**E** in figure) on the fuel pipes (use 2 spanners to avoid loosening the connections attached to the distributor block);
4 loosen **VRT** screw to free the threaded rod **AR**, then screw out the 2 screws **V** holding the washer **R** and the screw **VRT** again;
5 remove the whole assembly as shown in figure;
6 clean the combustion head and the oil gun by means of a vacuum cleaner; to scrape off the scale use a metallic brush.

Note: to replace the combustion head reverse the procedure described above.

Correct position of electrodes and combustion head

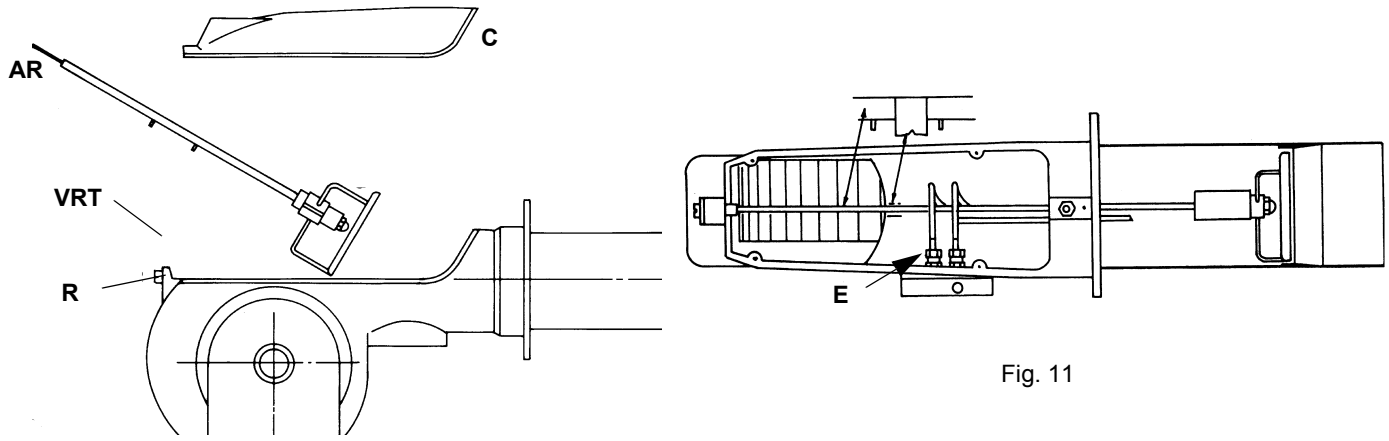

Fig. 11

⚠	**ATTENTION:** avoid the electrodes to get in touch with metallic parts (blast tube, head, etc.), otherwise the boiler operation would be compromised. Check the electrodes position after any intervention on the combustion head.

To guarantee a good ignition the measures showed on the next picture Fig. 12 must be observed.
Be sure to tight the screw on the electrodes group before reassembling the combustion head.

A 9 ÷ 11 mm
B 3.5 ÷ 4.5 mm
C 8 mm
D 3 mm

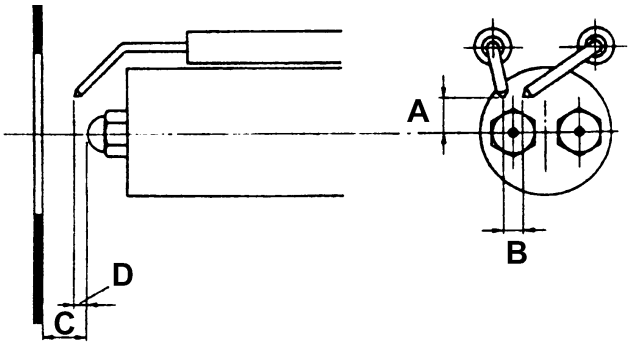

Fig. 12

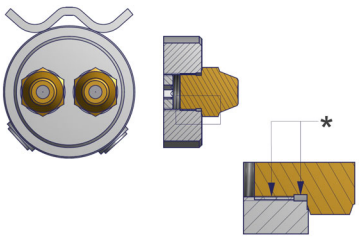

Replacing the ignition electrodes

⚠	**ATTENTION:** avoid the electrodes to get in touch with metallic parts (blast tube, head, etc.), otherwise the boiler operation would be compromised. Check the electrodes position after any intervention on the combustion head.

To replace the ignition electrodes, proceed as follows:

1 remove the burner cover;
2 disconnect the electrodes cables;
3 remove the combustion head (see par. “Removing the combustion head”);
4 loose screw that fasten the ignition electrodes;
5 remove the electrodes and replace them, referring to the values quoted on Fig. 12.

Cleaning and replacing the detection photoresistor

To clean/replace the photoresistor, proceed as follows:

1 disconnect the system from the electrical power supply;
2 shut off the fuel supply;
3 remove the photoresistor from its slot;
4 clean it using a clean cloth; do not use any burner cleansing sprays;
5 if necessary, replace it;
6 insert the photoresistor into its slot.

Checking the detection current

To measure the detection signal follow the diagram on the next picture.
If the signal is not in the advised range, check the electrical contacts, the cleaning of the combustion head, the position of the photoresistor and if necessary replace it.

Control box	Flame sensor	Minimum detection signal
LMO44	QRB4	45μA
LAL2..	QRB1	95μA

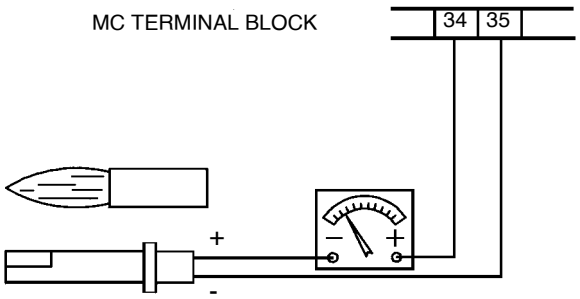

Fig. 13

Fig. 14

Seasonal stop

To stop the burner in the seasonal stop, proceed as follows:

1 turn the burner main switch to 0 (Off position)
2 disconnect the power mains
3 close the fuel valve of the supply line

Burner disposal

In case of disposal, follow the instructions according to the laws in force in your country about the “Disposal of materials”.

TROUBLESHOOTING

	THE BURNER DOESN'T START	THE BURNER REPEATS PRE-PURGE	NOISY FUEL PUMP	THE BURNER DOESN'T START AND STOPS	THE BURNER STARTS AND STOPS	THE BURNER DOESN'T SWITCH TO HIGH FLAME	THE BURNER STOPS DURING OPERATION	THE BURNER STOPS AND REPEATS THE CYCLE DURING OPE-RATION
MAIN SWITCH OPEN	●							
LINE FUSE INTERVENTION	●							
MAX. PRESSURE SWITCH FAULT	●							●
FAN THERMAL CUTOUT INTERVENTION	●							
AUXILIARY RELAIS FUSES INTERVENTION	●							
CONTROL BOX FAULT	●	●		●	●		●	
SERVOCONTROL FAULT						●		
SMOKEY FLAME					●		●	
IGNITION TRANSFORMER FAULT				●				
IGNITION ELECTRODE DIRTY OR WRONG POSITIONED				●				
DIRTY NOZZLE				●			●	
FUEL SOLENOID VALVE DEFECTIVE				●			●	
PHOTORESISTOR DIRTY OR DEFECTIVE					●		●	
HI-LO FLAME THERMOSTAT DEFECTIVE						●		
WRONG POSITION OF SERVOCONTROL CAMS						●		
FUEL PRESSURE TOO LOW				●				
DIRTY FUEL FILTERS			●	●			●	

WIRING DIAGRAMS

Refer to the attached wiring diagrams.

WARNING

1 - Electrical supply 230V 50Hz 1 a.c./400V 50Hz 3N a.c.

2 - Do not reverse phase with neutral

3 - Ensure burner is properly earthed

BURNER EXPLODED VIEW

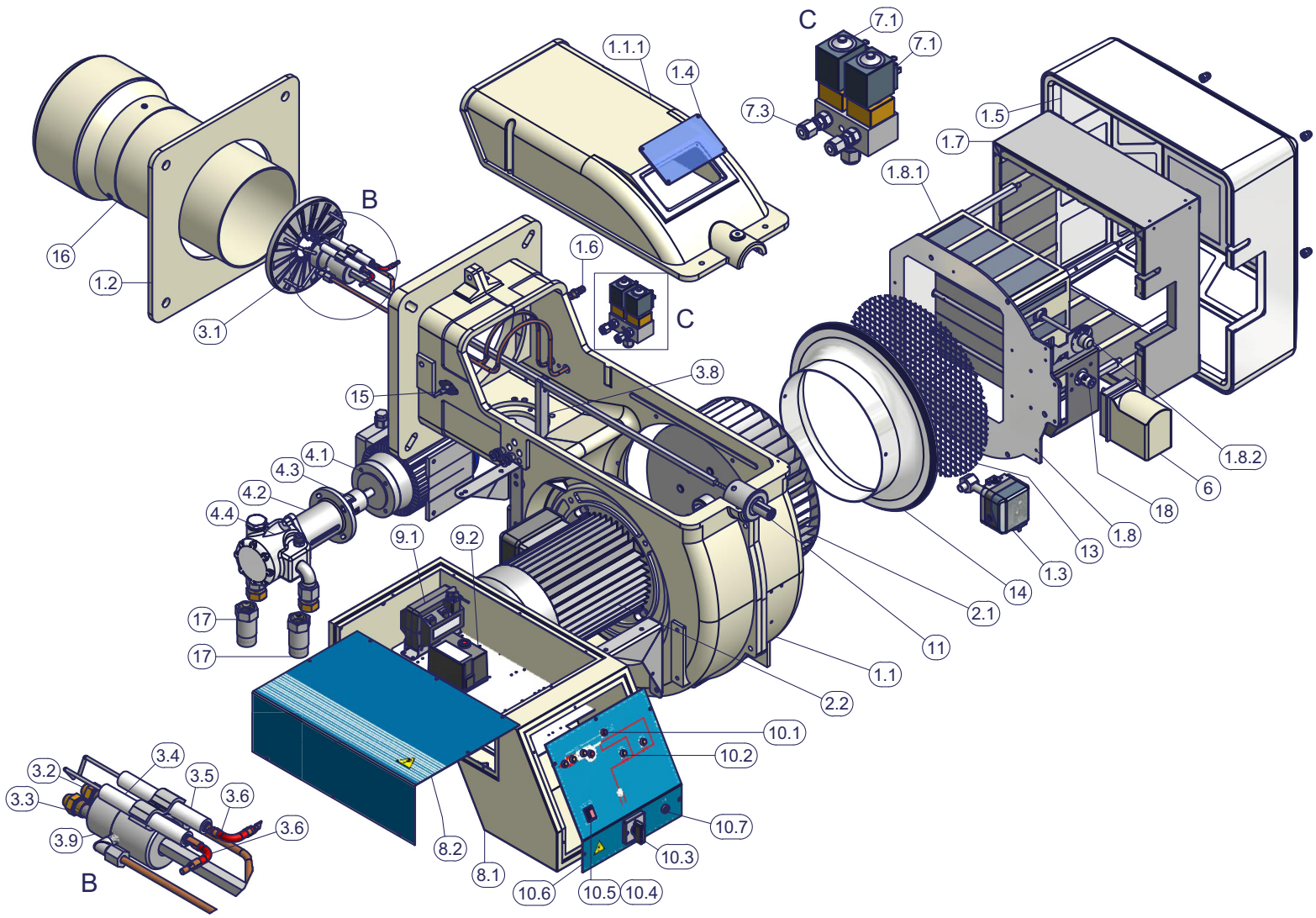

BURNER EXPLODED VIEW

POS.	DESCRIPTION	POS.	DESCRIPTION
1.1	BURNER HOUSING	4.3	COUPLING
1.1.1	COVER	4.4	PUMP
1.2	GENERATOR GASKET	6	ACTUATOR
1.3	AIR PRESSURE SWITCH	7.1	SOLENOID VALVE
1.4	INSPECTION GLASS	7.3	STRAIGHT UNION
1.5	SILENCER	8.1	BOARD
1.6	INLET	8.2	COVER
1.7	SILENCER	9.1	IGNITION TRANSFORMER
1.8	AIR INTAKE DAMPER	9.2	CONTROL BOX
1.8.1	AIR DAMPER SILENCER	10.1	LIGHT
1.8.2	AIR DAMPER INDEX	10.2	LIGHT
2.1	FAN WHEEL	10.3	SWITCH
2.2	MOTOR	10.4	LOCK-OUT RESET BUTTON
3.1	COMBUSTION HEAD	10.5	PROTECTION
3.2	NOZZLE	10.6	FRONT CONTROL PANEL
3.3	NOZZLE	10.7	FUSE
3.4	IGNITION ELECTRODE	11	COMBUSTION HEAD ADJUSTING SCREW
3.5	IGNITION ELECTRODE	13	NET
3.6	IGNITION CABLE	14	AIR INLET CONE
3.9	NOZZLE HOLDER	15	PHOTORESISTOR
3.8	HEAD SUPPORT	16	EXTENDED BLAST TUBE
4	MOTOR-PUMP ASS.Y	17	FLEXIBLE HOSE
4.1	MOTOR	18	COUPLING
4.2	BRACKET		

C.I.B. UNIGAS S.p.A.
Via L.Galvani, 9 - 35011 Campodarsego (PD) - ITALY
Tel. +39 049 9200944 - Fax +39 049 9200945/9201269
web site: www.cibunigas.it - e-mail: cibunigas@cibunigas.it

Note: specifications and data subject to change. Errors and omissions excepted.

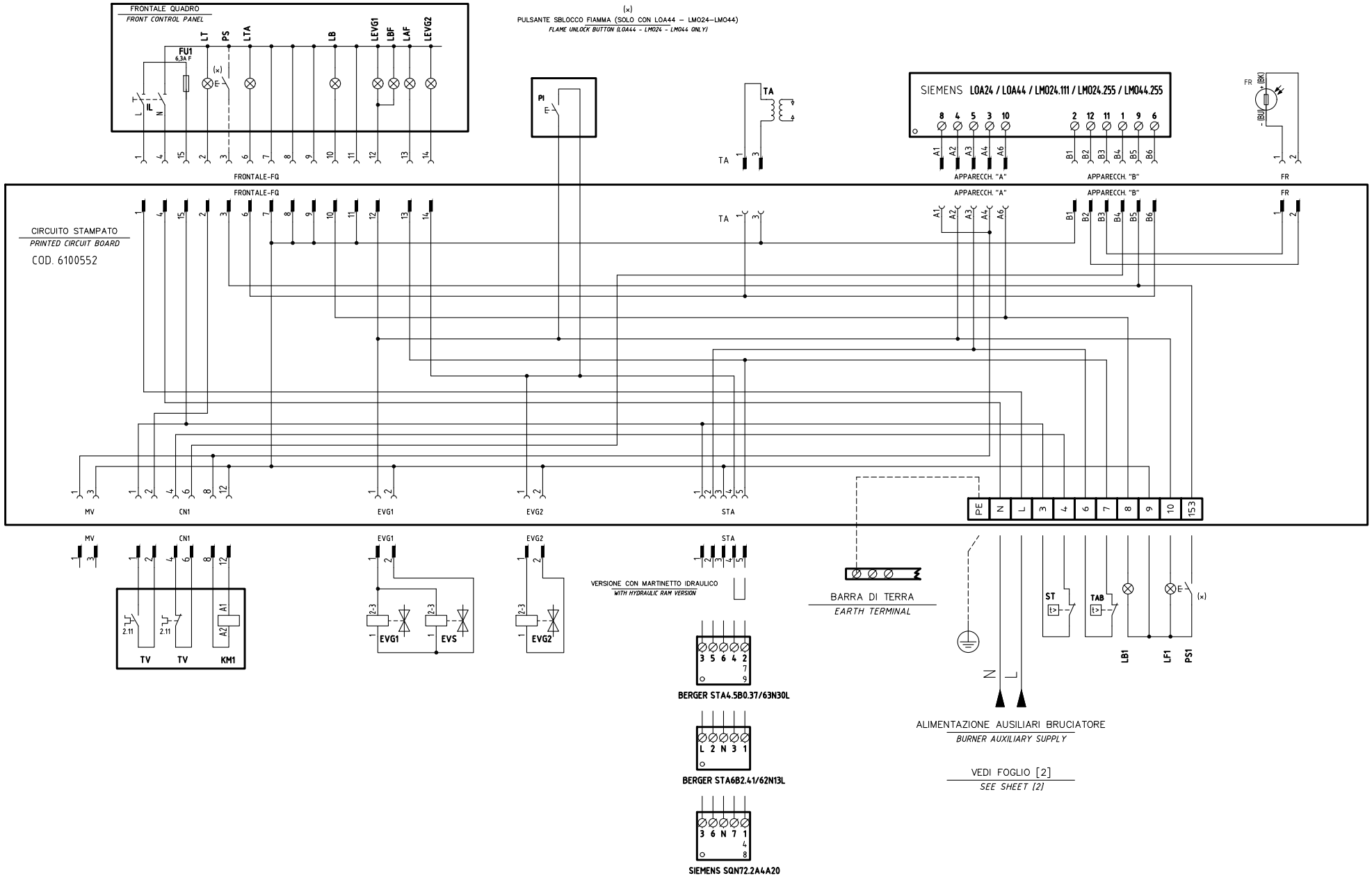

REV.	MODIFICA	DATA	FIRME
04	AGGIUNTO/ADDED "EVS"	22/02/13	U. PINTON
03	AGGIUNTO/ADDED LMO24.255	07/01/13	U. PINTON
02	AGGIUNTO/ADDED SQN72...	22/05/09	U. PINTON
01	EARTH TERMINAL ADDED	10/12/07	U. PINTON

UNIGAS

Impianto
TIPI/TYPES PG60/PG70/PG81/PG90/PG91
MODELLO G–.AB.x.xx.A.(M)

Descrizione

Ordine

Commessa

Esecutore: U. PINTON

Data Controllato: 06/08/2014

Controllato: E. CAVALLI

Data: 10/12/2007

Revisione: 04

Dis. N.: 18 – 141

PREC.: /

FOGLIO: 1

SEGUE: 2

TOTALE: 2

SIGLA/ITEM	DESCRZIONE	DESCRIPTION
BERGER STA4.5B0.37/63N30L	SERVOCOMANDO SERRANDA ARIA	AIR DAMPER ACTUATOR
BERGER STA6B2.41/62N13L	SERVOCOMANDO SERRANDA ARIA (ALTERNATIVO)	AIR DAMPER ACTUATOR (ALTERNATIVE)
EVG1	ELETTROVALVOLA GASOLIO I° STADIO	LIGHT OIL SOLENOID -VALVE - 1st STAGE
EVG2	ELETTROVALVOLA GASOLIO II° STADIO	LIGHT OIL SOLENOID VALVE - 2nd STAGE
EVS	ELETTROVALVOLA GASOLIO DI SICUREZZA	SAFETY LIGHT OIL SOLENOID VALVE
FR	FOTORESISTENZA RILEVAZIONE FIAMMA	PHOTORESISTOR FLAME DETECTOR
FU1	FUSIBILE DI LINEA	LINE FUSE
FU3	FUSIBILI LINEA MOTORE VENTILATORE	FAN MOTOR LINE FUSES
FU4	FUSIBILE DI LINEA	LINE FUSE
IB	INTERRUTTORE LINEA BRUCIATORE	BURNER LINE SWITCH
IG	INTERRUTTORE GENERALE	MAINS SWITCH
IL	INTERRUTTORE LINEA AUSILIARI	AUXILIARY LINE SWITCH
KM1	CONTATTORE MOTORE VENTILATORE	FAN MOTOR CONTACTOR
LAF	LAMPADA SEGNALAZIONE ALTA FIAMMA BRUCIATORE	BURNER IN HIGH FLAME INDICATOR LIGHT
LB	LAMPADA SEGNALAZIONE BLOCCO BRUCIATORE	INDICATOR LIGHT FOR BURNER LOCK-OUT
LB1	LAMPADA SEGNALAZIONE BLOCCO BRUCIATORE	INDICATOR LIGHT FOR BURNER LOCK-OUT
LBF	LAMPADA SEGNALAZIONE BASSA FIAMMA BRUCIATORE	BURNER IN LOW FLAME INDICATOR LIGHT

SIGLA/ITEM	DESCRIZIONE	DESCRIPTION
LEVG1	LAMPADA SEGNALAZIONE APERTURA [EVG1]	INDICATOR LIGHT FOR OPENING OF ELECTRO-VALVE [EVG1]
LEVG2	LAMPADA SEGNALAZIONE APERTURA [EVG2]	INDICATOR LIGHT FOR OPENING OF ELECTRO-VALVE [EVG2]
LF1	LAMPADA SEGNALAZIONE FUNZIONAMENTO BRUCIATORE	INDICATOR LIGHT BURNER OPERATION
LOA.. / LMO..	APPARECCHIATURA CONTROLLO FIAMMA	CONTROL BOX
LT	LAMPADA SEGNALAZIONE BLOCCO TERMICO	INDICATOR LIGHT FOR MOTOR OVERLOAD THERMAL CUTOUT
LTA	LAMPADA SEGNALAZIONE TRASFORMATORE DI ACCENSIONE	IGNITION TRANSFORMER INDICATOR LIGHT
MV	MOTORE VENTILATORE	FAN MOTOR
PI	PULSANTE INNESCO SECONDO STADIO BRUCIATORE	II° STAGE BURNER START BUTTON
PS	PULSANTE SBLOCCO FIAMMA	FLAME UNLOCK BUTTON
PS1	PULSANTE SBLOCCO FIAMMA	FLAME UNLOCK BUTTON
SIEMENS SQN72.2A4A20	SERVOCOMANDO SERRANDA ARIA	AIR DAMPER ACTUATOR
ST	SERIE TERMOSTATI/PRESSOSTATI	SERIES OF THERMOSTATS OR PRESSURE SWITCHES
TA	TRASFORMATORE DI ACCENSIONE	IGNITION TRANSFORMER
TAB	TERMOSTATO/PRESSOSTATO ALTA-BASSA FIAMMA	HIGH-LOW THERMOSTAT/PRESSURE SWITCHES
TS	TERMOSTATO/PRESSOSTATO DI SICUREZZA	SAFETY THERMOSTAT OR PRESSURE SWITCH
TV	TERMICO MOTORE VENTILATORE	FAN MOTOR THERMAL

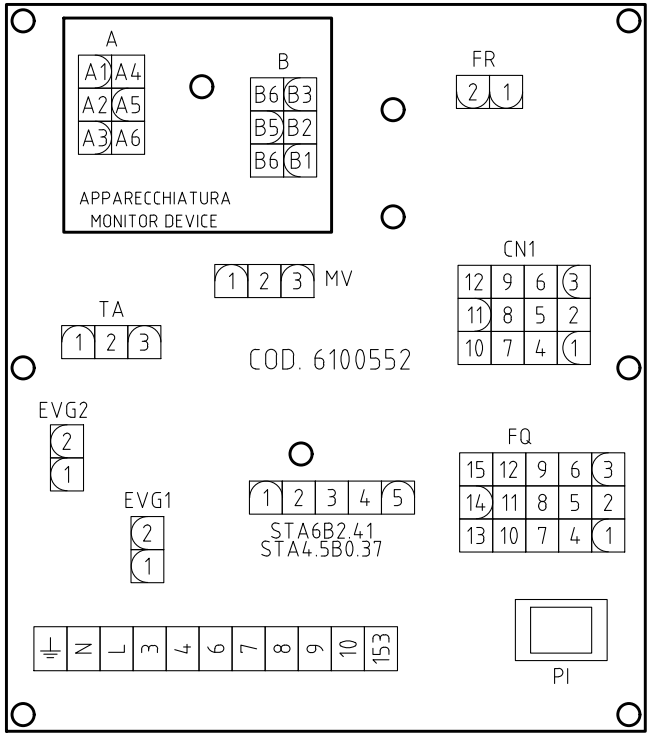

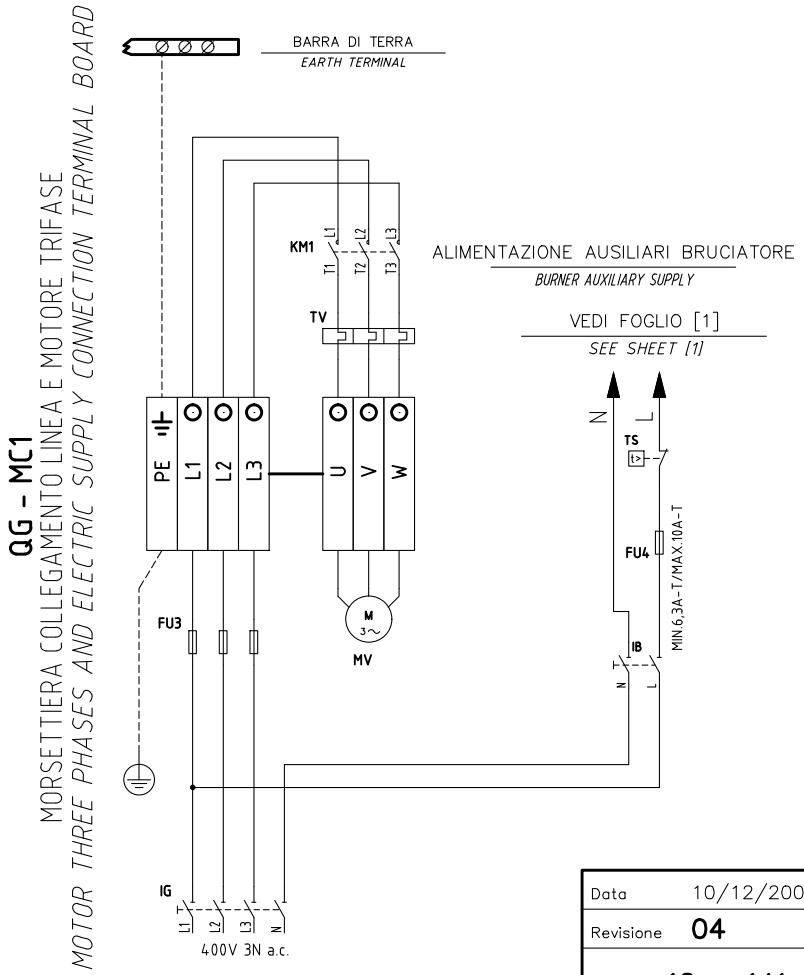

QG - MC1

MORSETTIERA COLLEGAMENTO LINEA E MOTORE TRIFASE

MOTOR THREE PHASES AND ELECTRIC SUPPLY CONNECTION TERMINAL BOARD

SERVOCOMANDO SERRANDA ARIA
AIR DAMPER ACTUATOR
STA4.5B0.37/037/63N30L

I	ALTA FIAMMA *HIGH FLAME*
II	SOSTA, ACCENSIONE E BASSA FIAMMA *STAND-BY, IGNITION AND LOW FLAME*
III	APERTURA EVG2 *OPEN EVG2*

SERVOCOMANDO SERRANDA ARIA (ALTERNATIVO)
AIR DAMPER ACTUATOR (ALTERNATIVE)
STA6B2.41/62N13L

ST2	ALTA FIAMMA *HIGH FLAME*
ST1	SOSTA, ACCENSIONE E BASSA FIAMMA *STAND-BY, IGNITION AND LOW FLAME*
MV	APERTURA EVG2 *OPEN EVG2*

SERVOCOMANDO SERRANDA ARIA (ALTERNATIVO)
AIR DAMPER ACTUATOR (ALTERNATIVE)
SQN72.2.A4A20

I (ROSSO) *I (RED)*	ALTA FIAMMA *HIGH FLAME*
II (BLU) *II (BLUE)*	SOSTA, ACCENSIONE E BASSA FIAMMA *STAND-BY, IGNITION AND LOW FLAME*
IV (NERO) *IV (BLACK)*	APERTURA EVG2 *OPEN EVG2*

Data	10/12/2007	PREC.	FOGLIO
Revisione	04	1	2
Dis. N.	18 – 141	SEGUE	TOTALE
		/	2