RN510 - RN515
RN520 - RN525

Progressive, Fully-modulating

Heavy oil Burners

MANUAL OF INSTALLATION - USE - MAINTENANCE

CIB UNIGAS

BURNERS - BRUCIATORI - BRULERS - BRENNER - QUEMADORES - ГОРЕЛКИ

M039215CB REL. 1.7 11/2023
M12923CA Rel. 0.7 03/2016

DANGERS, WARNINGS AND NOTES OF CAUTION

THIS MANUAL IS SUPPLIED AS AN INTEGRAL AND ESSENTIAL PART OF THE PRODUCT AND MUST BE DELIVERED TO THE USER.

INFORMATION INCLUDED IN THIS SECTION ARE DEDICATED BOTH TO THE USER AND TO PERSONNEL FOLLOWING PRODUCT INSTALLATION AND MAINTENANCE.

THE USER WILL FIND FURTHER INFORMATION ABOUT OPERATING AND USE RESTRICTIONS, IN THE SECOND SECTION OF THIS MANUAL. WE HIGHLY RECOMMEND TO READ IT.

CAREFULLY KEEP THIS MANUAL FOR FUTURE REFERENCE.

1) GENERAL INTRODUCTION

- The equipment must be installed in compliance with the regulations in force, following the manufacturer's instructions, by qualified personnel.
- Qualified personnel means those having technical knowledge in the field of components for civil or industrial heating systems, sanitary hot water generation and particularly service centres authorised by the manufacturer.
- Improper installation may cause injury to people and animals, or damage to property, for which the manufacturer cannot be held liable.
- Remove all packaging material and inspect the equipment for integrity.

In case of any doubt, do not use the unit - contact the supplier.

The packaging materials (wooden crate, nails, fastening devices, plastic bags, foamed polystyrene, etc), should not be left within the reach of children, as they may prove harmful.

- Before any cleaning or servicing operation, disconnect the unit from the mains by turning the master switch OFF, and/or through the cut-out devices that are provided.
- Make sure that inlet or exhaust grilles are unobstructed.
- In case of breakdown and/or defective unit operation, disconnect the unit. Make no attempt to repair the unit or take any direct action.

Contact qualified personnel only.

Units shall be repaired exclusively by a servicing centre, duly authorised by the manufacturer, with original spare parts and accessories.

Failure to comply with the above instructions is likely to impair the unit's safety.

To ensure equipment efficiency and proper operation, it is essential that maintenance operations are performed by qualified personnel at regular intervals, following the manufacturer's instructions.

- When a decision is made to discontinue the use of the equipment, those parts likely to constitute sources of danger shall be made harmless.
- In case the equipment is to be sold or transferred to another user, or in case the original user should move and leave the unit behind, make sure that these instructions accompany the equipment at all times so that they can be consulted by the new owner and/or the installer.
- This unit shall be employed exclusively for the use for which it is meant. Any other use shall be considered as improper and, therefore, dangerous.

The manufacturer shall not be held liable, by agreement or otherwise, for damages resulting from improper installation, use and failure to comply with the instructions supplied by the manufacturer.The occurrence of any of the following circustances may cause explosions, polluting unburnt gases (example: carbon monoxide CO), burns, serious harm to people, animals and things:

- Failure to comply with one of the WARNINGS in this chapter
- Incorrect handling, installation, adjustment or maintenance of the burner
- Incorrect use of the burner or incorrect use of its parts or optional supply

2) SPECIAL INSTRUCTIONS FOR BURNERS

- The burner should be installed in a suitable room, with ventilation openings complying with the requirements of the regulations in force, and sufficient for good combustion.
- Only burners designed according to the regulations in force should be used.
- This burner should be employed exclusively for the use for which it was designed.
- Before connecting the burner, make sure that the unit rating is the same as delivery mains (electricity, gas oil, or other fuel).
- Observe caution with hot burner components. These are, usually, near to the flame and the fuel pre-heating system, they become hot during the unit operation and will remain hot for some time after the burner has stopped.

When the decision is made to discontinue the use of the burner, the user shall have qualified personnel carry out the following operations:

a Remove the power supply by disconnecting the power cord from the mains.

b Disconnect the fuel supply by means of the hand-operated shut-off valve and remove the control handwheels from their spindles.

Special warnings

- Make sure that the burner has, on installation, been firmly secured to the appliance, so that the flame is generated inside the appliance fire-box.
- Before the burner is started and, thereafter, at least once a year, have qualified personnel perform the following operations:

a set the burner fuel flow rate depending on the heat input of the appliance;

b set the flow rate of the combustion-supporting air to obtain a combustion efficiency level at least equal to the lower level required by the regulations in force;

c check the unit operation for proper combustion, to avoid any harmful or polluting unburnt gases in excess of the limits permitted by the regulations in force;

d make sure that control and safety devices are operating properly;

e make sure that exhaust ducts intended to discharge the products of combustion are operating properly;

f on completion of setting and adjustment operations, make sure that all mechanical locking devices of controls have been duly tightened;

g make sure that a copy of the burner use and maintenance instructions is available in the boiler room.

- In case of a burner shut-down, reser the control box by means of the RESET pushbutton. If a second shut-down takes place, call the Technical Service, **without trying to RESET further**.
- The unit shall be operated and serviced by qualified personnel only, in compliance with the regulations in force.

3) GENERAL INSTRUCTIONS DEPENDING ON FUEL USED

3a) ELECTRICAL CONNECTION

- For safety reasons the unit must be efficiently earthed and installed as required by current safety regulations.
- It is vital that all saftey requirements are met. In case of any doubt, ask for an accurate inspection of electrics by qualified personnel, since the manufacturer cannot be held liable for damages that may be caused by failure to correctly earth the equipment.
- Qualified personnel must inspect the system to make sure that it is adequate to take the maximum power used by the equipment shown on the equipment rating plate. In particular, make sure that the system cable cross section is adequate for the power absorbed by the unit.
- No adaptors, multiple outlet sockets and/or extension cables are permitted to connect the unit to the electric mains.
- An omnipolar switch shall be provided for connection to mains, as required by the current safety regulations.
- The use of any power-operated component implies observance of a few basic rules, for example:
  - do not touch the unit with wet or damp parts of the body and/or with bare feet;
  - do not pull electric cables;
  - do not leave the equipment exposed to weather (rain, sun, etc.) unless expressly required to do so;
  - do not allow children or inexperienced persons to use equipment;
- The unit input cable shall not be replaced by the user.
  In case of damage to the cable, switch off the unit and contact qualified personnel to replace.
  When the unit is out of use for some time the electric switch supplying all the power-driven components in the system (i.e. pumps, burner, etc.) should be switched off.

3b) FIRING WITH GAS, LIGHT OIL OR OTHER FUELS

GENERAL

- The burner shall be installed by qualified personnel and in compliance with regulations and provisions in force; wrong installation can cause injuries to people and animals, or damage to property, for which the manufacturer cannot be held liable.
- Before installation, it is recommended that all the fuel supply system pipes be carefully cleaned inside, to remove foreign matter that might impair the burner operation.
- Before the burner is commissioned, qualified personnel should inspect the following:

a the fuel supply system, for proper sealing;
b the fuel flow rate, to make sure that it has been set based on the firing rate required of the burner;
c the burner firing system, to make sure that it is supplied for the designed fuel type;
d the fuel supply pressure, to make sure that it is included in the range shown on the rating plate;
e the fuel supply system, to make sure that the system dimensions are adequate to the burner firing rate, and that the system is equipped with all the safety and control devices required by the regulations in force.

- When the burner is to remain idle for some time, the fuel supply tap or taps should be closed.

SPECIAL INSTRUCTIONS FOR USING GAS

Have qualified personnel inspect the installation to ensure that:

a the gas delivery line and train are in compliance with the regulations and provisions in force;
b all gas connections are tight;
c the boiler room ventilation openings are such that they ensure the air supply flow required by the current regulations, and in any case are sufficient for proper combustion.

- Do not use gas pipes to earth electrical equipment.
- Never leave the burner connected when not in use. Always shut the gas valve off.
- In case of prolonged absence of the user, the main gas delivery valve to the burner should be shut off.

Precautions if you can smell gas

a do not operate electric switches, the telephone, or any other item likely to generate sparks;
b immediately open doors and windows to create an air flow to purge the room;
c close the gas valves;
d contact qualified personnel.

- Do not obstruct the ventilation openings of the room where gas appliances are installed, to avoid dangerous conditions such as the development of toxic or explosive mixtures.

DIRECTIVES AND STANDARDS

Gas burners

European directives

-Regulation 2016/426/UE (appliances burning gaseous fuels)
-2014/35/UE (Low Tension Directive)
-2014/30/UE (Electromagnetic compatibility Directive)
-2006/42/EC (Machinery Directive)

Harmonized standards

-UNI EN 676 (Automatic forced draught burners for gaseous fuels)
-EN 55014-1 (Electromagnetic compatibility- Requirements for house hold appliances, electric tools and similar apparatus)
-EN 60204-1:2006 (Safety of machinery – Electrical equipment of machines.)
-CEI EN 60335-1 (Specification for safety of household and similar electrical appliances);
-CEI EN 60335-2-102 (Household and similar electrical appliances. Safety. Particular requirements for gas, oil and solid-fuel burning appliances having electrical connections).
-UNI EN ISO 12100:2010 (Safety of machinery - General principles for design - Risk assessment and risk reduction);

Light oil burners

European directives

-2014/35/UE (Low Tension Directive)
-2014/30/UE (Electromagnetic compatibility Directive)
-2006/42/EC (Machinery Directive)

Harmonized standards

-UNI EN 267-2011(Automatic forced draught burners for liquid fuels)
-EN 55014-1 (Electromagnetic compatibility- Requirements for house hold appliances, electric tools and similar apparatus)
-EN 60204-1:2006 (Safety of machinery – Electrical equipment of machines.)
-CEI EN 60335-1 (Specification for safety of household and similar electrical appliances);
-CEI EN 60335-2-102 (Household and similar electrical appliances. Safety. Particular requirements for gas, oil and solid-fuel burning appliances having electrical connections).
-UNI EN ISO 12100:2010 (Safety of machinery - General principles for design - Risk assessment and risk reduction);

Heavy oil burners

European Directives

-2014/35/UE (Low Tension Directive)
-2014/30/UE (Electromagnetic compatibility Directive)
-2006/42/EC (Machinery Directive)

Harmonized standards

-UNI EN 267(Automatic forced draught burners for liquid fuels)
-EN 55014-1 (Electromagnetic compatibility- Requirements for house hold appliances, electric tools and similar apparatus)
-EN 60204-1:2006 (Safety of machinery – Electrical equipment of machines.)
-CEI EN 60335-1 (Specification for safety of household and similar electrical appliances);
-CEI EN 60335-2-102 (Household and similar electrical appliances. Safety. Particular requirements for gas, oil and solid-fuel burning appliances having electrical connections).
-UNI EN ISO 12100:2010 (Safety of machinery - General principles for design - Risk assessment and risk reduction);

Gas - Light oil burners

European Directives

-Regulation 2016/426/UE (appliances burning gaseous fuels)
-2014/35/UE (Low Tension Directive)
-2014/30/UE (Electromagnetic compatibility Directive)
-2006/42/EC (Machinery Directive)

Harmonized standards

-UNI EN 676 (Automatic forced draught burners for gaseous fuels)
-UNI EN 267(Automatic forced draught burners for liquid fuels)
-EN 55014-1 (Electromagnetic compatibility- Requirements for house hold appliances, electric tools and similar apparatus)
-EN 60204-1:2006 (Safety of machinery – Electrical equipment of machines.)
-CEI EN 60335-1 (Specification for safety of household and similar electrical appliances);
-CEI EN 60335-2-102 (Household and similar electrical appliances. Safety. Particular requirements for gas, oil and solid-fuel burning appliances having electrical connections).
-UNI EN ISO 12100:2010 (Safety of machinery - General principles for design - Risk assessment and risk reduction);

Gas - Heavy oil burners

European directives:

-Regulation 2016/426/UE (appliances burning gaseous fuels)
-2014/35/UE (Low Tension Directive)
-2014/30/UE (Electromagnetic compatibility Directive)
-2006/42/EC (Machinery Directive)

Harmonized standards

-UNI EN 676 (Automatic forced draught burners for gaseous fuels)
-EN 55014-1 (Electromagnetic compatibility- Requirements for house hold appliances, electric tools and similar apparatus)
-EN 60204-1:2006 (Safety of machinery – Electrical equipment of machines.)
-CEI EN 60335-1 (Specification for safety of household and similar electrical appliances);
-CEI EN 60335-2-102 (Household and similar electrical appliances. Safety. Particular requirements for gas, oil and solid-fuel burning appliances having electrical connections).
-UNI EN ISO 12100:2010 (Safety of machinery - General principles for design - Risk assessment and risk reduction);

Industrial burners

European directives

-Regulation 2016/426/UE (appliances burning gaseous fuels)
-2014/35/UE (Low Tension Directive)
-2014/30/UE (Electromagnetic compatibility Directive)
-2006/42/EC (Machinery Directive)

Harmonized standards

-EN 55014-1 (Electromagnetic compatibility- Requirements for house hold appliances, electric tools and similar apparatus)
-EN 746-2 (Industrial thermoprocessing equipment - Part 2: Safety requirements for combustion and fuel handling systems)
-UNI EN ISO 12100:2010 (Safety of machinery - General principles for design - Risk assessment and risk reduction);
-EN 60204-1:2006 (Safety of machinery – Electrical equipment of machines.)
-EN 60335-2 (Electrical equipment of non-electric appliances for household and similar purposes. Safety requirements)

Burner data plate

For the following information, please refer to the data plate:

- burner type and burner model: must be reported in any communication with the supplier
- burner ID (serial number): must be reported in any communication with the supplier
- date of production (year and month)
- information about fuel type and network pressure

Type	--
Model	--
Year	--
S.Number	--
Output	--
Oil Flow	--
Fuel	--
Category	--
Gas Pressure	--
Viscosity	--
El.Supply	--
El.Consump.	--
Fan Motor	--
Protection	--
Drwaing n°	--
P.I.N.	--

SYMBOLS USED

WARNING! Failure to observe the warning may result in irreparable damage to the unit or damage to the environment

DANGER! Failure to observe the warning may result in serious injuries or death.

WARNING! Failure to observe the warning may result in electric shock with lethal consequences

Figures, illustrations and images used in this manual may differ in appearance from the actual product.

BURNER SAFETY

The burners - and the configurations described below - comply with the regulations in force regarding health, safety and the environment. For more in-depth information, refer to the declarations of conformity that are an integral part of this Manual.

DANGER! Incorrect motor rotation can seriously damage property and injure people.

Residual risks deriving from misuse and prohibitions

The burner has been built in order to make its operation safe; there are, however, residual risks.

Do not touch any mechanical moving parts with your hands or any other part of your body. Injury hazard
Do not touch any parts containing fuel (i.e. tank and pipes). Scalding hazard
Do not use the burner in situations other than the ones provided for in the data plate.
Do not use fuels other than the ones stated.
Do not use the burner in potentially explosive environments.
Do not remove or by-pass any machine safety devices.
Do not remove any protection devices or open the burner or any other component while the burner is running.
Do not disconnect any part of the burner or its components while the burner is running.
Untrained staff must not modify any linkages.

After any maintenance, it is important to restore the protection devices before restarting the machine.
All safety devices must be kept in perfect working order.
Personnel authorized to maintain the machine must always be provided with suitable protections.

ATTENTION: while running, the parts of the burner near the generator (coupling flange) are subject to overheating. Where necessary, avoid any contact risks by wearing suitable PPE.

PART I: INSTALLATION

Burner model identification

Burners are identified by burner type and model. Burner model identification is described as follows.

Type **RN520** Model **D-. PR. S. *. A.** (1) (2) (3) (4) (5) (6)	
(1) BURNER TYPE	**RN510 - RN515 - RN520 - RN525**
(2) FUEL	N - Heavy oil, viscosity ≤ 50cSt (7° E) @ 50° C E - Heavy oil, viscosity ≤ 110cSt (15°E) @ 50° C D - Heavy oil, viscosity ≤ 400cSt (50° E) @ 50° C P - Petroleum, viscosity 89cSt (12° E) @ 50° C
(3) OPERATION (Available versions)	PR - Progressive MD - Fully modulating
(4) BLAST TUBEBLAST TUBE	S - Standard L - Extended
(5) DESTINATION COUNTRYDESTINATION COUNTRY	* - see data plate
(6) BURNER VERSION	A - Standard Y - Special

Technical Specifications

BURNER		RN510	RN515	RN520	RN525
Output	min - max kW	1314 - 3953	1628 - 4884	2326 - 6977	2000 - 8000
Fuel		Heavy oil			
Viscosity		See “Burner model identification” table			
Heavy oil rate	min. - max. kg/h	117 - 352	145 - 435	207 - 622	178 - 713
Oil train inlet pressure	bar	4 max			
Power supply		400V 3N a.c. 50Hz			
Total power consumption (Heavy oil)	kW	33,1	43,0	59,7	69,2
Total power consumption (Petroleum)	kW	17,1	23,0	31,7	--
Fan motor	kW	7,5	11,0	15,0	18,5
Pump motor	kW	1,1	1,5	2,2	2,2
Pre-heater resistors (heavy oil)	kW	24	30	42	48
Pre-heater resistors (Petroleum)	kW	8	10	14	--
Protection		IP40			
Approx. weight	kg	320	370	415	430
Operation		Progressive - Fully modulating			
	min. - max. °C	-10 ÷ +50			
Storage Temperature	min. - max. °C	-20 ÷ +60			
Working service*Working service*		Intermittent			

Heavy oil net calorific value (Hi): 40.4 MJ/kg (average value).

NOTE ON THE WORKING SERVICE: for safety reasons, one controlled shutdown must take place every 24 hours of continuous working.

Performance Curves

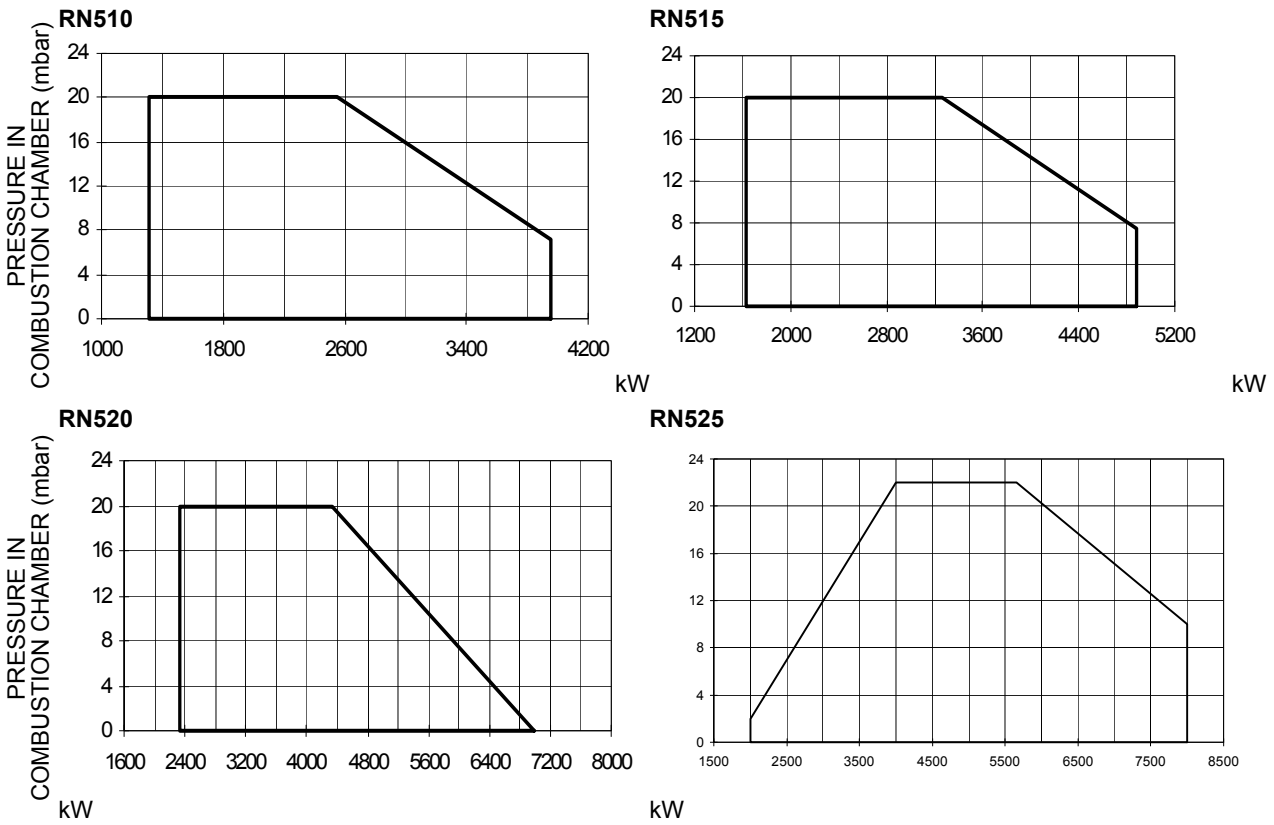

To get the input in kcal/h, multiply value in kW by 860.

Data are referred to standard conditions: atmospheric pressure at 1013mbar, ambient temperature at 15°C

NOTE: The performance curve is a diagram that represents the burner performance in the type approval phase or in the laboratory tests, but does not represent the regulation range of the machine. On this diagram the maximum output point is usually reached by adjsuting the combustion head to its “MAX” position (see paragraph “Adjusting the combustion head”); the minimum output point is reached setting the combustion head to its “MIN” position. During the first ignition, the combustion head is set in order to find a compromise between the burner output and the generator specifications, that is why the minimum output may be different from the Performance curve minimum

Overall dimensions (mm)

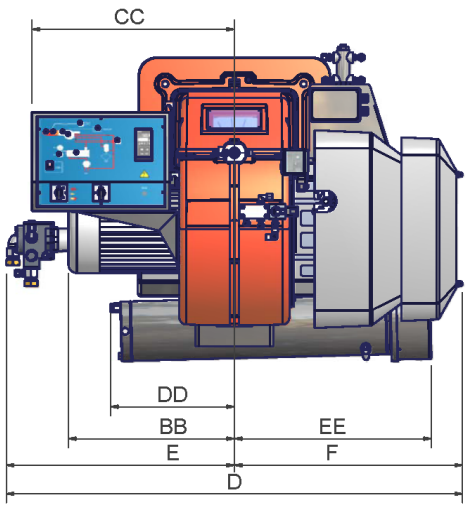

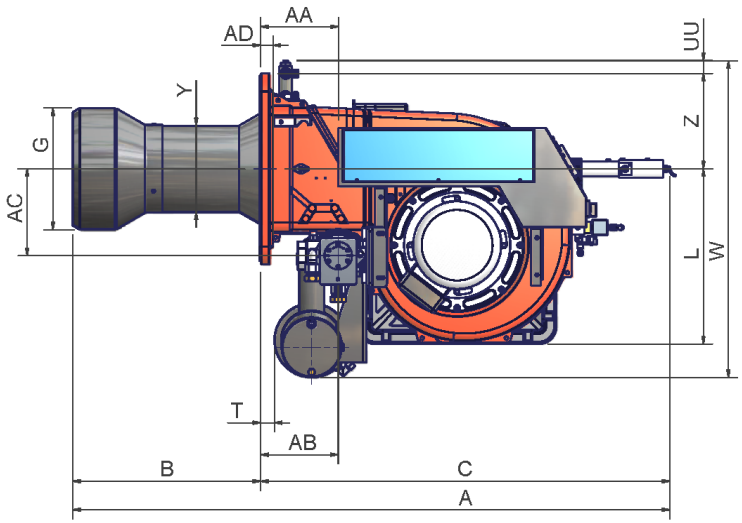

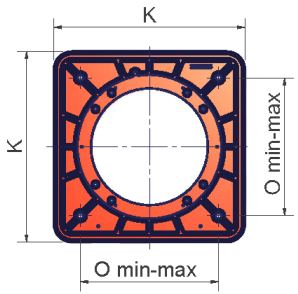

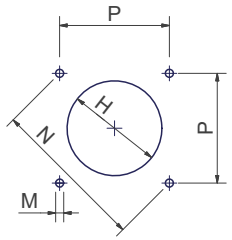

Boiler recommended boiler drilling template

	A(S*)	A(L*)	AA	AB	AC	AD	B(S*)	B(L*)	BB	C	CC	D	DD**	E	EE**	F	G	H	K	L	M	N	O	P	T	UU	W	Y	Z
RN510	1502	1682	221	217	246	35	350	530	468	1152	571	1285	349	643	556	642	345	385	540	496	M14	552	390	390	37	36	897	328	270
RN515			145						508		598		x		x		384	424									802		
RN520				207	250												422	472											
RN525				197	275				650								434	484								78	844		

*S = measure referred to standard blast tube

*L = measure referred to extended blast tube

** RN515-520-525:

INSTALLING THE BURNER

Packing

Burners are despatched in wooden crates whose dimensions are:

RN510-515-520: 1720 x 1500 x 1210 (L x P x H)

RN525: 1800 x 1500 x 1300 (L x P x H)

Packing cases of this kind are affected by humidity and are not suitable for stacking. The following are placed in each packing case:

- burner;
- gasket to be inserted between the burner and the boiler;
- oil flexible hoses;
- oil filter;
- envelope containing this manual.

RN515-520-525: as far as these burners, the oil pumping/pre-heating unit is separate.

To get rid of the burner's packing, follow the procedures laid down by current laws on disposal of materials.

Handling the burner

ATTENTION! The handling operations must be carried out by specialised and trained personnel. If these operations are not carried out correctly, the residual risk for the burner to overturn and fall down still persists.
To move the burner, use means suitable to support its weight (see paragraph "Technical specifications").
The unpacked burner must be lifted and moved only by means of a fork lift truck.

The burner is mounted on a stirrup provided for handling the burner by means of a fork lift truck: the forks must be inserted into the A anb B ways. Remove the stirrup only once the burner is installed to the boiler.

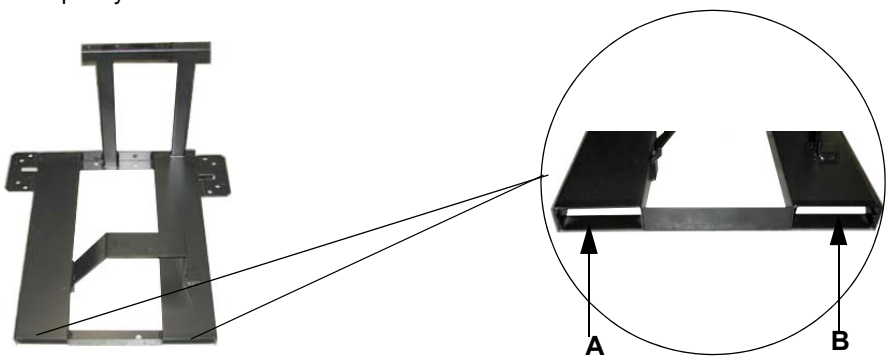

Fitting the burner to the boiler

To install the burner into the boiler, proceed as follows:

1 make a hole on the closing door of the combustion chamber as described on paragraph "Overall dimensions")
2 place the burner to the boiler: lift it up and handle it according to the procedure described on paragraph "Handling the burner";
3 place the stud bolts (5) on boiler's door, according to the burner drilling template described on paragraph "Overall dimensions";
4 fasten the stud bolts;
5 place the gasket on the burner flange;
6 install the burner into the boiler;
7 fix the burner to the stud bolts, by means of the fixing nuts, according to the next picture.
8 After fitting the burner to the boiler, ensure that the gap between the blast tube and the refractory lining is sealed with appropriate insulating material (ceramic fibre cord or refractory cement).

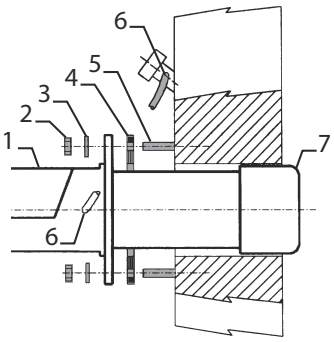

Keys

9
1 Burner
2 Fixing nut
3 Washer
4 Ceramic fibre plait
5 Stud bolt
Blast tube

MOUNTING POSITION

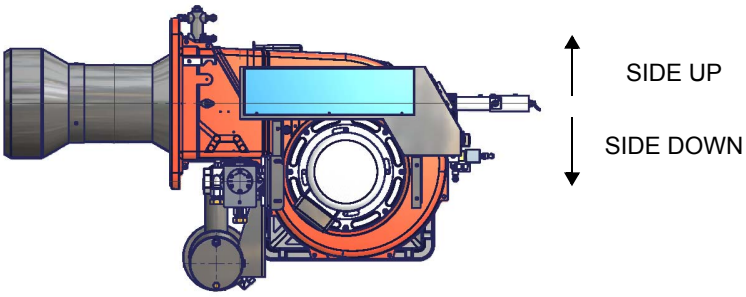

Burner is designed to operate with horizontal flame axis. Set the upper side of the burner flange in a horizontal position, in order to obtain the correct inclination of the pre-heating tank. For different installations, please contact the Technical Department.

.

Key

1 Burner flange (upper side indicated)

2 Bracket

3 Pre-heating tank on the burner

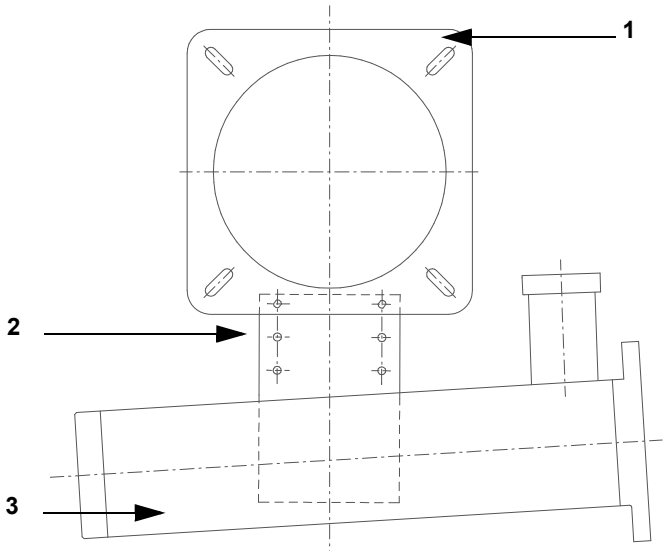

Electrical connections

WARNING: The burner is provided with an electrical bridge between terminals 6 and 7; when connecting the high/low flame thermostat, remove this bridge before connecting the thermostat.

IMPORTANT: Connecting electrical supply wires to the burner teminal block MA, be sure that the ground wire is longer than phase and neutral ones.

auxiliary contacts are provided (terminals no. 507 and no. 508 of the MA terminal block) to connect an intervention system (alarm/power supply cutoff) in case of fault of the oil resistor contactor (see Fig. 1-Fig. 2).

Respect the basic safety rules. Make sure of the connection to the earthing system. do not reverse the phase and neutral connections. Fit a differential thermal magnet switch adequate for connection to the mains.

ATTENTION: before executing the electrical connections, pay attention to turn the plant's switch to OFF and be sure that the burner's main switch is in 0 position (OFF) too. Read carefully the chapter "WARNINGS", and the "Electrical connections" section.

To execute the electrical connections, proceed as follows:

1 remove the cover from the electrical board, unscrewing the fixing screws;
2 execute the electrical connections to the supply terminal board as shown in the following diagrams,
3 check the direction of the motor (see next pargraph)
4 refit the panel cover

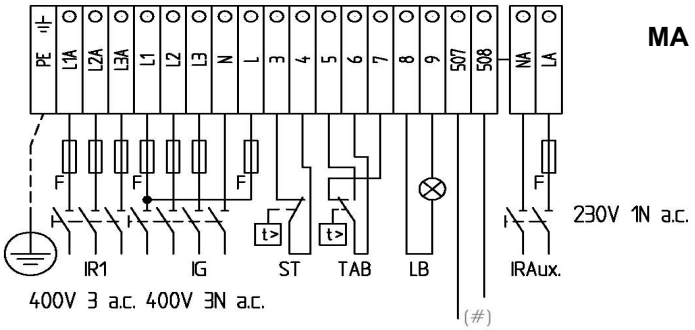

Fig. 1 - Progressive burners

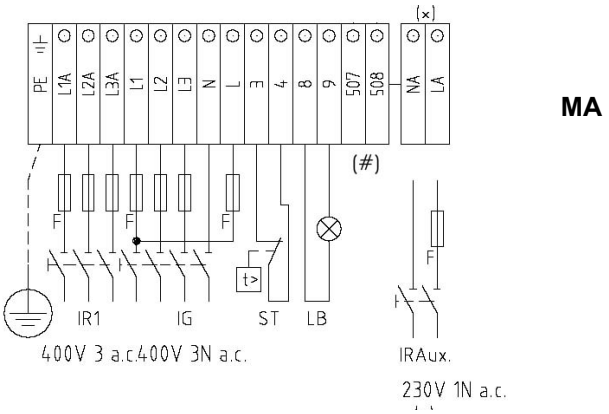

Fig. 2 - Fully modulating burners

(#) Free contact for "Faulty heater resistor contactor"
Probes connection oby means of the 7-pins plug (Fig. 4) - see Fig. 3) for connections.

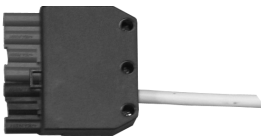

Fig. 4

7-pole manifold, see fig. 4. For connections, see attached wiring diagram

RN515-520-525: As for the connection of the pump-preheating unit, see wiring diagrams.

DANGER! Incorrect motor rotation can seriously damage property and injure people.

Fan and pump motors direction

Once the electrical connection of the burner is performed, remember to check the rotation of the motor. The motor should rotate in an counterclockwise direction looking at cooling fan. In the event of incorrect rotation reverse the three-phase supply and check again the rotation of the motor.

Fuel Oil filters

	Item	Note	Connection	Max. operating pressure	Max. operating tempera-ture	Filtering degree	Protection
3	GA70501	-	1”	4 bar	90 °C	300 µ	IP65

Fuel Oil filters

	Item	Note	Connection	Max. operating pressure	Max. operating tempera-ture	Filtering degree	Protection
2	GA70101	-	1”	2 bar	90 °C	300 µ	IP65

RN515-520-525as far as these burners, the oil pumping/pre-heating unit is included

Connecting the oil heating resistors

8 - 12 kW

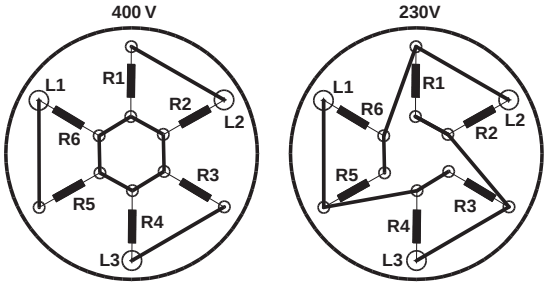

Fig. 5

18 - 24 kW

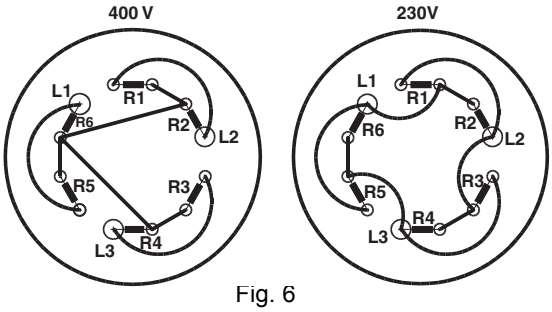

Fig. 6

ELECTRIC MOTOR CONNECTION

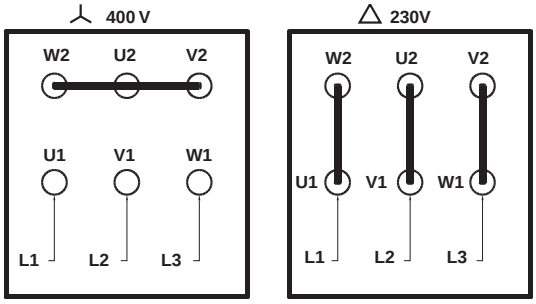

Fig. 8

Double-pipe and single-pipe system

The pumps that are used can be installed both into single-pipe and double-pipe systems.

Single-pipe system: a single pipe drives the oil from the tank to the pump’s inlet. Then, from the pump, the pressurised oil is driven to the nozzle: a part comes out from the nozzle while the othe part goes back to the pump. In this system, the by-pass pulg, if provided, must be removed and the optional return port, on the pump’s body, must be sealed by steel plug and washer.

Double-pipe system: as for the single pipe system, a pipe that connects the tank to the pump’s inlet is used besides another pipe that connects the pum’s return port to the tank, as well. The excess of oil goes back to the tank: this installation can be considered self-bleeding. If provided, the inside by-pass plug must be installed to avoid air and fuel passing through the pump.

Burners come out from the factory provided for double-stage systems. They can be suited for single-pipe system (recommended in the case of gravity feed) as decribed before.To change from a 1-pipe system to a 2-pipe-system, insert the by-pass plug **G** (as for ccw-rotation- referring to the pump shaft).

Caution: Changing the direction of rotation, all connections on top and side are reversed.

Suntec TA

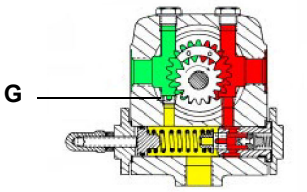

Bleed

Bleeding in two-pipe operation is automatic : it is assured by a bleed flat on the piston. In one-pipe operation, the plug of a pressure gauge port must be loosened until the air is evacuated from the system.

Oil pumps

RN510: SUNTEC TA3
RN515: SUNTEC TA4
RN520 - RN525: SUNTEC TA5

Suntec TA..	
Oil viscosity	3 ÷ 75 cSt
Oil temperature	0 ÷ 150°C
Min. suction pressure	- 0.45 bar to avoid gasing
Max. suction pressure	5 bar
Max. return pressure	5 bar
Rotation speed	3600 rpm max.

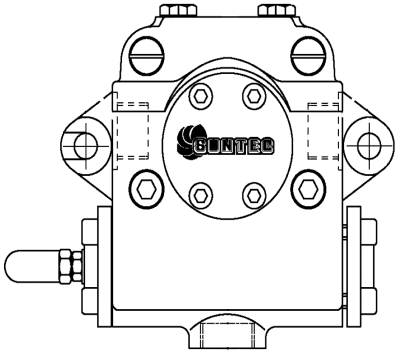

1 Inlet G1/2
2 To the nozzle G1/2
3 Return G1/2
4 Pressure gauge port G1/4
5 Vacuum gauge port G1/4
6 Pressure governor

HP-Technick UHE-A..

Oil viscosity	3 ÷ 75 cSt
Oil temperature	0 ÷ 150°C
Min. suction pressure	- 0.45 bar to avoid gasing
Max. suction pressure	5 bar
Max. return pressure	5 bar
Rotation speed	3600 rpm max.

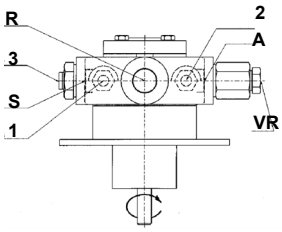

Key
1. Connection for manometer 1 delivery M1 – G1/4
2. Connection for manometer 2 suction M2 – G1/4
3. Connection for manometer 3 M3
A. Suction connection – G1/2
D. Direct - clockwise
I. Indirect – counter clockwise
R. By-pass connection– G1/2
S. Delivery connection – G1/2
VR. After removal of cover screw:pressure regulation

About the use of fuel pumps

- Make sure that the by-pass plug is not used in a single pipe installation, because the fuel unit will not function properly and damage to the pump and burner motor could result.
- Do not use fuel with additives to avoid the possible formation over time of compounds which may deposit between the gear teeth, thus obstructing them.
- After filling the tank, wait before starting the burner. This will give any suspended impurities time to deposit on the bottom of the tank, thus avoiding the possibility that they might be sucked into the pump.
- On initial commissioning a "dry" operation is foreseen for a considerable length of time (for example, when there is a long suction line to bleed). To avoid damages inject some lubrication oil into the vacuum inlet.
- Care must be taken when installing the pump not to force the pump shaft along its axis or laterally to avoid excessive wear on the joint, noise and overloading the gears.
- Pipes should not contain air pockets. Rapid attachment joint should therefore be avoided and threaded or mechanical seal junctions preferred. Junction threads, elbow joints and couplings should be sealed with removable sg component. The number of junctions should be kept to a minimum as they are a possible source of leakage.
- Do not use PTFE tape on the suction and return line pipes to avoid the possibility that particles enter circulation. These could deposit on the pump filter or the nozzle, reducing efficiency. Always use O-Rings or mechanical seal (copper or aluminium gaskets) junctions if possible.
- An external filter should always be installed in the suction line upstream of the fuel unit.

Connecting the oil flexible hoses

To connect the flexible light oil hoses to the pump, proceed as follows, according to the pump provided:

1 remove the closing nuts on the inlet (**A**) and return (**R**) connections of the pump;

2 screw the rotating nut of the two flexible hoses on the pump **being careful to avoid exchanging the inlet and return lines**: see the arrows marked on the pump that show the inlet and the return (see prevoius paragraph).

Suntec TA..

Connections to the oil gun

Gun with the oil nozzle inside

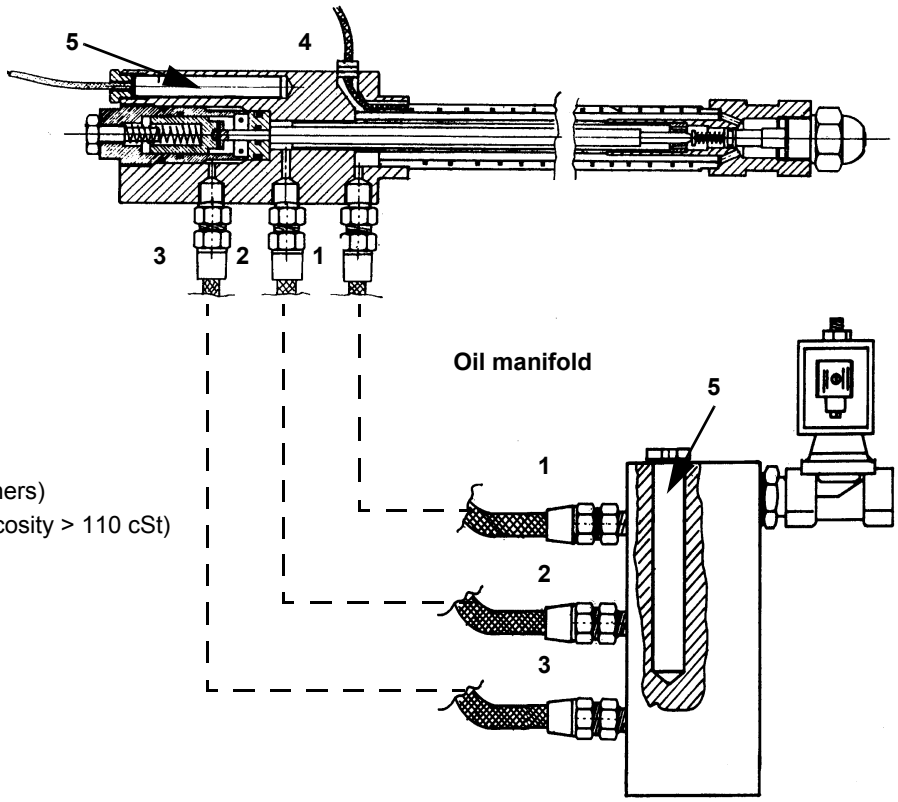

3
1 Inlet
2 Return
3 Gun opening
4 Heating wire (only for high density oil burners)
5 Cartdrige-type heater (only for oil with viscosity > 110 cSt)
6

Recommendations to design heavy oil feeding plants

This paragraph is intended to give some suggestions to make feeding plants for heavy oil burners. To get a regular burner operation, it is very important to design the supplying system properly. Here some suggestions will be mentioned to give a brief description.

The term “heavy oil” is generic and summarises several chemical-physical properties, above all viscosity. The excessive viscosity makes the oil impossible to be pumped, so it must be heated to let it flow in the pipeline; because of the low-boiling hydrocarbons and dissolved gases, the oil must be also pressurised. The pressurisation is also necessary to feed the burner pump avoiding its cavitation because of the high suction at the inlet. The supplying system scope is to pump and heat oil.

The oil viscosity is referred in various unit measures; the most common are: °E, cSt, Saybolt and Redwood scales. Table 3 shows the-various unit convertions (e.g.: 132 cSt viscosity corresponds to 17.5°E viscosity). The diagram in Fig. 9 shows how the heavy oil viscosity changes according to its temperature.

Example: an oil with 22°E viscosity at 50°C once heated to 100°C gets a 3 °E viscosity.As far as the pumping capability, it depends on the type of the pump that pushes the oil even if on diagram in Fig. 9 a generic limit is quoted at about 100 °E, so it is recommended to refer to the specifications of the pump provided. Usually the oil minimum temperature at the oil pump inlet increases as viscosity does, in order to make the oil easy to pump. Referring to the diagram on Fig. 10, it is possible to realise that to pump an oil with 50°E viscosity at 50°C, it must be heated at about 80°C.

Pipe heating system

Pipe heating system must be provided, that is a system to heat pipes and plant components to mantain the viscosity in the pumping limits. Higher the oil viscosity and lower the ambient temperature, more necessary the pipe heating system.

Inlet minimum pressure of the pump (both for supplying system and burner)

A very low pressure leads to cavitation (signalled by its peculiar noise): the pump manifacturer declares the minimum value. Therefore, check the pump technical sheets. By increasing the oil temperature, also the minimum inlet pressure at the pump must increase, to avoid the gassification of the oil low-boiling products and the cavitation. The cavitation compromises the burner operation, it causes the pump to break too. The diagram on Fig. 11 roughly shows the inlet pump pressure according to the oil temperature.

Pump operating maximum pressure (both for the supplying system and burner)

Remember that pumps and all the system components through which the oil circulates, feature an upper limit. Always read the technical documentation for each component. Schemes on Fig. 14 and Fig. 5 are taken from UNI 9248 "liquid fuel feeding lines from tank to burner" standard and show how a feeding line should be designed. For other countries, see related laws in force. The pipe dimensio-

ning, the execution and the winding dimensioning and other construcitve details must be provided by the installer.

Adjusting the supplying oil ring According to the heavy oil viscosity used, in the table below indicative temperature and pressure values to be set are shown.

Note: the temperature and pressure range allowed by the supplying ring components must be checked in the specifications table of the components themselves.

HEAVY OIL VISCOSITY AT 50 °C		PIPELINE PRESSURE	PIPELINE TEMPERATURE
cSt (°E)		bar	°C
	< 50 (7)	1- 2	20
> 50 (7)	< 110 (15)	1- 2	50
> 110 (15)	< 400 (50)	1- 2	65

Viscosity units conversion table

Cinematics viscosity Centistokes (cSt)	Engler Degrees (°E)	Saybolt Seconds Universal (SSU)	Saybolt Seconds Furol (SSF)	Redwood Seconds no.1 (Standard)	Redwood Seconds no..2 (Admiralty)
1	1	31	--	29	--
2.56	1.16	35	--	32.1	--
4.3	1.31	40	--	36.2	5.1
7.4	1.58	50	--	44.3	5.83
10.3	1.88	60	--	52.3	6.77
13.1	2.17	70	12.95	60.9	7.6
15.7	2.45	80	13.7	69.2	8.44
18.2	2.73	90	14.44	77.6	9.3
20.6	3.02	100	15.24	85.6	10.12
32.1	4.48	150	19.3	128	14.48
43.2	5.92	200	23.5	170	18.9
54	7.35	250	28	212	23.45
65	8.79	300	32.5	254	28
87.6	11.7	400	41.9	338	37.1
110	14.6	500	51.6	423	46.2
132	17.5	600	61.4	508	55.4
154	20.45	700	71.1	592	64.6
176	23.35	800	81	677	73.8
198	26.3	900	91	762	83
220	29.2	1000	100.7	896	92.1
330	43.8	1500	150	1270	138.2
440	58.4	2000	200	1690	184.2
550	73	2500	250	2120	230
660	87.6	3000	300	2540	276
880	117	4000	400	3380	368
1100	146	5000	500	4230	461
1320	175	6000	600	5080	553
1540	204.5	7000	700	5920	645
1760	233.5	8000	800	6770	737
1980	263	9000	900	7620	829
2200	292	10000	1000	8460	921
3300	438	15000	1500	13700	--
4400	584	20000	2000	18400	--

Tab. 1

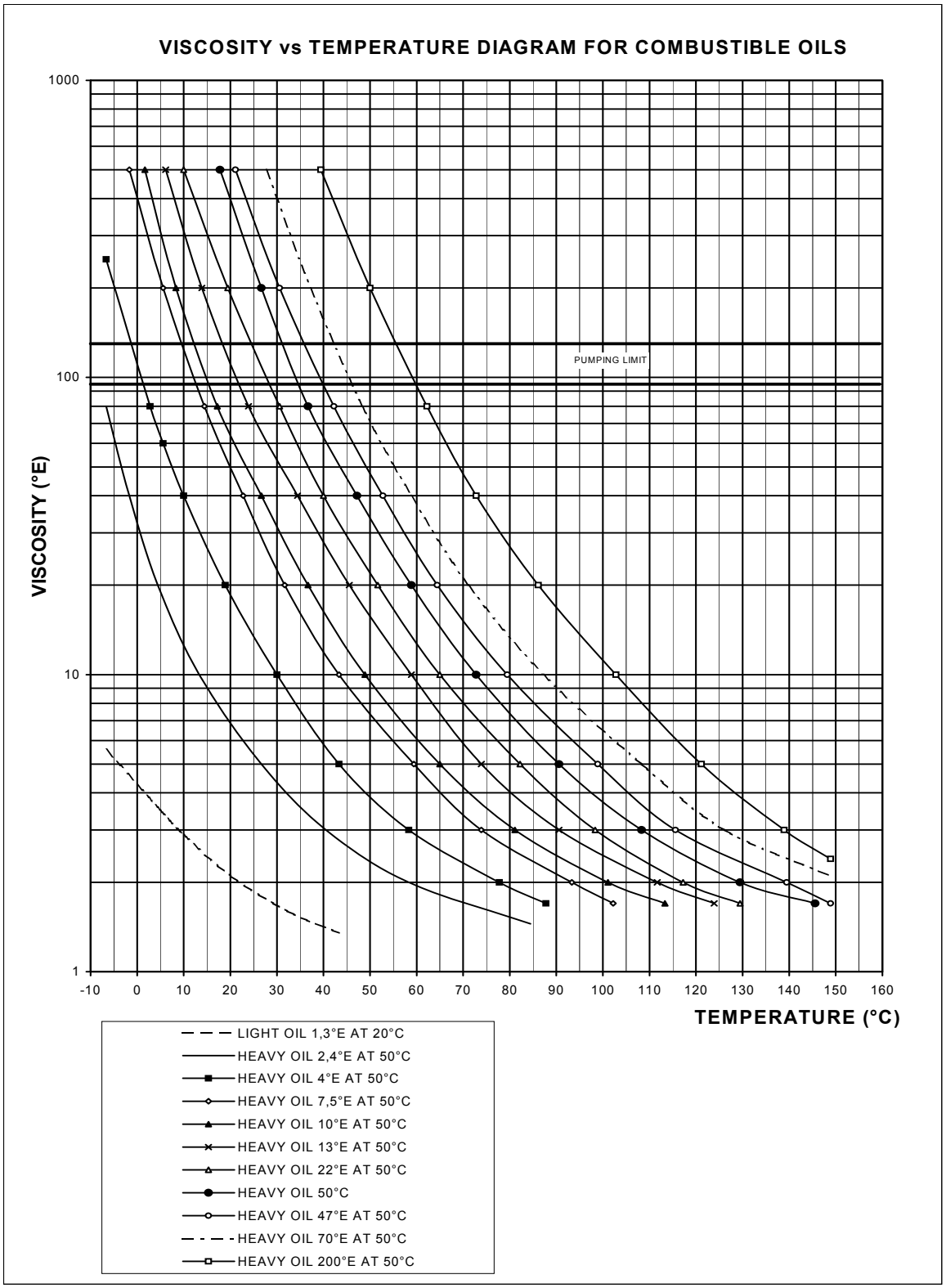

Fig. 9

Indicative diagram showing the oil temperature at burner pump inlet vs. oil viscosity Example: if the oil has a 50°E @ 50°C visco-

sity, the oil temperature at the pump inlet should be 80°C (see diagram).

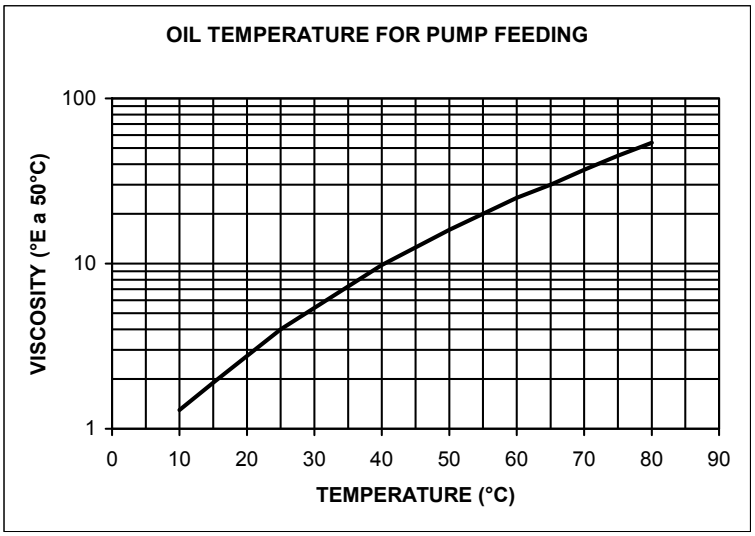

Fig. 10

Indicative diagram showing the oil pressure according to its temperature

PRESSION D'ALIMENTATION POMPE

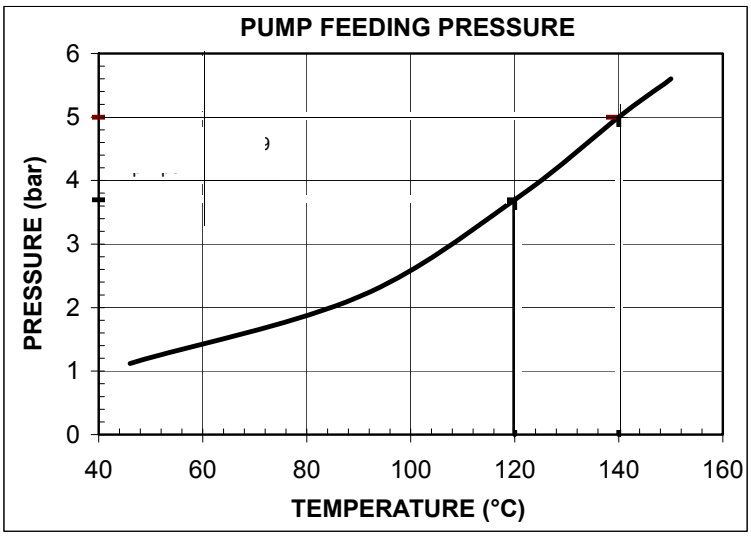

Fig. 11

Indicative diagram showing the oil atomising temperature according to its viscosity

Example: if the oil has a 50°E @ 50°C viscosity, the oil atomising temperature should be between 145°C and 160°C (see diagram).

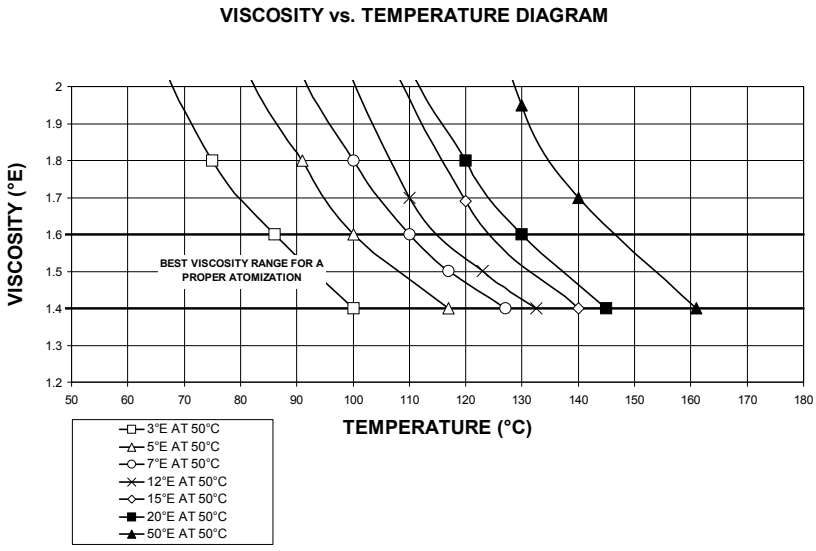

Fig. 12

Fig. 13 3ID00014 v2 **Hydraulic diagram - Two or more burners configuration**

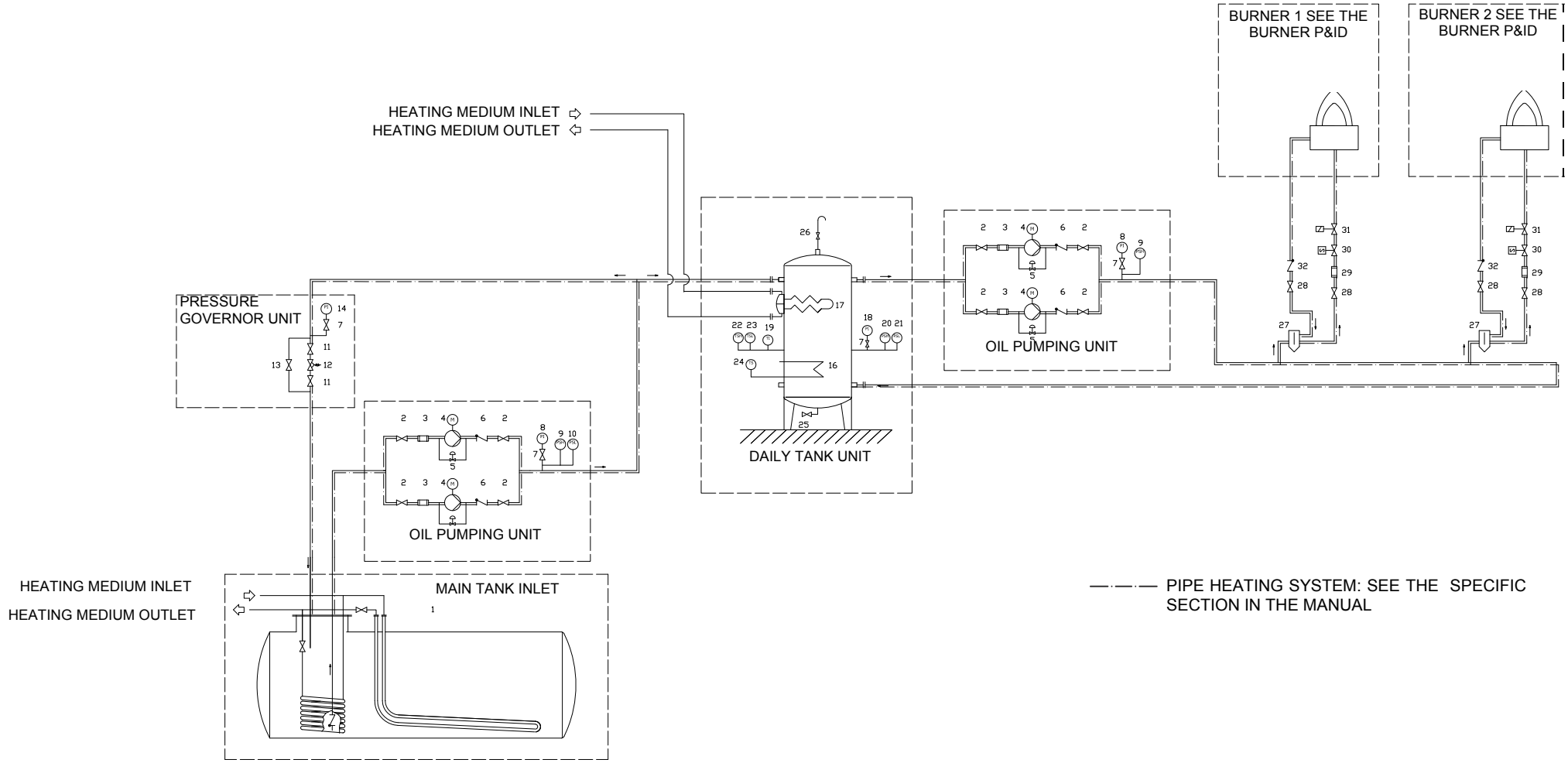

	OIL TRAIN		PRESSURE GOVERNOR UNIT				
1	Main tank	11	Manual valve	21	Low pressure switch	31	Safety valve
	OIL PUMPING UNIT	12	Pressure governor	22	Thermostat (high)	32	One-way valve
2	Manual valve	13	Needle valve	23	Thermostat (low)		
3	Filter	14	Pressure gauge	24	Thermostat		
4	Pump coupled to electrical motor		**DAILY TANK**	25	Manual valve		
5	Safety valve	15	Daily tank	26	Manual valve		
6	One-way valve	16	Electrical resistor		**TO THE BURNER**		
7	Manual valve	17	Heating device	27	Degassing bottle		
8	Pressure gauge	18	Pressure gauge	28	Manual valve		
9	Maximum pressure switch	19	Thermometer	29	Filter (supplied loose with the burner)		
10	Minimum pressure switch	20	High pressure switch	30	Solenoide valve		

Fig. 14 - 3ID0023 v2 - **Hydraulic diagram - Single burner configuration**

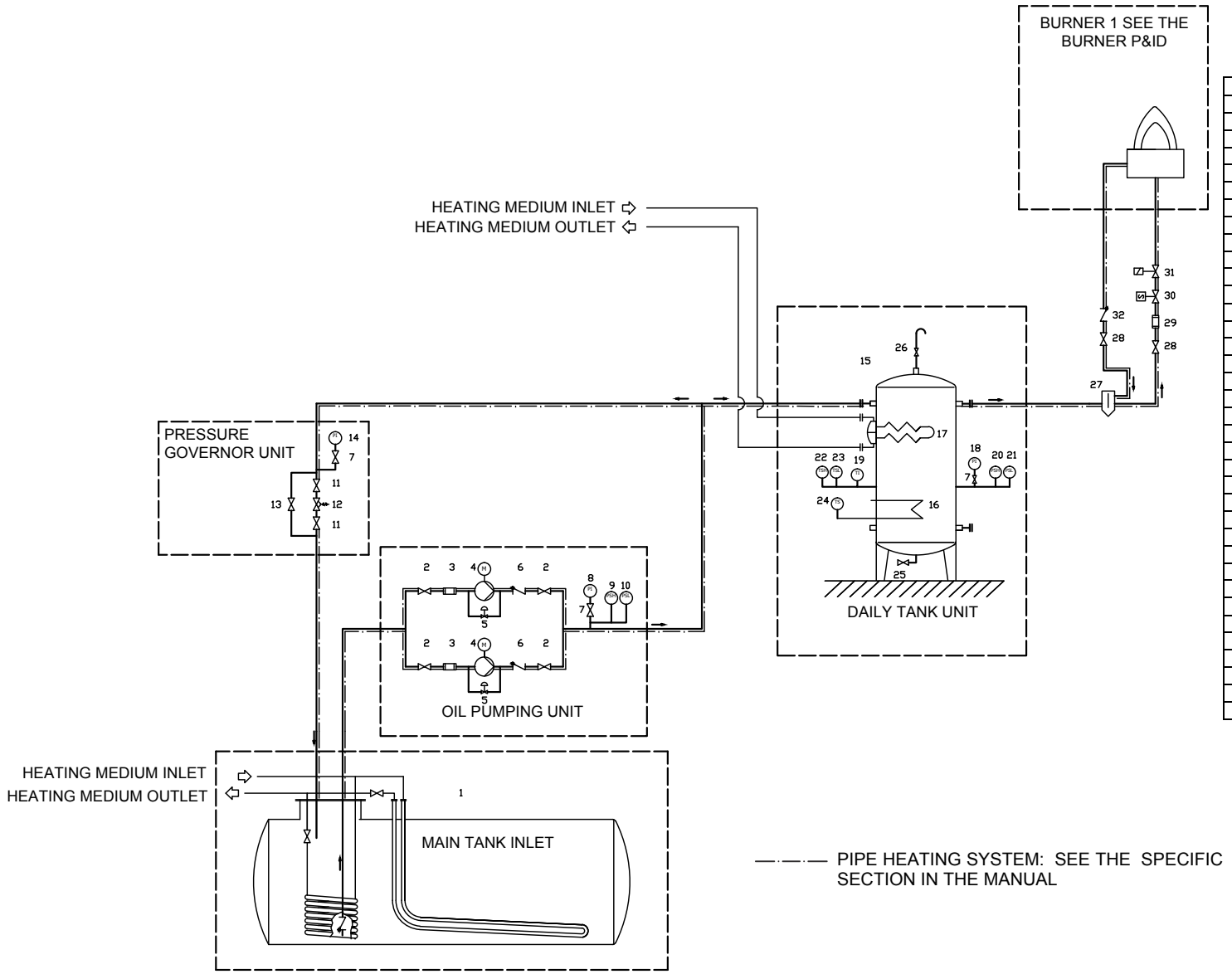

	OIL TRAIN
1	Main tank
	OIL PUMPING UNIT
2	Manual valve
3	Filter
4	Pump coupled to electrical motor
5	Safety valve
6	One-way valve
7	Manual valve
8	Pressure gauge
9	Maximum pressure switch
10	Minimum pressure switch
	PRESSURE GOVERNOR UNIT
11	Manual valve
12	Pressure governor
13	Needle valve
14	Pressure gauge
	DAILY TANK
15	Daily tank
16	Electrical resistor
17	Heating device
18	Pressure gauge
19	Thermometer
20	High pressure switch
21	Low pressure switch
22	Thermostat (high)
23	Thermostat (low)
24	Thermostat
25	Manual valve
26	Manual valve
	TO THE BURNER
27	Degassing bottle
28	Manual valve
29	Filter (supplied loose with the burner)
30	Solenoide valve
31	Safety valve
32	One-way valve

Adjusting light oil flow rate

The light oil flow rate can be adjusted choosing a by-pass nozzle that suits the boiler/utilisation output and setting the delivery and return pressure values according to the ones quoted on the chart below and the diagram on Fig. 15 (as far as reading the pressure values, see next paragraphs).

NOZZLE	DELIVERY PRESSURE bar	RETURN PRESSURE MIN. bar
FLUIDICS WR2/UNIGAS M3	25	7 - 9 (indicative values)

FLUIDICS NOZZLE: REFERENCE DIAGRAM (INDICATIVE ONLY)

DIMENSIONS	FLOW RATE kg/h		Indicative pessure on return (bar)
	Min	Max	
40	13	40	19
50	16	50	22
60	20	60	20
70	23	70	23
80	26	80	23
90	30	90	22
100	33	100	22
115	38	115	21
130	43	130	22
145	48	145	21
160	53	160	21
180	59	180	22
200	66	200	21
225	74	225	22
250	82	250	22
275	91	275	22
300	99	300	23
330	109	330	23
360	119	360	22
400	132	400	22
450	148	450	22
500	165	500	22
550	181	550	22
600	198	600	23
650	214	650	23
700	231	700	23
750	250	750	23
800	267	800	22
850	284	850	22

Tab. 2

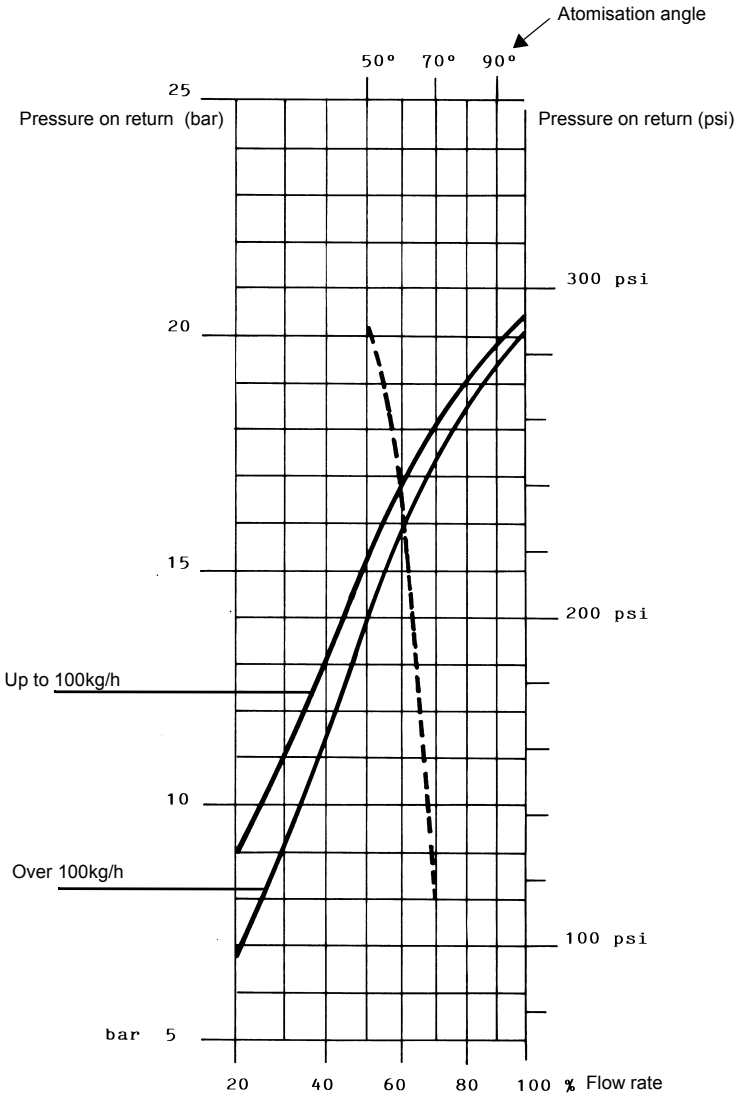

NOZZLE SUPPLY PRESSURE = 25 bar

- - - - - Atomisation angle according to the return pressure

——— % Flow rate

viscosity at nozzle = 5 cSt

ATTENTION! To achieve the maximum flow rate close completely the return line.

Oil thermostat adjustment

Progressive and fully modulanting oil burners are equipped with electronic multi-thermostat Danfoss MCX, whose operation is con-

trolled by thyristor. (for details refer to the attached technical documentation)

Fig. 15 - Danfoss MCX

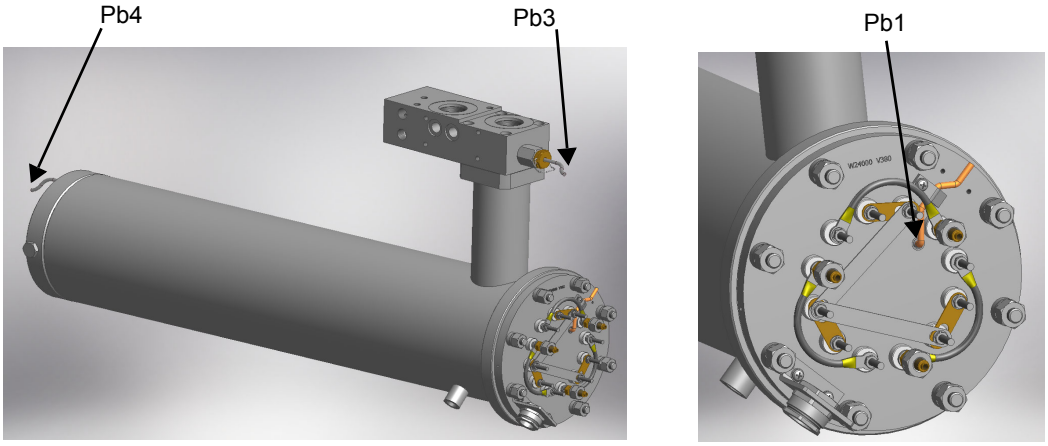

Fig. 16 - Probe connections (Danfoss MCX)(for burners with 1 tank)

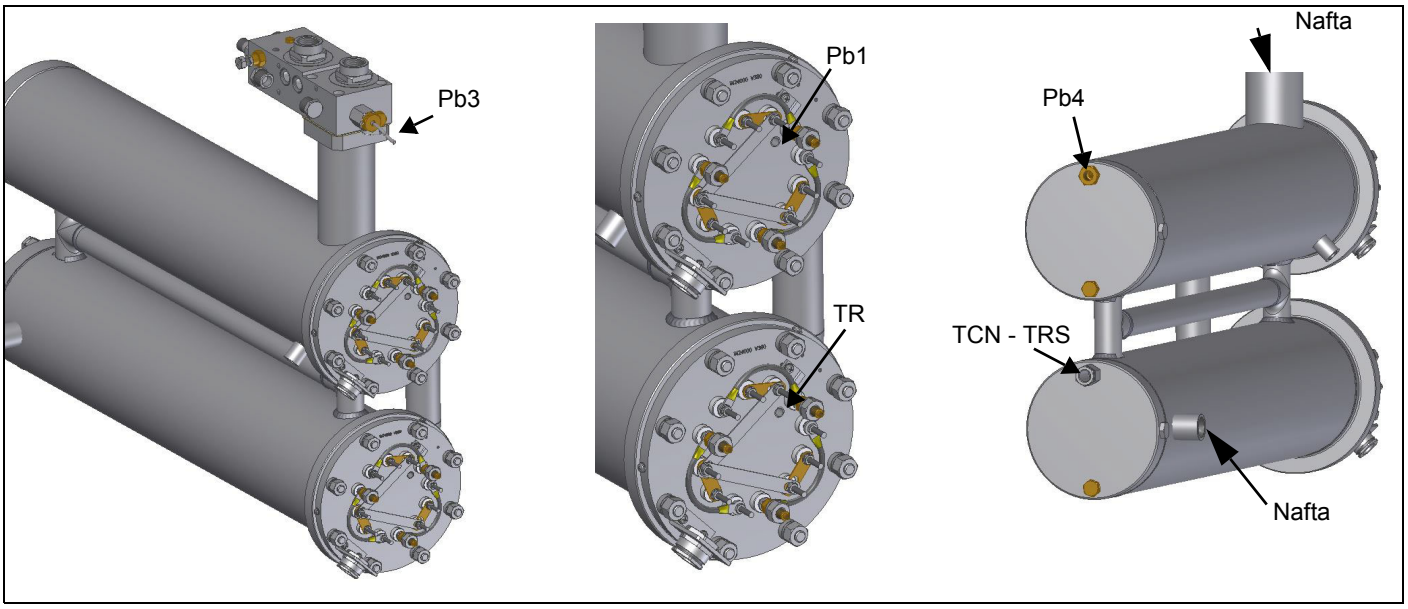

Fig. 17 - Probe connections (Danfoss MCX)(for burners with 2 tanks)

Menu path				Oil viscosity at 50 °C according to the letter shown in the burner model				
				P	N	E	D	H
				89 cSt	< 50 cSt	> 50 cSt < 110 cSt	> 110 cSt < 400 cSt	> 400 cSt < 4000 cSt
				12 °E	< 7°E	> 7 °E < 15 °E	> 15 °E < 50 °E	> 50 °E < 530 °E
Par								
rEG	Pb1	tr	Oil heater temperature probe	parameter not visible				
	Pb2	tCI	Plant consent temperature probe (when installed)	20 °C	70 °C	70 °C	70 °C	---
	Pb3	Oil	Oil heater output temperature probe (PID regulation);	60-70 °C	110-120 °C	120-130 °C	130-140 °C	140-150 °C
		SP0	Set-point oil heater with oil pump stopped (stand-by)	45 °C	120 °C	130 °C	140 °C	150 °C
	Pb4	tcn	Oil heater consent temperature probe	40 °C	100 °C	100 °C	110 °C	120 °C
		trS	Safety temperature tank resistors (manual reset)	120 °C	190-200 °C	190-200 °C	190-200 °C	190-200 °C

The oil viscosity at the nozzle, should be about 1,5 °E, which guarantees correct and safe functioning of the burner. The above temperature values are suggested and refer to a plant designed according to the prescriptions in the burner user manual.The suggested values can change in reference to the fuel oil specifications.

Burners equipped with double tank

The first oil tank resistance is controlled by menas thermostats according to the below scheme. All thermostats are located inside the control panel. To set the temperature use a small screwdriver. The second oil tank is controlled by “MCX” electronic thermostat.
Such temperature must be set during burner operation, checking temperature in the thermometer mounted on the pre-heating tank. We suggest a thermometer with scale up to 200° C.

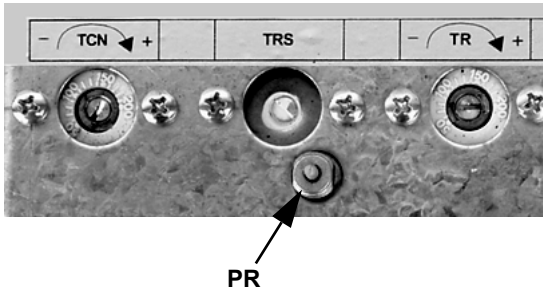

Adjust this thermostat to the correct value according to the viscosity-temperature diagram and check the temperature by using a thermometer with a scale of up to 200° C mounted on the pre-heating tank.

Safety resistors thermostat TRS: it is factory preset and sealed. Don not modify it!

When the set temperature is exceeded, check the reason and reset it by means of the push button PR

Resistor thermostat TR: check the best atomising oil temperature and set it on TR.

Thermostat TCN (it gives the enabling signal to the oil N.C. valve): set TCN at about

ADJUSTING AIR AND FUEL RATE

ATTENTION: before starting the burner up, be sure that the manual cutoff valves are open. Be sure that the mains switch is closed.

.***ATTENTION:*** During commissioning operations, do not let the burner operate with insufficient air flow (danger of formation of carbon monoxide); if this should happen, make the fuel decrease slowly until the normal combustion values are achieved.

Before starting up the burner, make sure that the return pipe to the tank is not obstructed. Any obstruction would cause the pump seal to break.

IMPORTANT! the combustion air excess must be adjusted according to the values in the following chart.

Recommended combustion parameters		
Fuel	Recommended (%) CO_2	Recommended (%) O_2
	CO_2 (%)	O_2 (%)
Heavy oil ≤ 50cSt (7° E) @ 50° C	11 ÷ 12	4.2 ÷ 6.2
Heavy oil ≥ 50cSt (7° E) @ 50° C	11 ÷ 12.5	4.7 ÷ 6.7

Adjustments - brief description

- Adjust the air and oil flow rates at the maximum output (“high flame”) first, by means of the air damper and the adjusting cam respectively.
- Check that the combustion parameters are in the suggested limits.
- Then, adjust the combustion values corresponding to the points between maximum and minimum: set the shape of the adjusting cam foil. The adjusting cam sets the air/fuel ratio in those points, regulating the opening-closing of the fuel governor.
- Now set the low flame output, acting on the low flame microswitch of the actuator in order to avoid the low flame output increasing too much or the flues temperature getting too low to cause condensation in the chimney.

Now, adjust the burner according to the actuator model provided.

Oil Flow Rate Settings by means of Berger STM30../Siemens SQM40.. actuator

1 Check the fan motor rotation.

2 Prime the oil pump acting on the related contactor (**CP** - see next picture): check the pump motor rotation (see “Fan and pump motors direction” on page 11) and keep pressing for some seconds until the oil circuit is charged;

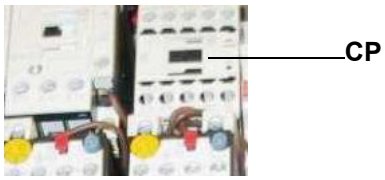

3 bleed the air from the **M** pressure gauge port (Fig. 18) by loosing the cap without removing it, then release the solenoid starter.

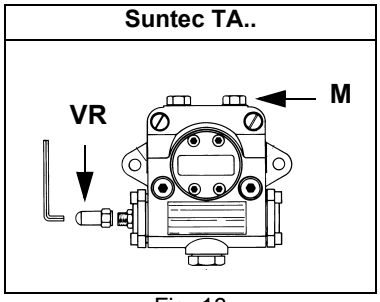

Fig. 18

4 Before starting the burner up, drive the high flame actuator microswitch matching the low flame one (in order to let the burner operates at the lowest output) to safely achieve the high flame stage.

5 Turn the burner on by means of its main switch **A** (see next picture): if the burner locks (LED **B** on in the control panel) press the RESET button (**C**) on the control panel - see chapter “OPERATION”.

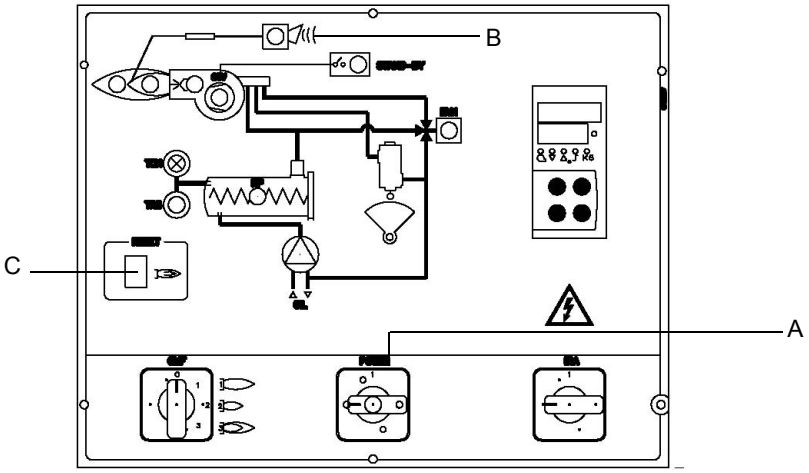

6 Start the burner up by means of the thermostat series and wait unitl the pre-purge phase comes to end and that burner starts up;

7 drive the burner to high flame stage, by means fo the thermostat **TAB** (high/low flame thermostat - see Wiring diagrams), as far as fully-modulating burners, see related paragraph.

8 Then move progressively the microswitch to higher values until it reaches the high flame position; always check the combustion values (see next steps).

SQM40.265 Actuator cams

Version with flame control LMO 24.255 / 44.255

(RD) I	High flame
(BU) II	Stand-by
(OG) III	Low flame
(YE) IV	-
(BK) V	-
(GN) VI	Advance stroke limitation cam - set +5° to cam **(BU) II**

Version with flame control LAL 2.25

(RD) I	High flame
(BU) II	Stand-by
(OG) III	Low flame
(YE) IV	-
(BK) V	-
(GN) VI	-

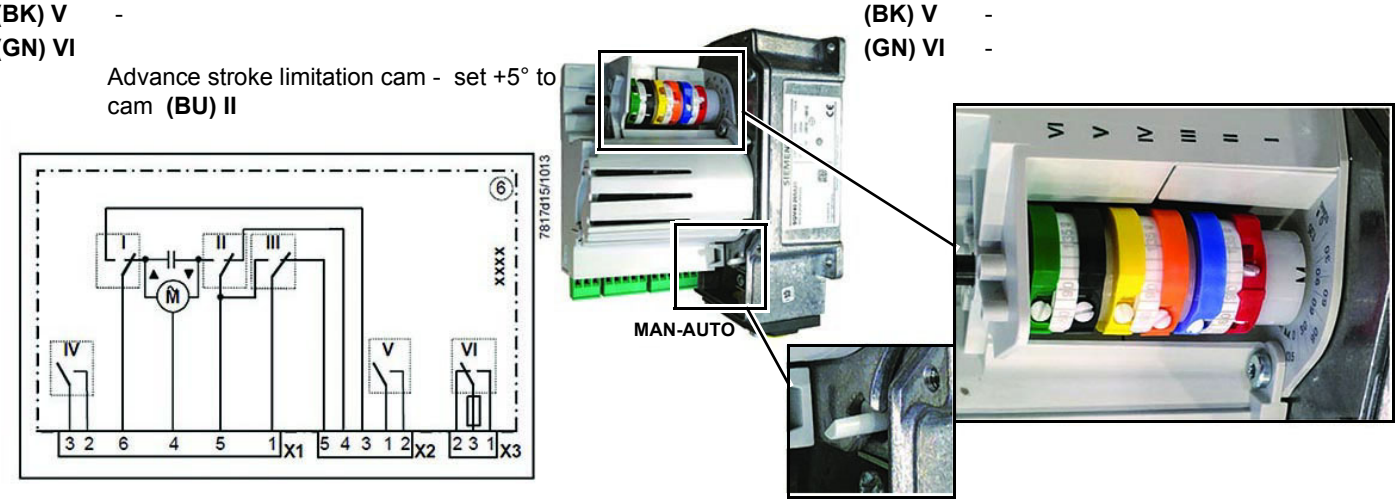

9 the nozzle supply pressure is already factory-set and must not be changed. Only if necessary, adjust the supply pressure as follows (see related paragraph); insert a pressure gauge into the port shown on Fig. 19 and act on on the pump adjusting screw **VR** (see Fig. 18) as to get the nozzle pressure at 25bar (see diagram on page 41).

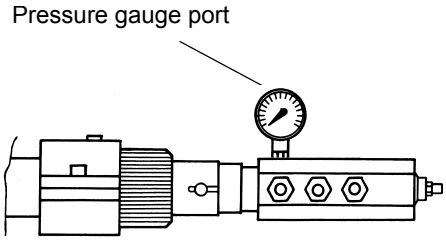

Fig. 19

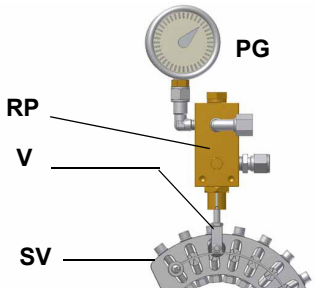

Fig. 21

10 in order to get the maximum oil flow rate, adjust the pressure (reading its value on the **PG** pressure gauge): checking always the combustion parameters, the adjustment is to be performed by means of the **SV** adjusting cam screw **V** (see picture) when the cam has reached the high flame position.

11 To adjust the **air flow rate in the high flame stage**, loose the **RA** nut and screw **VRA** as to get the desired air flow rate: moving the rod **TR** towards the air damper shaft, the air damper opens and consequently the air flow rate increases, moving it far from the shaft the air damper closes and the air flow rate decreases.

Note: once the procedure is perfomed, be sure that the blocking nut RA is fasten. Do not change the position of the air damper rods.

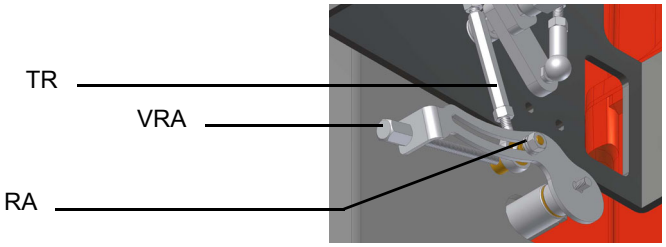

12 If necessary, change the combusiton head position: to let the burner operate at a lower output, loose the **VB** screw and move progressively back the combustion head towards the MIN position, by turning clockwise the **VRT** ring nut. Fasten **VB** screw when the adjustment is accomplished.

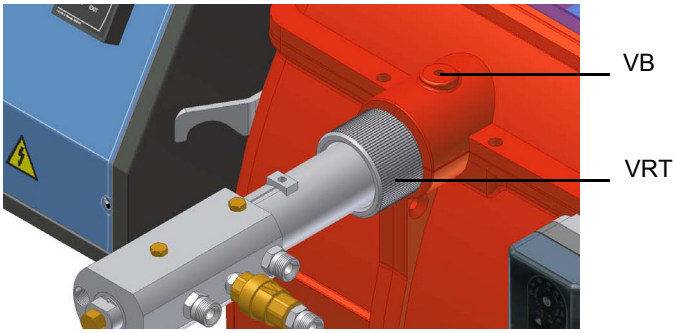

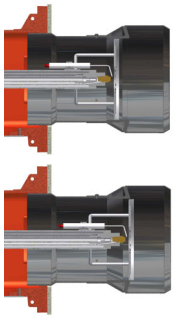

Attention! if it is necessary to change the head position, repeat the air and gas adjustments described above.

13 as for the point-to-point regulation in order to set the cam foil shape, move the low flame microswitch (cam III) a little lower than the maximum position (90°);

14 set the **TAB** thermostat to the minimum in order that the actuator moves progressively towards the low flame position (as for fully-modulating burners, refer to the related paragraph);

15 move cam III towards the minimum to make the actuator move towards the low flame until the two bearings find the adjusting screw that refers to a lower position: screw **V** to increase the rate, unscrew to decrease, in order to get the pressure as showed on diagram on Fig. 15, according to the requested rate.

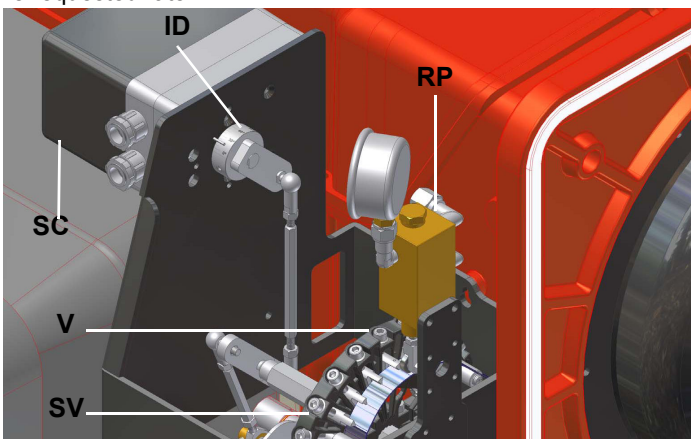

16 Move again cam III towards the minimum to meet the next screw on the adjusting cam and repeat the previous step; go on this way as to reach the desired low flame point.

17 The low flame position must never match the ignition position that is why cam **III** must be set 20°- 30° more than the ignition position.

18 Turn the burner off; then start it up again. If the adjustment is not correct, repeat the previous steps.

Calibration of air pressure switch

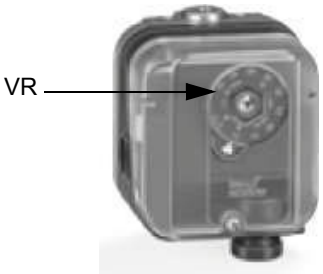

To calibrate the air pressure switch, proceed as follows:

- Remove the transparent plastic cap.
- Once air and heavy oil setting have been accomplished, startup the burner.
- During the pre-purge phase o the operation, turn slowly the adjusting ring nut **VR** in the clockwise direction until the burner lockout, then read the value on the pressure switch scale and set it to a value reduced by 15%.
- Repeat the ignition cycle of the burner and check it runs properly.
- Refit the transparent plastic cover on the pressure switch.

Fully-modulating burners

To adjust the fully-modulating burners, use the **CMF** switch on the burner control panel (see next picture), instead of the **TAB** thermostat as described on the previous paragraphs about the progressive burners. Go on adjusting the burner as described before, paying attention to use the CMF switch intead of **TAB**.

The **CMF** position sets the oprating stages: to drive the burner to the high-flame stage, set CMF=1; to drive it to the low-flame stage, set CMF=2.

To move the adjusting cam set CMF=1 or 2 and then CMF=0.

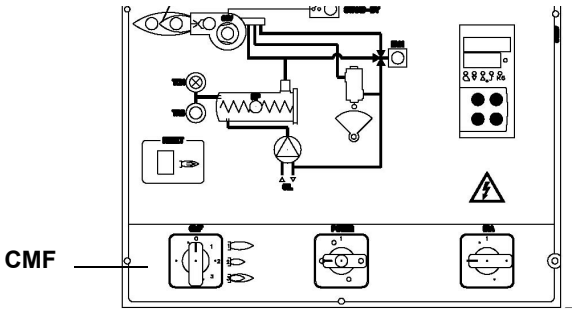

CMF = 0 stop at the current position
CMF = 1 high flame operation
CMF = 2 low flame operation
CMF = 3 automatic operation

Oil circuit

The fuel is pushed into the pump 1 to the nozzle 3 at the delivery pressure set by the pressure governor. The solenoid valve 2 stops the fuel immission into the combustion chamber. The fuel flow rate that is not burnt goes back to the tank through the return circuit. The spill-back nozzle is feeded at constant pressure, while the return line pressure is adjusted by means of the pressure governor controlled by an actuator coupled to an adjusting cam. The fuel amount to be burnt is adjusted by means of the burner actuator according to the adjustments set (see prevoius paragraph).

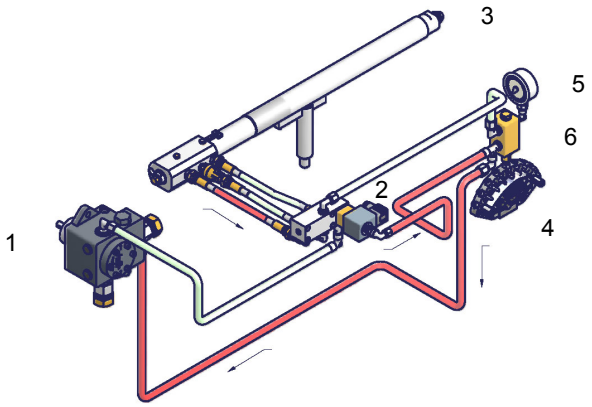

Fig. 22 - Stand-by

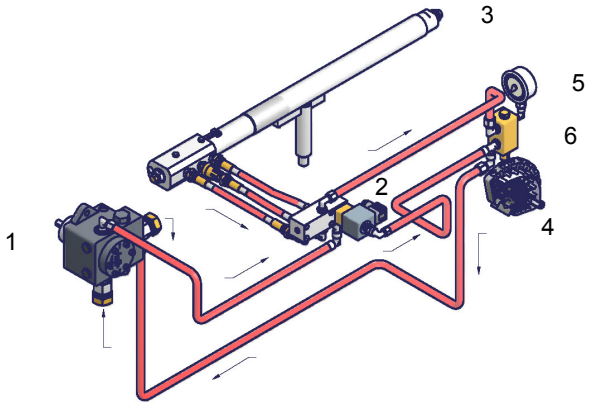

Fig. 23 - Prepurge

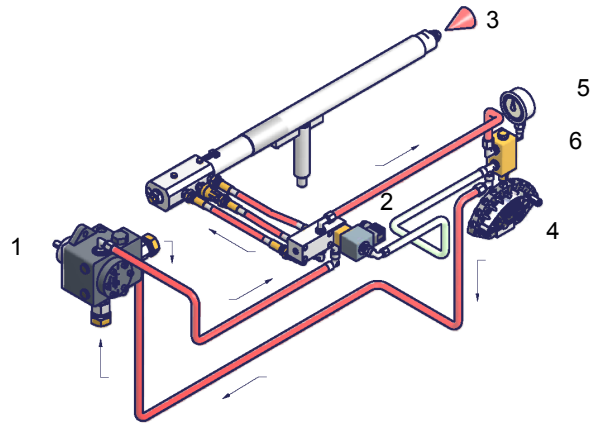

Fig. 24 - Low flame

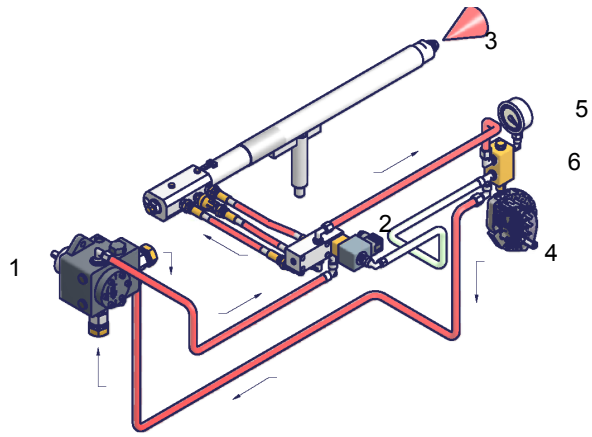

Fig. 25 - High flame

Key

1 Oil pump
2 Oil solenoid valve
3 Nozzle
4 Adjusting cam
5 Pressure gauge
6 Pressure governor

PART II: OPERATION

LIMITATIONS OF USE

THE BURNER IS AN APPLIANCE DESIGNED AND CONSTRUCTED TO OPERATE ONLY AFTER BEING CORRECTLY CONNECTED TO A HEAT GENERATOR (E.G. BOILER, HOT AIR GENERATOR, FURNACE, ETC.), ANY OTHER USE IS TO BE CONSIDERED IMPROPER AND THEREFORE DANGEROUS.

THE USER MUST GUARANTEE THE CORRECT FITTING OF THE APPLIANCE, ENTRUSTING THE INSTALLATION OF IT TO QUALIFIED PERSONNEL AND HAVING THE FIRST COMMISSIONING OF IT CARRIED OUT BY A SERVICE CENTRE AUTHORISED BY THE COMPANY MANUFACTURING THE BURNER.

A FUNDAMENTAL FACTOR IN THIS RESPECT IS THE ELECTRICAL CONNECTION TO THE GENERATOR'S CONTROL AND SAFETY UNITS (CONTROL THERMOSTAT, SAFETY, ETC.) WHICH GUARANTEES CORRECT AND SAFE FUNCTIONING OF THE BURNER.

THEREFORE, ANY OPERATION OF THE APPLIANCE MUST BE PREVENTED WHICH DEPARTS FROM THE INSTALLATION OPERATIONS OR WHICH HAPPENS AFTER TOTAL OR PARTIAL TAMPERING WITH THESE (E.G. DISCONNECTION, EVEN PARTIAL, OF THE ELECTRICAL LEADS, OPENING THE GENERATOR DOOR, DISMANTLING OF PART OF THE BURNER).

NEVER OPEN OR DISMANTLE ANY COMPONENT OF THE MACHINE.

OPERATE ONLY THE MAIN SWITCH, WHICH THROUGH ITS EASY ACCESSIBILITY AND RAPIDITY OF OPERATION ALSO FUNCTIONS AS AN EMERGENCY SWITCH, AND ON THE RESET BUTTON.

IN CASE OF A BURNER SHUT-DOWN, RESET THE CONTROL BOX BY MEANS OF THE RESET PUSHBUTTON. IF A SECOND SHUT-DOWN TAKES PLACE, CALL THE TECHNICAL SERVICE, WITHOUT TRYING TO RESET FURTHER.

WARNING: DURING NORMAL OPERATION THE PARTS OF THE BURNER NEAREST TO THE GENERATOR (COUPLING FLANGE) CAN BECOME VERY HOT, AVOID TOUCHING THEM SO AS NOT TO GET BURNT.

OPERATION

A***TTENTION:*** before starting the burner up, be sure that the manual cutoff valves are open and check that the pressure upstream the gas train complies the value quoted on paragraph "Technical specifications".

N.B. be sure the cutoff valves on the delivery and return pipes are OPEN.

- Turn the burner on by means of its main switch **A** (see next pictures).
- Check that the burner is not locked (LED **E** lights up); if so, reset it by pressing the reset button **N**.
- Check that the series of thermostats (or pressure switches) enable the burner to start up.
- At the beginning of the start-up cycle the servo control drives the air damper to the maximum opening, the fan motor starts and the pre-purge phase begins. During the pre-purge phase the complete opening of the air damper is signalled by the indicator light F on the front panel.
- At the end of the pre-purge the ignition transformer is energised (signalled by the indicator light C on the panel). Two seconds later, the oil valve opens and the ignition transformer is de-energized (light C off).

The burner is now into operation, the servocontrol begins the opening, after few seconds the burner goes to two stages operation and eventually switches to the high flame operation, depending on the needs of the plant (light A, on) or continues with low flame operation (light B, on).

As far as fully-modulating burners, see the Siemens RWF40-50 burner modulator manual.

Control panel

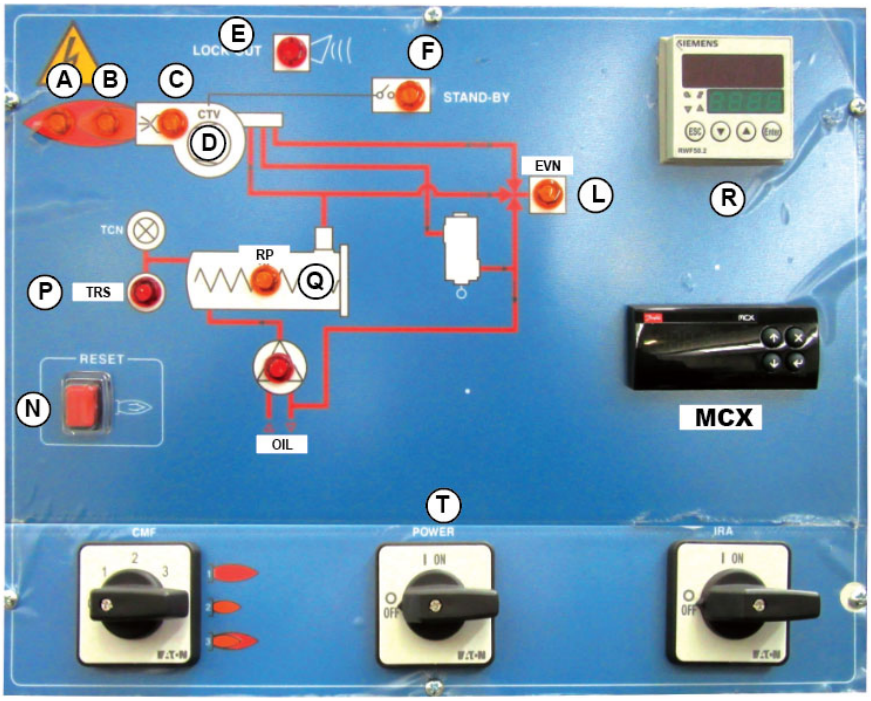

RN510

A High flame lamp
B Low flame lamp
C Ignition transformer operation
CMF Manual operation switch
0= Off 1= High flame
2= Low flame 3= Automatic
D Fan motor thermal cutout intervention
E Burner lockout
F Burner in stand-by
IRA Auxiliary resistors wsitch
L Heavy oil solenoid lamp operation
N Contrlol box reset pushbutton
P Heating resistors safety thermostat
Q Pre-heating tank
R Modulator
T Main switch

RN515 - RN520 - RN525

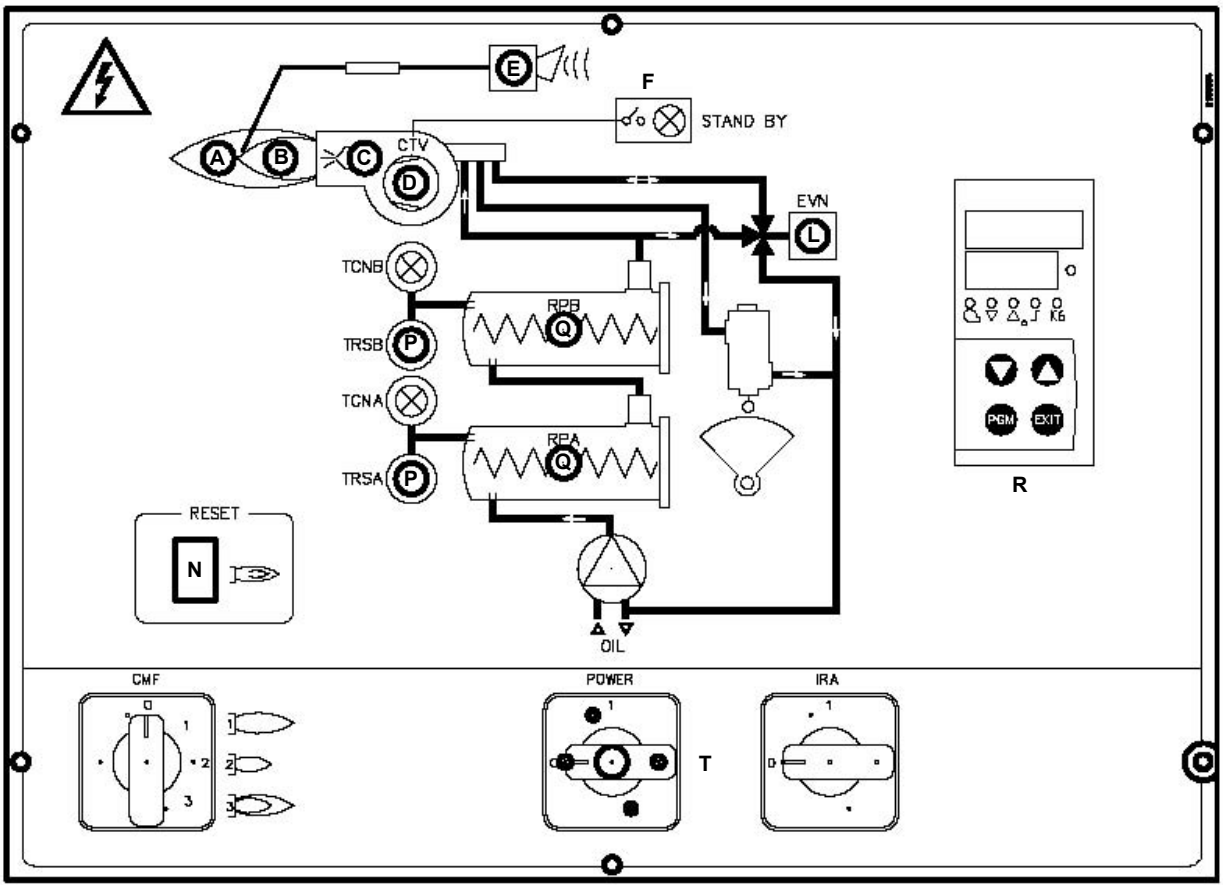

PART III: MAINTENANCE

At least once a year carry out the maintenance operations listed below. In the case of seasonal servicing, it is recommended to carry out the maintenance at the end of each heating season; in the case of continuous operation the maintenance is carried out every 6 months.

WARNING: ALL OPERATIONS ON THE BURNER MUST BE CARRIED OUT WITH THE MAINS DISCONNECTED AND THE FUEL MANAUL CUTOFF VALVES CLOSED!

ATTENTION: READ CAREFULLY THE "WARNINGS" CHAPTER AT THE BEGINNIG OF THIS MANUAL.

ROUTINE MAINTENANCE

- Clean and examine the oil filter cartridge and replace it if necessary.
- Examine the condition of the oil flexible tubing and check for possible leaks.
- Check and clean if necessary the oil heaters and the tank, according to the fuel type and its use; remove the heaters flange fixing nuts and remove the heaters from the tank: clean by using steam or solvents and not metallic things.
- Clean and examine the filter inside the oil pump. Filter must be thoroughly cleaned at least once in a season to ensure correct working of the fuel unit. To remove the filter, unscrew the four screws on the cover. When reassemble, make sure that the filter is mounted with the feet toward the pump body. If the gasket between cover and pump housing should be damaged, it must be replaced. An external filter should always be installed in the suction line upstream of the fuel unit.
- Remove and clean the combustion head (page 32).
- Examine and clean the ignition electrodes, adjust and replace if necessary (see page 33).
- Examine and clean the detection probe, adjust and replace if necessary (see page 34).
- Examine the detection current (see page 32).
- Remove and clean (page 33) the heavy oil nozzle ***(Important: use solvents for cleaning, not metallic tools)*** and at the end of the maintenance procedures, after replacing the burner, turn it on and check the shape of the flame; if in doubt replace the nozzle. Where the burner is used intensively it is recommended to replace the nozzle as a preventive measure, at the begin of the operating season.
- Clean and grease joints and rotating parts.

IMPORTANT:Remove the combustion head before checking the ignition electrodes.

CAUTION: avoid the contact of steam, solvent and other liquids with the electric terminals of the resistor.
On flanged heaters, replace the seal gasket before refitting it.
Periodic inspections must be carried out to determine the frequency of cleaning.

Self-cleaning filter

Fitted only on high viscosity oil burners. Periodically turn the knob to clean the filter.

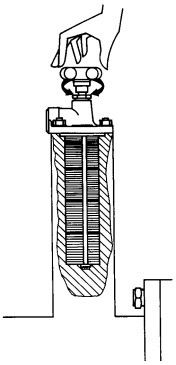

- ***Removing the combustion head***

- Remove the cover H.
- Slide the photoresistor out of its housing.
- Unscrew the oil connections E (Fig. 26) connecting the flexible pipes to the gun L and remove the whole assembly as shown in Fig. 26-Fig. 27.
- clean the combustion head by means of a vacuum cleaner; to scrape off the scale use a metallic brush.

Note: to replace the combustion head reverse the procedure described above.

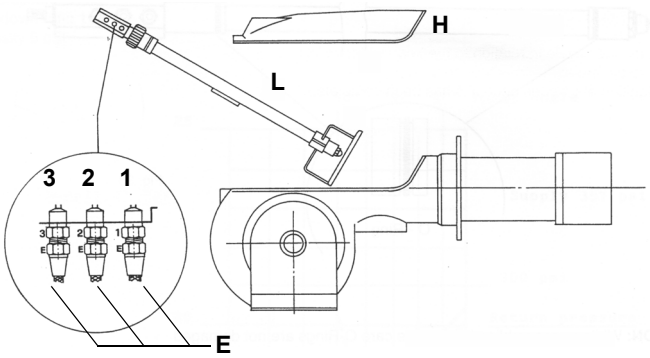

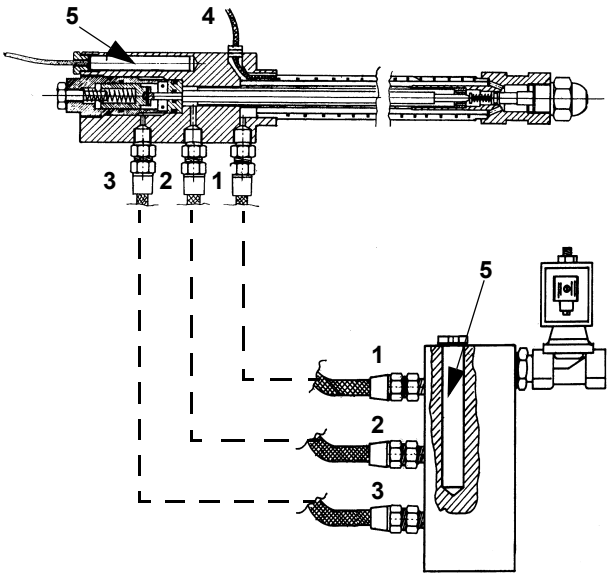

Key

1 Inlet
2 Return
3 Lance opening
4 Heating wire (only on high density oil burners)
5 Cartdrige-type heater
H Cover
L Oil lance
E Oil piping connections

Removing the oil gun, replacing the nozzle and the electrodes

ATTENTION: avoid the electrodes to get in touch with metallic parts (blast tube, head, etc.), otherwise the boiler operation would be compromised. Check the electrodes position after any intervention on the combustion head.

7

To remove the oil gun, proceed as follows:

1 remove the combustion head as described on the prevoius paragraph;

2 loosen the **VL** screw and remove the oil gun and the electrodes: check the oil gun, replace it fi necessary;

3 after removing the oil gun, unscrew the nozzle and replace it if necessary;

4 in order to replace the electrodes, unscrew the **VE** fixing screws and remove them: place the new electrodes being careful to observe the measures showed on pag.: reassemlbe following the reversed procedure.

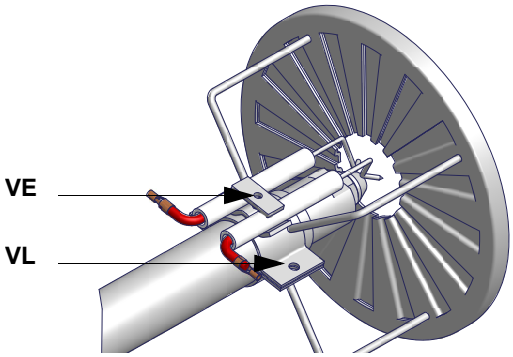

Nozzle and ignition electrodes correct position

Place the nozzle according to the combustion head; unscrew **VB** and move the combustion head. Check the ignition electrodes at the end of the procedure.

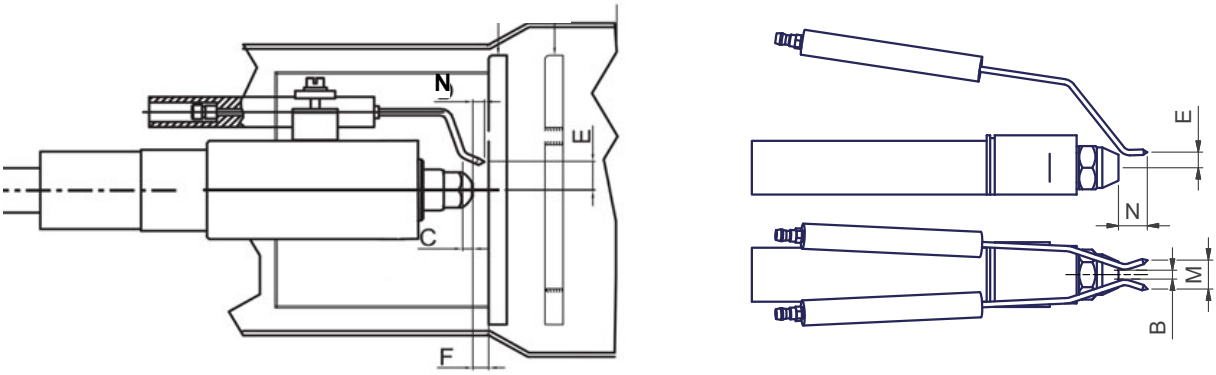

Fig. 26

B	C	M	N	E	F
3 ÷ 5 mm	3 ÷ 4 mm	10 ÷ 15 mm	10 mm	13 mm	8 mm

Checking the detection current

To check the flame itensity signal, follow the diagram shown on the next picture. If the measured value is lower than the suggested one, check the photoresistor position, the electrical contacts. Replace the photoresistor if necessary.

Siemens LAL2.. control box	
Minimum detection current @ 230V	8 µA
Maximum detection current without flame	0.8 µA
Maximum detection current	35 µA

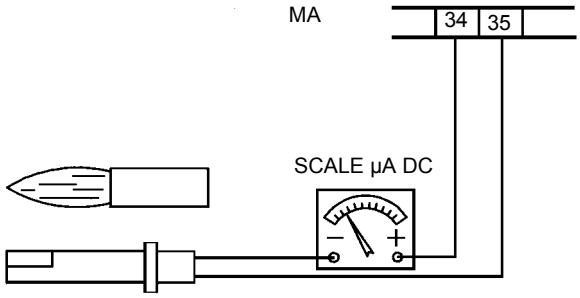

Control box	Flame sensor	Minimum detection signal
LMO44	QRB4	45µA
LAL2..	QRB1	95µA

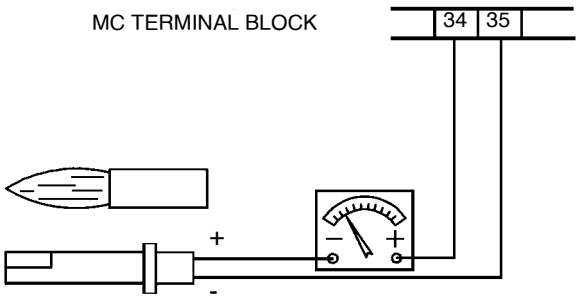

Fig. 27

Cleaning and replacing the detection photoresistor

To clean/replace the photoresistive detector, remove it from its slot. To clean the photoresistor, use a clean cloth, not cleaning sprays.

Seasonal stop

To stop the burner in the seasonal stop, proceed as follows:

1 turn the burner main switch to 0 (Off position)
2 disconnect the power mains
3 close the fuel valve of the supply line

Burner disposal

In case of disposal, follow the instructions according to the laws in force in your country about the “Disposal of materials”.

WIRING DIAGRAMS

Refer to the attached wiring diagrams.

WARNING

1 - Electrical supply 230V 50Hz 1 a.c./400V 50Hz 3N a.c.
2 - Do not reverse phase with neutral
3 - Ensure burner is properly earthed

TROUBLESHOOTING

Heavy oil operation

	THE BURNER DOESN'T START	THE BURNER REPEATS PRE-PURGE	NOISY FUEL PUMP	THE BURNER DOESN'T START AND STOPS	THE BURNER STARTS AND STOPS	THE BURNER DOESN'T SWITCH TO HIGH FLAME	THE BURNER STOPS DURING OPERATION	THE BURNER STOPS AND REPEATS THE CYCLE DURING OPERATION
MAIN SWITCH OPEN	●							
LINE FUSE INTERVENTION	●							
MAX. PRESSURE SWITCH FAULT	●							●
FAN THERMAL CUTOUT INTERVENTION	●							
AUXILIARY RELAIS FUSES INTERVENTION	●							
CONTROL BOX FAULT	●	●		●	●		●	
SERVOCONTROL FAULT						●		
SMOKEY FLAME					●		●	
IGNITION TRANSFORMER FAULT				●				
IGNITION ELECTRODE DIRTY OR WRONG POSITIONED				●				
DIRTY NOZZLE				●			●	
FUEL SOLENOID VALVE DEFECTIVE				●			●	
PHOTORESISTOR DIRTY OR DEFECTIVE					●		●	
HI-LO FLAME THERMOSTAT DEFECTIVE						●		
WRONG POSITION OF SERVOCONTROL CAMS						●		
FUEL PRESSURE TOO LOW				●				
DIRTY FUEL FILTERS			●	●			●	

SIEMENS LAL.. CONTROL BOX

Use

- Control and supervision of oil atomization burners
- For burners of medium to high capacity
- For intermittent operation (at least one controlled shutdown every 24 hours)
- Universally applicable for multistage or modulating burners

Housing and plug-in base

- Made of impact-proof and heat-resistance black plastic
- Lockout reset button with viewing window; located behind it:
- Lockout warning lamp
- Lockout indicator coupled to the spindle of the sequence switch and visible in the transparent lockout reset button
- uses easy-to-remember symbols to indicate the type of fault and the point in time lockout occurred

Base and plug-in section of the LAL... are designed such that only burner controls of the LAL... family can be plugged in.

- 24 connection terminals
- Auxiliary terminals «31» and «32»
- 3 earth terminals terminating in a lug for earthing the burner
- 3 neutral conductor terminals prewired to terminal 2
- 14 knockout holes for cable entry by means of cable glands
- 8 at the side
- 6 in the bottom of the base
- 6 lateral threaded knockout holes for cable entry glands Pg11 or M20

Operation

Flame detector and flame simulation test are made automatically during burner off times and the prepurge time «t1». If loss of flame occurs during operation, the burner control will initiate lockout. If automatic repetition of the startup sequence is required, the clearly marked wire link on the plug-in section of the LAL... must be cut away.

Pre-conditions for burner startup

- Burner control is not in the lockout position
- Sequence switch is in its start position (with LAL2 voltage is present at terminals 11 and 12.
- Air damper is closed; end switch «z» for the CLOSED position must feed power from terminal 11 to terminal8.
- Contact of the limit thermostat or pressure switch «W» and the contacts of any other switching devices in the control loop between terminals 4 and 5 must be closed e.g. a control contact for the oil preheater's temperature
- Normally closed contact of the air pressure switch must be closed.

Startup sequence

Start command by «R»:

«R» closes the start control loop between terminals 4 and 5

- The sequence switch starts to run
- Only prepurging, fan motor at terminal 6 receives power
- Pre- and postpurging, fan motor or flue gas fan at terminal 7 receives power on completion of «t7»
- On completion of «t16», the control command for opening the air damper is delivered via terminal 9
- Terminal 8 receives no power during the positioning time
- The sequence switch continues to run only after the air damper has fully closed.

t1 Prepurge time with air damper fully open:

- The correct functioning of the flame supervision circuit is checked during «t1»
- The burner control will initiate lockout if correct functioning is not ensured.

With LAL2:

Shortly after the beginning of «t1», the air pressure switch must change over from terminal 13 to terminal 14 otherwise, the burner control will initiate lockout start of the air pressure check.

t3 Short preignition time:

«Z» must be connected to terminal 16, release of fuel via terminal 18.

t3' Long preignition time: «Z» connected to terminal 15.

t3n Postignition time:

- «Z» must be connected to terminal 15

- With short preignition, «Z» remains on until «TSA» has elapsed connection to terminal 16.

t4 Interval «BV1 – BV2» or «BV1 - LR»: On completion of «t4», voltage is present at terminal 19. The voltage is required to power «BV2» connected to auxiliary switch «v» in the actuator.

t5 Interval: On completion of «t5», terminal 20 receives power. At the same time, control outputs 9 to 11 and input 8 are galvanically separated from the LAL...'s control section.

LAL... is now protected against reverse voltages from the load control circuit. With the release of «LR» at terminal 20, the startup sequence of the LAL... ends. After a few idle steps (steps with no contact position changes), the sequence switch switches itself off.

B Operating position of the burner

B-C Burner operation: during burner operation, «LR» drives the air damper to the nominal load or low-fire position, depending on heat demand; the release of the nominal load takes place via auxiliary switch «v» in the actuator and in the event of loss of flame during operation, the LAL... will initiate lockout. For automatic start repetition, the clearly marked wire link «B» on the plugin section of the LAL... must be cut away.

C Controlled shutdown: in the case of controlled shutdown, «BV...» will immediately be closed. At the same time, the sequence switch is started to program «t6»

C-D Sequence switch travels to start position «A»

t6 Postpurge time: fan «M2» connected to terminal 7. Shortly after the start of «t6», terminal 10 receives power and the air damper is driven to the MIN position. Full closing of the air damper starts only shortly before «t6» has elapsed initiated by the control signal at terminal 11. During the following burner off time, terminal 11 is live.

t13 Permissible afterburn time: during «t13», the flame signal input may still receive a flame signal.

D-A End of control program: start position

As soon as the sequence switch has reached the start position – having thereby switched itself off – the flame detector and flame simulation test will start again.

During burner off times, the flame supervision circuit is live.

Lockout and indication of the stop position

Whenever a fault occurs, the sequence switch stops and with it the lockout indicator. The symbol appearing above the reading mark indicates the type of fault:

◀ No start. One of the contacts is not closed (also refer to «Preconditions for burner startup»):

Extraneous light:

Lockout during or after completion of the control program

Examples: nonextinguished flame, leaking fuel valves faulty flame supervision circuit.

▲ Interruption of startup. No OPEN signal at terminal 8 from the changeover end switch «a». Terminals 6, 7 and 15 are live until fault has been corrected

P Lockout**.** No air pressure indication at the beginning of the air pressure check. Air pressure failure after the air pressure check.

■ Defect in the flame supervision circuit.

▼ Interruption of the startup sequence. No positioning signal at terminal 8 from the auxiliary switch «m» for the low-fire position. Terminals 6, 7 and 15 are live until fault has been corrected.

1 Lockout. No flame signal at the end of the safety time.

| Flame signa has been lost during operation.

A Consenso all'avviamento (ad esempio tramite il termostato o il pressostato R dell'impianto

B Operating position of the burner

B-C Burner operation: during burner operation, «LR» drives the air damper to the nominal load or low-fire position, depending on heat demand; the release of the nominal load takes place via auxiliary switch «v» in the actuator and in the event of loss of flame during operation, the LAL... will initiate lockout. For automatic start repetition, the clearly marked wire link «B» on the plugin section of the LAL... must be cut away.

C Controlled shutdown: in the case of controlled shutdown, «BV...» will immediately be closed. At the same time, the sequence switch is started to program «t6»

C-D Sequence switch travels to start position «A».

During burner off times, the flame supervision circuit is live.

Lockout indication

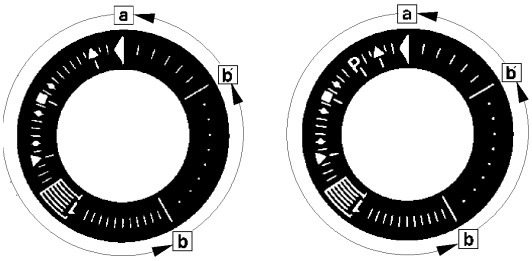

a-b Startup sequence
b-b' Idle step (with no contact confirmation)
b(b')-a Postpurge program

Burner control can immediately be reset after lockout:
Do not press the lockout reset button for more than 10 seconds
The sequence switch always travels to the start position first
After resetting
After rectification of a fault that led to shutdown
After each power failure
During this period of time, power is only fed to terminals 7 and 9...11.
Then, the LAL.... will program a new burner startup sequence

Specifications

Power supply	AC 230 V -15 / +10 %
for LAL2... on request AC 100 V -15 %...AC 110 V +10 %	
Frequency	50 Hz -6 %...60 Hz +6 %
Absorption	AC 3.5 VA
Mounting position	optional
Protection	IP 40
Perm. input current at terminal 1	AC 5 A max., 20 A peak
Perm. current rating of control terminals 3, 6, 7, 9...11, 15...20	4 A max., 20 A peak
Internal fuse	T6,3H250V according to IEC 127
External fuse	max. 10 A
Weight	Device 1000 g Plug-in base 165 g

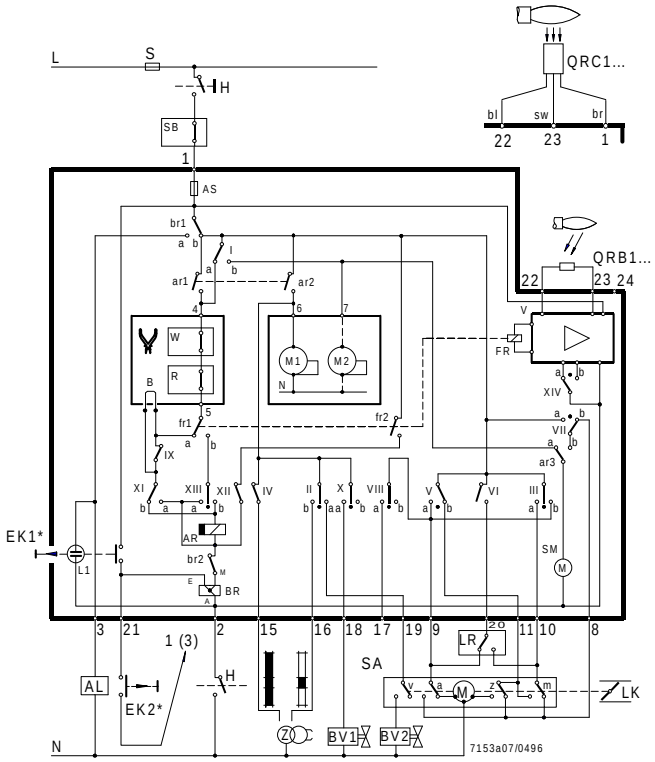

Sequence diagram

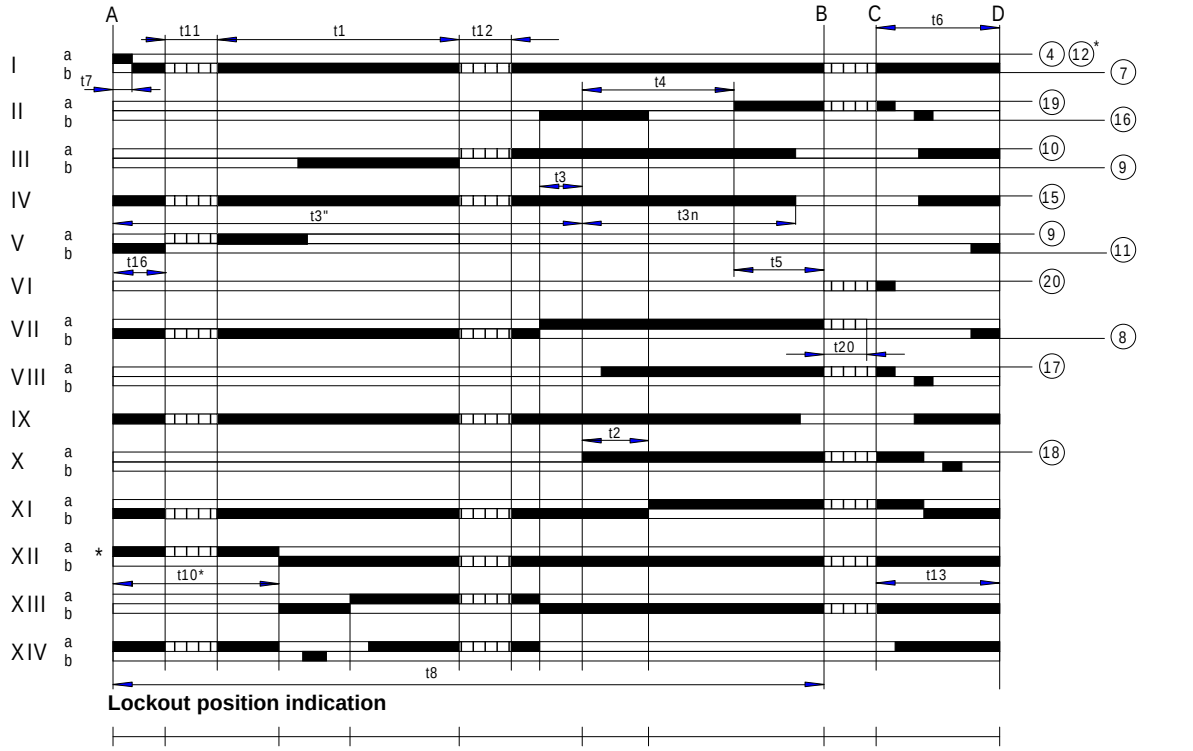

Key

t1 Prepurge time with air damper fully open
t2 Safety time
t3 Preignition time, short («Z» connected to terminal 16)
T3' Preignition time, long («Z» connected to terminal 15)
t3n Postignition time («Z» connected to terminal 15)
t4 Interval between voltage at terminals 18 and 19 («BV1-BV2»)
t5 Interval between voltage at terminals 19 and 20 («BV2» load controller)

t6	Postpurge time (with «M2»)
t7	Interval between start command and voltage at terminal 7 (start delay time for «M2»)
t8	Duration of startup sequence (excluding «t11» and «t12»)
t10	Interval from startup to the beginning of the air pressure check
t11	Air damper running time to the OPEN position
t12	Air damper running time to the low-fire position (MIN)
t13	Permissible afterburn time
t16	Interval to the OPEN command for the air damper
t20	For self-shutdown of the sequence switch

USER MANUAL OF MULTI-THERMOSTAT

MCX06C

MCX06C is a multi-thermostat with four 100k NTC inputs. It can control up to 4 temperatures showing them (not more than 2 at the same time) on a couple of displays.
It is used to check and adjust oil heater temperatures.

User interface:
Device:

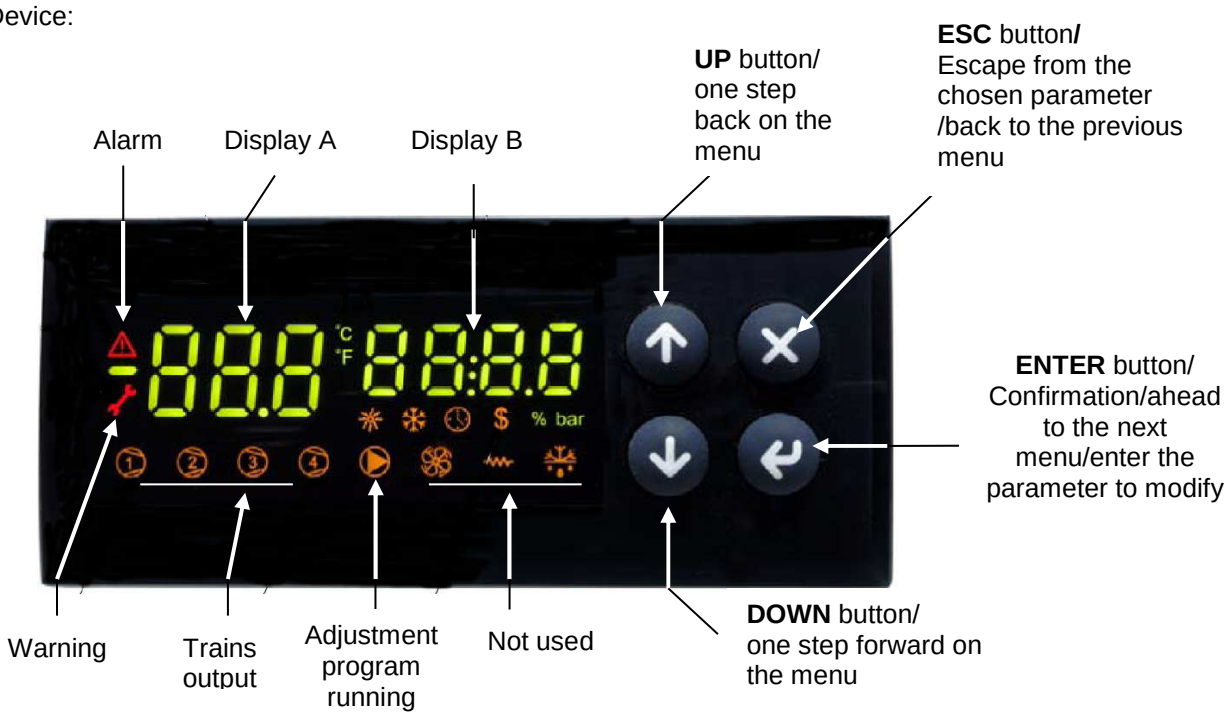

Note :
In normal operation, the display A shows the oil tank resistor temperature (probe Pb1).
In normal operation, the display B shows the oil output temperature (probe Pb3).

Connections from terminal side:

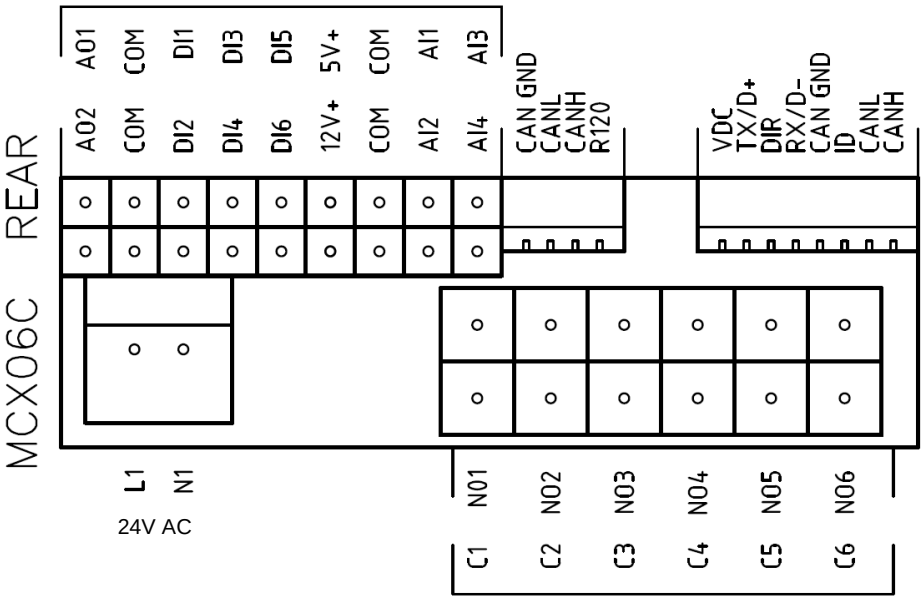

Probe connection:
input **AI1** = probe **Pb1** = set-point "**tr**" = oil heater temperature probe;
input **AI2** = probe **Pb2** = set-point "**tCI**" = plant consent temperature probe (when installed);
input **AI3** = probe **Pb3** = set-point "**OIL**" = oil heater output temperature probe (PID regulation);
input **AI4** = probe **Pb4** = set-point "**tcn**" = oil heater consent temperature probe.

Menu:
To enter the menu below, keep pushing **ENTER** for more than 3 s.

Menu code	Sub-menu code	Function	Notes
Prb		Probes values	You can see in sequence the 4 probe values (UP and DOWN keys): the probe code is on display A (Pb1,..., Pb4) and the probe value is on display B (not fitted or out of work probes show "----").
Log		Login	It defines the access level to menu and parameters (password)
	PAS	Password	Password input
Par		Parameters menu	Access to parameters (you have to login first)
	CnF	Configuration menu	Parameter configuration
	rEG	Regulation menu	Set to set-point, probe, thresholds etc.
ALA		Alarm menu	Access to alarm management
	Act	Active alarms	Show the active alarms
	rES	Reset alarms & Warning	Reset of the manual reset alarms and warning
Loc		Lock/Unlock functions	Not used
InF	rEL	Software version	Installed software version
tUN		Autotuning	Activation On, deactivation ESC PID parameter autotuning

Alarms & Warning:
When the red triangle on the top left lights, one or more alarms are activated.
When the red key on the left lights, the output N05-C5 is active and the relay **KTRS** switches the resistors OFF.
Check the reason, correct the failure and, as soon as the temperature is lower than **trS**, reset it through **ALA/rES .**
In order to show active alarms and warnings, select the relevant menu through **ALA/Act**.and, using the **UP** and **DOWN** buttons, scroll the lines.
In order to perform the manual reset, select **ALA/rES**.

Code	Description	Sourse	Active simbol	Reset type
trS	High temperature resistors alarm	probe Pb4 > value trS	red key	Manual
EP1	Probe Pb1 fault	Probe Pb1 fault	red triangle	Automatic
EP2	Probe Pb2 fault	Probe Pb2 fault	red triangle	Automatic
EP3	Probe Pb3 fault	Probe Pb3 fault	red triangle	Automatic
EP4	Probe Pb4 fault	Probe Pb4 fault	red triangle	Automatic

Set point adjustment:
All the parameters inside the **Par** menu are locked by a password.
The user can modify only set points (menu **rEG**), without using any passwords.
The oil viscosity at the nozzle, should be about 1,5°E, which guarantees correct and safe functioning of the burner.
The temperature values in the table, guarantee the respect of that parameter and are valid when the pre heating tank is installed on the burner. For different configurations , please refer to the chapter "Recommendations to design heavy oil feeding plants" in the burner manual.
Here below recommended set points:

Menu path				Oil viscosity at 50 °C according to the letter show n in the burner model				
				P	**N**	**E**	**D**	**H**
				89 cSt	< 50 cSt	> 50 cSt < 110 cSt	> 110 cSt < 400 cSt	> 400 cSt < 4000 cSt
				12 °E	< 7°E	> 7 °E < 15 °E	> 15 °E < 50 °E	> 50 °E < 530 °E
Par								
rEG	Pb1	tr	Oil heater temperature probe	parameter not visible				
	Pb2	tCI	Plant consent temperature probe (when installed)	20 °C	70 °C	70 °C	70 °C	---
	Pb3	Oil	oil heater output temperature probe (PID regulation);	60-70 °C	110-120 °C	120-130 °C	130-140 °C	140-150 ° C
		SP0	Set-point oil heater with oil pump stopped (stand-by)	45 °C	120 °C	130 °C	140 °C	150 °C
	Pb4	tcn	Oil heater consent temperature probe	40 °C	100 °C	100 °C	110 °C	120 °C
		trS	Safety temperature tank resistors (manual reset)	120 °C	190-200 °C	190-200 °C	190-200 °C	190-200 °C

The above temperature values are suggested and refer to a plant designed according to the prescriptions in the burner user manual. The suggested values can change in reference to the fuel oil specifications.

C.I.B. UNIGAS S.p.A.
Via L.Galvani, 9 - 35011 Campodarsego (PD) - ITALY
Tel. +39 049 9200944 - Fax +39 049 9200945/9201269
web site: www.cibunigas.it - e-mail: cibunigas@cibunigas.it

Note: specifications and data subject to change. Errors and omissions excepted.

USER MANUAL OF MULTI-THERMOSTAT

MCX06C

MCX06C is a multi-thermostat with four 100k NTC inputs. It can control up to 4 temperatures showing them (not more than 2 at the same time) on a couple of displays.
It is used to check and adjust oil heater temperatures.

User interface:
Device:

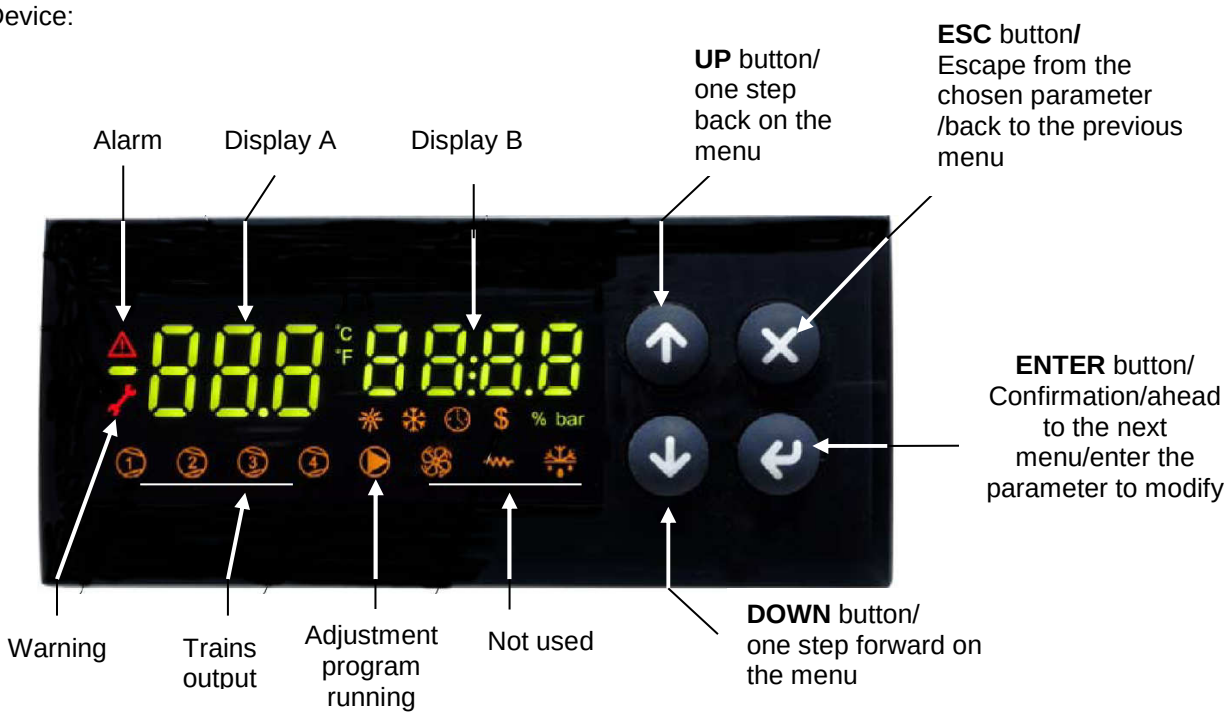

Note :
In normal operation, the display A shows the oil tank resistor temperature (probe Pb1).
In normal operation, the display B shows the oil output temperature (probe Pb3).

Connections from terminal side:

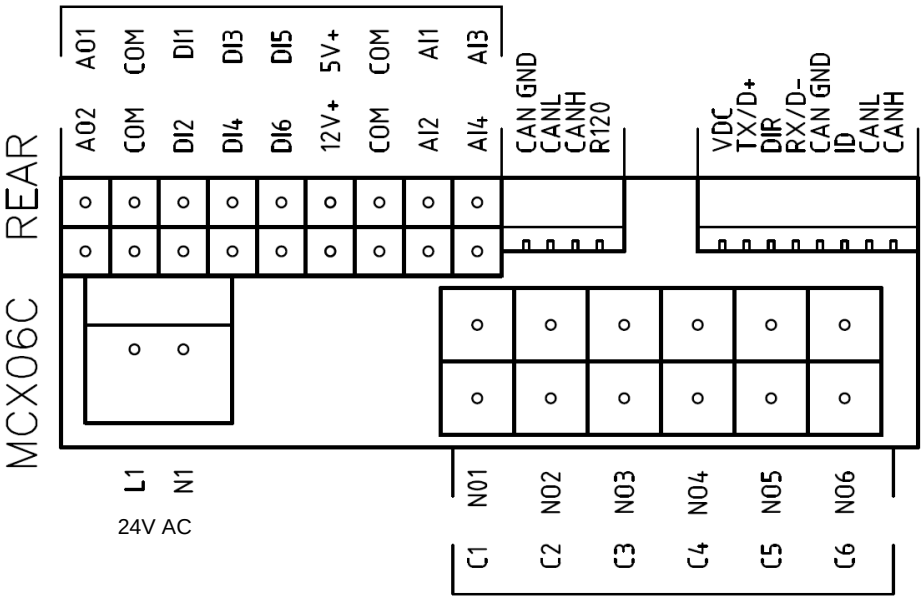

Probe connection:
input **AI1** = probe **Pb1** = set-point "**tr**" = oil heater temperature probe;
input **AI2** = probe **Pb2** = set-point "**tCI**" = plant consent temperature probe (when installed);
input **AI3** = probe **Pb3** = set-point "**OIL**" = oil heater output temperature probe (PID regulation);
input **AI4** = probe **Pb4** = set-point "**tcn**" = oil heater consent temperature probe.

Menu:
To enter the menu below, keep pushing **ENTER** for more than 3 s.

Menu code	Sub-menu code	Function	Notes
Prb		Probes values	You can see in sequence the 4 probe values (UP and DOWN keys): the probe code is on display A (Pb1,..., Pb4) and the probe value is on display B (not fitted or out of work probes show "----").
Log		Login	It defines the access level to menu and parameters (password)
	PAS	Password	Password input
Par		Parameters menu	Access to parameters (you have to login first)
	CnF	Configuration menu	Parameter configuration
	rEG	Regulation menu	Set to set-point, probe, thresholds etc.
ALA		Alarm menu	Access to alarm management
	Act	Active alarms	Show the active alarms
	rES	Reset alarms & Warning	Reset of the manual reset alarms and warning
Loc		Lock/Unlock functions	Not used
InF	rEL	Software version	Installed software version
tUN		Autotuning	Activation On, deactivation ESC PID parameter autotuning

Alarms & Warning:
When the red triangle on the top left lights, one or more alarms are activated.
When the red key on the left lights, the output N05-C5 is active and the relay **KTRS** switches the resistors OFF.
Check the reason, correct the failure and, as soon as the temperature is lower than **trS**, reset it through **ALA/rES .**
In order to show active alarms and warnings, select the relevant menu through **ALA/Act**.and, using the **UP** and **DOWN** buttons, scroll the lines.
In order to perform the manual reset, select **ALA/rES**.

Code	Description	Sourse	Active simbol	Reset type
trS	High temperature resistors alarm	probe Pb4 > value trS	red key	Manual
EP1	Probe Pb1 fault	Probe Pb1 fault	red triangle	Automatic
EP2	Probe Pb2 fault	Probe Pb2 fault	red triangle	Automatic
EP3	Probe Pb3 fault	Probe Pb3 fault	red triangle	Automatic
EP4	Probe Pb4 fault	Probe Pb4 fault	red triangle	Automatic

Set point adjustment:
All the parameters inside the **Par** menu are locked by a password.
The user can modify only set points (menu **rEG**), without using any passwords.
The oil viscosity at the nozzle, should be about 1,5°E, which guarantees correct and safe functioning of the burner.
The temperature values in the table, guarantee the respect of that parameter and are valid when the pre heating tank is installed on the burner. For different configurations , please refer to the chapter "Recommendations to design heavy oil feeding plants" in the burner manual.
Here below recommended set points:

Menu path				Oil viscosity at 50 °C according to the letter show n in the burner model				
				P	**N**	**E**	**D**	**H**
				89 cSt	< 50 cSt	> 50 cSt < 110 cSt	> 110 cSt < 400 cSt	> 400 cSt < 4000 cSt
				12 °E	< 7°E	> 7 °E < 15 °E	> 15 °E < 50 °E	> 50 °E < 530 °E
Par								
rEG	Pb1	tr	Oil heater temperature probe	parameter not visible				
	Pb2	tCI	Plant consent temperature probe (when installed)	20 °C	70 °C	70 °C	70 °C	---
	Pb3	Oil	oil heater output temperature probe (PID regulation);	60-70 °C	110-120 °C	120-130 °C	130-140 °C	140-150 ° C
		SP0	Set-point oil heater with oil pump stopped (stand-by)	45 °C	120 °C	130 °C	140 °C	150 °C
	Pb4	tcn	Oil heater consent temperature probe	40 °C	100 °C	100 °C	110 °C	120 °C
		trS	Safety temperature tank resistors (manual reset)	120 °C	190-200 °C	190-200 °C	190-200 °C	190-200 °C

The above temperature values are suggested and refer to a plant designed according to the prescriptions in the burner user manual. The suggested values can change in reference to the fuel oil specifications.

CIB UNIGAS 600V

CONTROLLER

USER'S MANUAL

COD. M12925CA Rel 1.2 08/2014

SOFTWARE VERSION **1.0x T73**
code **80379** / Edition **01 - 06/2012**

1 • INSTALLATION

• Dimensions and cut-out; panel mounting

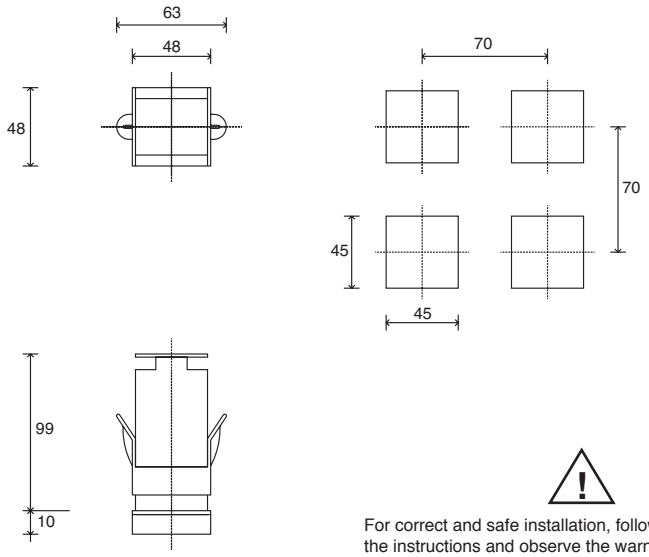

For correct and safe installation, follow the instructions and observe the warnings contained in this manual.

Panel mounting:
To fix the unit, insert the brackets provided into the seats on either side of the case.
To mount two or more units side by side, respect the cut-out dimensions shown in the drawing.

CE MARKING: The instrument conforms to the European Directives 2004/108/CE and 2006/95/CE with reference to the generic standards: **EN 61000-6-2** (immunity in industrial environment) **EN 61000-6-3** (emission in residential environment) **EN 61010-1** (safety).
MAINTENANCE: Repairs must be done only by trained and specialized personnel.
Cut power to the device before accessing internal parts.
Do not clean the case with hydrocarbon-based solvents (Petrol, Trichlorethylene, etc.). Use of these solvents can reduce the mechanical reliability of the device. Use a cloth dampened in ethyl alcohol or water to clean the external plastic case.
SERVICE: GEFRAN has a service department. The warranty excludes defects caused by any use not conforming to these instructions.

EMC conformity has been tested with the following connections

FUNCTION	CABLE TYPE	LENGTH
Power supply cable	1 mm²	1 m
Relay output cable	1 mm²	3,5 m
TC input	0,8 mm² compensated	5 m
Pt100 input	1 mm²	3 m

2 • TECHNICAL SPECIFICATIONS

Display	2x4 digit green, high display 10 and 7mm
Keys	4 of mechanical type (Man/Aut, INC, DEC, F)
Accuracy	0.2% f.s. ±1 digit ambient temperature 25°C
Main input (settable digital filter)	TC, RTD, PTC, NTC 60mV,1V Ri≥1MΩ; 5V,10V Ri≥10KΩ; 20mA Ri=50Ω Tempo di campionamento 120 msec.
Type TC Thermocouples (ITS90)	Type TC Thermocouples : J,K,R,S,T (IEC 584-1, CEI EN 60584-1, 60584-2) ; custom linearization is available / types B,E,N,L GOST,U,G,D,C are available by using the custom linearization.
Cold junction error	0,1° / °C
RTD type (scale configurable within indicated range, with or without decimal point) (ITS90) *Max line resistance for RTD*	DIN 43760 (Pt100), JPT100 20Ω
PTC type / NTC Type	990Ω, 25°C / 1KΩ, 25°C
Safety	detection of short-circuit or opening of probes, LBA alarm
°C / °F selection	configurable from faceplate
Linear scale ranges	-1999 to 9999 with configurable decimal point position
Controls	PID, Self-tuning, on-off
pb - dt - it	0,0...999,9 % - 0,00...99,99 min - 0,00...99,99 min
Action	Heat / Cool
Control outputs	on / off
Maximum power limit heat / cool	0,0...100,0 %
Cycle time	0...200 sec
Main output type	relay, logic, continuous (0...10V Rload ≥ 250KΩ, 0/4...20mA Rload ≤ 500Ω)
Softstart	0,0...500,0 min
Fault power setting	-100,0...100,0 %
Automatic blanking	Displays PV value, optional exclusion
Configurable alarms	Up to 3 alarm functions assignable to an output, configurable as: maximum, minimum, symmetrical, absolute/deviation, LBA
Alarm masking	- exclusion during warm up - latching reset from faceplate or external contact
Type of relay contact	NO (NC), 5A, 250V/30Vdc cosφ=1
Logic output for static relays	24V ±10% (10V min at 20mA)
Transmitter power supply	15/24Vdc, max 30mA short-circuit protection
Power supply (switching type)	(std) 100 ... 240Vac ±10% (opt.) 11...27Vac/dc ±10%; 50/60Hz, 8VA max
Faceplate protection	IP65
Working / Storage temperature range	0...50°C / -20...70°C
Relative humidity	20 ... 85% non-condensing
Environmental conditions of use	for internal use only, altitude up to 2000m
Installation	Panel, plug-in from front
Weight	160g for the complete version

3 • DESCRIPTION OF FACEPLATE

Function indicators
Indicates modes of operation

L1 MAN/AUTO = OFF (automatic control)
ON (manual control)

L2 PRE-HEATING = ON (running)

L3 SELFTUNING = ON (enabled Self)
OFF (disabled Self)

Automatic/Manual adjustment selection
Active only when PV display visualises the process variable (button pressed for at least 5 sec.)

Indication of output states
OUT 1 (AL1); OUT 2 (OPEN); OUT 3 (CLOSED)

PV Display: Indication of process variable
Error Indication: LO, HI, Sbr, Err
LO= the value of process variable is < di LO_S
HI= the value of process variable is > di HI_S
Sbr= faulty sensor or input values higher than max. limits
Err= PT100 third wire opened for PT100, PTC or input values lower than min. limits (i.e.: TC wrong connection)

SV display: Indication of setpoint

Function key
Gives access to the various configuration phases •• Confirms change of set parameters and browses next or previous parameter (if Auto/Man key is pressed)

"Inc" and "Dec" key
Press to increment (decrement) any numerical parameter •• Increment (decrement) speed is proportional to time key stays pressed •• The operation is not cyclic: once the maximum (minimum) value of a field is reached, the value will not change even if the key remains pressed.

4 • CONNECTIONS

• Outputs

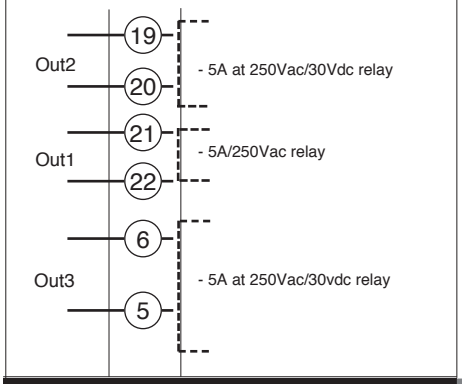

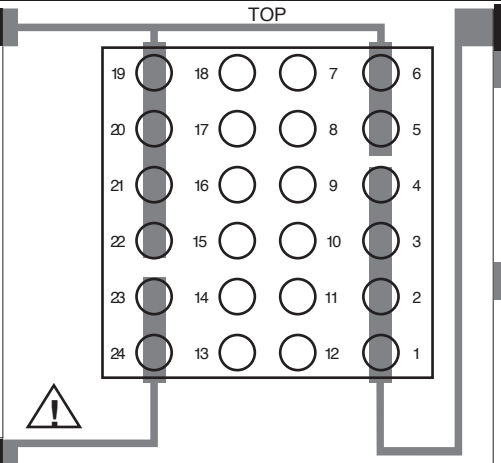

• Power Supply

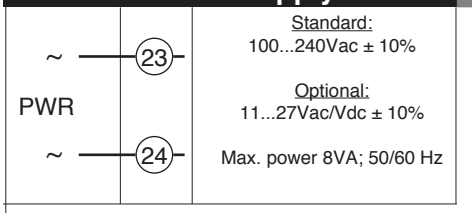

• Inputs

• TC Input

Available thermocouples:
J, K, R, S, T
(B, E, N, L, U, G, D, C custom linearization is available)
- Observe polarities
- For extensions, use the correct compensating cable for the type of TC used

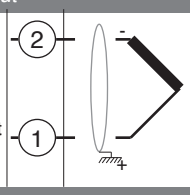

• Linear input with 3-wire transmitter

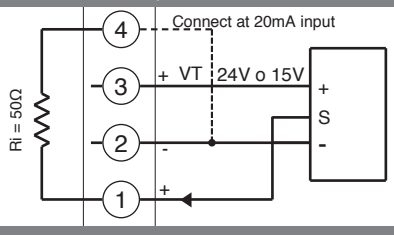

• Linear input (I)

Linear input in dc current
20mA, Ri = 50Ω

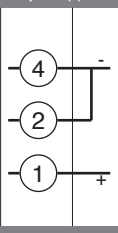

• Input 1 linear with transmitter 2 wires

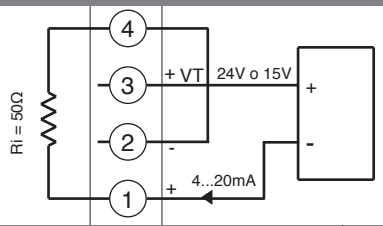

• Linear input (V)

Linear input in dc voltage
60mV, 1V
Ri > 1MΩ
5V, 10V
Ri > 10KΩ

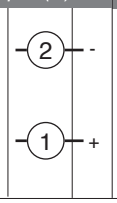

• Pt100 / PTC / NTC

Use wires of adequate diameter (min. 1mm²)
PT100, JPT100, PTC, NTC

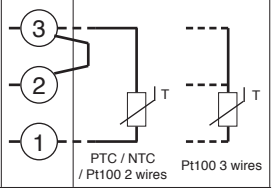

• Identification of boards

Power board - Solder side

Select transmitter voltage

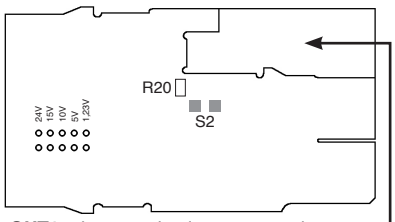

N.B. : you can keep the **OUT1** relay energized at power-up by inserting jumper **S2** and removing resistance **R20**.

CPU board - Component side

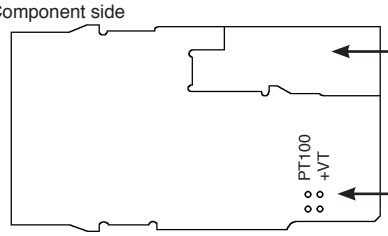

IN/OUT boards
(see appendix)

Select signal at contact 3

• Device structure

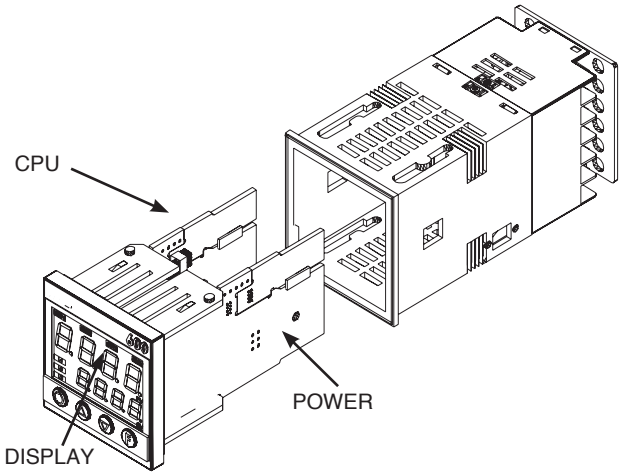

5 • "EASY" PROGRAMMING and CONFIGURATION

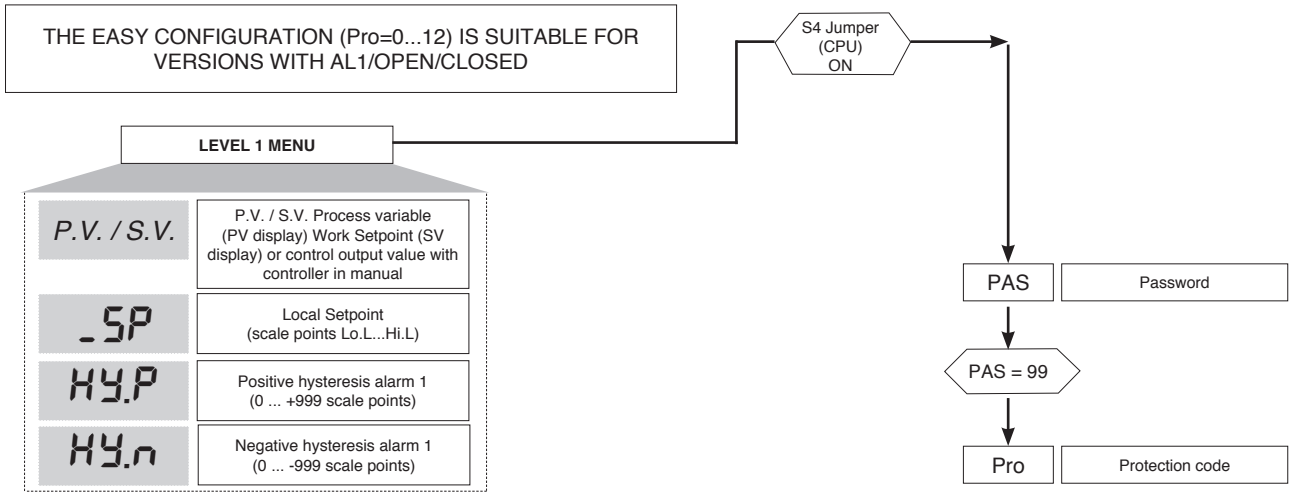

• Prot

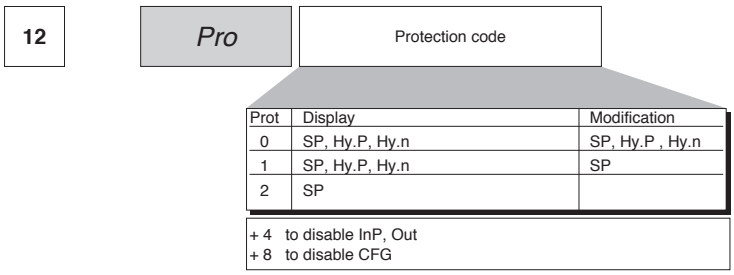

Prot	Display	Modification
0	SP, Hy.P, Hy.n	SP, Hy.P , Hy.n
1	SP, Hy.P, Hy.n	SP
2	SP	

6 • PROGRAMMING and CONFIGURATION

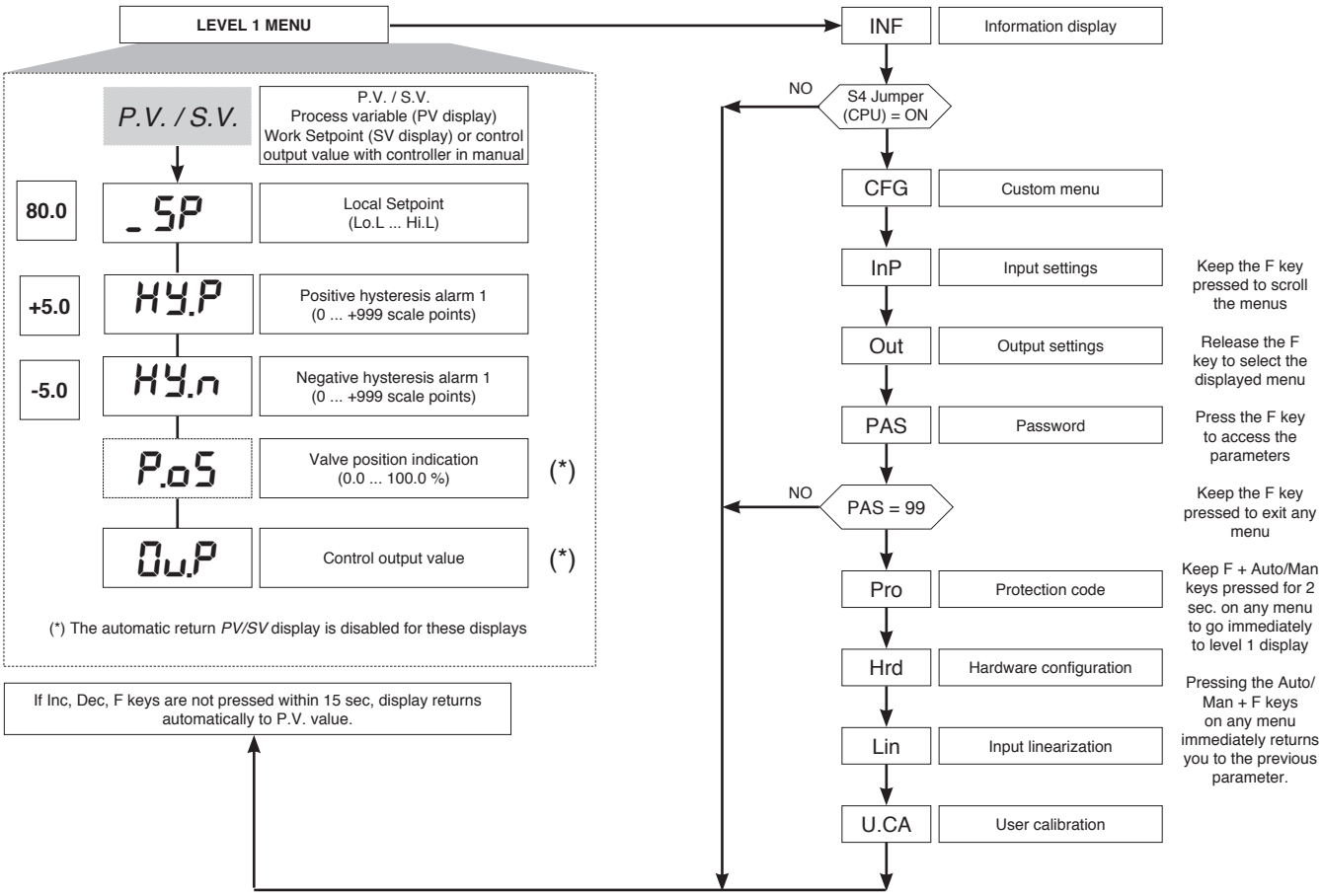

N.B.: Once a particular configuration is entered, all unnecessary parameters are no longer displayed

• InFo Display

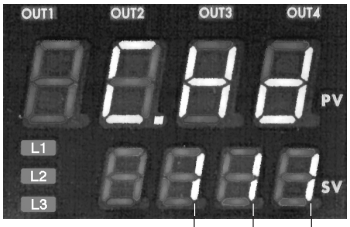

OUTPUT 2
0 = None
1 = Relay

OUTPUT 3
0 = None
1 = Relay

SERIAL COMMUNICATION
0 = None

	INF	Information display
	UPd	Software version
	Err	Self diagnostic error code
110	C.Hd	Configuration hrd

0	No Error
1	Lo
2	Hi
3	ERR
4	SBR

+8 error OUT2 card recognition
+16 error OUT3 card recognition

• CFG

	CFG	Control parameters
0	S.tu	Enabling self-tuning, autotuning, softstart
1.2	h.Pb	Proportional band for heating or hysteresis in regulation ON/OFF — 0 ... 999.9% f.s.
5.83	h. It	Integral time for heating — 0.00 ... 99.99 min
1.33	h.dt	Derivative time for heating — 0.00 ... 99.99 min
100.0	h.P.H	Maximum power limit for heating — 0.0 ... 100.0%
0.0	h.P.L	Minimum power limit for heating (not available for double heat/ cool action) — 0.0 ... 100.0%

S.tun	Continuous autotuning	Sel-ftuning	Softstart
0	NO	NO	NO
1	YES	NO	NO
2	NO	YES	NO
3	YES	YES	NO
4	NO	NO	YES
5	YES	NO	YES
6	-	-	-
7	-	-	-

S.tun	Autotuning one shot	Selftuning	Softstart
8*	WAIT	NO	NO
9	GO	NO	NO
10*	WAIT	YES	NO
11	GO	YES	NO
12*	WAIT	NO	YES
13	GO	NO	YES

(*) +16 with passage automatic rifle in GO if PV-SP > 0,5%
+32 with passage automatic rifle in GO if PV-SP > 1%
+64 with passage automatic rifle in GO if PV-SP > 2%
+128 with passage automatic rifle in GO if PV-SP > 4%

0	r.St	Manual reset	-999 ... 999 punti scala
0.0	P.r.S	Reset power	-100.0 ... 100.0%
0	A.r.S	Antireset	0 ... 9999 scale points
0.0	FFd	Feedforward	-100.0 ... 100.0%
0.0	SoF	Softstart time	0.0 ... 500.0 min
0.0	L.b.t	Waiting time for LBA alarm intervention (Set to "0" to disable LBA alarm)	0.0 ... 500.0 min (*)
0.0	L.b.P	Power limit for LBA alarm condition	-100.0 ... 100.0% (*)
0.0	FA.P	Power output in fault condition (when probe is faulty)	-100.0 ... 100.0% ON / OFF
0.0	G.SP	Set gradient (see applicable note)	0.0...999.9 digit/min. (digit / sec see SP.r)
0.0	G.S0	Setpoint gradient of pre-heating	0.0 ... 999.9 digit / min. (digit / sec seeSP.r)
0	Ht.0	Retention time of pre-heating setpoint	0 … 200 min. (sec see SP.r)
0.0	SP.0	Setpoint of pre-heating	Lo.L … Hi.L
0.0	G.S 1	Set gradient at the end of the pre-heating	0.0 ... 999.9 digit / min. (digit / sec see SP.r)

(*) LBA alarm may be reset by simultaneously pressing Δ + ∇ keys when OutP is displayed or by switching to Manual.

• InP

InP — Input settings

0 — SP.r — Def. remote setpoint — 0 default (remote setpoint present)

+2 Times of pre-heating and gradients of set digit/sec

30 — tYP. — Probe type, signal, enable custom linearization, and main input scale

Type	Probe type	without decimal point	with decimal point
	Sensore:	TC	
0	TC J °C	0/1000	0.0/999.9
1	TC J °F	32/1832	32.0/999.9
2	TC K °C	0/1300	0.0/999.9
3	TC K °F	32/2372	32.0/999.9
4	TC R °C	0/1750	0.0/999.9
5	TC R °F	32/3182	32.0/999.9
6	TC S °C	0/1750	0.0/999.9
7	TC S ° F	32/3182	32.0/999.9
8	TC T °C	-200/400	-199.9/400.0
9	TC T °F	-328/752	-199.9/752.0
28	TC	CUSTOM	CUSTOM
29	TC	CUSTOM	CUSTOM
30	PT100 °C	-200/850	-199.9/850.0
31	PT100 °F	-328/156 2	-199.9/999.9
32	JPT100 °C	-200/600	-199.9/600.0
33	JPT100 °F	-328/1112	-199.9/999.9
34	PTC °C	-55/120	-55.0/120.0
35	PTC °F	-67/248	-67.0/248.0
36	NTC °C	-10/70	-10.0/70.0
37	NTC °F	14/158	14.0/158.0
38	0...60 mV	-1999/9999	-199.9/999.9
39	0...60 mV	Custom scale	Custom scale
40	12...60 mV	-1999/9999	-199.9/999.9
41	12...60 mV	Custom scale	Custom scale
42	0...20 mA	-1999/9999	-199.9/999.9
43	0...20 mA	Custom scale	Custom scale
44	4...20 mA	-1999/9999	-199.9/999.9
45	4...20 mA	Custom scale	Custom scale
46	0...10 V	-1999/9999	-199.9/999.9
47	0...10 V	Custom scale	Custom scale
48	2...10 V	-1999/9999	-199.9/999.9
49	2...10 V	Custom scale	Custom scale
50	0...5 V	-1999/9999	-199.9/999.9
51	0...5 V	Custom scale	Custom scale
52	1...5 V	-1999/9999	-199.9/999.9
53	1...5 V	Custom scale	Custom scale
54	0...1 V	-1999/9999	-199.9/999.9
55	0...1 V	Custom scale	Custom scale
56	200mv..1V	-1999/9999	-199.9/999.9
57	200mv..1V	Custom scale	Custom scale
58	Cust10 V-20mA	-1999/9999	-199.9/999.9
59	Cust10 V-20mA	Custom scale	Custom scale
60	Cust 60mV	-1999/9999	-199.9/999.9
61	Cust 60mV	Custom scale	Custom scale
62	PT100-JPT	CUSTOM	CUSTOM
63	PTC	CUSTOM	CUSTOM
64	NTC	CUSTOM	CUSTOM

For custom linearization:
- LO signal is generated with variable below Lo.S or at minimum calibration value
- HI signal is generated with variable above Lo.S or at maximum calibration value

Max. non-linearity error for thermocouples (TC), resistors (PT100) and thermistors (PTC, NTC).

The error is calculated as deviation from theoretical value and is expressed as percentage of full scale (in °C).

S, R range 0...1750°C; error < 0.2% f.s. (t > 300°C) / for other range; error < 0.5% f.s.
T error < 0.2% f.s. (t > -150°C)
B range 44...1800°C; error < 0.5% f.s. (t > 300°C) / range 44,0...999,9; error < 1% f.s. (t > 300°C)
U range -99,9...99,9 and -99...99°C; error < 0.5% f.s. / for other range; error < 0.2% f.s. (t > -150°C)
G error < 0.2% f.s. (t > 300°C)
D error < 0.2% f.s. (t > 200°C)
C range 0...2300; error < 0.2% f.s. / for other range; error < 0.5% f.s.

NTC error < 0.5% f.s.

Tc: **J, K, E, N, L** error < 0,2% f.s.
JPT100 and **PTC** error < 0,2% f.s.
PT100 scale -200...850°C
Precision better than 0,2% f.s. at 25°C
In range 0...50°C:
- Precision better than 0,2% f.s. in range -200...400°C
- Precision better than 0,4% f.s. in range +400...850°C

(where f.s. refers to range -200... +850°C)

0.1 — FLt — Digital filter on input (if = 0 excludes averaging filter on sample value) — 0.0 ... 20.0 sec

0.5 — FLd — Digital filter on input display — 0 ... 9.9 scale points

1 — dP.S — Decimal point position for input scale

dP_S	Format
0	xxxx
1	xxx.x
2	xx.xx (*)
3	x.xxx (*)

(*) not available for TC, RTD, PTC and NTC scales

0.0 — Lo.S — Minimum limit of main input scale — min...max input range selected in tyP

850.0 — Hi.S — Maximum limit of main input scale — min...max input range selected in tyP

0 — oFS. — Offset correction of main input — -999 ... 999 scale points

30.0 — LoL — Lower limit for setting SP and absolute alarms — Lo.S ... Hi.S

130.0 — HiL — Upper limit for setting SP and absolute alarms — Lo.S ... Hi.S

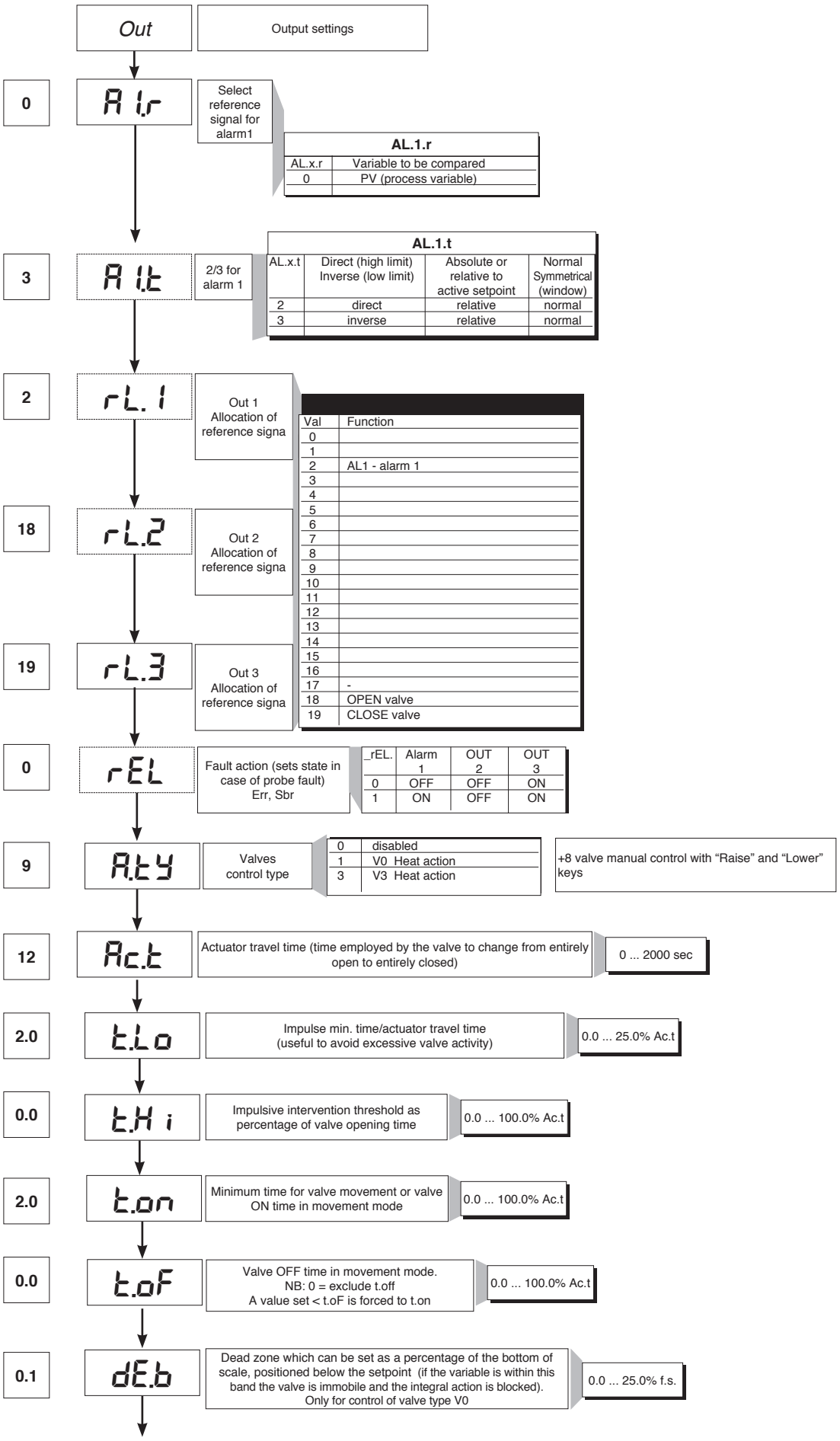
Out
Output settings
0
A1.r
Select reference signal for alarm1
AL.1.r
AL.x.r | Variable to be compared
0 | PV (process variable)
3
A1.t
2/3 for alarm 1
AL.1.t
AL.x.t | Direct (high limit) Inverse (low limit) | Absolute or relative to active setpoint | Normal Symmetrical (window)
2 | direct | relative | normal
3 | inverse | relative | normal
2
rL.1
Out 1 Allocation of reference signa
Val | Function
0
1
2 | AL1 - alarm 1
3
4
5
6
7
8
9
10
11
12
13
14
15
16
17 | -
18 | OPEN valve
19 | CLOSE valve
18
rL.2
Out 2 Allocation of reference signa
19
rL.3
Out 3 Allocation of reference signa
0
rEL
Fault action (sets state in case of probe fault) Err, Sbr
_rEL. | Alarm 1 | OUT 2 | OUT 3
0 | OFF | OFF | ON
1 | ON | OFF | ON
9
A.ty
Valves control type
0 | disabled
1 | V0 Heat action
3 | V3 Heat action
+8 valve manual control with “Raise” and “Lower” keys
12
Ac.t
Actuator travel time (time employed by the valve to change from entirely open to entirely closed)
0 ... 2000 sec
2.0
t.Lo
Impulse min. time/actuator travel time (useful to avoid excessive valve activity)
0.0 ... 25.0% Ac.t
0.0
t.Hi
Impulsive intervention threshold as percentage of valve opening time
0.0 ... 100.0% Ac.t
2.0
t.on
Minimum time for valve movement or valve ON time in movement mode
0.0 ... 100.0% Ac.t
0.0
t.oF
Valve OFF time in movement mode. NB: 0 = exclude t.off A value set < t.oF is forced to t.on
0.0 ... 100.0% Ac.t
0.1
dE.b
Dead zone which can be set as a percentage of the bottom of scale, positioned below the setpoint (if the variable is within this band the valve is immobile and the integral action is blocked). Only for control of valve type V0
0.0 ... 25.0% f.s.

• Prot

12 — *Pro* — Protection code

Prot	Display	Modification
0	SP, Hy.P, Hy.n, AL.2, AL.3, PoS, OuP, INF	SP, Hy.P , Hy.n, AL.2, AL.3, PoS
1	SP, Hy.P, Hy.n, AL.2, AL.3, PoS, OuP, INF	SP
2	SP, OuP, INF	

+ 4 to disable InP, Out
+ 8 to disable CFG
+ 16 to disable SW “power-up - power down”
+ 32 disable manual power latching
+ 64 to disable manual power modification
+128 enables full configuration

Note: OuP and INF only display configuration extended

• Hrd

Hrd — Hardware configuration

0 — hd.1 — Enable multiset instrument control by serial

6 — Ctr — Control type

Val	Control type
0	P heat
1	
2	
3	PI heat
4	
5	
6	PID heat
7	
8	
9	ON-OFF heat
10	
11	
12	
13	
14	

Selection of derivative action sampling time:
+ 0 sample 1 sec.
+ 16 sample 4 sec.
+ 32 sample 8 sec.
+ 64 sample 240 msec.

Note: LbA alarm is not enabled with ON/OFF type control

1 — AL.n — Select number of enabled alarms

AL.nr	Alarme1	Alarm 2	Alarm 3
1	enabled	disabled	disabled

1 — but. — Function of M/A keys

butt	
0	No function (key disenabled))
1	MAN / AUTO controller
2	
3	HOLD
4	
5	
6	Start/Stop selftuning
7	Start/Stop autotuning
8	

+ 16 disables the “back menu” function (Auto/Man + F keys) in the configuration menus

0 — dSP — Defining SV display function

diSP	Lower display (SV) function
0	SSP - setpoint enabled
1	PoS - valve position
2	Control output value
3	Deviation (SSP - PV)

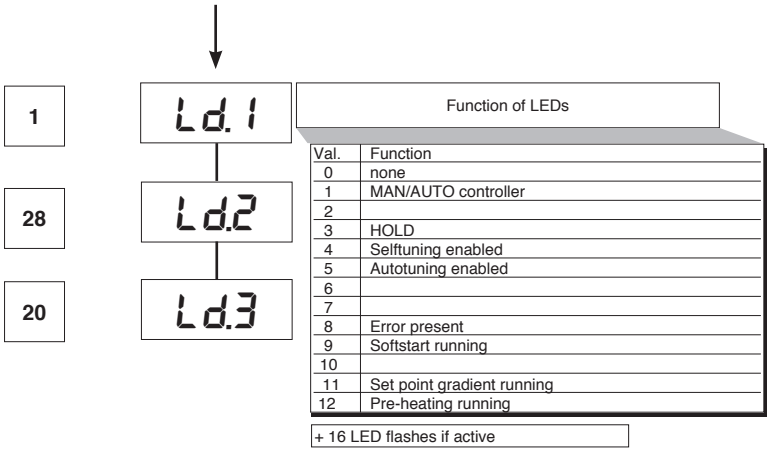

Val.	Function
0	none
1	MAN/AUTO controller
2	
3	HOLD
4	Selftuning enabled
5	Autotuning enabled
6	
7	
8	Error present
9	Softstart running
10	
11	Set point gradient running
12	Pre-heating running

• Lin

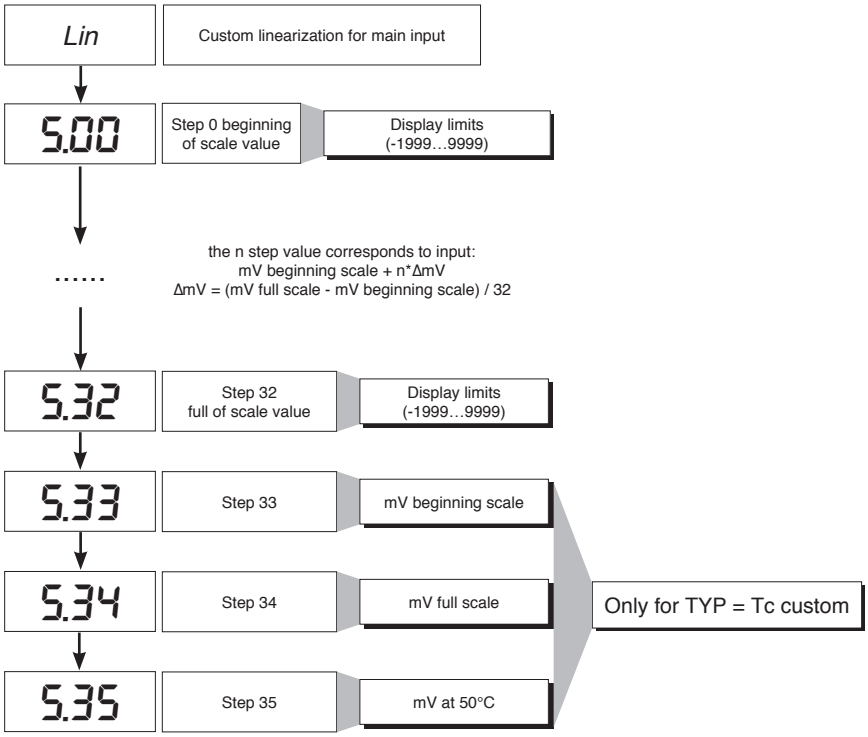

• U.CAL

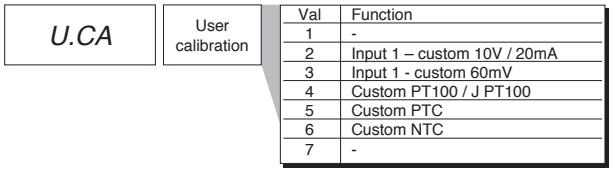

Val	Function
1	-
2	Input 1 – custom 10V / 20mA
3	Input 1 - custom 60mV
4	Custom PT100 / J PT100
5	Custom PTC
6	Custom NTC
7	-

7 • CONSENT FOR BURNER AL1

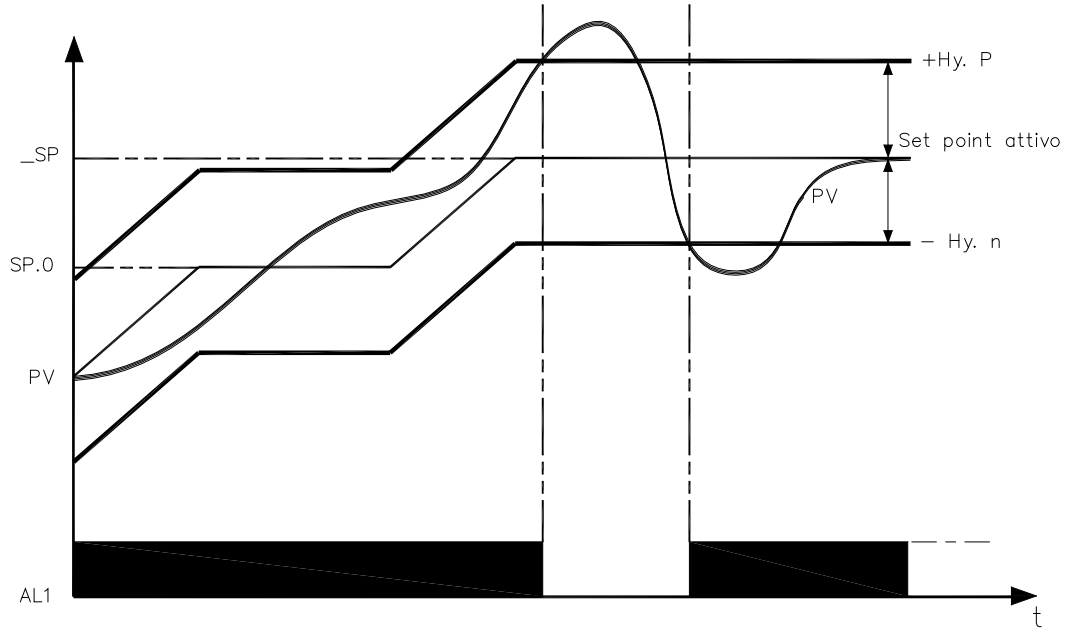

Obtain burner consent by configuring alarm 1 as inverse deviation with positive hysteresis Hy.P and negative hysteresis Hy.n

8 • PRE-HEATING FUNCTION

Enable the pre-heating function by setting parameters GS.0, Ht.0, GS.1 other than zero.
It consists of three phases that are activated sequentially at firing:

- **Ramp 0 phase**
  Enabled by setting GS.0 > 0. Starting from setpoint = PV (initial state), it reaches pre-heating set SP.0 with gradient GS.0
- **Maintenance phase**
  Enabled by setting Ht.0 > 0. Maintains pre-heating setpoint SP.0 for time Ht.0
- **Ramp 1 phase**
  Enabled by setting GS.1 > 0. Starting from pre-heating setpoint SP.0, it reaches active _SP set with gradient GS.1

In case of selftuning, the pre-heating function is not activated

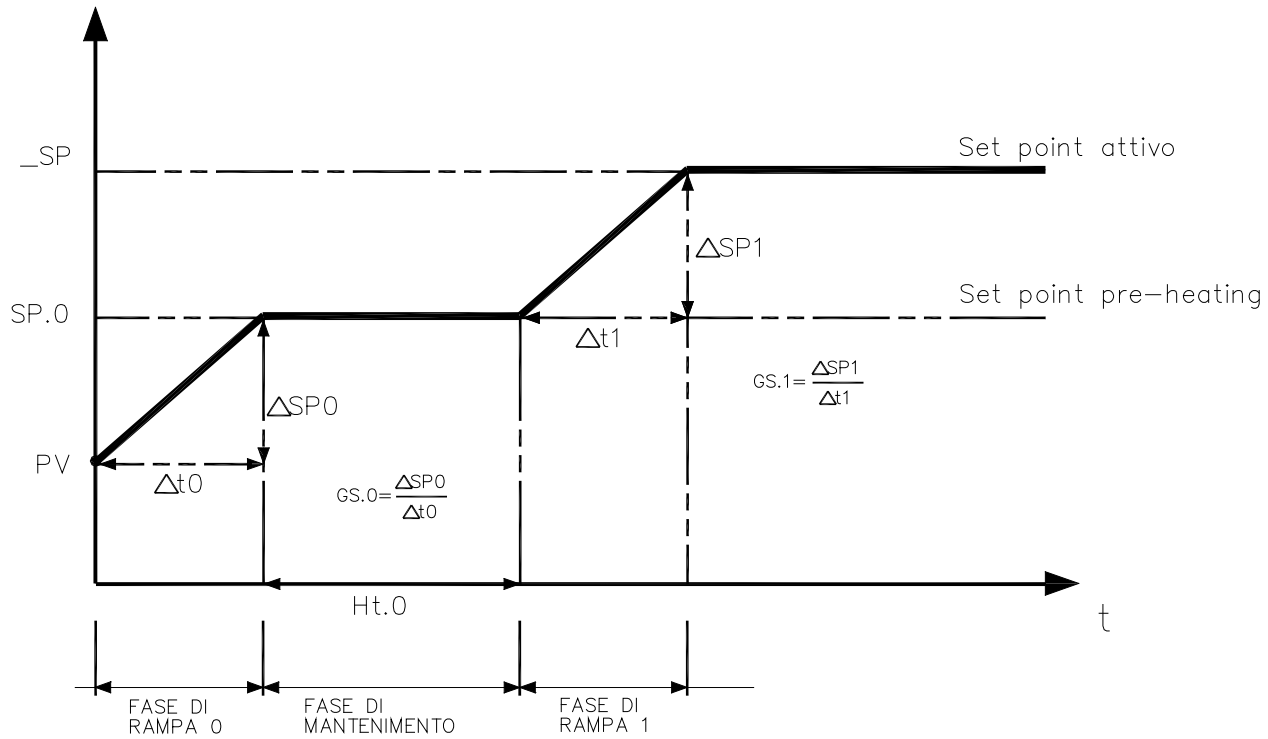

9 • ADJUSTMENT WITH MOTORIZED VALVE

In an adjustment process the adjustment valve has the function of varying fuel delivery (frequently corresponding to the thermal energy introduced into the process) in relation to the signal coming from the controller.
For this purpose it is provided with an actuator able to modify its opening value, overcoming the resistances produced by the fluid passing inside it.
The adjustment valves vary the delivery in a modulated manner, producing finite variations in the fluid passage inner area corresponding to finite variations of the actuator input signal, coming from the controller. The servomechanism, for example, comprises an electric motor, a reducer and a mechanical transmission system which actions the valve.
Various auxiliary components can be present such as the mechanical and electrical safety end travels, manual actioning systems.

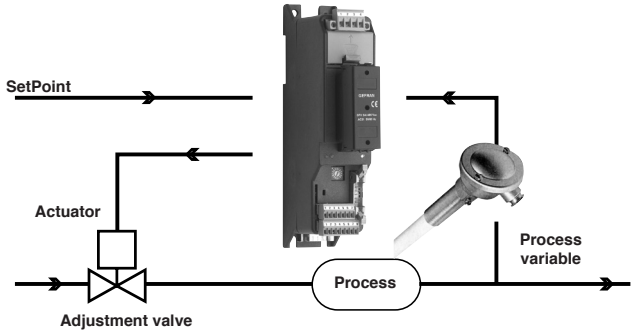

CONTROL EXAMPLE FOR V0 VALVE

The controller determines, on the basis of the dynamics of the process, the control output for the valve corresponding to the opening of the same in such a way so as to maintain the desired value of the process variable.

Characteristic parameters for valves control

- Actuator time (Ac.t) is the time employed by the valve to pass from entirely open to entirely closed (or vice-versa), and can be set with a resolution of one second. It is a mechanical feature of the valve+actuator unit.
NOTE: if the actuator's travel is mechanically limited it is necessary to proportionally reduce the Ac.t value.

- Minimum impulse (t.Lo) expressed as a % of the actuator time (resolution 0.1%).
Represents the minimum change in position corresponding to a minimum change in power supplied by the instrument below which the actuator will not physically respond to the command.
This represents the minimum variation in position due to which the actuator does not physically respond to the command.
The minimum duration of the movement can be set in t.Lo, expressed as a % of actuator time.
- Impulsive intervention threshold (t.Hi) expressed as a % of the actuator time (resolution 0.1%) represents the position displacement (requested position – real position) due to which the manoeuvre request becomes impulsive.

You can choose between 2 types of control:
1) ON time of movement = t.on and OFF time proportional to shift and greater than or equal to t.Lo (we recommend setting t.on = t.Lo) (set t.oF = 0).
2) ON time of movement = t.on and OFF time = t.oF. A value set for t.oF < t.on is forced to t.on. To activate this type, set t.oF < > 0.
The type of movement approach allows fine control of the reverse drive valve (from potentiometer or not), especially useful in cases of high mechanical inertia.
Set t.Hi = 0 to exclude modulation in positioning.
This type of modulated approach allows precise control of the feedback actioned valve, by a potentiometer or not, and is especially useful in cases of high mechanical inertia. Setting t.Hi = 0 excludes modulation in positioning.

- Dead zone(dE.b) is a displacement band between the adjustment setpoint and the process variable within which the controller does not supply any command to the valve (Open = OFF; Close = OFF). It is expressed as a percentage of the bottom scale and is positioned below the setpoint.
The dead zone is useful in an operative process to avoid straining the actuator with repeated commands and an insignificant effect on the adjustment. Setting dE.b = 0 the dead zone is excluded.

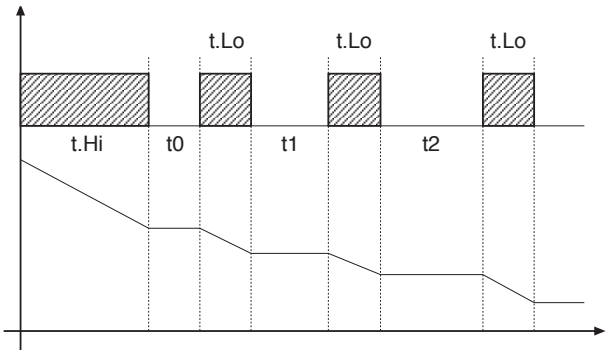

Graph of behavior inside the band with integral time ≠ 0.

With integral time = 0, movement ON time is always equal to OFF time.

t0 = t.Lo

Valve control modes

With the controller in manual, the setting of parameter At.y ≥ 8 allows direct control of the valve open and close commands through the keyboard Increments and Decrements on the front seats.

V0 - for floating valve without potentiometer

Model V0 have similar behaviour: every manoeuvre request greater than the minimum impulse t.Lo is sent to the actuator by means of the OPEN/CLOSE relays; every action updates the presumed position of the virtual potentiometer calculated on the basis of the actuator travel declared time.
In this way there is always a presumed position of the valve which is compared with the position request of the controller.
Having reached a presumed extreme position (entirely open or entirely closed determined by the “virtual potentiometer”) the controller provides a command in the same direction, in this way ensuring the real extreme position is reached (minimum command time = t.on).
The actuators are usually protected against the OPEN command in the entirely open position or CLOSE command in the entirely closed position.

V3 - for floating valve, PI control

When the difference between the position calculated by the controller and the only proportional component exceeds the value corresponding to the minimum impulse t.Lo the controller provides an OPEN or CLOSE command of the duration of the minimum impulse itself t.Lo.
At each delivery the integral component of the command is set to zero (discharge of the integral).
The frequency and duration of the impulses is correlated to the integral time (h.it or c.it).

Non-movement behavior
t.Hi = 0: with power = 100% or 0.0%, the corresponding open or close outputs always remain enabled (safety status).

Movement behavior
t.Hi < > 0: with position attained corresponding to 100% or 0.0%, the corresponding open or close outputs are switched off.

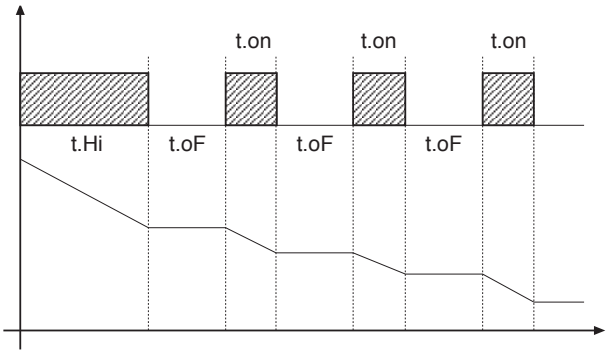

If t.oF = 0, current function is maintained.

If t.oF ≠ 0 movement mode will be as shown on the graph

10 • CONTROL ACTIONS

Proportional Action:
action in which contribution to output is proportional to deviation at input (deviation = difference between controlled variable and setpoint).
Derivative Action:
action in which contribution to output is proportional to rate of variation input deviation.
Integral Action:
action in which contribution to output is proportional to integral of time of input deviation.

Influence of Proportional, Derivative and Integral actions on response of process under control

* An increase in P.B. reduces oscillations but increases deviation.
* A reduction in P.B. reduces the deviation but provokes oscillations of the controlled variable (the system tends to be unstable if P.B. value is too low).
* An increase in Derivative Action corresponds to an increase in Derivative Time, reduces deviation and prevents oscillation up to a critical value of Derivative Time, beyond which deviation increases and prolonged oscillations occur.
* An increase in Integral Action corresponds to a reduction in Integral Time, and tends to eliminate deviation between the controlled variable and the setpoint when the system is running at rated speed.

If the Integral Time value is too long (Weak integral action), deviation between the controlled variable and the setpoint may persist.
Contact GEFRAN for more information on control actions.

11 • MANUAL TUNING

A) Enter the setpoint at its working value.
B) Set the proportional band at 0.1% (with on-off type setting).
C) Switch to automatic and observe the behavior of the variable. It will be similar to that in the figure:

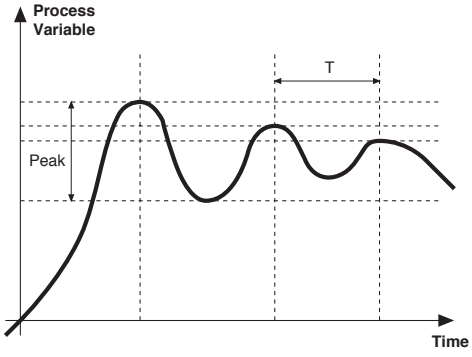

D) The PID parameters are calculated s follows: Proportional band

$$P.B. = \frac{\text{Peak}}{(V\ max - V\ min)} \times 100$$

(V max - V min) is the scale range.
Integral time: It = 1.5 x T
Derivative time: dt = It/4
E) Switch the unit to manual, set the calculated parameters. Return to PID action by setting the appropriate relay output cycle time, and switch back to Automatic.
F) If possible, to optimize parameters, change the setpoint and check temporary response. If an oscillation persists, increase the proportional band. If the response is too slow, reduce it.

12 • SET GRADIENT

SET GRADIENT: if set to ≠0, the setpoint is assumed equal to PV at power-on and auto/man switchover. With gradient set, it reaches the local setpoint.
Every variation in setpoint is subject to a gradient.
The set gradient is inhibited at power-on when self-tuning is engaged.
If the set gradient is set to ≠0, it is active even with variations of the local setpoint.
The control setpoint reaches the set value at the speed defined by the gradient.

13 • SOFTWARE ON / OFF SWITCHING FUNCTION

How to switch the unit OFF: hold down the “F” and “Raise” keys simultaneously for 5 seconds to deactivate the unit, which will go to the OFF state while keeping the line supply connected and keeping the process value displayed. The SV display is OFF.
All outputs (alarms and controls) are OFF (logic level 0, relays de-energized) and all unit functions are disabled except the switch-on function and digital communication.
How to switch the unit ON: hold down the “F” key for 5 seconds and the unit will switch OFF to ON. If there is a power failure during the OFF state, the unit will remain in OFF state at the next power-up (ON/OFF state is memorized).
The function is normally enabled, but can be disabled by setting the parameter Prot = Prot +16.

14 • SELF-TUNING

The function works for single output systems (heating or cooling). The self-tuning action calculates optimum control parameter values during process startup. The variable (for example, temperature) must be that assumed at zero power (room temperature).
The controller supplies maximum power until an intermediate value between starting value and setpoint is reached, after which it zeros power.
PID parameters are calculated by measuring overshoot and the time needed to reach peak. When calculations are finished, the system disables automatically and the control proceeds until the setpoint is reached.

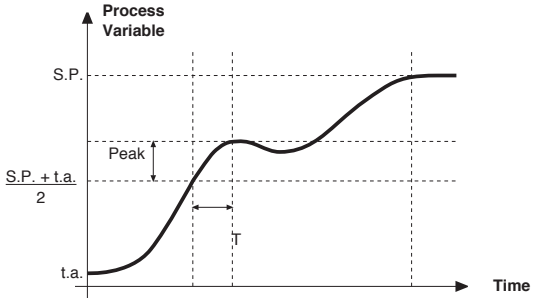

How to activate self-tuning:
A. Activation at power-on
1. Set the setpoint to the required value
2. Enable selftuning by setting the Stun parameter to 2 (CFG menu)
3. Turn off the instrument
4. Make sure the temperature is near room temperature
5. Turn on the instrument again

B. Activation from keyboard
1. Make sure that key M/A is enabled for Start/Stop selftuning (code but = 6 Hrd menu)
2. Bring the temperature near room temperature
3. Set the setpoint to the required value
4. Press key M/A to activate selftuning (Attention: selftuning interrupts if the key is pressed again)

The procedure runs automatically until finished, when the new PID parameters are stored: proportional band, integral and derivative times calculated for the active action (heating or cooling). In case of double action (heating or cooling), parameters for the opposite action are calculated by maintaining the initial ratio between parameters (ex.: CPb = HPb * K; where K = CPb / HPb when self-tuning starts). When finished, the Stun code is automatically cancelled.

Notes :
-The procedure does not start if the temperature is higher than the setpoint (heating control mode) or if the temperature is lower than the setpoint (cooling control mode). In this case , the Stu code is not cancelled.
-It is advisable to eneable one of the configurable LEDs to signal selftuning status.By setting one of parameters LED1, LED2, LED3=4 or 20 on the Hrd menu, the respective LED will be on or flashing when selftuning is active.

15 • ACCESSORIES

• Interface for instrument configuration

KIT PC USB / RS485 o TTL

Kit for PC via the USB port (Windows environment) for GEFRAN instruments configuration:
Lets you read or write all of the parameters
• A single software for all models
• Easy and rapid configuration
• Saving and management of parameter recipes
• On-line trend and saving of historical data
Component Kit:
- Connection cable PC USB ... port TTL
- Connection cable PC USB ... RS485 port
- Serial line converter
- CD SW GF Express installation

• ORDERING CODE

GF_eXK-2-0-0	cod F049095

16 • ORDER CODE

600V [R] [R] [R] [-]

UTPUT 1	
Relay	R

UTPUT 2	
Relay	R

UTPUT 3	
Relay	R

POWER SUPPLY	
0	11...27Vac/dc
1	100...240Vac

• WARNINGS

WARNING: this symbol indicates danger. It is placed near the power supply circuit and near high-voltage relay contacts.

Read the following warnings before installing, connecting or using the device:
• follow instructions precisely when connecting the device.
• always use cables that are suitable for the voltage and current levels indicated in the technical specifications.
• the device has no ON/OFF switch: it switches on immediately when power is turned on. For safety reasons, devices permanently connected to the power supply require a two-phase disconnecting switch with proper marking. Such switch must be located near the device and must be easily reachable by the user. A single switch can control several units.
• if the device is connected to electrically NON-ISOLATED equipment (e.g. thermocouples), a grounding wire must be applied to assure that this connection is not made directly through the machine structure.
• if the device is used in applications where there is risk of injury to persons and/or damage to machines or materials, it MUST be used with auxiliary alarm units. You should be able to check the correct operation of such units during normal operation of the device.
• before using the device, the user must check that all device parameters are correctly set in order to avoid injury to persons and/or damage to property.
• the device must NOT be used in infiammable or explosive environments. It may be connected to units operating in such environments only by means of suitable interfaces in conformity to local safety regulations.
• the device contains components that are sensitive to static electrical discharges. Therefore, take appropriate precautions when handling electronic circuit boards in order to prevent permanent damage to these components.
Installation: installation category II, pollution level 2, double isolation
The equipment is intended for permanent indoor installations within their own enclosure or panel mounted enclosing the rear housing and exposed terminals on the back.
• only for low power supply: supply from Class 2 or low voltage limited energy source
• power supply lines must be separated from device input and output lines; always check that the supply voltage matches the voltage indicated on the device label.
• install the instrumentation separately from the relays and power switching devices
• do not install high-power remote switches, contactors, relays, thyristor power units (particularly if “phase angle” type), motors, etc... in the same cabinet.
• avoid dust, humidity, corrosive gases and heat sources.
• do not close the ventilation holes; working temperature must be in the range of 0...50°C.
• surrounding air: 50°C
• use 60/75°C copper (Cu) conductor only, wire size range 2x No 22 - 14AWG, Solid/Stranded
• use terminal tightening torque 0.5N m
If the device has faston terminals, they must be protected and isolated; if the device has screw terminals, wires should be attached at least in pairs.
• *Power*: supplied from a disconnecting switch with fuse for the device section; path of wires from switch to devices should be as straight as possible; the same supply should not be used to power relays, contactors, solenoid valves, etc.; if the voltage waveform is strongly distorted by thyristor switching units or by electric motors, it is recommended that an isolation transformer be used only for the devices, connecting the screen to ground; it is important for the electrical system to have a good ground connection; voltage between neutral and ground must not exceed 1V and resistance must be less than 6Ohm; if the supply voltage is highly variable, use a voltage stabilizer for the device; use line filters in the vicinity of high frequency generators or arc welders; power supply lines must be separated from device input and output lines; always check that the supply voltage matches the voltage indicated on the device label.
• *Input and output connections*: external connected circuits must have double insulation; to connect analog inputs (TC, RTD) you have to: physically separate input wiring from power supply wiring, from output wiring, and from power connections; use twisted and screened cables, with screen connected to ground at only one point; to connect adjustment and alarm outputs (contactors, solenoid valves, motors, fans, etc.), install RC groups (resistor and capacitor in series) in parallel with inductive loads that work in AC *(Note: all capacitors must conform to VDE standards (class x2) and support at least 220 VAC. Resistors must be at least 2W)*; fit a 1N4007 diode in parallel with the coil of inductive loads that operate in DC.
GEFRAN spa will not be held liable for any injury to persons and/or damage to property deriving from tampering, from any incorrect or erroneous use, or from any use not conforming to the device specifications.

Set-up for 600V RRR0-1-T73 regulator

Set up for temperature probe Pt100 (ex Siemens QAE2120 130°C max.)

The regulator comes out of the factory preset with the corresponding values of the Siemens RWF40.000 and RWF50.2x

Verify wiring of the sensor

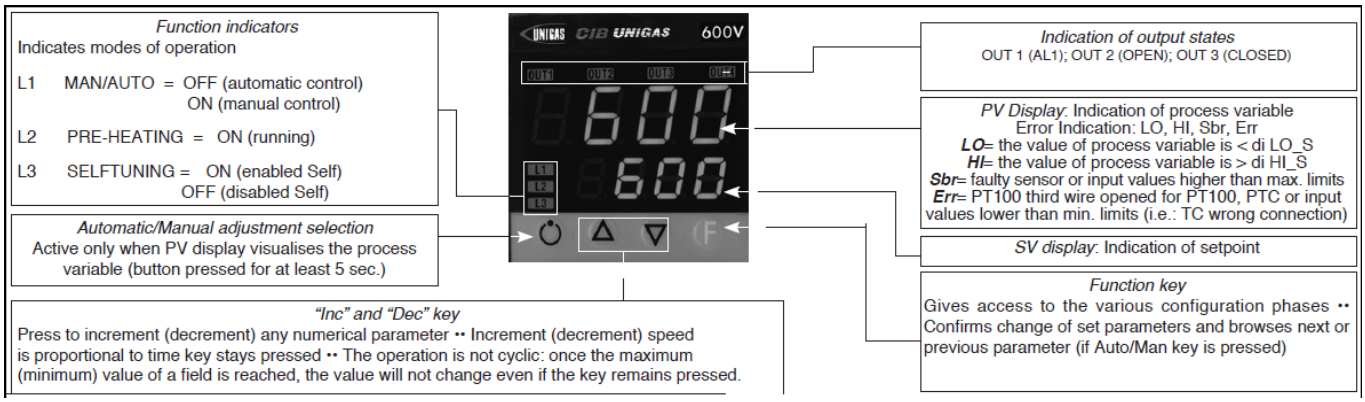

Regulation of the set-point = **80**
It can be modified by using arrows "up" and "down".
By pushing **F** you go to parameters:

Hy.P	5 (hysteresis positive for output 1, terminals 21-22 (ex Q13-Q14)
Hy.n	-5 hysteresis negative for output ,1 terminals 21-22 (ex Q13-Q14)

Keep pushing **F** until you see **PASS**, release **F** and through the arrows set **99**, push **F** and visualize **Pro** (protection code) default is **12**, through the arrows set **128** and push **F,** keep it pushed until all parameters **InF**, **CFG**, **InP**, **Out**, **PASS** are visualized.

CFG	
S.tun	0
hPb	1,2
hIt	5,83
hdt	1,33
…	

InP	
….	
tyP	30 (Pt100)
…	
dP_S	1 (decimals num.)
Lo.S	0 (min. sensor scale)
Hi.S	850,0 (max sensor scale)
oFS	0 (offset of input correction)
Lo.L	30,0 (lower set-point range limit)
Hi.L	130,0 (upper set-point range limit)

Out	
A1.r	0
…	
A1.t	3 (operating mode AL1 =inverse-relative-normal)
…	
rL.1	2 (AL1)
rL.2	18 (open)
rL.3	19 (close)
rEL	0
A.ty	9 (type of servocontrol command)
Ac.t	12 (servocontrol running time: SQN72.4…/STA12..=12; SQM40.265=30)
t_Lo	2
t_Hi	0.0
t.on	2
t.oF	0.0
dE.b	0,1 (dead zone in % of end scale)

PAS	99 then push and keep pushed **F** until visualization of **Hrd**
Hrd	
…	
CtrL	6 (PID warm)
AL.nr	1
but	1
diSP	0
Ld.1	1
Ld.2	28
Ld.3	20

Keep pushed **F** until you visualize **PASS**, release **F** and through the arrows set **99**, push **F** and visualize **Pro** (protection code) from **128**, through the arrows, bring it back to **12,** and keep **F** pushed until you come back to set-point value.

Manual operation :
Keep pushed the lower left key for at least 5 sec.
The instrument will enter the "MAN" mode (see also "Ld1" switching on).
Through the arrows, "Open" and "Close" outputs are activated.
To come back to normal working keep the lower left key pushed for at least 5 sec.

Software switch off :
By keeping pushed keys **Arrow up** + **F** for more than 5 sec. the instrument switches off the software, does not command the outputs and visualize only the variable of process measured by the probe.
To restore keep pushed **F** for more than 5 sec.

Set up for temperature probe Pt100 for high temperature (350°C max.)

Verify wiring of the sensor

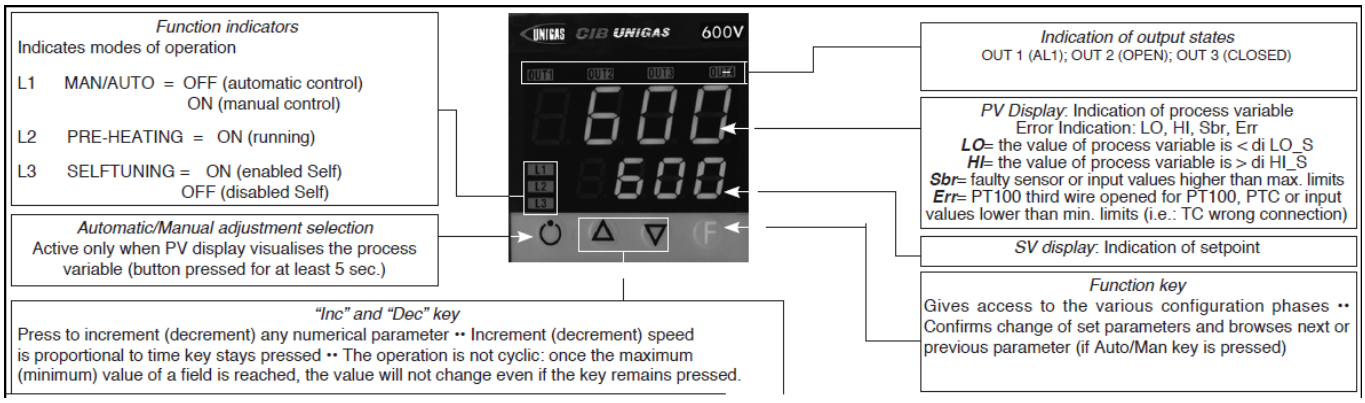

Regulation of the set-point = **80**
It can be modified by using arrows "up" and "down".
By pushing **F** you go to parameters:

Hy.P	10 (hysteresis positive for output 1 terminals 21-22 (ex Q13-Q14)
Hy.n	-5 (hysteresis negative for output 1 terminals 21-22 (ex Q13-Q14)

Keep pushing **F** until you see **PASS**, release **F** and through the arrows set **99**, push **F** and visualize **Pro** (protection code) default is **12**, through the arrows set **128** and push **F,** keep it pushed until all parameters **InF**, **CFG**, **InP**, **Out**, **PASS** are visualized.

CFG	
S.tun	0
hPb	1,2
hIt	5,83
hdt	1,33
…	

InP	
….	
tyP	30 (Pt100)
…	
dP_S	1 (decimals num.)
Lo.S	0 (min. sensor scale)
Hi.S	850,0 (max sensor scale)
oFS	0 (offset of input correction)
Lo.L	0,0 (lower set-point range limit)
Hi.L	350,0 (upper set-point range limit)

Out	
A1.r	0
…	
A1.t	3 (mode AL1 =inverse-relative-normal)
…	
rL.1	2 (AL1)
rL.2	18 (open)
rL.3	19 (close)
rEL	0
A.ty	9 (type of servocontrol command)
Ac.t	12 (servocontrol running time: SQN72.4…/STA12..=12; SQM40.265=30)
t_Lo	2
t_Hi	0.0
t.on	2
t.oF	0.0
dE.b	0,1 (dead zone in % of end scale)

PAS	99 then push and keep pushed **F** until visualization of **Hrd**
Hrd	
…	
CtrL	6 (PID warm)
AL.nr	1
but	1
diSP	0
Ld.1	1
Ld.2	28
Ld.3	20

Keep pushed **F** until you visualize **PASS**, release **F** and through the arrows set **99**, push **F** and visualize **Pro** (protection code) from **128**, through the arrows, bring it back to **12,** and keep **F** pushed until you come back to set-point value.

Manual operation:
Keep pushed the lower left key for at least 5 sec.
The instrument will enter the "MAN" mode (see also "Ld1" switching on).
Through the arrows, "Open" and "Close" outputs are activated.
To come back to normal working keep the lower left key pushed for at least 5 sec.

Software switch off :
By keeping pushed keys **Arrow up** + **F** for more than 5 sec. the instrument switches off the software, does not command the outputs and visualize only the variable of process measured by the probe.
To restore keep pushed **F** for more than 5 sec.

Set up for pressure transmitter 2 wires signal 4÷20mA

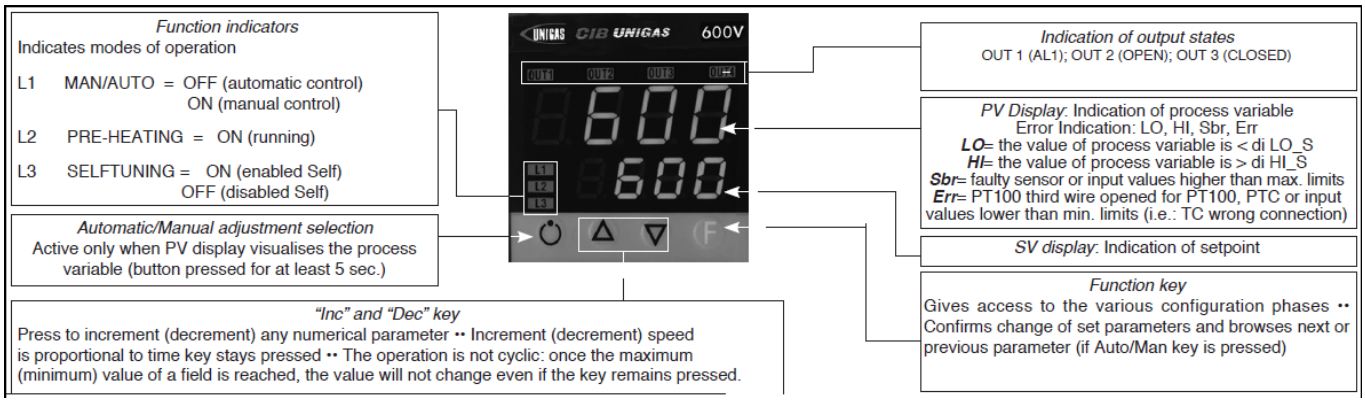

With pressure transmitters first we need to enable their power supply: remove the part as shown below, then, on the CPU unit, move the bridge from Pt100 to +Vt

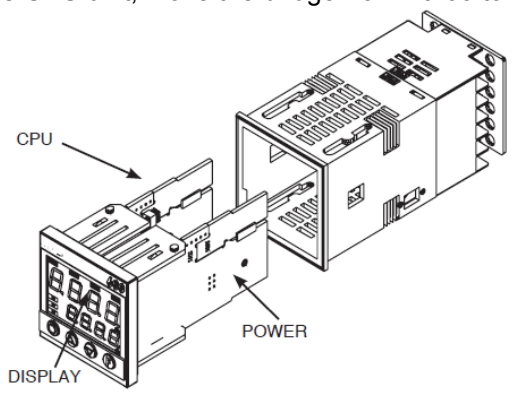

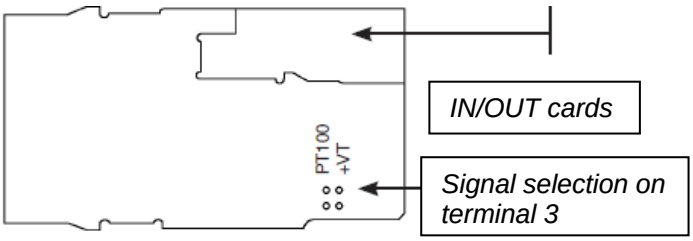

Verify wiring of the sensor

Impostazione set-point

Transmitter	**1,6bar**	**3bar**	**10bar**	**16bar**	**25bar**	**40bar**
Set-point	1bar	1,5bar	6bar	6bar	6bar	6bar

To modify it directly use "up" and "down" arrows.
By pushing **F** you go to parameter:

Transmitter	**1,6bar**	**3bar**	**10bar**	**16bar**	**25bar**	**40bar**
Hy.P	0,2bar	0,5bar	0,5bar	0,8bar	1,25bar	2bar
Hy.n	0bar	0bar	0bar	0bar	0bar	0bar

Keep pushing **F** until you see **PASS**, release **F** and through the arrows set **99**, push **F** and visualize **Pro** (protection code) default is **12**, through the arrows set **128** and push **F,** keep it pushed until all parameters **InF**, **CFG**, **InP**, **Out**, **PASS** are visualized.

CFG	
S.tun	0
hPb	5
hIt	1,33
hdt	0,33
…	

InP	
….	
tyP	44 (4÷20mA)
…	
dP_S	2 (decimals num.)

Transmitter	**1,6bar**	**3bar**	**10bar**	**16bar**	**25bar**	**40bar**	
Lo.S	0,00	0,00	0,00	0,00	0,00	0,00	min. sensor scale
Hi.S	1,60	3,00	10,00	16,00	25,00	40,00	max sensor scale
oFS	0	0	0	0	0	0	offset of input correction
Lo.L	0,00	0,00	0,00	0,00	0,00	0,00	lower set-point setting
Hi.L	1,60	3,00	10,00	16,00	25,00	40,00	upper set-point setting

Out	
A1.r	0
…	
A1.t	3 (mode AL1 =inverse-relative-normal)
…	
rL.1	2 (AL1)
rL.2	18 (open)
rL.3	19 (close)
rEL	0
A.ty	9 (type of servocontrol command)
Ac.t	12 (servocontrol running time: SQN72.4…/STA12..=12; SQM40.265=30)
t_Lo	2
t_Hi	0.0
t.on	2
t.oF	0.0
dE.b	0,1 (dead zone in % of end scale)

PAS	99 then push and keep pushed **F** until visualization of **Hrd**
Hrd	
…	
CtrL	6 (PID warm)
AL.nr	1
but	1
diSP	0
Ld.1	1
Ld.2	28
Ld.3	20

Keep pushed **F** until you visualize **PASS**, release **F** and through the arrows set **99**, push **F** and visualize **Pro** (protection code) from **128**, through the arrows, bring it back to **12,** and keep **F** pushed until you come back to set-point value.

Manual operation:
Keep pushed the lower left key for at least 5 sec.
The instrument will enter the "MAN" mode (see also "Ld1" switching on).
Through the arrows, "Open" and "Close" outputs are activated.
To come back to normal working keep the lower left key pushed for at least 5 sec.

Software switch off :
By keeping pushed keys **Arrow up** + **F** for more than 5 sec. the instrument switches off the software, does not command the outputs and visualize only the variable of process measured by the probe.
To restore keep pushed **F** for more than 5 sec.

Set -up for thermocouples type K or J

Verify wiring of the sensor

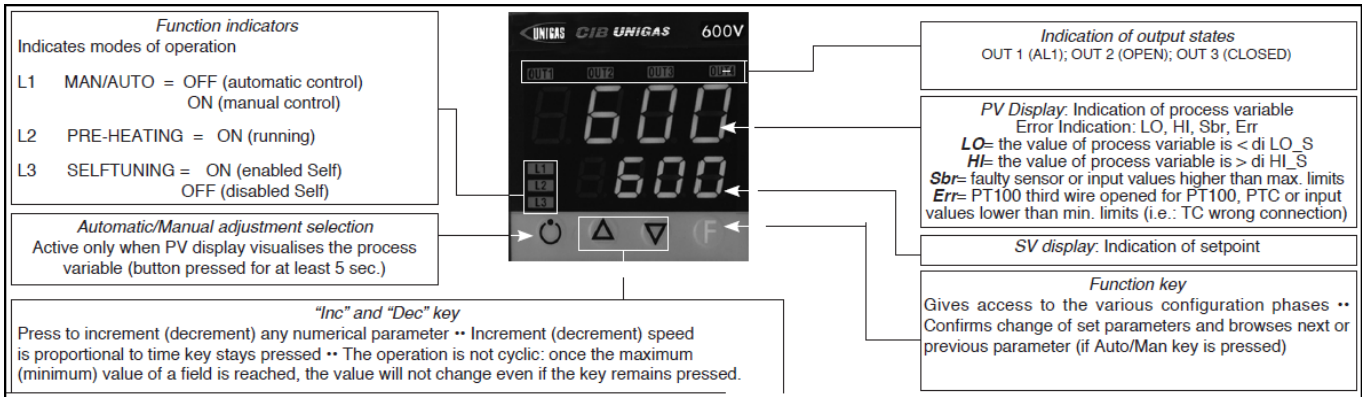

Regulation of the set-point = **80**
It can be modified by using arrows "up" and "down".
By pushing **F** you go to parameters:

Hy.P	10 (hysteresis positive for output 1 terminals 21-22 (ex Q13-Q14)
Hy.n	-5 (hysteresis negative for output 1 terminals 21-22 (ex Q13-Q14)

Keep pushing **F** until you see **PASS**, release **F** and through the arrows set **99**, push **F** and visualize **Pro** (protection code) default is **12**, through the arrows set **128** and push **F,** keep it pushed until all parameters **InF**, **CFG**, **InP**, **Out**, **PASS** are visualized.

CFG	
S.tun	0
hPb	1,2
hIt	5,83
hdt	1,33
…	

InP	
….	
tyP	2 (thermocouple **K** 0÷1300°C) / 0 (thermocouple **J** 0÷1000°C)
…	
dP_S	0 (no decimal) / 1 (1 decimal)
Lo.S	0 (min. sensor scale)
Hi.S	1300 (max sensor scale for tc **K**) / 1000 (max sensor scale for tc **J**)
oFS	0 (offset of input correction)
Lo.L	0 (lower set-point range limit)
Hi.L	1300 (upper set-point range limit) per tc **K** / 1000 for tc **J**

Out	
A1.r	0
…	
A1.t	3 (mode AL1 =inverse-relative-normal)
…	
rL.1	2 (AL1)
rL.2	18 (open)
rL.3	19 (close)
rEL	0
A.ty	9 (type of servocontrol command)
Ac.t	12 (servocontrol running time: SQN72.4…/STA12..=12; SQM40.265=30)
t_Lo	2
t_Hi	0.0
t.on	2
t.oF	0.0
dE.b	0,1 (dead zone in % of end scale)

PAS	99 then push and keep pushed **F** until visualization of **Hrd**
Hrd	
…	
CtrL	6 (PID warm)
AL.nr	1
but	1
diSP	0
Ld.1	1
Ld.2	28
Ld.3	20

Keep pushed **F** until you visualize **PASS**, release **F** and through the arrows set **99**, push **F** and visualize **Pro** (protection code) from **128**, through the arrows, bring it back to **12,** and keep **F** pushed until you come back to set-point value.

Manual operation:
Keep pushed the lower left key for at least 5 sec.
The instrument will enter the "MAN" mode (see also "Ld1" switching on).
Through the arrows, "Open" and "Close" outputs are activated.
To come back to normal working keep the lower left key pushed for at least 5 sec.

Software switch off :
By keeping pushed keys **Arrow up** + **F** for more than 5 sec. the instrument switches off the software, does not command the outputs and visualize only the variable of process measured by the probe.
To restore keep pushed **F** for more than 5 sec.

RWF50.2x & RWF50.3x

User manual

M12922CB Rel.1.0 07/2012

DEVICE INSTALLATION

Install the device using the relevant tools as shown in the figure.
To wire the device and sensors, follow the instructions on the burner wiring diagram.

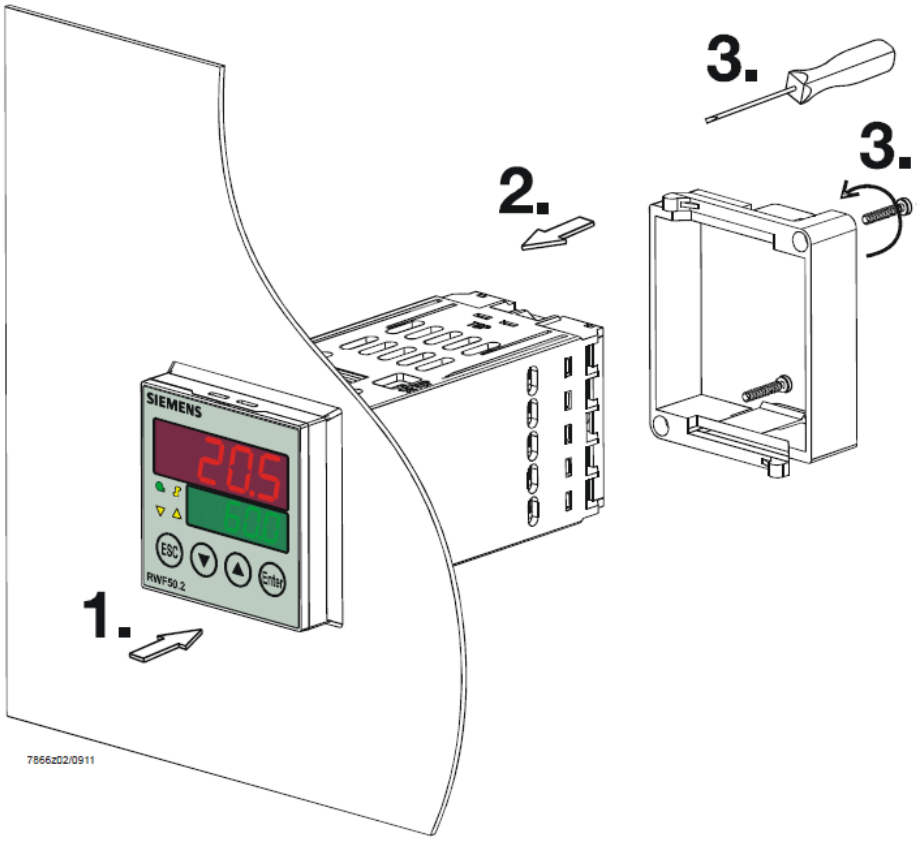

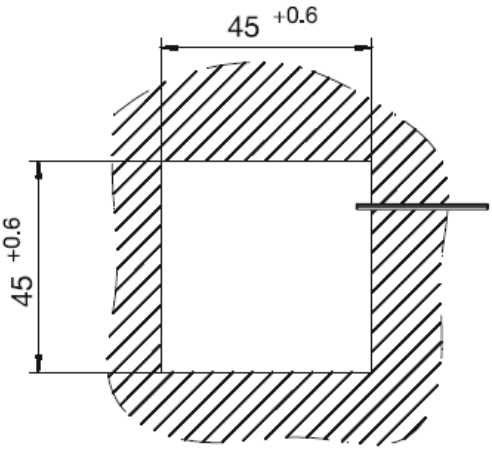

FRONT PANEL

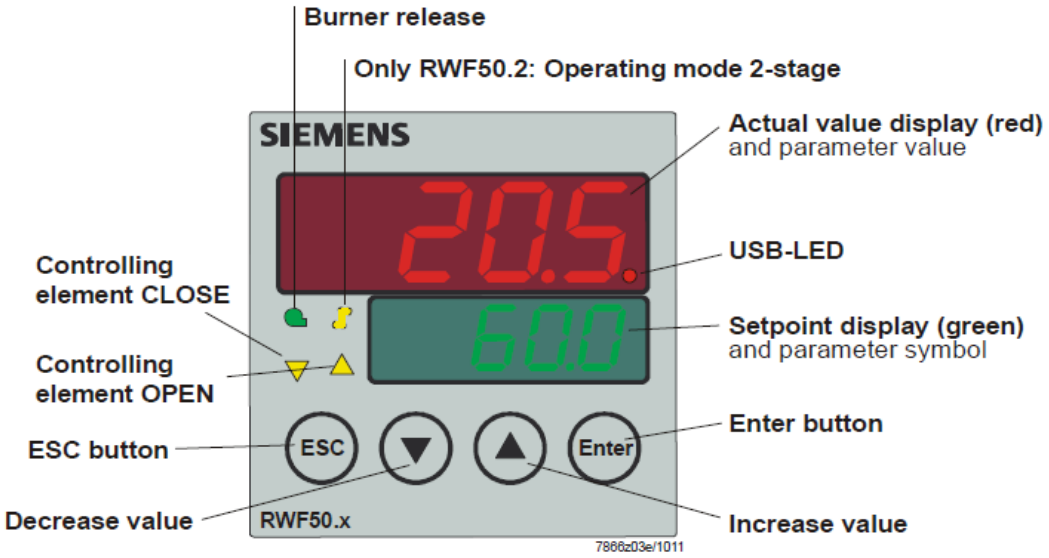

NAVIGATION MENU

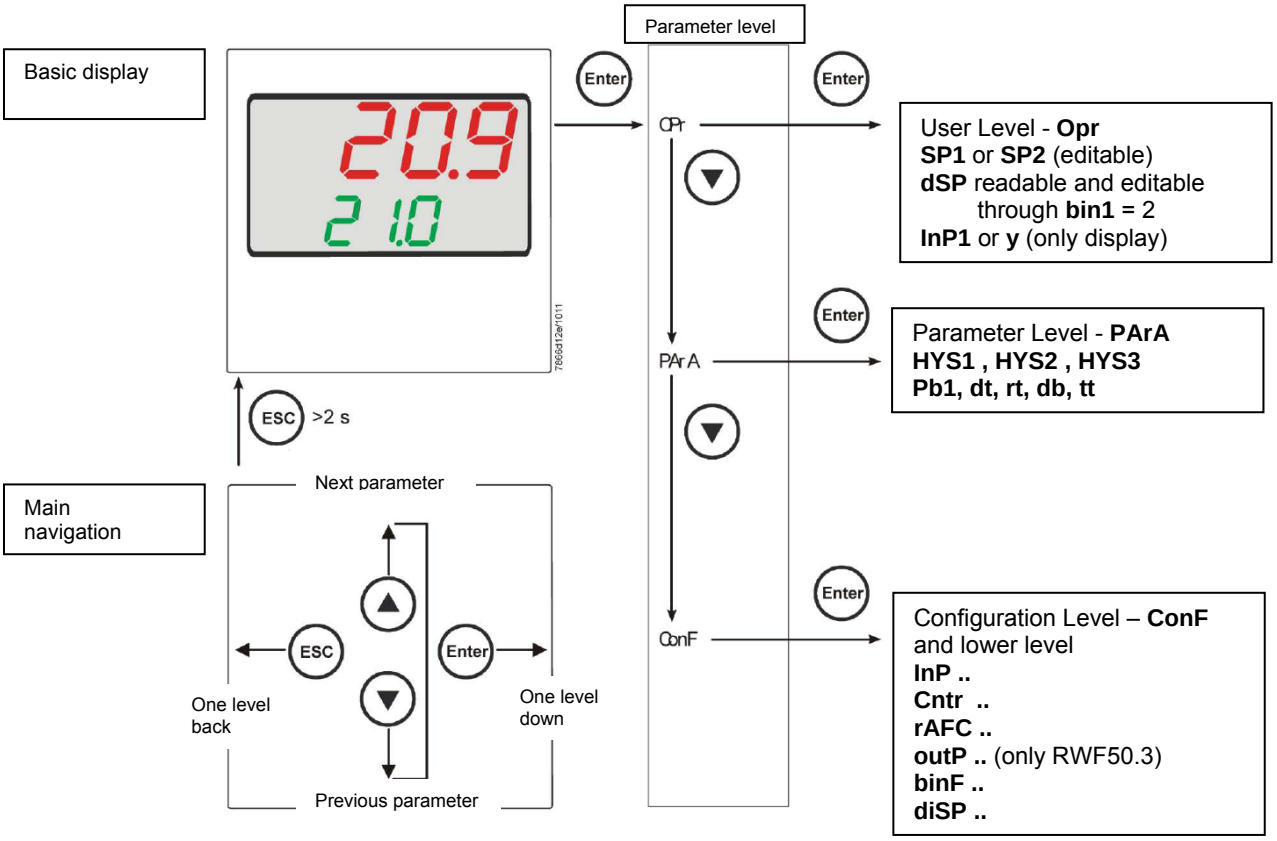

RWF5 is preset good for 90% of applications. However, you can set or edit parameters as follow:

Set-point: set or modification:
When the burner is in stand-by, (safety loop open, that is terminals 3-4/T1-T2 on the 7 pole plug open) push the **Enter** button: on the lower display (green) **Opr** appears; push **Enter** again and in the same display **SP1** appears. Push **Enter** again and the lower display (green **SP1**) flashes. Using the **up and down arrows** change the set-point on the upper display (red).Push **Enter** to confirm and push **ESC** more times to get the home position.

PID parameters set and modifications (see table below):

- Push **Enter** button, on the green display **Opr** appears; using the **down arrow,** scroll until group **PArA** is reached and push **Enter**.
- on the green display **Pb1** e appears and on the red one the set parameter.
- Push is sequence the **down or up** arrow the menu is scrolled.
- Push **Enter** to select and the **arrows** to choose the desired value. **Enter** to confirm.

Parameter	Display	Range	Factory setting	Remarks
Proportional band	PB.1	1… 9999 digit	10	Typical value for temperature
Derivative action	dt	0… 9999 sec.	80	Typical value for temperature
Integral action	rt	0… 9999 sec.	350	Typical value for temperature
Dead band (*)	db	0… 999,9 digit	1	Typical value
Servocontrol running time	tt	10… 3000 sec.	15	Set servocontrol running time
Switch-on differential (*)	HYS1	0,0… -1999 digit	-5	Value under setpoint below which the burner switches back on (1N-1P closes)
Switch-off differential 2° stage (*)	HYS2	0,0 … HYS3	3	(enable only with parameter **bin1** = 4)
Upper switch-off differential (*)	HYS3	0,0… 9999 digit	5	Value over setpoint above which the burner switches off (1N-1P opens)
Switch-on differential on cooling controller (*)	HYS4	0,0… 9999 digit	5	Do not used (enable only with parameter **CACt** = 0)
Switch-off differential 2° stage on cooling controller (*)	HYS5	HYS6…0,0 digit	5	Do not used (enable only with parameters **CACt** = 0 and **bin1** = 4)
Upper switch-off differential on cooling controller (*)	HYS6	0,0… -1999 digit	5	Do not used (enable only with parameter **CACt** = 0)
Delay modulation	q	0,0… 999,9 digit	0	Do not alter

(*)Parameters affected by setting of decimal place (**ConF > dISP** parameter **dECP**)

Setting the kind of sensor to be connected to the device:

- push the **Enter** button: on the lower display (green) **Opr** appears. Using the **up and down arrows** find **ConF.** Push **Enter** to confirm.
- Now on the green display the group **InP** appears. Push **Enter** and **InP1** is displaied. Enter to confirm.
- You are inside **InP1**; the green display shows **Sen1 (sensor type)**, while the red display shows the chosen sensor code
- Push **Enter** to enter the **Sen1** parameter, then choose the desired sensor using the **arrows.** Push **Enter** to confirm and **ESC** to escape.
- Once selected the sensor, you can modify all the other parameters using **up and down arrows** according to the tables here below.

ConF > InP >InP1

Parameter	Value	Description
SEn1 type of sensor for analog input 1	**1**	**Pt100 3 fili**
	2	Pt100 2 fili
	3	Pt1000 3 fili
	4	Pt1000 2 fili
	5	Ni1000 3 fili
	6	Ni1000 2 fili
	7	0 ÷ 135 ohm
	15	0 ÷ 20mA
	16	4 ÷ 20mA
	17	0 ÷ 10V
	18	0 ÷ 5V
	19	1 ÷ 5V
OFF1 sensor offset	-1999..**0**.. +9999	Using the measured value correction (offset), a measured value can be corrected to a certain degree, either up or down
SCL1 scale low level	-1999..**0**.. +9999	In the case of a measuring transducer with standard signal, the physical signal is assigned a display value here (for input ohm, mA, V)
SCH1 scale high level	-1999..**100**.. +9999	In the case of a measuring transducer with standard signal, the physical signal is assigned a display value here (for input ohm, mA, V)
dF1 digital filter	0…**0,6**…100	Is used to adapt the digital 2nd order input filter (time in s; 0 s = filter off)
Unit temperature unit	**1** 2	**1 = degrees Celsius** 2 = degrees Fahrenheit

(**bold** = factory settings)

Remark:
RWF50.2 e RWF50.3 cannot be connected to thermocouples.
If thermocouples have to be connected, convert the signal to a 4-20 mA one and set the RWF accordingly.

ConF > Cntr

Parameter	Value	Description
CtYP controller type	**1** 2	**1 = 3-position controller (open-stop-close only RWF50.2)** 2 = continuative action controller (only RWF50.3)
CACt control action	**1** 0	**1 = heating controller** 0 = cooling controller
SPL least value of the set-point range	-1999..**0**..+9999	set-point limitation prevents entry of values outside the defined range
SPH maximum value of the set-point range	-1999..**100**..+9999	set-point limitation prevents entry of values outside the defined range
oLLo set-point limitation start, operation limit low	**-1999**.... +9999	lower working range limit
oLHi set-point limitation end, operation limit high	-1999.... **+9999**	upper working range limit

(**bold** = factory settings)

ConF > rAFC

Activation boiler shock termic protetion:
RWF50.. can activate the thermal shock protection only on sites where the set-point is lower than 250°C and according to **rAL** parameter.

Parameter	Value	Description
FnCT function	**0** 1 2	Choose type of range degrees/time **0 = deactivated** 1 = Kelvin degrees/minute 2 = Kelvin degrees/hour
rASL ramp rate	**0,0 …** 999,9	Slope of thermal shock protection (only with functions 1 and 2)
toLP tolerance band ramp	**0**…9999	width of tolerance band (in K) about the set-point **0 = tolerance band inactive** 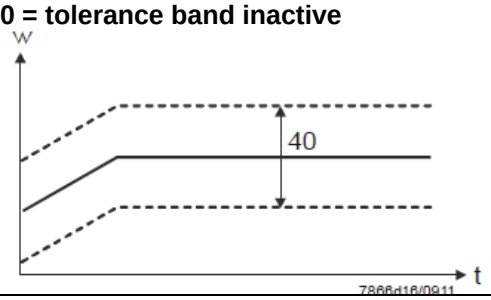
rAL ramp limit	**0**…250	Ramp limit. When this value is lower than the temperature set-point, the RWF controls the output increasing the temp set point step by step according to rASL. If this is over the temp set point, the control is performed in cooling.

(**bold** = factory settings)

ConF > OutP (parameter under group only for RWF50.3)

Parameter	Value	Description
FnCt tipo di controllo	1 **4**	1 = analog input 1 doubling with possibility to convert (depending on par **SiGn**) **4 = modulation controller**
SiGn type of output signal	**0** 1 2	physical output signal (terminals A+, A-) **0 = 0÷20mA** 1 = 4÷20mA 2 = 0÷10V
rOut Value when out of input range	**0**…101	signal (in percent) when measurement range is crossed
oPnt zero point	-1999…**0**..+9999	value range of the output variable is assigned to a physical output signal Per default, the setting corresponds to 0...100% angular positioning for the controller outputs (terminals A+, A-) (effective only with **FnCt** = 1)
End End value	-1999…**100**..+9999	value range of the output variable is assigned to a physical output signal Per default, the setting corresponds to 0...100% angular positioning for the controller outputs (terminals A+, A-) (effective only with **FnCt** = 1)

(**bold** = factory settings)

ConF > binF

Parameter	Value	Description
bin1 digital inputs (terminals DG - D1)	**0** 1 2 4	**0 = without function** 1 = set-point changeover (SP1 / SP2) 2 = set-point shift (**Opr** > **dSP** parameter = value of set-point modify) 4 = changeover of operating mode open – modulating operation; close – 2 stage operation.

(**bold** = factory settings)

ConF > dISP

Parameter	Value	Description
diSU upper display (red)	0 **1** 4 6 7	display value for upper display: 0 = display power-off **1 = analog input value** 4 = Controller's angular positioning 6 = set-point value 7 = end value with thermal shock protection
diSL lower display (green)	0 1 4 **6** 7	display value for lower display: 0 = display power-off 1 = analog input value 4 = Controller's angular positioning **6 = set-point value** 7 = end value with thermal shock protection
tout timeout	0..**180**..250	time (s) on completion of which the controller returns automatically to the basic display, if no button is pressed
dECP decimal point	**0** 1 2	**0 = no decimal place** 1 = one decimal place 2 = two decimal places
CodE level lockout	**0** 1 2 3	**0 = no lockout** 1 = configuration level lockout (ConF) 2 = Parameter and configuration level lockout (PArA & ConF) 3 = keyboard lockout

(**bold** = factory settings)

Manual control :

- in order to manual change the burner load, while firing keep pushing the **ESC** button for more than 5 s; on the lower green display **Hand** appears.
- using the **UP** and **DOWN** arrows, the load varies.
- Keep pushing the **ESC** button for getting the normal operation again.
- **NB:** every ime the device shuts the burner down (start led switched off - contact 1N-1P open), the manual control is not active.

Device self-setting (auto-tuning):
If the burner in the steady state does not respond properly to heat generator requests, you can activate the Device's self-setting function, which recalculates PID values for its operation, deciding which are most suitable for the specific kind of request

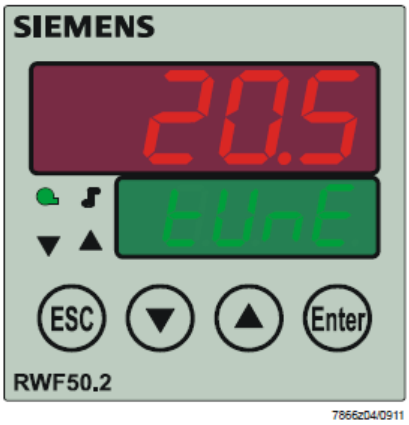

Follow the below instructions:
push the **UP** and **DOWN** arrows for more than 5 s; on the green lower display **TUNE** appears. Now the device pushes the burner to increase and decrease its output. During this time, the device calculates PID parameters (**Pb1, dt** and **rt**). After the calculations, the TUNE is automatically deactivated and the device has already stored them.
In order to stop the Auto-tuning function while it works, push again the **UP** and **DOWN** arrows for more than 5 s. The calculated PID parameters can be manually modified following the previously described instructions.

Display of software version :

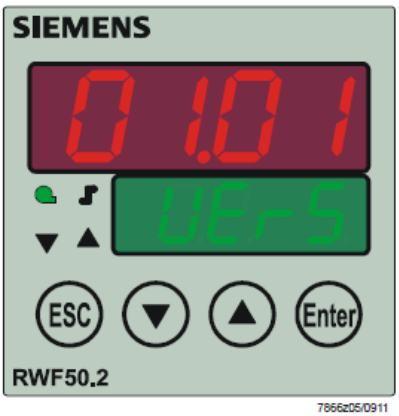

The software version is shown by pushing **Enter + UP arrow** on the upper display

Electric connection :

With 7 pins connector version

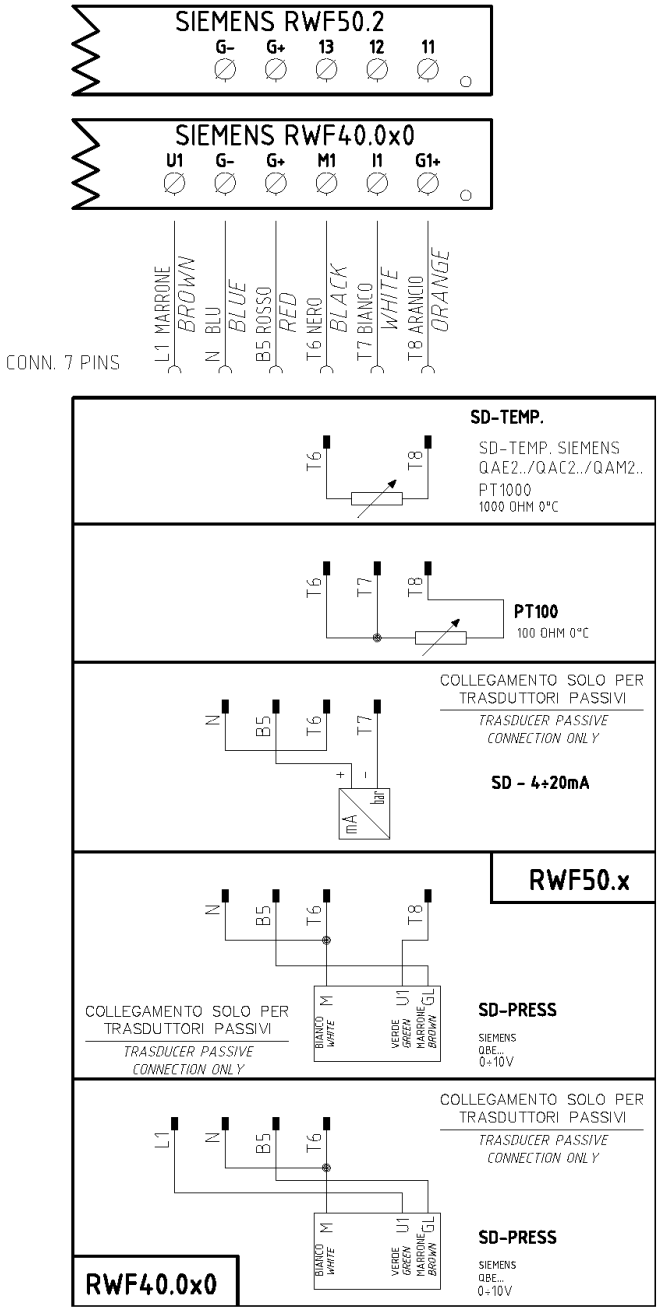

With terminals version

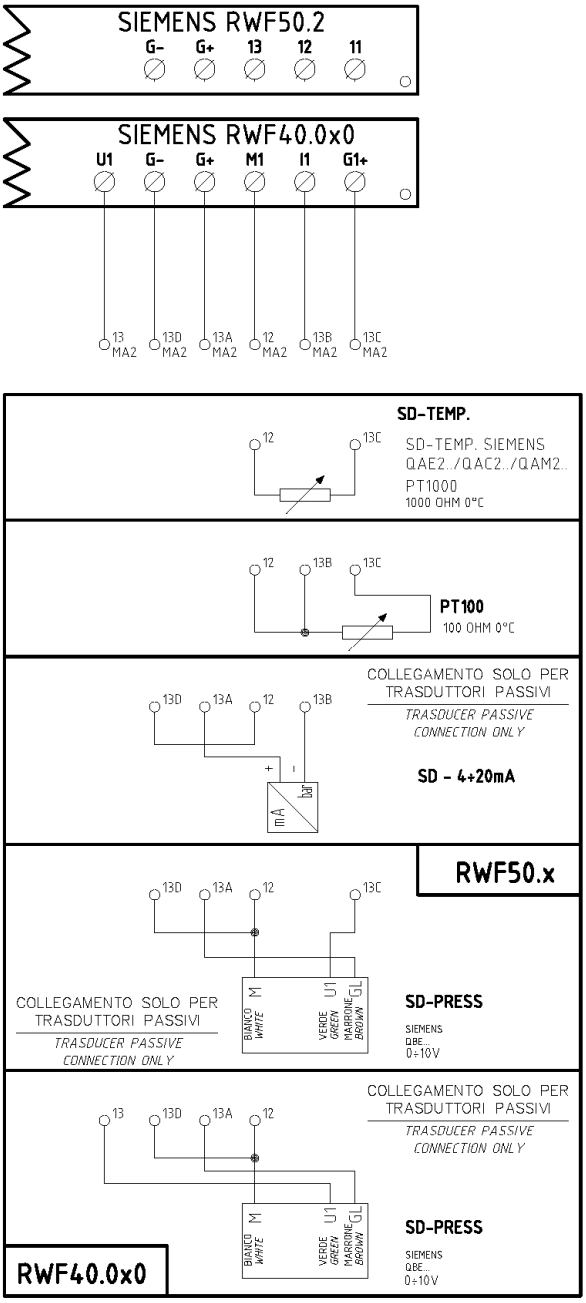

Matches terminals between RWF50.2 and RWF40.0x0

Parameters summarising for RWF50.2x:

Navigation menù	Conf					Conf									
	Inp														
	Inp1					Cntr		diSP	PArA						Opr
Types of probe	**SEn1**	**OFF1**	**SCL1**	**SCH1**	**Unit**	**SPL**	**SPH**	**dECP**	**Pb. 1**	**dt**	**rt**	**tt**	**HYS1 (*)**	**HYS3 (*)**	**SP1 (*)**
Siemens QAE2120…	6	0	needless	needless	1	30	95	1	10	80	350	(#)	-5	5	80 °C
Siemens QAM2120..	6	0	needless	needless	1	0	80	1	10	80	350	(#)	-2,5	2,5	40°C
Pt1000 (130°C max.)	4	0	needless	needless	1	30	95	1	10	80	350	(#)	-5	5	80°C
Pt1000 (350°C max.)	4	0	needless	needless	1	0	350	1	10	80	350	(#)	-5	10	80°C
Pt100 (130°C max.)	1	0	needless	needless	1	0	95	1	10	80	350	(#)	-5	5	80°C
Pt100 (350°C max)	1	0	needless	needless	1	0	350	1	10	80	350	(#)	-5	10	80°C
Probe 4÷20mA / 0÷1,6bar	16	0	0	160	needless	0	160	0	5	20	80	(#)	0	20	100 kPa
Probe 4÷20mA / 0÷3bar	16	0	0	300	needless	0	300	0	5	20	80	(#)	0	20	200 kPa
Probe 4÷20mA / 0÷10bar	16	0	0	1000	needless	0	1000	0	5	20	80	(#)	0	50	600 kPa
Probe 4÷20mA / 0÷16bar	16	0	0	1600	needless	0	1600	0	5	20	80	(#)	0	80	600 kPa
Probe 4÷20mA / 0÷25bar	16	0	0	2500	needless	0	2500	0	5	20	80	(#)	0	125	600 kPa
Probe 4÷20mA / 0÷40bar	16	0	0	4000	needless	0	4000	0	5	20	80	(#)	0	200	600 kPa
Siemens QBE2002 P4	17	0	0	400	needless	0	400	0	5	20	80	(#)	0	20	200 kPa
Siemens QBE2002 P10	17	0	0	1000	needless	0	1000	0	5	20	80	(#)	0	50	600 kPa
Siemens QBE2002 P16	17	0	0	1600	needless	0	1600	0	5	20	80	(#)	0	80	600 kPa
Siemens QBE2002 P25	17	0	0	2500	needless	0	2500	0	5	20	80	(#)	0	125	600 kPa
Siemens QBE2002 P40	17	0	0	4000	needless	0	4000	0	5	20	80	(#)	0	200	600 kPa
Segnale 0÷10V	17	0	to be fixed	to be fixed	needless	to be fixed	to be fixed	to be fixed	5	20	80	(#)	to be fixed	to be fixed	to be fixed
Segnale 4÷20mA	16	0	to be fixed	to be fixed	needless	to be fixed	to be fixed	to be fixed	5	20	80	(#)	to be fixed	to be fixed	to be fixed

NOTE :
(#) tt – servo control run time
SQL33 ; STM30; SQM10; SQM40; SQM50; SQM54 = **30** (secondi) - STA12B3.41; SQN30.251; SQN72.4A4A20 = **12** (secondi)
(*)These values are factory set - values **must be** set during operation at the plant based on the real working temperature/pressure value.
WARNING : With pressure probes the parameters SP1, SCH, SCL, HYS1, HYS3 must be selected, and visualized in kPa (kilo Pascal). (1bar = 100.000Pa = 100kPa)

APPENDIX: PROBES CONNECTION

To assure the utmost comfort, the control system needs reliable information, which can be obtained provided the sensors have been installed correctly. Sensors measure and transmit all variations encountered at their location.

Measurement is taken based on design features (time constant) and according to specific operating conditions.With wiring run in raceways, the sheath (or pipe) containing the wires must be plugged at the sensor's terminal board so that currents of air cannot affect the sensor's measurements.

Ambient probes (or ambient thermostats)

Installation

The sensors (or room thermostats) must be located in reference rooms in a position where they can take real temperature measurements without being affected by foreign factors.

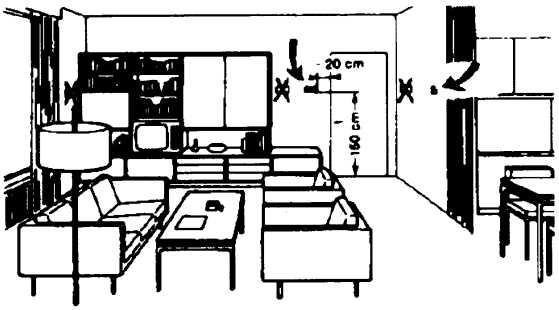

It's good to be admired …even better to be effective

Heating systems: the room sensor must not be installed in rooms with heating units complete with thermostatic valves. Avoid all sources of heat foreign to the system.

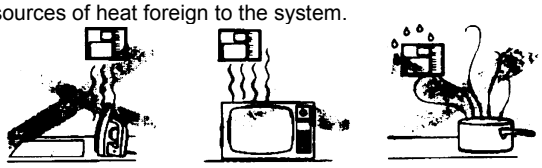

Location

On an inner wall on the other side of the room to heating unitsheight above floor 1.5 m, at least 1.5 m away from external sources of heat (or cold).

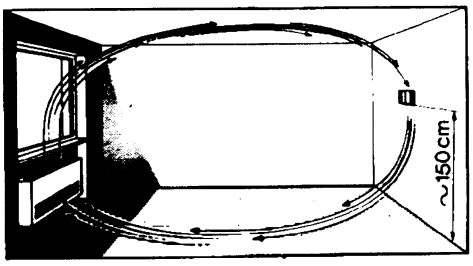

Installation position to be avoided

near shelving or alcoves and recesses, near doors or win-dows, inside outer walls exposed to solar radiation or currents of cold air, on inner walls with heating system pipes, domestic hot water pipes, or cooling system pipes running through them.

Outside probes (weather)

Installation

In heating or air-conditioning systems featuring adjustment in response to outside temperature, the sensor's positioning is of paramount importance.

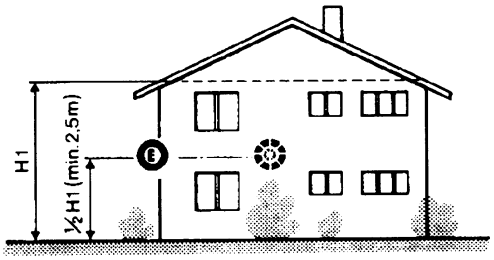

General rule: on the outer wall of the building where the living rooms are, never on the south-facing wall or in a position where they will be affected by morning sun. If in any doubt, place them on the north or north-east façade.

Positions to be avoided

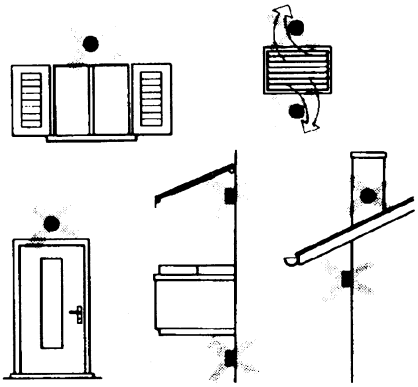

Avoid installing near windows, vents, outside the boiler room, on chimney breasts or where they are protected by balconies, cantilever roofs.

The sensor must not be painted (measurement error).

Duct or pipe sensors

Installing temperature sensors

For measuring outlet air:

- after delivery fan or
- after coil to be controlled, at a distance of at least 0,5 m

For measuring room temperature:

- before return air intake fan and near room's return airintake. For measuring saturation temperature: after mist eliminator.

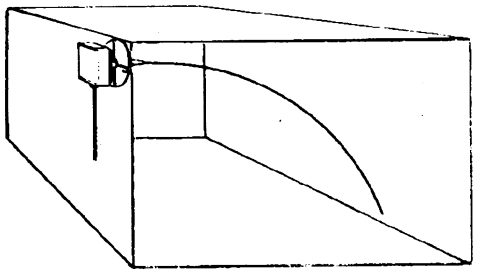

Bend 0.4m sensor by hand (never use tools) as illustrated.

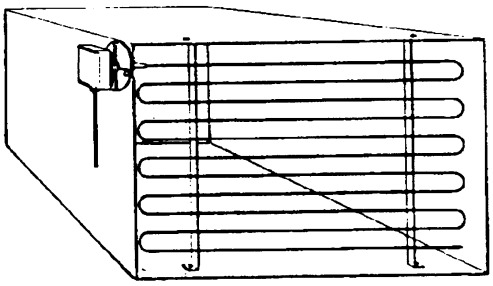

Use whole cross-section of duct, min. distance from walls 50 mm, radius of curvature 10 mm for 2m or 6m sensors.

Installing combined humidity sensors

As max. humidity limit sensor on outlet (steam humidifiers).

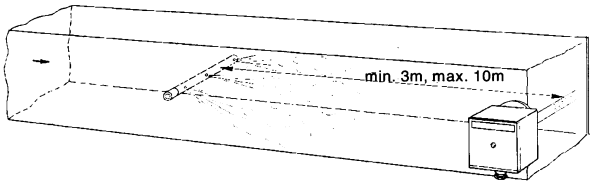

Installing pressure sensors

A - installation on ducts carrying fluids at max. temperature 80°C

B - installation on ducts at temperature over 80°C and for refrigerants

C - installation on ducts at high temperatures:

- increase length of siphon
- place sensor at side to prevent it being hit by hot air coming from the pipe.

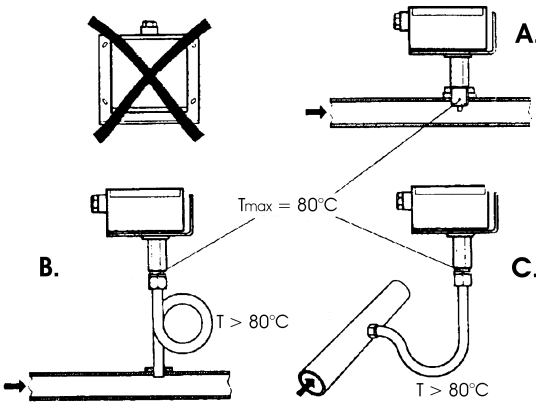

Installing differential pressure sensors for water

- Installation with casing facing down not allowed.-With temperature over 80°C, siphons are needed.
- To avoid damaging the sensor, you must comply with the following instructions

when installing:

- make sure pressure difference is not greater than thevalue permitted by the sensor
- when there are high static pressures, make sure you insert shutoff valves A-B-C.

Putting into operation

Start disable

1=open C1=open C

2=open A2=close B

3=open B3=close A

4= close C

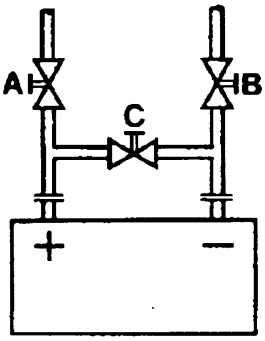

Immersion or strap-on sensors

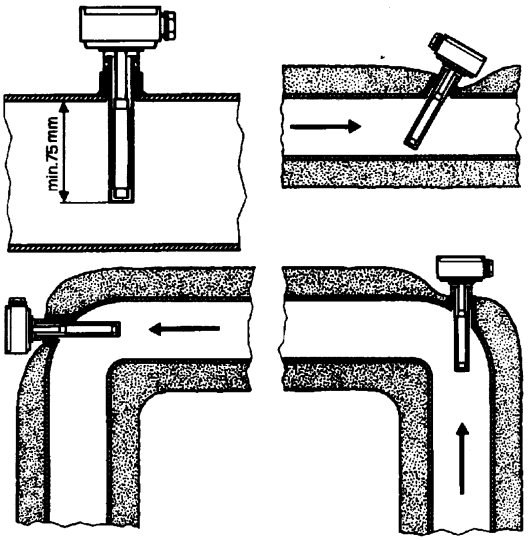

Immersion probes installation

Sensors must be installed on the stretch of pipe in which fluid circulates all the time.

The rigid stem (sensing element doing the measuring) must be inserted by at least 75mm and must face the direction of flow.

Recommended locations: on a bend or on a straight stretch of pipe but tilted by 45° and against the flow of fluid.

Protect them to prevent water from infiltrating (dripping gates, condensation from pipes etc.)

Installing QAD2.. strap-on sensors

Make sure fluid is circulating in the chosen location.

Eliminate insulation and paintwork (including rust inhibitor) on a min. 100mm length of pipe.

Sensors come with straps for pipes up to 100 mm in diameter

Placing the probes (QAD22.../QAE21.../QAP21.../RCA...)

With pumps on outlet

with 3 ways valves / with 4 ways valves

Panel system / burner control

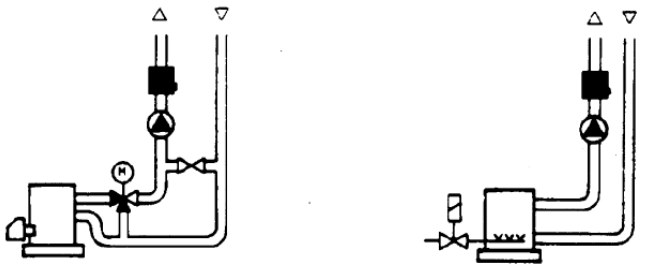

With pumps on return

with 3 ways valves / with 4 ways valves

Strap-on or immersion sensors?

QAD2.. strap-on sensors

Advantages :

- 10 sec. time constant
- Installed with system running (no plumbing work)
- Installation can be changed easily if it proves incorrect.

Limits:

- Suitable for pipe diameters max. 100 mm
- Can be affected by currents of air etc.

QAE2... immersion sensors

Advantages:

- Measure "mean" fluid temperature
- No external influence on measurement such as: currents of air, nearby pipes etc.

Limits:

- Time constant with sheath: 20 sec.
- Hard to change installation position if it proves incorrect.

Installing differential pressure probes for air

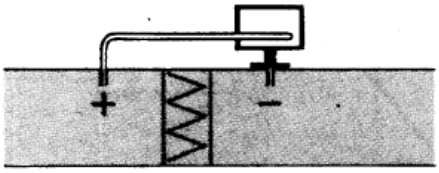

A - Control a filter (clogging)

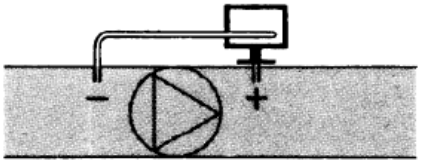

B - Control a fan (upstream/downstream)

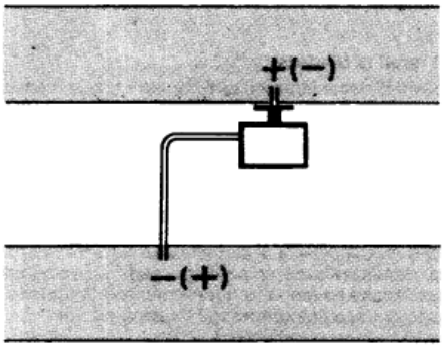

C - Measurement of difference in pressure between two ducts

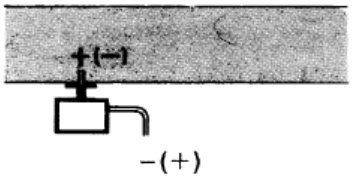

D - Measurement of difference in pressure between two rooms or of inside of duct and outside

Basic principles

Measuring static pressure(i.e. pressure exerted by air on pipe walls)

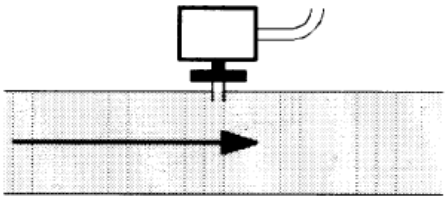

Measuring dinamic pressure

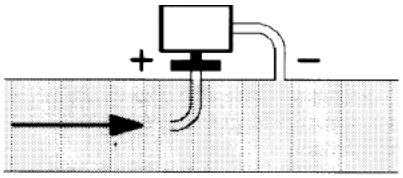

$$Pd = \frac{y\,\vartheta^2}{2g}$$

Key

y	Kg/m^3, specific weight of air
□	m/s, air speed
g	9.81 m/s^2 gravity acceleration
Pd	mm C.A., dynamic pressure

Measuring total pressure

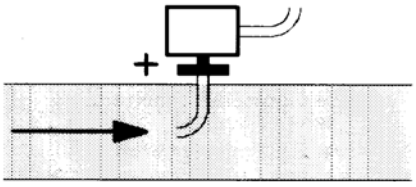

Spare parts

Description	Code
Modulator RWF50.2 (uscita a 3 punti - apri, fermo, chiudi)	2570148
Modulator RWF50.3 (uscita continua 0÷20mA, 4÷20mA, 0÷10V)	2570149
Temperature probe Siemens QAE2120.010A (30÷130°C)	2560101
Temperature probe Siemens QAM2120.040 (-15÷+50°C)	2560135
Thermoresistor Pt1000 ø6mm L100mm (30÷130°C)	2560188
Thermoresistor Pt1000 ø10mm L200mm (0÷350°C)	2560103
Thermoresistor Pt100 ø10mm L200mm (0÷350°C)	2560145
Thermoresistor Pt100 ø8mm L85mm (0÷120°C)	25601C3
Pressure probe Siemens QBE2.. P4 (0÷4bar)	2560159
Pressure probe Siemens QBE2.. P10 (0÷10bar / signal 0÷10V)	2560160
Pressure probe Siemens QBE2.. P16 (0÷16bar / signal 0÷10V)	2560167
Pressure probe Siemens QBE2.. P25 (0÷25bar / signal 0÷10V)	2560161
Pressure probe Siemens QBE2.. P40 (0÷40bar / signal 0÷10V)	2560162
Pressure probe Danfoss MBS 3200 P 1,6 (0÷1,6bar / signal 4÷20mA)	2560189
Pressure probe Danfoss MBS 3200 P 10 (0÷10bar / signal 4÷20mA)	2560190
Pressure probe Danfoss MBS 3200 P 16 (0÷16bar / signal 4÷20mA)	2560191
Pressure probe Danfoss MBS 3200 P 25 (0÷25bar / signal 4÷20mA)	2560192
Pressure probe Danfoss MBS 3200 P 40 (0÷40bar / signal 4÷20mA)	2560193
Pressure probe Siemens 7MF1565-3BB00-1AA1 (0÷1,6bar / signal 4÷20mA)	25601A3
Pressure probe Siemens 7MF1565-3CA00-1AA1 (0÷10bar / signal 4÷20mA)	25601A4
Sonda di pressione Siemens 7MF1565-3CB00-1AA1 (0÷16bar / signal	25601A5
Pressure probe Siemens 7MF1565-3CD00-1AA1 (0÷25bar / signal 4÷20mA)	25601A6
Pressure probe Siemens 7MF1565-3CE00-1AA1 (0÷40bar / signal 4÷20mA)	25601A7
Pressure probe Gefran E3E B1V6 MV (0÷1,6bar / segnale 4÷20mA)	25601C4
Pressure probe Danfoss E3E B01D MV (0÷10bar / segnale 4÷20mA)	25601C5
Pressure probe Danfoss E3E B16U MV (0÷16bar / segnale 4÷20mA)	25601C6
Pressure probe Danfoss E3E B25U MV (0÷25bar / segnale 4÷20mA)	25601C7
Pressure probe Danfoss E3E B04D MV (0÷40bar / segnale 4÷20mA))	25601C8

Note: Specifications and data subject to change. Errors and omissions excepted.

KM3 Modulator

USER MANUAL

M12927CA Rel.1.0 10/2020

MOUNTING

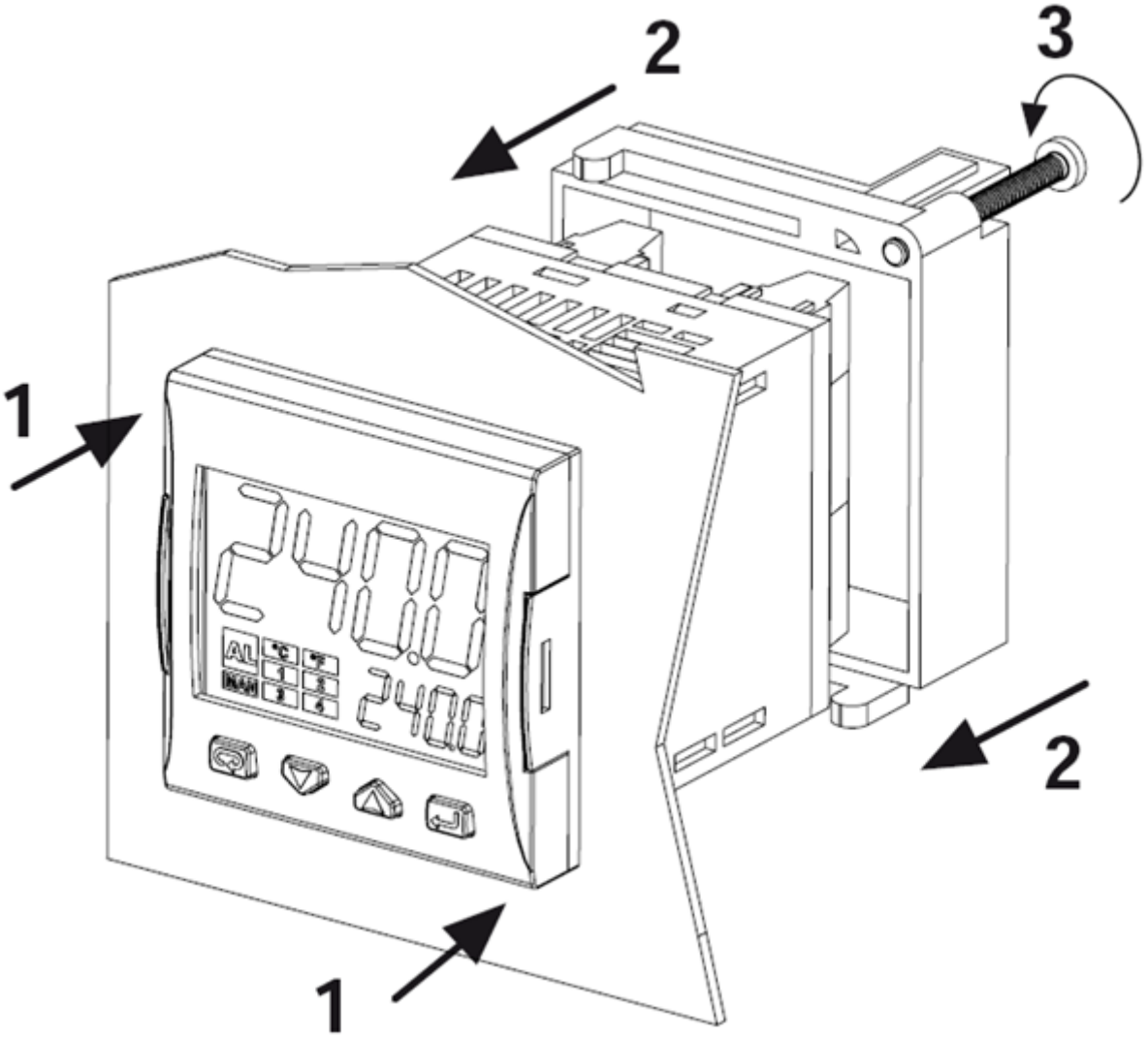

DISPLAY AND KEYS

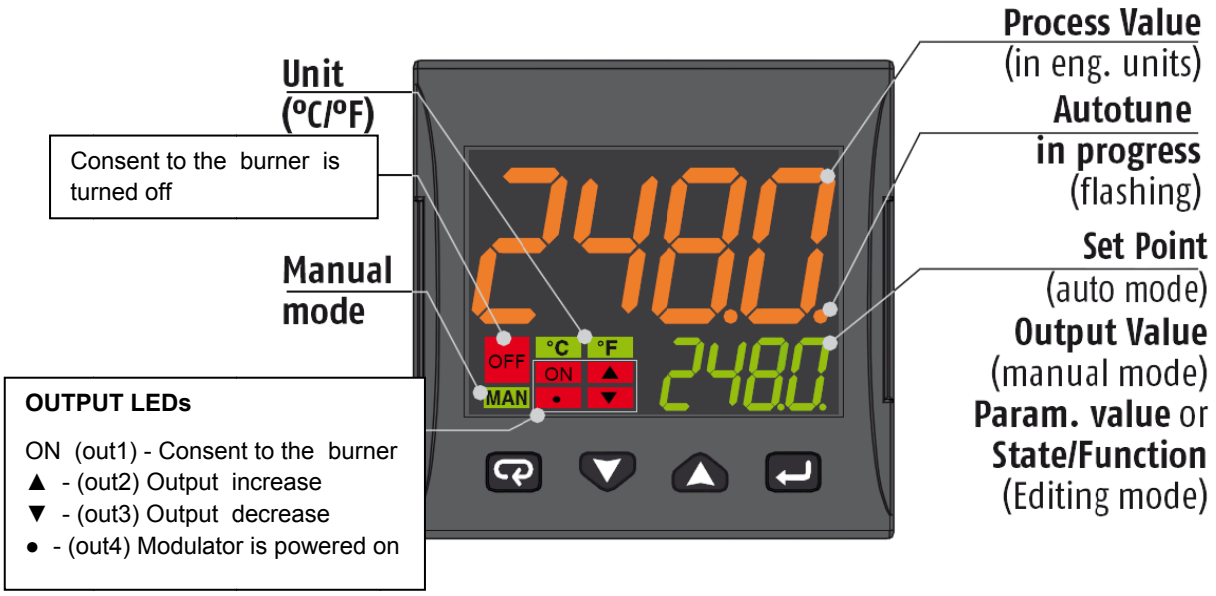

	Operator Mode	Editing Mode
↵	Access to: - Operator Commands (Timer, Setpoint selection ...) - Parameters - Configuration	Confirm and go to Next parameter
▲	Access to: - Operator additional information (Output value, running time ...)	Increase the displayed value or select the next element of the parameters list
▼	Access to: - Set Point	Decrease the displayed value or select the previous element
↻	Programmable key: Start the programmed function (Autotune, Auto/Man, Timer ...)	Exit from Operator commands/Parameter setting/Configuration

CONNECTIONS DIAGRAM

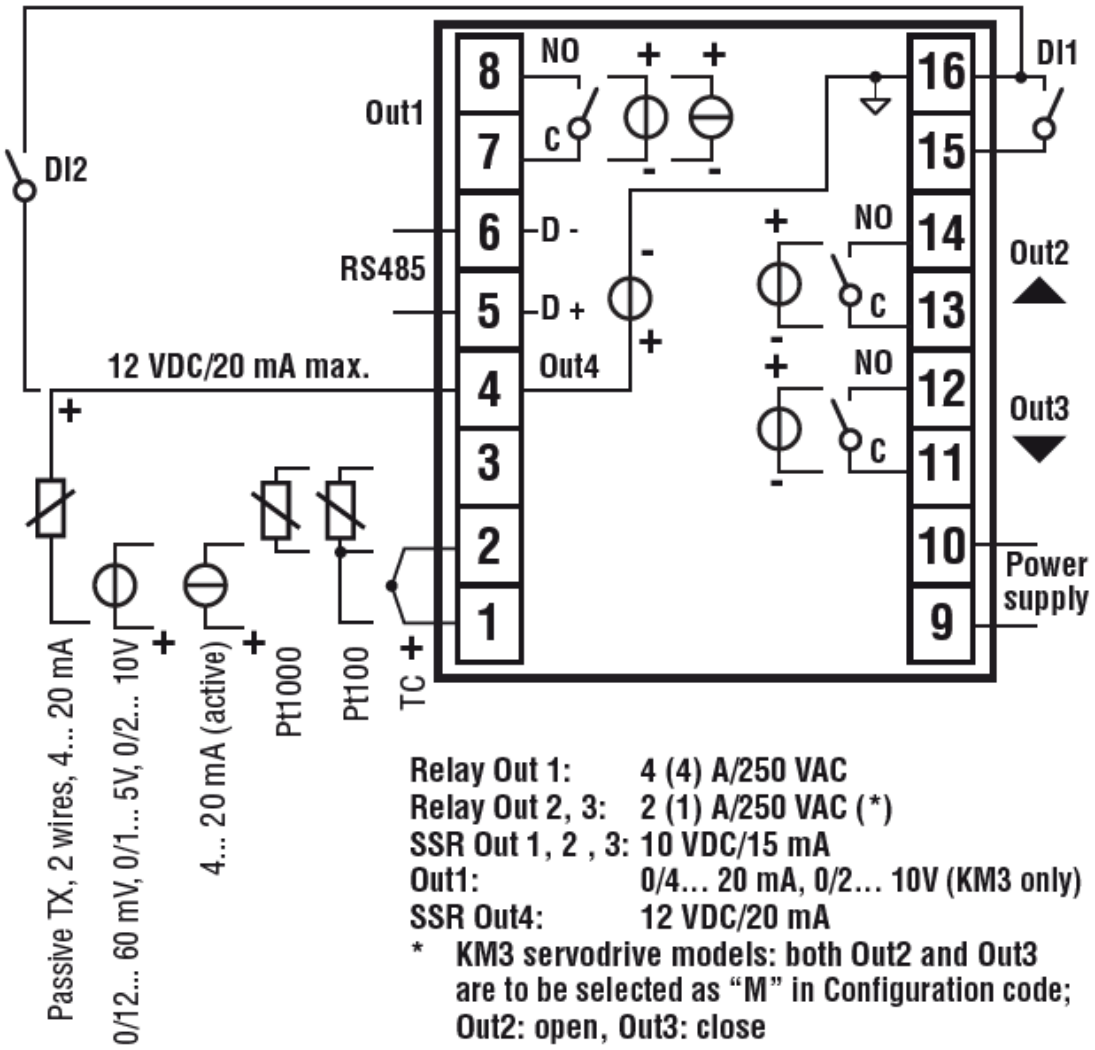

Probe connection:

- **PT1000/NTC/PTC**: between terminal 3 and 2
- **PT 100**: between terminal 3 and 2 with terminal 1
- **Passive pressure probe** 0/4-20 mA: between terminal 4 (+) e 1 (-)
  Note: out4 must be activated (IO4F must be setted to ON)
- **Powered pressure probe** 0/4-20 mA between terminal 4 (power supply), 2 (negative) e 1 (positive)
  Note: set IO4F to ON to activate Out4

Power supply connection:

- **Neutral wire:** terminal 9
- **Phase:** terminal 10 (100…240 Vac)
- Close terminals 15-16 to switch to the set point 2

Output connection:

- **Channel 1:** terminal 7 and 8 (burner on – off)
- **Channel 2:** terminal 11 and 12 (servomotor opens)
- **Channel 3:** terminal 13 and 14 (servomotor closes)

SETPOINT AND HYSTERESIS CONFIGURATION (SP, AL1, HAL1 parameters)

Push the ↵ button to enter into the setpoint configuration:

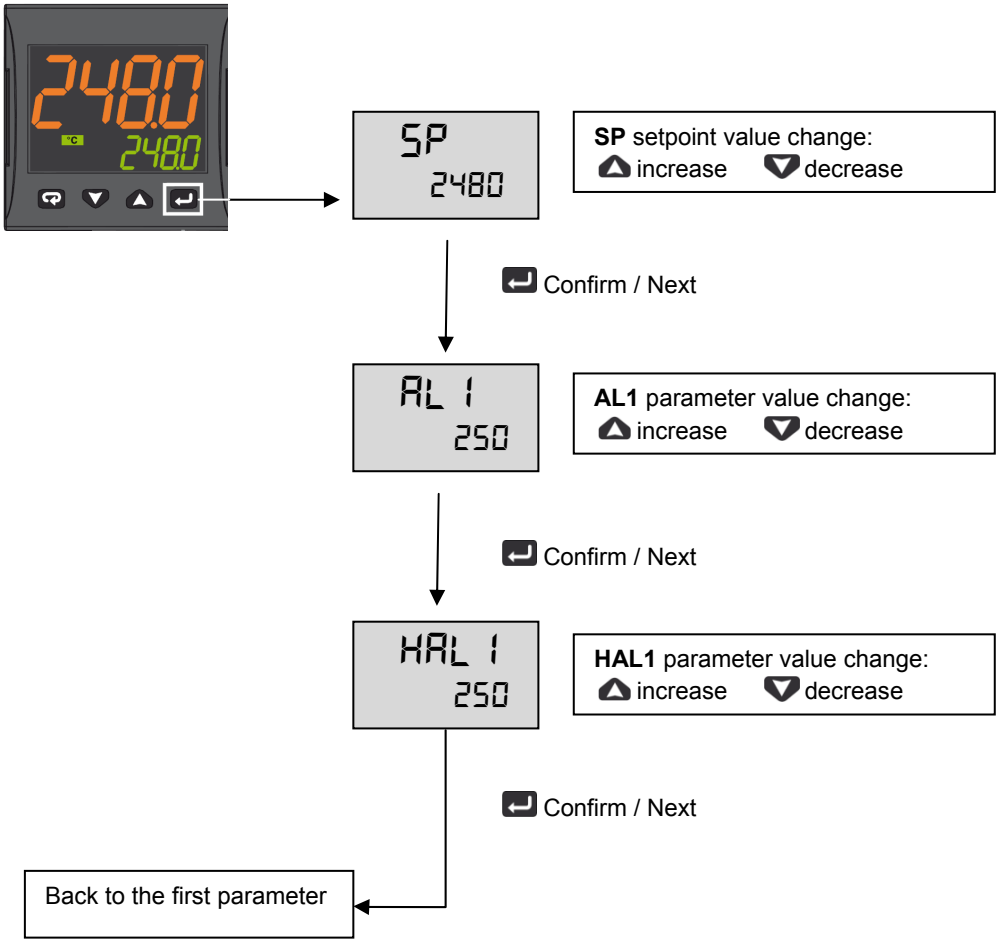

To return to normal mode, press the key for 3 seconds or wait the 10s timeout

Operation example

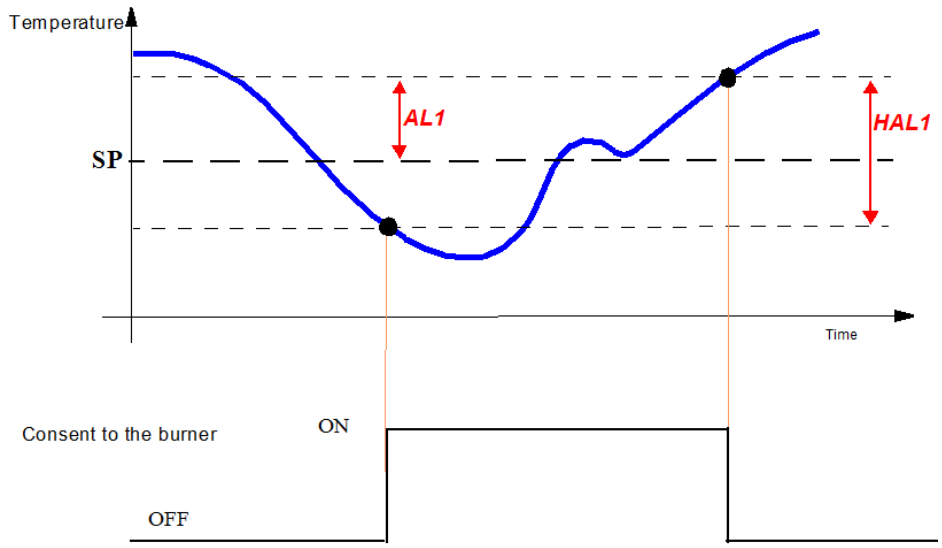

LIMITED ACCESS LEVEL

Proceed as follows to change some parameters that are not visible in standard user mode:

Press the ↵ key for 3 seconds

Password = 20

Access to parameter:

▲	Increase the displayed value
▼	Decrease the displayed value
↵	Confirm and go to next parameter

Param	Description	Values	Default
SEnS	Input type	Pt1 = RTD Pt100 Pt10 = RTD Pt1000 0.20 = 0..20mA 4.20 = 4..20mA Pressure probe 0.10 = 0..10V 2.10 = 2..10V crAL= Thermocouple K	Depends on the probe
SP	Set point 1	SPLL ... SPLH	See page 7
AL1	AL1 threshold	AL1L... AL1H (E.U.)	
HAL1	AL1 hysteresis	1... 9999 (E.U.)	
Pb	Proportional band	1... 9999 (E.U.)	
ti	Integral time	0 (oFF) ... 9999 (s)	
td	Derivative time	0 (oFF) ... 9999 (s)	
Str.t	Servomotor stroke time	5...1000 seconds	
db.S	Servomotor dead band	0...100%	
SPLL	Minimum set point value	-1999 ... SPHL	
SPHL	Maximum set point value	SPLL ... 9999	
dp	Decimal point position	0... 3	
SP 2	Set point 2	SPLL...SPLH	60
A.SP	Selection of the active set point	"SP" ... " nSP"	SP

To exit the parameter setting procedure press the key (for 3 s) or wait until the timeout expiration (about 30 seconds)

Probe parameters configuration MODULATORE ASCON KM3

Parameter Group	inP						AL1		rEG					SP		
Parameter	**Sens**	**dp**	**SSC**	**FSc**	**unit**	**IO4.F (**)**	**AL1 (***)**	**HAL1 (***)**	**Pb (***)**	**ti (***)**	**td (***)**	**Str.t**	**db.S**	**SPLL**	**SPHL**	**SP (***)**
Probes		Dec Point	Scale Min	Scale Max			Off	On	p	i	d	servo time s	Band Mo.	SP Min	SP Max	Set point
Pt1000 (130°C max)	Pt10	1			°C	on	5	10	10	350	1	*	5	30	95	80
Pt1000 (350°C max)	PT10	1			°C	on	10	10	10	350	1	*	5	0	350	80
Pt100 (130°C max)	PT1	1			°C	on	5	10	10	350	1	*	5	0	95	80
Pt100 (350°C max)	Pt1	1			°C	on	10	10	10	350	1	*	5	0	350	80
Pt100 (0÷100°C 4÷20mA)	4.20	1	0	100		on	5	10	10	350	1	*	5	0	95	80
Thermocouple K (1200°C max)	crAL	0			°C	on	20	25	10	350	1	*	5	0	1200	80
Thermocouple J (1000°C max)	J	0			°C	on	20	25	10	350	1	*	5	0	1000	80
4-20mA / 0-1,6barPressure probe	4.20	0	0	160		on	20	20	5	120	1	*	5	0	160	100
4-20mA / 0-10bar Pressure probe	4.20	0	0	1000		on	50	50	5	120	1	*	5	0	1000	600
4-20mA / 0-16bar Pressure probe	4.20	0	0	1600		on	80	80	5	120	1	*	5	0	1600	600
4-20mA / 0-25bar Pressure probe	4.20	0	0	2500		on	125	125	5	120	1	*	5	0	2500	600
4-20mA / 0-40bar Pressure probe	4.20	0	0	4000		on	200	200	5	120	1	*	5	0	4000	600
QBE2002 / 0-25bar Pressure probe	0.10	0	0	2500		0n	125	125	5	120	1	*	5	0	2500	600

Note:

(*) Str.t - Servomotor stroke time
SQL33; STM30; SQM10; SQM40; SQM50; SQM54 = 30 (Seconds)
STA12B3.41; SQN30.251; SQN72.4A4A20 = 12 (Seconds)

(**) Out 4 … on Display led °4 must be switched on, otherwise change the io4.F parameter value from "on" to "out4", confirm the value, quit the configuration mode then change again the io4.F parameter value from "out4" to "on".

(***) Factory settings. These values must be adapted to machine conditions

N.B. For pressure probe, SP, SPHL, SPLL parameters values are expressed in Kpa (1 bar = 100 Kpa).

CONFIGURATION

How to access configuration level

The configuration parameters are collected in various groups. Every group defines all parameters related with a specific function (e.g.: control, alarms, output functions).

1. Push the button for more than 5 seconds. The upper display will show PASS while the lower display will show 0.
2. Using and buttons set the programmed password.
   According to the entered password, it is possible to see a part of the parameters listed in the "configuration parameters" section.
   a. Enter "**30**" as password to view all the configuration parameters
   b. Enter "**20**" as password to view the parameters of the "limited access level". At this point, only the parameters with attribute **Liv = A** or **Liv = O** will be editable.
   c. Leave the password blank to edit "user level" parameters, that are identified by attribute **Liv = O**
3. Push the button. If the password is correct the display will show the acronym of the first parameter group preceded by the symbol: . In other words the upper display will show: inP (group of the **Input parameters**).

The instrument is in configuration mode. To press for more than 5 seconds, the instrument will return to the "standard display.

Keyboard functions during parameter changing:

	Operator Mode
	When the upper display is showing a group and the lower display is blank, this key allows to enter in the selected group. When the upper display is showing a parameter and the lower display is showing its value, this key allows to store the selected value for the current parameter and access the next parameter within the same group.
	Allows to increase the value of the selected parameter.
	Allows to decrease the value of the selected parameter.
	Short presses allow you to exit the current group of parameters and select a new group. A long press terminates the configuration procedure (the instrument returns to the normal display).
+	These two keys allow to return to the previous group. Proceed as follows: Push the button and maintaining the pressure, then push the ; release both the buttons.

Configuration Parameters

inP GROUP - input confiuration					
Liv	**N°**	**Param**	**Description**	**Values**	**Default**
A	1	SEnS	Input type	Pt1 = RTD Pt100 Pt10 = RTD Pt1000 0.20 = 0..20mA 4.20 = 4..20mA Pressure probe 0.10 = 0..10V 2.10 = 2..10V crAL= Thermocouple K	Depends on the probe
A	2	dp	Decimal point position	0... 3	See page 7
A	3	SSc	Initial scale read-out for linear inputs (avaiable only if SEnS parameter is not equal to Pt1, Pt10, crAL values)	-1999... 9999	0
C	4	FSc	Full scale read-out for linear input inputs (avaiable only if SEnS parameter is not equal to Pt1, Pt10, crAL values)	-1999... 9999	Depends on the probe
C	5	unit	Unit of measure (present only in the case of temperature probe)	°C/°F	°C
C	6	Fil	Digital filter on the measured value	0 (= OFF)... 20.0 s	1.0
C	7	inE	Selection of the Sensor Out of Range type that will enable the safety output value	or = Over range ou = Under range our = over e under range	or

C	8	oPE	Safety output value	-100... 100	0
C	9	io4.F	I/O4 function selection	on = Out4 will be ever ON (used as a transmitter power supply) ,out4 = Uscita 4 (Used as digital output 4), dG2c = Digital input 2 for contact closure, dG2U = Digital input 2 driven by 12... 24 VDC	on
C	10	diF1	Digital input 1 function	oFF = Not used, 1 = Alarm reset, 2 = Alarm acknowledge (ACK), 3 = Hold of the measured value, 4 = Stand by mode, 5 = Manual mode, 6 = HEAt with SP1 and CooL with SP2, 7 = Timer RUN/Hold/Reset, 8 = Timer Run, 9 = Timer Reset, 10 = Timer Run/Hold, 11 = Timer Run/Reset, 12 = Timer Run/Reset with lock, 13 = Program Start, 14 = Program Reset, 15 = Program Hold, 16 = Program Run/Hold, 17 = Program Run/Reset, 18 = Sequential SP selection, 19 = SP1 - SP2 selection, 20 = SP1... SP4 binary selection, 21 = Digital inputs in parallel	19
C	12	di.A	Digital Inputs Action (DI2 only if configured)	0 = DI1 direct action, DI2 direct action 1 = DI1 reverse action, DI2 direct action 2 = DI1 direct action, DI2 reverse action 3 = DI1 reverse action, DI2 reverse action	0

Out GROUP- Output parameters

Liv	N°	Param	Description	Values	Default
C	14	o1F	Out 1 function	AL = Alarm output	AL
C	15	o1AL	Initial scale value of the analog retransmission	-1999 ... Ao1H	1
C	18	o1Ac	Out 1 action	dir = Direct action rEU = Reverse action dir.r = Direct with reversed LED ReU.r = Reverse with reversed LED	rEUr.r
C	19	o2F	Out 2 function	H.rEG = Heating output	H.rEG
C	21	o2Ac	Out 2 action	dir = Direct action rEU = Reverse action dir.r = Direct with reversed LED ReU.r = Reverse with reversed LED	dir
C	22	o3F	Out 3 function	H.rEG = Heating output	H.rEG
C	24	o3Ac	Out 3 action	dir = Direct action rEU = Reverse action dir.r = Direct with reversed LED ReU.r = Reverse with reversed LED	dir

AL1 GROUP - Alarm 1 parameters

Liv	N°	Param	Descrizione	Values	Default
C	28	AL1t	Tipo allarme AL1	nonE = Alarm not used LoAb = Absolute low alarm HiAb = Absolute high alarm LHAo = Windows alarm in alarm outside the windows LHAI = Windows alarm in alarm inside the	HidE

				windows SE.br = Sensor Break LodE = Deviation low alarm (relative) HidE = Deviation high alarm (relative) LHdo = Relative band alarm in alarm out of the band LHdi = Relative band alarm in alarm inside the band	
C	29	Ab1	Alarm 1 function	0... 15 +1 = Not active at power up +2 = Latched alarm (manual reset) +4 = Acknowledgeable alarm +8 = Relative alarm not active at set point change	0
C	30	AL1L	-- For High and low alarms, it is the low limit of the AL1 threshold; -- For band alarm, it is low alarm threshold	-1999... AL1H (E.U.)	-199.9
C	31	AL1H	-- For High and low alarms, it is the high limit of the AL1 threshold; -- For band alarm, it is high alarm threshold	AL1L... 9999 (E.U.)	999.9
O	32	AL1	AL1 threshold	AL1L... AL1H (E.U.)	See page 7
O	33	HAL1	AL1 hysteresis	1... 9999 (E.U.)	See page 7
C	34	AL1d	AL1 delay	0 (oFF)... 9999 (s)	oFF
C	35	AL1o	Alarm 1 enabling during Stand-by mode and out of range conditions	0 = Alarm 1 disabled during Stand by and out of range 1 = Alarm 1 enabled in stand by mode 2 = Alarm 1 enabled in out of range condition 3 = Alarm 1 enabled in stand by mode and in overrange condition	1

GRUPPO AL2 - parametri allarme 2

Liv	N°	Param	Description	Values	Default
C	36	AL2t	Alarm 2 type	nonE = Alarm not used LoAb = Absolute low alarm HiAb = Absolute high alarm LHAo = Windows alarm in alarm outside the windows LHAI = Windows alarm in alarm inside the windows SE.br = Sensor Break LodE = Deviation low alarm (relative) HidE = Deviation high alarm (relative) LHdo = Relative band alarm in alarm out of the band LHdi = Relative band alarm in alarm inside the band	SE.br
C	37	Ab2	Alarm 2 function	0... 15 +1 = Not active at power up +2 = Latched alarm (manual reset) +4 = Acknowledgeable alarm +8 = Relative alarm not active at set point change	0
C	42	AL2d	AL2 hysteresis	0 (oFF)... 9999 (s)	oFF
C	43	AL2o	Alarm 2 enabling during Stand-by mode and out of range conditions	0 = Alarm 2 disabled during Stand by and out of range 1 = Alarm 2 enabled in stand by mode 2 = Alarm 2 enabled in out of range condition 3 = Alarm 2 enabled in stand by mode and in overrange condition	0

AL3 Group - alarm 3 parameters					
Liv	**N°**	**Param**	**Description**	**Values**	**Default**
	44	AL3t	Alarm 3 type	nonE = Alarm not used LoAb = Absolute low alarm HiAb = Absolute high alarm LHAo = Windows alarm in alarm outside the windows LHAI = Windows alarm in alarm inside the windows SE.br = Sensor Break LodE = Deviation low alarm (relative) HidE = Deviation high alarm (relative) LHdo = Relative band alarm in alarm out of the band LHdi = Relative band alarm in alarm inside the band	nonE

LbA Group - Loop break alarm					
Liv	**N°**	**Param**	**Descrizione**	**Values**	**Default**
C	52	LbAt	LBA time	Da 0 (oFF) a 9999 (s)	oFF

rEG Group - Control parameters					
Liv	**N°**	**Param**	**Description**	**Values**	**Default**
C	56	cont	Control type	Pid = PID (heat and/or) On.FA = ON/OFF asymmetric hysteresis On.FS = ON/OFF symmetric hysteresis nr = Heat/Cool ON/OFF control with neutral zone 3Pt = Servomotor control (available only when Output 2 and Output 3 have been ordered as “M”)	3pt
C	57	Auto	Autotuning selection	-4 = Oscillating auto-tune with automaticrestart at power up and after all point change -3 = Oscillating auto-tune with manual start -2 = Oscillating -tune with auto-matic start at the first power up only -1 = Oscillating auto-tune with auto-matic restart at every power up 0 = Not used 1 = Fast auto tuning with automatic restart at every power up 2 = Fast auto-tune with automatic start the first power up only 3 = FAST auto-tune with manual start 4 = FAST auto-tune with automatic restart at power up and after set point change 5 = Evo-tune with automatic restart at every power up 6 = Evo-tune with automatic start the first power up only 7 = Evo-tune with manual start 8 = Evo-tune with automatic restart at power up and after a set point change	7
C	58	tunE	Manual start of the Autotuning	oFF = Not active on = Active	oFF

C	59	SELF	Self tuning enabling	no = The instrument does not perform the self-tuning YES = The instrument is performing the self-tuning	No
A	62	Pb	Proportional band	1... 9999 (E.U.)	See page 7
A	63	ti	Integral time	0 (oFF) ... 9999 (s)	See page 7
A	64	td	Derivative time	0 (oFF) ... 9999 (s)	See page 7
C	65	Fuoc	Fuzzy overshoot control	0.00... 2.00	1
C	69	rS	Manual reset (Integral pre-load)	-100.0... +100.0 (%)	0.0
A	70	Str.t	Servomotor stroke time	5...1000 seconds	See page 7
A	71	db.S	Servomotor dead band	0...100%	5
C	72	od	Delay at power up	0.00 (oFF) ... 99.59 (hh.mm)	oFF

SP Group - Set point parameters

Liv	N°	Param	Description	Values	Default
C	76	nSP	Number of used set points	1... 4	2
A	77	SPLL	Minimum set point value	-1999 ... SPHL	See page 7
A	78	SPHL	Maximum set point value	SPLL ... 9999	See page 7
O	79	SP	Set point 1	SPLL ... SPLH	See page 7
C	80	SP 2	Set point 2	SPLL ... SPLH	60
	83	A.SP	Selection of the active set point	"SP" ... " nSP"	SP
C	84	SP.rt	Remote set point type	RSP = The value coming from serial link is used as remote set point trin = The value will be added to the local set point selected by A.SP and the sum becomes the operative set point PErc = The value will be scaled on the input range and this value will be used as remote SP	trin
C	85	SPLr	Local/remote set point selection	Loc = Local rEn = Remote	Loc
C	86	SP.u	Rate of rise for POSITIVE set point change (ramp UP)	0.01... 99.99 (inF) Eng. units per minute	inF
C	87	SP.d	Rate of rise for NEGATIVE set point change (ramp DOWN)	0.01... 99.99 (inF) Eng. units per minute	inF

PAn Group - Operator HMI

Liv	N°	Param	Description	Values	Default
C	118	PAS2	Level 2 password (limited access level)	oFF (Level 2 not protected by password) 1... 200	20
C	119	PAS3	Level 3 password (complete configuration level)	3... 300	30
C	120	PAS4	Password livello (livello configurazione a codice)	201... 400	300
C	121	uSrb	button function during RUN TIME	nonE = No function tunE = Auto-tune/self-tune enabling. A single press (longer than 1 second) starts the auto-tune oPLo = Manual mode. The first pressure puts the instrument in manual mode (OPLO) while a second one puts the instrument in Auto mode	tunE

				AAc = Alarm reset ASi = Alarm acknowledge chSP = Sequential set point selection St.by = Stand by mode. The first press puts the instrument in stand by mode while a second one puts the instrument in Auto mode. Str.t = Timer run/hold/reset P.run = Program run P.rES = Program reset P.r.H.r = Program run/hold/reset	
C	122	diSP	Display management	Spo = Operative set point	SPo
C	123	di.cL	Display colour	0 = The display colour is used to show the actual deviation (PV - SP) 1 = Display red (fix) 2 = Display green (fix) 3 = Display orange (fix)	2
	125	diS.t	Display Timeout	-- oFF (display always ON) -- 0.1... 99.59 (mm.ss)	oFF
C	126	fiLd	Filter on the displayed value	-- oFF (filter disabled) -- From 0.0 (oFF) to 20.0 (E.U.)	oFF
C	128	dSPu	Instrument status at power ON	AS.Pr = Starts in the same way it was prior to the power down Auto = Starts in Auto mode oP.0 = Starts in manual mode with a power output equal to zero St.bY = Starts in stand-by mode	Auto
C	129	oPr.E	Operative modes enabling	ALL = All modes will be selectable by the next parameter Au.oP = Auto and manual (OPLO) mode only will be selectable by the next parameter Au.Sb = Auto and Stand-by modes only will be selectable by the next parameter	ALL
C	130	oPEr	Operative mode selection	If oPr.E = ALL: - Auto = Auto mode - oPLo = Manual mode - St.bY = Stand by mode If oPr.E = Au.oP: - Auto = Auto mode - oPLo = Manual mode If oPr.E = Au.Sb: - Auto = Auto mode - St.bY = Stand by mode	Auto

SEr Group - Serial link parameter

Liv	N°	Param	Description	Values	Default
C	131	Add	Instrument address	-- oFF -- 1... 254	1
C	132	bAud	baud rate	1200 = 1200 baud 2400 = 2400 baud 9600 = 9600 baud 19.2 = 19200 baud 38.4 = 38400 baud	9600
C	133	trSP	Selection of the value to be retransmitted (Master)	nonE = Retransmission not used (the instrument is a slave) rSP = The instrument becomes a Master and retransmits the operative set point PErc = The instrument become a Master and it retransmits the power output	nonE

con Group - Consumption parameters					
Liv	**N°**	**Param**	**Description**	**Values**	**Default**
C	134	Co.tY	Count type	oFF = Not used 1 = Instantaneous power (kW) 2 = Power consumption (kW/h) 3 = Energy used during program execution. This measure starts from zero when a program runs end stops at the end of the program. A new program execution will reset the value 4 = Total worked days: number of hours the instrument is turned ON divided by 24. 5 = Total worked hours: number of hours the instrument is turned ON. 6 = Total worked days with threshold: number of hours the instrument is turned ON divided by 24, the controller is forced in stand-by when Co.ty value reaches the threshold set in [137] h.Job. 7 = Total worked hours with threshold: number of hours the instrument is turned ON, the controller is forced in stand-by when Co.ty value reaches the threshold set in [137] h.Job. 8 = Totalizer of control relay worked days: number of hours the control relay has been in ON condition, divided by 24. 9 = Totalizer of control relay worked hours: number of hours the control relay has been in ON condition. 10 = Totalizer of control relay worked days with threshold: number of hours the control relay has been in ON condition divided by 24, the controller is forced in stand-by when Co.ty value reaches the threshold set in [137] h.Job. 11 = Totalizer of control relay worked hours with threshold: number of hours the control relay has been in ON condition, the controller is forced in stand-by when Co.ty value reaches the threshold set in [137] h.Job.	oFF
C	138	t.Job	Worked time (not resettable)	0... 9999 days	0

cAL Group - User calibration group					
Liv	**N°**	**Param**	**Description**	**Values**	**Default**
C	139	AL.P	Adjust Low Point	From -1999 to (AH.P - 10) in engineering units	0
C	140	AL.o	Adjust Low Offset	-300... +300 (E.U.)	0
C	141	AH.P	Adjust High Point	From (AL.P + 10) to 9999 engineering units	999.9
C	142	AH.o	Adjust High Offset	-300... +300	0

OPERATIVE MODES

When the instrument is powered, it starts immediately to work according to the parameters values loaded in its memory. The instrument behaviour and its performance are governed by the value of the stored parameters.

At power ON the instrument can start in one of the following mode depending on its configuration:

Automatic Mode In Automatic mode the instrument drives automatically the control output according to the parameter value set and the set point/measured value.

Manual Mode (OPLO): In Manual mode the the upper display shows the measured value while the lower display shows the power output The lower display shows the power output [preceded by H (for heating) or C (for cooling)], MAN is lit and the instrument allows you to set manually the control output power. No Automatic action will be made.

Stand by Mode (St.bY): In stand-by mode the instrument operates as an indicator. It will show on the upper display the measured value and on the lower display the set point alternately to the “St.bY” messages and forces the control outputs to zero.

We define all the above described conditions as “Standard Display”.

As we have seen, it is always possible to modify the value assigned to a parameter independently from the operative modes selected.

AUTOMATIC MODE

Keyboard function when the instrument is in Auto mode:

	Modo Operatore
	Allows entry into parameter modification procedures
	Allows you to start the “Direct set point modification” function (see below).
	Allows you to display the “additional informations” (see below).
	Performs the action programmed by [121] uSrb (button function during RUN TIME) parameter

Additional information
This instrument is able to show you some additional informations that can help you to manage your system.
The additional informations are related to how the instrument is programmed, hence in many cases, only part of this information is available.

1. When the instrument is showing the “standard display” push button. The lower display will show H or c followed by a number. This value is the current power output applied to the process. The H show you that the action is a Heating action while the "c" show you that the action is a Cooling action
2. Push button again. When the programmer is running the lower display will show the segment currently performed and the Event status as shown below:
   r 1.00 where the first character can be r for a ramp or S for a soak, the next digit show the number of the segment (e.g. S3 means Soak number 3) and the twoless significant digits (LSD) show you the status of the two event (the LSD is the Event 2)..
3. Push button again. When the programmer is running the lower display will show the theoretical remaining time to the end of the program preceded by a "P" letter:
   P84.3
4. Push button again. When the wattmeter function is running the lower display will show U followed by the measured energy..
5. Push button. When the “Worked time count” is running the lower display will show "d" for days or "h" for hours followed by the measured time.
6. Push button. The instrument returns to the "standard display".

Note: The additional information visualization is subject to a time out. If no button is pressed for more than 10 second the instrument comes automatically back to the Standard display..

Direct set point modification
This function allows to modify rapidly the set point value selected by [83] A.SP (selection of the active Set point) or to the set point of the segment group (of the programmer) currently in progress.

1. Push button. The upper display shows the acronym of the selected set point (e.g. SP2) and the lower display will show its value.
2. By and buttons, assign to this parameter the desired value
3. Do not push any button for more than 5 second or push the button. In both cases the instrument memorize the new value and come back to the “standard display”.

Manual mode

This operative mode allows you to deactivate automatic control and manually program the percentage power output to the process. When the instrument is in manual mode, the upper display shows the measured value while the lower display shows the power output [preceded by H (for heating action) or C (for cooling action)] The MAN LED is lit. When manual control is selected, the instrument will start to operate with the same power output as the last one supplied by automatic mode and can be modified using the and buttons.

In case of ON/OFF control, 0% corresponds to the deactivated output while any value different from 0 corresponds to the activated output. As in the case of visualization, the programmable values range from H100 (100% output power with reverse action) to C100 (100% output power with direct action).

Notes:

- During manual mode, the alarms are operative.
- If you set manual modes during program execution, the program will be frozen and it will restart when the instrument will come back to Auto mode.
- If you set manual modes during self-tune execution, the self- tune function will be aborted.
- During manual mode, all functions not related with the control (wattmeter, independent timer, “worked time”, etc) continue to operate normally..

STAND-BY MODE

This operative mode also deactivates the automatic control but forces the control output to zero. In this mode the instrument operates as an indicator. When the instrument is in stand by mode the upper display will show the measured value while the lower display will show alternately the set point and the message “St.bY”.

Notes:

- During stand by mode, the relative alarms are disabled while the absolute alarms are operative or not according to the ALxo (Alarm x enabling during Stand-by mode) parameter setting.
- If you set stand by mode during program execution, the program will be aborted.
- If you set stand by mode during self-tune execution, the self- tune function will be aborted.
- During stand by mode, all functions not related with the control (wattmeter, independent timer, “worked time”, etc) continue to operate normally.
- When the instrument is swapped from stand by to auto modes, the instrument will start automatically the alarm masking, the soft start functions and the auto-tune (if programmed).

AUTOTUNE (EVOTUNE)

Evotune is a fast and fully automatic procedure that can be started in any condition, regardless the deviation from SP. The controller selects automatically the best tune method and computes the optimum PID parameters. To activate Evotune press button for 3 seconds.

ERROR MESSAGES

The upper display shows the OVER-RANGE and UNDERRANGE conditions with the following indications:

Over-range: OOOO

Under-range U.U.U.U.

The sensor break will be signalled as an out of range: - - - -

Note: When an over-range or an under-range is detected, the alarms operate as in presence of the maximum or the minimum measurable value respectively.

To check the out of span Error condition, proceed as follows:

1. Check the input signal source and the connecting line.
2. Make sure that the input signal is in accordance with the instrument configuration. Otherwise, modify the input configuration.
3. If no error is detected, send the instrument to your supplier to be checked.

List of possible errors

ErAT Fast Auto-tune cannot start. The measure value is tooclose to the set point. Push the button in order to delete the error message.

ouLd Overload on the out 4. The messages shows that a short circuit is present on the Out 4 when it is used as output or as a transmitter power suply. When the short circuit disappears the output restart to operate..

NoAt Auto-tune not finished within 12 hours.

ErEP Possible problem of the instrument memory. The messages disappears automatically. When the error continues, send the instrument to your supplier.

RonE Possible problem of the firmware memory. When this error is detected, send the instrument to your supplier.

Errt Possible problem of the calibration memory. When this error is detected, send the instrument to your supplier.

FACTORY RESET

Sometime, e.g. when you re-configure an instrument previously used for other works or from other people or when you have made too many errors during configuration and you decided to re-configure the instrument, it is possible to restore the factory configuration. This action allows to put the instrument in a defined condition (the same it was at the first power ON).

The default data are those typical values loaded in the instrument prior to ship it from factory. To load the factory default parameter set, proceed as follows:

1. Press the button for more than 5 seconds. The upper display will show PASS while the lower display shows 0;
2. Using and buttons set the value -481;
3. Push button;
4. The instrument will turn OFF all LEDs for a few seconds, then the upper display will show dFLt (default) and then all LEDs are turned ON for 2 seconds. At this point the instrument restarts as for a new power ON.

The procedure is complete.

Note: The complete list of the default parameters is available in Chapter "Configuration".

RWF55.5X & RWF55.6X

User manual

M12926CA Rel.0.2 11/2023

DEVICE INSTALLATION

Fixing system

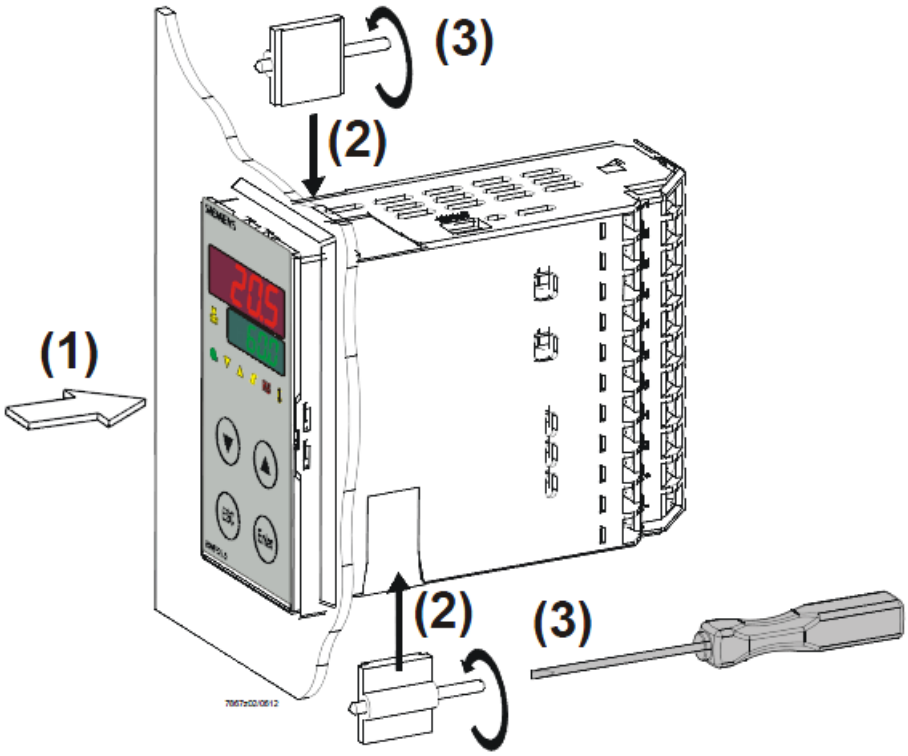

Drilling dimensions:

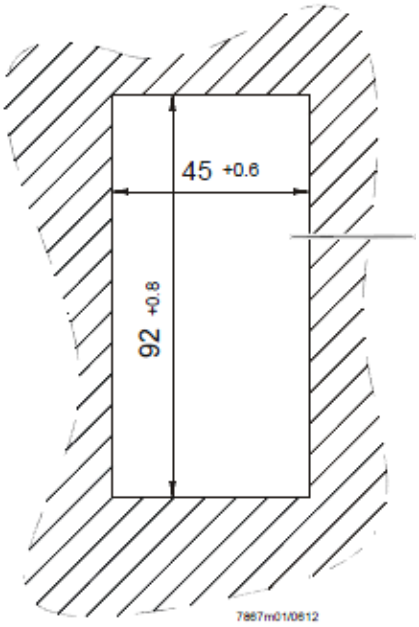

FRONT PANEL

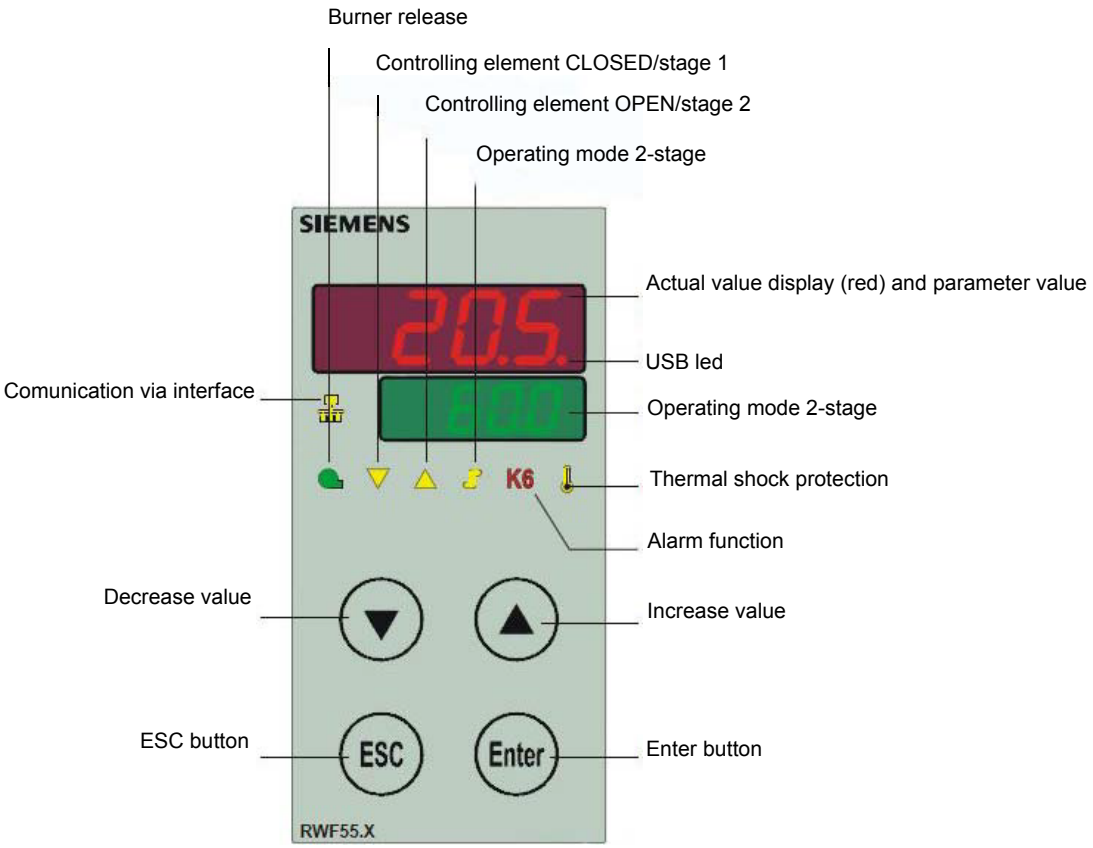
Burner release
Controlling element CLOSED/stage 1
Controlling element OPEN/stage 2
Operating mode 2-stage
SIEMENS
Actual value display (red) and parameter value
USB led
Comunication via interface
Operating mode 2-stage
K6
Thermal shock protection
Alarm function
Decrease value
Increase value
ESC button
ESC
Enter
Enter button
RWF55.X

NAVIGATION MENU

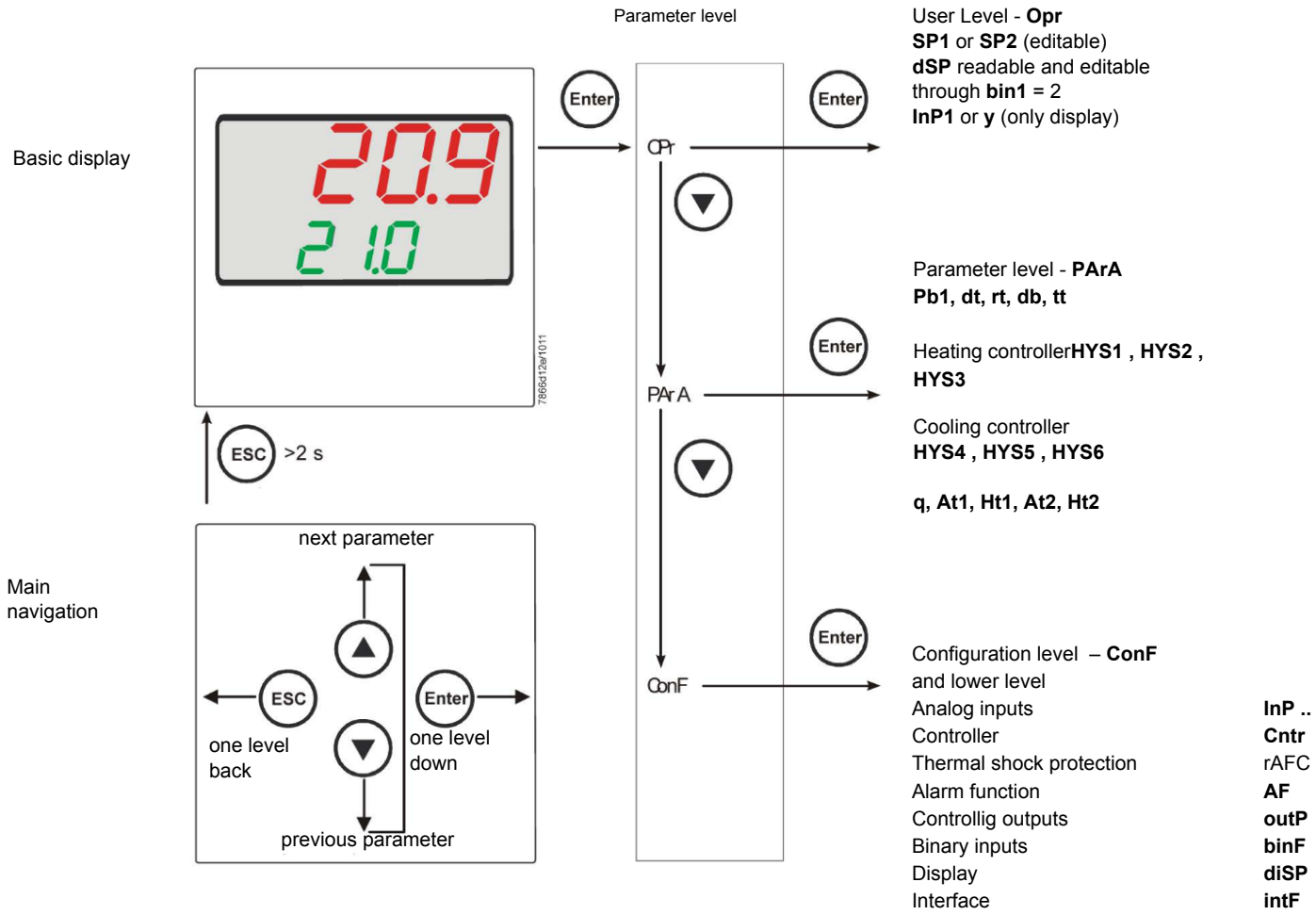

RWF55 is preset good for 90% of applications. However, you can set or edit parameters as follow:

Set-point: set or modification:

When the burner is in stand-by, (safety loop open, that is terminals 3-4/T1-T2 on the 7 pole plug open) push the Enter button: on the lower display (green) Opr appears; push Enter again and in the same display SP1 appears. Push Enter again and the lower display (green SP1) flashes. Using the up and down arrows change the set-point on the upper display (red).Push Enter to confirm and push ESC more times to get the home position.

PID parameters set and modifications (PArA):

Push **Enter** button, on the green display **Opr** appears; using the **down arrow,** scroll until group **PArA** is reached and push **Enter**.
On the green display **Pb1** e appears and on the red one the set parameter. Push is sequence the **down or up** arrow the menu is scrolled.
Push **Enter** to select and the **arrows** to choose the desired value. **Enter** to confirm

Parameter	Display	Range	Factory setting	Remarks
Proportional band	Pb1	1… 9999 digit	10	Typical value for temperature
erivative action	dt	0… 9999 sec.	80	Typical value for temperature
Integral action	rt	0… 9999 sec.	350	Typical value for temperatureT
Dead band (*)	db	0… 999,9 digit	1	Typical value
Servocontrol running time	tt	10… 3000 sec.	15	Set servocontrol running time
Switch-on differential (*)	HYS1	0,0… -1999 digit	-5	Value under setpoint below which the burner switches back on (1N-1P closes)
Switch-off differential 2° stage (*)	HYS2	0,0 … HYS3	3	(enable only with parameter bin1 = 4)
Upper switch-off differential (*)	HYS3	0,0… 9999 digit	5	Value over setpoint above which the burner switches off (1N-1P opens)
Switch-on differential on cooling controller (*)	HYS4	0,0… 9999 digit	5	Do not used (enable only with parameter **CACt** = 0)
Switch-off differential 2° stage on cooling controller (*)	HYS5	HYS6…0,0 digit	5	Do not used (enable only with parameter **CACt** = 0 and parameter **bin1**=0)
Upper switch-off differential on cooling controller (*)	HYS6	0,0… -1999 digit	5	Do not used (enable only with parameter CACt = 0)
Delay modulation	q	0,0… 999,9 digit	0	Do not alter
T Outside temperature Curve point 1 (*)	At1	-40 ...120 digit	-10	First point of external temperature for climatic curve
Boiler temperature Curve point 1 (*)	Ht1	SPL...SPH	60	Set-point temperature for the external temperature 1
TT Outside temperature Curve point 2 (*)	At2	-40 ...120 digit	20	Second point of external temperature for climatic curve
Boiler temperature Curve point 2 (*)	Ht2	SPL...SPH	50	Set-point temperature for the external temperature 2

(*) Parameters affected by setting of decimal place (**ConF > dISP** parameter **dECP**)

Setting the kind of sensor to be connected to the device:

Push the **Enter** button: on the lower display (green) **Opr** appears. Using the **up and down arrows** find **ConF.** Push **Enter** to confirm. Now on the green display the group **InP** appears. Push **Enter** and **InP1** is displaied. Enter to confirm.You are inside **InP1**; the green display shows **Sen1 (sensor type)**, while the red display shows the chosen sensor code Push **Enter** to enter the **Sen1** parameter, then choose the desired sensor using the **arrows.** Push **Enter** to confirm and **ESC** to escape.

Once selected the sensor, you can modify all the other parameters using **up and down arrows** according to the tables here below :

ConF > InP >InP1

Parameter	Value	Description
SEn1 type of sensor for analog input 1	1	Pt100 3 wire
	2	Pt100 2 wire
	3	Pt1000 3 wire
	4	Pt1000 2 wire
	5	Ni1000 3 wire
	6	Ni1000 2 wire
	7	0 ÷ 135 ohm
	8	Cu-CuNi T
	9	Fe-CuNi J
	10	NiCr-Ni K
	11	NiCrSi-NiSi N
	12	Pt10Rh-Pt S
	13	Pt13Rh-Pt R
	14	Pt30Rh-Pt6Rh B
	15	0 ÷ 20mA
	16	4 ÷ 20mA
	17	0 ÷ 10V
	18	0 ÷ 5V
	19	1 ÷ 5V
OFF1 Sensor offset	-1999..**0**.. +9999	Correction value measured by the sensor
SCL1 scale low level	-1999..**0**.. +9999	minimum scale value(for input ohm, mA, V)
SCH1 scale high level	-1999..**100**.. +9999	maximum scale value(for input ohm, mA, V)
dF1 digital filter	0…**0,6**…100	Is used to adapt the digital 2nd order input filter (time in s; 0 s = filter off)
Unit temperature unit	**1** 2	1 = **degrees** Celsius 2 = degrees Fahrenheit

(**bold** = factory settings)

ConF > InP >InP2

Input 2 : this input can be used to specify an external setpoint or carry out setpoint shifting

Parameter	Value	Description
FnC2	0 1 2 3	0= **no function** 1= external setpoint (display **SPE**) 2 =setpoint shifting (display **dSP**) 3 = angular positioning feedback
SEn2 tisensor type input 2	1	0 ÷ 20mA
	2	4 ÷ 20mA
	3	0 ÷ 10V
	4	0 ÷ 5V
	5	1 ÷ 5V
	1	0 ÷ 20mA
OFF2 Sensor offset	-1999..**0**.. +9999	Correction value measured by the sensor
SCL2 scale low level	-1999..**0**.. +9999	minimum scale value(for input ohm, mA, V)
SCH2 scale high level	-1999..**100**.. +9999	maximum scale value(for input ohm, mA, V)
dF2 digital filter	0…**2**…100	Is used to adapt the digital 2nd order input filter (time in s; 0 s = filter off)

(**bold** = factory settings)

ConF > InP >InP3

Input 3: this input is used to acquire the outside temperature

Parameter	Value	Description
SEn3 sensor type input 3sensor type input 2	0	0 =
	1	1 = wire
	2	2 = wire
OFF3 Sensor offset	-1999..**0**.. +9999	Correction value measured by the sensor
dF3 digital filter	0…**1278**…1500	Is used to adapt the digital 2nd order input filter (time in s; 0 s = filter off)

(**bold** = factory settings)

ConF > Cntr

Here, the type of controller, operating action, setpoint limits and presettings for self-optimization are selected

Parameter	Value	Description
CtYP controller type	1 2	**1 = 3-position controller (open-stop-close)** 2 = continuative action controller (0 ÷10V or 4 ÷ 20mA)
CACt control action	**1** 0	1 = **heating controller** 0 = cooling controller
SPL least value of the set-point range	-1999..**0**..+9999	minimum set-point scale
SPH maximum value of the set-point range	-1999..**100**..+999	maximum set-point scale
Self-optimization	0 1	0 = **Free** 1 = Locked Self-optimization can only be disabled or enabled via the ACS411 setup program. Self-optimization is also disabled when the parameter level is locked
oLLo set-point limitation start, operation limit low	**-1999**.... +9999	lower working range limit
oLHi set-point limitation end, operation limit high	-1999.... **+9999**	upper working range limit

(**bold** = factory settings)

ConF > rAFC

Activation boiler shock termic protetion:

RWF55.. can activate the thermal shock protection only on sites where the set-point is lower than 250°C and according to **rAL** parameter

Parameter	Value	Description
FnCT type of contol	**0** 1 2	tchoose type of range degrees/time **0 = deactived** 1 = Kelvin degrees/minute 2 = Kelvin degrees/hour
rASL ramp rate	**0,0 …** 999,9	Slope of thermal shock protection (only with functions 1 and 2) .
toLP tolerance band ramp	**2 x (HYS1) = 10**…9999	width of tolerance band (in K) about the set-point **0 = tolerance band inactive** 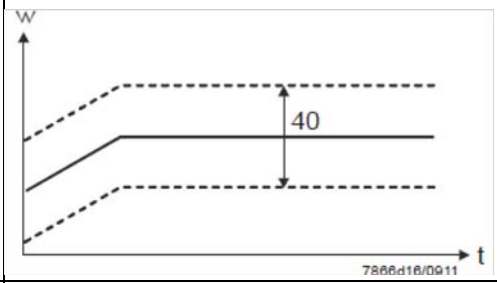
rAL ramp limit	**0**…250	Ramp limit. When this value is lower than the temperature set-point, the RWF controls the output increasing the temp set point step by step according to **rASL**. If this is over the temp set point, the control is performed in cooling

(**bold** = factory settings)

Alarm functionAF

The alarm function can be used to monitor the analog inputs. If the limit value is exceeded, multifunctional relay K6 (terminals **6N** and **6P**) is activated (depending on the switching characteristic)

The alarm function can have different switching functions (Ik1 to Ik8) and can be set to a deviation from the active setpoint or to a fixed limit value

Limit value **AL** relative to setpoint (x)

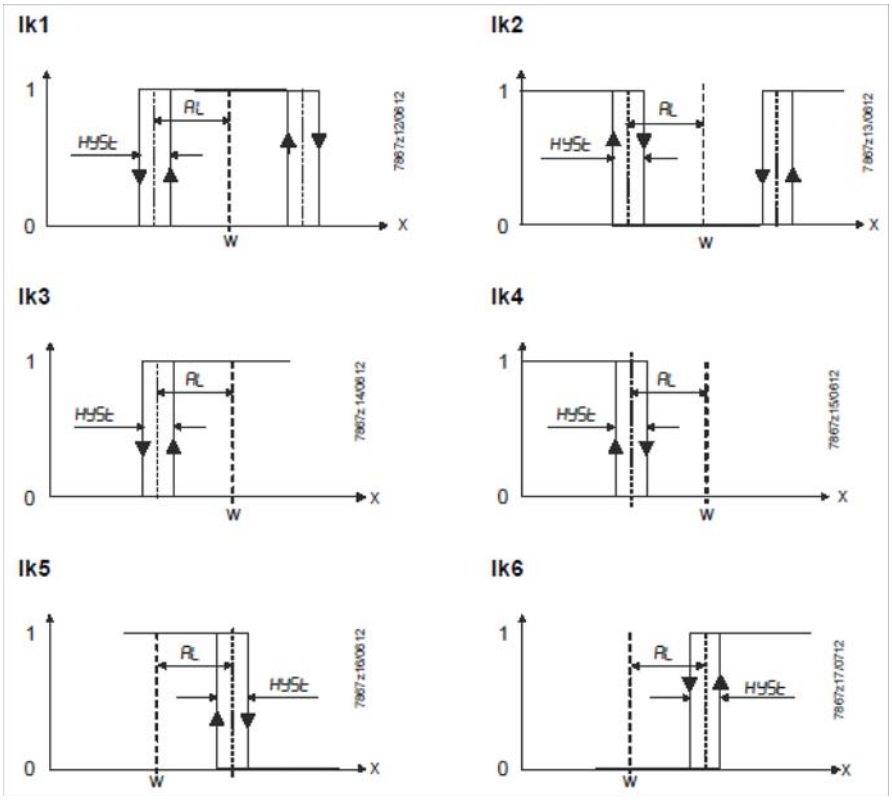

Fixed limit value **AL**

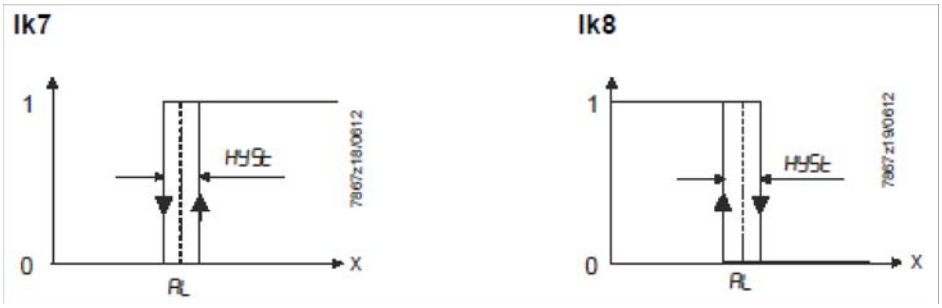

ConF > AF

Parameter	Value	Description
FnCt type of control	0 1 2 3 4 5 6 7 8 9 10 11 12	0 = **Without function** Ik1 = monitored input **InP1** Ik2 = monitored input **InP1** Ik3 = monitored input **InP1** Ik4 = monitored input **InP1** Ik5 = monitored input **InP1** Ik6 = monitored input **InP1** Ik7 = monitored input **InP1** Ik8 = monitored input **InP1** Ik7 = monitored input **InP2** Ik8 = monitored input **InP2** Ik7 = monitored input **InP3** Ik8 = monitored input **InP3**
Alarm value AL	-1999 ... **0** 1999	Limit value or deviation from setpoint to be monitored (see alarm functions **Ik1** to **Ik8**: limit value **AL**) Limit value range for **Ik1** and **Ik2**0 ...9999
HySt switching differential	0… **1**... 9999	Switching differential for limit value **AL**
ACrA response by out of range	**0** 1	**Switched-off** ON Switching state in the case of measuring range overshoot or undershoot (Out of Range)

(**bold** = factory settings)

ConF > OutP

For fuel-air ratio control purposes, the RWF55 has the binary outputs K2, K3 (terminals KQ,K2, K3) and the analog output (terminals A+, A-). The burner is released via relay K1 (terminals 1N, 1P) .

The binary outputs of the RWF55 offer no setting choices

The RWF55 has an analog output.

The analog output offers the following setting choices:

Parameter	Value	Description
FnCt type of control	1 2 3 **4**	1 = analog input 1 doubling with possibility to convert 2 = analog input 2 doubling with possibility to convert 3 = analog input 3 doubling with possibility to convert **4 = Controller's angular positioning is delivered (modulating controller)**
SiGn type of output signal	 **0** 1 2	physical output signal (terminals A+, A-) **0 = 0÷20mA** 1 = 4÷20mA 2 = 0÷10V DC
rOut value when out of input range	**0**…101	signal (in percent) when measurement range is crossed
oPnt zero point	-1999…**0**..+9999	A value range of the output variable is assigned to a physical output signal (for **FnCt** = 1, 2, 3)
End end point	-1999…**100**..+9999	A value range of the output variable is assigned to a physical output signal (for **FnCt** = 1, 2, 3)

(**bold** = factory settings)

ConF > binF

This setting decides on the use of the binary inputs**D1**, **D2**, **DG**

b

Parameter	Value	Description
bin1 binary imput 1 (terminals **DG – D1**)	**0** 1 2 3	**0 = without function** 1 = set-point changeover (SP1 / SP2) 2 = Iset-point shift (Opr > dSP parameter = value of set-point modify) 3 = input alarm
bin2 binary imput 2 (terminalsк **DG – D2**)	**4**	**changeover of operating mode** DG-D2 open = modulating operation DG-D2 close = 2 stage operation

(**bold** = factory settings)

ConF > dISP

.Both displays can be customized to suit your needs by configuring the displayed value, decimal, time out and blocking

Parameter	Value	Description
diSU pper display (red)	0 **1** 2 3 4 6 7	Display value for upper display: 0 = display power-off **1 = analog input 1 (InP1) value** 2 = analog input 2 (InP2) value 3 = analog input 3 (InP3) value 4 = controller's angular positioning 6 = set-point valueв 7 = end value with thermal shock protection
diSL lower display (green)	0 1 2 3 4 **6** 7	Display value for lower display3: 0 = display power-off 1 = analog input 2 (InP2) value 2 = analog input 2 (InP2) value 3 = analog input 2 (InP2) value 4 = controller's angular positioning **6 =** set-point valueв 7 = end value with thermal shock protection
tout timeout	0..**180**..250	time (s) on completion of which the controller returns automatically to the basic display, if no button is pressed
dECP decimal point	**0** 1 2	**0 = no decimal place** 1 = one decimal place 2 = two decimal place
CodE level lockout	**0** 1 2 3	**0 = no lockout** 1 = configuration level lockout (**ConF**) 2 = parameter and configuration level lockout (**PArA** & **ConF**) 3 = keyboard lockout

(**bold** = factory settings)

ConF > IntF

The controller can be integrated into a data network using an optional RS-485 (terminals R+ and R-) interface or an optional Profibus DP interface(only model**RWF55.6x** terminalsC1-C2-C3-C4)

Parameter	Value	Description
bdrt baudrate	**0** 1 2 3	**0 = 4800 baud** 1 = 9600 baud 2 = 19200 baud 3 = 38400 baud
Adr Device address Modbus	0.. **1**.. 254	Address in the data network
dP Device address Profibus	0..**125**	only withRWF55.6x
dtt Remote detection time	0.. **30**.. 7200s	0 = swiched-off

(**bold** = factory settings)

Manual control :

In order to manual change the burner load, while firing keep pushing the **ESC** button for more than 5 s; on the lower green display **Hand** appears.

using the **UP** and **DOWN** arrows, the load varies.

Keep pushing the **ESC** button for getting the normal operation again.

NB: every time the device shuts the burner down (start led switched off - contact 1N-1P open), the manual control is not active.

Device self-setting (auto-tuning):

If the burner in the steady state does not respond properly to heat generator requests, you can activate the Device's self-setting function, which recalculates PID values for its operation, deciding which are most suitable for the specific kind of request

Follow the below instructions:

push the **UP** and **DOWN** arrows for more than 5 s; on the green lower display **tUnE** appears. Now the device pushes the burner to increase and decrease its output. During this time, the device calculates **PID** parameters (**Pb1**, **dt** and **rt**). After the calculations, the **tUnE** is automatically deactivated and the device has already stored them.

In order to stop the Auto-tuning function while it works, push again the **UP** and **DOWN** arrows for more than 5 s. The calculated **PID** parameters can be manually modified following the previously described instructions.

Display of software version :

The software version is shown by pushing Enter + UP arrow on the upper display.

Weather-compensated setpoint shifting(climatic regulation):

The RWF55 can be configured so that weather-compensated setpoint shifting is activated when an LG-Ni1000 outside sensor or a Pt1000 is connected (see parameter **InP3**).

To take into account the time response of a building, weather-compensated setpoint shifting uses the attenuated outside temperature rather than the current outside temperature

The minimum and maximum setpoints can be set using the lower setpoint limit **SPL** and the upper setpoint limit **SPH** of the menù **Crtr**.

The system also prevents the lower working range limit **oLLo** and upper working range limit **oLHi** from exceeding/dropping below the system temperature limits.

The heating curve describes the relationship between the boiler temperature setpoint and the outside temperature. It is defined by 2 curve points. For 2 outside temperatures, the user defines the boiler temperature setpoint that is required in each case. The heating curve for the weather-compensated setpoint is calculated on this basis. The effective boiler temperature setpoint is limited by the upper setpoint limit **SPH** and the lower setpoint limit **SPL**.

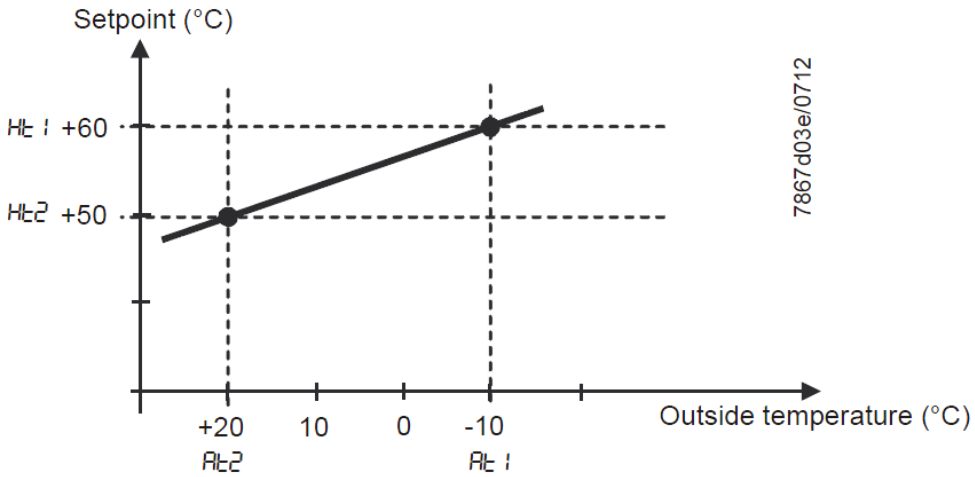

For setting climatic regulation function set:

PArA > parameters**At1, Ht1, At2, Ht2**

ConF > InP > InP3 parameters**SEn3, FnC3 = 1** (Weather-compensated setpoint).

Modbus interface

The tables that follow in this chapter specify the addresses of the readable and writable words that the customer is able to access. The customer may read and/or write the values using SCADA programs, PLCs, or similar.

The entries under Access have the following meanings:

R/O Read Only, value can only be read

R/W Read/Write, value can be read and written

The number of characters specified under Data type in the case of character strings includes the final \0.

Char10 means that the text is up to 9 characters long. The final \0 character is then added to this

User level

Address	**Access**	**Data type**	Signal reference	Parameter
0x0000	R/O	Float	X1	Analog input InP1
0x0002	R/O	Float	X2	Analog input InP2
0x0004	R/O	Float	X3	Analog input InP2
0x0006	R/O	Float	WR	Actual setpoint
0x0008	R/W	Float	SP1	Setpoint 1
0x000A	R/W	Float	SP2 (= dSP)	Setpoint 2
0x1035	R/O	Float	---	Analog input InP3 (unfiltered)
0x1043	R/O	Float	---	Actual angular positioning
0x1058	R/O	Word	B1	Burner alarm

Parameter level

Address	**Access**	**Data type**	Signal reference	Parameter
0x3000	R/W	Float	Pb1	Proportional range 1
0x3004	R/W	Float	dt	Derivative action time
0x3006	R/W	Float	rt	Integral action time
0x300C	R/W	Float	db	Dead band
0x3012	R/W	Word	tt	Controlling element running time
0x3016	R/W	Float	HYS1	Switch-on threshold
0x3018	R/W	Float	HYS2	Switch-off threshold down
0x301A	R/W	Float	HYS3	Switch-off threshold up
0x301C	R/W	Float	HYS4	Switch-on threshold (cooling)
0x301E	R/W	Float	HYS5	Switch-off threshold down (cooling)
0x3020	R/W	Float	HYS6	Switch-off threshold up (cooling)
0x3022	R/W	Float	**q**	Reaction threshold
0x3080	R/W	Float	At1	Outside temperature 1
0x3082	R/W	Float	Ht2	Boiler temperature 1
0x3084	R/W	Float	At2	Outside temperature 2
0x3086	R/W	Float	Ht2	Boiler temperature 2

Configuration level

Address	Access	Data type	Signal reference	Parameter
0x3426	R/W	Float	SCL1	Start of display input 1
0x3428	R/W	Float	SCH1	End of display input 1
0x3432	R/W	Float	SCL2	Start value input 2
0x3434	R/W	Float	SCH2	End value input 2
0x3486	R/W	Float	SPL	Start of setpoint limitation
0x3488	R/W	Float	SPH	End of setpoint limitation
0x342A	R/W	Float	OFFS1	Offset input E1
0x3436	R/W	Float	OFFS2	Offset input E2
0x343A	R/W	Float	OFFS3	Offset input E3
0x1063	R/W	Word	FnCt	Ramp function
0x1065	R/W	Float	rASL	Ramp slope
0x1067	R/W	Float	toLP	Tolerance band ramp
0x1069	R/W	Float	rAL	Limit value
0x1075	R/W	Float	dtt	Remote Detection Timer
0x1077	R/W	Float	dF1	Filter constant input 1
0x1079	R/W	Float	dF2	Filter constant input 2
0x107B	R/W	Float	dF3	Filter constant input 3
0x107D	R/O	Float	oLLo	Lower working range limit
0x107F	R/O	Float	oLHi	Upper working range limit
0x106D	R/W	Word	FnCt	Alarm relay function
0x106F	R/W	Float	AL	Alarm relay limit value (limit value alarm)
0x1071	R/W	Float	HYSt	Alarm relay hysteresis

Remote operation

Address	Access	Data type	Signal reference	Parameter
0x0500	R/W	Word	REM	Activation remote operation *
0x0501	R/W	Word	rOFF	Controller OFF in remote setpoint **
0x0502	R/W	Float	rHYS1	Switch-on threshold remote
0x0504	R/W	Float	rHYS2	Switch-off threshold down remote
0x0506	R/W	Float	rHYS3	Switch-off threshold up remote
0x0508	R/W	Float	SPr	Setpoint remote
0x050A	R/W	Word	RK1	Burner release remote operation
0x050B	R/W	Word	RK2	Relay K2 remote operation
0x050C	R/W	Word	RK3	Relay K3 remote operation
0x050D	R/W	Word	RK6	Relay K6 remote operation
0x050E	R/W	Word	rStEP	Step-by-step control remote operation
0x050F	R/W	Float	rY	Angular positioning output remote operation
0x0511	R/W	Float	rHYS4	Switch-on threshold remote (cooling)
0x0513	R/W	Float	rHYS5	Switch-off threshold down remote (cooling)
0x0515	R/W	Float	rHYS6	Switch-off threshold up remote (cooling)

Legend
* = Local
** = Controller OFF

Dati dell'apparecchio

Address	Access	Data type	Signal reference	Parameter
0x8000	R/O	Char12	---	Software version
0x8006	R/O	Char14	---	VdN number

Stato dell'apparecchio

Address	Access	Data type	Signal reference	Parameter
0x0200	R/O	Word	---	Outputs and states
			Bit 0	Output 1
			Bit 1	Output 3
			Bit 2	Output 2
			Bit 3	Output 4
			Bit 8	Hysteresis limitation
			Bit 9	Control system
			Bit 10	Self-optimization
			Bit 11	Second setpoint
			Bit 12	Measuring range overshoot InP1
			Bit 13	Measuring range overshoot InP2
			Bit 14	Measuring range overshoot InP3
			Bit 15	Calibration mode
0x0201	R/O	Word	---	Binary signals and hardware detection
			Bit 0	Operation mode 2-stage
			Bit 1	Manual mode
			Bit 2	Binary input D1
			Bit 3	Binary input D2
			Bit 4	Thermostat function
			Bit 5	First controller output
			Bit 6	Second controller output
			Bit 7	Alarm relay
			Bit 13	Analog output available
			Bit 14	Interface available

Electric connections :

With 7 pins connector version

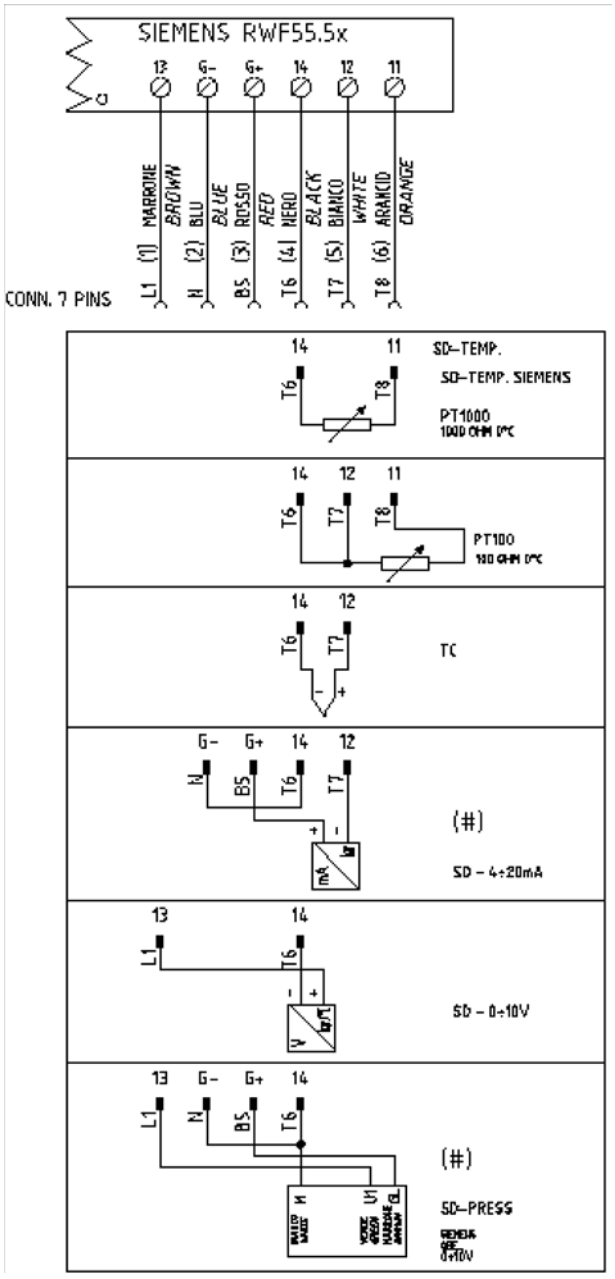

With terminals version

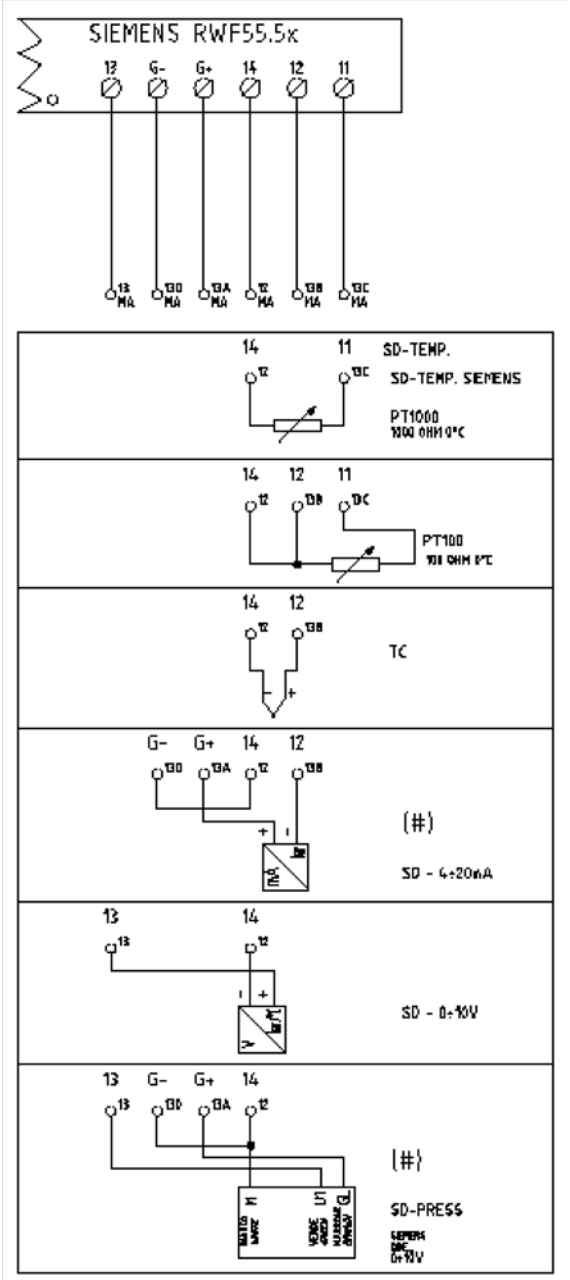

Corrispondences bornes entre RWF55.5x y RWF40.0x0Matches terminals betweenRWF55.5x and RWF40.0x0

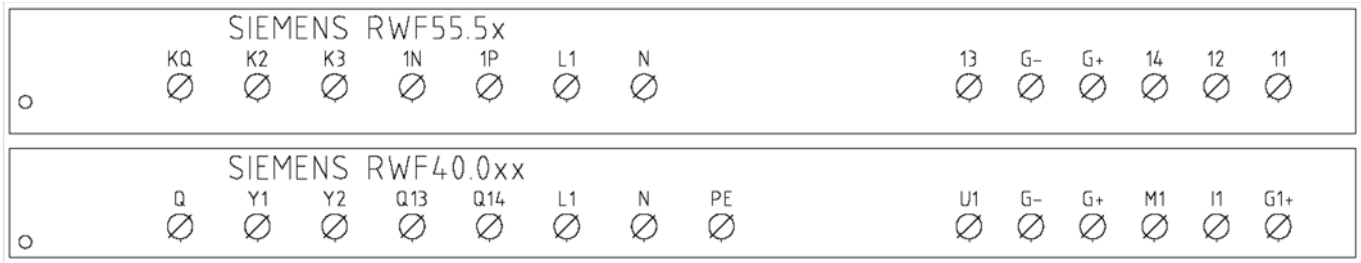

Parameters summarising for RWF55.xx :

Navigation menù	ConF					ConF									
	Inp														
	Inp1					Cntr		diSP	PArA						Opr
Types of probe	SEn1	OFF1	SCL	SCH	Unit	SPL	SPH	dECP	Pb. 1	dt	rt	tt	HYS1 (*)	HYS3 (*)	SP1 (*)
Siemens QAE2120…	6	0	needless	needless	1	30	95	1	10	80	350	(#)	-5	5	80 °C
Siemens QAM2120..	6	0	needless	needless	1	0	80	1	10	80	350	(#)	-2,5	2,5	40°C
Pt1000 (130°C max.)	4	0	needless	needless	1	30	95	1	10	80	350	(#)	-5	5	80°C
Pt1000 (350°C max.)	4	0	needless	needless	1	0	350	1	10	80	350	(#)	-5	10	80°C
Pt100 (130°C max.)	1	0	needless	needless	1	0	95	1	10	80	350	(#)	-5	5	80°C
Pt100 (350°C max)	1	0	needless	needless	1	0	350	1	10	80	350	(#)	-5	10	80°C
Probe4÷20mA / 0÷1,6bar	16	0	0	160	needless	0	160	0	5	20	80	(#)	0	20	100 kPa
Probe4÷20mA / 0÷3bar	16	0	0	300	needless	0	300	0	5	20	80	(#)	0	20	200 kPa
Probe 4÷20mA / 0÷10bar	16	0	0	1000	needless	0	1000	0	5	20	80	(#)	0	50	600 kPa
Probe 4÷20mA / 0÷16bar	16	0	0	1600	needless	0	1600	0	5	20	80	(#)	0	80	600 kPa
Probe 4÷20mA / 0÷25bar	16	0	0	2500	needless	0	2500	0	5	20	80	(#)	0	125	600 kPa
Probe 4÷20mA / 0÷40bar	16	0	0	4000	needless	0	4000	0	5	20	80	(#)	0	200	600 kPa
Probe 4÷20mA / 0÷60PSI	16	0	0	600	needless	0	600	0	5	20	80	(#)	0	30	300 (30PSI)
Probe4÷20mA / 0÷200PSI	16	0	0	2000	needless	0	2000	0	5	20	80	(#)	0	75	600 (60PSI)
Probe4÷20mA / 0÷300PSI	16	0	0	3000	needless	0	3000	0	5	20	80	(#)	0	120	600 (60PSI)
Siemens QBE2002 P4	17	0	0	400	needless	0	400	0	5	20	80	(#)	0	20	200 kPa
Siemens QBE2002 P10	17	0	0	1000	needless	0	1000	0	5	20	80	(#)	0	50	600 kPa
Siemens QBE2002 P16	17	0	0	1600	needless	0	1600	0	5	20	80	(#)	0	80	600 kPa
Siemens QBE2002 P25	17	0	0	2500	needless	0	2500	0	5	20	80	(#)	0	125	600 kPa
Siemens QBE2002 P40	17	0	0	4000	needless	0	4000	0	5	20	80	(#)	0	200	600 kPa
Signal 0÷10V	17	0	needless	needless	needless	needless	needless	needless	5	20	80	(#)			
Signal 4÷20mA	16	0	needless	needless	needless	needless	needless	needless	5	20	80	(#)			

NOTE:
(#) tt – servo control run time
SQL33 ; STM30; SQM10; SQM40; SQM50; SQM54 = 30 (secondi) - STA12B3.41; SQN30.251; SQN72.4A4A20 = 12 (secondi)
(*)These values are factory set - values must be set during operation at the plant based on the real working temperature/pressure value.

WARNING :
With pressure probes in bar the parameters SP1, SCH, SCL, HYS1, HYS3 must be set and displayed in kPa (kilo Pascal); 1bar = 100,000Pa = 100kPa.
With pressure probes in PSI the parameters SP1, SCH, SCL, HYS1, HYS3 must be set and displayed in PSI x10 (example: 150PSI > I display 1500).

APPENDIX: PROBES CONNECTION

To assure the utmost comfort, the control system needs reliable information, which can be obtained provided the sensors have been installed correctly. Sensors measure and transmit all variations encountered at their location.

Measurement is taken based on design features (time constant) and according to specific operating conditions.With wiring run in raceways, the sheath (or pipe) containing the wires must be plugged at the sensor's terminal board so that currents of air cannot affect the sensor's measurements.

Ambient probes (or ambient thermostats)

Installation

The sensors (or room thermostats) must be located in reference rooms in a position where they can take real temperature measurements without being affected by foreign factors.

It's good to be admired …even better to be effective

Heating systems: the room sensor must not be installed in rooms with heating units complete with thermostatic valves. Avoid all sources of heat foreign to the system.

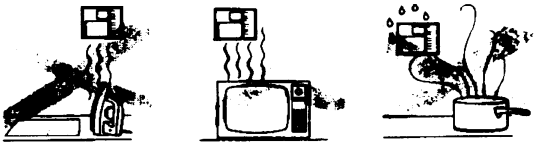

Location

On an inner wall on the other side of the room to heating unitsheight above floor 1.5 m, at least 1.5 m away from external sources of heat (or cold).

.

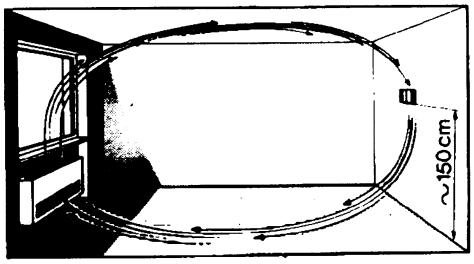

Installation position to be avoided

near shelving or alcoves and recesses, near doors or win-dows, inside outer walls exposed to solar radiation or currents of cold air, on inner walls with heating system pipes, domestic hot water pipes, or cooling system pipes running through them.

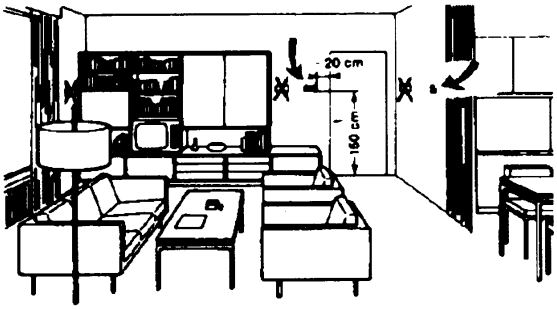

Outside probes (weather)Installation

In heating or air-conditioning systems featuring adjustment in response to outside temperature, the sensor's positioning is of paramount importance.

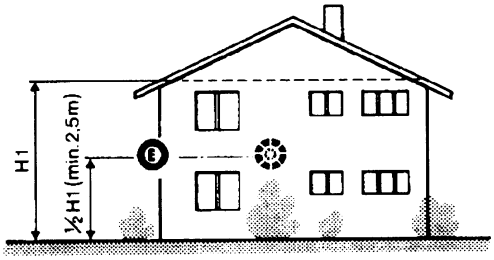

General rule: en on the outer wall of the building where the living rooms are, never on the south-facing wall or in a position where they will be affected by morning sun. If in any doubt, place them on the north or north-east façade.

Positions to be avoidedH

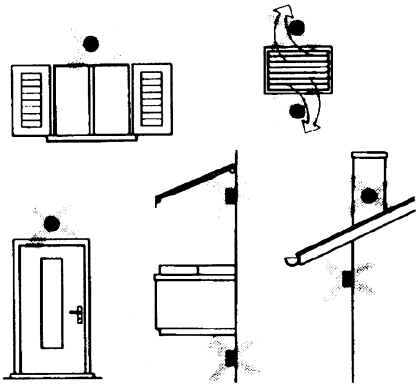

Avoid installing near windows, vents, outside the boiler room, on chimney breasts or where they are protected by balconies, cantilever roofs .

The sensor must not be painted (measurement error) .

Duct or pipe sensors

Installing temperature sensors

For measuring outlet air:

"after delivery fan or

"after coil to be controlled, at a distance of at least 0,5 m

For measuring room temperature:

"before return air intake fan and near room's return airintake.

For measuring saturation temperature: after mist eliminator.

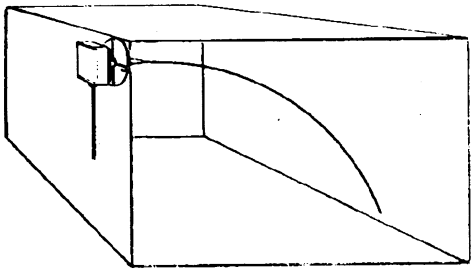

Bend 0.4m sensor by hand (never use tools) as illustrated .

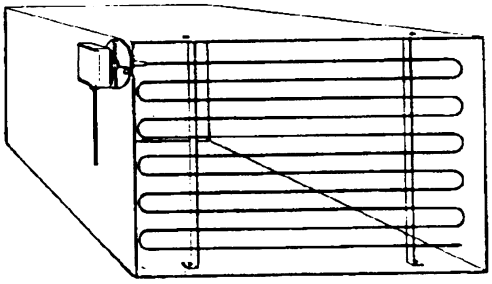

Use whole cross-section of duct, min. distance from walls 50 mm, radius of curvature 10 mm for 2m or 6m sensors

Installing combined humidity sensors

As max. humidity limit sensor on outlet (steam humidifiers) .

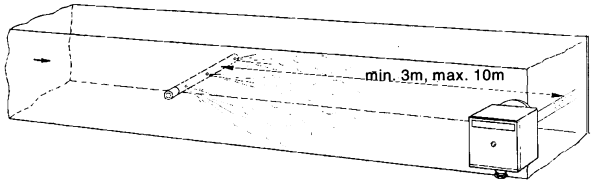

Installing pressure sensors

A - installation on ducts carrying fluids at max. temperature 80°C

B - installation on ducts at temperature over 80°C and for refrigerants

C - installation on ducts at high temperatures :

·"increase length of siphon

"place sensor at side to prevent it being hit by hot air coming from the pipe.

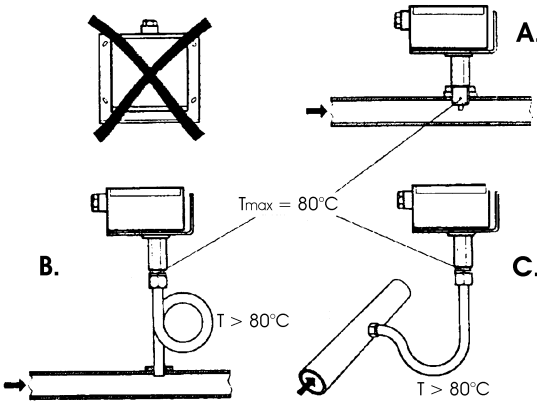

Installing differential pressure sensors for water

Installation with casing facing down not allowed.

With temperature over 80°C, siphons are needed.

To avoid damaging the sensor, you must comply with the following instructions :

when installing: make sure pressure difference is not greater than the value permitted by the sensor

when there are high static pressures, make sure you insert shutoff valves A-B-C.

Putting into operation

Start disable

1=open C1=open C

2=open A2=close B

3=open B3=close A

4= close C

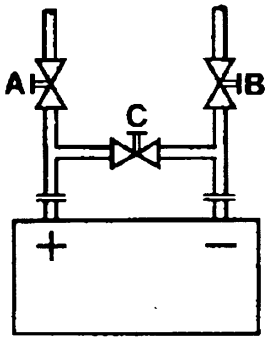

Immersion or strap-on sensors

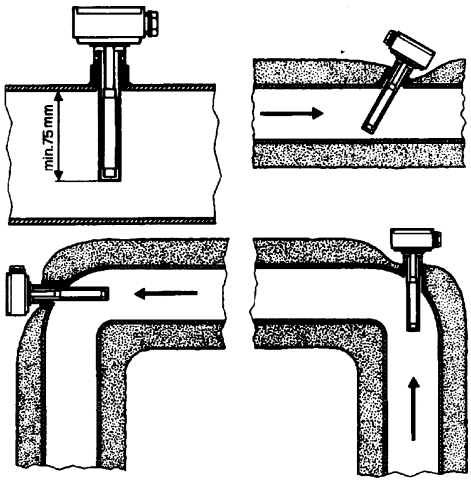

Immersion probes installation

Sensors must be installed on the stretch of pipe in which fluid circulates all the time.

The rigid stem (sensing element doing the measuring) must be inserted by at least 75mm and must face the direction of flow.

Recommended locations: on a bend or on a straight stretch of pipe but tilted by 45° and against the flow of fluid.

Protect them to prevent water from infiltrating (dripping gates, condensation from pipes etc.) .

Installing QAD2.. strap-on sensors

Make sure fluid is circulating in the chosen location.

Eliminate insulation and paintwork (including rust inhibitor) on a min. 100mm length of pipe.

Sensors come with straps for pipes up to 100 mm in diameter .

Placing the probes (QAD22.../QAE21.../QAP21.../RCA...)

With pumps on outlet

with 3 ways valves / with 4 ways valves

Panel system / burner control

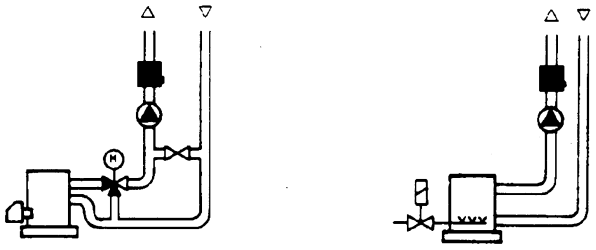

With pumps on return

with 3 ways valves / with 4 ways valves

Strap-on or immersion sensors?

QAD2.. strap-on sensors

Advantages :

- 10 sec. time constant
- Installed with system running (no plumbing work)
- Installation can be changed easily if it proves incorrect

ΠLimits:

- Suitable for pipe diameters max. 100 mm
- Can be affected by currents of air etc.

QAE2... immersion sensors

Advantages:

- Measure "mean" fluid temperature
- No external influence on measurement such as: currents of air, nearby pipes etc.

Limits:

- Time constant with sheath: 20 sec.
- Hard to change installation position if it proves incorrect

Installing differential pressure probes for air

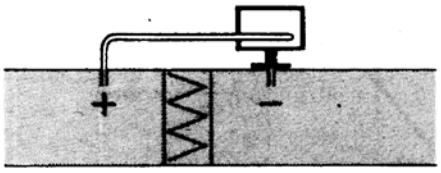

A - Control a filter (clogging)

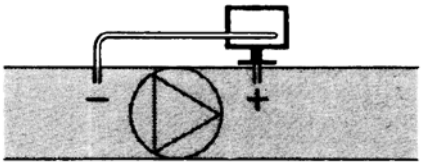

B - Control a fan (upstream/downstream)

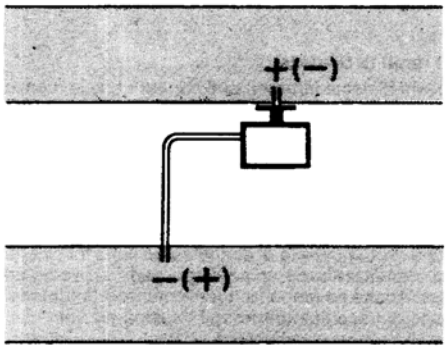

C - Measurement of difference in pressure between two ducts

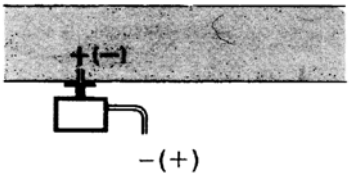

D - Measurement of difference in pressure between two rooms or of inside of duct and outside

Basic principles

Measuring static pressure(i.e. pressure exerted by air on pipe walls)

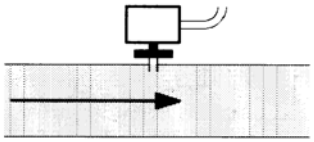

Measuring dinamic pressure

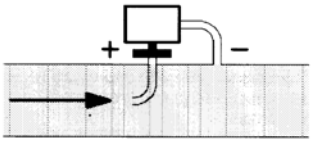

$$Pd = \frac{y\,\vartheta^2}{2g}$$

Legend

y	Kg/m3, specific weight of air
q	m/s, air speed
g	9.81 m/s2 gravity acceleration
Pd	mm C.A., dynamic pressure

Measuring total pressure

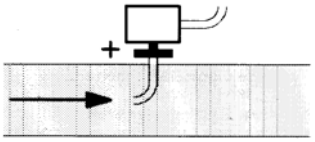

Note: Specifications and data subject to change. Errors and omissions excepted.

MANUALE USER SUPPORT

MULTI-THERMOSTAT

MCX06C

MCX06C is a multi-thermostat with four 100k NTC inputs. It can control up to 4 temperatures showing them (not more than 2 at the same time) on a couple of displays.
It is used to check and adjust oil heater temperatures. it works as follows:
as soon as the burner control gives the GO to the digital 1 input (terminals DI1-COM), the adjustment program runs (the relevant LED is ON). Reading the outlet temperature through the probe **Pb3** (terminals AI3-COM), a PID signal is produced. This signal becomes the set-point for the electric resistors. The electric resistors temperature is read through the probe **Pb1** (terminals AI1-COM) so that a second PID signal is produced. This second PID drives a couple of SCR by means of 0-10 V impulses in order to control the electric resistors temperature.
When the burner is in stand-by, resistor set-point is kept at the temperature set in parameter "**p30**" (see parameter group **REG**).
Probe **Pb4** (terminals AI4-COM) controls the inner heater temperature. As soon the relevant set-point is got, it drives the output number 4 (terminals C4-NO4) linked to the relais KTCN. This allows the oil pump to start and also the burner control proceeds with its cycle.
When set-point **trS** is got to, output number 5 is ON (terminals C5-NO5) linked to the relais KTRS. It switches the resistors off and activates an alarm on the device.
Probe **Pb2** (terminals AI2-COM), when fitted, drives output number 2 (terminals C2-NO2) linked to the relais KTCI. This allows the burner control to proceed with ignition.
See below the set-point recommended figures.

User interface:

Device:

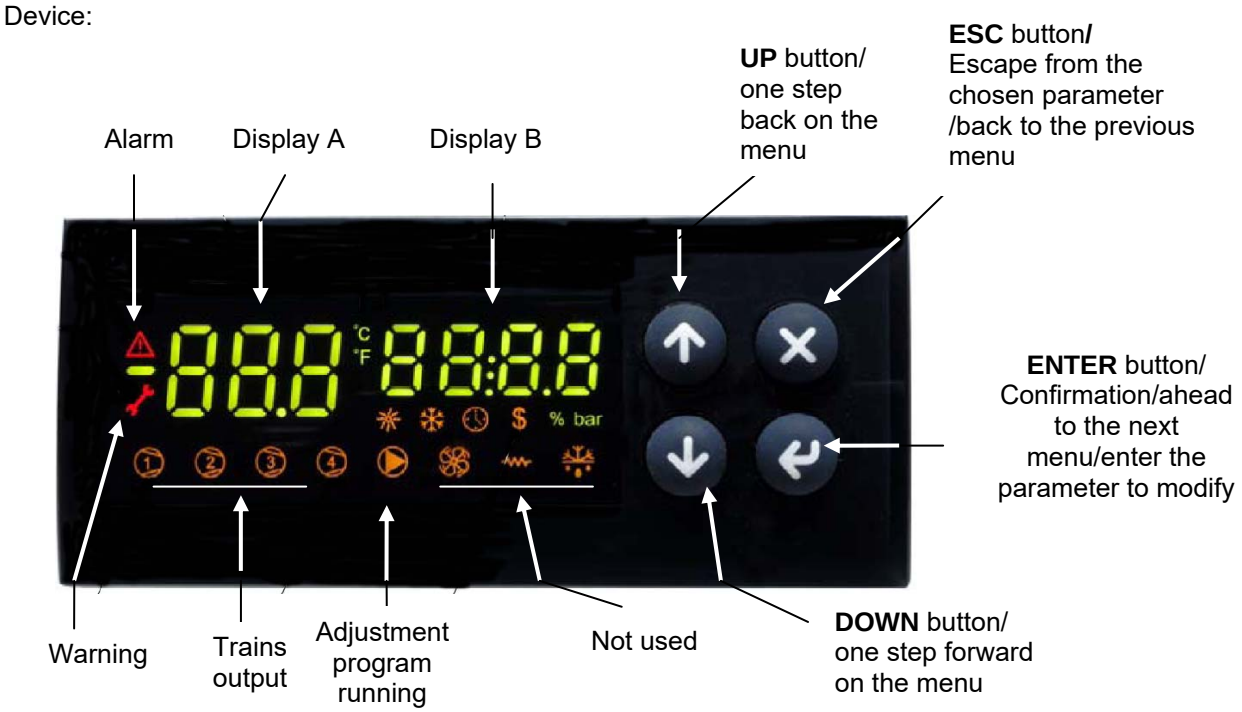

Note :
In normal operation, the display A shows the oil tank resistor temperature (probe Pb1).
In normal operation, the display B shows the oil output temperature (probe Pb3).

Connections from terminal side :

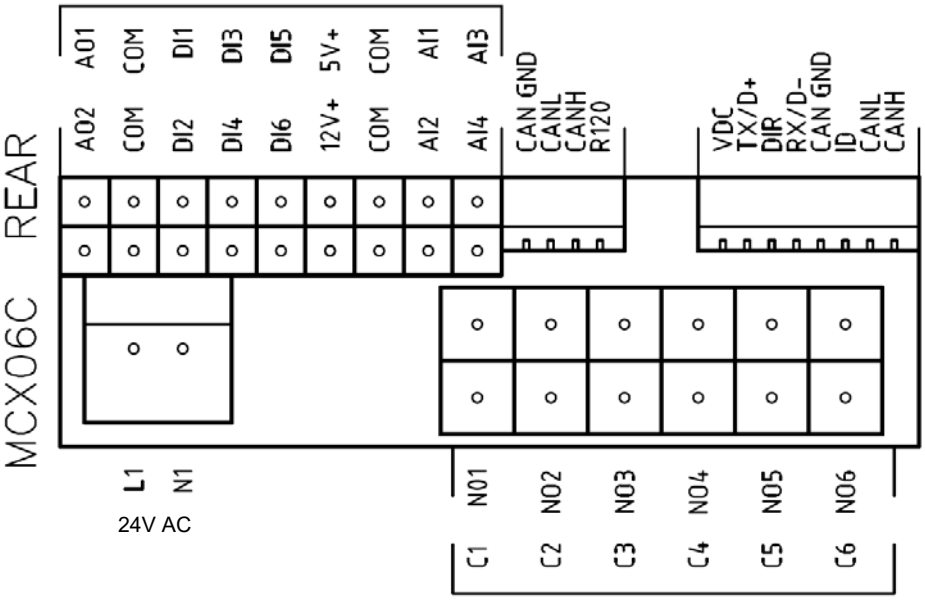

Probe connection:

input **AI1** = probe **Pb1** = set-point "**tr**" = oil heater temperature probe;
input **AI2** = probe **Pb2** = set-point "**tCI**" = plant consent temperature probe (when installed);
input **AI3** = probe **Pb3** = set-point "**OIL**" = oil heater output temperature probe (PID regulation);
input **AI4** = probe **Pb4** = set-point "**tcn**" = oil heater consent temperature probe.

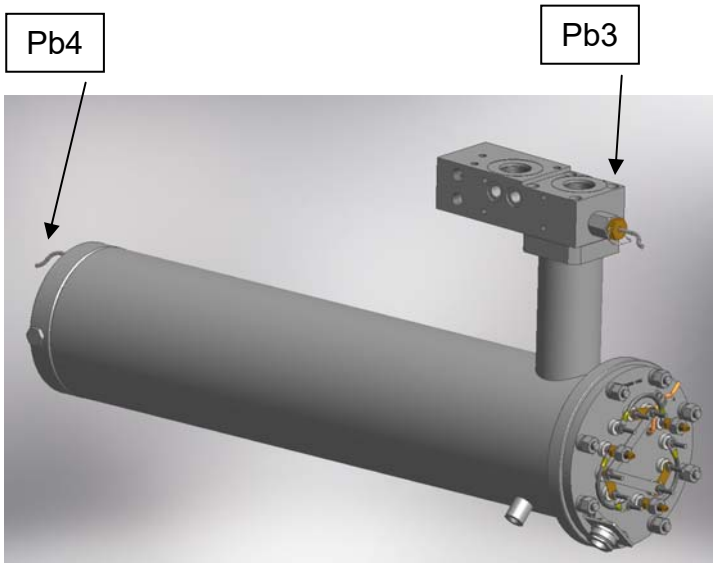

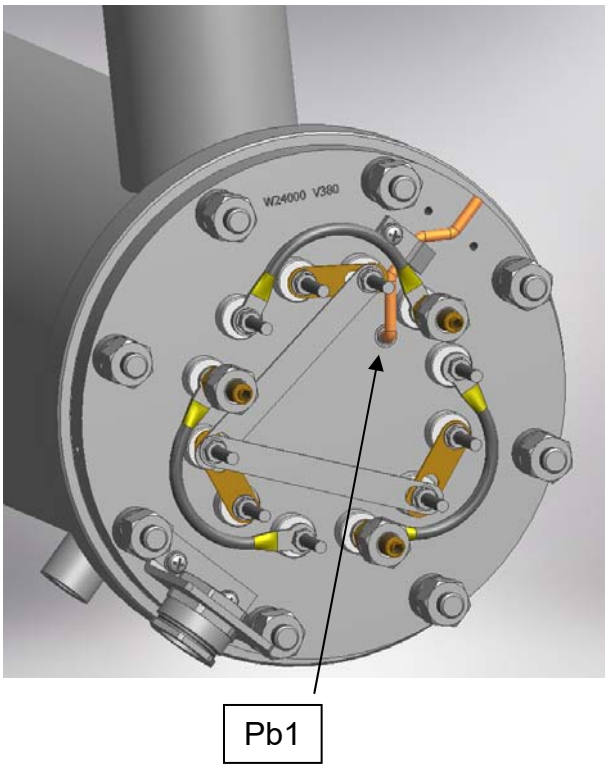

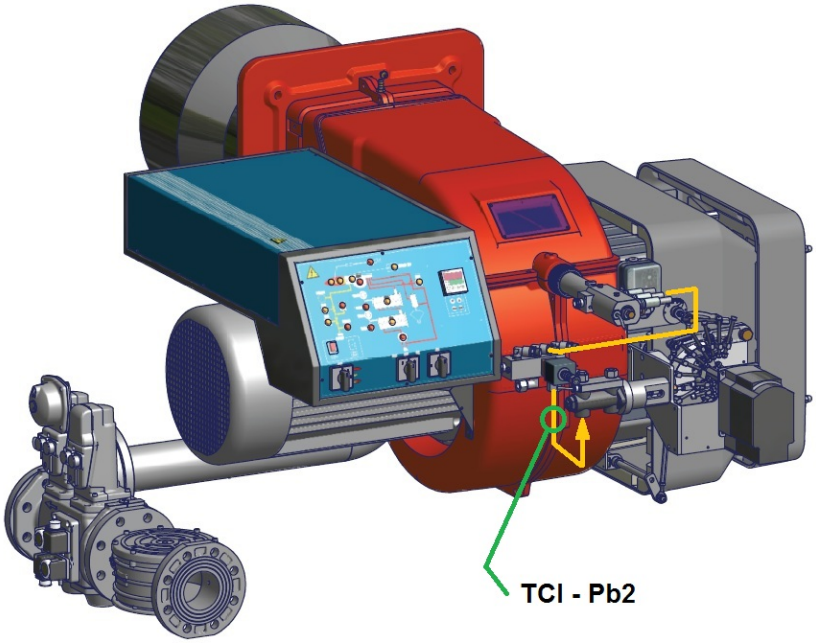

(**tCI - Pb2** probe only for mechanical atomizing burners)

Menu :
To enter the menu below, keep pushing **ENTER** for more than 3 s.

Menu code	Sub-menu code	Function	Notes
Prb		Probes values	You can see in sequence the 4 probe values (UP and DOWN keys): the probe code is on display A (Pb1,..., Pb4) and the probe value is on display B (not fitted or out of work probes show "----").
Log		Login	It defines the access level to menu and parameters (password)
	PAS	Password	Password input
Par		Parameters menu	Access to parameters (you have to login first)
	CnF	Configuration menu	Parameter configuration
	rEG	Regulation menu	Set to set-point, probe, thresholds etc.
ALA		Alarm menu	Access to alarm management
	Act	Active alarms	Show the active alarms
	rES	Reset alarms	Reset of the manual reset alarms
Loc		Lock/Unlock functions	Not used
InF	rEL	Software version	Installed software version
tUN		Autotuning	Activation On, deactivation ESC PID parameter autotuning

Login:
All the parameters inside the **Par** menu are locked by a password.
Without password, only set-points can be modified.
To login, on the log menu, press **ENTER** for more than 3 s. Input your password (level 2 or 3) inside **PAS**
With password for level 3 all the data can be set.

submenu **CnF - configuration parameters group :**

Menu	Parameter	Description	Additional description	Min	Max	Default	U.M.	Visibility condition	Password level	Modbus index
CnF		**CONFIGURATION**							0	
AI1		Analog Input 1							1	
	A1P	Probe 1 Presence	This parameter enables or disables the probe	0	1	1			2	1
	A1C	Calibration Probe 1	Don't modify it	-20,0	20,0	0,0	°C	A1P >0	3	2
AI2		Analog Input 2							1	
	A2P	Probe 2 Presence	This parameter enables or disables the probe	0	1	1			2	3
	A2C	Calibration Probe 2	Don't modify it	-20,0	20,0	0,0	°C	A2P >0	3	4
AI3		Analog Input 3							1	
	A3P	Probe 3 Presence	This parameter enables or disables the probe	0	4	1			2	5
	A3L	Min. Value conversion AI3	Don't modify it	-999,9	999,9	0,0		A3P >2	3	6
	A3H	Max. Value conversion AI3	Don't modify it	-999,9	999,9	30,0		A3P >2	3	7
	A3C	Calibration Probe 3	Don't modify it	-20,0	20,0	0,0	°C	A3P >0	3	8
AI4		Analog Input 4							1	
	A4P	Probe 4 Presence	This parameter enables or disables the probe	0	4	1			2	9
	A4L	Min. Value conversion AI4	Don't modify it	-999,9	999,9	0,0		A4P >2	3	10
	A4H	Max. Value conversion AI4	Don't modify it	-999,9	999,9	30,0		A4P >2	3	11
	A4C	Calibration Probe 4	Don't modify it	-20,0	20,0	0,0	°C	A4P >0	3	12
dI		Digital input							1	
	dI1	Input 1 polarity (Pump)	Change type of digital input (NC o NO)	0	1	1			3	13
	dI2	Alarm polarity from input 2	Change type of digital input (NC o NO)	0	2	2			2	14
	dI3	Alarm polarity from input 3	Change type of digital input (NC o NO)	0	2	2			2	15
	dI4	Alarm polarity from input 4	Change type of digital input (NC o NO)	0	2	2			2	16
	dI5	Alarm polarity from input 5	Change type of digital input (NC o NO)	0	2	2			2	17
	dI6	Alarm polarity from input 6	Change type of digital input (NC o NO)	0	2	2			2	18
dI		Digital output Alarm and Warning							1	
	dO5	Polarity output Warning	Change type of digital input (NC o NO)	0	1	0			3	19
	dO6	Polarity output Alarm	Change type of digital input (NC o NO)	0	1	0			3	20
SIC		Safety probe							1	
	SIp	Selection of safety probe	Probe which also activates the relay Warning (ns. KTRS)	0	4	4			3	21
SyS		Syistem							0	
	dSA	display A output	Probe temperature or set-point to be displayed in the left display	0	8	1			3	22
	dSb	display B output	Probe temperature or set-point to be displayed in the right display	0	8	3			3	23
PAS		Password							1	
	PL1	Password level 1		0	9999	0			1	32
	PL2	Password level 2		0	9999				2	33
	PL3	Password level 3		0	9999				3	34

Menu	Parameter	Description	Additional description	Min	Max	Default	U.M.	Visibility condition	Level	Modbus index
tUN		Autotuning							3	
	tU1	Output temperature hysteresis	Don't modify it	0	50,0	0,5	°C		3	35
	tU2	Startup number	Don't modify it	0	5	2			3	36
	tU3	Measurement cycles number	Don't modify it	1	4	2			3	37
	tU4	Max. differential command exit	Don't modify it	0,01	10,00	10,00	V		3	38
	tU5	Differential reduction exit command (%)	Don't modify it	0	100	15			3	39
	tU6	Calculating mode: 0= Symmetrical; 1=Asymmetrical; 2=Simple	Don't modify it	0	2	2			3	40
	tU7	Enabling	Don't modify it	0	1	1			3	41

Submenu **REG – regulation parameters group :**

Menu	Parameter	Description	Additional description	Min	Max	Default	U.M.	Visibility condition	Level	Modbus index
REG		**REGULATION**							0	
Pb1		Probe 1							0	
	rES	Set-point Probe 1 (Tank resistor)	Don't modify it	-50,0	200,0	0,0	°C		3	42
	AL1	Probe 1 - Low Temperature Alarm Threshold	Don't modify it	-50,0	200,0	-50,0	°C		3	43
	AH1	Probe 1 - High Temperature Alarm Threshold	Don't modify it	-50,0	200,0	200,0	°C		3	44
	d01	Probe 1 differential		0,0	20,0	3,0	°C		3	45
Pb2		Probe 2							0	
	tCI	Set-point Probe 2 (Plant Consent)	Plant consent according to table "**Set point adjustment**"	-50,0	200,0	120,0	°C		0	46
	AL2	Probe 2 - Low Temperature Alarm Threshold	Don't modify it	-50,0	200,0	-50,0	°C		2	47
	AH2	Probe 2 - High Temperature Alarm Threshold	Don't modify it	-50,0	200,0	200,0	°C		2	48
	d02	Probe 2 differential		0,0	20,0	3,0	°C		2	49
Pb3		Probe 3							0	
	rE3	Type of regulation of probe 3 (Oil tank exit)	Type of regulation 0= thermostat; 1= PID (don't modify)	0	1	1			3	50
	OIL	Set-point Probe 3 (Oil tank exit)	Nozzle oil temperature according to the table "**Set point adjustment**"	-50,0	200,0	130,0	°C		0	51
	AL3	Probe 3 - Low Temperature Alarm Threshold (Oil tank exit)	Don't modify it	-50,0	200,0	-50,0	°C		2	52
	AH3	Probe 3 - High Temperature Alarm Threshold (Oil tank exit)	Don't modify it	-50,0	200,0	200,0	°C		2	53
	Pb3	Proportional band for PID Probe 3 (Oil tank exit)	Proportional band for first PID regulation	0,0	200,0	60,0			3	54
	db3	Dead Zone for PID Probe 3 (Oil tank exit)	Dead zone for first PID regulation	0,0	20,0	0,0	°C	rE3 =1	3	55
	rt3	Integral Time (Ti) for PID Probe 3 (Oil tank exit)	Integral time for first PID regulation	0,0	1000,0	120,0	s	rE3 =1	3	56
	dt3	DerivativeTime (Td) for PID Probe 3 (Oil tank exit)	Derivative time for first PID regulation (~ ¼ di rt3)	0,0	300,0	30,0	s	rE3 =1	3	57
	db3	Dead Zone for PID Probe 3 (Oil tank exit)	Dead zone for first PID regulation	0,0	20,0	0,0	°C	rE3 =1	3	55

Menu	Parameter	Description	Additional description	Min	Max	Default	U.M.	Visibility condition	Level	Modbus index
	pi1	Overshooting for Integral action (Oil tank exit)	Don't modify it	100	1000	200		rE3 =1	3	58
	pi2	Derivative action enabling (Oil tank exit)	Don't modify it	0	1	1		rE3 =1	3	59
	pi3	Filtering factor for derivative action (Oil tank exit)	Don't modify it	1	100	20		rE3 =1	3	60
	pi4	Duty cicle PWM for output DO3 and/or AO1 (0-10V)	Don't modify it	1	300	5	s	rE3 =1	3	61
	SL3	Output selection DO3 and/or AO1 (0-10V)	Digital selection output for control thyristors; Don't modify it	0	2	AO1			3	62
	p21	Proportional band for PID Probe 1 (Tank resistor)	Proportional band for second PID regulation	0,0	200,0	50,0		rE3 =1	3	63
	p22	Dead Zone for PID Probe 1 (Tank resistor)	Dead zone for second PID regulation	0,0	20,0	0,0	°C	rE3 =1	3	64
	p23	Integral Time (Ti) for PID Probe 1 (Tank resistor)	Integral time for second PID regulation	0,0	1000,0	110,0	s	rE3 =1	3	65
	p24	DerivativeTime (Td) for PID Probe 1 (Tank resistor)	Derivative time for second PID regulation	0,0	300,0	23,0	s	rE3 =1	3	66
	p25	Overshooting for Integral action (Tank resistor)	Don't modify it	100	1000	200		rE3 =1	3	67
	p26	Derivative action enabling (Tank resistor)	Don't modify it	0	1	1		rE3 =1	3	68
	p27	Filtering factor for derivative action (Tank resistor)	Don't modify it	1	100	20		rE3 =1	3	69
	p28	Min Output PID Probe 3 (Oil tank exit)	Minimum value tank resistor set-point (delta of 100°C above p29)	0,0	1000,0	80,0	°C	rE3 =1	3	70
	p29	Max Output PID Probe 3 (Oil tank exit)	Maximum valuetank resistor set-point	0,0	1000,0	180,0	°C	rE3 =1	3	71
	SP0	Set-point Tank Resistor with oil pump stops (stand by)	Set-point of maintaining resistance during stand by "**Set point adjustment**"	-50,0	200,0	140,0	°C	rE3 =1	0	72
Pb4		Probe 4							0	
	tcn	Setpoint Probe 4 (Oil consent)	Oil consent according table "**Set point adjustment**"	-50,0	200,0	110,0	°C		0	73
	AL4	Low Threshold Probe 4		-50,0	200,0	-50,0	°C		2	74
	trS	Probe 4 - High Temperature Alarm Threshold (Safety Thermostat)	Tank resistor safety temperature according table "**Set point adjustment**"	-50,0	200,0	190,0	°C		0	75
	d04	Probe 4 differential		0,0	20,0	3,0	°C		2	76

Alarms & Warning:
When the red triangle on the top left lights, one or more alarms are activated.
When the red key on the left lights, the output N05-C5 is active and the relay **KTRS** switches the resistors OFF.
Check the reason, correct the failure and, as soon as the temperature is lower than **trS**, reset it through **ALA**/**rES .**
In order to show active alarms and warnings, select the relevant menu through **ALA**/**Act**.and, using the **UP** and **DOWN** buttons, scroll the lines.
In order to perform the manual reset, select **ALA**/**rES**.

Code	Description	Sourse	Active simbol	Reset type
trS	High temperature resistors alarm	probe Pb4 > value trS	red key	Manual
EP1	Probe Pb1 fault	Probe Pb1 fault	red triangle	Automatic
EP2	Probe Pb2 fault	Probe Pb2 fault	red triangle	Automatic
EP3	Probe Pb3 fault	Probe Pb3 fault	red triangle	Automatic
EP4	Probe Pb4 fault	Probe Pb4 fault	red triangle	Automatic

Set point adjustment:

All the parameters inside the **Par** menu are locked by a password. The user can modify only set points, without using any passwords.
The oil viscosity at the nozzle, should be about 1,5°E, which guarantees correct and safe functioning of the burner.
The temperature values in the table, guarantee the respect of that parameter and are valid when the pre heating tank is installed on the burner. For different configurations , please refer to the chapter "Recommendations to design heavy oil feeding plants" on the burner manual
Here below recommended set points:

Menu path				Oil viscosity at 50 °C according to the letter shown in the burner model				
				P	**N**	**E**	**D**	**H**
				89 cSt	< 50 cSt	> 50 cSt < 110 cSt	> 110 cSt < 400 cSt	> 400 cSt < 4000 cSt
				12 °E	< 7°E	> 7 °E < 15 °E	> 15 °E < 50 °E	> 50 °E < 530 °E
Par								
rEG	Pb1	tr	Oil heater temperature probe	parameter not visible				
	Pb2	tCI	Plant consent temperature probe (when installed)	20 °C	70 °C	70 °C	70 °C	---
	Pb3	Oil	oil heater output temperature probe (PID regulation);	60-70 °C	110-120 °C	120-130 °C	130-140 °C	140-150 °C
		SP0	Set-point oil heater with oil pump stopped (stand-by)	45 °C	120 °C	130 °C	140 °C	150 °C
	Pb4	tcn	Oil heater consent temperature probe	40 °C	100 °C	100 °C	110 °C	120 °C
		trS	Safety temperature tank resistors (manual reset)	120 °C	190-200 °C	190-200 °C	190-200 °C	190-200 °C

The above temperature values are suggested and refer to a plant designed according to the prescriptions in the burner user manual.
The suggested values can change in reference to the fuel oil specifications.

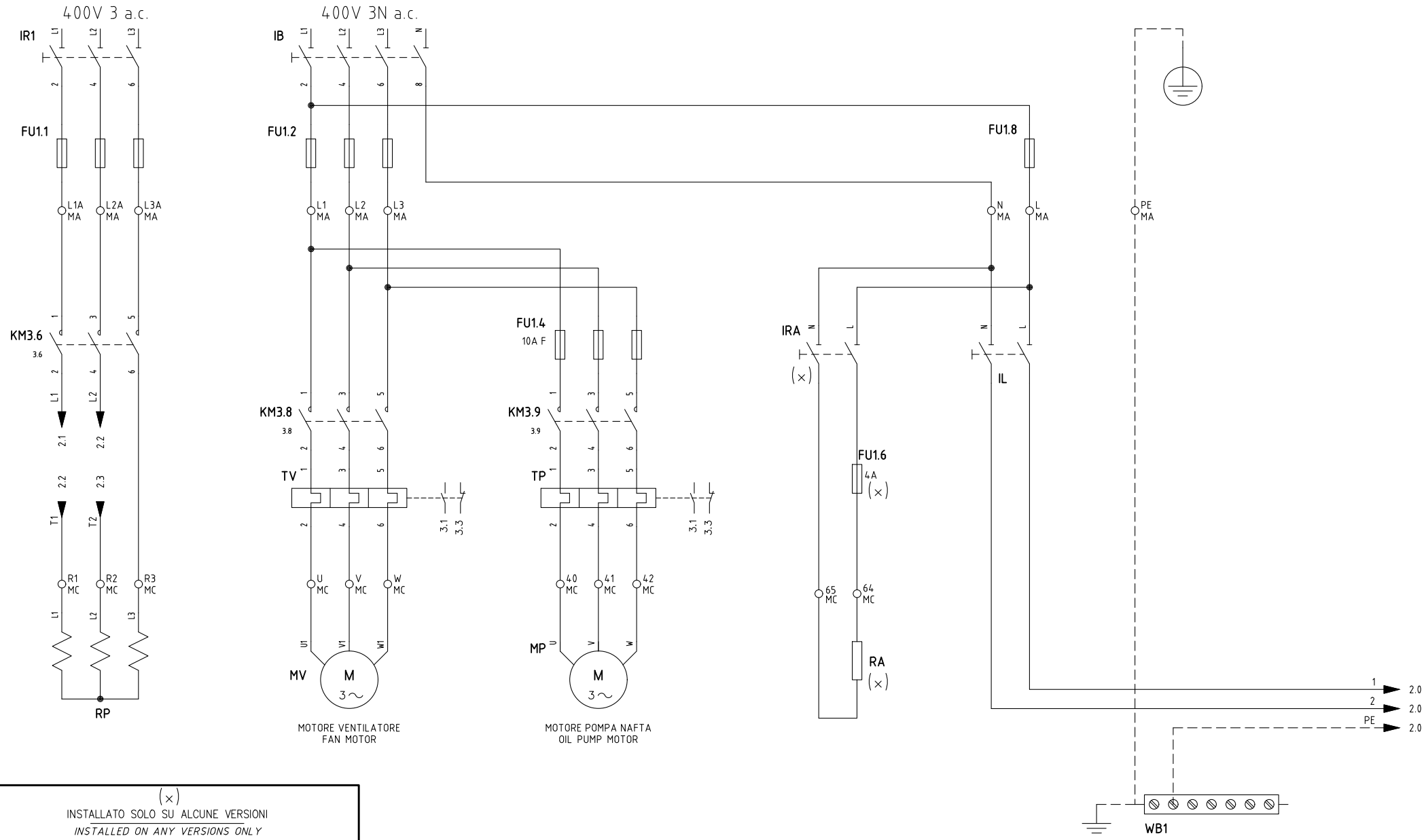

(x)
INSTALLATO SOLO SU ALCUNE VERSIONI
INSTALLED ON ANY VERSIONS ONLY

REV.	MODIFICA	DATA	FIRME
01	RELAY "KTRS" MODIFIED	02/11/17	U. PINTON

UNIGAS

Impianto: *TIPO/TYPE RN510*
MODELLO/MODEL x–.MD.S.xx.A

Descrizione: *VERSIONE CON MULTI–TERMOSTATO MCX06C*
VERSION WITH MCX06C MULTI–THERMOSTAT

Ordine:
Commessa:
Esecutore: U. PINTON
Data Controllato: 02/11/2017
Controllato: M. MASCHIO

Data: 29/02/2016
Revisione: 01
Dis. N. 11 – 0501

PREC.: /
FOGLIO: 1
SEGUE: 2
TOTALE: 9

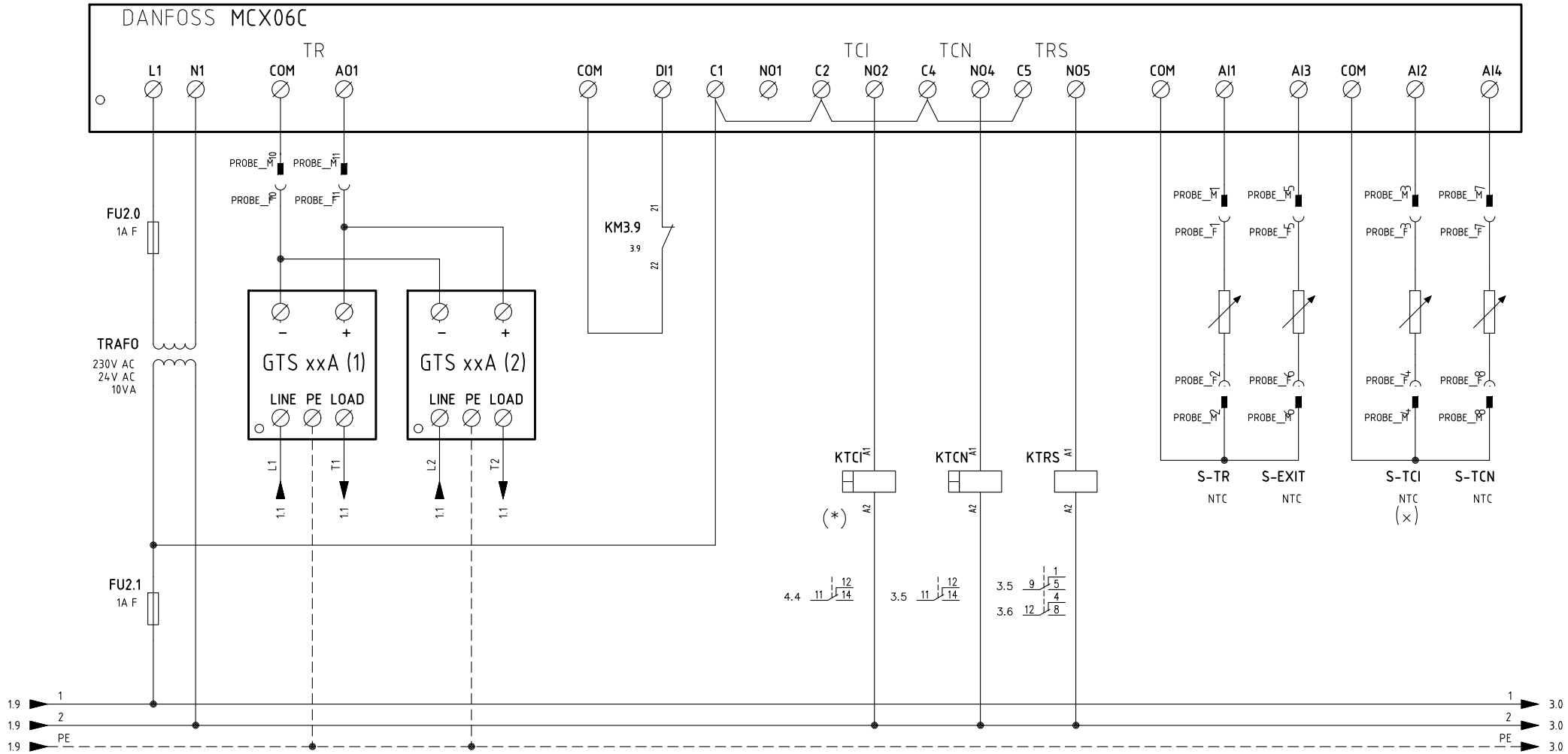

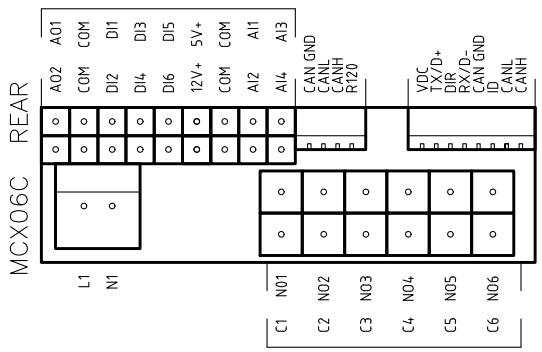

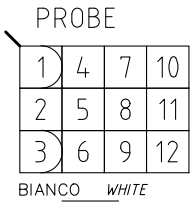

VISTA LATO COMPONENTI (SONDE)
COMPONENTS SIDE VIEW (PROBE)

(×)
INSTALLATO SOLO SU ALCUNE VERSIONI
INSTALLED ON ANY VERSIONS ONLY

Data 29/02/2016		PREC.	FOGLIO
Revisione 01		1	2
Dis. N. 11 – 0501		SEGUE	TOTALE
		3	9

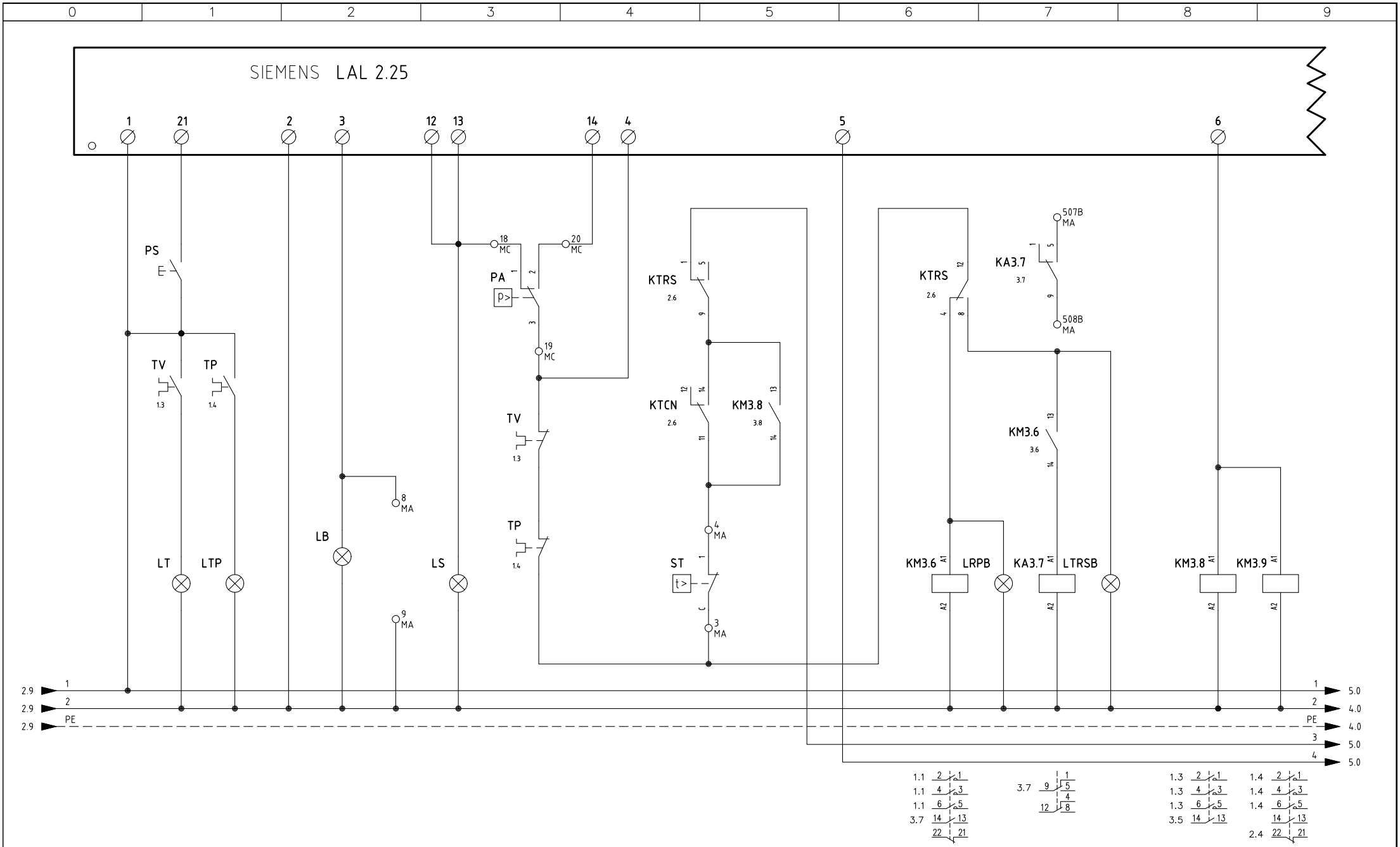

Data 29/02/2016		PREC.	FOGLIO
Revisione 01		2	3
Dis. N. 11 – 0501		SEGUE	TOTALE
		4	9

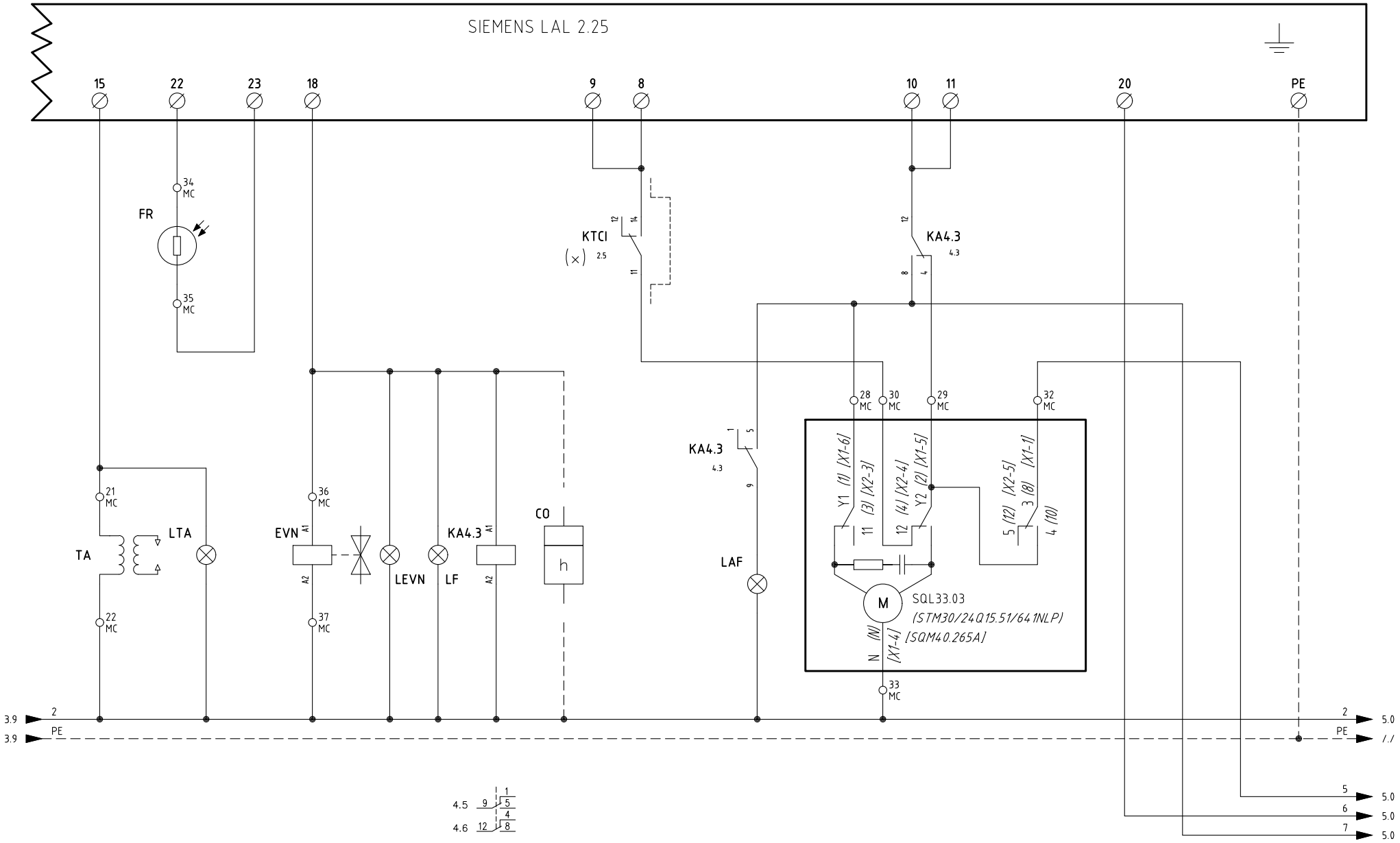

(x)
INSTALLATO SOLO SU ALCUNE VERSIONI
INSTALLED ON ANY VERSIONS ONLY

Data	29/02/2016	PREC.	FOGLIO
Revisione	01	3	4
Dis. N.	11 – 0501	SEGUE	TOTALE
		5	9

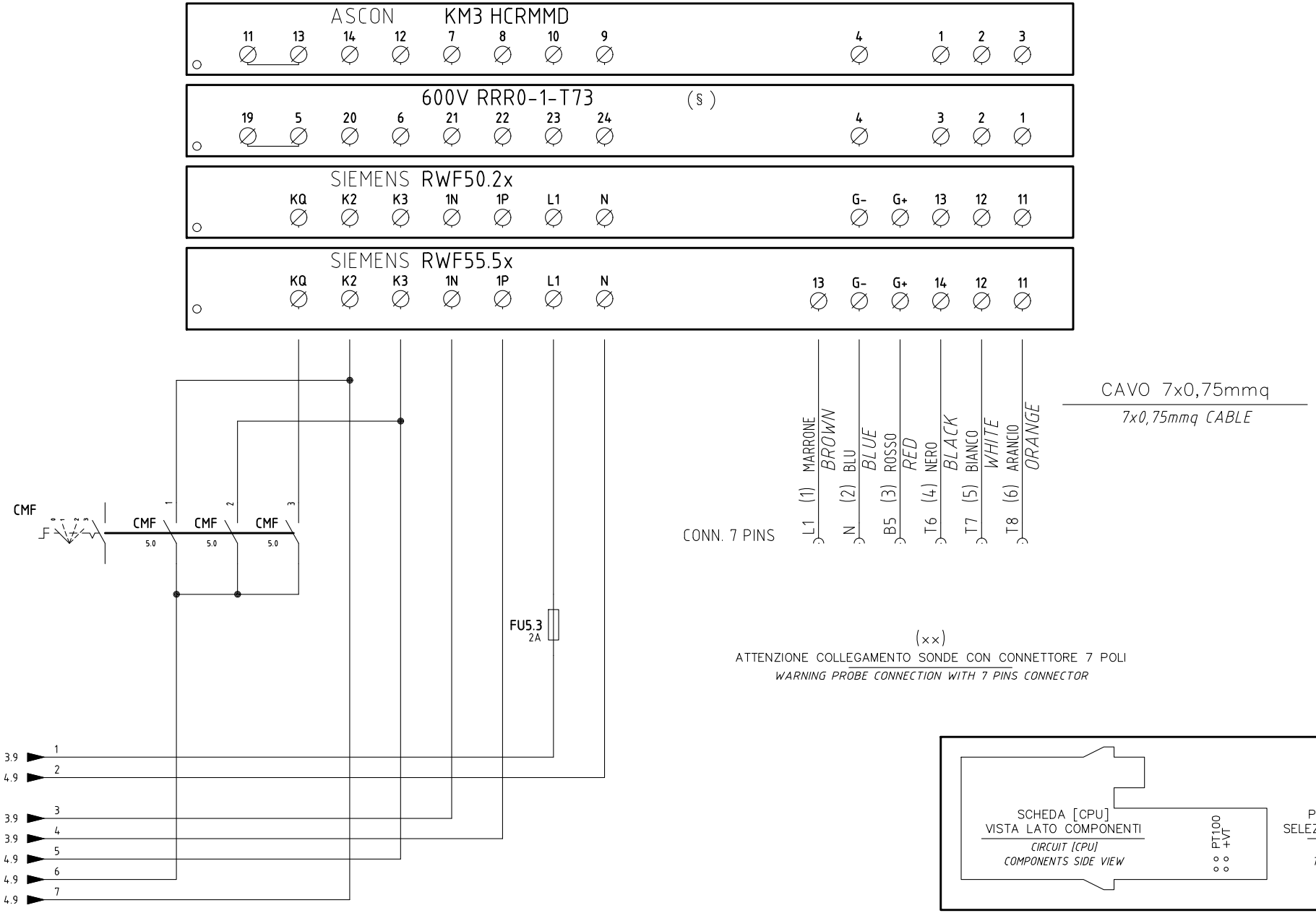

Data 29/02/2016		PREC.	FOGLIO
Revisione 01		4	5
Dis. N. 11 – 0501		SEGUE	TOTALE
		6	9

(xx)
ATTENZIONE COLLEGAMENTO SONDE CON CONNETTORE 7 POLI
WARNING PROBE CONNECTION WITH 7 PINS CONNECTOR

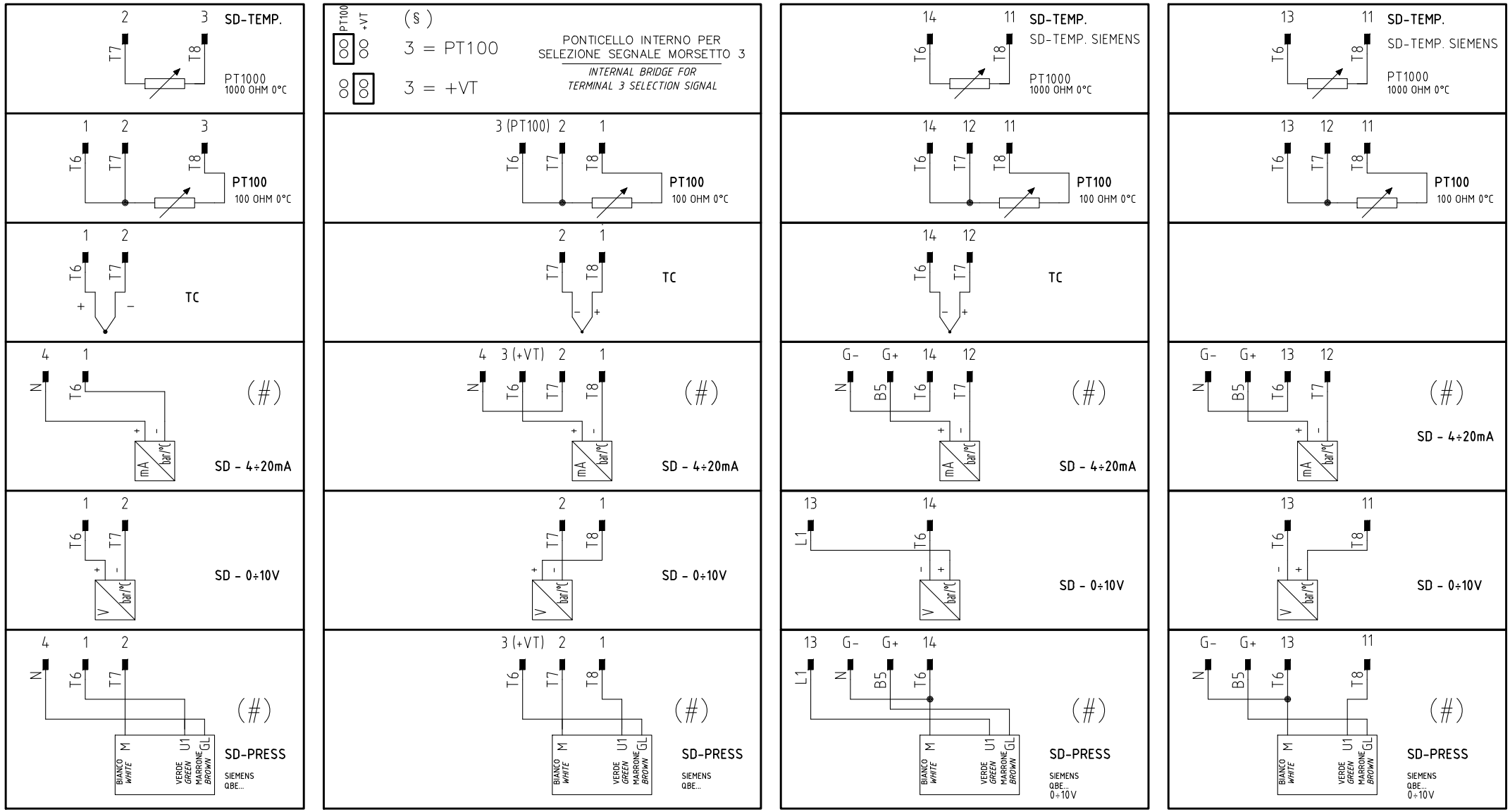

(#)
COLLEGAMENTO SOLO PER
TRASDUTTORI PASSIVI
TRASDUCER PASSIVE
CONNECTION ONLY

Data 29/02/2016		PREC.	FOGLIO
Revisione 01		5	6
Dis. N. 11 – 0501		SEGUE	TOTALE
		7	9

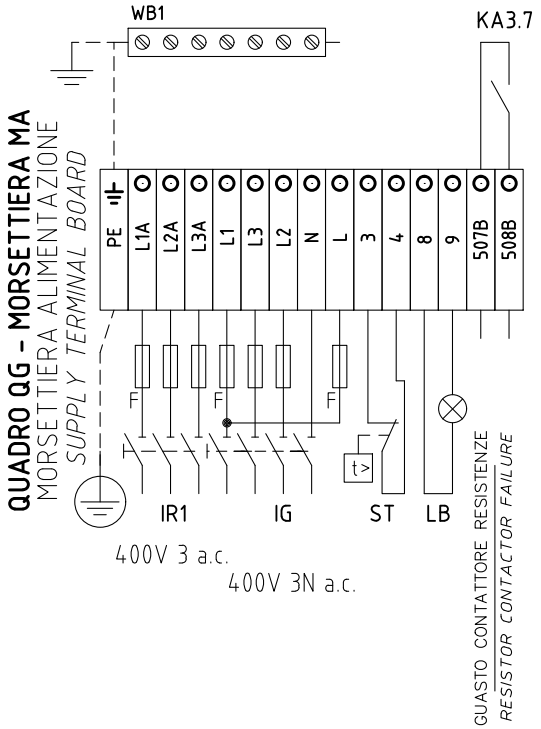

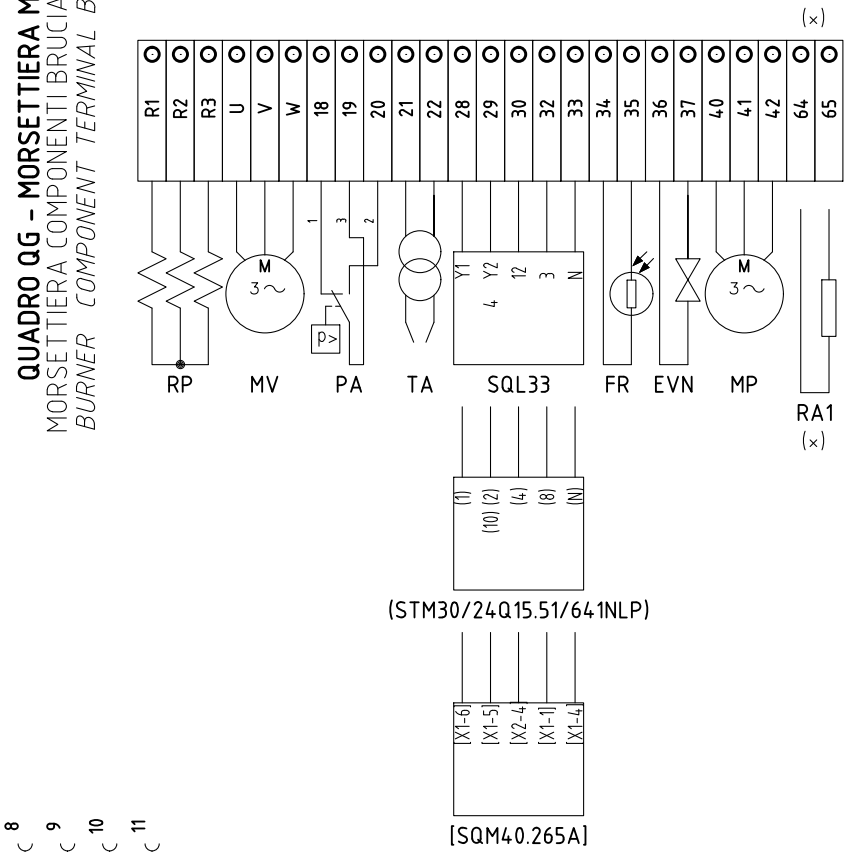

SERVOCOMANDO SERRANDA ARIA

AIR DAMPER ACTUATOR

[SQM40.265A]

I	ALTA FIAMMA *HIGH FLAME*
II	SOSTA E ACCENSIONE *STAND-BY AND IGNITION*
III	BASSA FIAMMA *LOW FLAME*

SERVOCOMANDO SERRANDA ARIA (ALTERNATIVO)

AIR DAMPER ACTUATOR (ALTERNATIVE)

(STM30/24Q15.51/641NLP)

I	ALTA FIAMMA *HIGH FLAME*
II	SOSTA E ACCENSIONE *STAND-BY AND IGNITION*
III	BASSA FIAMMA *LOW FLAME*

SERVOCOMANDO SERRANDA ARIA (ALTERNATIVO)

AIR DAMPER ACTUATOR (ALTERNATIVE)

SQL33.03

Y1	ALTA FIAMMA *HIGH FLAME*
Y2	SOSTA E ACCENSIONE *STAND-BY AND IGNITION*
3	BASSA FIAMMA *LOW FLAME*

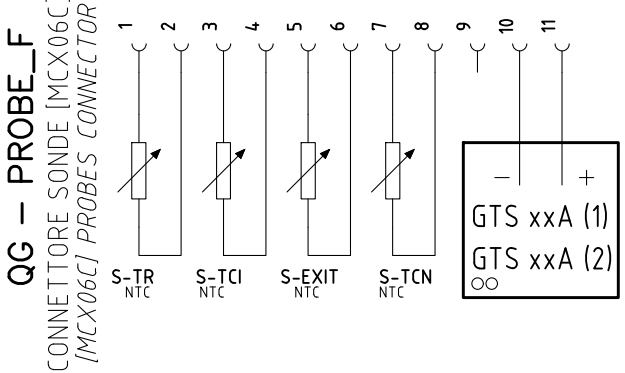

(x)
INSTALLATO SOLO SU ALCUNE VERSIONI
INSTALLED ON ANY VERSIONS ONLY

Data 29/02/2016		PREC.	FOGLIO
Revisione 01		6	7
Dis. N. 11 – 0501		SEGUE	TOTALE
		8	9

	Sigla/Item	Foglio/Sheet	Funzione	Function
	600V RRR0-1-T73	5	REGOLATORE MODULANTE (ALTERNATIVO)	BURNER MODULATOR (ALTERNATIVE)
	(STM30/24Q15.51/641NLP)	4	SERVOCOMANDO SERRANDA ARIA (ALTERNATIVO)	AIR DAMPER ACTUATOR (ALTERNATIVE)
	CMF	5	COMMUT. MANUALE FUNZ. 0)FERMO 1)ALTA FIAMMA 2)BASSA FIAMMA 3)AUTOMATICO	MANUAL SWITCH 0)OFF 1)HIGH FLAME 2)LOW FLAME 3)AUTOMATIC
	CO	4	CONTAORE DI FUNZIONAMENTO (OPTIONAL)	OPERATION TIME COUNTER (OPTIONAL)
	EVN	4	ELETTROVALVOLA NAFTA	OIL SOLENOID VALVE
	FR	4	FOTORESISTENZA RILEVAZIONE FIAMMA	PHOTORESISTOR FLAME DETECTOR
	FU1.1	1	FUSIBILI LINEA PRERISCALDATORE [RPA]	LINE PRE-HEATING [RPA] FUSES
	FU1.2	1	FUSIBILI LINEA MOTORE VENTILATORE	FAN MOTOR LINE FUSES
	FU1.4	1	FUSIBILI LINEA POMPA	PUMP LINE FUSES
(x)	FU1.6	1	FUSIBILE RESISTENZE AUSILIARIE	AUXILIARY HEATERS FUSE
	FU1.8	1	FUSIBILE LINEA AUSILIARI	AUXILIARY LINE FUSE
	FU2.0	2	FUSIBILE AUSILIARIO	AUXILIARY FUSE
	FU2.1	2	FUSIBILE AUSILIARIO	AUXILIARY FUSE
	FU5.3	5	FUSIBILE	FUSE
	GTS xxA (1)	2	TIRISTORE	THYRISTOR
	GTS xxA (2)	2	TIRISTORE	THYRISTOR
	IB	1	INTERRUTTORE LINEA BRUCIATORE	BURNER LINE SWITCH
	IL	1	INTERRUTTORE LINEA AUSILIARI	AUXILIARY LINE SWITCH
	IR1	1	INTERRUTTORE LINEA RESISTENZE PRERISCALDATORE [RPA]	PRE-HEATING RESISTOR [RPA] LINE SWITCH
(x)	IRA	1	INTERRUTTORE RESISTENZE AUSILIARIE	AUXILIARY HEATERS SWITCH
	KA3.7	3	RELE'' AUSILIARIO SEGNALAZIONE GUASTO CONTATTORE RESISTENZE	AUXILIARY RELAY FOR RESISTOR CONTACTOR FAILURE
	KA4.3	4	RELE'' AUSILIARIO	AUXILIARY RELAY
	KM3.6	3	CONTATTORE RESISTENZE PRERISCALDATORE [RPB]	PRE-HEATING RESISTOR [RPB] CONTACTOR
	KM3.8	3	CONTATTORE MOTORE VENTILATORE	FAN MOTOR CONTACTOR
	KM3.9	3	CONTATTORE MOTORE POMPA NAFTA	OIL PUMP MOTOR CONTACTOR
	KM3 HCRMMD	5	REGOLATORE MODULANTE (ALTERNATIVO)	BURNER MODULATOR (ALTERNATIVE)
(x)	KTCI	2	RELE'' AUSILIARIO	AUXILIARY RELAY
	KTCN	2	RELE'' AUSILIARIO	AUXILIARY RELAY
	KTRS	2	RELE'' AUSILIARIO	AUXILIARY RELAY
	LAF	4	LAMPADA SEGNALAZIONE ALTA FIAMMA BRUCIATORE	BURNER IN HIGH FLAME INDICATOR LIGHT
	LAL 2.25	3	APPARECCHIATURA CONTROLLO FIAMMA	CONTROL BOX
	LB	3	LAMPADA SEGNALAZIONE BLOCCO BRUCIATORE	INDICATOR LIGHT FOR BURNER LOCK-OUT
	LEVN	4	LAMPADA SEGNALAZIONE APERTURA [EVN]	INDICATOR LIGHT FOR OPENING OF ELECTRO-VALVE [EVN]
	LF	4	LAMPADA SEGNALAZIONE BASSA FIAMMA BRUCIATORE	BURNER IN LOW FLAME INDICATOR LIGHT

(x)
INSTALLATO SOLO SU ALCUNE VERSIONI
INSTALLED ON ANY VERSIONS ONLY

	Sigla/Item	Foglio/Sheet	Funzione	Function
	LRPB	3	LAMPADA SEGNALAZIONE FUNZIONAMENTO PRERISCALDATORE [RPB]	INDICATOR LIGHT FOR PRE-HEATING RESISTOR [RPB] OPERATION
	LS	3	LAMPADA SEGNALAZIONE SOSTA BRUCIATORE	INDICATOR LIGHT FOR BURNER STAND-BY
	LT	3	LAMPADA SEGNALAZIONE BLOCCO TERMICO	INDICATOR LIGHT FOR MOTOR OVERLOAD THERMAL CUTOUT
	LTA	4	LAMPADA SEGNALAZIONE TRASFORMATORE DI ACCENSIONE	IGNITION TRANSFORMER INDICATOR LIGHT
	LTP	3	LAMPADA SEGNALAZIONE BLOCCO TERMICO MOTORE POMPA	INDICATOR LIGHT FOR PUMP MOTOR OVERLOAD THERMAL CUTOUT
	LTRSB	3	LAMPADA SEGNALAZIONE BLOCCO TERMOSTATO DI SICUREZZA [TRSB]	INDICATOR LIGHT FOR [TRSB] SAFETY THERMOSTAT
	MCX06C	2	REGOLATORE TEMPERATURE NAFTA	OIL TEMPERATURE REGULATOR
	MP	1	MOTORE POMPA NAFTA	OIL PUMP MOTOR
	MV	1	MOTORE VENTILATORE	FAN MOTOR
	PA	3	PRESSOSTATO ARIA	AIR PRESSURE SWITCH
	PS	3	PULSANTE SBLOCCO FIAMMA	FLAME UNLOCK BUTTON
	PT100	6	SONDA DI TEMPERATURA	TEMPERATURE PROBE
(x)	RA	1	RESISTENZE AUSILIARIE	AUXILIARY HEATERS
	RP	1	RESISTENZE PRERISCALDATORE NAFTA	PRE-HEATING TANK RESISTORS
	RWF50.2x	5	REGOLATORE MODULANTE	BURNER MODULATOR
	RWF55.5x	5	REGOLATORE MODULANTE (ALTERNATIVO)	BURNER MODULATOR (ALTERNATIVE)
	S-EXIT	2	SONDA TEMPERATURA USCITA BARILOTTO	TANK OUTLET OIL TEMPERATURE PROBE
(x)	S-TCI	2	SONDA TEMPERATURA CONSENSO IMPIANTO	PLANT CONSENT TEMPERATURE PROBE
	S-TCN	2	SONDA TEMPERATURA CONSENSO NAFTA	OIL CONSENT TEMPERATURE PROBE
	S-TR	2	SONDA TEMPERATURA RESISTENZE	RESISTOR TEMPERATURE PROBE
	SD-PRESS	6	SONDA DI PRESSIONE	PRESSURE PROBE
	SD-TEMP.	6	SONDA DI TEMPERATURA	TEMPERATURE PROBE
	SD - 0÷10V	6	TRASDUTTORE USCITA IN TENSIONE	TRANSDUCER VOLTAGE OUTPUT
	SD - 4÷20mA	6	TRASDUTTORE USCITA IN CORRENTE	TRANSDUCER CURRENT OUTPUT
	SQL33.03	4	SERVOCOMANDO SERRANDA ARIA	AIR DAMPER ACTUATOR
	ST	3	SERIE TERMOSTATI/PRESSOSTATI	SERIES OF THERMOSTATS OR PRESSURE SWITCHES
	TA	4	TRASFORMATORE DI ACCENSIONE	IGNITION TRANSFORMER
	TC	6	TERMOCOPPIA	THERMOCOUPLE
	TP	1	TERMICO MOTORE POMPA	PUMP MOTOR THERMAL
	TRAFO	2	TRASFORMATORE AUSILIARIO	AUXILIARY TRANSFORMER
	TV	1	TERMICO MOTORE VENTILATORE	FAN MOTOR THERMAL
	WB1	1	BARRA DI TERRA	EARTH TERMINAL
	[SQM40.265A]	4	SERVOCOMANDO SERRANDA ARIA (ALTERNATIVO)	AIR DAMPER ACTUATOR (ALTERNATIVE)

(x)
INSTALLATO SOLO SU ALCUNE VERSIONI
INSTALLED ON ANY VERSIONS ONLY