CIB UNIGAS

Let's light up tomorrow

CATALOGUE

Medium-large
burners
from 480 kW to 80 MW

2020

www.cibunigas.it

CIB UNIGAS

Let's light up tomorrow

CATALOGUE

Medium-large
burners
from 480 kW to 80 MW

2020

www.cibunigas.it

CIB UNIGAS
Let's light up tomorrow

WE UNDERSTAND YOUR MARKET

The success of CIB UNIGAS product, actually exported globally, is due to its adaptability. In fact we are able to adapt our know-how to the different market requests. As a demonstration of the described ability, now the 85% of our turnover comes from exports, in particular form Russia and China.

Our strategic points are the adaptation to different rules, the specific technical and promotional documentations we supply, the ability to fulfill special requirements and the constant participation at international exhibitions.

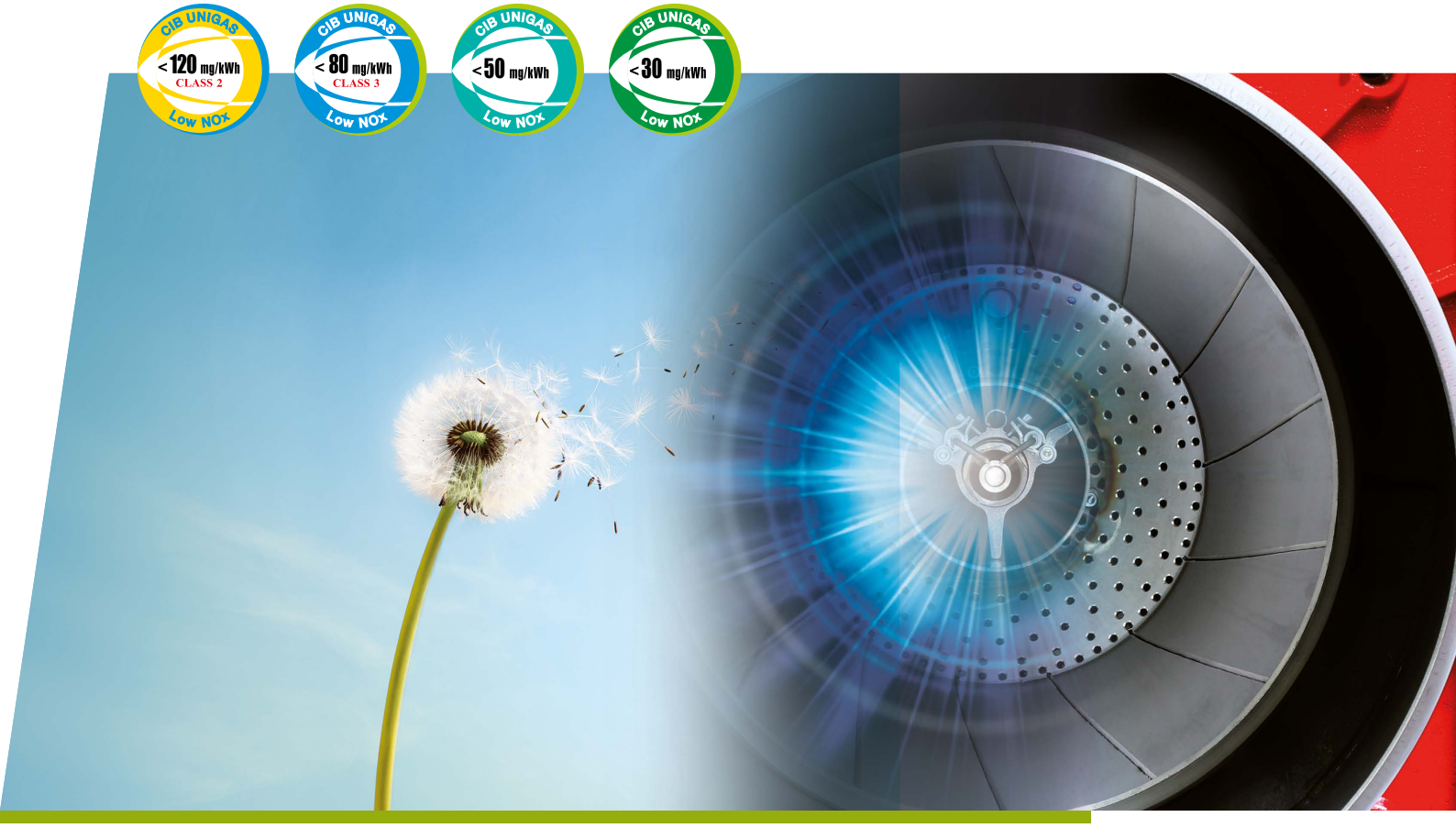

QUALITY STANDARDS AND CIB UNIGAS: OUR COMMITMENT

In 1995 CIB UNIGAS was certificated by the TUV, a German institute that certifies the safety and the rule-compliance of products. From that time on, the company adhere to high quality standards in all its industrial processes.

ADVANCING TOWARDS THE FUTURE

One of the goals of CIB UNIGAS was to strengthen the internal distribution of information and to create a new technical structure for the research and development of new industrial products.

In the new and modern facility, is assembled the nerve centre of the company: General Management, commercial offices, control and research labs and production workshops.

The qualifications of our technicians and the investment in research and human resources, represent the living and continuous engagement to operate in a future assuring stability and dynamism to the company.

www.cibunigas.it

Innovation gets us there first

Nowadays the adaptation to the emission standards is no more sufficient to obstruct the increase of the greenhouse effect. For this reason all our products have always guaranteed levels of pollutant emissions decisively below the sector limit imposed by the international regulations. Thanks to its "Zero Emission NOx" research project, CIB Unigas is playing a proactive role in the discovery of new technologies in order to create the most environmentally-friendly product possible.

Production philosophy

Everything begins in our research laboratories, where a group of engineers is free to test new materials and technologies with the aim of discover burners always more efficient and environmentally-friendly. When a prototype is ready, it is underwent to several trials based on parameters that are stricter than the ones required by the market.

This is the way we produce our products that are appropriate both for industrial and private applications. CIB Unigas's production method, based on excellence and constant updating, does not prevent it from maintaining a formidable operation agility. In fact CIB Unigas is able to offer an infinite range of tailored solutions that are surprisingly competitive in terms of costs and time.

www.thesmartcombustion.com

THE FIRST BURNER WITH SELF CONTROL

The ***FACILE*** project stems from the vision of creating an easy commissioning burner, and, at the same time, making it more efficient in terms of energy consumption. From the beginning, the goal was to observe the "machine" from a different point of view, away from the classic design stereotypes of the burner, and developing a new conception. The burner is no longer seen as a passive device but, on the contrary, interactive and autonomous in relation to the environmental variables and plant conditions.

FACILE®

Full Auto Control Innovative Line Engineering

BURNER IDENTIFICATION FOR TYPE AND MODELS

SERIES
NOVANTA CINQUECENTO MILLE DUEMILA

TYPE
R…, RX…, PG…, RG…, N…, PN…, RN…, PBY…,
HR…, HRX…, KP…, KR…, TP…, TLX…, TG…, TN…,
TPBY…, HTP…, KTP…, URB

Model: M- . AB . S . IT. A . 1. 65 . xx

FUEL

M - NATURAL GAS
L - L.P.G.
B - BIOGAS
C - TOWN GAS
G - LIGHT OIL
A - BIO DIESEL
K - KEROSENE

N - HEAVY OIL UP TO 50 cSt at 50°C (7°E - 50°C)
E - HEAVY OIL UP TO 110 cSt at 50°C (15°E - 50°C)
D - HEAVY OIL UP TO 400 cSt at 50°C (50°E - 50°C)
H - HEAVY OIL UP TO 4000 cSt at 50°C (530°E - 50°C)
MG - DUAL FUEL BURNERS NATURAL GAS - LIGHT OIL
MN - DUAL FUEL BURNERS NATURAL GAS - HEAVY OIL

OPERATION

AB - HIGH-LOW FLAME
PR - PROGRESSIVE
MD - FULLY MODULATING

BLAST TUBE

S - STANDARD
L - LONG

DESTINATION COUNTRY

GB UNITED KINGDOM
... AVAILABLE FOR OTHER COUNTRIES UPON REQUES

BURNER MANUFACTURE

A STANDARD
Y SPECIAL
G CONTROL PANEL AND JUNCTION BOX
E JUNCTION BOX

EQUIPMENT

1 2 GAS VALVES + LEAKAGE CONTROL
8 2 GAS VALVES + LEAKAGE CONTROL AND MAXIMUM GAS PRESSURE SWITCH

GAS CONNECTION

50 DN50
65 DN65
80 DN80
100 DN100
125 DN125

ELECTRONIC VERSION

EA Medium-large burners complete with electronic cam
EB Medium-large burners complete with electronic cam and inverter
EC Medium-large dual fuel burners complete with electronic cam
ED Medium-large dual fuel burners complete with electronic cam and inverter
ES Medium-large burners complete with electronic cam, without O_2 control, without Inverter.
EO Medium-large burners complete with electronic cam and O_2 control, without Inverter
EI Medium-large burners complete with electronic cam and Inverter, without O_2 control
EK Medium-large burners complete with electronic cam with O_2 control and with Inverter

BURNER IDENTIFICATION FOR TYPE AND NEW MODELS

SERIES
NOVANTA CINQUECENTO MILLE

TYPE
G..., H..., K..., N...

Model: A. M- . AB . SR . IT. A . 1. 65 . xx

A - STANDARD
X - LOW NOX
P - PREMIXED
Y - PNEUMATIC

FUEL

M - NATURAL GAS
L - L.P.G.
B - BIOGAS
C - TOWN GAS
G - LIGHT OIL
A - BIO DIESEL
K - KEROSENE
N - HEAVY OIL UP TO 50 cSt a 50°C (7°E - 50°C)
E - HEAVY OIL UP TO 110 cSt a 50°C (15°E - 50°C)
D - HEAVY OIL UP TO 400 cSt a 50°C (50°E a 50°C)
H - HEAVY OIL UP TO 4000 cSt a 50°C (530°E - 50°C)
MG - DUAL FUEL BURNERS NATURAL GAS - LIGHT OIL
MN - DUAL FUEL BURNERS NATURAL GAS - HEAVY OIL

OPERATION

AB - HIGH-LOW FLAME
PR - PROGRESSIVE
MD - FULLY MODULATING

BLAST TUBE AND AIR INLET

SR - STANDARD BLAST TUBE WITH SILENCER
LR - LONG BLAST TUBE WITH SILENCER

DESTINATION COUNTRY

GB UNITED KINGDOM
... AVAILABLE FOR OTHER COUNTRIES UPON REQUES

BURNER MANUFACTURE

A STANDARD
Y SPECIAL
G CONTROL PANEL AND JUNCTION BOX
E JUNCTION BOX

EQUIPMENT

1 2 GAS VALVES + LEAKAGE CONTROL
8 2 GAS VALVES + LEAKAGE CONTROL AND MAXIMUM GAS PRESSURE SWITCH

GAS CONNECTION

50 DN50
65 DN65
80 DN80
100 DN100
125 DN125

ELECTRONIC VERSION

EA Medium-large burners complete with electronic cam
EB Medium-large burners complete with electronic cam and inverter
EC Medium-large dual fuel burners complete with electronic cam
ED Medium-large dual fuel burners complete with electronic cam and inverter
ES Medium-large burners complete with electronic cam, without O_2 control, without Inverter.
EO Medium-large burners complete with electronic cam and O_2 control, without Inverter
EI Medium-large burners complete with electronic cam and Inverter, without O_2 control
EK Medium-large burners complete with electronic cam with O_2 control and with Inverter

EXAMPLE OF THE NEW RANGE CONFIGURATION

CIB UNIGAS® BURNERS

CIB UNIGAS S.P.A.

Via L.Galvani, 9 35011
Campodarsego (PD) ITALIA

CE 0476

Type	K750X
Model	M-.MD.SR.GB.A.1.100.EA
Year	2019
S. Number	1992223
El. Supply	400V 3N a.c. 50Hz
El.Consump.	15,50 kW
Fan Motor	15,0 kW
Protection	IP40
Output	1100 -7500 kW
Fuel	NATURAL GAS
Category	I2H
Gas pressure	Max 500 mbar
Destination	UNITED KINGDOM
P.I.N.	0476CQ0750

TYPE	MODEL
K 750 X	**M-. MD. SR. GB. A. 1. 100. EA**

- K — Model
- 750 — Output
- X — Low NO_x firing head
- M- — Natural gas
- MD — Fully modulating
- SR — Short blast tube with air inlet silencer
- GB — Country United Kingdom
- A — Standard
- 1 — 2 gas valves and leakage control
- 100 — Gas connection
- EA — Electronic version

CIB UNIGAS® BURNERS

CIB UNIGAS S.P.A.

Via L.Galvani, 9 35011
Campodarsego (PD) ITALIA

CE

Type	N1060X
Model	MG.MD.SR.GB.A.1.100.EC
Year	2019
S. Number	1993330
Output	1550 - 10600 kW
Fuel	GAS/LIGHT OIL
Category	I2H
Gas pressur	Max 500 mbar
Viscosity	2,0-7,4 cSt at 40°C
El. Supply	400V 3N a.c. 50Hz
El.Consump.	34,50 kW
Fan Motor	30,00 kW
Protection	IP40
Destination	UNITED KINGDOM
	-
P.I.N.	

TYPE	MODEL
N 1060 X	**MG. MD. SR. GB. A. 1. 100. EC**

- N — Model
- 1060 — Output
- X — Low NO_x firing head
- MG — Natural gas Light oil
- MD — Fully modulating
- SR — Short blast tube with air inlet silencer
- GB — Country United Kingdom
- A — Standard
- 1 — 2 gas valves and leakage control
- 100 — Gas connection
- EC — Electronic version

INDEX

ELECTRONIC BURNERS

		Page
	MICRO PROCESSOR CONTROLLED BURNERS	19

NATURAL GAS LOW NOx (Class 2 EN676)

	Type	Output kW	Operation	Page
	NOVANTA SERIES R91A - R92A - R93A	480÷4.100	PR MD	46
	NOVANTA SERIES G290A...SR - G310A...SR	440÷3.000	PR MD	51
	CINQUECENTO SERIES H455A...SR - H630A...SR - H685A...SR	700÷6.850	PR MD	55
	CINQUECENTO SERIES R512A - R515A - R520A - R525A	600÷8.000	PR MD	60
	CINQUECENTO SERIES K750A...SR - K890A...SR - K990A...SR	880÷9.900	PR MD	65
	MILLE SERIES R1025 - R1030 - R1040	2.550÷13.000	PR MD	70
	MILLE SERIES N1060A...SR - N1300A...SR	1.200÷13.000	PR MD	74
	DUEMILA SERIES R2050 - R2060 - R2080	2.500÷19.000	PR MD	78
	NOVANTA - MILLE SERIES FG...A - FH...A - FK...A	2.000÷10.000	MD	Contact our Sales Offices

NATURAL GAS LOW NOx (Class 3 EN676)

	Type	Output kW	Operation	Page
	NOVANTA SERIES RX92R - RX92.1	350÷3.100	PR MD	88
	NOVANTA SERIES G215X...xR - G250X...xR - G300X...xR	350÷3.000	PR MD	92
	CINQUECENTO SERIES H365X...xR - H440X...xR - H500X...xR	650÷5.250	PR MD	97
	CINQUECENTO SERIES K590X...xR - K750X...xR	670÷7.500	PR MD	102
	MILLE SERIES N880X...xR - N925X...xR - N1060X...xR	1.500÷10.600	PR MD	106
	DUEMILA SERIES RX2050R - RX2050 - RX2060 - RX2080	1.780÷19.000	PR MD	110

EMISSIONS NOx < 50 mg/kWh

	Type	Output kW	Operation	Page
	NOVANTA - DUEMILA SERIES RX...FGR... - G...FGR... - H...FGR... K...FGR... - N...FGR...	3.000÷17.100	PR MD	Contact our Sales Offices
	FGR... with air inlet silencer			Contact our Sales Offices

EMISSIONS NOx < 30 mg/kWh

	Type	Output kW	Operation	Page
	NOVANTA - DUEMILA SERIES RX...FGR... - G...FGR... - H...FGR... K...FGR... - N...FGR...	3.000÷15.200	PR MD	Contact our Sales Offices
	FGR... with air inlet silencer			Contact our Sales Offices

EMISSIONS NOx < 80 - 50 - 30 mg/kWh

	Type	Output kW	Operation	Page
	NOVANTA - MILLE SERIES FG...X - FH...X - FK...X	2.000÷10.000	MD	Contact our Sales Offices
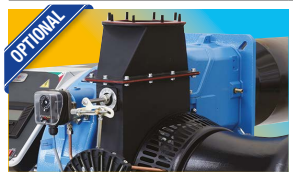	**FGR... with air inlet silencer**			Contact our Sales Offices

GAS TRAINS

		Page
		116

LIGHT OIL BURNERS

	Type	Output kW	Operation	Page
	NOVANTA SERIES RG91 - RG92 - RG93	1.047÷4100	AB PR MD	120
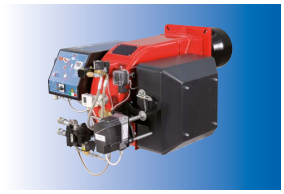	**CINQUECENTO SERIES** RG510 - RG515 - RG520 - RG525	1.314÷8.000	PR MD	124
	MILLE SERIES RG1030 - RG1040	2.550÷13.000	PR MD	128
	DUEMILA SERIES RG2050 - RG2060 - RG2080	2.500÷19.000	PR MD	131

INDEX

HEAVY OIL BURNERS

	Type	Output kW	Operation	Page
	NOVANTA SERIES **Mechanical atomization** PN91 - PN92 - PN93	1.047÷4.100	PR MD	138
	CINQUECENTO SERIES **Mechanical atomization** RN510 - RN515 - RN520 - RN525	1.314÷8.000	PR MD	142
	MILLE SERIES **Mechanical atomization** RN1030 - RN1040	2.550÷13.000	PR MD	146
	DUEMILA SERIES **Mechanical atomization** RN2050 - RN2060 - RN2080	2.500÷19.000	PR MD	150
	NOVANTA SERIES **Pneumatic atomization** PBY90 - PBY91 - PBY92 - PBY93	290÷3.700	PR MD	155
	CINQUECENTO SERIES **Pneumatic atomization** RBY510 - RBY515 - RBY520 - RBY525	1.100÷7.300	PR MD	158
	MILLE SERIES **Pneumatic atomization** RBY1025 - RBY1030 - RBY1040	2.550÷13.000	PR MD	161
	DUEMILA SERIES **Pneumatic atomization** RBY2050 - RBY2060 - RBY2080	2.500÷19.000	PR MD	164

DUAL FUEL BURNERS NATURAL GAS/LIGHT OIL LOW NOx (Class 2 EN676)

	Type	Output kW	Operation	Page
	NOVANTA SERIES HR91A - HR92A - HR93A	480÷4.100	PR MD	170
	NOVANTA SERIES G290A...SR - G310A...SR	440÷3.100	PR MD	174
	CINQUECENTO SERIES H455A...SR - H630A...SR - H685A...SR	700÷6.850	PR MD	178
	CINQUECENTO SERIES HR512A - HR515A - HR520A - HR525A	600÷8.000	PR MD	183
	CINQUECENTO SERIES K750A...SR - K890A...SR - K990A...SR	880÷9.900	PR MD	188
	MILLE SERIES HR1025 - HR1030 - HR1040	2.550÷13.000	PR MD	193
	MILLE SERIES N1060A...SR - N1300A...SR	1200÷13.000	PR MD	198
	DUEMILA SERIES HR2050 - HR2060 - HR2080	2.500÷19.000	PR MD	202

INDEX

BRUCIATORI MISTI GAS/GASOLIO A BASSO NOx (Classe 3 EN676)

	Type	Output kW	Operation	Page
	NOVANTA SERIES HRX92R - HRX92.1	674÷3130	PR MD	210
	NOVANTA SERIES G215X...xR - G250X...xR - G300X...xR	350÷3.000	PR MD	214
	CINQUECENTO SERIES H365X...xR - H440X...xR - H500X...xR	650÷5.250	PR MD	219
	CINQUECENTO SERIES K590X...xR - K750X...xR	670÷7.500	PR MD	224
	MILLE SERIES N880X...xR - N925X...xR - N1060X...xR	1.500÷10.600	PR MD	228
	DUEMILA SERIES HRX2050R - HRX2050 - HRX2060 - HRX2080	1.780÷19.000	PR MD	232

EMISSIONS NOx < 50 mg/kWh

	Type	Output kW	Operation	Page
	NOVANTA - DUEMILA SERIES RX...FGR... - G...FGR... - H...FGR... K...FGR... - N...FGR...	3.000÷17.100	PR MD	Contact our Sales Offices
	FGR... with air inlet silencer			Contact our Sales Offices

EMISSIONS NOx < 30 mg/kWh

	Type	Output kW	Operation	Page
	NOVANTA - DUEMILA SERIES RX...FGR... - G...FGR... - H...FGR... K...FGR... - N...FGR...	3.000÷15.200	PR MD	Contact our Sales Offices
	FGR... with air inlet silencer			Contact our Sales Offices

INDEX

DUAL FUEL BURNERS NATURAL GAS/HEAVY OIL

	Type	Output kW	Operation	Page
	NOVANTA SERIES **Mechanical atomization** KP91 - KP92 - KP93	480÷4.100	PR MD	240
	CINQUECENTO SERIES **Mechanical atomization** KR512 - KR515 - KR520 - KR525	600÷8.000	PR MD	245
	MILLE SERIES **Mechanical atomization** KR1025 - KR1030 - KR1040	2.550÷13.000	PR MD	253
	DUEMILA SERIES **Mechanical atomization** KR2050 - KR2060 - KR2080	2.500÷19.000	PR MD	258
	NOVANTA SERIES **Pneumatic atomization** KPBY91 - KPBY92	480÷4.100	PR MD	263
	CINQUECENTO SERIES **Pneumatic atomization** KRBY512 - KRBY515 KRBY520 - KRBY525	600÷8.000	PR MD	267
	MILLE SERIES **Pneumatic atomization** KRBY1025 - KRBY1030 - KRBY1040	2.550÷13.000	PR MD	271
	DUEMILA SERIES **Pneumatic atomization** KRBY2050 - KRBY2060 - KRBY2080	2.500÷19.000	PR MD	275

BURNERS FOR INDUSTRIAL APPLICATIONS

	Type	Output kW	Operation	Page
	TECNOPRESS SERIES	300÷2.050	PR MD	282
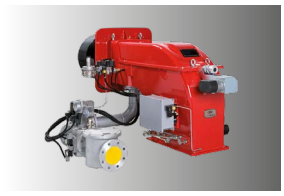	**NOVANTA SERIES**	264÷4.100	PR MD	282
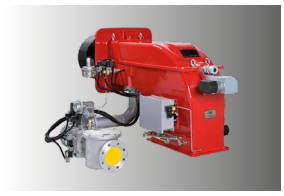	**CINQUECENTO SERIES**	600÷7.950	PR MD	282
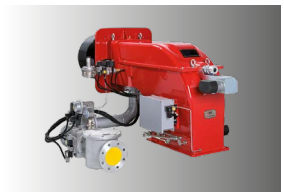	**MILLE SERIES**	2.500÷19.000	PR MD	282
	DUEMILA SERIES	3.600÷27.000	PR MD	282
	TREMILA SERIES	5.500÷39.000	PR MD	282
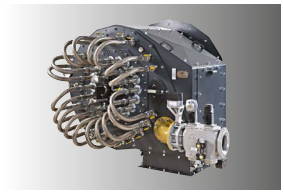	**URB SERIES**	1.167÷80.000	PR MD	288

INDEX

FITTINGS / OPTIONS

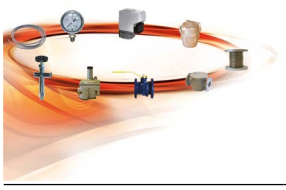

	Page
OPTIONS BURNER	289
GENERAL OPTIONS BURNERS	290
OPTIONS GAS BURNERS	292
OPTIONS LIGHT OIL BURNERS	294
OPTIONS HEAVY OIL BURNERS	295

TECHNICAL INFORMATIONS

	Page
FLAME CONTROL UNITS, SIGNALS AND FUNCTIONS	302
ADJUSTMENT OF THE BURNERS	304
HOW TO CHOOSE A BURNER	308
LOW PRESSURE OIL HANDLING UNITS WITH SERVICE TANK	309
VARIABLE SPEED DRIVE FOR ELECTRONICALLY CONTROLLED BURNERS	310
EMISSIONS	312
LOW NO_x BURNERS - TECHNICAL NOTES	314
WHY CHOOSE CIB UNIGAS	315
MATCHING LOW NO_x BURNER AND HEAT GENERATOR	316
SULFUR OXIDES EMISSIONS	320
ACOUSTIC HOODS BOX ASSEMBLED ON WHEELED FRAME	321

MICRO PROCESSOR CONTROLLED BURNERS

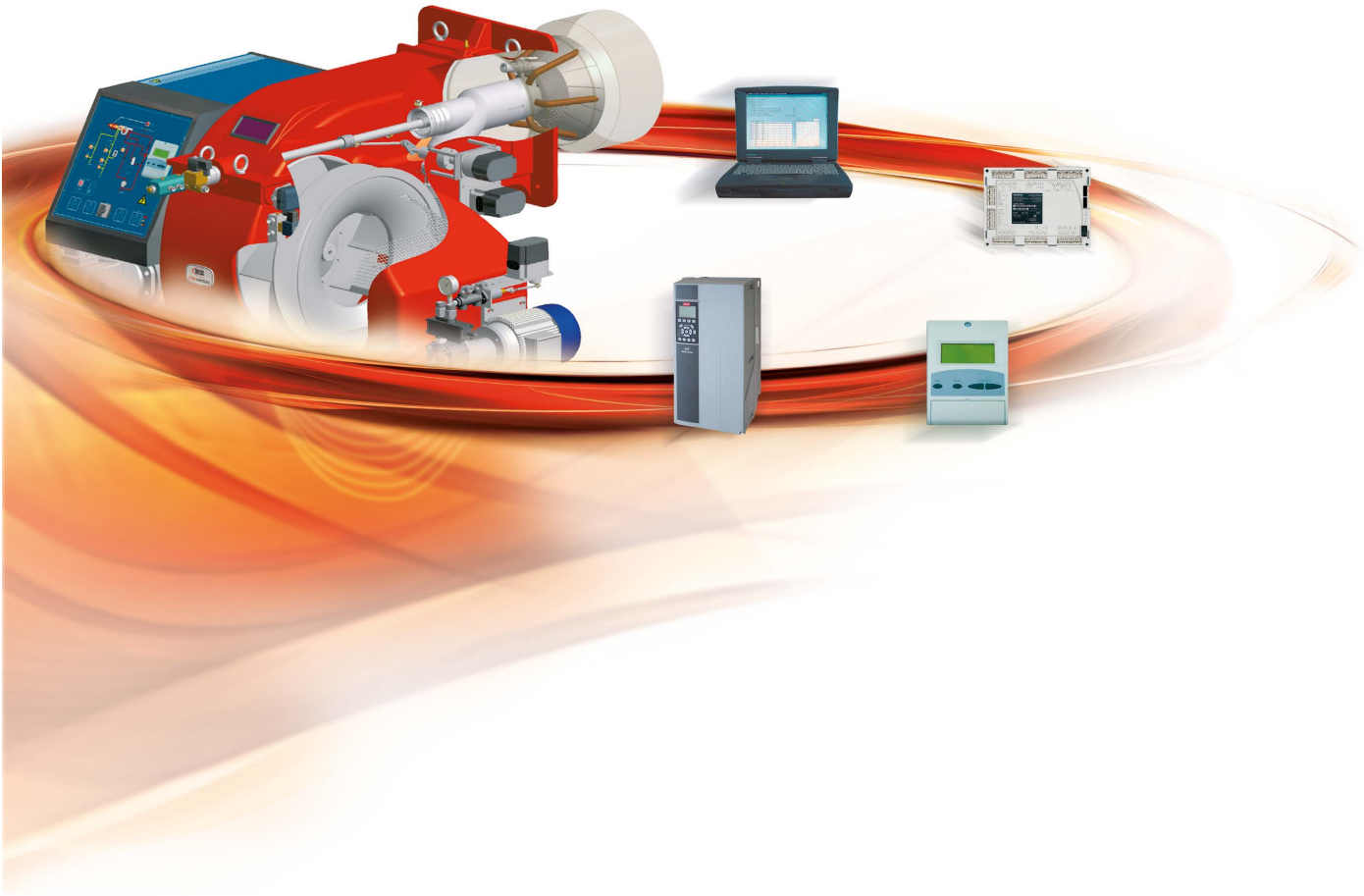

WITH LMV 2... MICRO PROCESSOR

EA Medium-large burners complete with electronic cam

EB Medium-large burners complete with electronic cam and inverter

EC Medium-large dual fuel burners complete with electronic cam

ED Medium-large dual fuel burners complete with electronic cam and inverter

WITH LMV 5... MICRO PROCESSOR

ES Medium-large burners complete with electronic cam, without O_2 control, without Inverter

EO Medium-large burners complete with electronic cam and O_2 control, without Inverter

EI Medium-large burners complete with electronic cam and Inverter, without O_2 control

EK Medium-large burners complete with electronic cam, Inverter and O_2 control

WITH LMV 2... 3... MICROPROCESSOR
for medium-large burners

CIB UNIGAS S.p.A. can provide medium size burners (up to 15.200 kW), with an electronic control system.
It can be used both on single fuel burners (gas or light oil) and on dual fuel burners (gas/light oil).

This system offers many features:

- Reduction of mechanical moving parts
- Built-in flame detection box
- Integrated gas proving system
- Possibility to install different types of flame sensors, in order to use the electronic cam system on all applications
- Variable speed drive VSD (only on certain versions)
- Error-code display on screen in case of lock-out
- Possibility to program or to exclude the post purge time
- Display mode of operating hours

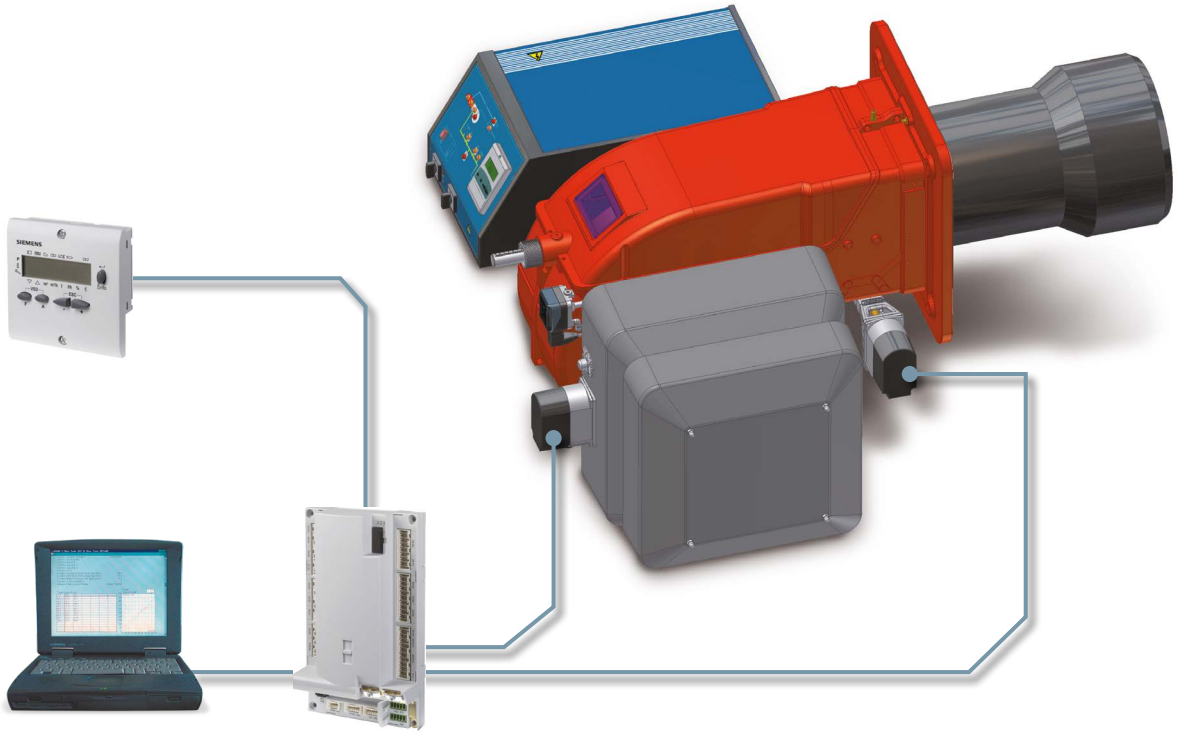

Modbus communication, system, only upon request, through the software (to be quoted separately), except the base version.

Optimal air/fuel ratio regulation, with high precision and repeatability of the regulations made.

Easy programming, both through the AZL programmer, and the proper software.

WITH LMV 2... 3... MICROPROCESSOR
for medium-large burners

Model	Series	Fuel	LMV 20	LMV 26	LMV 27	LMV 37	AGM60
EA	NOVANTA CINQUECENTO	gas	●				
EA	MILLE DUEMILA	gas			●		
EA	NOVANTA CINQUECENTO	liquid fuel	●				
EA	MILLE DUEMILA	liquid fuel			●		
EB	NOVANTA CINQUECENTO	gas				●	
EB	MILLE DUEMILA	gas				●	
EB	NOVANTA CINQUECENTO	liquid fuel				●	
EB	MILLE DUEMILA	liquid fuel				●	
EC	NOVANTA CINQUECENTO	dual fuel burners HR-KP		●			
EC	MILLE	dual fuel burners N		●			
EC	MILLE DUEMILA	dual fuel burners HR-KR		●			●
EC	NOVANTA CINQUECENTO	dual fuel burners KRBY		●			●
EC	MILLE DUEMILA	dual fuel burners KRBY		●			●
ED	NOVANTA CINQUECENTO	dual fuel burners HR-KR		●			
ED	MILLE	dual fuel burners N		●			
ED	MILLE DUEMILA	dual fuel burners HR-KR		●			●
ED	NOVANTA CINQUECENTO	dual fuel burners KRBY		●			●
ED	MILLE DUEMILA	dual fuel burners KRBY		●			●

● = SQM33.711A9

	AZL 23	SQM33 air	SQM33 gas	SQM33 liquid fuel	INVERTER
	●	●	●		
	●	●	●		
	●	●		●	
	●	●		●	
	●	●	●		●
	●	●	●		●
	●	●		●	●
	●	●		●	●
	●	●	●		
	●	●	●		
	●	●	●	●	
	●	●	●	●	
	●	●	●	●	
	●	●	●		●
	●	●	●		●
	●	●	●	●	●
	●	●	●	●	●
	●	●	●	●	●

GAS WITH LMV 20...
Electronically Operated without Inverter
complete with leakage control

Version EA (Novanta, Cinquecento)

LMV20...

AZL 23

Servomotor
AIR SQM33...

Servomotor
GAS SQM33...

Series	Burner Type	Extra charge €
GAS	R91A... 1.50/65/80/100 ...EA R92A... 1.50/65/80/100 ...EA R93A... 1.50/65/80/100 ...EA	
GAS	RX92R... 1.50/65/80/100 ...EA RX92.1... 1.50/65/80/100 ...EA	
GAS	G290A... 1.50/65/80/100 ...EA G310A... 1.50/65/80/100 ...EA	
GAS	G215X... 1.50/65/80/100 ...EA G250X... 1.50/65/80/100 ...EA G300X... 1.50/65/80/100 ...EA	
GAS	H455A... 1.50/65/80/100 ...EA H630A... 1.50/65/80/100 ...EA H685A... 1.50/65/80/100 ...EA	
GAS	H365X... 1.50/65/80/100 ...EA H440X... 1.50/65/80/100 ...EA H500X... 1.50/65/80/100 ...EA	
GAS	R512A... 1.50/65/80/100 ...EA R515A... 1.50/65/80/100 ...EA R520A... 1.50/65/80/100 ...EA R525A... 1.65/80/100 ...EA	
GAS	K750A... 1.65/80/100/125 ...EA* K890A... 1.65/80/100/125 ...EA* K990A... 1.80/100/125 ...EA*	
GAS	K590X...1.65/80/100/125 ...EA* K750X...1.65/80/100/125 ...EA*	

** Servomotor air SQM33.711A9*

Version EA (Mille, Duemila)

LMV 27...

AZL 23

Servomotor
AIR SQM33...

Servomotor
GAS SQM33...

Series	Burner Type	Extra charge €
GAS	R1025... 1.65/80/100/125 ...EA* R1030... 1.65/80/100/125 ...EA* R1040... 1.65/80/100/125 ...EA*	
GAS	N1060A... 1.80/100/125 ...EA* N1300A... 1.80/100/125 ...EA*	
GAS	N880X...1.80/100/125 ...EA* N925X...1.80/100/125 ...EA* N1060X...1.80/100/125 ...EA*	
GAS	R2050... 1.80/100/125 ...EA*	
GAS	RX2050R... 1.80/100/125 ...EA* RX2050... 1.80/100/125 ...EA*	

** Servomotor air SQM33.711A9*

GAS WITH LMV 37...
Electronically Operated with Inverter

Version EB (Novanta, Cinquecento, Mille, Duemila)

LMV37...

AZL 23

Servomotor
AIR SQM33...

Servomotor
GAS SQM33...

Inverter

Series	Burner Type	Extra charge €
GAS	R91A... 1.50/65/80/100 ...EB R92A... 1.50/65/80/100 ...EB R93A... 1.50/65/80/100 ...EB	
GAS	RX92R... 1.50/65/80/100 ...EB RX92.1... 1.50/65/80/100 ...EB	
GAS	G290A... 1.50/65/80/100 ...EB G310A... 1.50/65/80/100 ...EB	
GAS	G215X... 1.50/65/80/100 ...EB G250X... 1.50/65/80/100 ...EB G300X... 1.50/65/80/100 ...EB	
GAS	H455A... 1.50/65/80/100 ...EB H630A... 1.50/65/80/100 ...EB H685A... 1.50/65/80/100 ...EB	
GAS	H365X... 1.50/65/80/100 ...EB H440X... 1.50/65/80/100 ...EB H500X... 1.50/65/80/100 ...EB	
GAS	R512A... 1.50/65/80/100 ...EB R515A... 1.50/65/80/100 ...EB R520A... 1.50/65/80/100 ...EB R525A... 1.65/80/100 ...EB	
GAS	K750A... 1.65/80/100/125 ...EB* K890A... 1.65/80/100/125 ...EB* K990A... 1.80/100/125 ...EB*	
GAS	K590X... 1.65/80/100/125 ...EB* K750X... 1.65/80/100/125 ...EB*	
GAS	R1025... 1.65/80/100/125 ...EB* R1030... 1.65/80/100/125 ...EB* R1040... 1.65/80/100/125 ...EB*	
GAS	N1060A... 1.80/100/125 ...EB* N1300A... 1.80/100/125 ...EB*	
GAS	N880X...1.80/100/125 ...EB* N925X...1.80/100/125 ...EB* N1060X...1.80/100/125 ...EB*	
GAS	R2050... 1.80/100/125 ...EB*	
GAS	RX2050R... 1.80/100/125 ...EB* RX2050... 1.80/100/125 ...EB*	

** Servomotor air SQM33.711A9*

LIGHT OIL AND HEAVY OIL BURNERS WITH LMV 20...
Electronically Operated without Inverter

Version EA (Novanta, Cinquecento, Mille, Duemila)

LMV20...

AZL 23

Servomotor
AIR SQM33...

Servomotor
LIGHT OIL-HEAVY OIL
SQM33...

Series	Burner Type	Extra charge €
LIGHT OIL	RG91 - RG92 - RG93 ...EA	
LIGHT OIL	RG510 - RG515 - RG520 - RG525 ...EA	
LIGHT OIL	RG1030 - RG1040 ...EA*	
LIGHT OIL	RG2050 ...EA*	
HEAVY OIL	PBY90 - PBY91 - PBY92 - PBY93 ...EA	
HEAVY OIL	RBY510 - RBY515 - RBY520 - RBY525 ...EA	
HEAVY OIL	RBY1025 - RBY1030 - RBY1040 ...EA*	
HEAVY OIL	RBY2050 ...EA*	

** Servomotor SQM33.711A9 for air, light oil and heavy oil*

LIGHT OIL BURNERS WITH LMV 26...
Electronically Operated with Inverter

Version EB (Novanta, Cinquecento, Mille, Duemila)

LMV 26...

AZL 23

Servomotor
AIR SQM33...

Servomotor
LIGHT OIL SQM33...

Inverter

Series	Burner Type	Extra charge €
LIGHT OIL	RG91 - RG92 - RG93 ...EB	
LIGHT OIL	RG510 - RG515 - RG520 - RG525 ...EB	
LIGHT OIL	RG1030 - RG1040 ...EB*	
LIGHT OIL	RG2050 ...EB*	

** Servomotor air and light oil SQM33.711A9*

DUAL FUEL BURNERS NATURAL GAS/LIGHT OIL NATURAL GAS/HEAVY OIL WITH LMV 26...
Electronically Operated without Inverter
complete with leakage control

Version EC (Novanta, Cinquecento, Mille, Duemila)

LMV 26...

AZL 23

Servomotor
AIR SQM33...

Servomotor
GAS
LIGHT OIL-HEAVY OIL
SQM33...

***Servomotor
HEAVY OIL
SQM33...

Series	Burner Type	Extra charge €
DUAL FUEL GAS/LIGHT OIL	HR91A... 1.50/65/80/100 ...EC HR92A... 1.50/65/80/100 ...EC HR93A... 1.50/65/80/100 ...EC	
DUAL FUEL GAS/LIGHT OIL	HRX92R...1.50/65/80/100 ...EC HRX92.1...1.50/65/80/100 ...EC	
DUAL FUEL GAS/LIGHT OIL	G290A... 1.50/65/80/100 ...EC G310A... 1.50/65/80/100 ...EC	
DUAL FUEL GAS/LIGHT OIL	G215X... 1.50/65/80/100 ...EC G250X... 1.50/65/80/100 ...EC G300X... 1.50/65/80/100 ...EC	
DUAL FUEL GAS/LIGHT OIL	H455A... 1.50/65/80/100 ...EC H630A... 1.50/65/80/100 ...EC H685A... 1.50/65/80/100 ...EC	
DUAL FUEL GAS/LIGHT OIL	H365X... 1.50/65/80/100 ...EC H440X... 1.50/65/80/100 ...EC H500X... 1.50/65/80/100 ...EC	
DUAL FUEL GAS/LIGHT OIL	HR512A... 1.50/65/80/100 ...EC HR515A... 1.50/65/80/100 ...EC HR520A... 1.50/65/80/100 ...EC HR525A... 1.65/80/100 ...EC	
DUAL FUEL GAS/LIGHT OIL	K750A... 1.65/80/100/125 ...EC* K890A... 1.65/80/100/125 ...EC* K990A... 1.80/100/125 ...EC*	
DUAL FUEL GAS/LIGHT OIL	K590X... 1.65/80/100/125 ...EC* K750X... 1.65/80/100/125 ...EC*	
DUAL FUEL GAS/LIGHT OIL	HR1025... 1.65/80/100/125 ...EC* HR1030... 1.65/80/100/125 ...EC* HR1040... 1.65/80/100/125 ...EC*	

** Servomotor air, light oil-heavy oil and heavy oil SQM33.711A9*
**** Only KPBY version*

DUAL FUEL BURNERS NATURAL GAS/LIGHT OIL NATURAL GAS/HEAVY OIL WITH LMV 26...
Electronically Operated without Inverter
complete with leakage control

Version EC (Novanta, Cinquecento, Mille, Duemila)

LMV 26...

AZL 23

Servomotor
AIR SQM33...

Servomotor
GAS
LIGHT OIL-HEAVY OIL
SQM33...

***Servomotor
HEAVY OIL
SQM33...

Series	Burner Type	Extra charge €
DUAL FUEL GAS/LIGHT OIL	N1060A... 1.80/100/125 ...EC* N1300A... 1.80/100/125 ...EC*	
DUAL FUEL GAS/LIGHT OIL	N880X... 1.80/100/125 ...EC* N925X... 1.80/100/125 ...EC* N1060X... 1.80/100/125 ...EC*	
DUAL FUEL GAS/LIGHT OIL	HR2050... 1.80/100/125 ...EC*	
DUAL FUEL GAS/LIGHT OIL	HRX2050R... 1.80/100/125 ...EC* HRX2050... 1.80/100/125 ...EC*	
DUAL FUEL GAS/HEAVY OIL	KP91- KP92 - KP93 ...EC	
DUAL FUEL GAS/HEAVY OIL	KPBY91 - KPBY92 ...EC	
DUAL FUEL GAS/HEAVY OIL	KR512 - KR515 - KR520 - KR525 ...EC	
DUAL FUEL GAS/HEAVY OIL	KRBY512 - KRBY515 - KRBY520 - KRBY525 ...EC	
DUAL FUEL GAS/HEAVY OIL	KR1025 - KR1030 - KR1040 ...EC*	
DUAL FUEL GAS/HEAVY OIL	KR2050 ...EC*	
DUAL FUEL GAS/HEAVY OIL	KRBY1025... 1.65/80/100 ...EC* KRBY1030... 1.65/80/100 ...EC* KRBY1040... 1.80/100/125 ...EC*	
DUAL FUEL GAS/HEAVY OIL	KRBY2050 ...EC*	

** Servomotor air, light oil-heavy oil and heavy oil SQM33.711A9*
**** Only KPBY version*

DUAL FUEL BURNERS NATURAL GAS/LIGHT OIL NATURAL GAS/HEAVY OIL WITH LMV 26... Electronically Operated with Inverter

Version ED (Novanta, Cinquecento, Mille, Duemila)

LMV 26...

AZL 23

Servomotor AIR SQM33...

Servomotor GAS SQM33...

***Servomotor HEAVY OIL SQM33...

Inverter

Series	Burner Type	Extra charge €
DUAL FUEL GAS/LIGHT OIL	HR91A... 1.50/65/80/100 ...ED HR92A... 1.50/65/80/100 ...ED HR93A... 1.50/65/80/100 ...ED	
DUAL FUEL GAS/LIGHT OIL	HRX92R... 1.50/65/80/100 ...ED HRX92.1... 1.50/65/80/100 ...ED	
DUAL FUEL GAS/LIGHT OIL	G290A... 1.50/65/80/100 ...ED G310A... 1.50/65/80/100 ...ED	
DUAL FUEL GAS/LIGHT OIL	G215X... 1.50/65/80/100 ...ED G250X... 1.50/65/80/100 ...ED G300X... 1.50/65/80/100 ...ED	
DUAL FUEL GAS/LIGHT OIL	H455A... 1.50/65/80/100 ...ED H630A... 1.50/65/80/100 ...ED H685A... 1.50/65/80/100 ...ED	
DUAL FUEL GAS/LIGHT OIL	H365X... 1.50/65/80/100 ...ED H440X... 1.50/65/80/100 ...ED H500X... 1.50/65/80/100 ...ED	
DUAL FUEL GAS/LIGHT OIL	HR512A... 1.50/65/80/100 ...ED HR515A... 1.50/65/80/100 ...ED HR520A... 1.50/65/80/100 ...ED HR525A... 1.65/80/100 ...ED	
DUAL FUEL GAS/LIGHT OIL	K750A... 1.65/80/100/125 ...ED* K890A... 1.65/80/100/125 ...ED* K990A... 1.80/100/125 ...ED*	
DUAL FUEL GAS/LIGHT OIL	K590X... 1.65/80/100/125 ...ED* K750X... 1.65/80/100/125 ...ED*	

** Servomotor air, light oil and heavy oil SQM33.711A9*
**** Only KPBY version*

DUAL FUEL BURNERS NATURAL GAS/LIGHT OIL NATURAL GAS/HEAVY OIL WITH LMV 26... Electronically Operated with Inverter

Version ED (Novanta, Cinquecento, Mille, Duemila)

LMV 26...

AZL 23

Servomotor AIR SQM33...

Servomotor GAS SQM33...

***Servomotor HEAVY OIL SQM33...

Inverter

Series	Burner Type	Extra charge €
DUAL FUEL GAS/LIGHT OIL	HR1025... 1.65/80/100/125 ...ED* HR1030... 1.65/80/100/125 ...ED* HR1040... 1.65/80/100/125 ...ED*	
DUAL FUEL GAS/LIGHT OIL	N1060A... 1.80/100/125 ...ED* N1300A... 1.80/100/125 ...ED*	
DUAL FUEL GAS/LIGHT OIL	N880X... 1.80/100/125 ...ED* N925X... 1.80/100/125 ...ED* N1060X... 1.80/100/125 ...ED*	
DUAL FUEL GAS/LIGHT OIL	HR2050... 1.80/100/125 ...ED*	
DUAL FUEL GAS/LIGHT OIL	HRX2050R... 1.80/100/125 ...ED* HRX2050... 1.80/100/125 ...ED*	
DUAL FUEL GAS/HEAVY OIL	KP91- KP92 - KP93 ...ED	
DUAL FUEL GAS/HEAVY OIL	KPBY91 - KPBY92 ...ED	
DUAL FUEL GAS/HEAVY OIL	KR512 - KR515 - KR520 - KR525 ...ED	
DUAL FUEL GAS/HEAVY OIL	KRBY512 - KRBY515 - KRBY520 - KRBY525 ...ED	
DUAL FUEL GAS/HEAVY OIL	KR1025 - KR1030 - KR1040 ...ED*	
DUAL FUEL GAS/HEAVY OIL	KR2050 ...ED*	
DUAL FUEL GAS/HEAVY OIL	KRBY1025... 1.65/80/100 ...ED* KRBY1030... 1.65/80/100 ...ED* KRBY1040... 1.80/100/125 ...ED*	
DUAL FUEL GAS/HEAVY OIL	KRBY2050... 1.80/100/125 ...ED*	

** Servomotor air, light oil and heavy oil SQM33.711A9*
**** Only KPBY version*

ELECTRONIC SUPERVISION AND CONTROL SYSTEM WITH LMV 5... for medium-large burners

CIB UNIGAS S.p.A has adopted, in its series of burners, an electronic system of command and control.
This innovative system, divided into two types of devices, can be used both for civil and industrial applications (up to 80MW) and for burners which use a single or mixed fuel and with continuous or intermittent operation. This system allows the control of the various elements that play an important role in the correct mixture of the fuel and combustion air.
This solution permits to achieve the maximum precision in the combustion adjustment.
The system can also be expanded through interface with an oxygen control probe and/or a fan speed adjustment inverter in order to improve the performance. In this way we can obtain high savings both in terms of fuel and electric power required.
The command and control system is composed of a twin microprocessor electronic unit for to integrate all burner's command and control functions and of a programming and adjustment local unit.

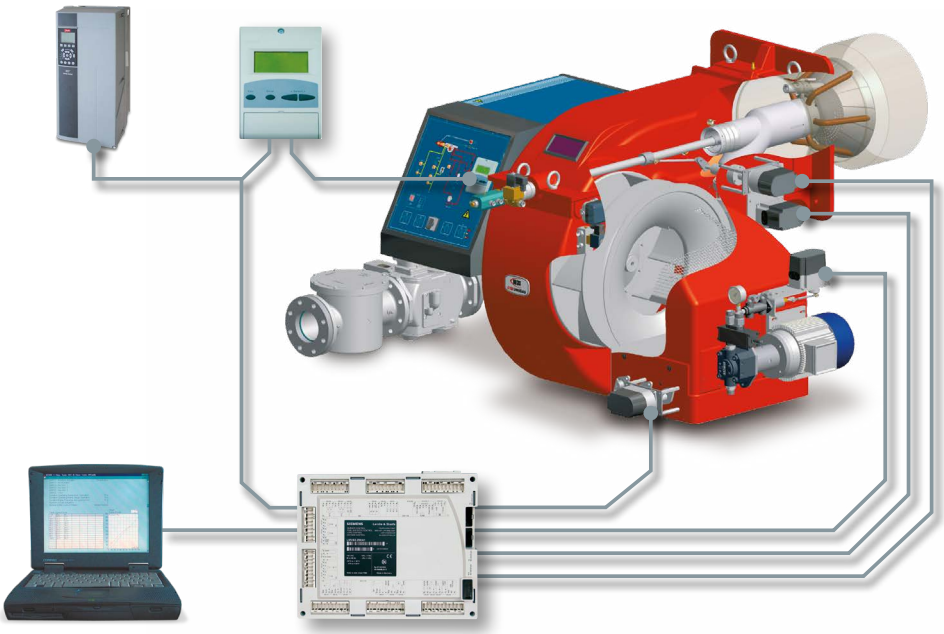

Integrated functions include air/fuel ratio adjustment (with work pointconfigura tionpossibility), PID temperature or pressure regulator, gas valve leakage control, adjustable cycle times, pre-configured fuel trains, and input/output configuration.
The programming levels are protected by password for the three types of user (manufacturer, servicing personnel, final user); the dialogue between servocontrol and sensors is performed using twin-channel CAN Bus protocol in order to guarantee the greatest safety and reliability. The unit can be installed directly in the machine or inside a separate electric control panel positioned no further away than 100 meters.
Using the appropriate designated optional software, the system can be configured directly by PC.

Flame control box integrated functions:

- Burner control;
- Electronic cam;
- Power regulator;
- Gas valve leakage control system;
- Oxygen control;
- Inverter control;
- Dialogue with BMS systems or PLC (MODBUS);
- Burner commissioning and configuration via PC-tool;
- Simple programming with AZL and PC-tool;
- Complete self-diagnostic function (error memory, number of firings, burner operation time, clock, etc.);
- 3 levels of parameter access: (manufacturer, servicing personnel, final user);
- Remote diagnostics;
- All components can be easily interchanged;
- Parameter upgrading with PC-tool;
- Dialogue with MODBUS protocol.

ELECTRONIC SUPERVISION AND CONTROL SYSTEM WITH LMV 5... for medium-large burners

Model	Series	Fuel	LMV 51.100	LMV 51.300	LMV 52	
ES	NOVANTA - CINQUECENTO MILLE - DUEMILA	gas	●			
ES	NOVANTA - CINQUECENTO MILLE - DUEMILA	liquid fuel	●			
ES	NOVANTA - CINQUECENTO MILLE - DUEMILA	dual fuel burners	●			
EO	NOVANTA - CINQUECENTO MILLE - DUEMILA	gas			●	
EO	NOVANTA - CINQUECENTO MILLE - DUEMILA	dual fuel burners			●	
EI	NOVANTA - CINQUECENTO MILLE - DUEMILA	gas		●		
EI	NOVANTA - CINQUECENTO MILLE - DUEMILA	liquid fuel		●		
EI	NOVANTA - CINQUECENTO MILLE - DUEMILA	dual fuel burners		●		
EK	NOVANTA - CINQUECENTO MILLE - DUEMILA	gas			●	
EK	NOVANTA - CINQUECENTO MILLE - DUEMILA	dual fuel burners			●	

	AZL 5x	SQM4x air	SQM4x gas	SQM4x liquid fuel	O_2 PROBE	INVERTER
	●	●	●			
	●	●		●		
	●	●	●	●		
	●	●	●		●	
	●	●	●	●	●	
	●	●	●			●
	●	●		●		●
	●	●	●	●		●
	●	●	●		●	●
	●	●	●	●	●	●

BURNERS WITH LMV 5...
Micro Processor

Version ES (Novanta, Cinquecento, Mille, Duemila)

LMV 51.100

AZL 5

SQM4...

SQM4...

Electronically operated burners without O_2 trim and inverter

Series	Burner Type	Extra charge €
GAS	R91A - R92A - R93A ...ES	
GAS	RX92R - RX92.1 ...ES	
GAS	G290A -G310A ...ES	
GAS	G215X - G250X - G300X ...ES	
GAS	H455A - H630A - H685A ...ES	
GAS	H365X - H440X - H500X ...ES	
GAS	R512A - R515A - R520A - R525A ...ES	
GAS	K750A - K890A -K990A ...ES	
GAS	K590X -K590X ...ES	
GAS	R1025 -R1030 - R1040 ...ES	
GAS	N1060A- N1300A ...ES	
GAS	N880X - N925X - N1060X ...ES	
GAS	R2050 - R2060 - R2080 ...ES	
GAS	RX2050R - RX2050 - RX2060 - RX2080 ...ES	
LIGHT OIL	RG91 - RG92 - RG93 ...ES	
LIGHT OIL	RG510 - RG515 - RG520 - RG525 ...ES	
LIGHT OIL	RG1030 - RG1040 ...ES	
LIGHT OIL	RG2050 - RG2060 - RG2080 ...ES	
HEAVY OIL	PN91 - PN92 - PN93 ...ES	
HEAVY OIL	PBY90 - PBY91 - PBY92 - PBY93 ...ES	
HEAVY OIL	RN510 - RN515 - RN520 - RN525 ...ES	
HEAVY OIL	RBY510 - RBY515 - RBY520 - RBY525 ...ES	
HEAVY OIL	RN1030 - RN1040 ...ES	
HEAVY OIL	RBY1025 - RBY1030 - RBY1040 ...ES	
HEAVY OIL	RN2050 - RN2060 - RN2080 ...ES	
HEAVY OIL	RBY2050 - RBY2060 - RBY2080 ...ES	

Version ES (Novanta, Cinquecento, Mille, Duemila)

LMV 51.100

AZL 5

SQM4..

SQM4...

SQM4...

Electronically operated burners without O_2 trim and inverter

Series	Burner Type	Extra charge €
DUAL FUEL GAS/LIGHT OIL	HR91A - HR92A - HR93A ...ES	
DUAL FUEL GAS/LIGHT OIL	HRX92R - HRX92.1...ES	
DUAL FUEL GAS/LIGHT OIL	G290A -G310A ...ES	
DUAL FUEL GAS/LIGHT OIL	G215X - G250X - G300X ...ES	
DUAL FUEL GAS/LIGHT OIL	H455A - H630A - H685A ...ES	
DUAL FUEL GAS/LIGHT OIL	H365X - H440X - H500X ...ES	
DUAL FUEL GAS/LIGHT OIL	HR512A - HR515A - HR520A - HR525A ...ES	
DUAL FUEL GAS/LIGHT OIL	K750A - K890A -K990A ...ES	
DUAL FUEL GAS/LIGHT OIL	K590X -K590X ...ES	
DUAL FUEL GAS/LIGHT OIL	HR1025 - HR1030 - H R1040 ...ES	
DUAL FUEL GAS/LIGHT OIL	N1060A- N1300A ...ES	
DUAL FUEL GAS/LIGHT OIL	N880X - N925X - N1060X ...ES	
DUAL FUEL GAS/LIGHT OIL	HR2050 - HR2060 - HR2080 ...ES	
DUAL FUEL GAS/LIGHT OIL	HRX2050R - HRX2050 - HRX2060 - HRX2080 ...ES	
DUAL FUEL GAS/HEAVY OIL	KP91 - KP92 - KP93 ...ES	
DUAL FUEL GAS/HEAVY OIL	KR512 - KR515 - KR520 - KR525 ...ES	
DUAL FUEL GAS/HEAVY OIL	KR1025 - KR1030 - KR1040 ...ES	
DUAL FUEL GAS/HEAVY OIL	KRBY1025 - KRBY1030 - KRBY1040 ...ES	
DUAL FUEL GAS/HEAVY OIL	KRBY2050 - KRBY2060 - KRBY2080 ...ES	

BURNERS WITH LMV 5...
Micro Processor

Version EO (Novanta, Cinquecento, Mille, Duemila)

LMV 52...

AZL 5

SQM4...

SQM4...

SONDA O2...

Electronically operated burners complete with O_2 trim without inverter
With oxygen probe

Series	Burner Type	Extra charge €
GAS	R91A - R92A - R93A ...EO	
GAS	RX92R - RX92.1 ...EO	
GAS	G290A -G310A ...EO	
GAS	G215X - G250X - G300X ...EO	
GAS	H455A - H630A - H685A ...EO	
GAS	H365X - H440X - H500X ...EO	
GAS	R512A - R515A - R520A - R525A ...EO	
GAS	K750A - K890A -K990A ...EO	
GAS	K590X -K590X ...EO	
GAS	R1025 -R1030 - R1040 ...EO	
GAS	N1060A- N1300A ...EO	
GAS	N880X - N925X - N1060X ...EO	
GAS	R2050 - R2060 - R2080 ...EO	
GAS	RX2050R - RX2050 - RX2060 - RX2080 ...EO	
LIGHT OIL	RG91 - RG92 - RG93 ...EO	
LIGHT OIL	RG510 - RG515 - RG520 - RG525 ...EO	
LIGHT OIL	RG1030 - RG1040 ...EO	
LIGHT OIL	RG2050 - RG2060 - RG2080 ...EO	

Version EO (Novanta, Cinquecento, Mille, Duemila)

LMV 52...

AZL 5

SQM4...

SQM4...

SQM4...

SONDA O2...

Electronically operated burners complete with O_2 trim without inverter ****
With oxygen probe

Series	Burner Type	Extra charge €
DUAL FUEL GAS/LIGHT OIL	HR91A - HR92A - HR93A ...EO	
DUAL FUEL GAS/LIGHT OIL	HRX92R - HRX92.1 ...EO	
DUAL FUEL GAS/LIGHT OIL	G290A -G310A ...EO	
DUAL FUEL GAS/LIGHT OIL	G215X - G250X - G300X ...EO	
DUAL FUEL GAS/LIGHT OIL	H455A - H630A - H685A ...EO	
DUAL FUEL GAS/LIGHT OIL	H365X - H440X - H500X ...EO	
DUAL FUEL GAS/LIGHT OIL	HR512A - HR515A - HR520A - HR525A ...EO	
DUAL FUEL GAS/LIGHT OIL	K750A - K890A -K990A ...EO	
DUAL FUEL GAS/LIGHT OIL	K590X -K590X ...EO	
DUAL FUEL GAS/LIGHT OIL	HR1025 - HR1030 - H R1040 ...EO	
DUAL FUEL GAS/LIGHT OIL	N1060A- N1300A ...EO	
DUAL FUEL GAS/LIGHT OIL	N880X - N925X - N1060X ...EO	
DUAL FUEL GAS/LIGHT OIL	HR2050 - HR2060 - HR2080 ...EO	
DUAL FUEL GAS/LIGHT OIL	HRX2050R - HRX2050 - HRX2060 - HRX2080 ...EO	
DUAL FUEL GAS/HEAVY OIL****	KP91 - KP92 - KP93 ...EO	
DUAL FUEL GAS/HEAVY OIL****	KR512 - KR515 - KR520 - KR525 ...EO	
DUAL FUEL GAS/HEAVY OIL****	KR1025 - KR1030..DN65 - KR1030 - KR1040 ...EO	
DUAL FUEL GAS/HEAVY OIL****	KRBY1025 - KRBY1030 - KRBY1040 ...EO	
DUAL FUEL GAS/HEAVY OIL****	KRBY2050 - KRBY2060 - KRBY2080 ...EO	

****** The O_2 trim can be performed only when working with gas.*

BURNERS WITH LMV 5...
Micro Processor

Version EI (Novanta, Cinquecento, Mille, Duemila)

LMV 51.300

AZL 5

SQM4...

SQM4...

INVERTER

Electronically operated burners complete with inverter without O_2 trim

Series	Burner Type	Extra charge €
GAS	R91A - R92A - R93A ...EI	
GAS	RX92R - RX92.1 ...EI	
GAS	G290A -G310A ...EI	
GAS	G215X - G250X - G300X ...EI	
GAS	H455A - H630A - H685A ...EI	
GAS	H365X - H440X - H500X ...EI	
GAS	R512A - R515A - R520A - R525A ...EI	
GAS	K750A - K890A -K990A ...EI	
GAS	K590X -K590X ...EI	
GAS	R1025 -R1030 - R1040 ...EI	
GAS	N1060A- N1300A ...EI	
GAS	N880X - N925X - N1060X ...EI	
GAS	R2050 - R2060 - R2080 ...EI	
GAS	RX2050R - RX2050 - RX2060 - RX2080 ...EI	
LIGHT OIL	RG91 - RG92 - RG93 ...EI	
LIGHT OIL	RG510 - RG515 - RG520 - RG525 ...EI	
LIGHT OIL	RG1030 - RG1040 ...EI	
LIGHT OIL	RG2050 - RG2060 - RG2080 ...EI	
HEAVY OIL	PN91 - PN92 - PN93 ...EI	
HEAVY OIL	PBY90 - PBY91 - PBY92 - PBY93 ...EI	
HEAVY OIL	RN510 - RN515 - RN520 - RN525 ...EI	
HEAVY OIL	RBY510 - RBY515 - RBY520 - RBY525 ...EI	
HEAVY OIL	RN1030 - RN1040 ...EI	
HEAVY OIL	RBY1025 - RBY1030 - RBY1040 ...EI	
HEAVY OIL	RN2050 - RN2060 - RN2080 ...EI	
HEAVY OIL	RBY2050 - RBY2060 - RBY2080 ...EI	

Version EI (Novanta, Cinquecento, Mille, Duemila)

LMV 51.300

AZL 5

SQM4...

SQM4...

SQM4...

INVERTER

Electronically operated burners complete with inverter without O_2 trim

Series	Burner Type	Extra charge €
DUAL FUEL GAS/LIGHT OIL	HR91A - HR92A - HR93A ...EI	
DUAL FUEL GAS/LIGHT OIL	HRX92R - HRX92.1 ...EI	
DUAL FUEL GAS/LIGHT OIL	G290A -G310A ...EI	
DUAL FUEL GAS/LIGHT OIL	G215X - G250X - G300X ...EI	
DUAL FUEL GAS/LIGHT OIL	H455A - H630A - H685A ...EI	
DUAL FUEL GAS/LIGHT OIL	H365X - H440X - H500X ...EI	
DUAL FUEL GAS/LIGHT OIL	HR512A - HR515A - HR520A - HR525A ...EI	
DUAL FUEL GAS/LIGHT OIL	K750A - K890A -K990A ...EI	
DUAL FUEL GAS/LIGHT OIL	K590X -K590X ...EI	
DUAL FUEL GAS/LIGHT OIL	HR1025 - HR1030 - H R1040 ...EI	
DUAL FUEL GAS/LIGHT OIL	N1060A- N1300A ...EI	
DUAL FUEL GAS/LIGHT OIL	N880X - N925X - N1060X ...EI	
DUAL FUEL GAS/LIGHT OIL	HR2050 - HR2060 - HR2080 ...EI	
DUAL FUEL GAS/LIGHT OIL	HRX2050R - HRX2050 - HRX2060 - HRX2080 ...EI	
DUAL FUEL GAS/HEAVY OIL	KP91 - KP92 - KP93 ...EI	
DUAL FUEL GAS/HEAVY OIL	KR512 - KR515 - KR520 - KR525 ...EI	
DUAL FUEL GAS/HEAVY OIL	KR1025 - KR1030..DN65 - KR1030 - KR1040 ...EI	
DUAL FUEL GAS/HEAVY OIL	KRBY1025 - KRBY1030 - KRBY1040 ...EI	
DUAL FUEL GAS/HEAVY OIL	KRBY2050 - KRBY2060 - KRBY2080 ...EI	

BURNERS WITH LMV 5...
Micro Processor

Version EK (Novanta, Cinquecento, Mille, Duemila)

LMV 52...

AZL 5

SQM4...

SQM4...

SONDA O2...

INVERTER

Electronically operated burners complete with inverter and O_2 trim
With oxygen probe

Series	Burner Type	Extra charge €
GAS	R91A - R92A - R93A ...EK	
GAS	RX92R - RX92.1 ...EK	
GAS	G290A -G310A ...EK	
GAS	G215X - G250X - G300X ...EK	
GAS	H455A - H630A - H685A ...EK	
GAS	H365X - H440X - H500X ...EK	
GAS	R512A - R515A - R520A - R525A ...EK	
GAS	K750A - K890A -K990A ...EK	
GAS	K590X -K590X ...EK	
GAS	R1025 -R1030 - R1040 ...EK	
GAS	N1060A- N1300A ...EK	
GAS	N880X - N925X - N1060X ...EK	
GAS	R2050 - R2060 - R2080 ...EK	
GAS	RX2050R - RX2050 - RX2060 - RX2080 ...EK	
GAS	RX2050R - RX2050.1 - RX2060 - RX2080 ...EK	
GAS	RX2050R - RX2050.1 - RX2060 - RX2080 ...EK	
LIGHT OIL	RG91 - RG92 - RG93 ...EK	
LIGHT OIL	RG510 - RG515 - RG520 - RG525 ...EK	
LIGHT OIL	RG1030 - RG1040 ...EK	
LIGHT OIL	RG2050 - RG2060 - RG2080 ...EK	

Version EK (Novanta, Cinquecento, Mille, Duemila)

LMV52...

AZL 5

SQM4...

SQM4...

SQM4...

SONDA O2...

INVERTER

Electronically operated burners complete with inverter and O_2 trim****
With oxygen probe

Series	Burner Type	Extra charge €
DUAL FUEL GAS/LIGHT OIL	HR91A - HR92A - HR93A ...EK	
DUAL FUEL GAS/LIGHT OIL	HRX92R - HRX92.1 ...EK	
DUAL FUEL GAS/LIGHT OIL	G290A -G310A ...EK	
DUAL FUEL GAS/LIGHT OIL	G215X - G250X - G300X ...EK	
DUAL FUEL GAS/LIGHT OIL	H455A - H630A - H685A ...EK	
DUAL FUEL GAS/LIGHT OIL	H365X - H440X - H500X ...EK	
DUAL FUEL GAS/LIGHT OIL	HR512A - HR515A - HR520A - HR525A ...EK	
DUAL FUEL GAS/LIGHT OIL	K750A - K890A -K990A ...EK	
DUAL FUEL GAS/LIGHT OIL	K590X -K590X ...EK	
DUAL FUEL GAS/LIGHT OIL	HR1025 - HR1030 - H R1040 ...EK	
DUAL FUEL GAS/LIGHT OIL	N1060A- N1300A ...EK	
DUAL FUEL GAS/LIGHT OIL	N1060X -N1300X ...EK	
DUAL FUEL GAS/LIGHT OIL	HR2050 - HR2060 - HR2080 ...EK	
DUAL FUEL GAS/LIGHT OIL	HRX2050R - HRX2050 - HRX2060 - HRX2080 ...EK	
DUAL FUEL GAS/HEAVY OIL****	KP91 - KP92 - KP93 ...EK	
DUAL FUEL GAS/HEAVY OIL****	KR512 - KR515 - KR520 - KR525 ...EK	
DUAL FUEL GAS/HEAVY OIL****	KR1025 - KR1030..DN65 - KR1030 - KR1040 ...EK	
DUAL FUEL GAS/HEAVY OIL****	KRBY1025 - KRBY1030 - KRBY1040 ...EK	
DUAL FUEL GAS/HEAVY OIL****	KRBY2050 - KRBY2060 - KRBY2080 ...EK	

***** The O_2 trim can be performed only when working with gas*

NATURAL GAS BURNERS

novanta series	NEW novanta series	NEW cinquecento series	cinquecento series
R91A - PR/MD	**G290A** - PR/MD...SR	**H455A** - PR/MD...SR	**R512A** - PR/MD
R92A - PR/MD	**G310A** - PR/MD...SR	**H630A** - PR/MD...SR	**R515A** - PR/MD
R93A - PR/MD		**H685A** - PR/MD...SR	**R520A** - PR/MD
			R525A - PR/MD

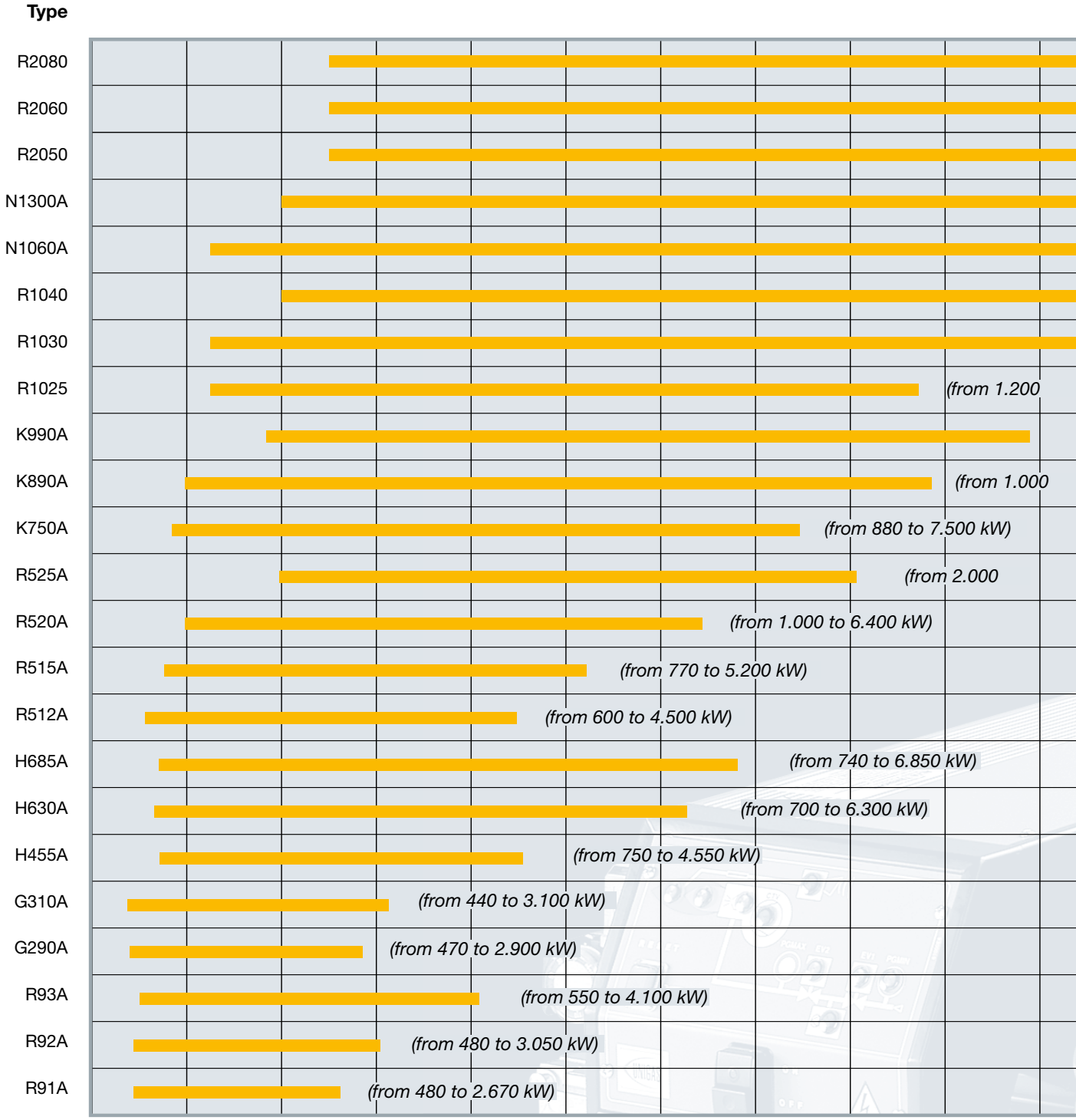

NEW cinquecento series	mille series	NEW mille series	duemila series
K750A - PR/MD...SR	**R1025** - PR/MD	**N1060A** - PR/MD...SR	**R2050** - PR/MD
K880A - PR/MD...SR	**R1030** - PR/MD	**N1300A** - PR/MD...SR	**R2060** - PR/MD
K990A - PR/MD...SR	**R1040** - PR/MD		**R2080** - PR/MD

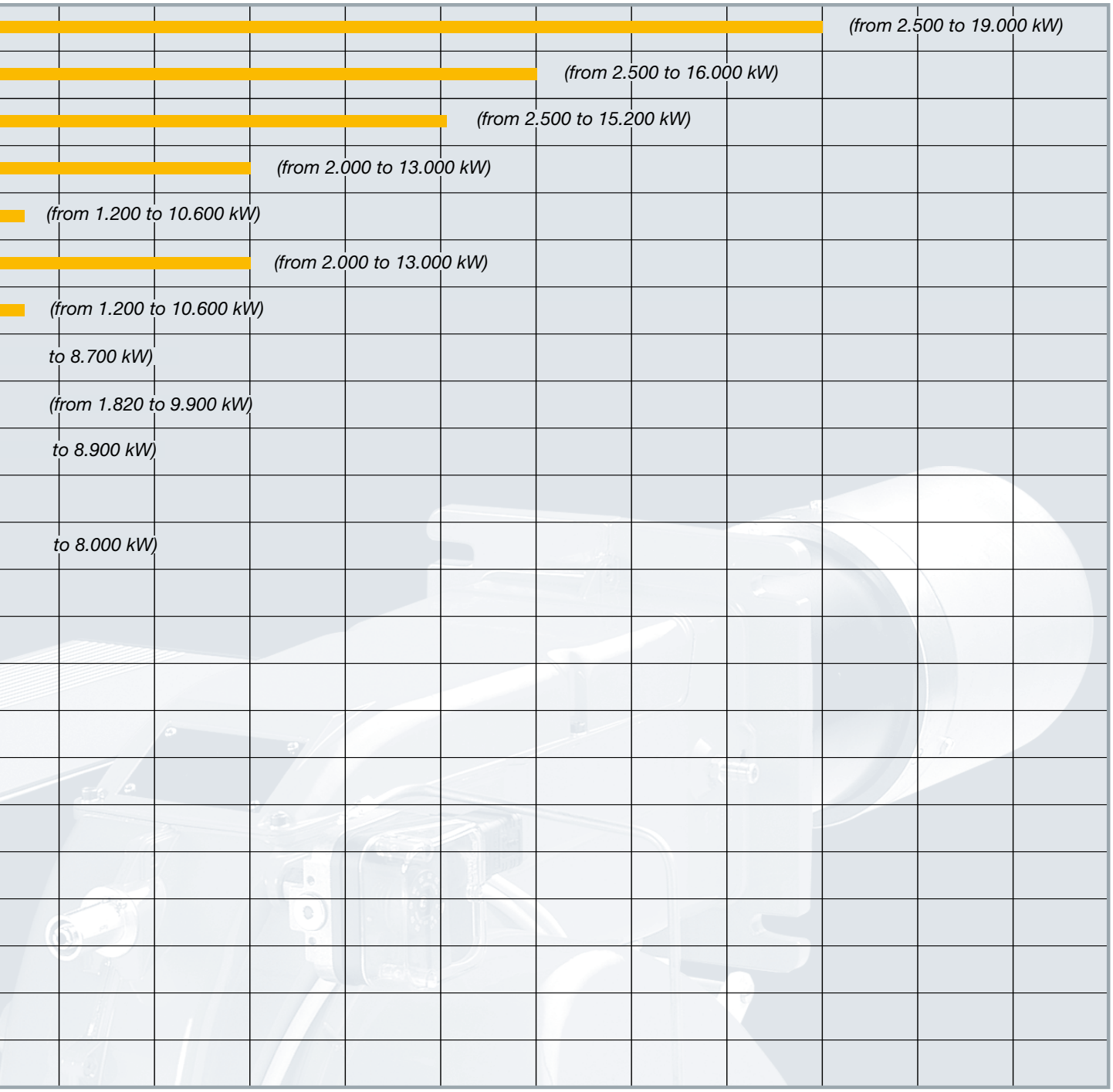

novanta SERIES R91A R92A R93A

GAS

This range of medium output burners **Low NO_x Class 2 (< 120 mg/kWh)**, made in aluminum, was studied and developed to get high performance and efficiency combined with low emissions. The NOVANTA series with a maximum power of 4.100 kW, are in this selection of product that is particularly competitive. The user-friendly application and maintenance are the strengths of these burners.

Electronic set up (optional)

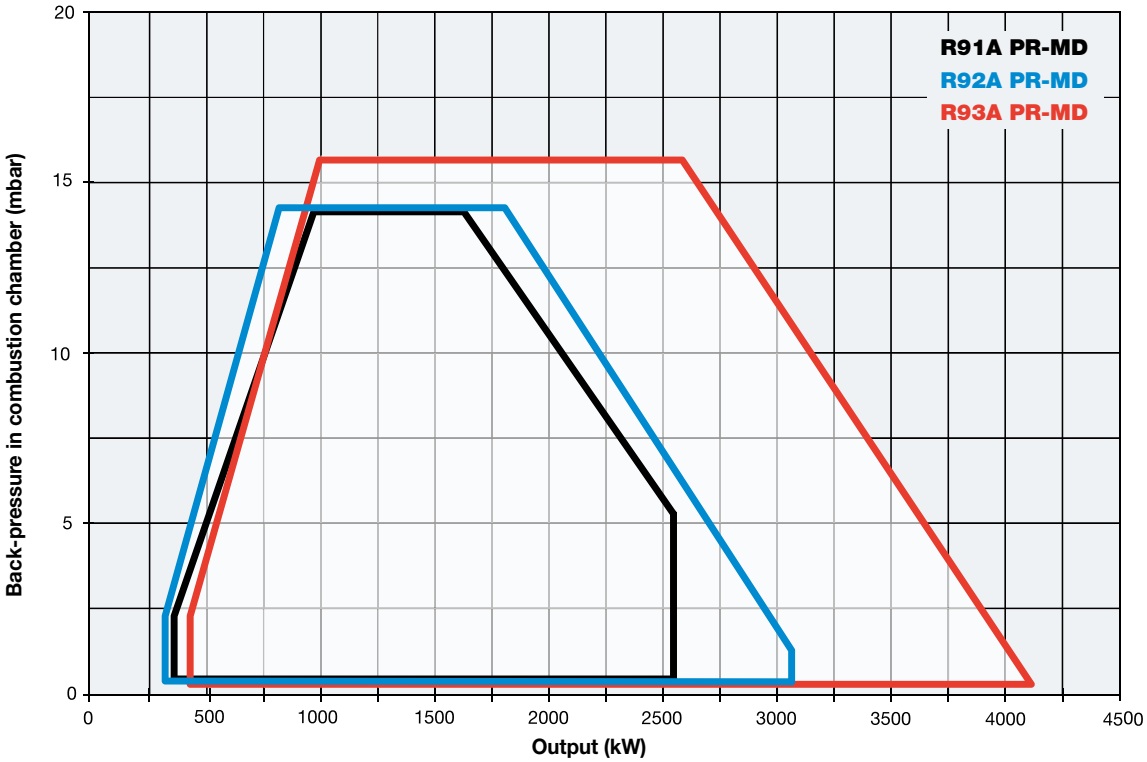

R91A R92A R93A novanta SERIES

TECHNICAL DETAILS

Type	Model	Power kW		Auxiliary electrical power supply	Motor electrical power supply	Fan motor	Gas connections	Noise level
		min.	max.			kW	Rp	dBA
R91A	M-.xx.S.xx.A.1.xxx	480	2.670	230 V 1N AC 50 Hz	400 V 3 AC 50 Hz	4,0	2” - DN65 - DN80 - DN100	74,5
R92A	M-.xx.S.xx.A.1.xxx	480	3.050	230 V 1N AC 50 Hz	400 V 3 AC 50 Hz	5,5	2” - DN65 - DN80 - DN100	76,9
R93A	M-.xx.S.xx.A.1.xxx	550	4.100	230 V 1N AC 50 Hz	400 V 3 AC 50 Hz	7,5	2” - DN65 - DN80 - DN100	77,4

For the configuration of the gas train, see pages 116-117.

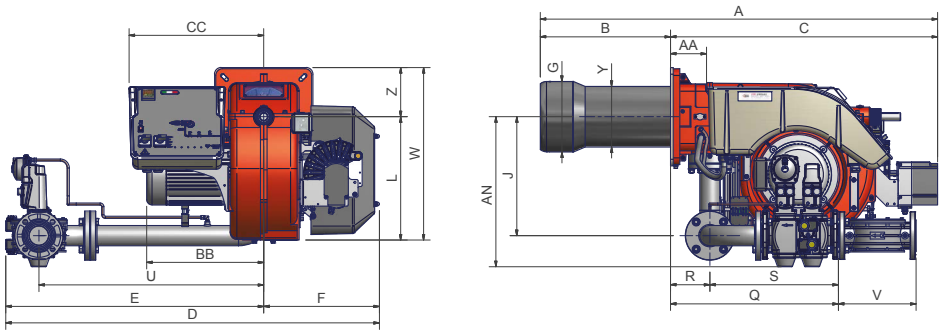

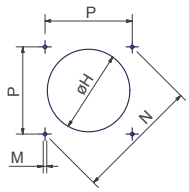

Suggested boiler drilling

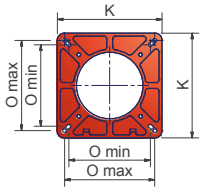

Burner flange

Type	Packaging dimensions (mm)			
	l	p	h	kg
R91A	1730	1280	1020	250
R92A	1730	1280	1020	260
R93A	1730	1280	1020	300

Approximate values (regarding model with gas train DN 100)

Type	Model	Overall dimensions (mm)																										
		A	AA	AN	B	BB	C	CC	D	E	F	G	H	J	K	L	M	N	O min.	O max.	P	Q	R	S	U	V	W	Y	Z
R91A	M-.xx.S.xx.A.1.50	1495	135	550	490	441	1005	507	1160	765	435	265	295	447	360	464	M12	424	280	310	300	532	148	384	624	190	649	228	185
R91A	M-.xx.S.xx.A.1.65	1495	135	564	490	441	1005	507	1406	971	435	265	295	447	360	464	M12	424	280	310	300	632	148	484	846	292	649	228	185
R91A	M-.xx.S.xx.A.1.80	1495	135	579	490	441	1005	507	1437	1002	435	265	295	447	360	464	M12	424	280	310	300	683	148	535	875	313	649	228	185
R91A	M-.xx.S.xx.A.1.100	1495	135	592	490	441	1005	507	1520	1085	435	265	295	447	360	464	M12	424	280	310	300	790	148	642	942	353	649	228	185
R92A	M-.xx.S.xx.A.1.50	1495	135	550	490	441	1005	507	1160	725	435	269	299	447	360	464	M12	424	280	310	300	532	148	384	624	190	649	228	185
R92A	M-.xx.S.xx.A.1.65	1495	135	564	490	441	1005	507	1406	971	435	269	299	442	360	464	M12	424	280	310	300	632	148	484	846	292	649	228	185
R92A	M-.xx.S.xx.A.1.80	1495	135	579	490	441	1005	507	1437	1002	435	269	299	447	360	464	M12	424	280	310	300	683	148	535	875	313	649	228	185
R92A	M-.xx.S.xx.A.1.100	1495	135	592	490	441	1005	507	1520	1859	435	269	299	447	360	464	M12	424	280	310	300	790	148	642	942	353	649	228	185
R93A	M-.xx.S.xx.A.1.50	1500	135	550	495	493	1005	507	1160	725	435	304	344	447	360	464	M12	424	280	310	300	532	148	384	624	190	649	228	185
R93A	M-.xx.S.xx.A.1.65	1500	135	564	495	493	1005	507	1406	971	435	304	344	447	360	464	M12	424	280	310	300	632	148	484	846	292	649	228	185
R93A	M-.xx.S.xx.A.1.80	1500	135	579	495	493	1005	507	1520	1002	435	304	344	447	360	464	M12	424	280	310	300	683	148	535	875	313	649	228	185
R93A	M-.xx.S.xx.A.1.100	1500	135	592	495	493	1005	507	1160	1085	435	304	344	447	360	464	M12	424	280	310	300	790	148	642	942	353	649	228	185

Approximate values

MECHANICAL OPERATION

Model	Gas train	Operation	R91A Code	R91A Price €	R92A Code	R92A Price €
M-.PR.S.xx.A.1.50	2”	PR	012014853		012015253	
M-.PR.S.xx.A.1.65	DN65	PR	012014953		012015353	
M-.PR.S.xx.A.1.80	DN80	PR	012015053		012015453	
M-.PR.S.xx.A.1.100	DN100	PR	012015153		012015553	
M-.MD.S.xx.A.1.50	2”	MD(*)	012014854		012015254	
M-.MD.S.xx.A.1.65	DN65	MD(*)	012014954		012015354	
M-.MD.S.xx.A.1.80	DN80	MD(*)	012015054		012015454	
M-.MD.S.xx.A.1.100	DN100	MD(*)	012015154		012015554	

Model	Gas train	Operation	R93A Code	R93A Price €
M-.PR.S.xx.A.1.50	2”	PR	012015653	
M-.PR.S.xx.A.1.65	DN65	PR	012015753	
M-.PR.S.xx.A.1.80	DN80	PR	012015853	
M-.PR.S.xx.A.1.100	DN100	PR	012015953	
M-.MD.S.xx.A.1.50	2”	MD(*)	012015654	
M-.MD.S.xx.A.1.65	DN65	MD(*)	012015754	
M-.MD.S.xx.A.1.80	DN80	MD(*)	012015854	
M-.MD.S.xx.A.1.100	DN100	MD(*)	012015954	

(*) In order for the supply to be completed, the burner must be equipped with the respective modulating probe (see accessory table, page 290).
In compliance with GAR DIRECTIVE 2016/426/EU.

ELECTRONIC OPERATION

Model	Gas train	Operation	R91A Code	R91A Price €	R92A Code	R92A Price €
M-.PR.S.xx.A.1.50.EA	2”	PR	01201485A		01201525A	
M-.PR.S.xx.A.1.65.EA	DN65	PR	01201495A		01201535A	
M-.PR.S.xx.A.1.80.EA	DN80	PR	01201505A		01201545A	
M-.PR.S.xx.A.1.100.EA	DN100	PR	01201515A		01201555A	
M-.MD.S.xx.A.1.50.EA	2”	MD(*)	01201485E		01201525E	
M-.MD.S.xx.A.1.65.EA	DN65	MD(*)	01201495E		01201535E	
M-.MD.S.xx.A.1.80.EA	DN80	MD(*)	01201505E		01201545E	
M-.MD.S.xx.A.1.100.EA	DN100	MD(*)	01201515E		01201555E	
M-.MD.S.xx.A.1.50.ES	2”	MD(*)	01201485S		01201525S	
M-.MD.S.xx.A.1.65.ES	DN65	MD(*)	01201495S		01201535S	
M-.MD.S.xx.A.1.80.ES	DN80	MD(*)	01201505S		01201545S	
M-.MD.S.xx.A.1.100.ES	DN100	MD(*)	01201515S		01201555S	

Model	Gas train	Operation	R93A Code	R93A Price €
M-.PR.S.xx.A.1.50.EA	2”	PR	01201565A	
M-.PR.S.xx.A.1.65.EA	DN65	PR	01201575A	
M-.PR.S.xx.A.1.80.EA	DN80	PR	01201585A	
M-.PR.S.xx.A.1.100.EA	DN100	PR	01201595A	
M-.MD.S.xx.A.1.50.EA	2”	MD(*)	01201565E	
M-.MD.S.xx.A.1.65.EA	DN65	MD(*)	01201575E	
M-.MD.S.xx.A.1.80.EA	DN80	MD(*)	01201585E	
M-.MD.S.xx.A.1.100.EA	DN100	MD(*)	01201595E	
M-.MD.S.xx.A.1.50.ES	2”	MD(*)	01201565S	
M-.MD.S.xx.A.1.65.ES	DN65	MD(*)	01201575S	
M-.MD.S.xx.A.1.80.ES	DN80	MD(*)	01201585S	
M-.MD.S.xx.A.1.100.ES	DN100	MD(*)	01201595S	

(*) In order for the supply to be completed, the burner must be equipped with the respective modulating probe (see accessory table, page 290).
In compliance with GAR DIRECTIVE 2016/426/EU.

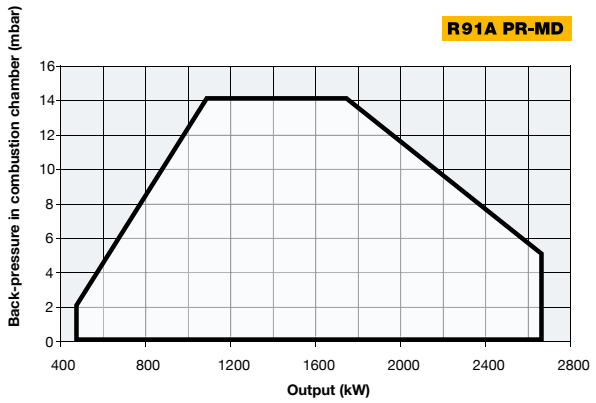

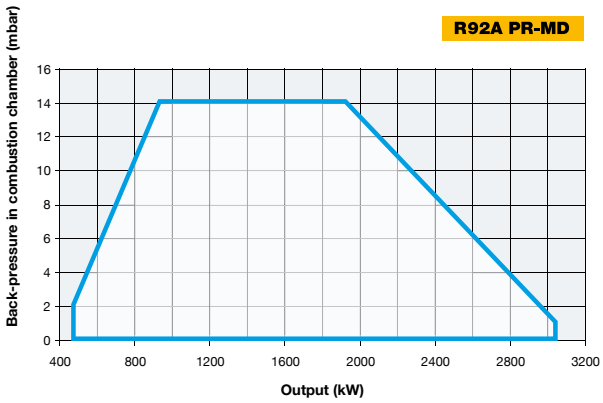

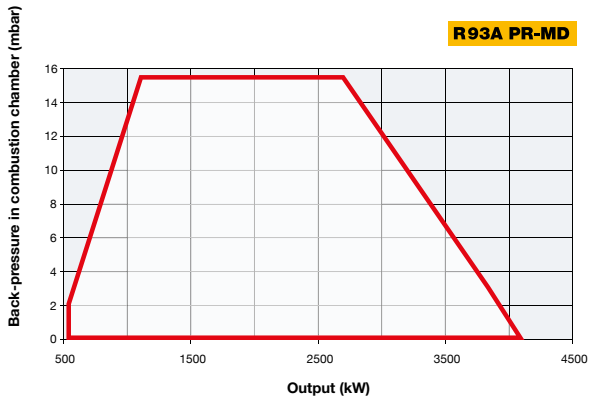

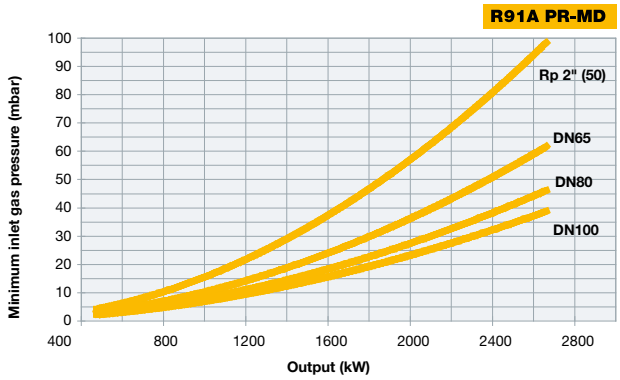

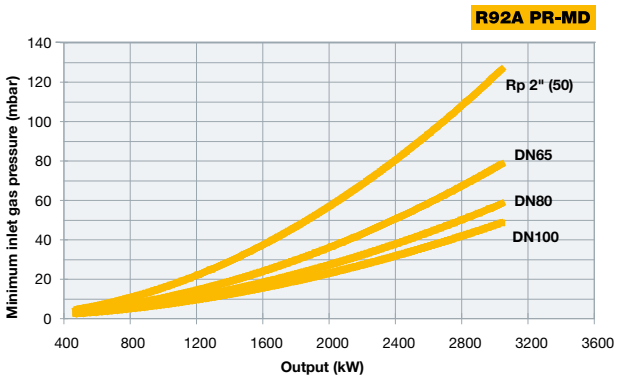

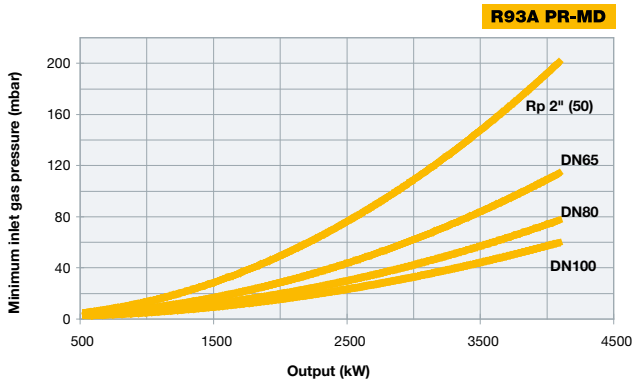

Attention: the graph shows the value of the gas output (kW) against the corresponding pressure without the combustion chamber back pressure. To know the minimum gas pressure at gas train, in order to get the gas output, it is necessary to add the boiler back pressure to the value read on the curve.

NEW

GAS

CIB UNIGAS < 120 mg/kWh CLASS 2 Low NOx

G290A G310A...SR novanta SERIES

The new standard G type NOVANTA series **Low NO_x burners Class 2 (< 120 mg/kWh**), made in aluminum housing with a backward curved centrifugal impeller is studied and developed to get high performance and efficiency combined with low emissions.
This series with a maximum power of 3.100 kW, are in this selection of product that is particularly competitive.
The userfriendly application and maintenance are the strengths of these burners.

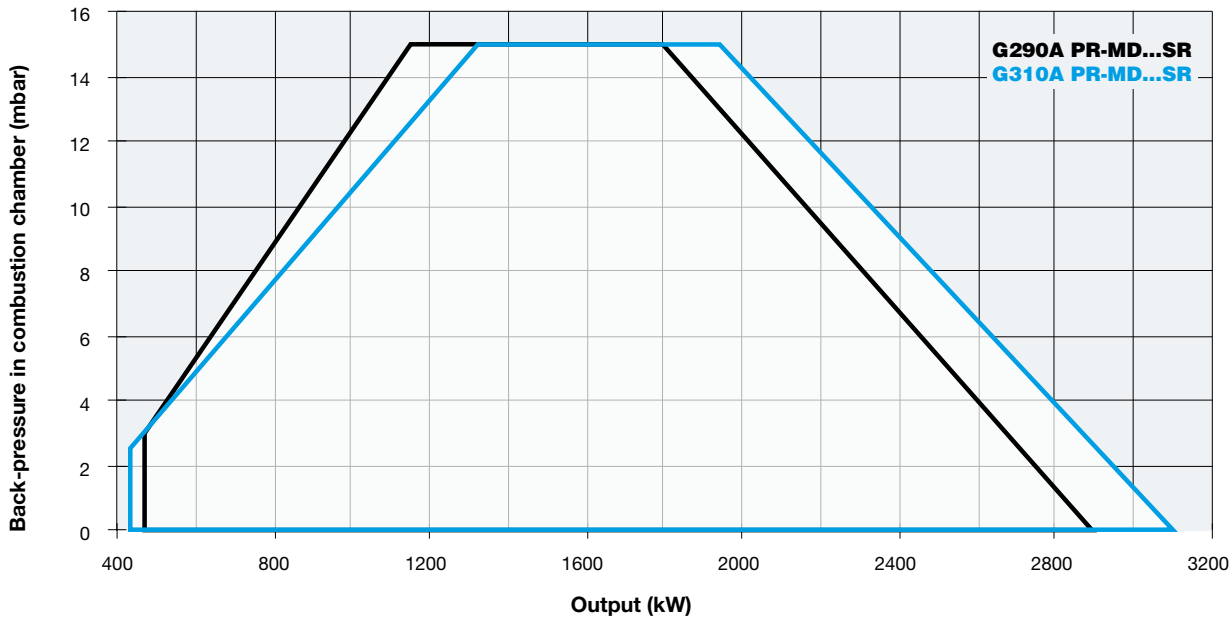

G290A G310A...SR

GAS

TECHNICAL DETAILS

Type	Model	Power kW		Auxiliary electrical power supply	Motor electrical power supply	Fan motor	Gas connections	Noise level
		min.	max.			kW	Rp	dBA
G290A	M-.xx.SR.xx.A.1.xxx	470	2.900	230 V 1N AC 50 Hz	400 V 3 AC 50 Hz	3	2” - DN65 - DN80 - DN100	< 85
G310A	M-.xx.SR.xx.A.1.xxx	440	3.100	230 V 1N AC 50 Hz	400 V 3 AC 50 Hz	4	2” - DN65 - DN80 - DN100	< 85

For the configuration of the gas train, see pages 116-117.

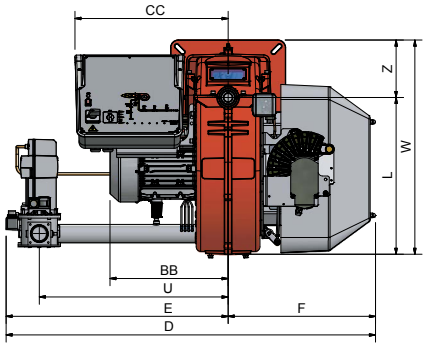

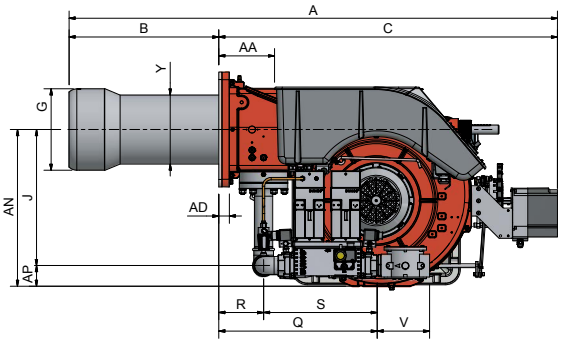

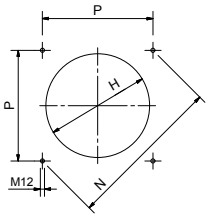

Suggested boiler drilling

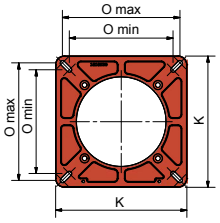

Burner flange

Type	Packaging dimensions (mm)			
	l	p	h	kg
G290A	1680	1260	1020	275
G310A	1770	1120	1020	280

Approximate values (regarding model with gas train DN 80)

Type	Model	Overall dimensions (mm)																													
		A	AA	AD	AN	AP	B	BB	C	CC	D	E	F	G	H	J	K	L	M	N	O min.	O max.	P	Q	R	S	U	V	W	Y	Z
G290A	M-.xx.SR.xx.A.1.50	1609	184	35	550	100	490	391	1119	531	1212	725	487	269	300	450	380	518	M12	453	300	340	320	533	149	384	624	190	708	228	190
G290A	M-.xx.SR.xx.A.1.65	1609	184	35	567	117	490	391	1119	531	1456	969	487	269	300	450	380	518	M12	453	300	340	320	636	149	487	845	292	708	228	190
G290A	M-.xx.SR.xx.A.1.80	1609	184	35	582	132	490	391	1119	531	1489	1002	487	269	300	450	380	518	M12	453	300	340	320	687	149	538	875	310	708	228	190
G290A	M-.xx.SR.xx.A.1.100	1609	184	35	595	145	490	391	1119	531	1569	1082	487	269	300	450	380	518	M12	453	300	340	320	791	149	642	942	353	708	228	190
G310A	M-.xx.SR.xx.A.1.50	1614	184	35	550	100	495	391	1119	531	1212	725	487	304	347	450	380	518	M12	453	300	340	320	533	149	384	624	190	708	228	190
G310A	M-.xx.SR.xx.A.1.65	1614	184	35	567	117	495	391	1119	531	1456	969	487	304	347	450	380	518	M12	453	300	340	320	636	149	487	845	292	708	228	190
G310A	M-.xx.SR.xx.A.1.80	1614	184	35	582	132	495	391	1119	531	1489	1002	487	304	347	450	380	518	M12	453	300	340	320	687	149	538	875	310	708	228	190
G310A	M-.xx.SR.xx.A.1.100	1614	184	35	595	145	495	391	1119	531	1569	1082	487	304	347	450	380	518	M12	453	300	340	320	791	149	642	942	353	708	228	190

Approximate values

MECHANICAL OPERATION

Model	Gas train	Operation	G290A...SR Code	G290A...SR Price €	G310A...SR Code	G310A...SR Price €
M-.PR.SR.xx.A.1.50	2"	PR	036010153		036010553	
M-.PR.SR.xx.A.1.65	DN65	PR	036010253		036010653	
M-.PR.SR.xx.A.1.80	DN80	PR	036010353		036010753	
M-.PR.SR.xx.A.1.100	DN100	PR	036010453		036010853	
M-.MD.SR.xx.A.1.50	2"	MD(*)	036010154		036010554	
M-.MD.SR.xx.A.1.65	DN65	MD(*)	036010254		036010654	
M-.MD.SR.xx.A.1.80	DN80	MD(*)	036010354		036010754	
M-.MD.SR.xx.A.1.100	DN100	MD(*)	036010454		036010854	

(*) In order for the supply to be completed, the burner must be equipped with the respective modulating probe (see accessory table, page 290).
In compliance with GAR DIRECTIVE 2016/426/EU.

ELECTRONIC OPERATION

Model	Gas train	Operation	G290A...SR Code	G290A...SR Price €	G310A...SR Code	G310A...SR Price €
M-.PR.SR.xx.A.1.50.EA	2"	PR	03601015A		03601055A	
M-.PR.SR.xx.A.1.65.EA	DN65	PR	03601025A		03601065A	
M-.PR.SR.xx.A.1.80.EA	DN80	PR	03601035A		03601075A	
M-.PR.SR.xx.A.1.100.EA	DN100	PR	03601045A		03601085A	
M-.MD.SR.xx.A.1.50.EA	2"	MD(*)	03601015E		03601055E	
M-.MD.SR.xx.A.1.65.EA	DN65	MD(*)	03601025E		03601065E	
M-.MD.SR.xx.A.1.80.EA	DN80	MD(*)	03601035E		03601075E	
M-.MD.SR.xx.A.1.100.EA	DN100	MD(*)	03601045E		03601085E	
M-.MD.SR.xx.A.1.50.ES	2"	MD(*)	03601015S		03601055S	
M-.MD.SR.xx.A.1.65.ES	DN65	MD(*)	03601025S		03601065S	
M-.MD.SR.xx.A.1.80.ES	DN80	MD(*)	03601035S		03601075S	
M-.MD.SR.xx.A.1.100.ES	DN100	MD(*)	03601045S		03601085S	

(*) In order for the supply to be completed, the burner must be equipped with the respective modulating probe (see accessory table, page 290).
In compliance with GAR DIRECTIVE 2016/426/EU.

G290A G310A...SR

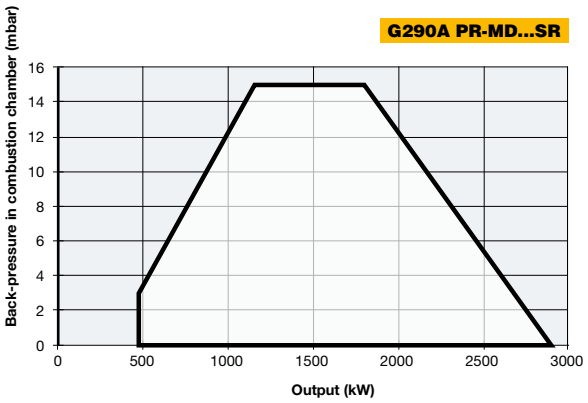

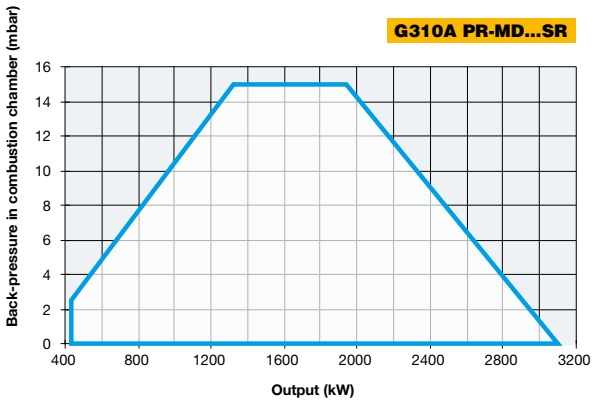

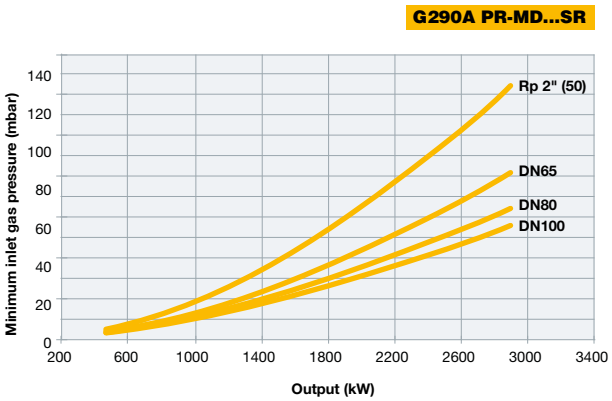

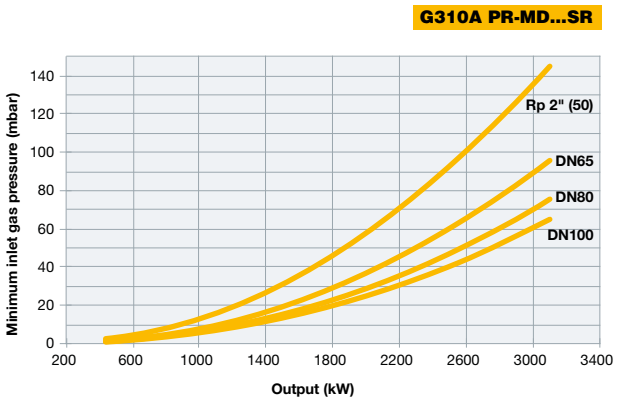

Attention: the graph shows the value of the gas output (kW) against the corresponding pressure without the combustion chamber back pressure. To know the minimum gas pressure at gas train, in order to get the gas output, it is necessary to add the boiler back pressure to the value read on the curve.

NEW

GAS

CIB UNIGAS < 120 mg/kWh CLASS 2 Low NOx

H455A H630A H685A...SR cinquecento SERIES

The new standard H type CINQUECENTO series **Low NO_x burners Class 2 (< 120 mg/kWh)**, made in aluminum housing with a backward curved centrifugal impeller is studied and developed to get high performance and efficiency combined with low emissions. This series with a maximum power of 6.850 kW, are in this selection of product that is particularly competitive. The userfriendly application and maintenance are the strengths of these burners.

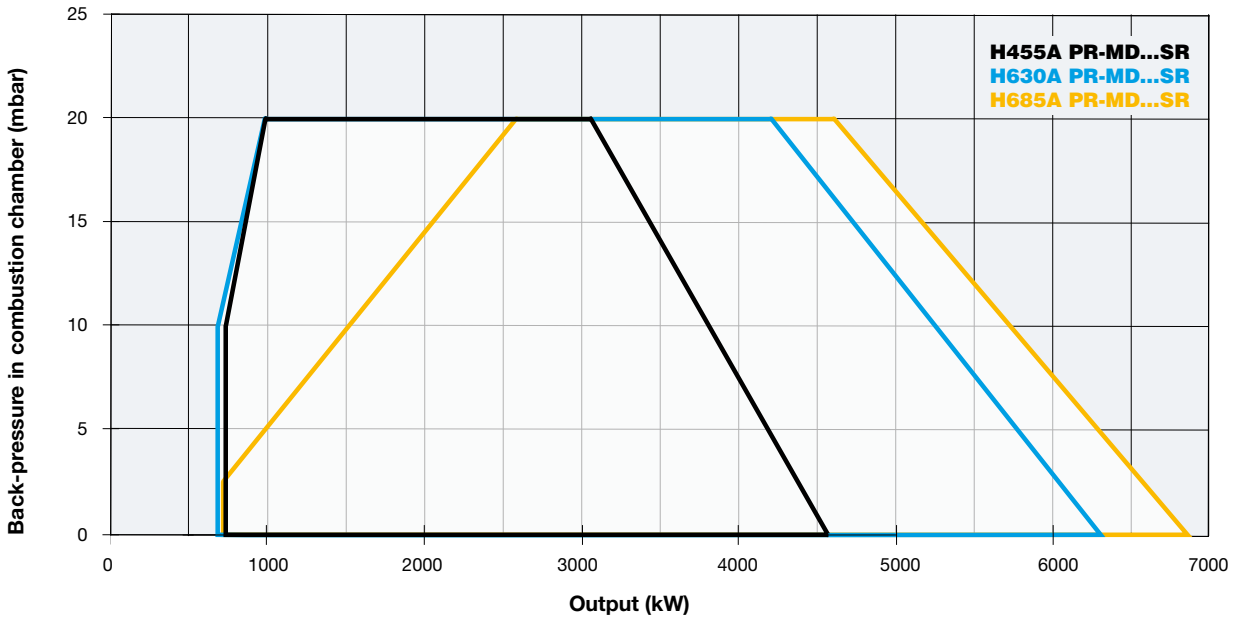

H455A H630A H685A...SR

TECHNICAL DETAILS

Type	Model	Power kW		Auxiliary electrical power supply	Motor electrical power supply	Fan motor	Gas connections	Noise level
		min.	max.			kW	Rp	dBA
H455A	M-.xx.SR.xx.A.1.xxx	750	4.550	230 V 1N AC 50 Hz	400 V 3 AC 50 Hz	7,5	2" - DN65 - DN80 - DN100	< 85
H630A	M-.xx.SR.xx.A.1.xxx	700	6.300	230 V 1N AC 50 Hz	400 V 3 AC 50 Hz	9,2	2" - DN65 - DN80 - DN100	< 85
H685A	M-.xx.SR.xx.A.1.xxx	740	6.850	230 V 1N AC 50 Hz	400 V 3 AC 50 Hz	9,2	2" - DN65 - DN80 - DN100	< 85

For the configuration of the gas train, see pages 116-117.

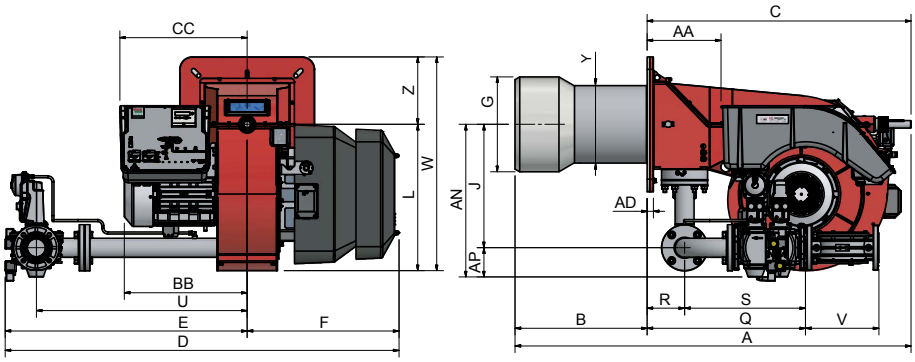

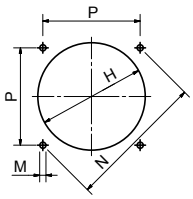

Suggested boiler drilling

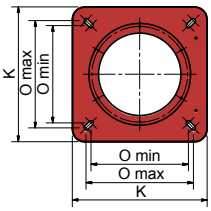

Burner flange

Type	Packaging dimensions (mm)			
	l	p	h	kg
H455A	1890	1290	1220	378
H630A	1890	1290	1220	380
H685A	1890	1290	1220	385

Approximate values (regarding model with gas train DN 80)

Type	Model	Overall dimensions (mm)																													
		A	AA	AD	AN	AP	B	BB	C	CC	D	E	F	G	H	J	K	L	M	N	O min.	O max.	P	Q	R	S	U	V	W	Y	Z
H455A	M-.xx.SR.xx.A.1.50	1712	295	25	595	100	495	471	1217	511	1554	946	608	304	350	494	540	586	M14	552	390	430	390	764	150	613	845	190	856	288	270
H455A	M-.xx.SR.xx.A.1.65	1712	295	25	611	117	495	471	1217	511	1577	969	608	304	350	494	540	586	M14	552	390	430	390	634	150	484	845	294	856	288	270
H455A	M-.xx.SR.xx.A.1.80	1712	295	25	626	132	495	471	1217	511	1610	1002	608	304	350	494	540	586	M14	552	390	430	390	686	150	535	875	313	856	288	270
H455A	M-.xx.SR.xx.A.1.100	1712	295	25	639	145	495	471	1217	511	1690	1082	608	304	350	494	540	586	M14	552	390	430	390	791	150	642	942	353	856	288	270
H630A	M-.xx.SR.xx.A.1.50	1747	295	25	595	100	530	488	1217	511	1554	946	608	340	380	494	540	586	M14	552	390	430	390	764	150	613	845	190	856	284	270
H630A	M-.xx.SR.xx.A.1.65	1747	295	25	611	117	530	488	1217	511	1577	969	608	340	380	494	540	586	M14	552	390	430	390	634	150	484	845	294	856	284	270
H630A	M-.xx.SR.xx.A.1.80	1747	295	25	626	132	530	488	1217	511	1610	1002	608	340	380	494	540	586	M14	552	390	430	390	686	150	535	875	313	856	284	270
H630A	M-.xx.SR.xx.A.1.100	1747	295	25	639	145	530	488	1217	511	1690	1082	608	340	380	494	540	586	M14	552	390	430	390	791	150	642	942	353	856	284	270
H685A	M-.xx.SR.xx.A.1.50	1747	295	25	595	100	530	488	1217	511	1554	946	608	380	430	494	540	586	M14	552	390	430	390	764	150	613	845	190	856	328	270
H685A	M-.xx.SR.xx.A.1.65	1747	295	25	611	117	530	488	1217	511	1577	969	608	380	430	494	540	586	M14	552	390	430	390	634	150	484	845	294	856	328	270
H685A	M-.xx.SR.xx.A.1.80	1747	295	25	626	132	530	488	1217	511	1610	1002	608	380	430	494	540	586	M14	552	390	430	390	686	150	535	875	313	856	328	270
H685A	M-.xx.SR.xx.A.1.100	1747	295	25	639	145	530	488	1217	511	1690	1082	608	380	430	494	540	586	M14	552	390	430	390	791	150	642	942	353	856	328	270

Approximate values

MECHANICAL OPERATION

Model	Gas train	Operation	H455A...SR Code	H455A...SR Price €	H630A...SR Code	H630A...SR Price €
M-.PR.SR.xx.A.1.50	2"	PR	035010153		035010553	
M-.PR.SR.xx.A.1.65	DN65	PR	035010253		035010653	
M-.PR.SR.xx.A.1.80	DN80	PR	035010353		035010753	
M-.PR.SR.xx.A.1.100	DN100	PR	035010453		035010853	
M-.MD.SR.xx.A.1.50	2"	MD(*)	035010154		035010554	
M-.MD.SR.xx.A.1.65	DN65	MD(*)	035010254		035010654	
M-.MD.SR.xx.A.1.80	DN80	MD(*)	035010354		035010754	
M-.MD.SR.xx.A.1.100	DN100	MD(*)	035010454		035010854	

Model	Gas train	Operation	H685A...SR Code	H685A...SR Price €
M-.PR.SR.xx.A.1.50	2"	PR	035010953	
M-.PR.SR.xx.A.1.65	DN65	PR	035011053	
M-.PR.SR.xx.A.1.80	DN80	PR	035011153	
M-.PR.SR.xx.A.1.100	DN100	PR	035011253	
M-.MD.SR.xx.A.1.50	2"	MD(*)	035010954	
M-.MD.SR.xx.A.1.65	DN65	MD(*)	035011054	
M-.MD.SR.xx.A.1.80	DN80	MD(*)	035011154	
M-.MD.SR.xx.A.1.100	DN100	MD(*)	035011254	

(*) In order for the supply to be completed, the burner must be equipped with the respective modulating probe (see accessory table, page 290).
In compliance with GAR DIRECTIVE 2016/426/EU.

ELECTRONIC OPERATION

Model	Gas train	Operation	H455A...SR Code	H455A...SR Price €	H630A...SR Code	H630A...SR Price €
M-.PR.SR.xx.A.1.50.EA	2"	PR	03501015A		03501055A	
M-.PR.SR.xx.A.1.65.EA	DN65	PR	03501025A		03501065A	
M-.PR.SR.xx.A.1.80.EA	DN80	PR	03501035A		03501075A	
M-.PR.SR.xx.A.1.100.EA	DN100	PR	03501045A		03501085A	
M-.MD.SR.xx.A.1.50.EA	2"	MD(*)	03501015E		03501055E	
M-.MD.SR.xx.A.1.65.EA	DN65	MD(*)	03501025E		03501065E	
M-.MD.SR.xx.A.1.80.EA	DN80	MD(*)	03501035E		03501075E	
M-.MD.SR.xx.A.1.100.EA	DN100	MD(*)	03501045E		03501085E	
M-.MD.SR.xx.A.1.50.ES	2"	MD(*)	03501015S		03501055S	
M-.MD.SR.xx.A.1.65.ES	DN65	MD(*)	03501025S		03501065S	
M-.MD.SR.xx.A.1.80.ES	DN80	MD(*)	03501035S		03501075S	
M-.MD.SR.xx.A.1.100.ES	DN100	MD(*)	03501045S		03501085S	

Model	Gas train	Operation	H685A...SR Code	H685A...SR Price €
M-.PR.SR.xx.A.1.50.EA	2"	PR	03501095A	
M-.PR.SR.xx.A.1.65.EA	DN65	PR	03501105A	
M-.PR.SR.xx.A.1.80.EA	DN80	PR	03501115A	
M-.PR.SR.xx.A.1.100.EA	DN100	PR	03501125A	
M-.MD.SR.xx.A.1.50.EA	2"	MD(*)	03501095E	
M-.MD.SR.xx.A.1.65.EA	DN65	MD(*)	03501105E	
M-.MD.SR.xx.A.1.80.EA	DN80	MD(*)	03501115E	
M-.MD.SR.xx.A.1.100.EA	DN100	MD(*)	03501125E	
M-.MD.SR.xx.A.1.50.ES	2"	MD(*)	03501095S	
M-.MD.SR.xx.A.1.65.ES	DN65	MD(*)	03501105S	
M-.MD.SR.xx.A.1.80.ES	DN80	MD(*)	03501115S	
M-.MD.SR.xx.A.1.100.ES	DN100	MD(*)	03501125S	

(*) In order for the supply to be completed, the burner must be equipped with the respective modulating probe (see accessory table, page 290).
In compliance with GAR DIRECTIVE 2016/426/EU.

H455A H630A H685A...SR cinquecento SERIES

H455A PR-MD...SR

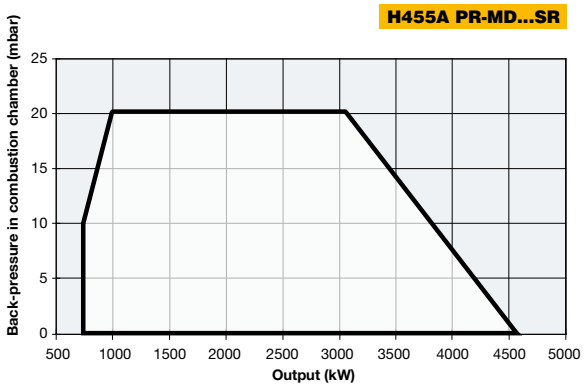

H630A PR-MD...SR

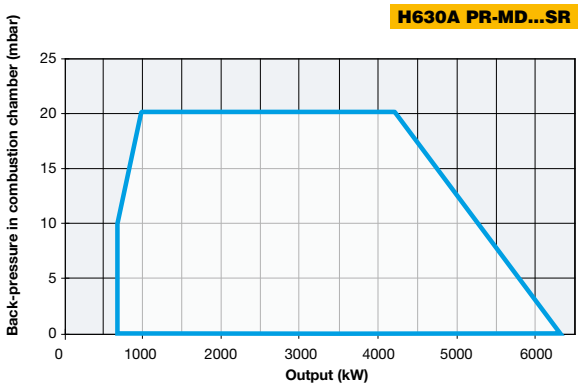

H685A PR-MD...SR

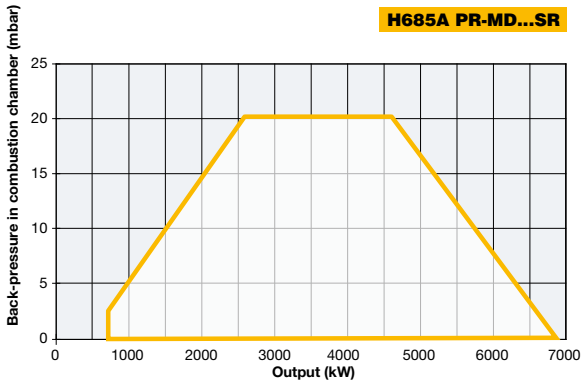

H455A PR-MD...SR

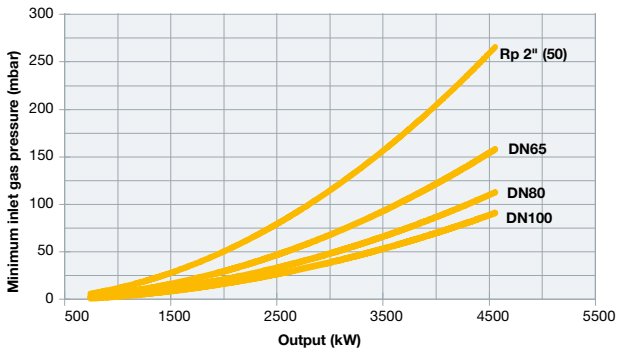

H630A PR-MD...SR

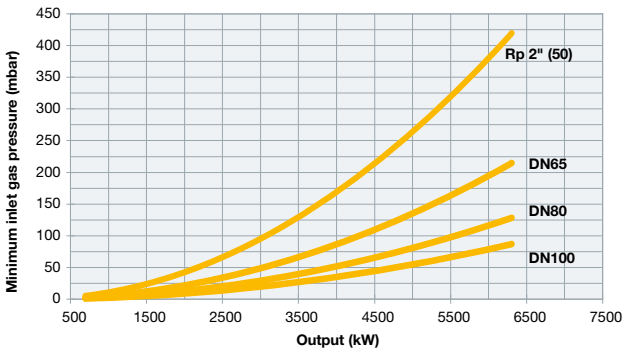

H685A PR-MD...SR

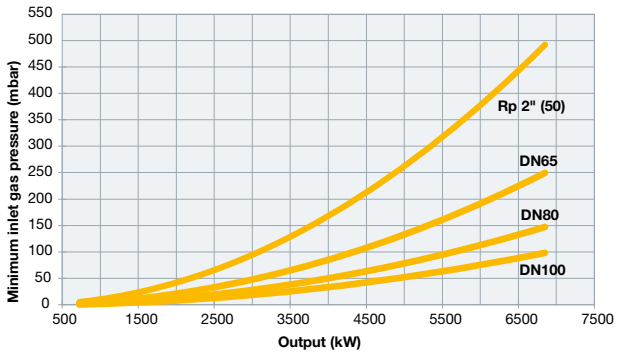

Attention: the graph shows the value of the gas output (kW) against the corresponding pressure without the combustion chamber back pressure. To know the minimum gas pressure at gas train, in order to get the gas output, it is necessary to add the boiler back pressure to the value read on the curve.

cinquecento SERIES R512A R515A R520A R525A

GAS

This range of medium output burners **Low NO_x Class 2 (< 120 mg/kWh)**, made in aluminum, was studied and developed to get high performance and efficiency combined with low emissions.
The CINQUECENTO series with a maximum power of 8000 kW, is in this selection of product that is particularly competitive.
The user-friendly application and maintenance are the strengths of these burners.

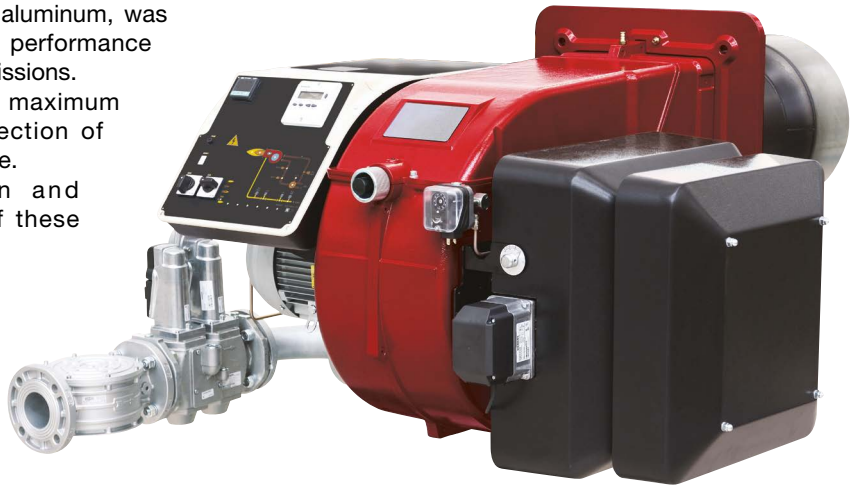

Electronic set up (optional)

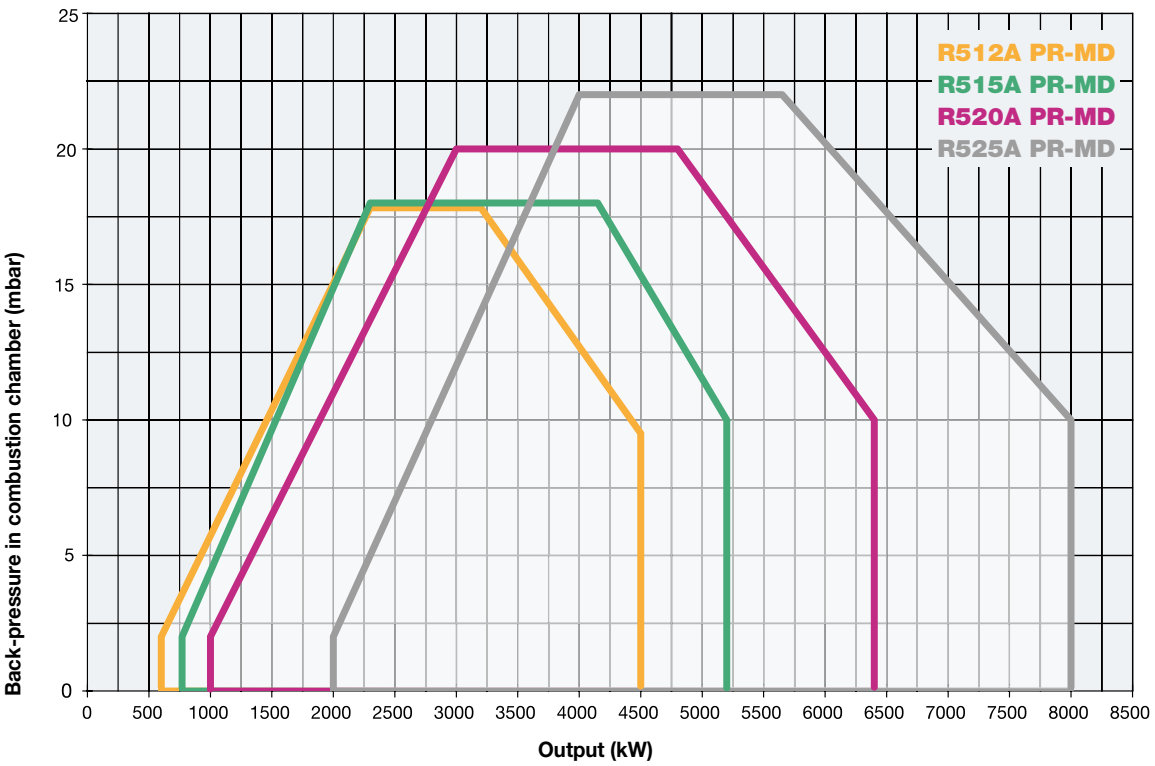

R512A R515A R520A R525A cinquecento SERIES

TECHNICAL DETAILS

Type	Model	Power kW		Auxiliary electrical power supply	Motor electrical power supply	Fan motor	Gas connections	Noise level
		min.	max.			kW	Rp	dBA
R512A	M-.xx.S.xx.A.1.xxx	600	4.500	230 V 1N AC 50 Hz	400 V 3 AC 50 Hz	9,2	2” - DN65 - DN80 - DN100	81,7
R515A	M-.xx.S.xx.A.1.xxx	770	5.200	230 V 1N AC 50 Hz	400 V 3 AC 50 Hz	11,0	2” - DN65 - DN80 - DN100	82,3
R520A	M-.xx.S.xx.A.1.xxx	1.000	6.400	230 V 1N AC 50 Hz	400 V 3 AC 50 Hz	15,0	2” - DN65 - DN80 - DN100	83,2
R525A	M-.xx.S.xx.A.1.xxx	2.000	8.000	230 V 1N AC 50 Hz	400 V 3 AC 50 Hz	18,5	DN65 - DN80 - DN100	84,9

For the configuration of the gas train, see pages 116-117.

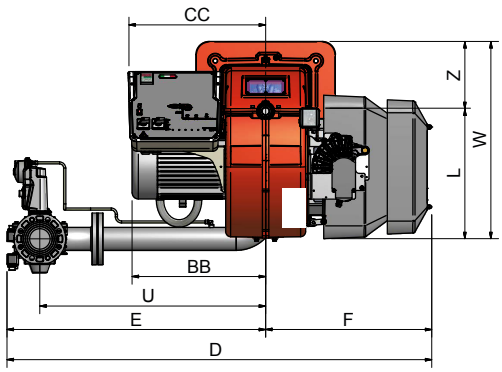

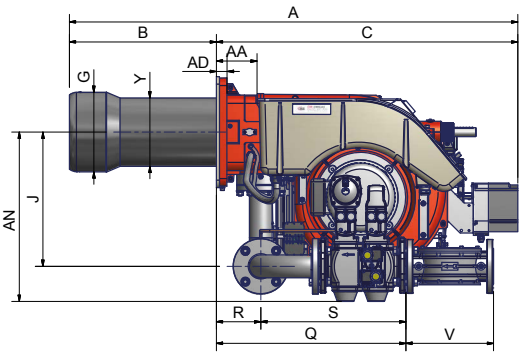

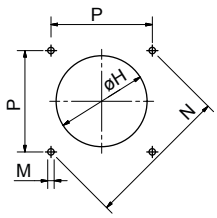

Suggested boiler drilling

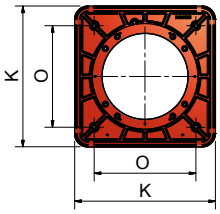

Burner flange

Type	Packaging dimensions (mm)			
	l	p	h	kg
R512A	1570	1350	1120	300
R515A	1570	1350	1120	300
R520A	1570	1350	1120	350
R525A	1720	1500	1150	400

Approximate values (regarding model with gas train DN 100)

Type	Model	Overall dimensions (mm)																											
		A	AA	AD	AN	B	BB	C	CC	D	E	F	G	H	J	K	L	M	N	O	P	Q	R	S	U	V	W	Y	Z
R512A	M-.xx.S.xx.A.1.50	1683	220	35	595	530	517	1153	532	1590	946	644	340	380	494	540	494	M14	552	390	390	763	149	614	845	190	764	328	270
R512A	M-.xx.S.xx.A.1.65	1683	220	35	611	530	517	1153	532	1613	969	644	340	380	494	540	494	M14	552	390	390	636	149	487	845	292	764	328	270
R512A	M-.xx.S.xx.A.1.80	1683	220	35	626	530	517	1153	532	1645	1002	644	340	380	494	540	494	M14	552	390	390	687	149	538	875	313	764	328	270
R512A	M-.xx.S.xx.A.1.100	1683	220	35	595	530	517	1153	532	1726	1082	644	340	380	494	540	494	M14	552	390	390	791	149	642	942	353	764	328	270
R515A	M-.xx.S.xx.A.1.50	1683	220	35	595	530	517	1153	532	1590	946	644	380	420	494	540	494	M14	552	390	390	763	149	614	845	190	764	328	270
R515A	M-.xx.S.xx.A.1.65	1683	220	35	611	530	517	1153	532	1613	969	644	380	420	494	540	494	M14	552	390	390	636	149	487	845	292	764	328	270
R515A	M-.xx.S.xx.A.1.80	1683	220	35	626	530	517	1153	532	1645	1002	644	380	420	494	540	494	M14	552	390	390	687	149	538	875	313	764	328	270
R515A	M-.xx.S.xx.A.1.100	1683	220	35	639	530	517	1153	532	1726	1082	644	380	420	494	540	494	M14	552	390	390	791	149	642	942	353	764	328	270
R520A	M-.xx.S.xx.A.1.50	1683	220	35	595	530	517	1153	532	1590	946	644	400	440	494	540	494	M14	552	390	390	755	149	614	844	190	764	328	270
R520A	M-.xx.S.xx.A.1.65	1683	220	35	611	530	517	1153	532	1613	669	644	400	440	494	540	494	M14	552	390	390	636	149	487	845	292	764	328	270
R520A	M-.xx.S.xx.A.1.80	1683	220	35	626	530	517	1153	532	1645	1002	644	400	440	494	540	494	M14	552	390	390	687	149	538	875	313	764	328	270
R520A	M-.xx.S.xx.A.1.100	1683	220	35	639	530	517	1153	532	1726	1082	644	400	440	494	540	494	M14	552	390	390	791	149	642	942	353	764	328	270
R525A	M-.xx.S.xx.A.1.65	1683	220	35	611	530	650	1153	650	1613	669	644	434	484	494	540	494	M14	552	390	390	636	149	487	845	292	764	328	270
R525A	M-.xx.S.xx.A.1.80	1683	220	35	626	530	650	1153	650	1645	1002	644	434	484	494	540	494	M14	552	390	390	687	149	538	875	313	764	328	270
R525A	M-.xx.S.xx.A.1.100	1683	220	35	639	530	650	1153	650	1726	1082	644	434	484	494	540	494	M14	552	390	390	791	149	642	942	353	764	328	270

Approximate values

MECHANICAL OPERATION

Model	Gas train	Operation	R512A Code	R512A Price €	R515A Code	R515A Price €
M-.PR.S.xx.A.1.50	2”	PR	029010153		029010553	
M-.PR.S.xx.A.1.65	DN65	PR	029010253		029010653	
M-.PR.S.xx.A.1.80	DN80	PR	029010353		029010753	
M-.PR.S.xx.A.1.100	DN100	PR	029010453		029010853	
M-.MD.S.xx.A.1.50	2”	MD(*)	029010154		029010554	
M-.MD.S.xx.A.1.65	DN65	MD(*)	029010254		029010654	
M-.MD.S.xx.A.1.80	DN80	MD(*)	029010354		029010754	
M-.MD.S.xx.A.1.100	DN100	MD(*)	029010454		029010854	

Model	Gas train	Operation	R520A Code	R520A Price €	R525A Code	R525A Price €
M-.PR.S.xx.A.1.50	2”	PR	029010953		-	
M-.PR.S.xx.A.1.65	DN65	PR	029011053		029011453	
M-.PR.S.xx.A.1.80	DN80	PR	029011153		029011553	
M-.PR.S.xx.A.1.100	DN100	PR	029011253		029011653	
M-.MD.S.xx.A.1.50	2”	MD(*)	029010954		-	
M-.MD.S.xx.A.1.65	DN65	MD(*)	029011054		029011454	
M-.MD.S.xx.A.1.80	DN80	MD(*)	029011154		029011554	
M-.MD.S.xx.A.1.100	DN100	MD(*)	029011254		029011654	

(*) In order for the supply to be completed, the burner must be equipped with the respective modulating probe (see accessory table, page 290).
In compliance with GAR DIRECTIVE 2016/426/EU.

R512A R515A R520A R525A cinquecento SERIES

ELECTRONIC OPERATION

Model	Gas train	Operation	R512A Code	R512A Price €	R515A Code	R515A Price €
M-.PR.S.xx.A.1.50.EA	2”	PR	02901015A		02901055A	
M-.PR.S.xx.A.1.65.EA	DN65	PR	02901025A		02901065A	
M-.PR.S.xx.A.1.80.EA	DN80	PR	02901035A		02901075A	
M-.PR.S.xx.A.1.100.EA	DN100	PR	02901045A		02901085A	
M-.MD.S.xx.A.1.50.EA	2”	MD(*)	02901015E		02901055E	
M-.MD.S.xx.A.1.65.EA	DN65	MD(*)	02901025E		02901065E	
M-.MD.S.xx.A.1.80.EA	DN80	MD(*)	02901035E		02901075E	
M-.MD.S.xx.A.1.100.EA	DN100	MD(*)	02901045E		02901085E	
M-.MD.S.xx.A.1.50.ES	2”	MD(*)	02901015S		02901055S	
M-.MD.S.xx.A.1.65.ES	DN65	MD(*)	02901025S		02901065S	
M-.MD.S.xx.A.1.80.ES	DN80	MD(*)	02901035S		02901075S	
M-.MD.S.xx.A.1.100.ES	DN100	MD(*)	02901045S		02901085S	

Model	Gas train	Operation	R520A Code	R520A Price €	R525A Code	R525A Price €
M-.PR.S.xx.A.1.50.EA	2”	PR	02901095A		-	
M-.PR.S.xx.A.1.65.EA	DN65	PR	02901105A		02901145A	
M-.PR.S.xx.A.1.80.EA	DN80	PR	02901115A		02901155A	
M-.PR.S.xx.A.1.100.EA	DN100	PR	02901125A		02901165A	
M-.MD.S.xx.A.1.50.EA	2”	MD(*)	02901095E		-	
M-.MD.S.xx.A.1.65.EA	DN65	MD(*)	02901105E		02901145E	
M-.MD.S.xx.A.1.80.EA	DN80	MD(*)	02901115E		02901155E	
M-.MD.S.xx.A.1.100.EA	DN100	MD(*)	02901125E		02901165E	
M-.MD.S.xx.A.1.50.ES	2”	MD(*)	02901095S		-	
M-.MD.S.xx.A.1.65.ES	DN65	MD(*)	02901105S		02901145S	
M-.MD.S.xx.A.1.80.ES	DN80	MD(*)	02901115S		02901155S	
M-.MD.S.xx.A.1.100.ES	DN100	MD(*)	02901125S		02901165S	

(*) In order for the supply to be completed, the burner must be equipped with the respective modulating probe (see accessory table, page 290).
In compliance with GAR DIRECTIVE 2016/426/EU.

R512A R515A R520A R525A

GAS

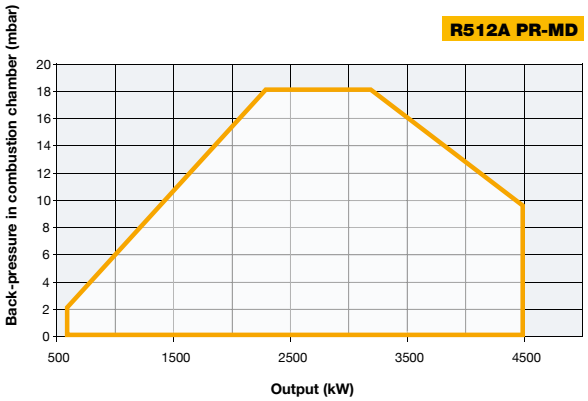

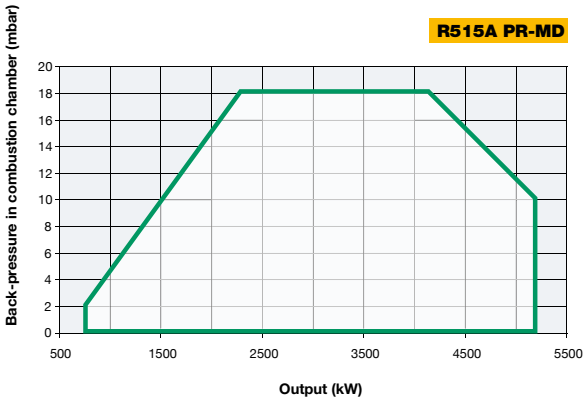

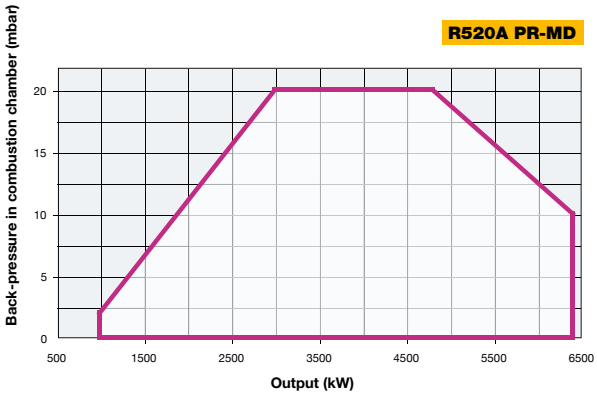

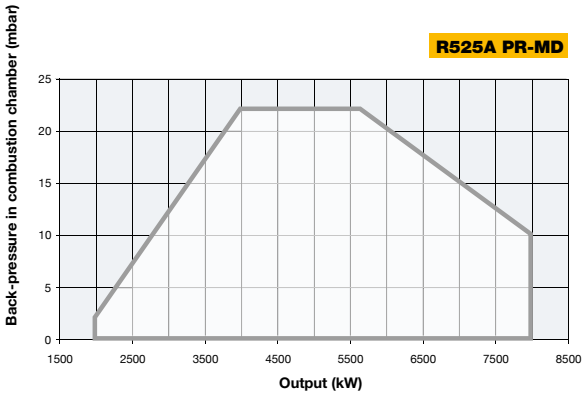

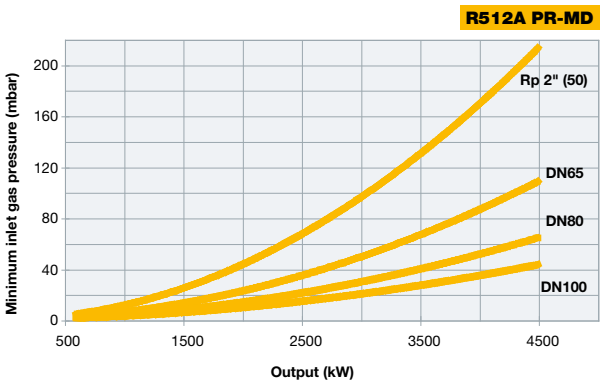

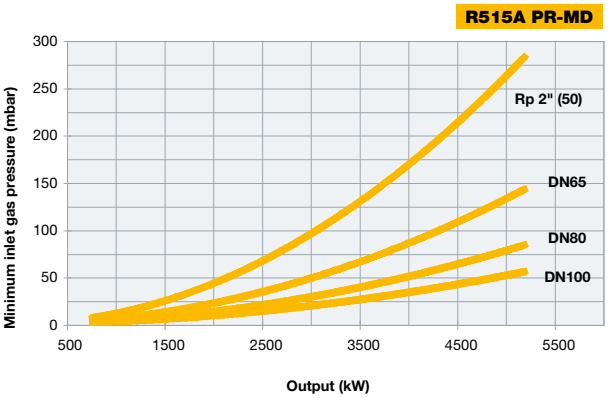

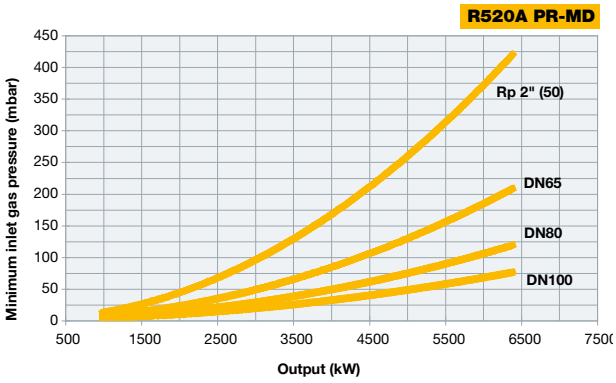

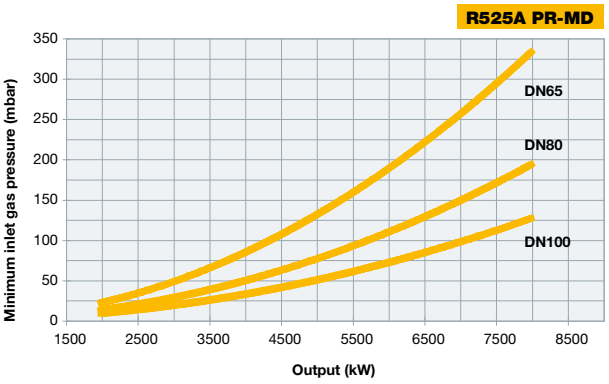

Attention: the graph shows the value of the gas output (kW) against the corresponding pressure without the combustion chamber back pressure. To know the minimum gas pressure at gas train, in order to get the gas output, it is necessary to add the boiler back pressure to the value read on the curve.

NEW

GAS

CIB UNIGAS < 120 mg/kWh CLASS 2 Low NOx

K750A K890A K990A...SR cinquecento SERIES

The new standard K type CINQUECENTO series **Low NO_x burners Class 2 (< 120 mg/kWh)**, made in aluminum housing with a backward curved centrifugal impeller is studied and developed to get high performance and efficiency combined with low emissions. This series with a maximum power of 9.900 kW, are in this selection of product that is particularly competitive. The userfriendly application and maintenance are the strengths of these burners.

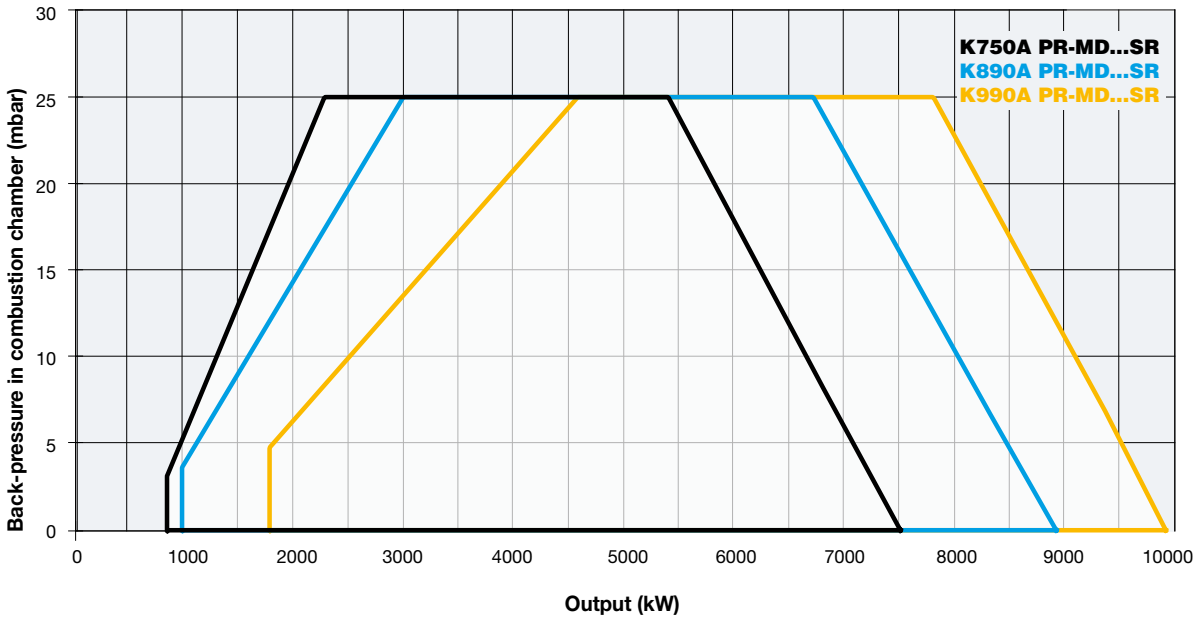

K750A K890A K990A...SR

TECHNICAL DETAILS

Type	Model	Power kW min.	Power kW max.	Auxiliary electrical power supply	Motor electrical power supply	Fan motor kW	Gas connections	Noise level dBA
K750A	M-.xx.SR.xx.A.1.xxx	880	7.500	230 V 1N AC 50 Hz	400 V 3 AC 50 Hz	15,0	DN65 - DN80 - DN100 - DN125	< 85
K890A	M-.xx.SR.xx.A.1.xxx	1.000	8.900	230 V 1N AC 50 Hz	400 V 3 AC 50 Hz	15,0	DN65 - DN80 - DN100 - DN125	< 85
K990A	M-.xx.SR.xx.A.1.xxx	1.820	9.900	230 V 1N AC 50 Hz	400 V 3 AC 50 Hz	15,0	DN80 - DN100 - DN125	< 85

For the configuration of the gas train, see pages 116-117.

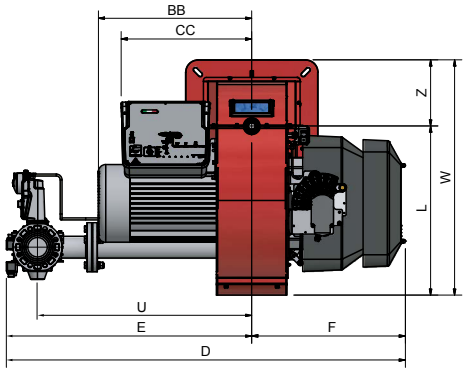

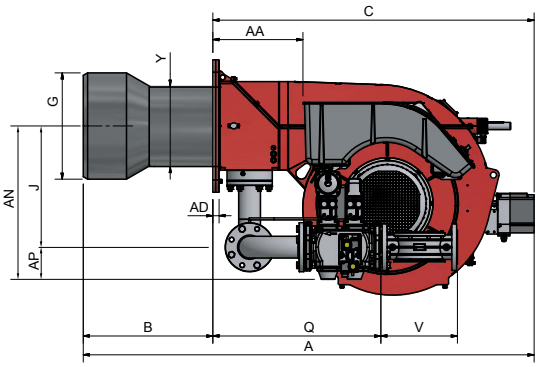

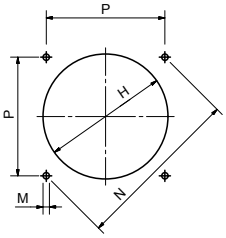

Suggested boiler drilling

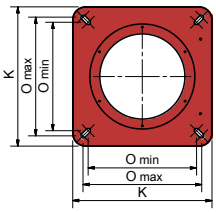

Burner flange

Type	Packaging dimensions (mm) l	p	h	kg
K750A	2040	1450	1220	475
K890A	2040	1450	1220	480
K990A	2040	1450	1220	485

Approximate values (regarding model with gas train DN 80)

Type	Model	Overall dimensions (mm) AA	A	AD	AN	AP	B	BB	C	CC	D	E	F	G	H	J	K	L	M	N	O min.	O max.	P	Q	R	S	U	V	W	Y	Z
K750A	M-.xx.SR.xx.A.1.65	366	1841	25	611	117	530	626	1311	524	1595	969	626	340	380	494	540	690	M16	651	420	460	460	636	150	487	845	292	960	328	270
K750A	M-.xx.SR.xx.A.1.80	366	1841	25	626	132	530	626	1311	524	1628	1002	626	340	380	494	540	690	M16	651	420	460	460	687	150	538	875	313	960	328	270
K750A	M-.xx.SR.xx.A.1.100	366	1841	25	639	145	530	626	1311	524	1708	1082	626	340	380	494	540	690	M16	651	420	460	460	791	150	642	942	353	960	328	270
K750A	M-.xx.SR.xx.A.1.125	366	1841	25	738	175	530	626	1311	524	1973	1347	626	340	380	562	540	690	M16	651	420	460	460	904	150	754	1192	479	960	328	270
K890A	M-.xx.SR.xx.A.1.65	366	1840	25	611	117	530	626	1310	524	1595	969	626	400	440	494	540	690	M16	651	420	460	460	636	150	487	845	292	960	328	270
K890A	M-.xx.SR.xx.A.1.80	366	1840	25	626	132	530	626	1310	524	1628	1002	626	400	440	494	540	690	M16	651	420	460	460	687	150	538	875	313	960	328	270
K890A	M-.xx.SR.xx.A.1.100	366	1840	25	639	145	530	626	1310	524	1708	1082	626	400	440	494	540	690	M16	651	420	460	460	791	150	642	942	353	960	328	270
K890A	M-.xx.SR.xx.A.1.125	366	1840	25	738	175	530	626	1310	524	1973	1347	626	400	440	562	540	690	M16	651	420	460	460	904	150	754	1192	479	960	328	270
K990A	M-.xx.SR.xx.A.1.80	366	1840	25	626	132	530	626	1310	524	1628	1002	626	434	484	494	540	690	M16	651	420	460	460	687	150	538	875	313	960	328	270
K990A	M-.xx.SR.xx.A.1.100	366	1840	25	639	145	530	626	1310	524	1708	1082	626	434	484	494	540	690	M16	651	420	460	460	791	150	642	942	353	960	328	270
K990A	M-.xx.SR.xx.A.1.125	366	1840	25	738	175	530	626	1310	524	1973	1347	626	434	484	562	540	690	M16	651	420	460	460	904	150	754	1192	479	960	328	270

Approximate values

MECHANICAL OPERATION

Model	Gas train	Operation	K750A...SR Code	K750A...SR Price €	K890A...SR Code	K890A...SR Price €
M-.PR.SR.xx.A.1.65	DN65	PR	034010153		034010553	
M-.PR.SR.xx.A.1.80	DN80	PR	034010253		034010653	
M-.PR.SR.xx.A.1.100	DN100	PR	034010353		034010753	
M-.PR.SR.xx.A.1.125	DN 125	PR	034010453		034010853	
M-.MD.SR.xx.A.1.65	DN65	MD(*)	034010154		034010554	
M-.MD.SR.xx.A.1.80	DN80	MD(*)	034010254		034010654	
M-.MD.SR.xx.A.1.100	DN100	MD(*)	034010354		034010754	
M-.MD.SR.xx.A.1.125	DN 125	MD(*)	034010454		034010854	

Model	Gas train	Operation	K990A...SR Code	K990A...SR Price €
M-.PR.SR.xx.A.1.80	DN80	PR	034010953	
M-.PR.SR.xx.A.1.100	DN100	PR	034011053	
M-.PR.SR.xx.A.1.125	DN 125	PR	034011153	
M-.MD.SR.xx.A.1.80	DN80	MD(*)	034010954	
M-.MD.SR.xx.A.1.100	DN100	MD(*)	034011054	
M-.MD.SR.xx.A.1.125	DN 125	MD(*)	034011154	

(*) In order for the supply to be completed, the burner must be equipped with the respective modulating probe (see accessory table, page 290).
In compliance with GAR DIRECTIVE 2016/426/EU.

ELECTRONIC OPERATION

Model	Gas train	Operation	K750A...SR Code	K750A...SR Price €	K890A...SR Code	K890A...SR Price €
M-.PR.SR.xx.A.1.65.EA	DN65	PR	03401015A		03401055A	
M-.PR.SR.xx.A.1.80.EA	DN80	PR	03401025A		03401065A	
M-.PR.SR.xx.A.1.100.EA	DN100	PR	03401035A		03401075A	
M-.PR.SR.xx.A.1.125.EA	DN125	PR	03401045A		03401085A	
M-.MD.SR.xx.A.1.65.EA	DN65	MD(*)	03401015E		03401055E	
M-.MD.SR.xx.A.1.80.EA	DN80	MD(*)	03401025E		03401065E	
M-.MD.SR.xx.A.1.100.EA	DN100	MD(*)	03401035E		03401075E	
M-.MD.SR.xx.A.1.125.EA	DN 125	MD(*)	03401045E		03401085E	
M-.MD.SR.xx.A.1.65.ES	DN65	MD(*)	03401015S		03401055S	
M-.MD.SR.xx.A.1.80.ES	DN80	MD(*)	03401025S		03401065S	
M-.MD.SR.xx.A.1.100.ES	DN100	MD(*)	03401035S		03401075S	
M-.MD.SR.xx.A.1.125.ES	DN 125	MD(*)	03401045S		03401085S	

Model	Gas train	Operation	K990A...SR Code	K990A...SR Price €
M-.PR.SR.xx.A.1.80.EA	DN80	PR	03401095A	
M-.PR.SR.xx.A.1.100.EA	DN100	PR	03401105A	
M-.PR.SR.xx.A.1.125.EA	DN125	PR	03401115A	
M-.MD.SR.xx.A.1.80.EA	DN80	MD(*)	03401095E	
M-.MD.SR.xx.A.1.100.EA	DN100	MD(*)	03401105E	
M-.MD.SR.xx.A.1.125.EA	DN 125	MD(*)	03401115E	
M-.MD.SR.xx.A.1.80.ES	DN80	MD(*)	03401095S	
M-.MD.SR.xx.A.1.100.ES	DN100	MD(*)	03401105S	
M-.MD.SR.xx.A.1.125.ES	DN 125	MD(*)	03401115S	

(*) In order for the supply to be completed, the burner must be equipped with the respective modulating probe (see accessory table, page 290).
In compliance with GAR DIRECTIVE 2016/426/EU.

K750A K890A K990A...SR cinquecento SERIES

K750A PR-MD...SR

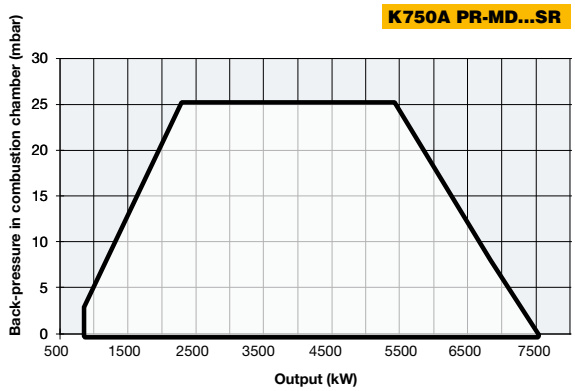

K890A PR-MD...SR

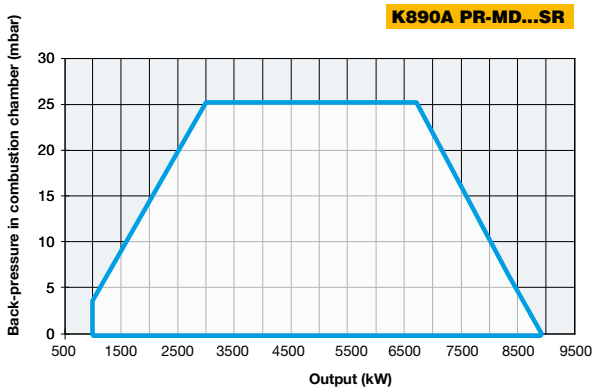

K990A PR-MD...SR

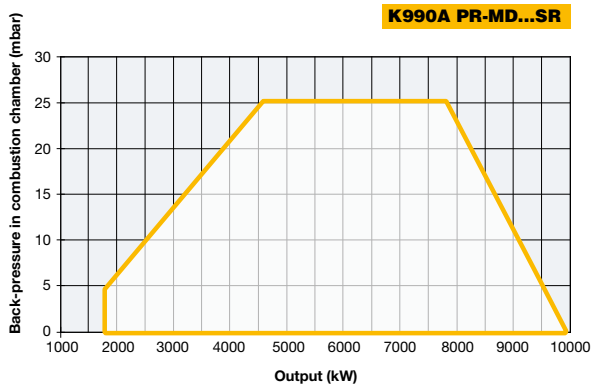

K750A PR-MD...SR

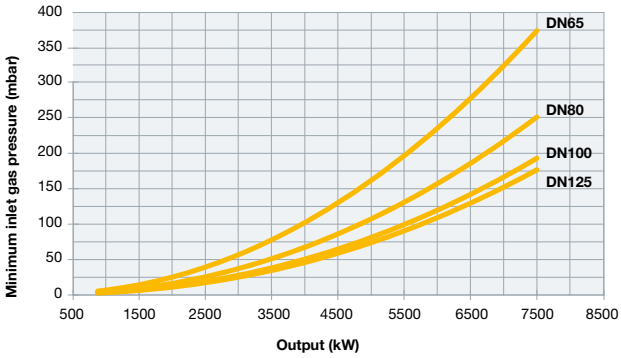

K890A PR-MD...SR

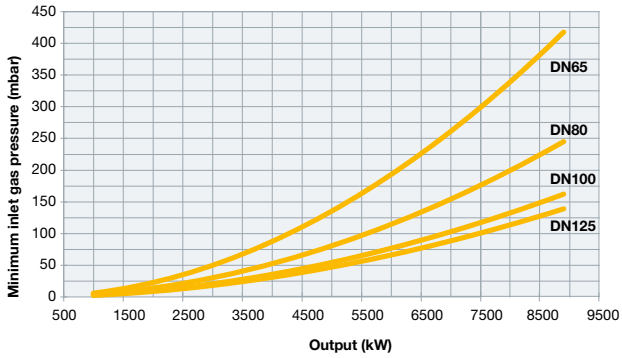

K990A PR-MD...SR

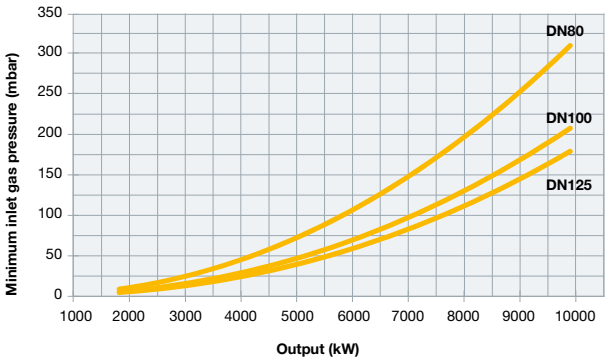

Attention: the graph shows the value of the gas output (kW) against the corresponding pressure without the combustion chamber back pressure. To know the minimum gas pressure at gas train, in order to get the gas output, it is necessary to add the boiler back pressure to the value read on the curve.

mille SERIES R1025 R1030 R1040

Designed to satisfy the most demanding industrial applications, the array "MILLE series" **Low NO_x Class 2 (< 120 mg/kWh)** is the largest of the aluminium monoblock burners. It features an aluminium housing and a backward curved centrifugal impeller. The performance range of this array of product goes from 2.550 to 13.000 kW and its modulating ratio is 1:3. Higher modulating ratio (up to 1:10) is available, upon request, in those models with mobile combustion head and electronic control unit.

Electronic set up (optional)

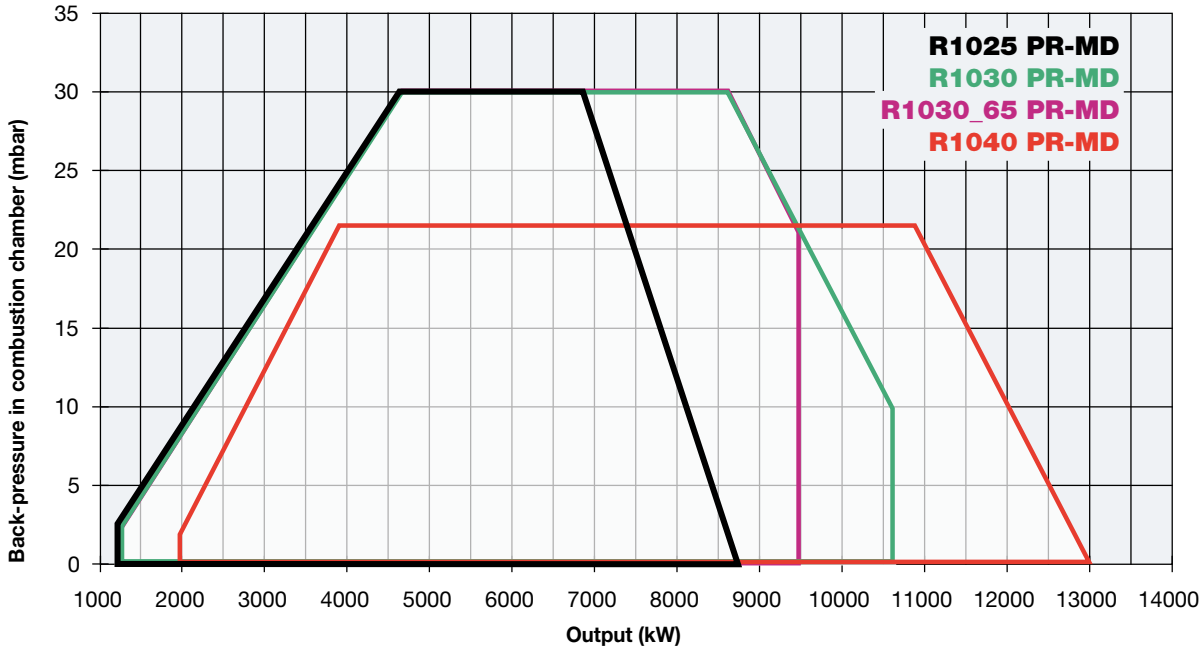

R1025 R1030 R1040 mille SERIES

TECHNICAL DETAILS

Type	Model	Power kW		Auxiliary electrical power supply	Motor electrical power supply	Fan motor	Gas connections	Noise level
		min.	max.			kW		dBA
R1025	M-.xx.S.xx.A.1.xxx	1.200	8.700	230 V 1N AC 50 Hz	400 V 3 AC 50 Hz	18,5	DN65 - DN80 - DN100	82,2
R1030	M-.xx.S.xx.A.1.65	1.200	9.500	230 V 1N AC 50 Hz	400 V 3 AC 50 Hz	22,0	DN65	85,6
R1030	M-.xx.S.xx.A.1.xxx	1.200	10.600	230 V 1N AC 50 Hz	400 V 3 AC 50 Hz	22,0	DN80 - DN100	85,6
R1040	M-.xx.S.xx.A.1.xxx	2.000	13.000	230 V 1N AC 50 Hz	400 V 3 AC 50 Hz	30,0	DN80 - DN100 - DN125	85,6

For the configuration of the gas train, see pages 116-117.

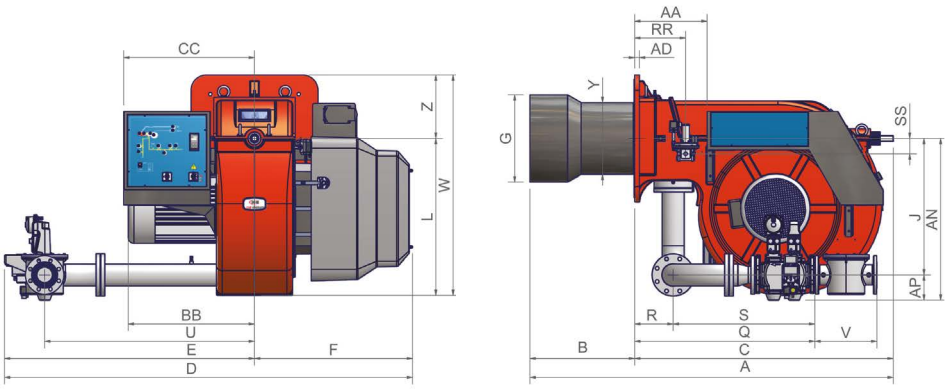

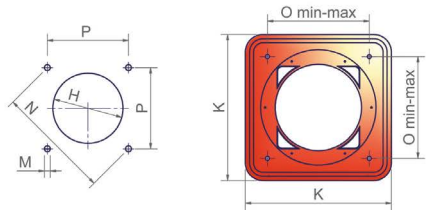

Suggested boiler drilling *Burner flange*

Type	Packaging dimensions (mm)			
	l	p	h	kg
R1025	2300	1720	1410	550
R1030	2300	1720	1410	550
R1040	2300	1720	1410	600

Approximate values

Type	Model	Overall dimensions (mm)																														
		A	AA	AD	AN	AP	B	BB	C	CC	D	E	F	G	H	J	K	L	M	N	O	P	Q	R	RR	S	SS	U	V	W	Y	Z
R1025	M-.xx.S.xx.A.1.65	1888	377	25	827	118	544	648	1291	680	2121	1299	822	400	450	709	660	816	M16	651	460	460	914	200	265	714	80	1092	292	1146	379	330
R1025	M-.xx.S.xx.A.1.80	1888	377	25	841	132	544	648	1291	680	2123	1301	822	400	450	709	660	816	M16	651	460	460	936	200	265	736	80	1092	322	1146	379	330
R1025	M-.xx.S.xx.A.1.100	1888	377	25	854	145	544	648	1291	680	2139	1317	822	400	450	709	660	816	M16	651	460	460	842	200	265	642	80	1092	382	1146	379	330
R1030	M-.xx.S.xx.A.1.65	1888	377	25	827	118	544	664	1291	680	2121	1299	822	454	504	709	660	816	M16	651	460	460	914	200	265	714	80	1092	292	1146	372	330
R1030	M-.xx.S.xx.A.1.80	1888	377	25	841	132	544	664	1291	680	2123	1301	822	454	504	709	660	816	M16	651	460	460	936	200	265	736	80	1092	322	1146	372	330
R1030	M-.xx.S.xx.A.1.100	1888	377	25	854	145	544	664	1291	680	2139	1317	822	454	504	709	660	816	M16	651	460	460	842	200	265	642	80	1092	382	1146	372	330
R1040	M-.xx.S.xx.A.1.80	1888	377	25	841	132	544	664	1291	680	2123	1301	822	514	564	709	660	816	M16	651	460	460	936	200	265	736	80	1092	322	1146	408	330
R1040	M-.xx.S.xx.A.1.100	1888	377	25	854	145	544	664	1291	680	2139	1317	822	514	564	709	660	816	M16	651	460	460	842	200	265	642	80	1092	382	1146	408	330
R1040	M-.xx.S.xx.A.1.125	1888	377	25	884	175	544	664	1291	680	2254	1432	822	514	564	709	660	816	M16	651	460	460	954	200	265	754	80	1192	480	1146	408	330

Approximate values

MECHANICAL OPERATION

Model	Gas train	Operation	R1025 Code	R1025 Price €	R1030 Code	R1030 Price €	R1040 Code	R1040 Price €
M-.PR.S.xx.A.1.65	DN65	PR	023011953		023012253		-	
M-.PR.S.xx.A.1.80	DN80	PR	023012053		023012353		023012553	
M-.PR.S.xx.A.1.100	DN100	PR	023012153		023012453		023012653	
M-.PR.S.xx.A.1.125	DN125	PR	-		-		023012753	
M-.MD.S.xx.A.1.65	DN65	PR	023011954		023012254		-	
M-.MD.S.xx.A.1.80	DN80	MD(*)	023012054		023012354		023012554	
M-.MD.S.xx.A.1.100	DN100	MD(*)	023012154		023012454		023012654	
M-.MD.S.xx.A.1.125	DN125	MD(*)	-		-		023012754	

(*) In order for the supply to be completed, the burner must be equipped with the respective modulating probe (see accessory table, page 290).
In compliance with GAR DIRECTIVE 2016/426/EU.

ELECTRONIC OPERATION

Model	Gas train	Operation	R1025 Code	R1025 Price €	R1030 Code	R1030 Price €	R1040 Code	R1040 Price €
M-.PR.S.xx.A.1.65.EA	DN65	PR	02301195A		02301225A		-	
M-.PR.S.xx.A.1.80.EA	DN80	PR	02301205A		02301235A		02301255A	
M-.PR.S.xx.A.1.100.EA	DN100	PR	02301215A		02301245A		02301265A	
M-.PR.S.xx.A.1.125.EA	DN125	PR	-		-		02301275A	
M-.MD.S.xx.A.1.65.EA	DN65	PR	02301195E		02301225E		-	
M-.MD.S.xx.A.1.80.EA	DN80	MD(*)	02301205E		02301235E		02301255E	
M-.MD.S.xx.A.1.100.EA	DN100	MD(*)	02301215E		02301245E		02301265E	
M-.MD.S.xx.A.1.125.EA	DN125	MD(*)	-		-		02301275E	
M-.MD.S.xx.A.1.65.ES	DN65	PR	02301025S		02301065S		-	
M-.MD.S.xx.A.1.80.ES	DN80	MD(*)	02301035S		02301075S		02301145S	
M-.MD.S.xx.A.1.100.ES	DN100	MD(*)	02301045S		02301085S		02301155S	
M-.MD.S.xx.A.1.125.ES	DN125	MD(*)	-		-		02301165S	

(*) In order for the supply to be completed, the burner must be equipped with the respective modulating probe (see accessory table, page 290).
In compliance with GAR DIRECTIVE 2016/426/EU.

R1025 R1030 R1040 mille SERIES

R1025 PR-MD

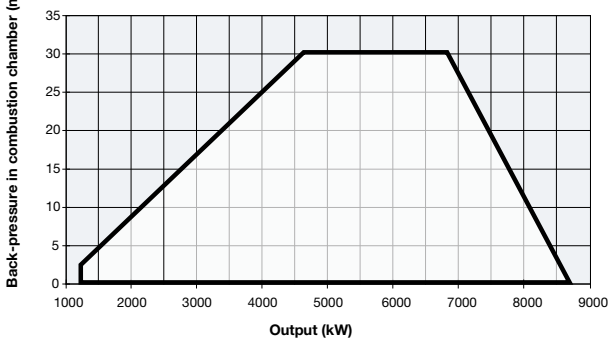

R1030 PR-MD..1.65

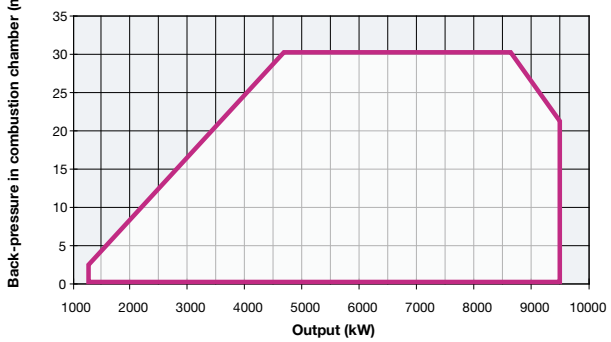

R1030 PR-MD

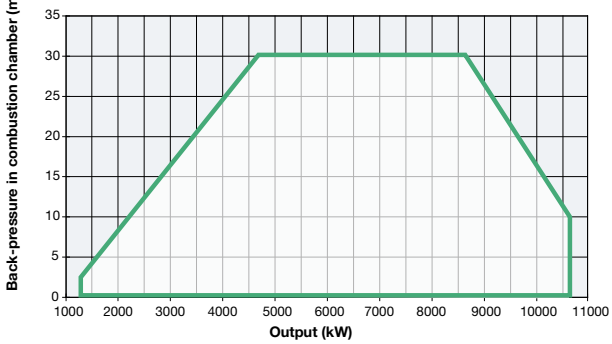

R1040 PR-MD

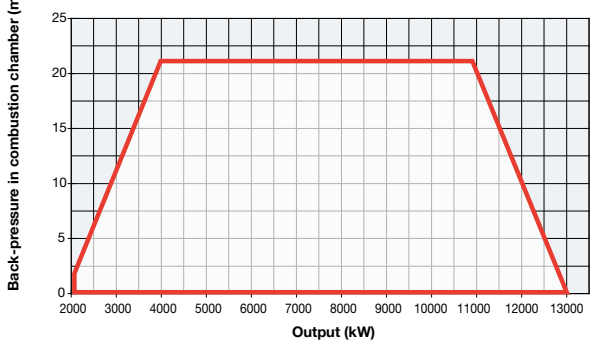

R1025 PR-MD

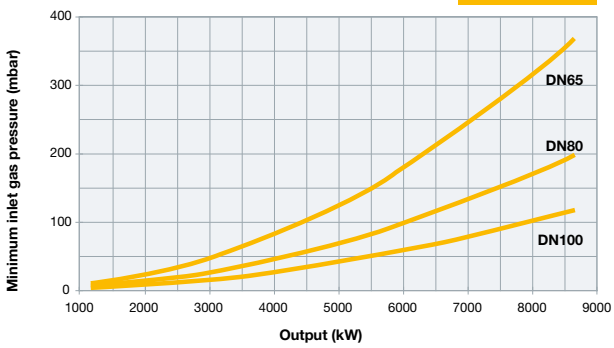

R1030 PR-MD...1.65

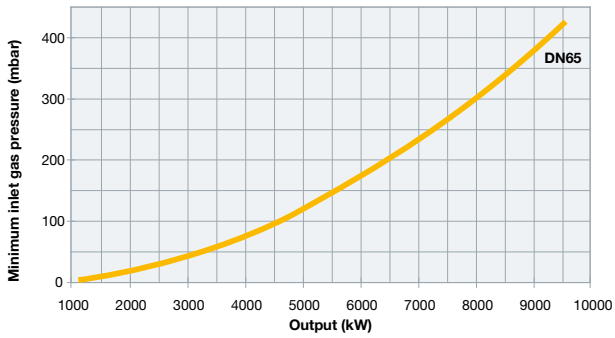

R1030 PR-MD

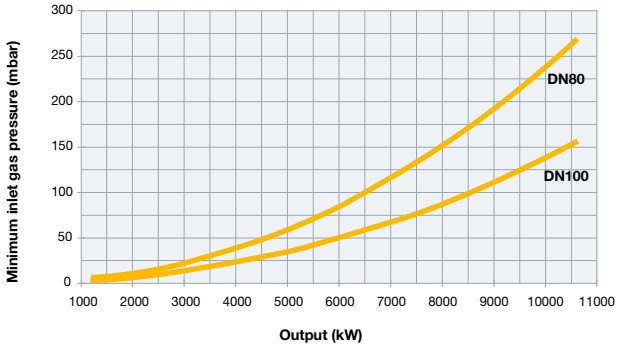

R1040 PR-MD

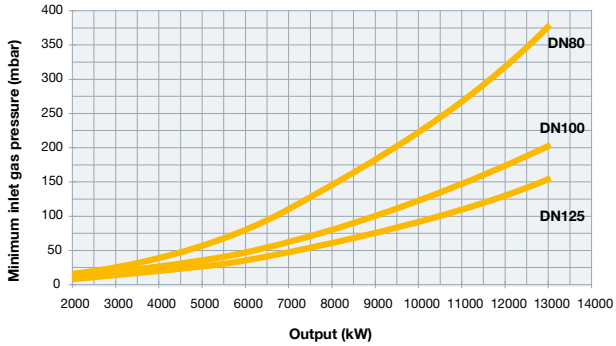

Attention: the graph shows the value of the gas output (kW) against the corresponding pressure without the combustion chamber back pressure. To know the minimum gas pressure at gas train, in order to get the gas output, it is necessary to add the boiler back pressure to the value read on the curve.

mille SERIES N1060A N1300A...SR

NEW

CIB UNIGAS < 120 mg/kWh CLASS 2 Low NOx

GAS

The new standard N type MILLE series **Low NO_x burners Class 2 (< 120 mg/kWh)**, made in aluminum housing with a backward curved centrifugal impeller is studied and developed to get high performance and efficiency combined with low emissions.
The performance range of this array of product goes from 2.550 to 13.000 kW and its modulating ratio is 1:3. Higher modulating ratio (up to 1:10) is available, upon request, in those models with mobile combustion head and electronic control unit.

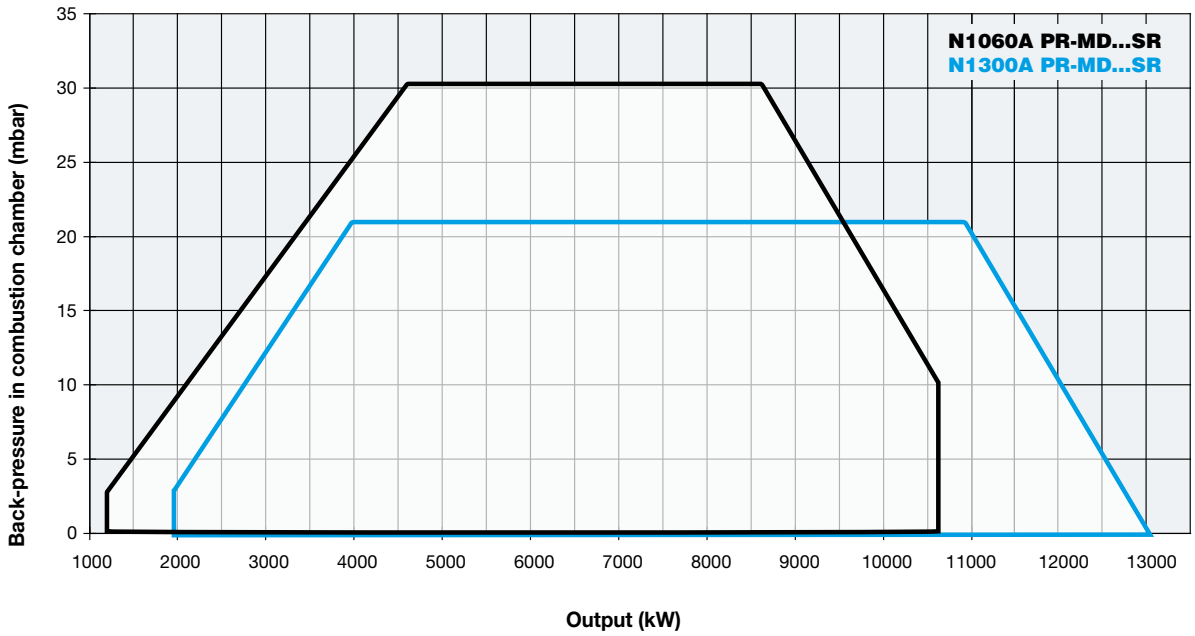

N1060A N1300A...SR mille SERIES

TECHNICAL DETAILS

Type	Model	Power kW		Auxiliary electrical power supply	Motor electrical power supply	Fan motor	Gas connections	Noise level
		min.	max.			kW		dBA
N1060A	M-.xx.SR.xx.A.1.xxx	1.200	10.600	230 V 1N AC 50 Hz	400 V 3 AC 50 Hz	22,0	DN80 - DN100 - DN125	< 85,6
N1300A	M-.xx.SR.xx.A.1.xxx	2.000	13.000	230 V 1N AC 50 Hz	400 V 3 AC 50 Hz	30,0	DN80 - DN100 - DN125	< 85,6

For the configuration of the gas train, see pages 116-117.

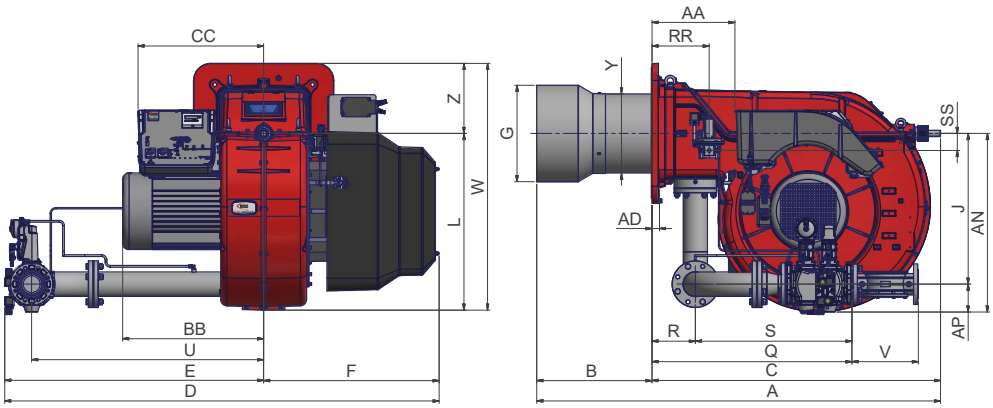

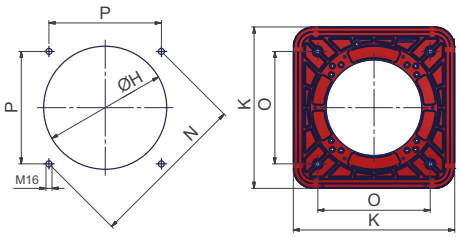

Suggested boiler drilling *Burner flange*

Type	Packaging dimensions (mm)			
	l	p	h	kg
N1060A	2300	1720	1410	550
N1300A	2300	1720	1410	600

Approximate values (regarding model with gas train DN 100)

Type	Model	Overall dimensions (mm)																											
		AA	A	AD	AN	AP	B	BB	C	CC	D	E	F	G	H	J	K	L	M	N	O		P	Q	R	S	U	V	W	Y	Z
																					min.	max.									
N1060A	M-.xx.SR.xx.A.1.80	384	1900	35	841	132	542	664	1358	684	1842	1219	623	489	539	709	660	831	M16	651	460	460	460	944	204	740	1092	310	1161	399	330
N1060A	M-.xx.SR.xx.A.1.100	384	1900	35	854	145	542	664	1358	684	1858	1235	623	489	539	709	660	831	M16	651	460	460	460	848	204	644	1092	350	1161	399	330
N1060A	M-.xx.SR.xx.A.1.125	384	1900	35	884	175	542	664	1358	684	1972	1349	623	489	539	709	660	831	M16	651	460	460	460	958	204	754	1192	478	1161	399	330
N1300A	M-.xx.SR.xx.A.1.80	390	1908	35	841	132	542	664	1366	684	1842	1219	623	489	539	709	660	831	M16	651	460	460	460	944	204	740	1092	310	1161	399	330
N1300A	M-.xx.SR.xx.A.1.100	390	1908	35	854	145	542	664	1366	684	1858	1235	623	489	539	709	660	831	M16	651	460	460	460	848	204	644	1092	350	1161	399	330
N1300A	M-.xx.SR.xx.A.1.125	390	1908	35	884	175	542	664	1366	684	1972	1349	623	489	539	709	660	831	M16	651	460	460	460	958	204	754	1192	478	1161	399	330

Approximate values

MECHANICAL OPERATION

Model	Gas train	Operation	N1060A...SR Code	N1060A...SR Price €	N1300A...SR Code	N1300A...SR Price €
M-.PR.SR.xx.A.1.80	DN80	PR	023013753		023014053	
M-.PR.SR.xx.A.1.100	DN100	PR	023013853		023014153	
M-.PR.SR.xx.A.1.125	DN 125	PR	023013953		023014253	
M-.MD.SR.xx.A.1.80	DN80	MD(*)	023013754		023014054	
M-.MD.SR.xx.A.1.100	DN100	MD(*)	023013854		023014154	
M-.MD.SR.xx.A.1.125	DN 125	MD(*)	023013954		023014254	

(*) In order for the supply to be completed, the burner must be equipped with the respective modulating probe (see accessory table, page 290).
In compliance with GAR DIRECTIVE 2016/426/EU.

ELECTRONIC OPERATION

Model	Gas train	Operation	N1060A...SR Code	N1060A...SR Price €	N1300A...SR Code	N1300A...SR Price €
M-.PR.SR.xx.A.1.80.EA	DN80	PR	02301375A		02301405A	
M-.PR.SR.xx.A.1.100.EA	DN100	PR	02301385A		02301415A	
M-.PR.SR.xx.A.1.125.EA	DN125	PR	02301395A		02301425A	
M-.MD.SR.xx.A.1.80.EA	DN80	MD(*)	02301375E		02301405E	
M-.MD.SR.xx.A.1.100.EA	DN100	MD(*)	02301385E		02301415E	
M-.MD.SR.xx.A.1.125.EA	DN 125	MD(*)	02301395E		02301425E	
M-.MD.SR.xx.A.1.80.ES	DN80	MD(*)	02301375S		02301405S	
M-.MD.SR.xx.A.1.100.ES	DN100	MD(*)	02301385S		02301415S	
M-.MD.SR.xx.A.1.125.ES	DN 125	MD(*)	02301395S		02301425S	

(*) In order for the supply to be completed, the burner must be equipped with the respective modulating probe (see accessory table, page 290).
In compliance with GAR DIRECTIVE 2016/426/EU.

N1060A N1300A...SR mille SERIES

N1060A PR-MD...SR

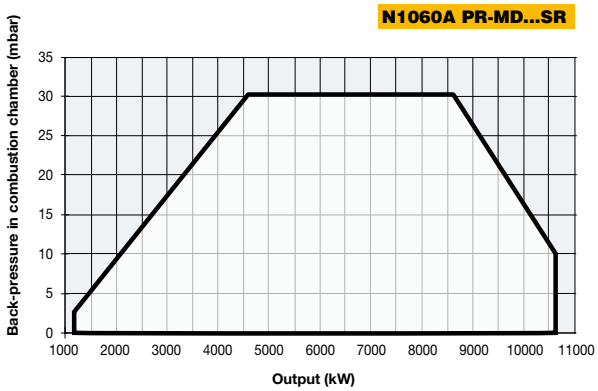

N1300A PR-MD...SR

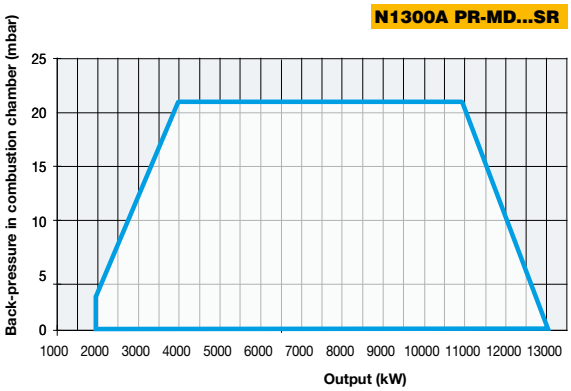

N1060A PR-MD...SR

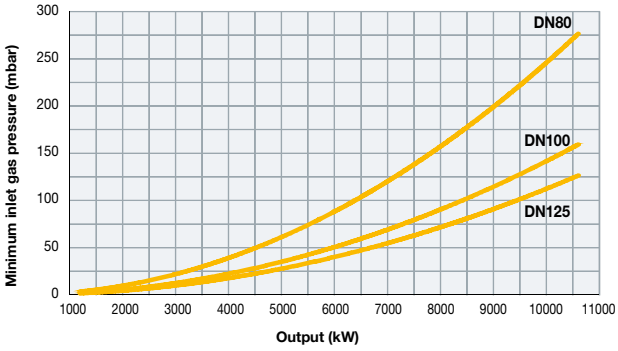

N1300A PR-MD...SR

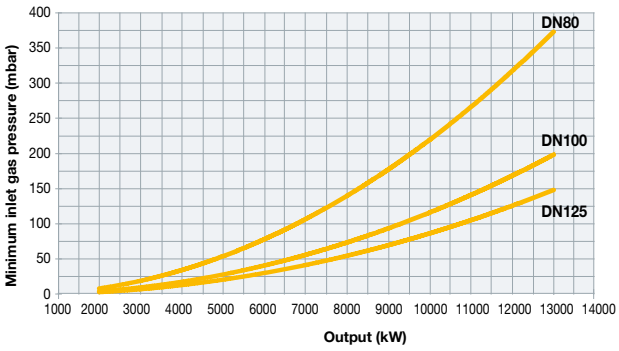

Attention: the graph shows the value of the gas output (kW) against the corresponding pressure without the combustion chamber back pressure. To know the minimum gas pressure at gas train, in order to get the gas output, it is necessary to add the boiler back pressure to the value read on the curve.

duemila SERIES R2050 R2060 R2080

GAS

Designed to satisfy the most demanding industrial applications, the array “DUEMILA series” **Class 2 (< 120 mg/kWh**) is the largest of the aluminium monoblock burnersburners; it features an steel housing and a backward curved centrifugal impeller. The performance range of this array of product goes from 2.500 to 19.000 kW and its modulating ratio is 1:3. Higher modulating ratio (up to 1:10) is available, upon request, in those models with mobile combustion head and electronic control unit.

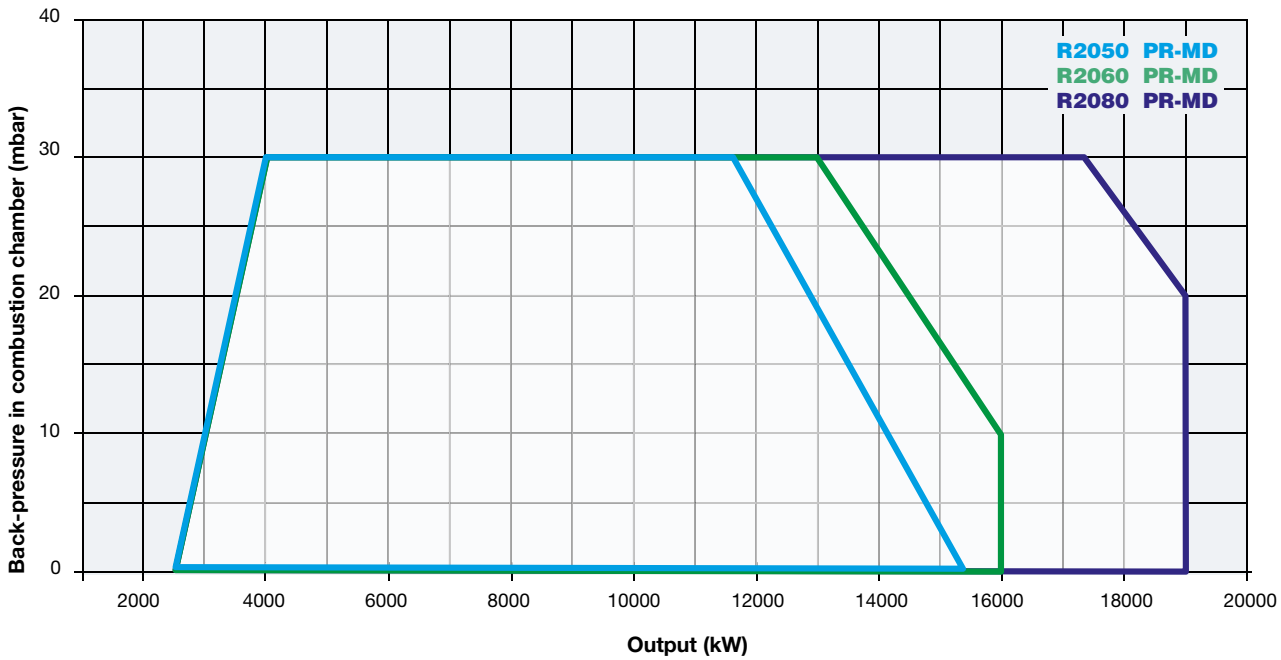

R2050 R2060 R2080 duemila SERIES

TECHNICAL DETAILS

Type	Model	Power kW		Auxiliary electrical power supply	Motor electrical power supply	Fan motor	Gas connections	Noise level
		min.	max.			kW		dBA
R2050	M-.xx.S.xx.A.1.xxx	2.500	15.200	230 V 1N AC 50 Hz	400 V 3 AC 50 Hz	37,0	DN80 - DN100 - DN125	92,5
R2060	M-.xx.S.xx.A.1.xxx	2.500	16.000	230 V 1N AC 50 Hz	400 V 3 AC 50 Hz	45,0	DN80 - DN100 - DN125	91,7
R2080	M-.xx.S.xx.A.1.xxx	2.500	19.000	230 V 1N AC 50 Hz	400 V 3 AC 50 Hz	55,0	DN100 - DN125	91,7

For the configuration of the gas train, see pages 116-117.

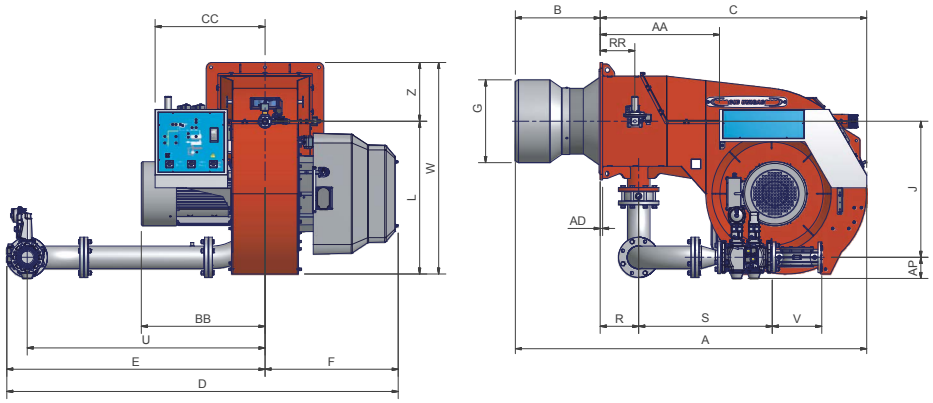

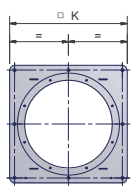

Burner flange

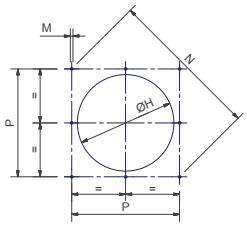

Suggested boiler drilling

Type	Packaging dimensions (mm)			
	l	p	h	kg
R2050	2396	1886	1969	1280
R2060	2396	1886	1969	1360
R2080	2396	1886	1969	1460

Approximate values

Type	Model	Overall dimensions (mm)																									
		AA	A	AD	AP	BB	B*	C	CC	D	E	F	G*	H*	J	K	L	M	N	P	R	RR	S	U	V	W	Z
R2050	M-.xx.S.xx.A.1.80	741	2180	15	132	768	520	1660	735	2431	1604	827	514	564	845	730	949	M16	948	670	239	215	827	1478	310	1314	365
R2050	M-.xx.S.xx.A.1.100	741	2180	15	145	768	520	1660	735	2447	1620	827	514	564	845	730	949	M16	948	670	239	215	874	1478	350	1314	365
R2050	M-.xx.S.xx.A.1.125	741	2180	15	175	768	520	1660	735	2461	1634	827	514	564	845	730	949	M16	948	670	239	215	755	1478	480	1314	365
R2060	M-.xx.S.xx.A.1.80	741	2160	15	132	768	500	1660	735	2431	1604	827	550	600	845	730	949	M16	948	670	239	215	827	1478	310	1314	365
R2060	M-.xx.S.xx.A.1.100	741	2160	15	145	768	500	1660	735	2447	1620	827	550	600	845	730	949	M16	948	670	239	215	874	1478	350	1314	365
R2060	M-.xx.S.xx.A.1.125	741	2160	15	175	768	500	1660	735	2461	1634	827	550	600	845	730	949	M16	948	670	239	215	755	1478	480	1314	365
R2080	M-.xx.S.xx.A.1.100	741	2160	15	132	807	520	1656	735	2309	1463	846	700	750	775	850	949	M16	1117	790	239	215	827	1336	310	1374	425
R2080	M-.xx.S.xx.A.1.125	741	2160	15	145	807	520	1656	735	2325	1479	846	700	750	775	850	949	M16	1117	790	239	215	874	1336	350	1374	425

* The B, H, G dimensions must be confirmed from our DPT.
Approximate values

Monoblock burners 2000 series are supplied complete with a steel supporting frame: burner installation and manutention are greatly simplified.
The frame is equipped with wheels to easily move the burner, and its height is adjustable to match any type of boiler or furnace.

SUPPORTING FRAME FOR BURNERS 2050 SERIES

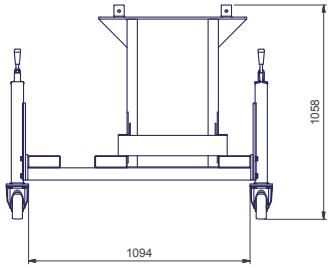

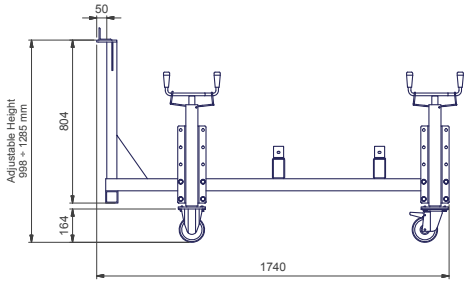

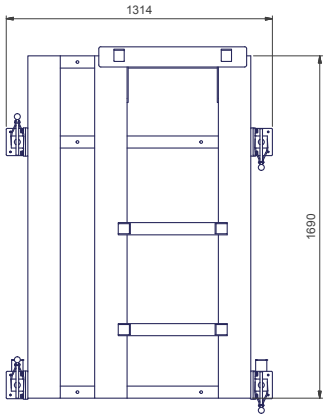

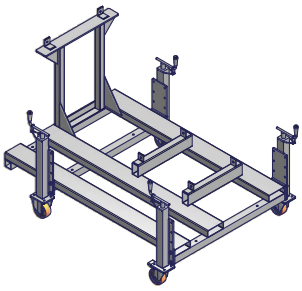

SUPPORTING FRAME FOR BURNERS 2060/2080 SERIES

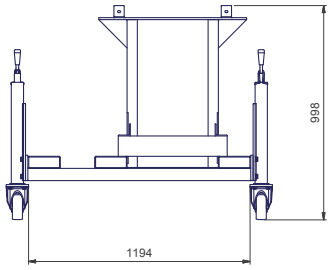

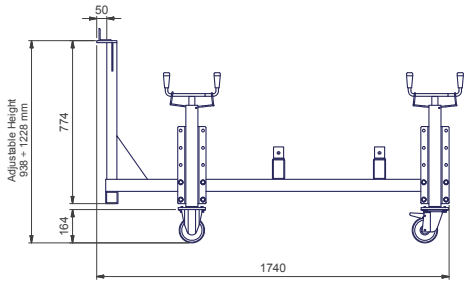

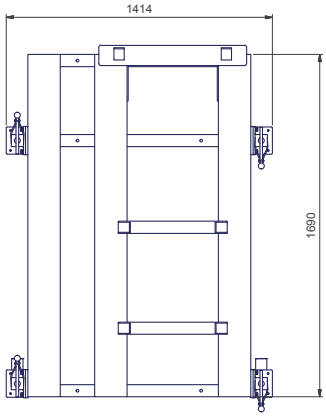

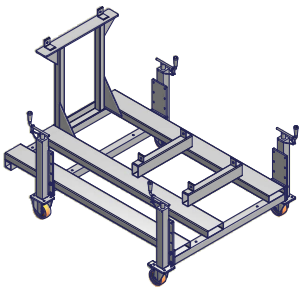

ELECTRONIC OPERATION

Model	Gas train	Operation	R2050		R2060		R2080	
			Code	Price €	Code	Price €	Code	Price €
M-.PR.S.xx.A.1.80.EA	DN80	PR	03201015A		-		-	
M-.PR.S.xx.A.1.100.EA	DN100	PR	03201025A		-		-	
M-.PR.S.xx.A.1.125.EA	DN125	PR	03201035A		-		-	
M-.MD.S.xx.A.1.80.EA	DN80	MD(*)	03201015E		-		-	
M-.MD.S.xx.A.1.100.EA	DN100	MD(*)	03201025E		-		-	
M-.MD.S.xx.A.1.125.EA	DN125	MD(*)	03201035E		-		-	
M-.MD.S.xx.A.1.80.ES	DN80	MD(*)	03201015S		03201045S		-	
M-.MD.S.xx.A.1.100.ES	DN100	MD(*)	03201025S		03201055S		03201085S	
M-.MD.S.xx.A.1.125.ES	DN125	MD(*)	03201035S		03201065S		03201095S	

(*) In order for the supply to be completed, the burner must be equipped with the respective modulating probe (see accessory table, page 290).
In compliance with GAR DIRECTIVE 2016/426/EU.

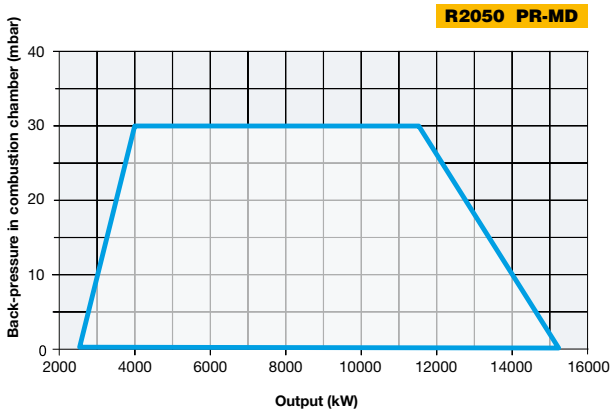

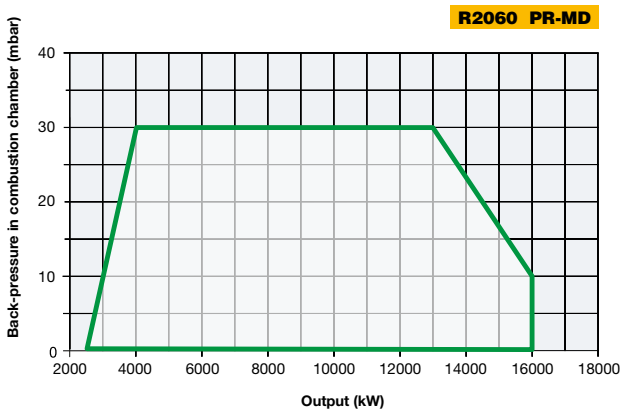

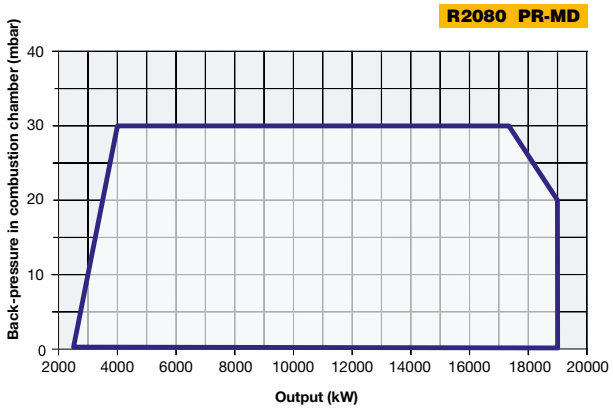

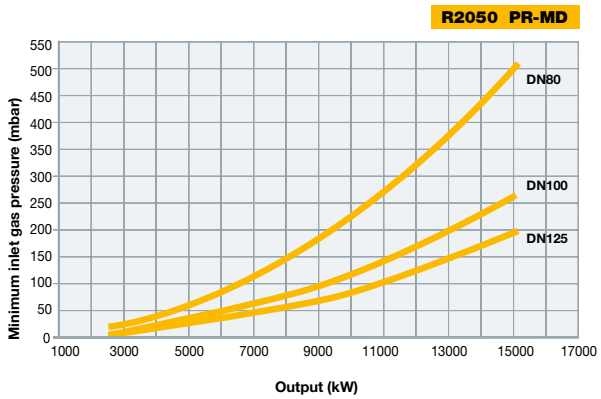

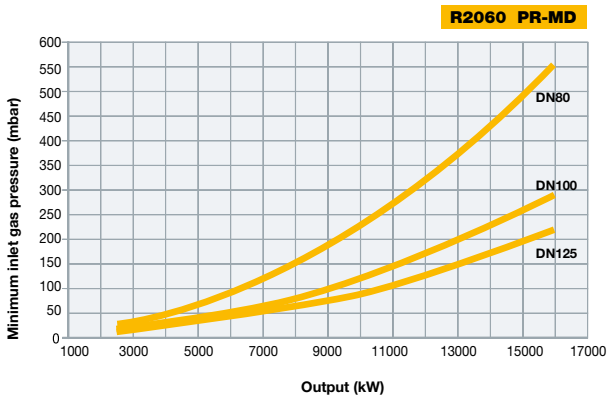

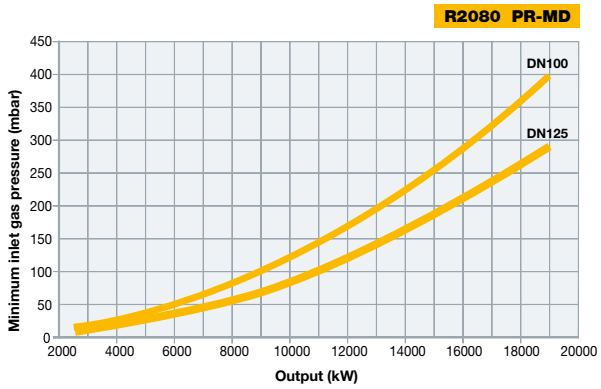

Attention: the graph shows the value of the gas output (kW) against the corresponding pressure without the combustion chamber back pressure. To know the minimum gas pressure at gas train, in order to get the gas output, it is necessary to add the boiler back pressure to the value read on the curve.

CIB UNIGAS
Let's light up tomorrow

CIB UNIGAS and its mission: Natural gas low NOx burners (natural gas only)

Real progress is based on the distribution of the advantages it brings, among which are included the improvement of the living standards and the protection of the environment. Well-aware of the vital role it plays in the development of ecologically compatible products and thanks to forty years of experience in the design and in the manufacturing of burners for civil and industrial applications, CIB UNIGAS S.P.A. ranks among the European leaders of its sector. The continuous investment in the development of technologically advanced products, which takes place in the company research laboratory, has allowed the creation of special burners which are suited to applications demanding the lowest NOx emissions. These burners homologated with

the CE Mark (Gas Appliances Directive), by one of the most authoritative European certification agencies in the sector, embrace the entire range of our products, from burners for civil application (20 kW) up to burners for industrial application (15 MW).
Our expert technicians, specialized and dedicated to the implementation of these products, have capitalized on the experience accumulated over years in the field of standard burners (with normal emission) in order to create a parallel range of low environmental impact burners. **In addition to the scrupulous respect of the limits prescribed by the European directives regulating the pollutant emissions, all these models guarantee values well below those limits; reaching a level of emissions of less than 80 mg/KWh (class 3 EN 676) if CIB UNIGAS's recommendation about boiler thermal load value is respected.** Our low NOx burners benefit from the installation of an innovative combustion head that re-distributes the gaseous element according to different weights and in negative pressure zone, in this way letting a part of the combusted gases to circulate freely inside.
The applications in which these emission values are required vary widely, such as for example in the systems used for cultivation in greenhouses. Thanks to the special combustion head of our burners, the combustion fumes can be used for the injection of the CO_2 required for the growth

of plants into the greenhouses without the risk of CO emissions that are dangerous for the personnel working inside.
Our burners can be equipped with the most modern automatic mechanical or electronic modulation system which allows the correct gas/air ratio. In this way, the burners' thermal load can be adapted with precision to the heat required at every moment of the operation, thus optimizing the performance. The electronic modulation system makes perfect use of the fuel/combustion air curve, which proves to be wider than the curve obtained by mechanical modulation system. As a consequence the electronic system is faster, timely and optimal in

CIB UNIGAS
< 80 mg/kWh
CLASS 3
Low NOx

the adjustment phase. In addition, thanks to the presence of a microprocessor that controls the various phases of the process, it is ensured the absolute precision in the repetition of the operation sequences. The reliability of this product, that has been proven by the close cooperation with some of the most important European boiler manufactures, coupled with the company's remarkable versatility, allow us to supply the widest and most complete offer of low pollutant emission burners for the satisfaction of the most particular and specific consumers' requests.
Precisely due to the particularity of the applications for which they have been designed, low NOx burners require specific technical skills and experience that CIB UNIGAS S.p.A. is happy to provide through its technical assistance that operates around the world and that is regularly re-trained through courses held at the company's headquarters.
Far from representing mere compliance to the latest standards and regulations or the exclusive consequence of marketing logic, these results have been achieved as part of our mission to improve standards of living because we believe our natural environment to be much more than just an abstract concept and more precisely, the home of our present and future.

LOW NO_x NATURAL GAS BURNERS

novanta series

RX92R - PR/MD
RX92.1 - PR/MD

NEW **novanta series**

G215X - PR/MD...xR
G250X - PR/MD...xR
G300X - PR/MD...xR

NEW **cinquecento series**

H365X - PR/MD...xR
H440X - PR/MD...xR
H500X - PR/MD...xR

NEW **cinquecento series**

K590X - PR/MD...xR
K750X - PR/MD...xR

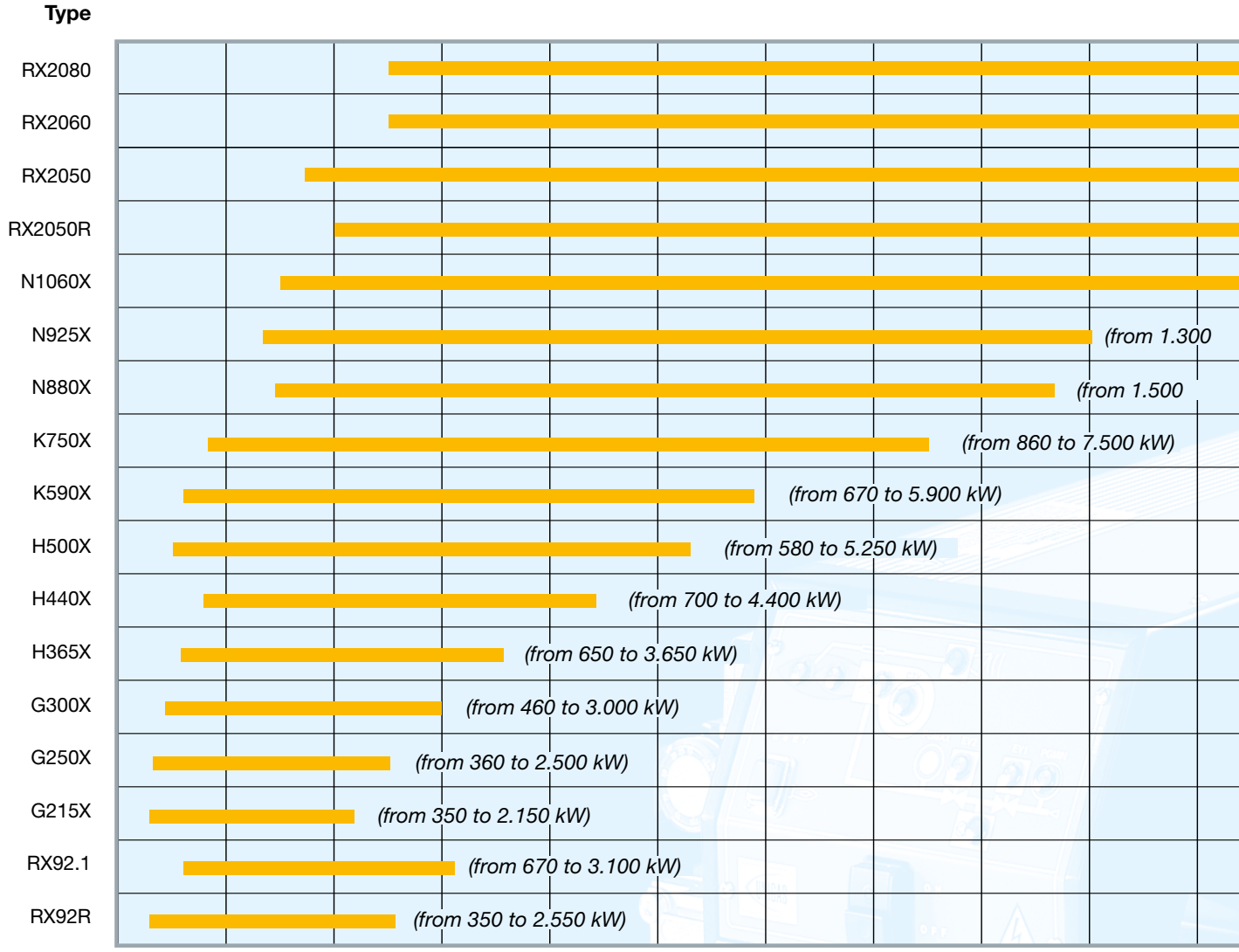

NEW mille series	duemila series
N880X - PR/MD...xR	**RX2050R** - PR/MD
N925X - PR/MD...xR	**RX2050** - PR/MD
N1060X - PR/MD...xR	**RX2060** - PR/MD
	RX2080 - PR/MD

novanta SERIES RX92R RX92.1

GAS

The series NOVANTA **Low NO_x Class 3 (< 80 mg/kWh)** have been developed to meet the current and future requests regarding the low emissions of NO_x.
The innovation of the combustion head allows to achieve substantial improvements in terms of emissions reduction, flame stability and reliability.
The perfect mix of air/gas within the combustion head of these burners, guarantees a very uniform flame in all working conditions.

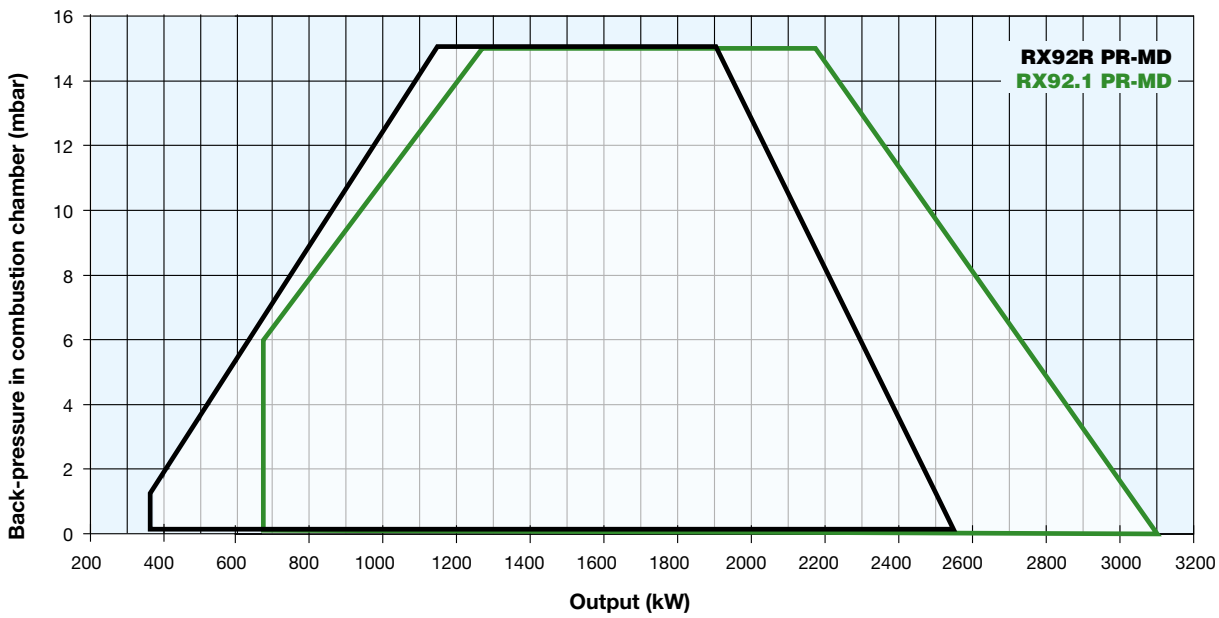

TECHNICAL DETAILS

Type	Model	Power kW		Auxiliary electrical power supply	Motor electrical power supply	Fan motor	Gas connections	Noise level
		min.	max.			kW	Rp	dBA
RX92R	M-.xx.x.xx.A.1.xxx	350	2.550	230 V 1N AC 50 Hz	400 V 3 AC 50 Hz	7,5	2” - DN65 - DN80 - DN100	74,5
RX92.1	M-.xx.x.xx.A.1.xxx	670	3.100	230 V 1N AC 50 Hz	400 V 3 AC 50 Hz	7,5	2” - DN65 - DN80 - DN100	76,9

For the configuration of the gas train, see pages 116-117.

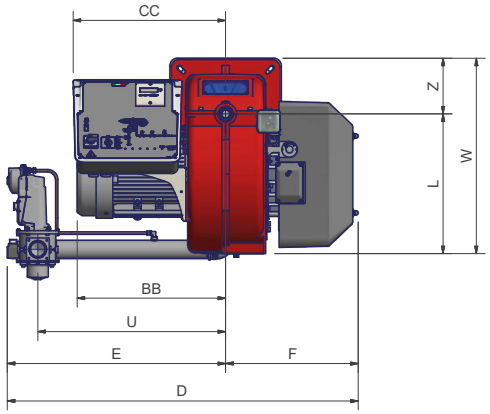

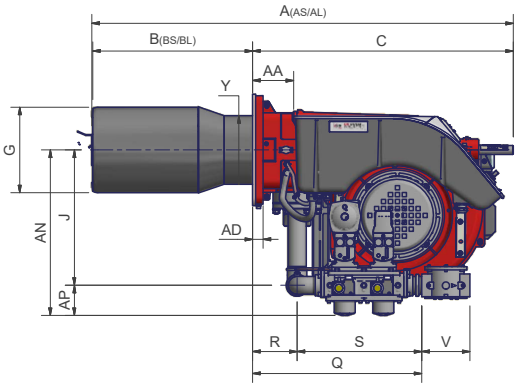

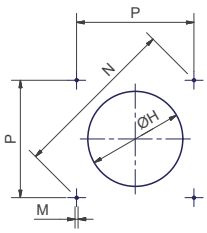

Suggested boiler drilling

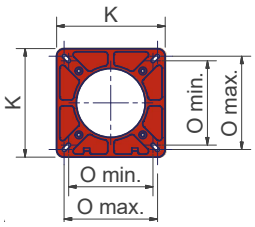

Burner flange

Type	Packaging dimensions (mm)			
	l	p	h	kg
RX92R	1.680	1.080	1.080	260
RX92.1	1.680	1.080	1.080	270

Approximate values

Type	Model	Overall dimensions (mm)																														
		AS	AL	AA	AD	AN	AP	BS	BL	BB	C	CC	D	E	F	G	H	J	K	L	M	N	O min.	O max.	P	Q	R	S	U	V	W	Y	Z
RX92R	M-.xx.x.xx.A.1.50	1261	1361	135	35	550	100	390	490	493	871	506	1160	725	435	259	289	450	360	464	M12	424	280	310	300	532	148	384	624	190	649	228	185
RX92R	M-.xx.x.xx.A.1.65	1261	1361	135	35	564	117	390	490	493	871	506	1406	971	435	259	289	447	360	464	M12	424	280	310	300	632	148	484	846	292	649	228	185
RX92R	M-.xx.x.xx.A.1.80	1261	1361	135	35	579	132	390	490	493	871	506	1437	1002	435	259	289	447	360	464	M12	424	280	310	300	683	148	535	875	313	649	228	185
RX92R	M-.xx.x.xx.A.1.100	1261	1361	135	35	592	145	390	490	493	871	506	1520	1085	435	259	289	447	360	464	M12	424	280	310	300	790	148	642	942	353	649	228	185
RX92.1	M-.xx.x.xx.A.1.50	1300	1400	135	35	550	100	420	530	493	866	506	1165	725	440	284	314	450	360	464	M12	424	280	310	300	532	148	384	624	190	649	228	185
RX92.1	M-.xx.x.xx.A.1.65	1300	1400	135	35	564	117	420	530	493	866	506	1411	971	440	284	314	447	360	464	M12	424	280	310	300	632	148	484	846	292	649	228	185
RX92.1	M-.xx.x.xx.A.1.80	1300	1400	135	35	579	132	420	530	493	866	506	1442	1002	440	284	314	447	360	464	M12	424	280	310	300	683	148	535	875	313	649	228	185
RX92.1	M-.xx.x.xx.A.1.100	1300	1400	135	35	592	145	420	530	493	866	506	1525	1085	440	284	314	447	360	464	M12	424	280	310	300	790	148	642	942	353	649	228	185

Approximate values

ELECTRONIC OPERATION

Model	Gas train	Operation	RX92R Code	RX92R Price €	RX92.1 Code	RX92.1 Price €
M-.PR.S.xx.A.1.50.EA	2"	PR	01201865A		01201925A	
M-.PR.L.xx.A.1.50.EA	2"	PR	01201875A		01201935A	
M-.PR.S.xx.A.1.65.EA	DN65	PR	01201885A		01201945A	
M-.PR.L.xx.A.1.65.EA	DN65	PR	01201895A		01201955A	
M-.PR.S.xx.A.1.80.EA	DN80	PR	01201785A		01201965A	
M-.PR.L.xx.A.1.80.EA	DN80	PR	01201905A		01201975A	
M-.PR.S.xx.A.1.100.EA	DN100	PR	01201795A		01201985A	
M-.PR.L.xx.A.1.100.EA	DN100	PR	01201915A		01201995A	
M-.MD.S.xx.A.1.50.EA	2"	MD(*)	01201865E		01201925E	
M-.MD.L.xx.A.1.50.EA	2"	MD(*)	01201875E		01201935E	
M-.MD.S.xx.A.1.65.EA	DN65	MD(*)	01201885E		01201945E	
M-.MD.L.xx.A.1.65.EA	DN65	MD(*)	01201895E		01201955E	
M-.MD.S.xx.A.1.80.EA	DN80	MD(*)	01201785E		01201965E	
M-.MD.L.xx.A.1.80.EA	DN80	MD(*)	01201905E		01201975E	
M-.MD.S.xx.A.1.100.EA	DN100	MD(*)	01201795E		01201985E	
M-.MD.L.xx.A.1.100.EA	DN100	MD(*)	01201915E		01201995E	
M-.MD.S.xx.A.1.50.ES	2"	MD(*)	01201865S		01201925S	
M-.MD.L.xx.A.1.50.ES	2"	MD(*)	01201875S		01201935S	
M-.MD.S.xx.A.1.65.ES	DN65	MD(*)	01201885S		01201945S	
M-.MD.L.xx.A.1.65.ES	DN65	MD(*)	01201895S		01201955S	
M-.MD.S.xx.A.1.80.ES	DN80	MD(*)	01201785S		01201965S	
M-.MD.L.xx.A.1.80.ES	DN80	MD(*)	01201905S		01201975S	
M-.MD.S.xx.A.1.100.ES	DN100	MD(*)	01201795S		01201985S	
M-.MD.L.xx.A.1.100.ES	DN100	MD(*)	01201915S		01201995S	

(*) In order for the supply to be completed, the burner must be equipped with the respective modulating probe (see accessory table, page 290).
In compliance with GAR DIRECTIVE 2016/426/EU.

RX92R RX92.1 novanta SERIES

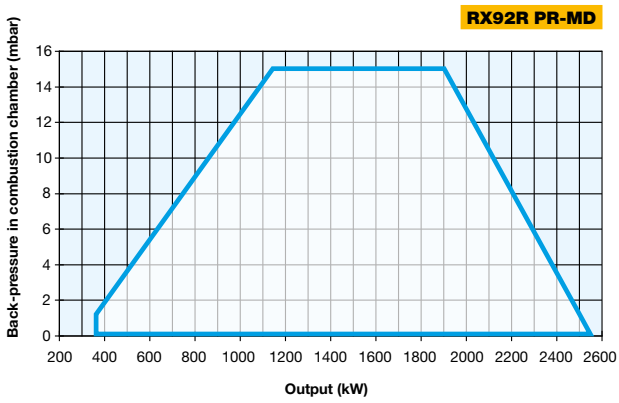

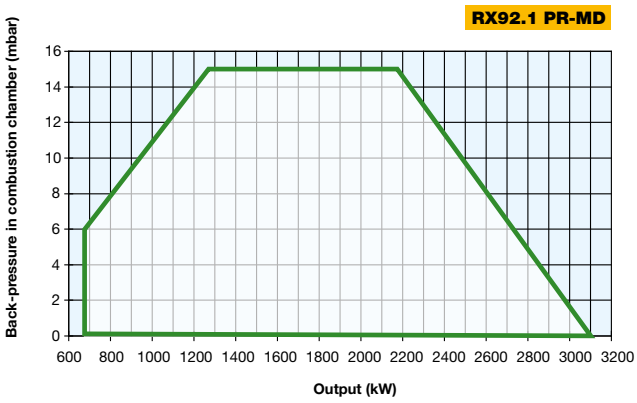

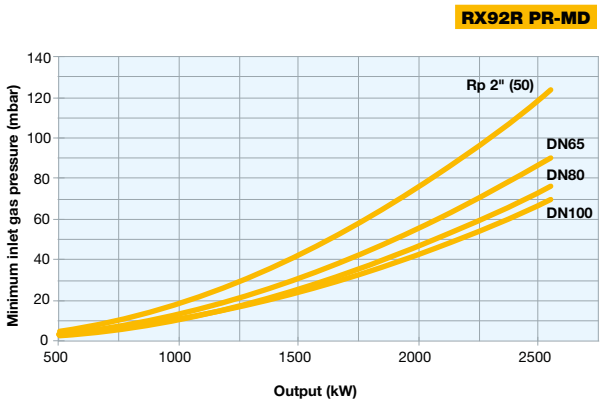

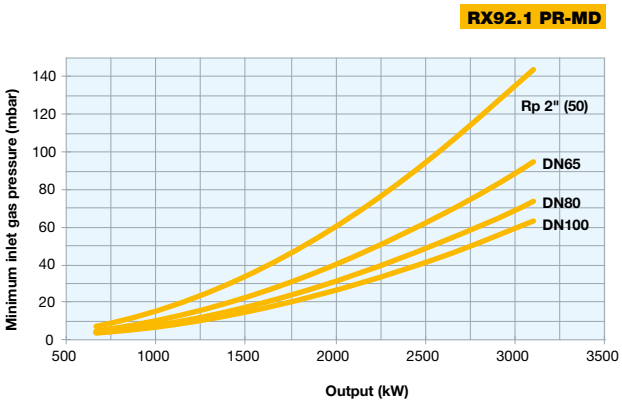

Attention: the graph shows the value of the gas output (kW) against the corresponding pressure without the combustion chamber back pressure. To know the minimum gas pressure at gas train, in order to get the gas output, it is necessary to add the boiler back pressure to the value read on the curve.

novanta SERIES G215X G250X G300X...xR

NEW

GAS

The new G type NOVANTA series **Low NO_x burners Class 3 (< 80 mg/kWh)** made in aluminum housing with a backward curved centrifugal impeller have been developed to meet the current and future requests regarding the low emissions of NO_x.
The innovation of the combustion head allows to achieve substantial improvements in terms of emissions reduction, flame stability and reliability.
The perfect mix of air/gas within the combustion head of these burners, guarantees a very uniform flame in all working conditions.

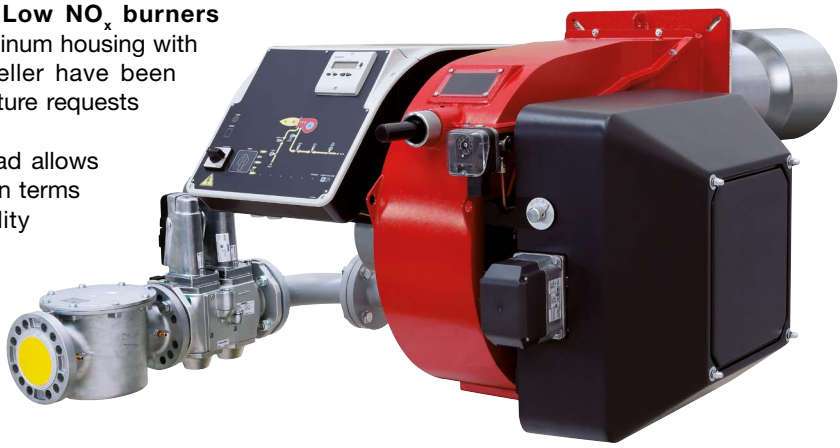

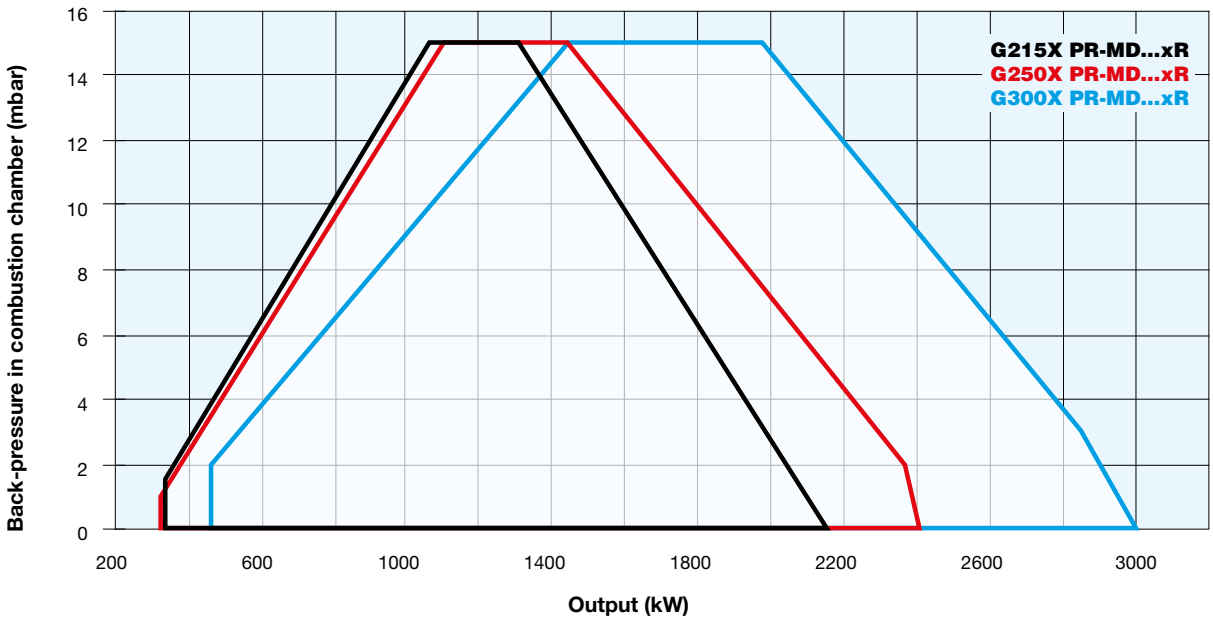

G215X G250X G300X...xR novanta SERIES

TECHNICAL DETAILS

Type	Model	Power kW		Auxiliary electrical power supply	Motor electrical power supply	Fan motor	Gas connections	Noise level
		min.	max.			kW	Rp	dBA
G215X	M-.xx.xR.xx.A.1.xxx	350	2.150	230 V 1N AC 50 Hz	400 V 3 AC 50 Hz	3	2" - DN65 - DN80 - DN100	< 85
G250X	M-.xx.xR.xx.A.1.xxx	360	2.500	230 V 1N AC 50 Hz	400 V 3 AC 50 Hz	3	2" - DN65 - DN80 - DN100	< 85
G300X	M-.xx.xR.xx.A.1.xxx	460	3.000	230 V 1N AC 50 Hz	400 V 3 AC 50 Hz	4	2" - DN65 - DN80 - DN100	< 85

For the configuration of the gas train, see pages 116-117.

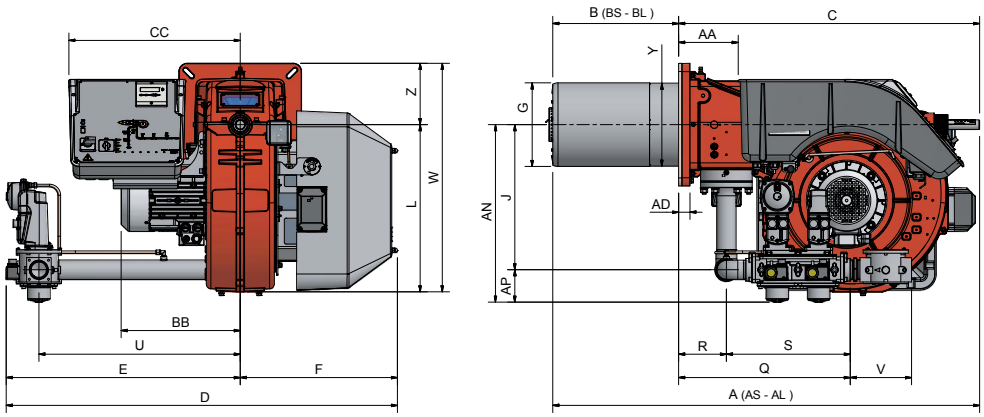

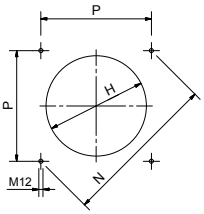

Suggested boiler drilling

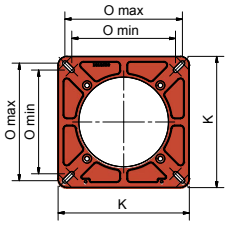

Burner flange

Type	Packaging dimensions (mm)			
	l	p	h	kg
G215X	1680	1260	1020	275
G250X	1680	1260	1020	275
G300X	1680	1260	1020	280

Approximate values (regarding model with gas train DN 80)

Type	Model	Overall dimensions (mm)																														
		AS	AL	AA	AD	AN	AP	BS	BL	BB	C	CC	D	E	F	G	H	J	K	L	M	N	O min.	O max.	P	Q	R	S	U	V	W	Y	Z
G215X	M-.xx.SR.xx.A,1.50	1323	1423	184	35	550	100	390	490	391	933	531	1212	725	487	259	289	450	380	518	M12	453	300	340	320	533	149	384	624	190	708	257	190
G215X	M-.xx.SR.xx.A.1.65	1323	1423	184	35	567	117	390	490	391	933	531	1456	969	487	259	289	450	380	518	M12	453	300	340	320	636	149	487	845	292	708	257	190
G215X	M-.xx.SR.xx.A.1.80	1323	1423	184	35	582	132	390	490	391	933	531	1489	1002	487	259	289	450	380	518	M12	453	300	340	320	687	149	538	875	310	708	257	190
G215X	M-.xx.SR.xx.A.1.100	1323	1423	184	35	595	145	390	490	391	933	531	1569	1082	487	259	289	450	380	518	M12	453	300	340	320	791	149	642	942	353	708	257	190
G250X	M-.xx.SR.xx.A.1.50	1363	1463	184	35	550	100	430	530	391	933	531	1212	725	487	284	314	450	380	518	M12	453	300	340	320	533	149	384	624	190	708	257	190
G250X	M-.xx.SR.xx.A.1.65	1363	1463	184	35	567	117	430	530	391	933	531	1456	969	487	284	314	450	380	518	M12	453	300	340	320	636	149	487	845	292	708	257	190
G250X	M-.xx.SR.xx.A.1.80	1363	1463	184	35	582	132	430	530	391	933	531	1489	1002	487	284	314	450	380	518	M12	453	300	340	320	687	149	538	875	310	708	257	190
G250X	M-.xx.SR.xx.A.1.100	1363	1463	184	35	595	145	430	530	391	933	531	1569	1082	487	284	314	450	380	518	M12	453	300	340	320	791	149	642	942	353	708	257	190
G300X	M-.xx.SR.xx.A.1.50	1363	1463	184	35	550	100	430	530	391	933	531	1212	725	487	309	349	450	380	518	M12	453	300	340	320	533	149	384	624	190	708	257	190
G300X	M-.xx.SR.xx.A.1.65	1363	1463	184	35	567	117	430	530	391	933	531	1456	969	487	309	349	450	380	518	M12	453	300	340	320	636	149	487	845	292	708	257	190
G300X	M-.xx.SR.xx.A.1.80	1363	1463	184	35	582	132	430	530	391	933	531	1489	1002	487	309	349	450	380	518	M12	453	300	340	320	687	149	538	875	310	708	257	190
G300X	M-.xx.SR.xx.A.1.100	1363	1463	184	35	595	145	430	530	391	933	531	1569	1082	487	309	349	450	380	518	M12	453	300	340	320	791	149	642	942	353	708	257	190

Approximate values

ELECTRONIC OPERATION

Model	Gas train	Operation	G215X...xR Code	G215X...xR Price €	G250X...xR Code	G250X...xR Price €
M-.PR.SR.xx.A.1.50.EA	2"	PR	03601095A		03601175A	
M-.PR.LR.xx.A.1.50.EA	2"	PR	03601105A		03601185A	
M-.PR.SR.xx.A.1.65.EA	DN65	PR	03601115A		03601195A	
M-.PR.LR.xx.A.1.65.EA	DN65	PR	03601125A		03601205A	
M-.PR.SR.xx.A.1.80.EA	DN80	PR	03601135A		03601215A	
M-.PR.LR.xx.A.1.80.EA	DN80	PR	03601145A		03601225A	
M-.PR.SR.xx.A.1.100.EA	DN100	PR	03601155A		03601235A	
M-.PR.LR.xx.A.1.100.EA	DN100	PR	03601165A		03601245A	
M-.MD.SR.xx.A.1.50.EA	2"	MD(*)	03601095E		03601175E	
M-.MD.LR.xx.A.1.50.EA	2"	MD(*)	03601105E		03601185E	
M-.MD.SR.xx.A.1.65.EA	DN65	MD(*)	03601115E		03601195E	
M-.MD.LR.xx.A.1.65.EA	DN65	MD(*)	03601125E		03601205E	
M-.MD.SR.xx.A.1.80.EA	DN80	MD(*)	03601135E		03601215E	
M-.MD.LR.xx.A.1.80.EA	DN80	MD(*)	03601145E		03601225E	
M-.MD.SR.xx.A.1.100.EA	DN100	MD(*)	03601155E		03601235E	
M-.MD.LR.xx.A.1.100.EA	DN100	MD(*)	03601165E		03601245E	
M-.MD.SR.xx.A.1.50.ES	2"	MD(*)	03601095S		03601175S	
M-.MD.LR.xx.A.1.50.ES	2"	MD(*)	03601105S		03601185S	
M-.MD.SR.xx.A.1.65.ES	DN65	MD(*)	03601115S		03601195S	
M-.MD.LR.xx.A.1.65.ES	DN65	MD(*)	03601125S		03601205S	
M-.MD.SR.xx.A.1.80.ES	DN80	MD(*)	03601135S		03601215S	
M-.MD.LR.xx.A.1.80.ES	DN80	MD(*)	03601145S		03601225S	
M-.MD.SR.xx.A.1.100.ES	DN100	MD(*)	03601155S		03601235S	
M-.MD.LR.xx.A.1.100.ES	DN100	MD(*)	03601165S		03601245S	

(*) In order for the supply to be completed, the burner must be equipped with the respective modulating probe (see accessory table, page 290).
In compliance with GAR DIRECTIVE 2016/426/EU.

ELECTRONIC OPERATION

Model	Gas train	Operation	G300X...xR Code	Price €
M-.PR.SR.xx.A.1.50.EA	2"	PR	03601255A	
M-.PR.LR.xx.A.1.50.EA	2"	PR	03601265A	
M-.PR.SR.xx.A.1.65.EA	DN65	PR	03601275A	
M-.PR.LR.xx.A.1.65.EA	DN65	PR	03601285A	
M-.PR.SR.xx.A.1.80.EA	DN80	PR	03601295A	
M-.PR.LR.xx.A.1.80.EA	DN80	PR	03601305A	
M-.PR.SR.xx.A.1.100.EA	DN100	PR	03601315A	
M-.PR.LR.xx.A.1.100.EA	DN100	PR	03601325A	
M-.MD.SR.xx.A.1.50.EA	2"	MD(*)	03601255E	
M-.MD.LR.xx.A.1.50.EA	2"	MD(*)	03601265E	
M-.MD.SR.xx.A.1.65.EA	DN65	MD(*)	03601275E	
M-.MD.LR.xx.A.1.65.EA	DN65	MD(*)	03601285E	
M-.MD.SR.xx.A.1.80.EA	DN80	MD(*)	03601295E	
M-.MD.LR.xx.A.1.80.EA	DN80	MD(*)	03601305E	
M-.MD.SR.xx.A.1.100.EA	DN100	MD(*)	03601315E	
M-.MD.LR.xx.A.1.100.EA	DN100	MD(*)	03601325E	
M-.MD.SR.xx.A.1.50.ES	2"	MD(*)	03601255S	
M-.MD.LR.xx.A.1.50.ES	2"	MD(*)	03601265S	
M-.MD.SR.xx.A.1.65.ES	DN65	MD(*)	03601275S	
M-.MD.LR.xx.A.1.65.ES	DN65	MD(*)	03601285S	
M-.MD.SR.xx.A.1.80.ES	DN80	MD(*)	03601295S	
M-.MD.LR.xx.A.1.80.ES	DN80	MD(*)	03601305S	
M-.MD.SR.xx.A.1.100.ES	DN100	MD(*)	03601315S	
M-.MD.LR.xx.A.1.100.ES	DN100	MD(*)	03601325S	

(*) In order for the supply to be completed, the burner must be equipped with the respective modulating probe (see accessory table, page 290).
In compliance with GAR DIRECTIVE 2016/426/EU.

G215X G250X G300X...xR

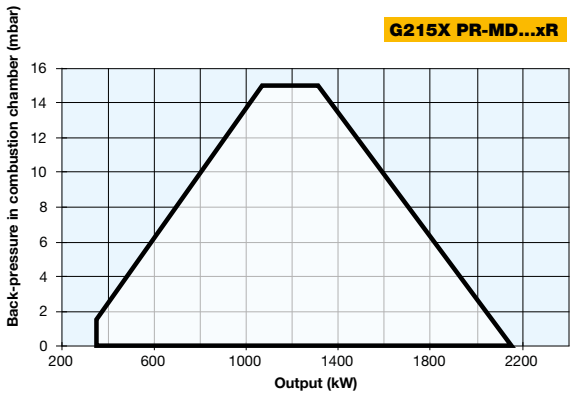

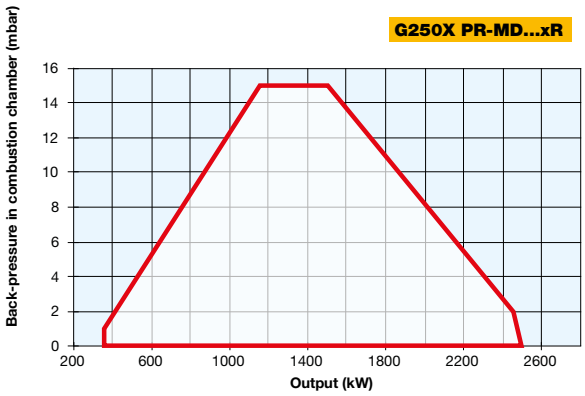

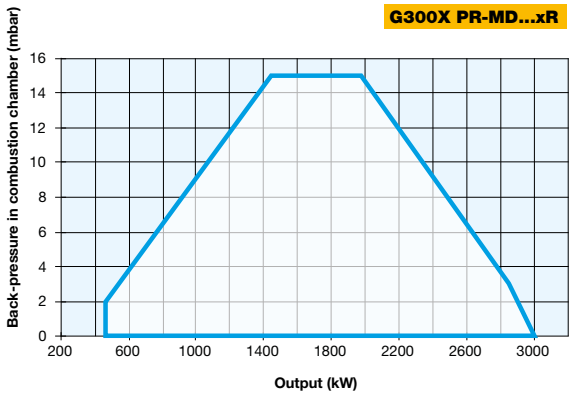

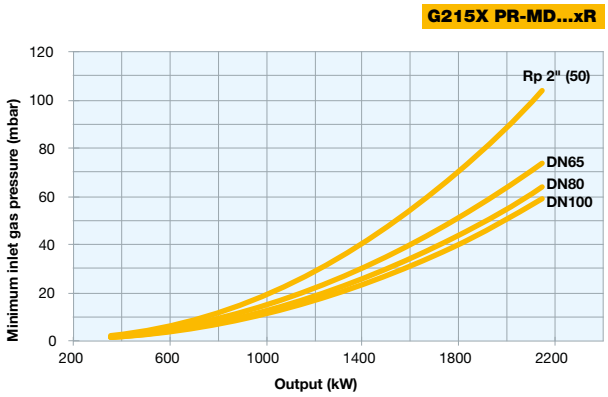

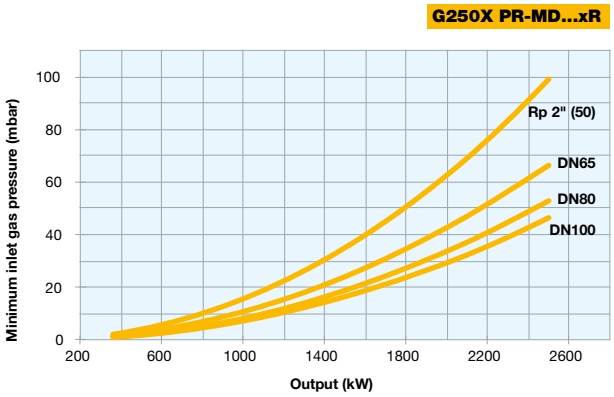

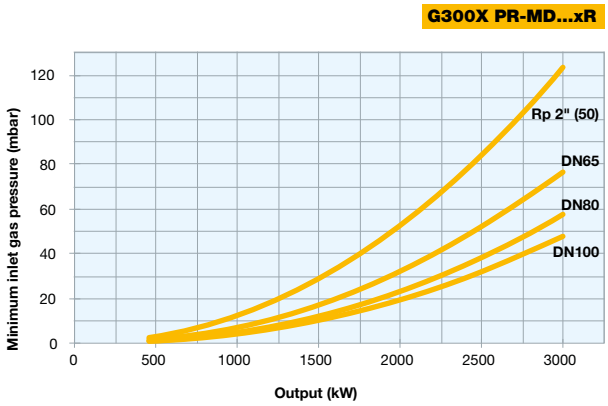

Attention: the graph shows the value of the gas output (kW) against the corresponding pressure without the combustion chamber back pressure. To know the minimum gas pressure at gas train, in order to get the gas output, it is necessary to add the boiler back pressure to the value read on the curve.

NEW

GAS

CIB UNIGAS < 80 mg/kWh CLASS 3 Low NOx

H365X H440X H500X...xR cinquecento SERIES

The new H type CINQUECENTO series **Low NO_x burners Class 3 (< 80 mg/kWh)** made in aluminum housing with a backward curved centrifugal impeller have been developed to meet the current and future requests regarding the low emissions of N_x.
The innovation of the combustion head allows to achieve substantial improvements in terms of emissions reduction, flame stability and reliability.
The perfect mix of air/gas within the combustion head of these burners, guarantees a very uniform flame in all working conditions.

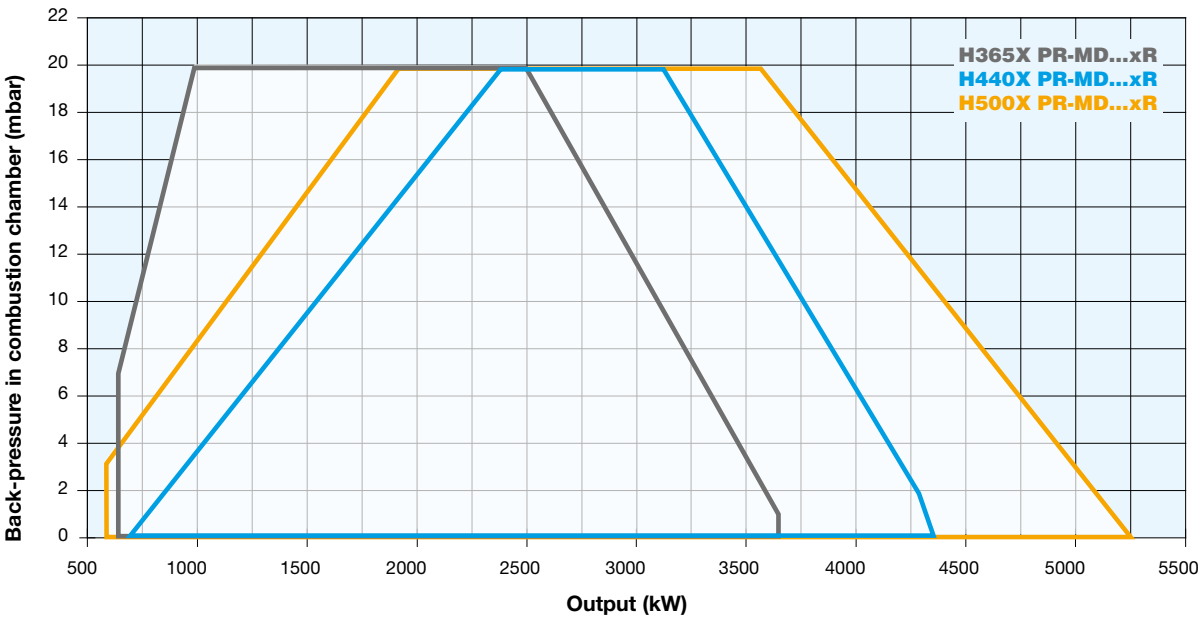

H365X H440X H500X...xR

GAS

TECHNICAL DETAILS

Type	Model	Power kW		Auxiliary electrical power supply	Motor electrical power supply	Fan motor	Gas connections	Noise level
		min.	max.			kW	Rp	dBA
H365X	M-.xx.xR.xx.A.1.xxx	650	3.650	230 V 1N AC 50 Hz	400 V 3 AC 50 Hz	7,5	2" - DN65 - DN80 - DN100	< 85
H440X	M-.xx.xR.xx.A.1.xxx	700	4.400	230 V 1N AC 50 Hz	400 V 3 AC 50 Hz	9,2	2" - DN65 - DN80 - DN100	< 85
H500X	M-.xx.xR.xx.A.1.xxx	580	5.250	230 V 1N AC 50 Hz	400 V 3 AC 50 Hz	9,2	2" - DN65 - DN80 - DN100	< 85

For the configuration of the gas train, see pages 116-117.

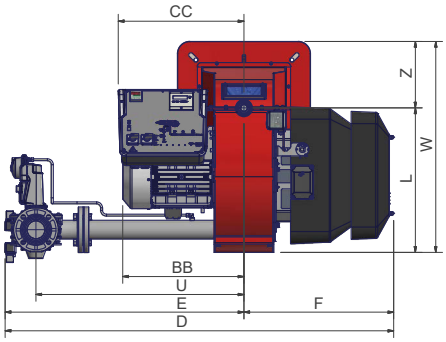

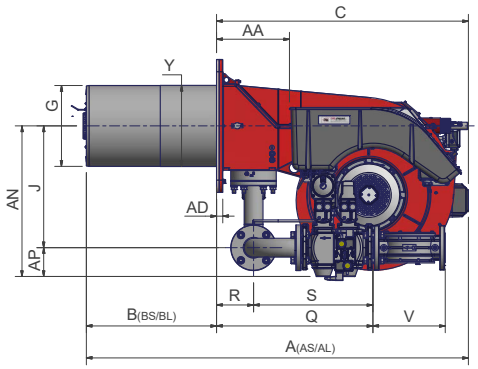

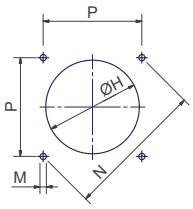

Suggested boiler drilling

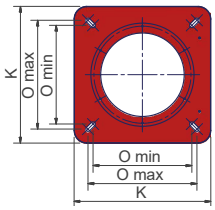

Burner flange

Type	Packaging dimensions (mm)			
	l	p	h	kg
H365X	1890	1290	1220	315
H440X	1890	1290	1220	335
H440X	1890	1290	1220	350

Approximate values (regarding model with gas train DN 80

Type	Model	Overall dimensions (mm)																															
		AS	AL	AA	AD	AN	AP	BS	BL	BB	C	CC	D	E	F	G	H	J	K	L	M	N	O min.	O max.	P	Q	R	S	U	V	W	Y	Z
H365X	M-.xx.xR.xx.A.1.50	1647	1747	295	25	595	100	430	530	471	1217	511	1554	946	608	284	316	494	540	586	M14	552	390	430	390	764	150	613	845	190	856	284	270
H365X	M-.xx.xR.xx.A.1.65	1647	1747	295	25	611	117	430	530	471	1217	511	1577	969	608	284	316	494	540	586	M14	552	390	430	390	634	150	484	845	294	856	284	270
H365X	M-.xx.xR.xx.A.1.80	1647	1747	295	25	626	132	430	530	471	1217	511	1610	1002	608	284	316	494	540	586	M14	552	390	430	390	686	150	535	875	313	856	284	270
H365X	M-.xx.xR.xx.A.1.100	1647	1747	295	25	639	145	430	530	471	1217	511	1690	1082	608	284	316	494	540	586	M14	552	390	430	390	791	150	642	942	353	856	284	270
H440X	M-.xx.xR.xx.A.1.50	1647	1747	295	25	595	100	430	530	488	1217	511	1554	946	608	328	370	494	540	586	M14	552	390	430	390	764	150	613	845	190	856	328	270
H440X	M-.xx.xR.xx.A.1.65	1647	1747	295	25	611	117	430	530	488	1217	511	1577	969	608	328	370	494	540	586	M14	552	390	430	390	634	150	484	845	294	856	328	270
H440X	M-.xx.xR.xx.A.1.80	1647	1747	295	25	626	132	430	530	488	1217	511	1610	1002	608	328	370	494	540	586	M14	552	390	430	390	686	150	535	875	313	856	328	270
H440X	M-.xx.xR.xx.A.1.100	1647	1747	295	25	639	145	430	530	488	1217	511	1690	1082	608	328	370	494	540	586	M14	552	390	430	390	791	150	642	942	353	856	328	270
H500X	M-.xx.xR.xx.A.1.50	1647	1747	295	25	595	100	430	530	488	1217	511	1554	946	608	360	410	494	540	586	M14	552	390	430	390	764	150	613	845	190	856	356	270
H500X	M-.xx.xR.xx.A.1.65	1647	1747	295	25	611	117	430	530	488	1217	511	1577	969	608	360	410	494	540	586	M14	552	390	430	390	634	150	484	845	294	856	356	270
H500X	M-.xx.xR.xx.A.1.80	1647	1747	295	25	626	132	430	530	488	1217	511	1610	1002	608	360	410	494	540	586	M14	552	390	430	390	686	150	535	875	313	856	356	270
H500X	M-.xx.xR.xx.A.1.100	1647	1747	295	25	639	145	430	530	488	1217	511	1690	1082	608	360	410	494	540	586	M14	552	390	430	390	791	150	642	942	353	856	356	270

Approximate values

ELECTRONIC OPERATION

Model	Gas train	Operation	H365X...xR Code	H365X...xR Price €	H440X...xR Code	H440X...xR Price €
M-.PR.SR.xx.A.1.50.EA	2"	PR	03501135A		03501215A	
M-.PR.LR.xx.A.1.50.EA	2"	PR	03501145A		03501225A	
M-.PR.SR.xx.A.1.65.EA	DN65	PR	03501155A		03501235A	
M-.PR.LR.xx.A.1.65.EA	DN65	PR	03501165A		03501245A	
M-.PR.SR.xx.A.1.80.EA	DN80	PR	03501175A		03501255A	
M-.PR.LR.xx.A.1.80.EA	DN80	PR	03501185A		03501265A	
M-.PR.SR.xx.A.1.100.EA	DN100	PR	03501195A		03501275A	
M-.PR.LR.xx.A.1.100.EA	DN100	PR	03501205A		03501285A	
M-.MD.SR.xx.A.1.50.EA	2"	MD(*)	03501135E		03501215E	
M-.MD.LR.xx.A.1.50.EA	2"	MD(*)	03501145E		03501225E	
M-.MD.SR.xx.A.1.65.EA	DN65	MD(*)	03501155E		03501235E	
M-.MD.LR.xx.A.1.65.EA	DN65	MD(*)	03501165E		03501245E	
M-.MD.SR.xx.A.1.80.EA	DN80	MD(*)	03501175E		03501255E	
M-.MD.LR.xx.A.1.80.EA	DN80	MD(*)	03501185E		03501265E	
M-.MD.SR.xx.A.1.100.EA	DN100	MD(*)	03501195E		03501275E	
M-.MD.LR.xx.A.1.100.EA	DN100	MD(*)	03501205E		03501285E	
M-.MD.SR.xx.A.1.50.ES	2"	MD(*)	03501135S		03501215S	
M-.MD.LR.xx.A.1.50.ES	2"	MD(*)	03501145S		03501225S	
M-.MD.SR.xx.A.1.65.ES	DN65	MD(*)	03501155S		03501235S	
M-.MD.LR.xx.A.1.65.ES	DN65	MD(*)	03501165S		03501245S	
M-.MD.SR.xx.A.1.80.ES	DN80	MD(*)	03501175S		03501255S	
M-.MD.LR.xx.A.1.80.ES	DN80	MD(*)	03501185S		03501265S	
M-.MD.SR.xx.A.1.100.ES	DN100	MD(*)	03501195S		03501275S	
M-.MD.LR.xx.A.1.100.ES	DN100	MD(*)	03501205S		03501285S	

(*) In order for the supply to be completed, the burner must be equipped with the respective modulating probe (see accessory table, page 290).
In compliance with GAR DIRECTIVE 2016/426/EU.

ELECTRONIC OPERATION

Model	Gas train	Operation	H500X...xR Code	Price €
M-.PR.SR.xx.A.1.50.EA	2"	PR	03501295A	
M-.PR.LR.xx.A.1.50.EA	2"	PR	03501305A	
M-.PR.SR.xx.A.1.65.EA	DN65	PR	03501315A	
M-.PR.LR.xx.A.1.65.EA	DN65	PR	03501325A	
M-.PR.SR.xx.A.1.80.EA	DN80	PR	03501335A	
M-.PR.LR.xx.A.1.80.EA	DN80	PR	03501345A	
M-.PR.SR.xx.A.1.100.EA	DN100	PR	03501355A	
M-.PR.LR.xx.A.1.100.EA	DN100	PR	03501365A	
M-.MD.SR.xx.A.1.50.EA	2"	MD(*)	03501295E	
M-.MD.LR.xx.A.1.50.EA	2"	MD(*)	03501305E	
M-.MD.SR.xx.A.1.65.EA	DN65	MD(*)	03501315E	
M-.MD.LR.xx.A.1.65.EA	DN65	MD(*)	03501325E	
M-.MD.SR.xx.A.1.80.EA	DN80	MD(*)	03501335E	
M-.MD.LR.xx.A.1.80.EA	DN80	MD(*)	03501345E	
M-.MD.SR.xx.A.1.100.EA	DN100	MD(*)	03501355E	
M-.MD.LR.xx.A.1.100.EA	DN100	MD(*)	03501365E	
M-.MD.SR.xx.A.1.50.ES	2"	MD(*)	03501295S	
M-.MD.LR.xx.A.1.50.ES	2"	MD(*)	03501305S	
M-.MD.SR.xx.A.1.65.ES	DN65	MD(*)	03501315S	
M-.MD.LR.xx.A.1.65.ES	DN65	MD(*)	03501325S	
M-.MD.SR.xx.A.1.80.ES	DN80	MD(*)	03501335S	
M-.MD.LR.xx.A.1.80.ES	DN80	MD(*)	03501345S	
M-.MD.SR.xx.A.1.100.ES	DN100	MD(*)	03501355S	
M-.MD.LR.xx.A.1.100.ES	DN100	MD(*)	03501365S	

(*) In order for the supply to be completed, the burner must be equipped with the respective modulating probe (see accessory table, page 290).
In compliance with GAR DIRECTIVE 2016/426/EU.

H365X H440X H500X...xR cinquecento SERIES

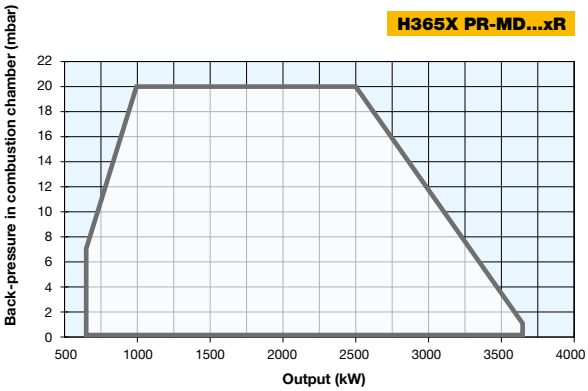

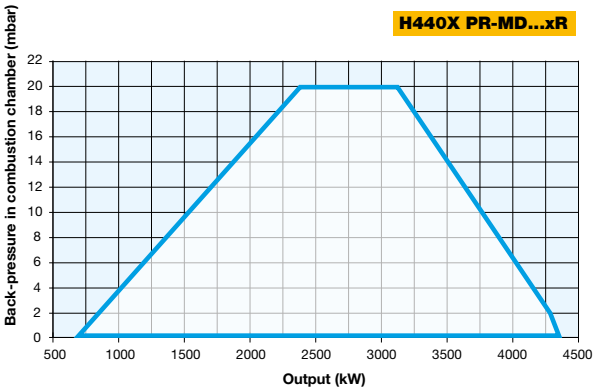

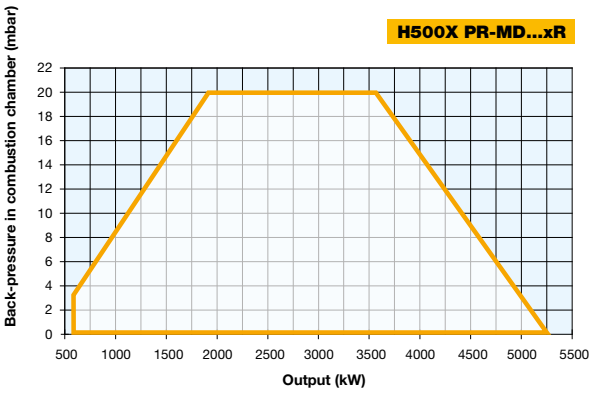

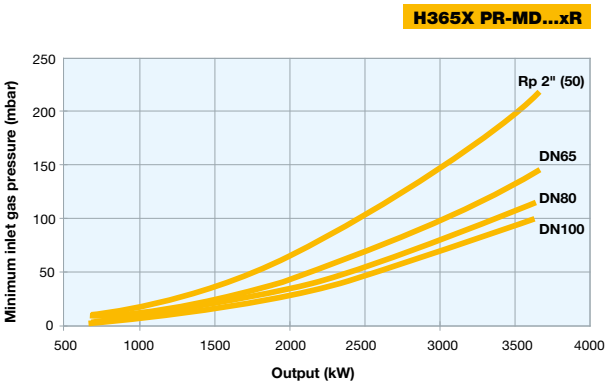

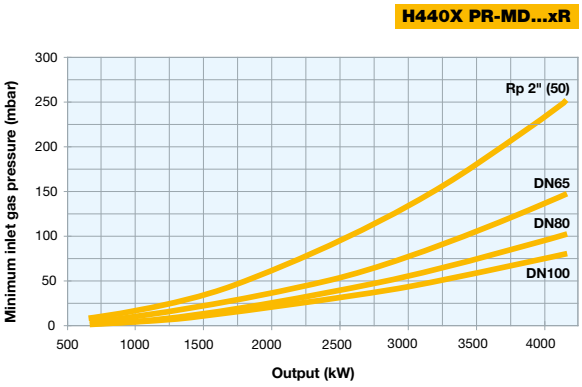

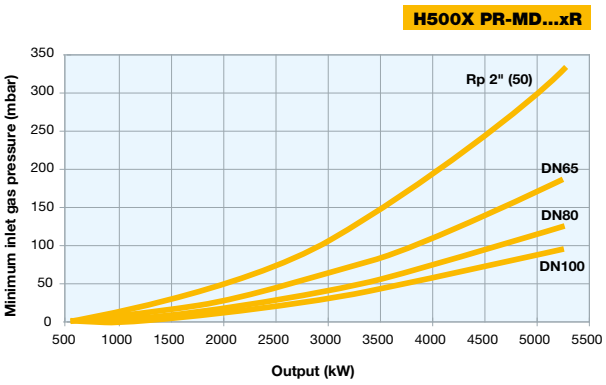

Attention: the graph shows the value of the gas output (kW) against the corresponding pressure without the combustion chamber back pressure. To know the minimum gas pressure at gas train, in order to get the gas output, it is necessary to add the boiler back pressure to the value read on the curve.

cinquecento SERIES K590X K750X...xR

NEW

GAS

The new K type CINQUECENTO series **Low NO_x burners Class 3 (< 80 mg/kWh**) made in aluminum housing with a backward curved centrifugal impeller have been developed to meet the current and future requests regarding the low emissions of NO_x.
The innovation of the combustion head allows to achieve substantial improvements in terms of emissions reduction, flame stability and reliability.
The perfect mix of air/gas within the combustion head of these burners, guarantees a very uniform flame in all working conditions.

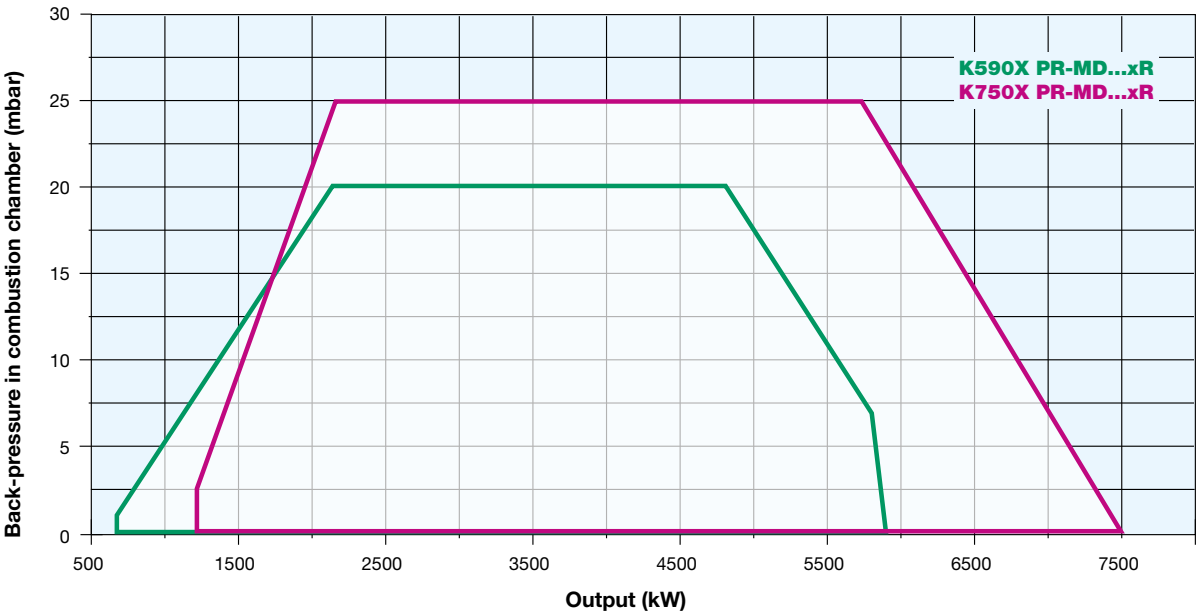

K590X K750X...xR cinquecento SERIES

TECHNICAL DETAILS

Type	Model	Power kW min.	Power kW max.	Auxiliary electrical power supply	Motor electrical power supply	Fan motor kW	Gas connections	Noise level dBA
K590X	M-.xx.xR.xx.A.1.xxx	670	5.900	230 V 1N AC 50 Hz	400 V 3 AC 50 Hz	15,0	DN65 - DN80 - DN100 - DN125	< 85
K750X	M-.xx.xR.xx.A.1.xxx	860	7.500	230 V 1N AC 50 Hz	400 V 3 AC 50 Hz	15,0	DN65 - DN80 - DN100 - DN125	< 85

For the configuration of the gas train, see pages 116-117.

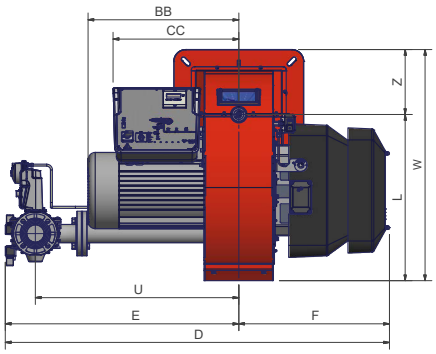

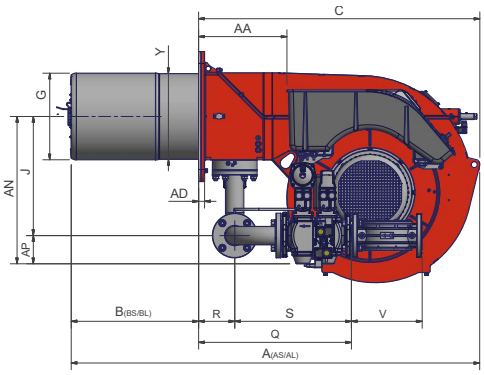

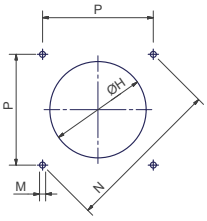

Suggested boiler drilling

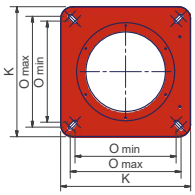

Burner flange

Type	Packaging dimensions (mm) l	p	h	kg
K590X	2040	1450	1220	430
K750X	2040	1450	1220	455

Approximate values (regarding model with gas train DN 80

Type	Model	Overall dimensions (mm) AS	AL	AA	AD	AN	AP	BS	BL	BB	C	CC	D	E	F	G	H	J	K	L	M	N	O min.	O max.	P	Q	R	S	U	V	W	Y	Z
K590X	M-.xx.xR.xx.A.1.65	1741	1841	366	25	611	117	430	530	626	1311	524	1595	969	626	360	400	494	540	690	M16	651	420	460	460	636	150	487	845	292	960	356	270
K590X	M-.xx.xR.xx.A.1.80	1741	1841	366	25	626	132	430	530	626	1311	524	1628	1002	626	360	400	494	540	690	M16	651	420	460	460	687	150	538	875	313	960	356	270
K590X	M-.xx.xR.xx.A.1.100	1741	1841	366	25	639	145	430	530	626	1311	524	1708	1082	626	360	400	494	540	690	M16	651	420	460	460	791	150	642	942	353	960	356	270
K590X	M-.xx.xR.xx.A.1.125	1741	1841	366	25	738	175	430	530	626	1311	524	1973	1347	626	360	400	562	540	690	M16	651	420	460	460	904	150	754	1192	479	960	356	270
K750X	M-.xx.xR.xx.A.1.65	1741	1841	366	25	611	117	430	530	626	1311	524	1595	969	626	419	470	494	540	690	M16	651	420	460	460	636	150	487	845	292	960	336	270
K750X	M-.xx.xR.xx.A.1.80	1741	1841	366	25	626	132	430	530	626	1311	524	1628	1002	626	419	470	494	540	690	M16	651	420	460	460	687	150	538	875	313	960	336	270
K750X	M-.xx.xR.xx.A.1.100	1741	1841	366	25	639	145	430	530	626	1311	524	1708	1082	626	419	470	494	540	690	M16	651	420	460	460	791	150	642	942	353	960	336	270
K750X	M-.xx.xR.xx.A.1.125	1741	1841	366	25	738	175	430	530	626	1311	524	1973	1347	626	419	470	562	540	690	M16	651	420	460	460	904	150	754	1192	479	960	336	270

Approximate values

ELECTRONIC OPERATION

Model	Gas train	Operation	K590X...xR Code	K590X...xR Price €	K750X...xR Code	K750X...xR Price €
M-.PR.SR.xx.A.1.65.EA	DN65	PR	03401125A		03401205A	
M-.PR.LR.xx.A.1.65.EA	DN65	PR	03401135A		03401215A	
M-.PR.SR.xx.A.1.80.EA	DN80	PR	03401145A		03401225A	
M-.PR.LR.xx.A.1.80.EA	DN80	PR	03401155A		03401235A	
M-.PR.SR.xx.A.1.100.EA	DN100	PR	03401165A		03401245A	
M-.PR.LR.xx.A.1.100.EA	DN100	PR	03401175A		03401255A	
M-.PR.SR.xx.A.1.125.EA	DN125	PR	03401185A		03401265A	
M-.PR.LR.xx.A.1.125.EA	DN125	PR	03401195A		03401275A	
M-.MD.SR.xx.A.1.65.EA	DN65	MD(*)	03401125E		03401205E	
M-.MD.LR.xx.A.1.65.EA	DN65	MD(*)	03401135E		03401215E	
M-.MD.SR.xx.A.1.80.EA	DN80	MD(*)	03401145E		03401225E	
M-.MD.LR.xx.A.1.80.EA	DN80	MD(*)	03401155E		03401235E	
M-.MD.SR.xx.A.1.100.EA	DN100	MD(*)	03401165E		03401245E	
M-.MD.LR.xx.A.1.100.EA	DN100	MD(*)	03401175E		03401255E	
M-.MD.SR.xx.A.1.125.EA	DN125	MD(*)	03401185E		03401265E	
M-.MD.LR.xx.A.1.125.EA	DN125	MD(*)	03401195E		03401275E	
M-.MD.SR.xx.A.1.65.ES	DN65	MD(*)	03401125S		03401205S	
M-.MD.LR.xx.A.1.65.ES	DN65	MD(*)	03401135S		03401215S	
M-.MD.SR.xx.A.1.80.ES	DN80	MD(*)	03401145S		03401225S	
M-.MD.LR.xx.A.1.80.ES	DN80	MD(*)	03401155S		03401235S	
M-.MD.SR.xx.A.1.100.ES	DN100	MD(*)	03401165S		03401245S	
M-.MD.LR.xx.A.1.100.ES	DN100	MD(*)	03401175S		03401255S	
M-.MD.SR.xx.A.1.125.ES	DN125	MD(*)	03401185S		03401265S	
M-.MD.LR.xx.A.1.125.ES	DN125	MD(*)	03401195S		03401275S	

(*) In order for the supply to be completed, the burner must be equipped with the respective modulating probe (see accessory table, page 290).
In compliance with GAR DIRECTIVE 2016/426/EU.

K590X K750X...xR cinquecento SERIES

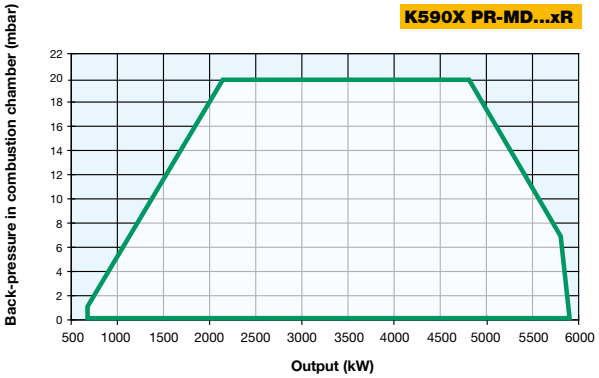

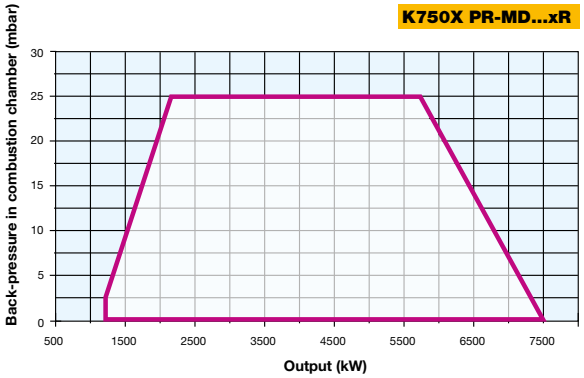

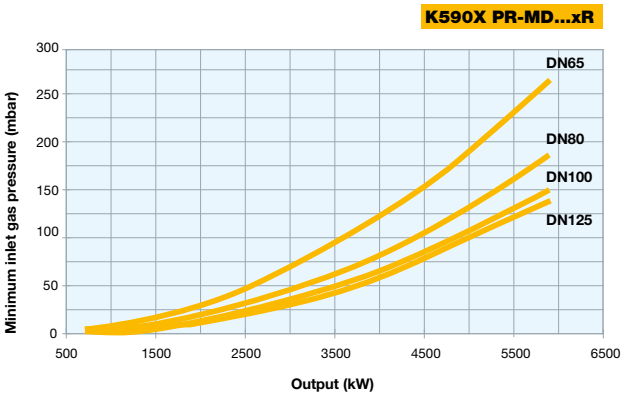

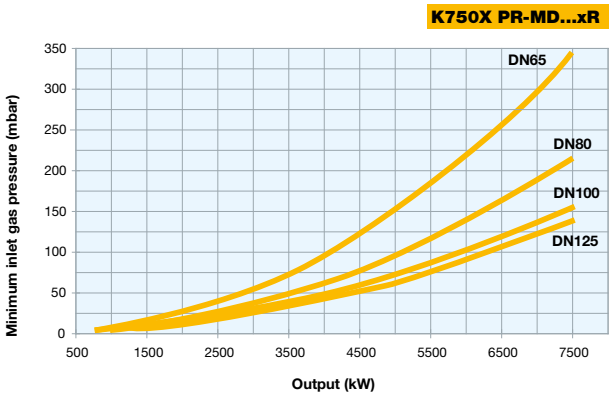

Attention: the graph shows the value of the gas output (kW) against the corresponding pressure without the combustion chamber back pressure. To know the minimum gas pressure at gas train, in order to get the gas output, it is necessary to add the boiler back pressure to the value read on the curve.

mille SERIES N880X N925X N1060X...xR

NEW

GAS

The new N type MILLE series **Low NO_x burners Class 3 (< 80 mg/kWh)** made in aluminum housing with a backward curved centrifugal impeller have been developed to meet the current and future requests regarding the low emissions of NO_x.
The innovation of the combustion head allows to achieve substantial improvements in terms of emissions reduction, flame stability and reliability.
The perfect mix of air/gas within the combustion head of these burners, guarantees a very uniform flame in all working conditions.
These burners can be equipped with electronic control box, O_2 probe and frequency inverter.

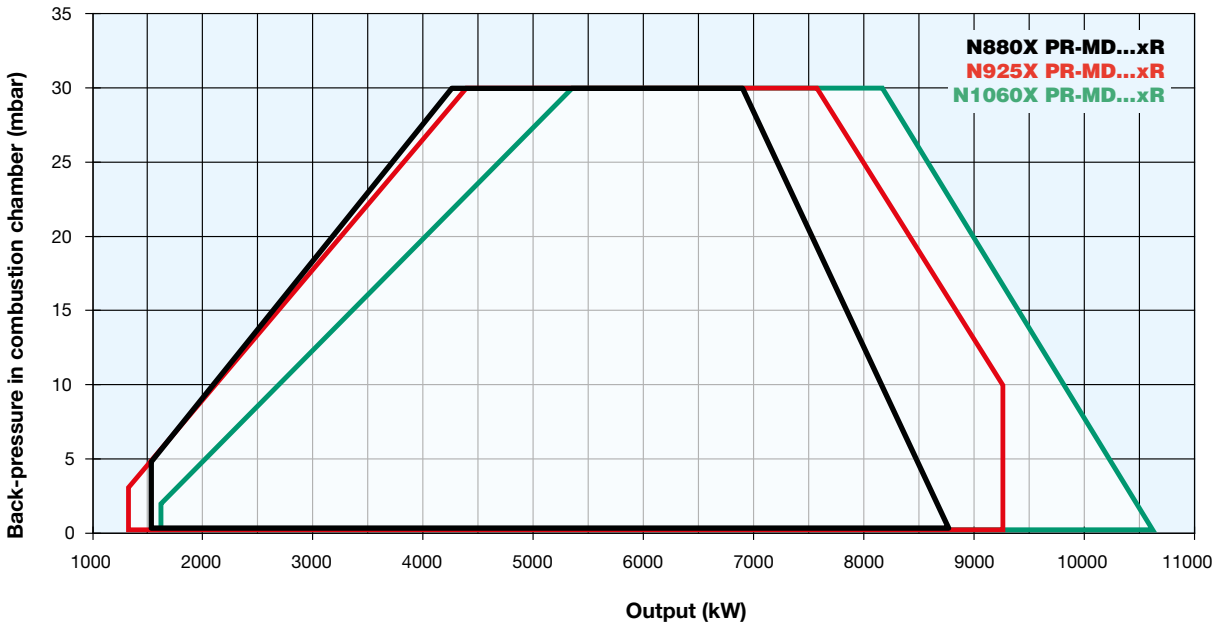

N880X N925X N1060X...xR mille SERIES

TECHNICAL DETAILS

Type	Model	Power kW min.	Power kW max.	Auxiliary electrical power supply	Motor electrical power supply	Fan motor kW	Gas connections	Noise level dBA
N880X	M-.xx.xR.xx.A.1.xxx	1.500	8.800	230 V 1N AC 50 Hz	400 V 3 AC 50 Hz	18,5	DN80 - DN100 - DN125	< 82,2
N925X	M-.xx.xR.xx.A.1.xxx	1.090	9.250	230 V 1N AC 50 Hz	400 V 3 AC 50 Hz	22,0	DN80 - DN100 - DN125	< 85,6
N1060X	M-.xx.xR.xx.A.1.xxx	1.550	10.600	230 V 1N AC 50 Hz	400 V 3 AC 50 Hz	30,0	DN80 - DN100 - DN125	< 85,6

For the configuration of the gas train, see pages 116-117.

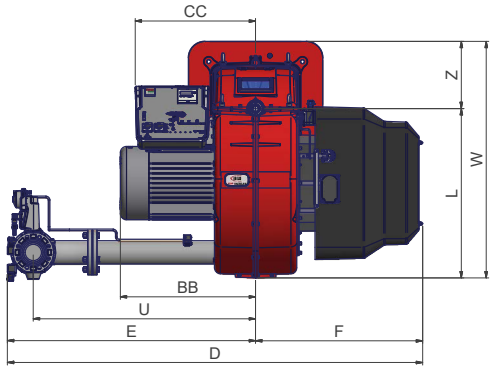

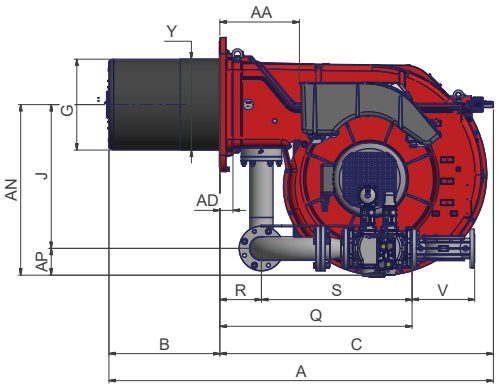

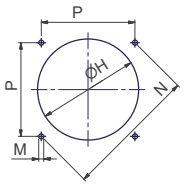

Suggested boiler drilling

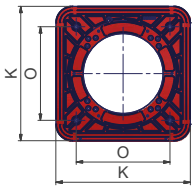

Burner flange

Type	Packaging dimensions (mm) l	p	h	kg
N880X	2300	1720	1410	630
N925X	2300	1720	1410	670
N1060X	2300	1720	1410	720

Approximate values (regarding model with gas train DN 100)

Type	Model	Overall dimensions (mm) AS	AL	AA	AD	AN	AP	BS	BL	BB	C	CC	D	E	F	G	H	J	K	L	M	N	O min.	O max.	P	Q	R	S	U	V	W	Y	Z
N880X	M-.xx.xR.xx.A.x.1.80	1850	1950	384	35	841	132	445	545	648	1345	684	1842	1219	623	446	496	709	660	831	M16	651	460	460	460	944	204	740	1092	310	1161	399	330
N880X	M-.xx.xR.xx.A.x.1.100	1850	1950	384	35	854	145	445	545	664	1345	684	1858	1235	623	446	496	709	660	831	M16	651	460	460	460	848	204	644	1092	350	1161	399	330
N880X	M-.xx.xR.xx.A.x.1.125	1850	1950	384	35	884	175	445	545	664	1345	684	1972	1349	623	446	496	709	660	831	M16	651	460	460	460	958	204	754	1192	478	1161	399	330
N925X	M-.xx.xR.xx.A.x.1.80	1850	1950	384	35	841	132	445	545	664	1345	684	1842	1219	623	446	496	709	660	831	M16	651	460	460	460	944	204	740	1092	310	1161	399	330
N925X	M-.xx.xR.xx.A.x.1.100	1850	1950	384	35	854	145	445	545	664	1345	684	1858	1235	623	446	496	709	660	831	M16	651	460	460	460	848	204	644	1092	350	1161	399	330
N925X	M-.xx.xR.xx.A.x.1.125	1850	1950	384	35	884	175	445	545	664	1345	684	1972	1349	623	446	496	709	660	831	M16	651	460	460	460	958	204	754	1192	478	1161	399	330
N1060X	M-.xx.xR.xx.A.x.1.80	1850	1950	384	35	841	132	445	545	664	1345	684	1842	1219	623	489	539	709	660	831	M16	651	460	460	460	944	204	740	1092	310	1161	399	330
N1060X	M-.xx.xR.xx.A.x.1.100	1850	1950	384	35	854	145	445	545	664	1345	684	1858	1235	623	489	539	709	660	831	M16	651	460	460	460	848	204	644	1092	350	1161	399	330
N1060X	M-.xx.xR.xx.A.x.1.125	1850	1950	384	35	884	175	445	545	664	1345	684	1972	1349	623	489	539	709	660	831	M16	651	460	460	460	958	204	754	1192	478	1161	399	330

Approximate values

ELECTRONIC OPERATION

Model	Gas train	Operation	N880X...xR Code	N880X...xR Price €	N925X...xR Code	N925X...xR Price €
M-.PR.SR.xx.A.1.80.EA	DN80	PR	02301455A		02301535A	
M-.PR.LR.xx.A.1.80.EA	DN80	PR	02301465A		02301545A	
M-.PR.SR.xx.A.1.100.EA	DN100	PR	02301475A		02301555A	
M-.PR.LR.xx.A.1.100.EA	DN100	PR	02301485A		02301565A	
M-.PR.SR.xx.A.1.125.EA	DN125	PR	02301495A		02301575A	
M-.PR.LR.xx.A.1.125.EA	DN125	PR	02301505A		02301585A	
M-.MD.SR.xx.A.1.80.EA	DN80	MD(*)	02301455E		02301535E	
M-.MD.LR.xx.A.1.80.EA	DN80	MD(*)	02301465E		02301545E	
M-.MD.SR.xx.A.1.100.EA	DN100	MD(*)	02301475E		02301555E	
M-.MD.LR.xx.A.1.100.EA	DN100	MD(*)	02301485E		02301565E	
M-.MD.SR.xx.A.1.125.EA	DN125	MD(*)	02301495E		02301575E	
M-.MD.LR.xx.A.1.125.EA	DN125	MD(*)	02301505E		02301585E	
M-.MD.SR.xx.A.1.80.ES	DN80	MD(*)	02301455S		02301535S	
M-.MD.LR.xx.A.1.80.ES	DN80	MD(*)	02301465S		02301545S	
M-.MD.SR.xx.A.1.100.ES	DN100	MD(*)	02301475S		02301555S	
M-.MD.LR.xx.A.1.100.ES	DN100	MD(*)	02301485S		02301565S	
M-.MD.SR.xx.A.1.125.ES	DN125	MD(*)	02301495S		02301575S	
M-.MD.LR.xx.A.1.125.ES	DN125	MD(*)	02301505S		02301585S	

Model	Gas train	Operation	N1060X...xR Code	N1060X...xR Price €
M-.PR.SR.xx.A.1.80.EA	DN80	PR	02301595A	
M-.PR.LR.xx.A.1.80.EA	DN80	PR	02301605A	
M-.PR.SR.xx.A.1.100.EA	DN100	PR	02301615A	
M-.PR.LR.xx.A.1.100.EA	DN100	PR	02301625A	
M-.PR.SR.xx.A.1.125.EA	DN125	PR	02301635A	
M-.PR.LR.xx.A.1.125.EA	DN125	PR	02301645A	
M-.MD.SR.xx.A.1.80.EA	DN80	MD(*)	02301595E	
M-.MD.LR.xx.A.1.80.EA	DN80	MD(*)	02301605E	
M-.MD.SR.xx.A.1.100.EA	DN100	MD(*)	02301615E	
M-.MD.LR.xx.A.1.100.EA	DN100	MD(*)	02301625E	
M-.MD.SR.xx.A.1.125.EA	DN125	MD(*)	02301635E	
M-.MD.LR.xx.A.1.125.EA	DN125	MD(*)	02301645E	
M-.MD.SR.xx.A.1.80.ES	DN80	MD(*)	02301595S	
M-.MD.LR.xx.A.1.80.ES	DN80	MD(*)	02301605S	
M-.MD.SR.xx.A.1.100.ES	DN100	MD(*)	02301615S	
M-.MD.LR.xx.A.1.100.ES	DN100	MD(*)	02301625S	
M-.MD.SR.xx.A.1.125.ES	DN125	MD(*)	02301635S	
M-.MD.LR.xx.A.1.125.ES	DN125	MD(*)	02301645S	

(*) In order for the supply to be completed, the burner must be equipped with the respective modulating probe (see accessory table, page 290).
In compliance with GAR DIRECTIVE 2016/426/EU.

N880X N925X N1060X...xR mille SERIES

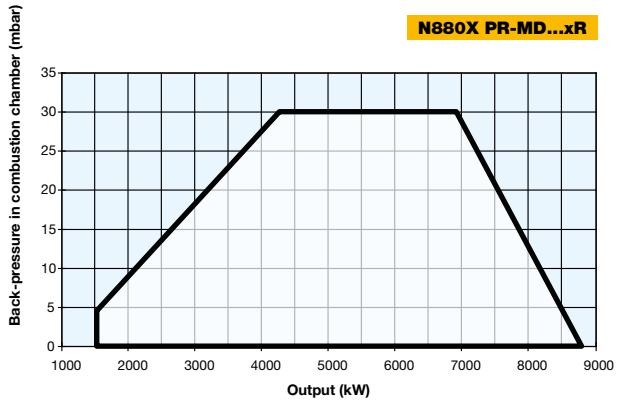

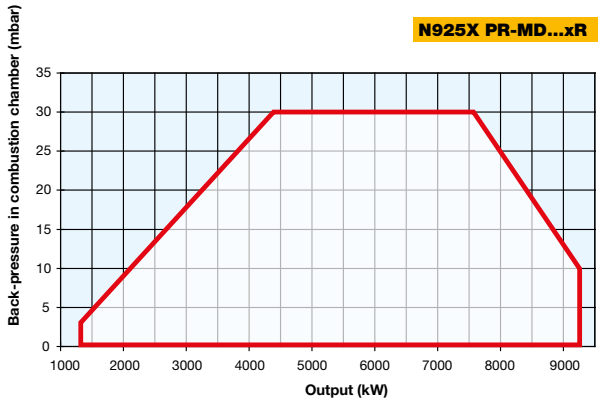

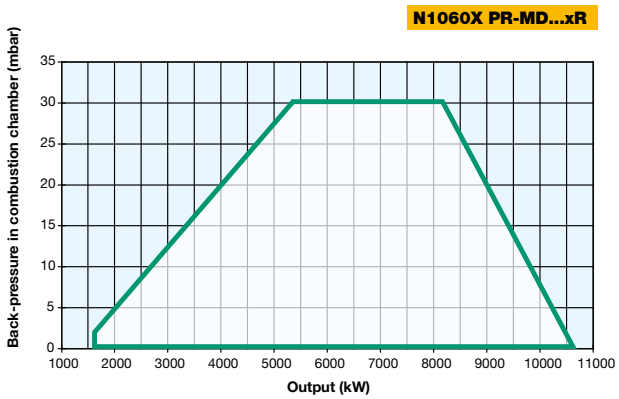

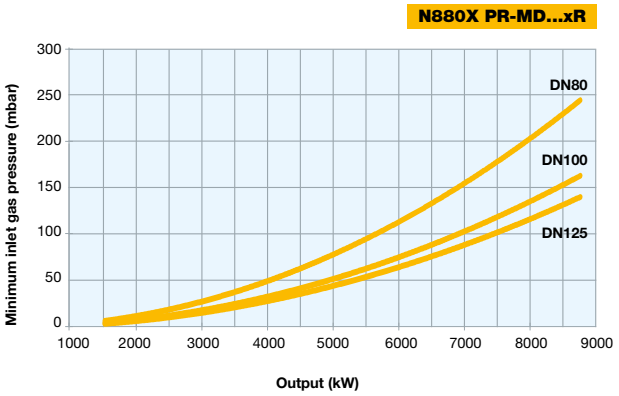

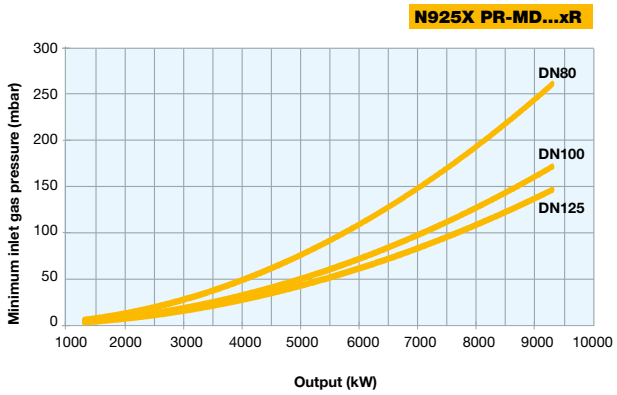

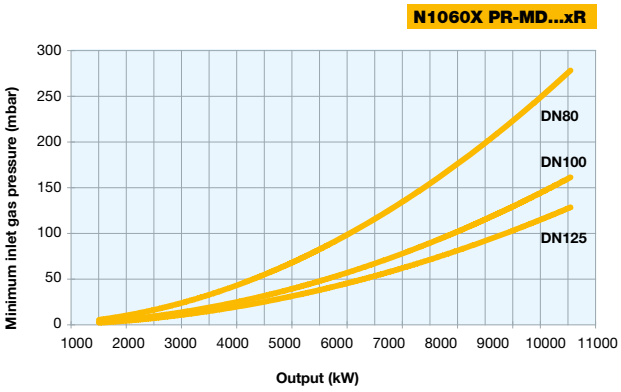

Attention: the graph shows the value of the gas output (kW) against the corresponding pressure without the combustion chamber back pressure. To know the minimum gas pressure at gas train, in order to get the gas output, it is necessary to add the boiler back pressure to the value read on the curve.

duemila SERIES RX2050R RX2050 RX2060 RX2080

GAS

Designed to satisfy the most demanding industrial applications, the array "DUEMILA series" **Low NO_x Class 3 (< 80 mg/kWh)** is the largest of the aluminium monoblock burners. It features an aluminium housing and a backward curved centrifugal impeller. The performance range of this array of product goes from 2.500 to 19.000 kW and its modulating ratio is 1:3. Higher modulating ratio (up to 1:10) is available, upon request, in those models with frequency inverter, O_2 probe and electronic control box.

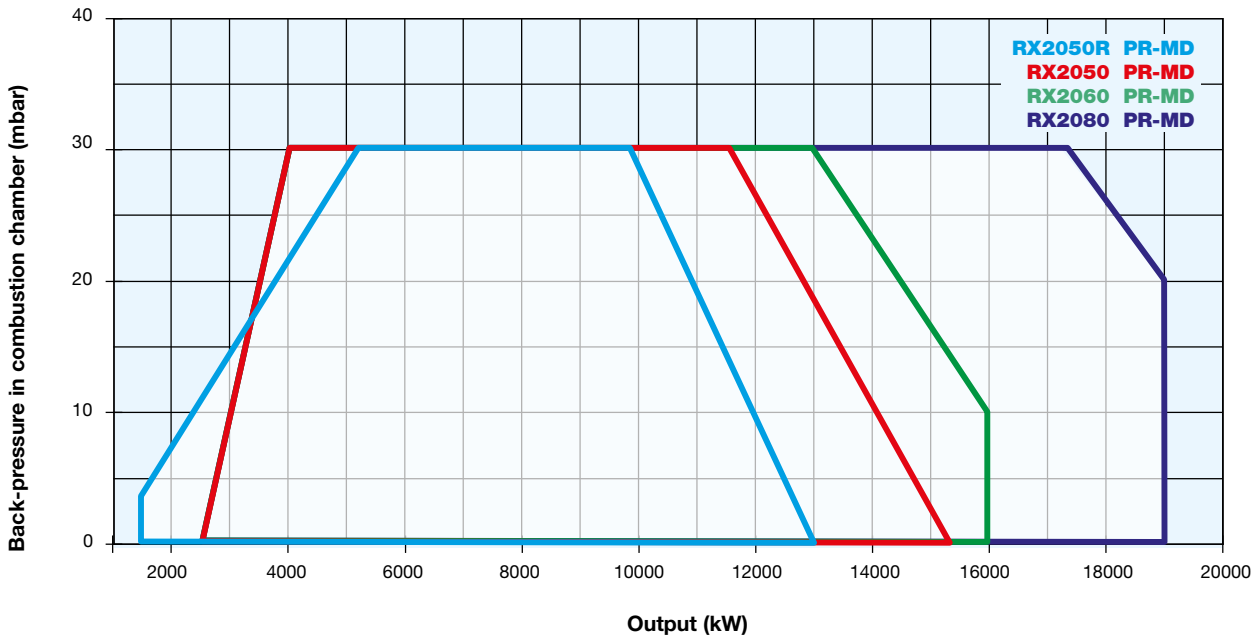

GAS

RX2050R RX2050 RX2060 RX2080

duemila SERIES

TECHNICAL DETAILS

Type	Model	Power kW		Auxiliary electrical power supply	Motor electrical power supply	Fan motor	Gas connections	Noise level
		min.	max.			kW		dBA
RX2050R	M-.xx.x.xx.A.1.xxx	1.780	13.000	230 V 1N AC 50 Hz	400 V 3 AC 50 Hz	37,0	DN80 - DN100 - DN125	92,5
RX2050	M-.xx.x.xx.A.1.xxx	2.500	15.200	230 V 1N AC 50 Hz	400 V 3 AC 50 Hz	37,0	DN80 - DN100 - DN125	92,5
RX2060	M-.xx.S.xx.A.1.xxx	2.500	16.000	230 V 1N AC 50 Hz	400 V 3 AC 50 Hz	45,0	DN80 - DN100 - DN125	91,7
RX2080	M-.xx.S.xx.A.1.xxx	2.500	19.000	230 V 1N AC 50 Hz	400 V 3 AC 50 Hz	55,0	DN100 - DN125	91,7

For the configuration of the gas train, see pages 116-117.

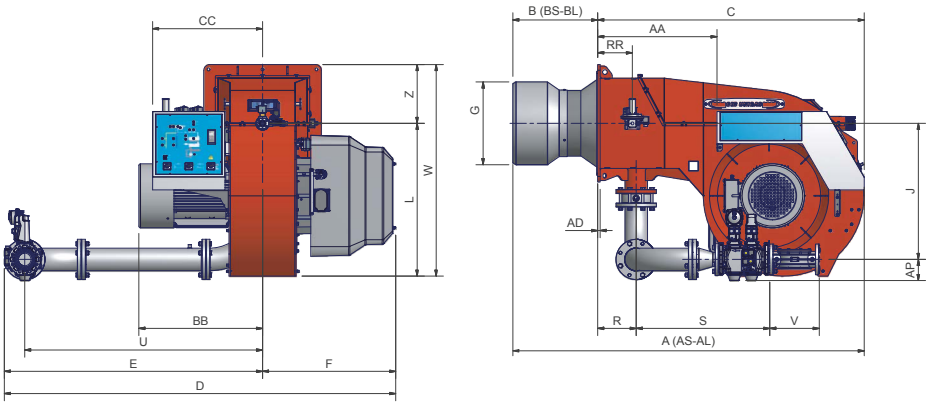

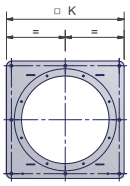

Burner flange

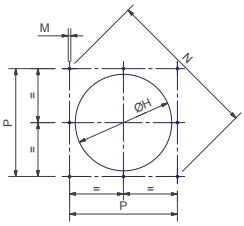

Suggested boiler drilling

Type	Packaging dimensions (mm)			
	l	p	h	kg
RX2050R	2.540	1.890	1.820	1.360
RX2050	2.540	1.890	1.820	1.390
RX2060	2.396	1.886	1.969	1.360
RX2080	2.396	1.886	1.969	1.460

Approximate values

Type	Model	Overall dimensions (mm)																										
		AA	AS	AL	AD	AP	BB	BS*	BL*	C	CC	D	E	F	G*	H*	J	K	L	M	N	P	R	RR	S	U	V	W	Z
RX2050R	M-.xx.x.xx.A.1.80	741	2160	2260	15	132	768	500	650	1660	735	2431	1604	827	545	595	845	730	949	M16	948	670	239	215	827	1478	310	1314	365
RX2050R	M-.xx.x.xx.A.1.100	741	2160	2260	15	145	768	500	650	1660	735	2447	1620	827	545	595	845	730	949	M16	948	670	239	215	874	1478	350	1314	365
RX2050R	M-.xx.x.xx.A.1.125	741	2160	2260	15	175	768	500	650	1660	735	2461	1634	827	545	595	845	730	949	M16	948	670	239	215	755	1478	480	1314	365
RX2050	M-.xx.x.xx.A.1.80	741	2160	2260	15	132	768	500	650	1660	735	2431	1604	827	545	595	845	730	949	M16	948	670	239	215	827	1478	310	1314	365
RX2050	M-.xx.x.xx.A.1.100	741	2160	2260	15	145	768	500	650	1660	735	2447	1620	827	545	595	845	730	949	M16	948	670	239	215	874	1478	350	1314	365
RX2050	M-.xx.x.xx.A.1.125	741	2160	2260	15	175	768	500	650	1660	735	2461	1634	827	545	595	845	730	949	M16	948	670	239	215	755	1478	480	1314	365
RX2060	M-.xx.S.xx.A.1.80	741	2160	-	15	132	807	500	-	1660	735	2309	1463	846	550	600	775	850	949	M16	1117	790	239	215	827	1336	310	1374	425
RX2060	M-.xx.S.xx.A.1.100	741	2160	-	15	145	807	500	-	1660	735	2325	1479	846	550	600	775	850	949	M16	1117	790	239	215	874	1336	350	1374	425
RX2060	M-.xx.S.xx.A.1.125	741	2160	-	15	175	807	500	-	1660	735	2343	1497	846	550	600	775	850	949	M16	1117	790	239	215	755	1336	480	1374	425
RX2080	M-.xx.S.xx.A.1.100	741	2180	-	15	145	885	520	-	1660	735	2325	1479	846	700	750	775	850	949	M16	1117	790	239	215	874	1336	350	1374	425
RX2080	M-.xx.S.xx.A.1.125	741	2180	-	15	175	885	520	-	1660	735	2343	1497	846	700	750	775	850	949	M16	1117	790	239	215	755	1336	480	1374	425

* The BS, BL, G, H dimensions must be confirmed from our DPT.
Approximate values

RX2050R RX2050 RX2060 RX2080

GAS

Monoblock burners 2000 series are supplied complete with a steel supporting frame: burner installation and manutention are greatly simplified.
The frame is equipped with wheels to easily move the burner, and its height is adjustable to match any type of boiler or furnace.

SUPPORTING FRAME FOR BURNERS 2050 SERIES

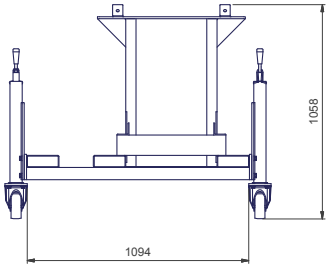

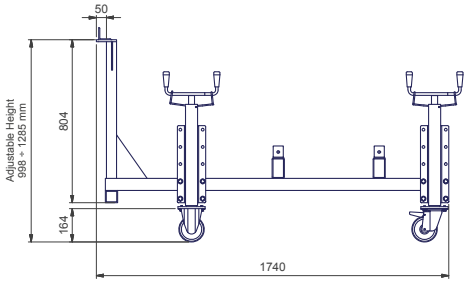

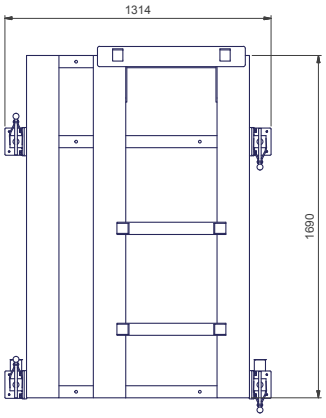

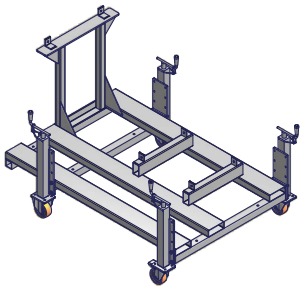

SUPPORTING FRAME FOR BURNERS 2060/2080 SERIES

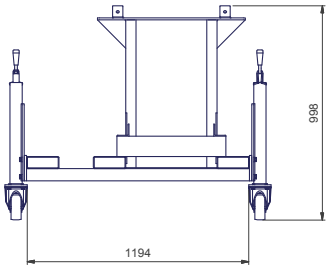

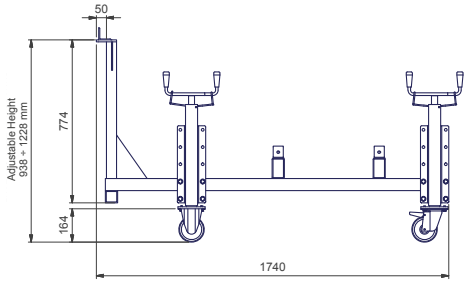

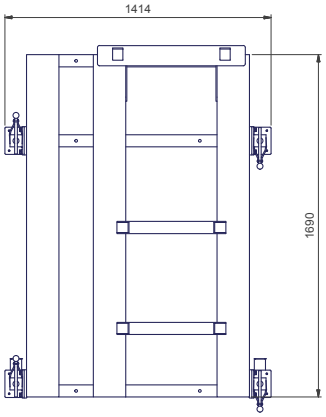

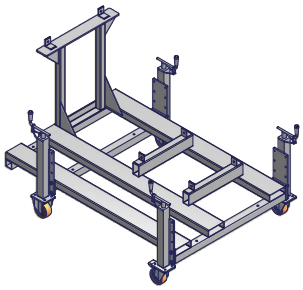

RX2050R RX2050 RX2060 RX2080

duemila SERIES

ELECTRONIC OPERATION

Model	Gas train	Operation	RX2050R Code	RX2050R Price €	RX2050 Code	RX2050 Price €
M-.PR.S.xx.A.1.80.EA	DN80	PR	03201195A		03201255A	
M-.PR.L.xx.A.1.80.EA	DN80	PR	03201205A		03201265A	
M-.PR.S.xx.A.1.100.EA	DN100	PR	03201215A		03201275A	
M-.PR.L.xx.A.1.100.EA	DN100	PR	03201225A		03201285A	
M-.PR.S.xx.A.1.125.EA	DN125	PR	03201235A		03201295A	
M-.PR.L.xx.A.1.125.EA	DN125	PR	03201245A		03201305A	
M-.MD.S.xx.A.1.80.EA	DN80	MD(*)	03201195E		03201255E	
M-.MD.L.xx.A.1.80.EA	DN80	MD(*)	03201205E		03201265E	
M-.MD.S.xx.A.1.100.EA	DN100	MD(*)	03201215E		03201275E	
M-.MD.L.xx.A.1.100.EA	DN100	MD(*)	03201225E		03201285E	
M-.MD.S.xx.A.1.125.EA	DN125	MD(*)	03201235E		03201295E	
M-.MD.L.xx.A.1.125.EA	DN125	MD(*)	03201245E		03201305E	
M-.MD.S.xx.A.1.80.ES	DN80	MD(*)	03201195S		03201255S	
M-.MD.L.xx.A.1.80.ES	DN80	MD(*)	03201205S		03201265S	
M-.MD.S.xx.A.1.100.ES	DN100	MD(*)	03201215S		03201275S	
M-.MD.L.xx.A.1.100.ES	DN100	MD(*)	03201225S		03201285S	
M-.MD.S.xx.A.1.125.ES	DN125	MD(*)	03201235S		03201295S	
M-.MD.L.xx.A.1.125.ES	DN125	MD(*)	03201245S		03201305S	

Model	Gas train	Operation	RX2060 Code	RX2060 Price €	RX2080 Code	RX2080 Price €
M-.MD.S.xx.A.1.80.ES	DN80	MD(*)	03201135S			
M-.MD.S.xx.A.1.100.ES	DN100	MD(*)	03201145S		03201175S	
M-.MD.S.xx.A.1.125.ES	DN125	MD(*)	03201155S		03201185S	

(*) In order for the supply to be completed, the burner must be equipped with the respective modulating probe (see accessory table, page 290).
In compliance with GAR DIRECTIVE 2016/426/EU.

RX2050R RX2050 RX2060 RX2080

GAS

RX2050R PR-MD

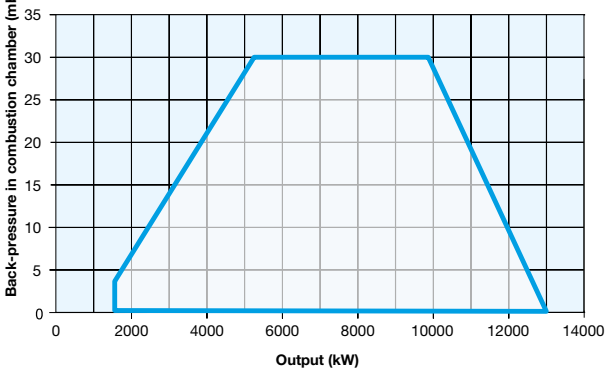

RX2050 PR-MD

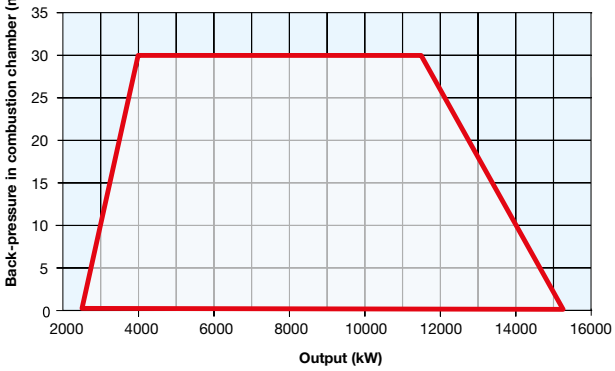

RX2060 PR-MD

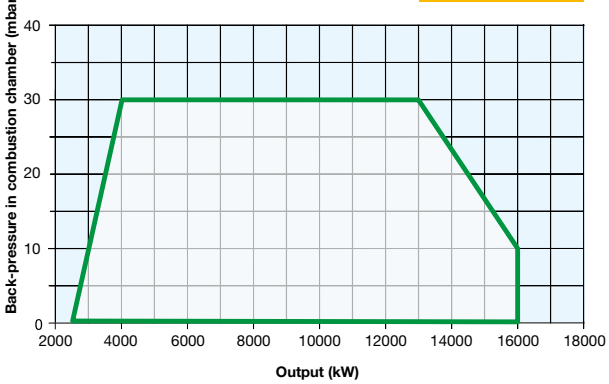

RX2080 PR-MD

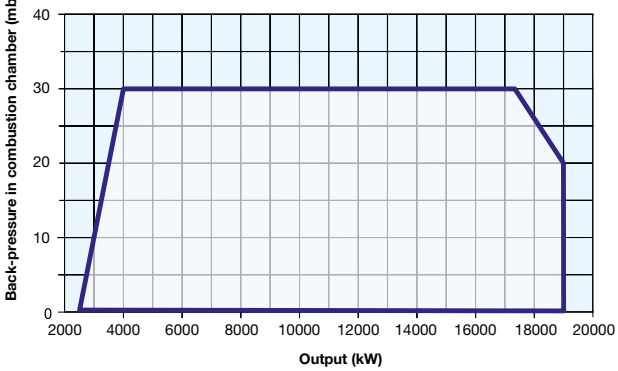

RX2050R PR-MD

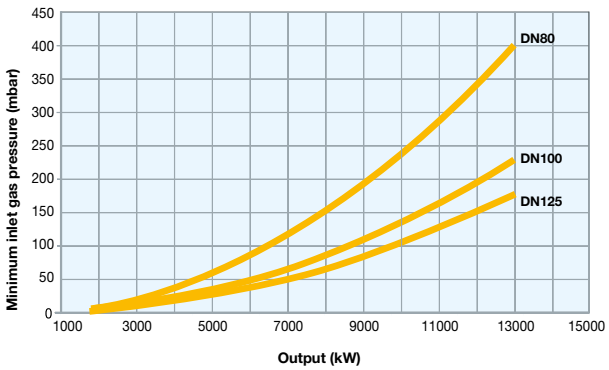

RX2050 PR-MD

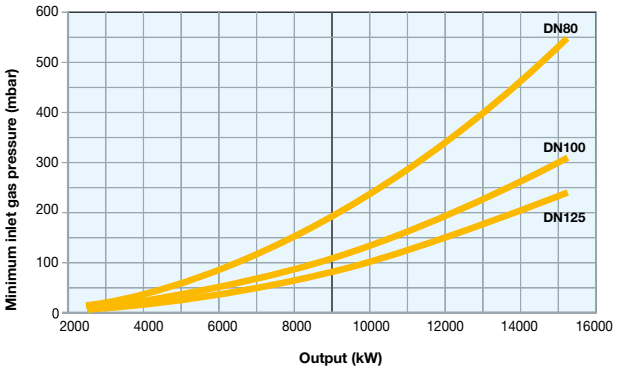

RX2060 PR-MD

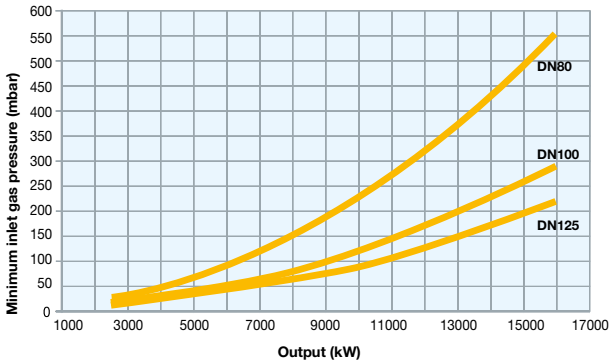

RX2080 PR-MD

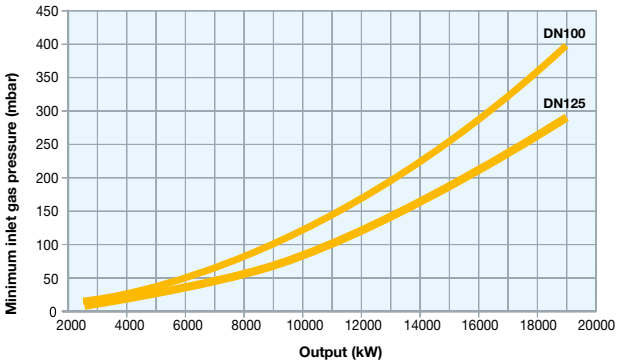

Attention: the graph shows the value of the gas output (kW) against the corresponding pressure without the combustion chamber back pressure. To know the minimum gas pressure at gas train, in order to get the gas output, it is necessary to add the boiler back pressure to the value read on the curve.

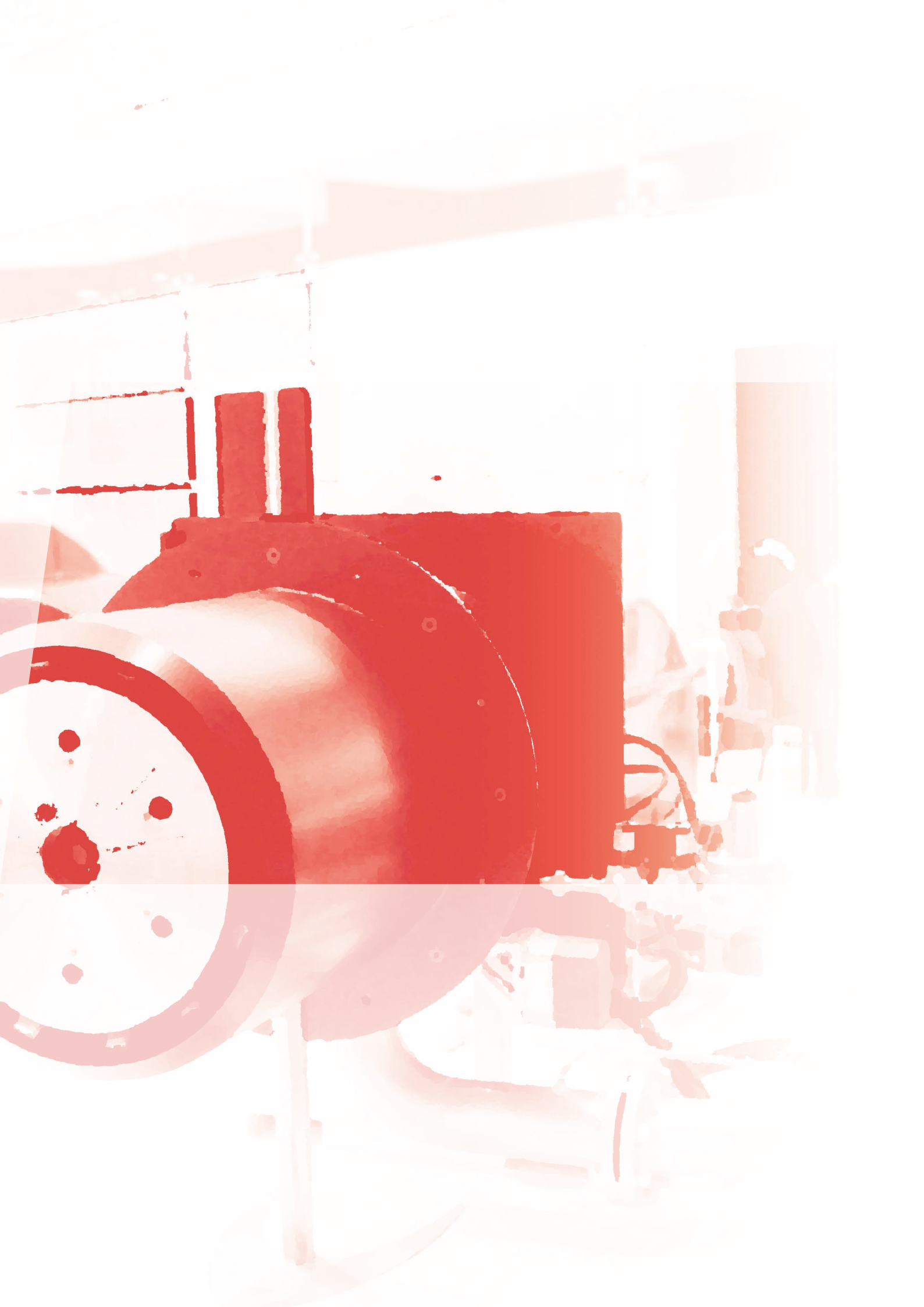

GAS TRAINS SIEMENS VGD

MANUFACTURER | INSTALLER

Gas train with valve group VGD,
c/w built-in pressure governor
+ leakage control pressure switch.

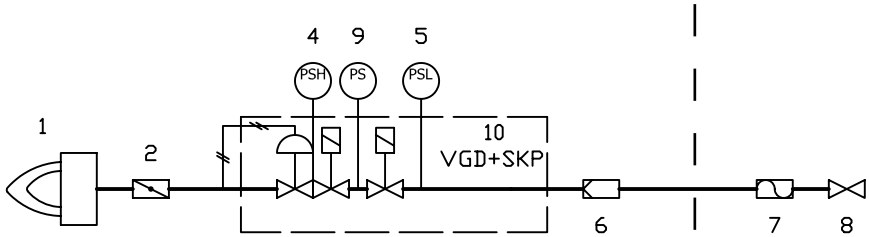

Gas train with valve group VGD,
c/w built-in pressure governor
+ leakage control pressure switch.
Pilot train with
double valve and filter/governor.

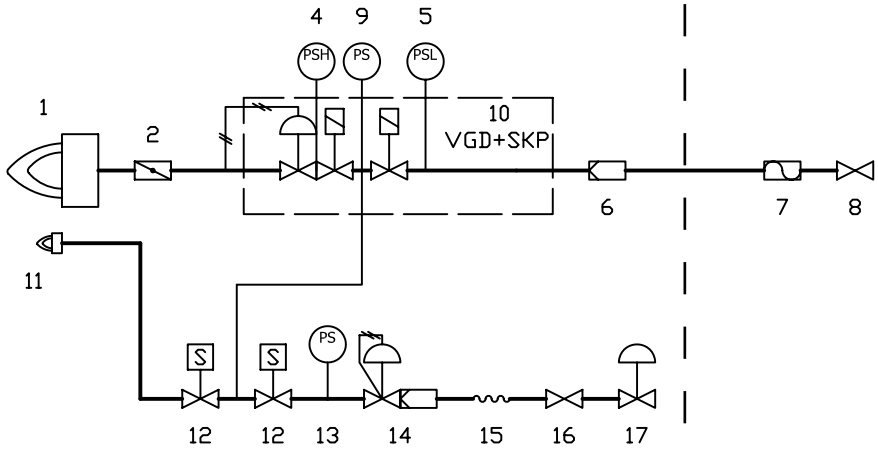

Pilot train with double valve and pressure
governor with filter.

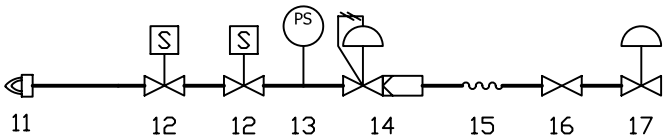

KEY

1	Burner
2	Butterfly valve
3	-
4	Maximum gas pressure switch (optional)
5	Minimum gas pressure switch
6	Gas filter
7	Anti-vibrating joint
8	Manual cut off valve
9	Leakage control pressure switch
10	Valves group VGD
11	Pilot burner
12	Pilot valve
13	Pilot minimum gas pressure switch
14	Pilot pressure governor
15	Pilot anti-vibrating joint (optional)
16	Pilot manual cut off valve (optional)
17	Pilot gas reducer (optional)

MANUFACTURER | INSTALLER

Gas train with valve group MBE,
c/w built-in pressure governor
+ leakage control pressure switch
+ max pressure switch.

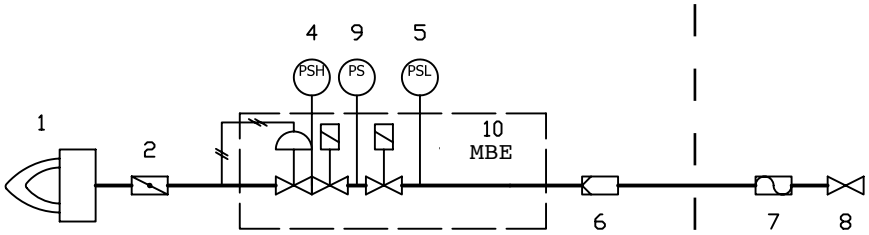

Gas train with valve group MBE,
c/w built-in pressure governor
+ leakage control pressure switch
+ max pressure switch.
Pilot train with
double valve and filter/governor.

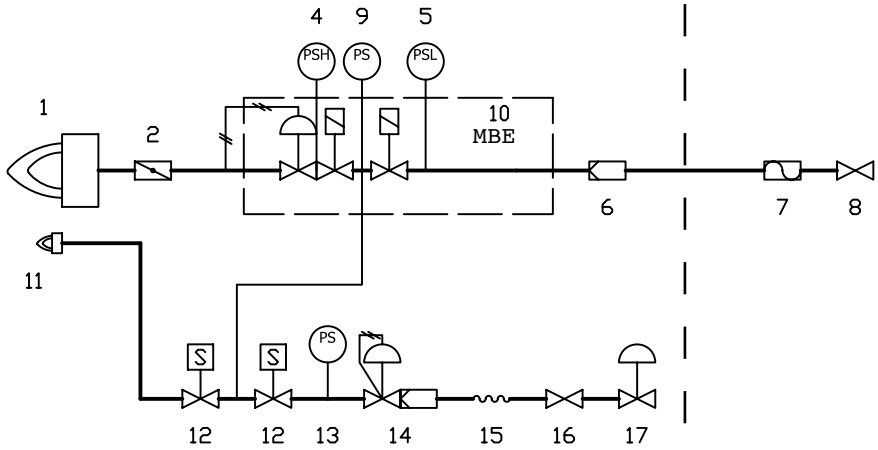

Pilot train with double valve and pressure
governor with filter.

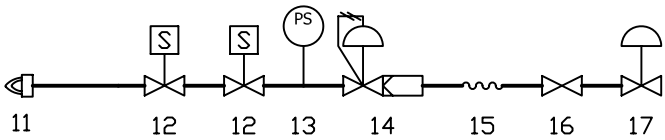

KEY

1	Burner
2	Butterfly valve
3	-
4	Maximum gas pressure switch
5	Minimum gas pressure switch
6	Gas filter
7	Anti-vibrating joint
8	Manual cut off valve
9	Leakage control pressure switch
10	Valves group MBE
11	Pilot burner
12	Pilot valve
13	Pilot minimum gas pressure switch
14	Pilot pressure governor
15	Pilot anti-vibrating joint (optional)
16	Pilot manual cut off valve (optional)
17	Pilot gas reducer (optional)

LIGHT OIL BURNERS

novanta series	cinquecento series	mille series	duemila series
RG91 - AB/PR/MD	**RG510** - PR/MD	**RG1030** - PR/MD	**RG2050** - PR/MD
RG92 - PR/MD	**RG515** - PR/MD	**RG1040** - PR/MD	**RG2060** - PR/MD
RG93 - PR/MD	**RG520** - PR/MD		**RG2080** - PR/MD
	RG525 - PR/MD		

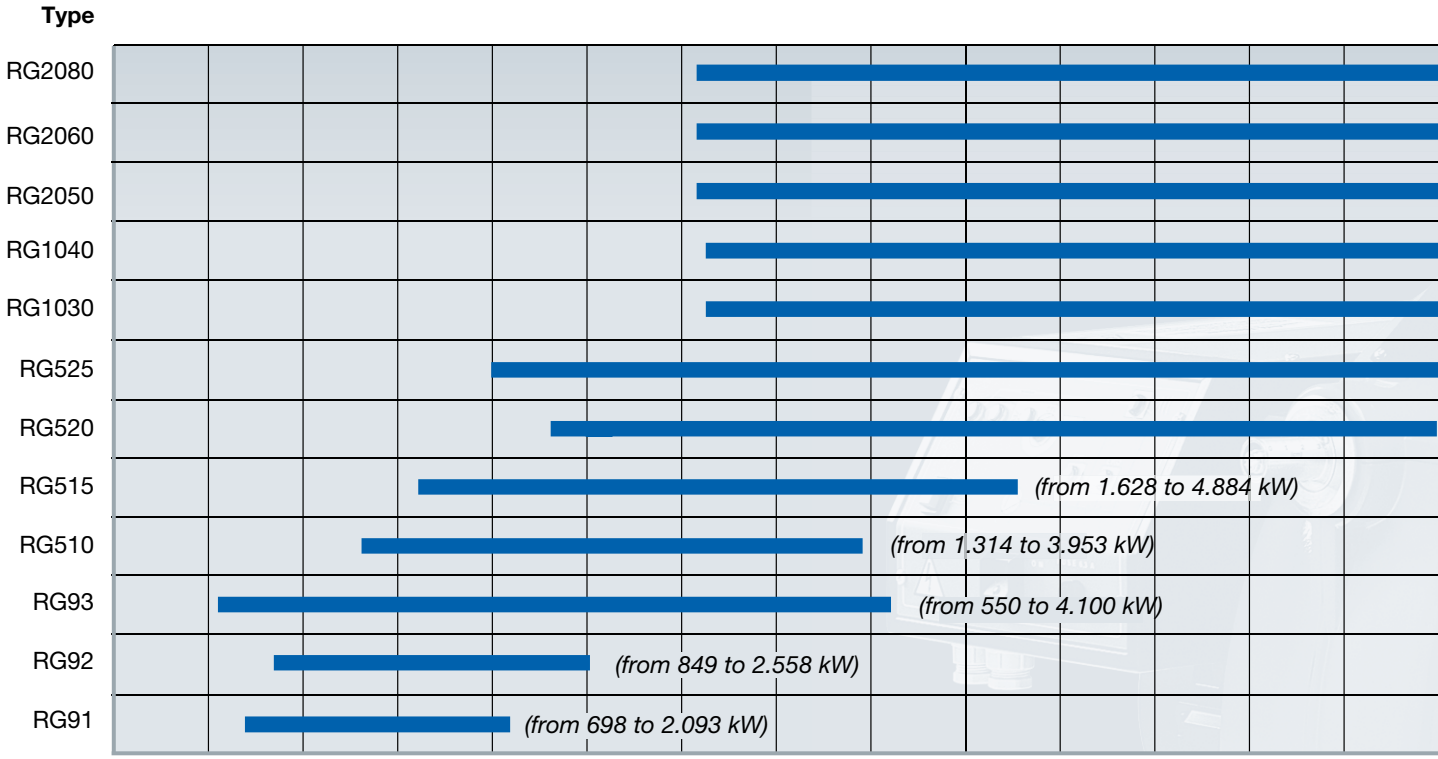

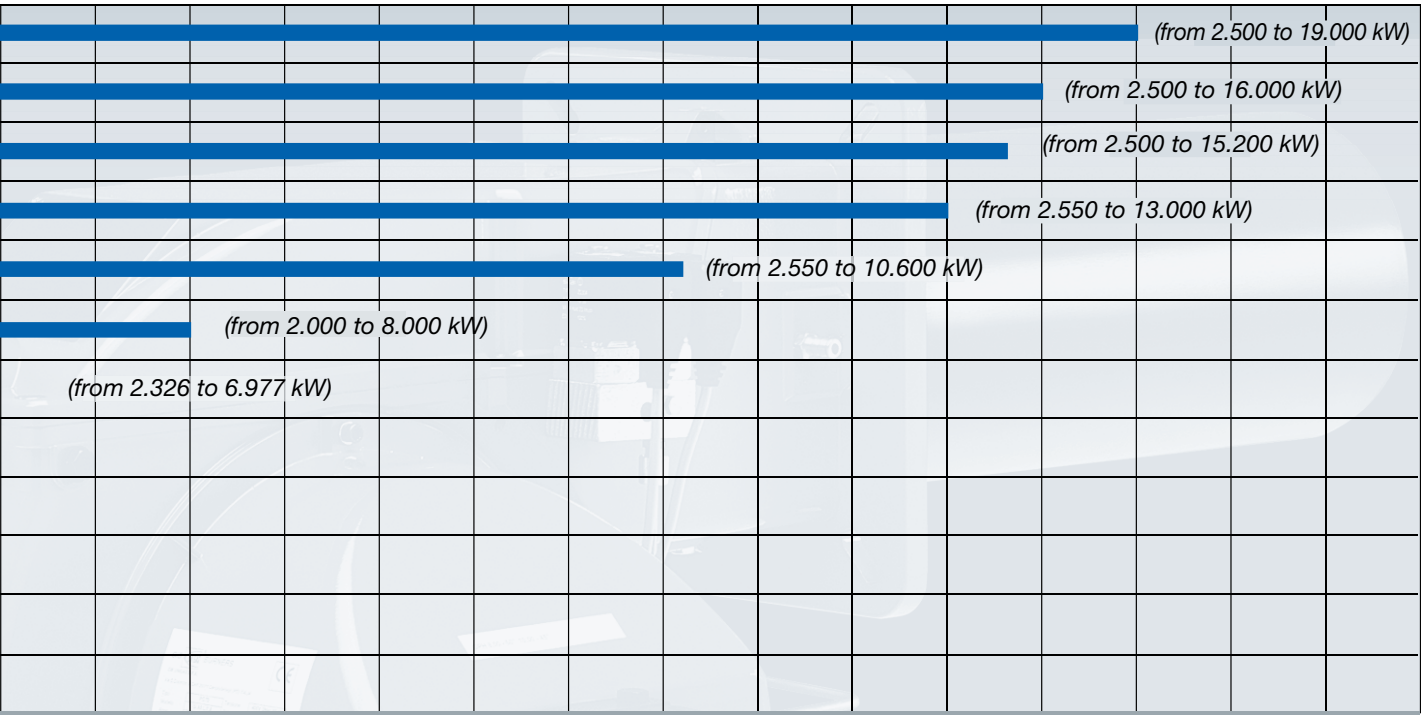
(from 2.500 to 19.000 kW)
(from 2.500 to 16.000 kW)
(from 2.500 to 15.200 kW)
(from 2.550 to 13.000 kW)
(from 2.550 to 10.600 kW)
(from 2.000 to 8.000 kW)
(from 2.326 to 6.977 kW)

novanta SERIES RG1 RG92 RG93

This series of monoblock burners made of a solid die-cast aluminium housing, represents the outcome of our experience in the field of medium-large capacity burners. This version of burners owns a centrifugal air fan activated by a three phase motor, while the oil pump works through a dedicated motor.
The burners of series NOVANTA, with a capacity up to 4.100 kW.
Both series are equipped with a by-passing nozzle that allows a modulating ratio of 1:3.
The light oil output can be adjusted through a pressure regulator which effects on the return pipe line.
All burners have a control panel which includes the control box and the regulators of temperature and pressure. Furthermore they own a mimic diagram with lamps showing the sequential stages of the burner operation.

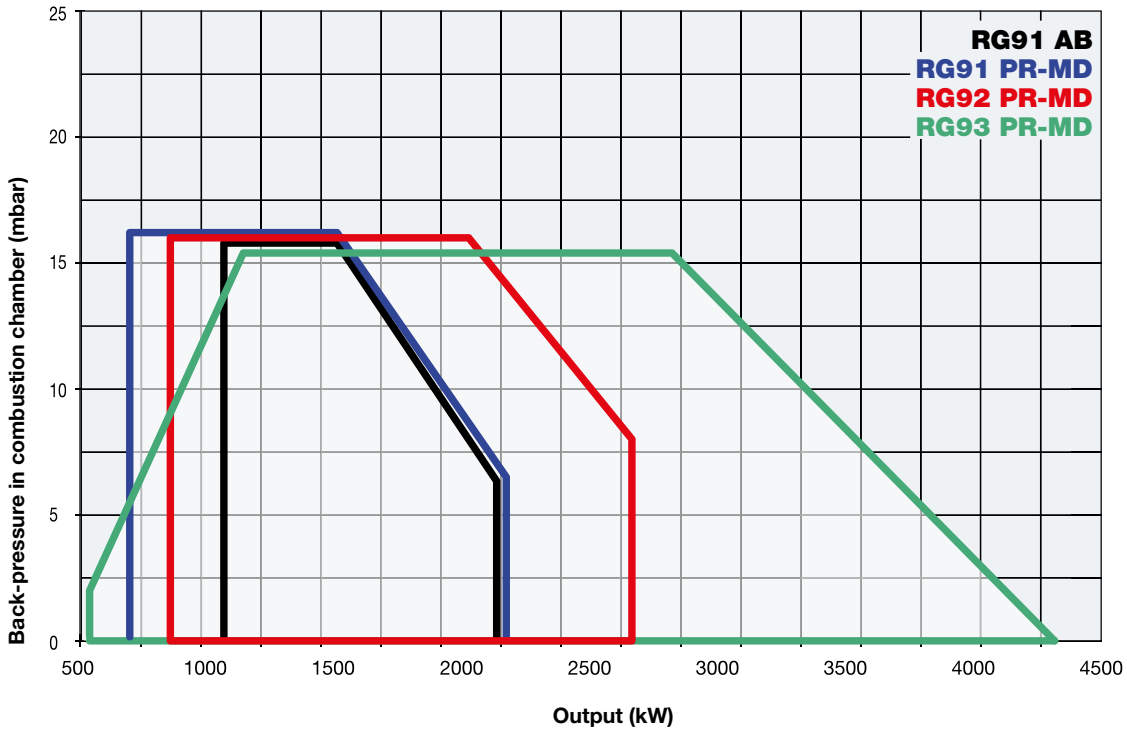

TECHNICAL DETAILS

Type	Model	Power kW		Auxiliary electrical power supply	Motor electrical power supply	Fan motor	Pump motor	Noise level
		min.	max.			kW	kW	dBA
RG91	G-.AB.x.xx.A	1.047	2.093	230 V 1N AC 50 Hz	400 V 3 AC 50 Hz	4,0	1,1	74,5
RG91	G-.xx.x.xx.A	698	2.093	230 V 1N AC 50 Hz	400 V 3 AC 50 Hz	4,0	1,1	74,5
RG92	G-.xx.x.xx.A	849	2.558	230 V 1N AC 50 Hz	400 V 3 AC 50 Hz	5,5	1,1	76,9
RG93	G-.xx.x.xx.A	550	4.100	230 V 1N AC 50 Hz	400 V 3 AC 50 Hz	7,5	1,1	77,4

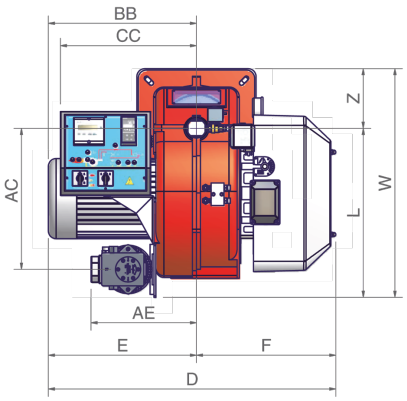

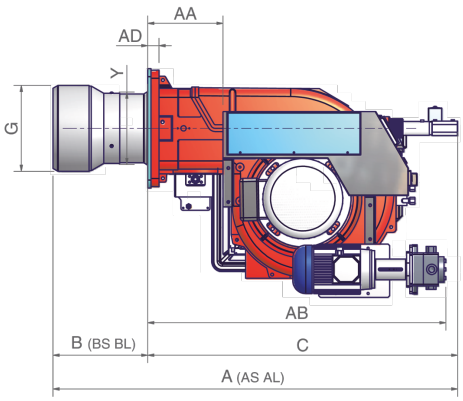

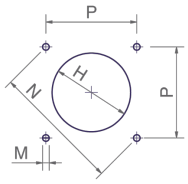

Suggested boiler drilling

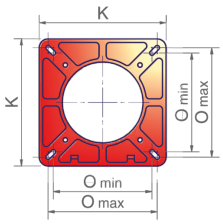

Burner flange

Type	Packaging dimensions (mm)			
	l	p	h	kg
RG91	1730	1280	1020	230
RG92	1730	1280	1020	270
RG93	1730	1430	1130	290

Approximate values

Type	Model	Overall dimensions (mm)																									
		AA	AS	AL	AB	AC	AD	AE	BB	BS	BL	C	CC	D	E	F	G	H	K	L	M	N	O min.	O max.	P	W	Y	Z
RG91	G-.xx.x.xx.A	242	1259	1432	925	436	35	327	419	300	473	959	422	853	419	434	238	268	360	523	M12	424	280	310	300	708	228	185
RG92	G-.xx.x.xx.A	242	1253	1426	925	436	35	327	419	294	467	959	422	853	419	434	266	296	360	523	M12	424	280	310	300	708	228	185
RG93	G-.xx.x.xx.A	242	1260	1450	925	436	35	327	460	301	491	959	422	894	460	434	292	322	360	523	M12	424	280	310	300	708	228	185

Approximate values

MECHANICAL OPERATION

		RG91		RG92		RG93	
Model	Operation	Code	Price €	Code	Price €	Code	Price €
G-.AB.S.xx.A	AB	012050902		-		-	
G-.AB.L.xx.A	AB	012051002		-		-	
G-.PR.S.xx.A	PR	012050903		012051103		012051303	
G-.PR.L.xx.A	PR	012051003		012051203		012051403	
G-.MD.S.xx.A	MD(*)	012050904		012051104		012051304	
G-.MD.L.xx.A	MD(*)	012051004		012051204		012051404	

(*) In order for the supply to be completed, the burner must be equipped with the respective modulating probe (see accessory table, page 290).
In compliance with:
Low Tension Directive 2014/35/UE
Electromagnetic Compatibility Directive 2014/30/UE
Machinery Directive 2006/42/CE

ELECTRONIC OPERATION

		RG91		RG92		RG93	
Model	Operation	Code	Price €	Code	Price €	Code	Price €
G-.PR.S.xx.A.EA	PR	01205090A		01205110A		01205130A	
G-.PR.L.xx.A.EA	PR	01205100A		01205120A		01205140A	
G-.MD.S.xx.A.EA	MD(*)	01205090E		01205110E		01205130E	
G-.MD.L.xx.A.EA	MD(*)	01205100E		01205120E		01205140E	
G-.MD.S.xx.A.ES	MD(*)	01205090S		01205110S		01205130S	
G-.MD.L.xx.A.ES	MD(*)	01205100S		01205120S		01205140S	

(*) In order for the supply to be completed, the burner must be equipped with the respective modulating probe (see accessory table, page 290).
In compliance with:
Low Tension Directive 2014/35/UE
Electromagnetic Compatibility Directive 2014/30/UE
Machinery Directive 2006/42/CE

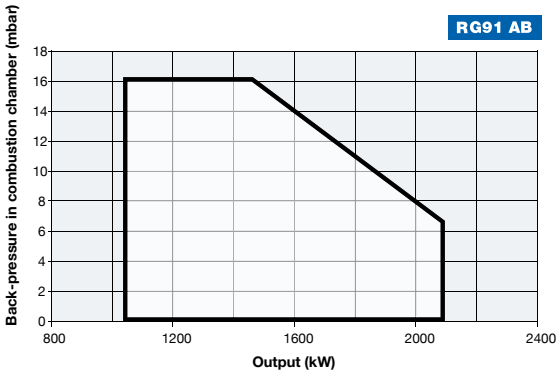
RG91 AB
Back-pressure in combustion chamber (mbar)
0
2
4
6
8
10
12
14
16
18
800
1200
1600
2000
2400
Output (kW)

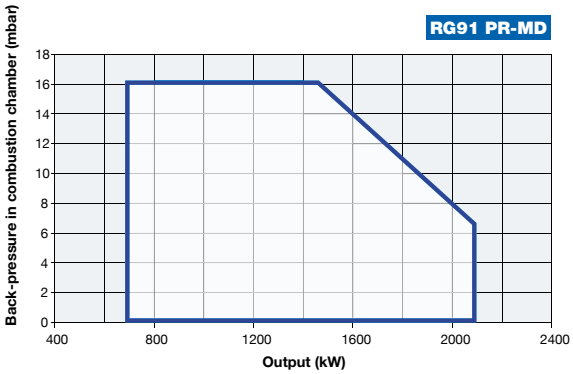
RG91 PR-MD
Back-pressure in combustion chamber (mbar)
0
2
4
6
8
10
12
14
16
18
400
800
1200
1600
2000
2400
Output (kW)

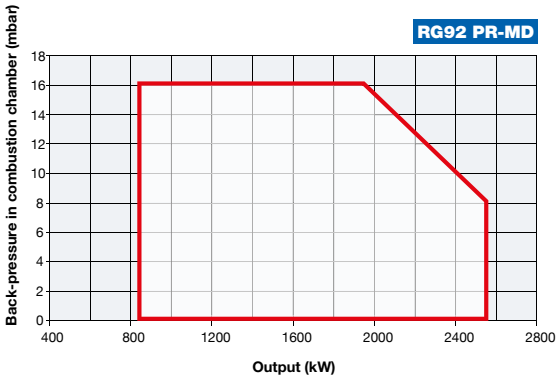
RG92 PR-MD
Back-pressure in combustion chamber (mbar)
0
2
4
6
8
10
12
14
16
18
400
800
1200
1600
2000
2400
2800
Output (kW)

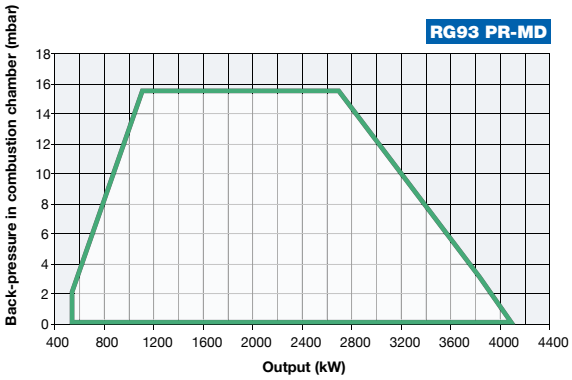
RG93 PR-MD
Back-pressure in combustion chamber (mbar)
0
2
4
6
8
10
12
14
16
18
400
800
1200
1600
2000
2400
2800
3200
3600
4000
4400
Output (kW)

RG510 RG515 RG520 RG525

This series of monoblock burners made of a solid die-cast aluminium housing, represents the outcome of our experience in the field of medium-large capacity burners.
This version of burners owns a centrifugal air fan activated by a three phase motor, while the oil pump works through a dedicated motor.
The burners of series CINQUECENTO, with a capacity up to 8.000 kW.
Both series are equipped with a by-passing nozzle that allows a modulating ratio of 1:3.
The light oil output can be adjusted through a pressure regulator which effects on the return pipe line.
All burners have a control panel which includes the control box and the regulators of temperature and pressure. Furthermore they own a mimic diagram with lamps showing the sequential stages of the burner operation.

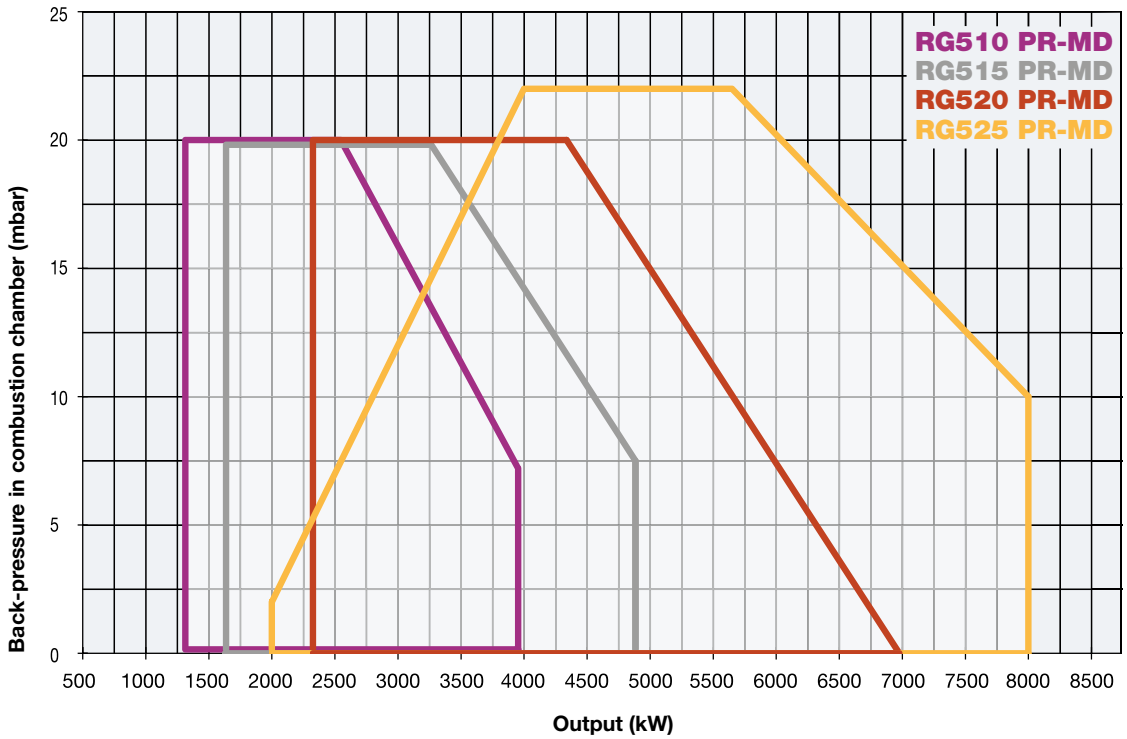

RG510 RG515 RG520 RG525 cinquecento SERIES

TECHNICAL DETAILS

Type	Model	Power kW		Auxiliary electrical power supply	Motor electrical power supply	Fan motor	Pump motor	Noise level
		min.	max.			kW	kW	dBA
RG510	G-.xx.x.xx.A	1.314	3.953	230 V 1N AC 50 Hz	400 V 3 AC 50 Hz	7,5	1,1	81,7
RG515	G-.xx.x.xx.A	1.628	4.884	230 V 1N AC 50 Hz	400 V 3 AC 50 Hz	11,0	1,5	82,3
RG520	G-.xx.x.xx.A	2.326	6.977	230 V 1N AC 50 Hz	400 V 3 AC 50 Hz	15,0	1,5	83,2
RG525	G-.xx.x.xx.A	2.000	8.000	230 V 1N AC 50 Hz	400 V 3 AC 50 Hz	18,5	3,0	84,9

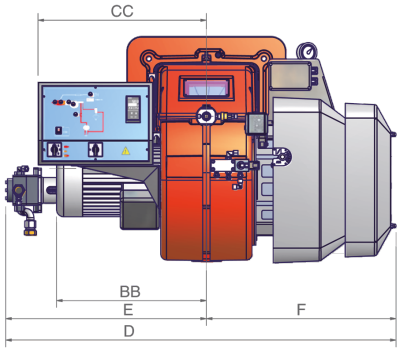

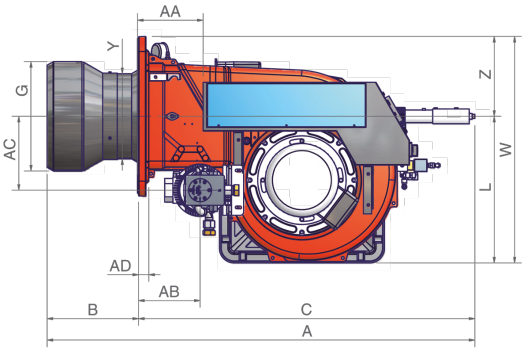

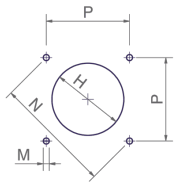

Suggested boiler drilling

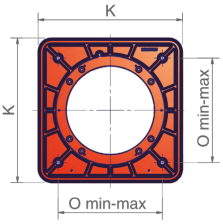

Burner flange

Type	Packaging dimensions (mm)			
	l	p	h	kg
RG510/515/520	1720	1500	1150	330
RG525	1800	1500	1300	350

Approximate values

Type	Model	Overall dimensions (mm)																								
		AA	AS	AL	AB	AC	AD	BB	BS	BL	C	CC	D	E	F	G	H	K	L	M	N	O	P	W	Y	Z
RG510	G-.xx.x.xx.A	219	1451	1671	217	246	35	468	310	530	1141	571	1314	671	643	329	369	540	496	M14	552	390	390	766	328	270
RG515	G-.xx.x.xx.A	219	1451	1671	217	246	35	508	310	530	1141	571	1324	681	643	350	390	540	496	M14	552	390	390	766	328	270
RG520	G-.xx.x.xx.A	219	1451	1671	207	250	35	508	310	530	1141	571	1324	681	643	370	410	540	496	M14	552	390	390	880	328	270
RG525	G-.xx.x.xx.A	219	1511	1691	197	275	35	650	350	530	1161	571	1341	698	643	434	484	540	496	M14	552	390	390	938	434	270

Approximate values

MECHANICAL OPERATION

Model	Operation	RG510 Code	RG510 Price €	RG515 Code	RG515 Price €
G-.PR.S.xx.A	PR	029050103		029050303	
G-.PR.L.xx.A	PR	029050203		029050403	
G-.MD.S.xx.A	MD(*)	029050104		029050304	
G-.MD.L.xx.A	MD(*)	029050204		029050404	

Model	Operation	RG520 Code	RG520 Price €	RG525 Code	RG525 Price €
G-.PR.S.xx.A	PR	029050503		029050703	
G-.PR.L.xx.A	PR	029050603		029050803	
G-.MD.S.xx.A	MD(*)	029050504		029050704	
G-.MD.L.xx.A	MD(*)	029050604		029050804	

(*) In order for the supply to be completed, the burner must be equipped with the respective modulating probe (see accessory table, page 290).
In compliance with:
Low Tension Directive 2014/35/UE
Electromagnetic Compatibility Directive 2014/30/UE
Machinery Directive 2006/42/CE

ELECTRONIC OPERATION

Model	Operation	RG510 Code	RG510 Price €	RG515 Code	RG515 Price €
G-.PR.S.xx.A.EA	PR	02905010A		02905030A	
G-.PR.L.xx.A.EA	PR	02905020A		02905040A	
G-.MD.S.xx.A.EA	MD(*)	02905010E		02905030E	
G-.MD.L.xx.A.EA	MD(*)	02905020E		02905040E	
G-.MD.S.xx.A.ES	MD(*)	02905010S		02905030S	
G-.MD.L.xx.A.ES	MD(*)	02905020S		02905040S	

Model	Operation	RG520 Code	RG520 Price €	RG525 Code	RG525 Price €
G-.PR.S.xx.A.EA	PR	02905050A		02905070A	
G-.PR.L.xx.A.EA	PR	02905060A		02905080A	
G-.MD.S.xx.A.EA	MD(*)	02905050E		02905070E	
G-.MD.L.xx.A.EA	MD(*)	02905060E		02905080E	
G-.MD.S.xx.A.ES	MD(*)	02905050S		02905070S	
G-.MD.L.xx.A.ES	MD(*)	02905060S		02905080S	

(*) In order for the supply to be completed, the burner must be equipped with the respective modulating probe (see accessory table, page 290).
In compliance with:
Low Tension Directive 2014/35/UE
Electromagnetic Compatibility Directive 2014/30/UE
Machinery Directive 2006/42/CE

RG510 RG515 RG520 RG525 cinquecento SERIES

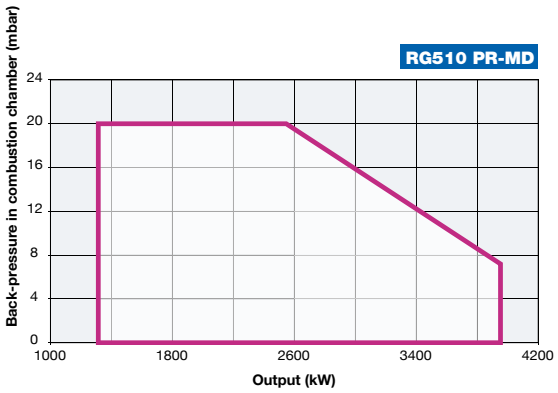

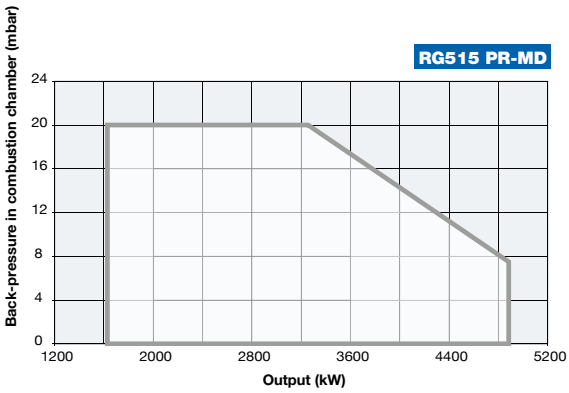

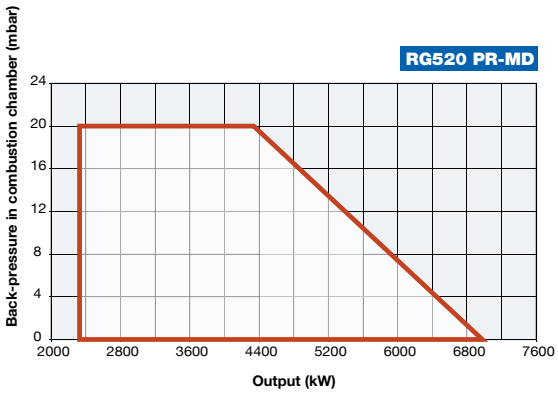

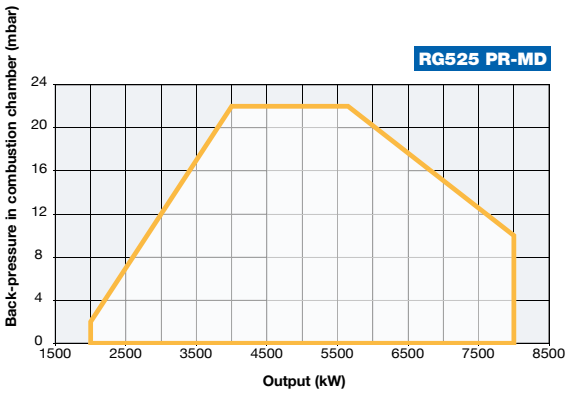

RG1030 RG1040

This series of monoblock burners made of a solid die-cast aluminium housing, represents the outcome of our experience in the field of medium-large capacity burners. This version of burners owns a centrifugal air fan activated by a three phase motor, while the oil pump works through a dedicated motor. This range of the series MILLE with a capacity from 2.550 kW to 13.000 kW.
Both series are equipped with a by-passing nozzle that allows a modulating ratio of 1:3. The light oil output can be adjusted through a pressure regulator which effects on the return pipe line.
All burners have a control panel which includes the control box and the regulators of temperature and pressure. Furthermore they own a mimic diagram with lamps showing the sequential stages of the burner operation.

Electronic set up (optional)

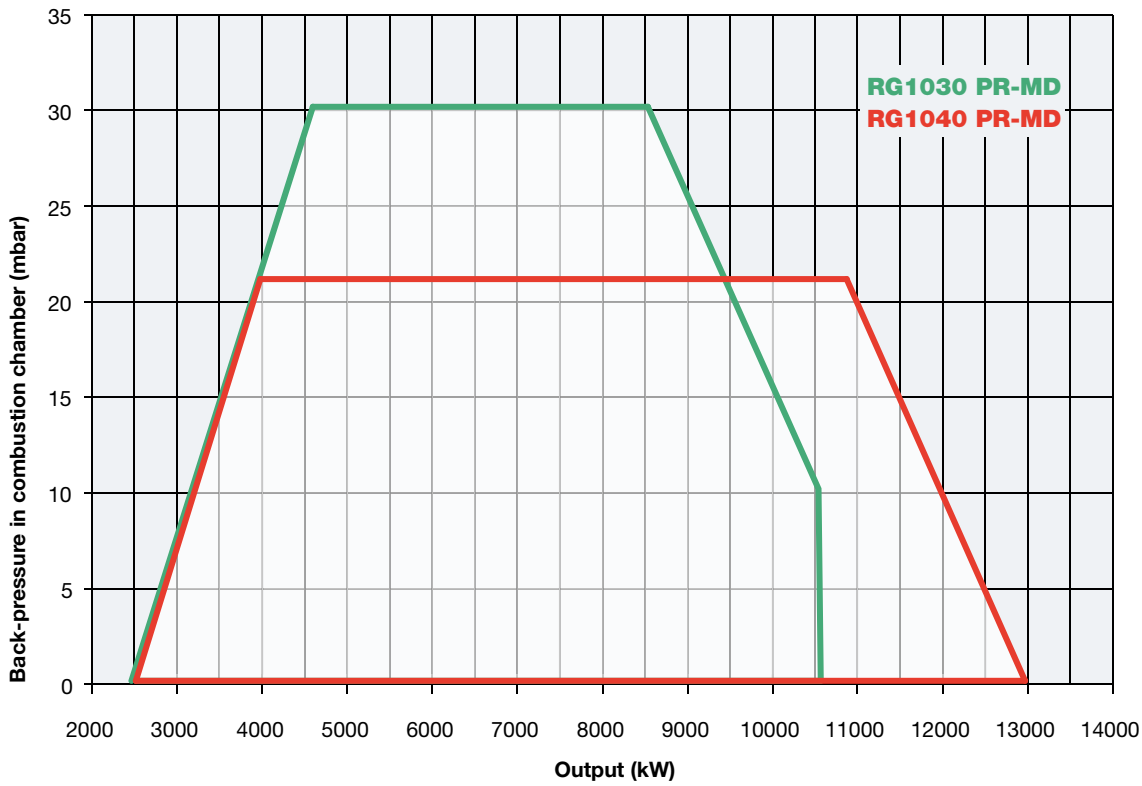

TECHNICAL DETAILS

Type	Model	Power kW		Auxiliary electrical power supply	Motor electrical power supply	Fan motor	Pump motor	Noise level
		min.	max.			kW	kW	dBA
RG1030	G-.xx.x.xx.A	2.550	10.600	230 V 1N AC 50 Hz	400 V 3 AC 50 Hz	22	4	85,6
RG1040	G-.xx.x.xx.A	2.550	13.000	230 V 1N AC 50 Hz	400 V 3 AC 50 Hz	30	5,5	85,6

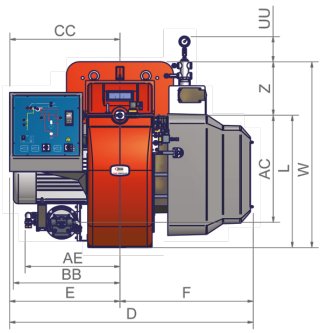

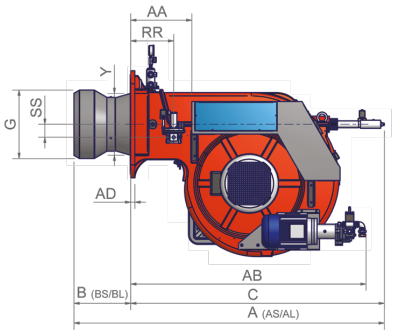

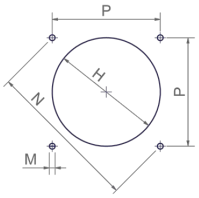

Suggested boiler drilling

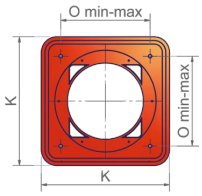

Burner flange

Type	Packaging dimensions (mm)			
	l	p	h	kg
RG1030/1040	2270	1720	1320	700

Approximate values

Type	Model	Overall dimensions (mm)																											
		A (AS)	A (AL)	AA	AB	AC	AD	AE	B (BS)	B (BL)	BB	C	CC	D	E	F	G	H	K	L	M	N	O	P	RR	SS	UU	W	Y	Z
RG1030	G-.xx.x.xx.A	1914	2108	377	1452	651	25	585	350	544	657	1564	680	1502	680	822	422	472	660	816	M16	651	460	460	265	80	142	1146	379	330
RG1040	G-.xx.x.xx.A	1925	2119	377	1452	651	25	585	350	544	657	1575	680	1502	680	822	671	731•	660	816	M16	651	460	460	265	80	142	1146	404	330

Approximate values

- Install a counter-flange between the burner and the boiler or in alternative, drill the H hole smaller but higher than the Y point and assemble the blast tube inside the boiler.

MECHANICAL OPERATION

Model	Operation	RG1030 Code	RG1030 Price €	RG1040 Code	RG1040 Price €
G-.PR.S.xx.A	PR	023050203		023050303	
G-.PR.L.xx.A	PR	023050503		023050603	
G-.MD.S.xx.A	MD(*)	023050204		023050304	
G-.MD.L.xx.A	MD(*)	023050504		023050604	

(*) In order for the supply to be completed, the burner must be equipped with the respective modulating probe (see accessory table, page 290).
In compliance with:
Low Tension Directive 2014/35/UE
Electromagnetic Compatibility Directive 2014/30/UE
Machinery Directive 2006/42/CE

ELECTRONIC OPERATION

Model	Operation	RG1030 Code	RG1030 Price €	RG1040 Code	RG1040 Price €
G-.PR.S.xx.A.EA	PR	02305070A		02305110A	
G-.PR.L.xx.A.EA	PR	02305080A		02305120A	
G-.MD.S.xx.A.EA	MD(*)	02305070E		02305110E	
G-.MD.L.xx.A.EA	MD(*)	02305080E		02305120E	
G-.MD.S.xx.A.ES	MD(*)	02305020S		02305060S	
G-.MD.L.xx.A.ES	MD(*)	02305050S		02305060S	

(*) In order for the supply to be completed, the burner must be equipped with the respective modulating probe (see accessory table, page 290).
In compliance with:
Low Tension Directive 2014/35/UE
Electromagnetic Compatibility Directive 2014/30/UE
Machinery Directive 2006/42/CE

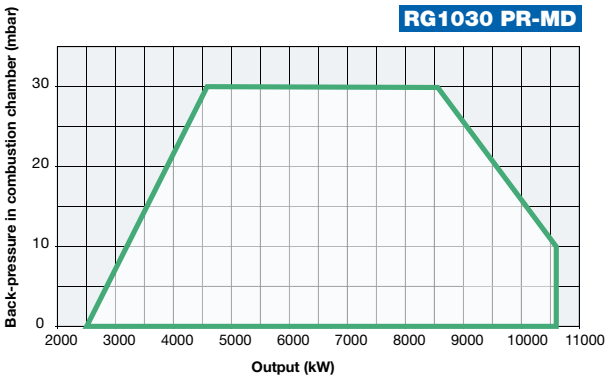

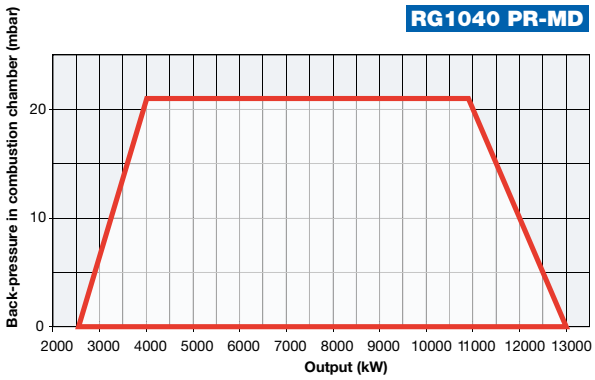

RG2050 RG2060 RG2080 duemila SERIES

This series of monoblock burners made of a solid die-cast aluminium housing, represents the outcome of our experience in the field of medium-large capacity burners. This version of burners owns a centrifugal air fan activated by a three phase motor, while the oil pump works through a dedicated motor.
The series DUEMILA with a capacity from 2.500kW to 19.000kW.
Both series are equipped with a by-passing nozzle that allows a modulating ratio of 1:3. The light oil output can be adjusted through a pressure regulator which effects on the return pipe line.
All burners have a control panel which includes the control box and the regulators of temperature and pressure. Furthermore they own a mimic diagram with lamps showing the sequential stages of the burner operation.

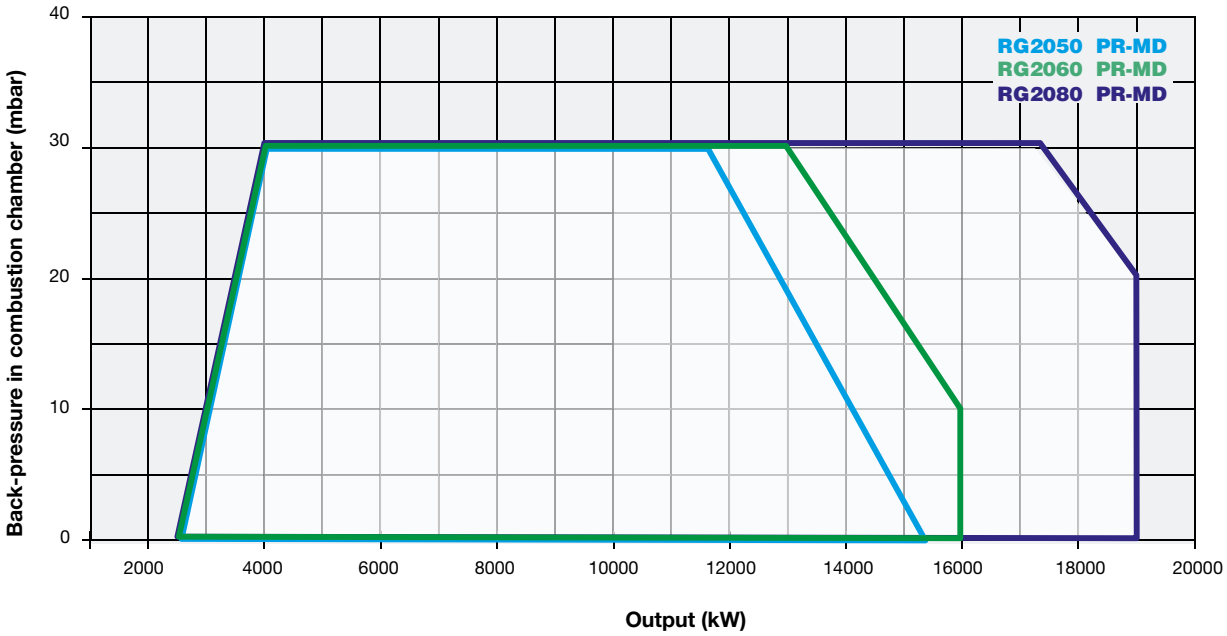

RG2050 RG2060 RG2080

TECHNICAL DETAILS

Type	Model	Power kW		Auxiliary electrical power supply	Motor electrical power supply	Fan motor	Pump motor	Noise level
		min.	max.			kW	kW	dBA
RG2050	G-.xx.x.xx.A	2.500	15.200	230 V 1N AC 50 Hz	400 V 3 AC 50 Hz	37	5,5	92,5
RG2060	G-.xx.x.xx.A	2.500	16.000	230 V 1N AC 50 Hz	400 V 3 AC 50 Hz	45	5,5	91,7
RG2080	G-.xx.x.xx.A	2.500	19.000	230 V 1N AC 50 Hz	400 V 3 AC 50 Hz	55	5,5	91,7

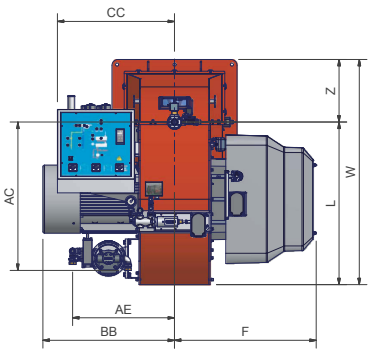

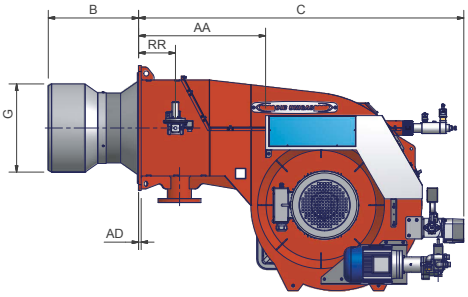

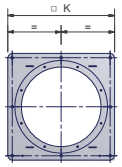

Burner flange

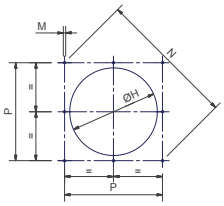

Suggested boiler drilling

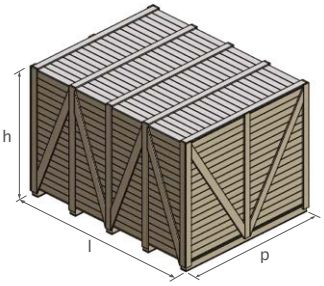

Type	Packaging dimensions (mm)			
	l	p	h	kg
RG2050	2396	1886	1969	1290
RG2060	2396	1886	1969	1370
RG2080	2396	1886	1969	1470

Approximate values

Type	Model	Overall dimensions (mm)																		
		AA	AC	AD	AE	B	BB	C	CC	F	G	H	K	L	M	N	P	RR	W	Z
RG2050	G-.xx.x.xx.A	741	866	15	595	*	768	1898	735	827	*	*	730	949	M16	948	670	215	1314	365
RG2060	G-.xx.x.xx.A	741	866	15	645	*	807	1890	735	846	*	*	850	949	M16	1117	790	215	1374	425
RG2080	G-.xx.x.xx.A	741	866	15	645	*	885	1890	735	846	*	*	850	949	M16	1117	790	215	1374	425

Approximate values
* The B, H, G dimensions must be confirmed from our DPT.

Monoblock burners 2000 series are supplied complete with a steel supporting frame: burner installation and manutention are greatly simplified.
The frame is equipped with wheels to easily move the burner, and its height is adjustable to match any type of boiler or furnace.

SUPPORTING FRAME FOR BURNERS 2050 SERIES

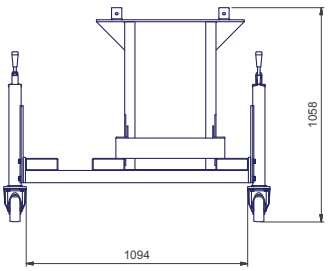

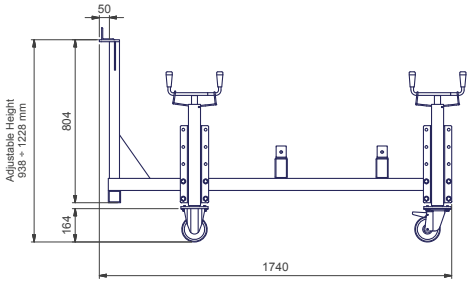

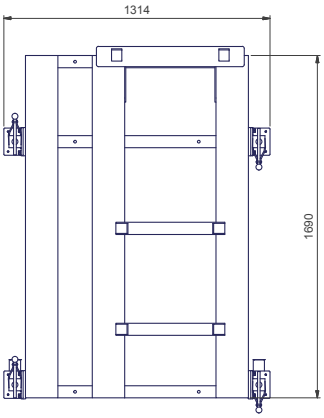

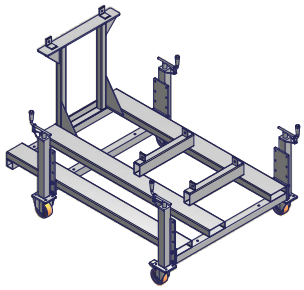

SUPPORTING FRAME FOR BURNERS 2060/2080 SERIES

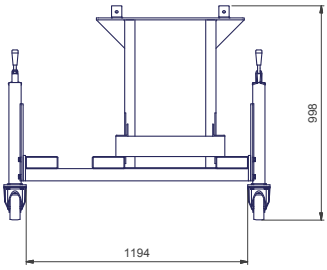

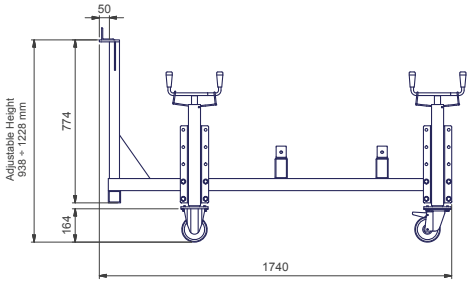

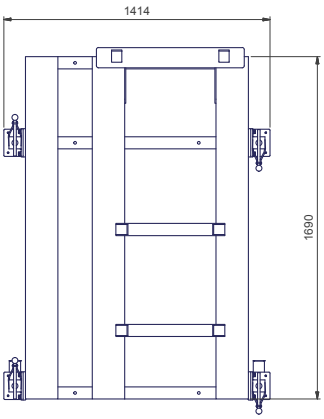

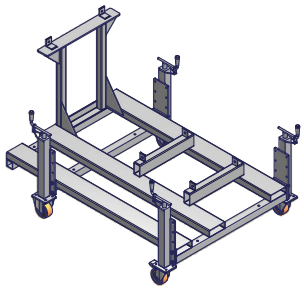

ELECTRONIC OPERATION

Model	Operation	RG2050 Code	RG2050 Price €	RG2060 Code	RG2060 Price €	RG2080 Code	RG2080 Price €
G-.PR.S.xx.A.EA	PR	03205015A		-	-	-	-
G-.MD.S.xx.A.EA	MD(*)	03205015E		-	-	-	-
G-.MD.S.xx.A.ES	MD(*)	03205015S		03205025S		03205035S	

(*) In order for the supply to be completed, the burner must be equipped with the respective modulating probe (see accessory table, page 290).

In compliance with:
Low Tension Directive 2014/35/UE
Electromagnetic Compatibility Directive 2014/30/UE
Machinery Directive 2006/42/CE

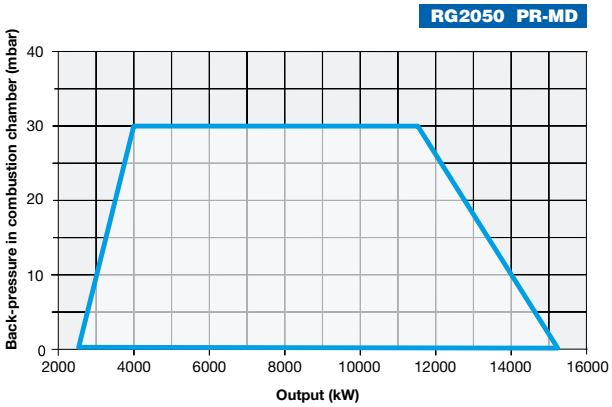

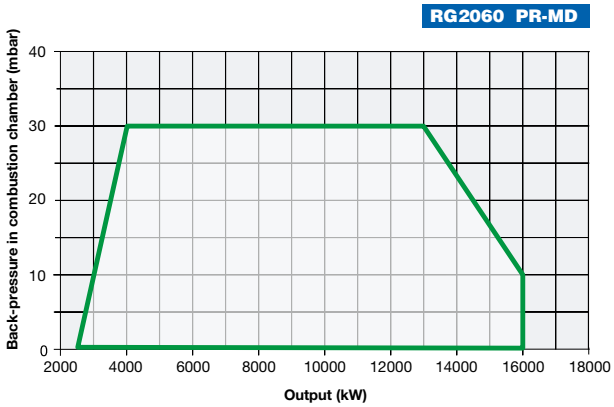

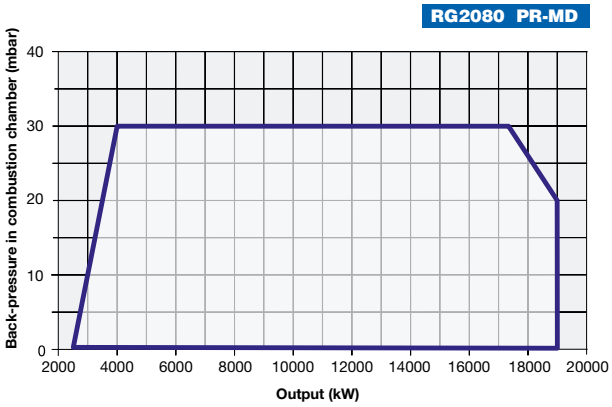

HEAVY OIL BURNERS

mechanical atomization
novanta series

PN91 - AB/PR/MD
PN92 - PR/MD
PN93 - PR/MD

mechanical atomization
cinquecento series

RN510 - PR/MD
RN515 - PR/MD
RN520 - PR/MD
RN525 - PR/MD

mechanical atomization
mille series

RN1030 - PR/MD
RN1040 - PR/MD

mechanical atomization
duemila series

RN2050 - PR/MD
RN2060 - PR/MD
RN2080 - PR/MD

Type pneumatic atomization

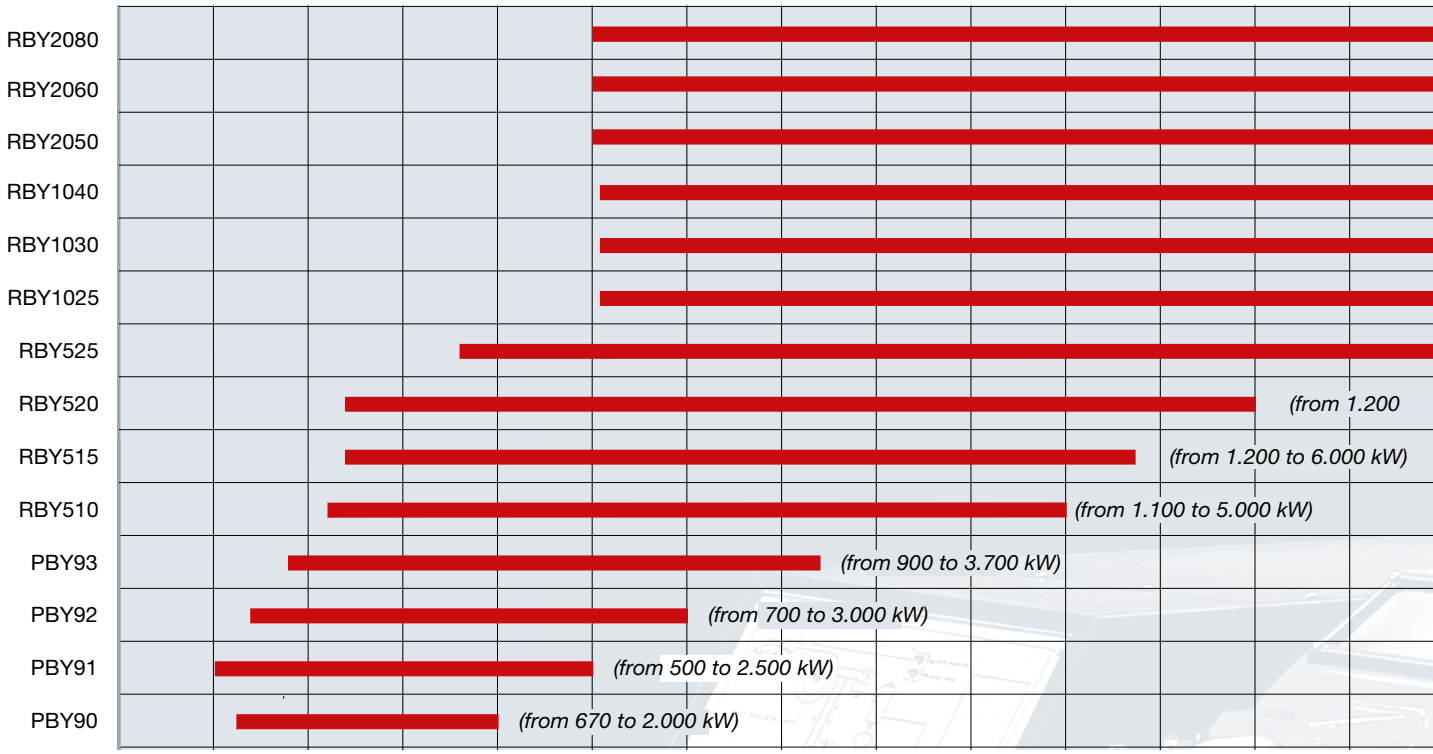

Type mechanical atomization

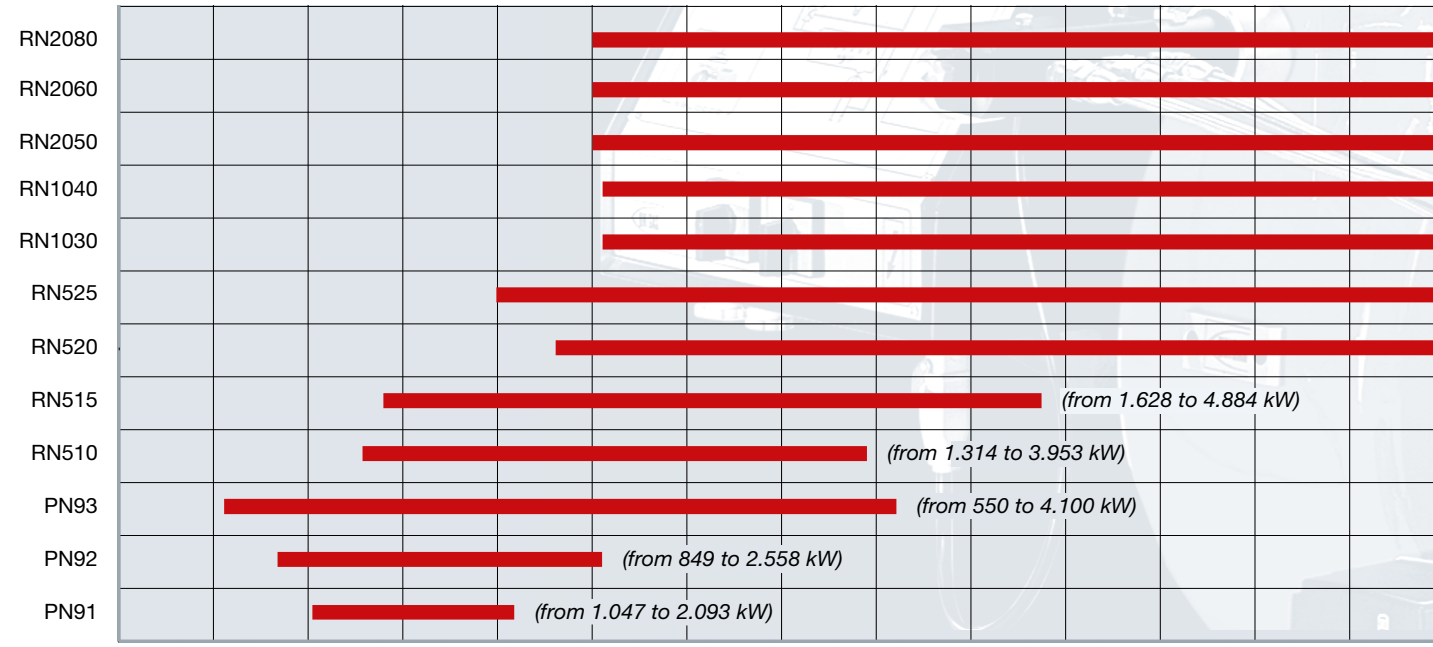

pneumatic atomization
novanta series

PBY90 - PR/MD
PBY91 - PR/MD
PBY92 - PR/MD
PBY93 - PR/MD

pneumatic atomization
cinquecento series

RBY510 - PR/MD
RBY515 - PR/MD
RBY520 - PR/MD
RBY525 - PR/MD

pneumatic atomization
mille series

RBY1025 - PR/MD
RBY1030 - PR/MD
RBY1040 - PR/MD

pneumatic atomization
duemila series

RBY2050 - PR/MD
RBY2060 - PR/MD
RBY2080 - PR/MD

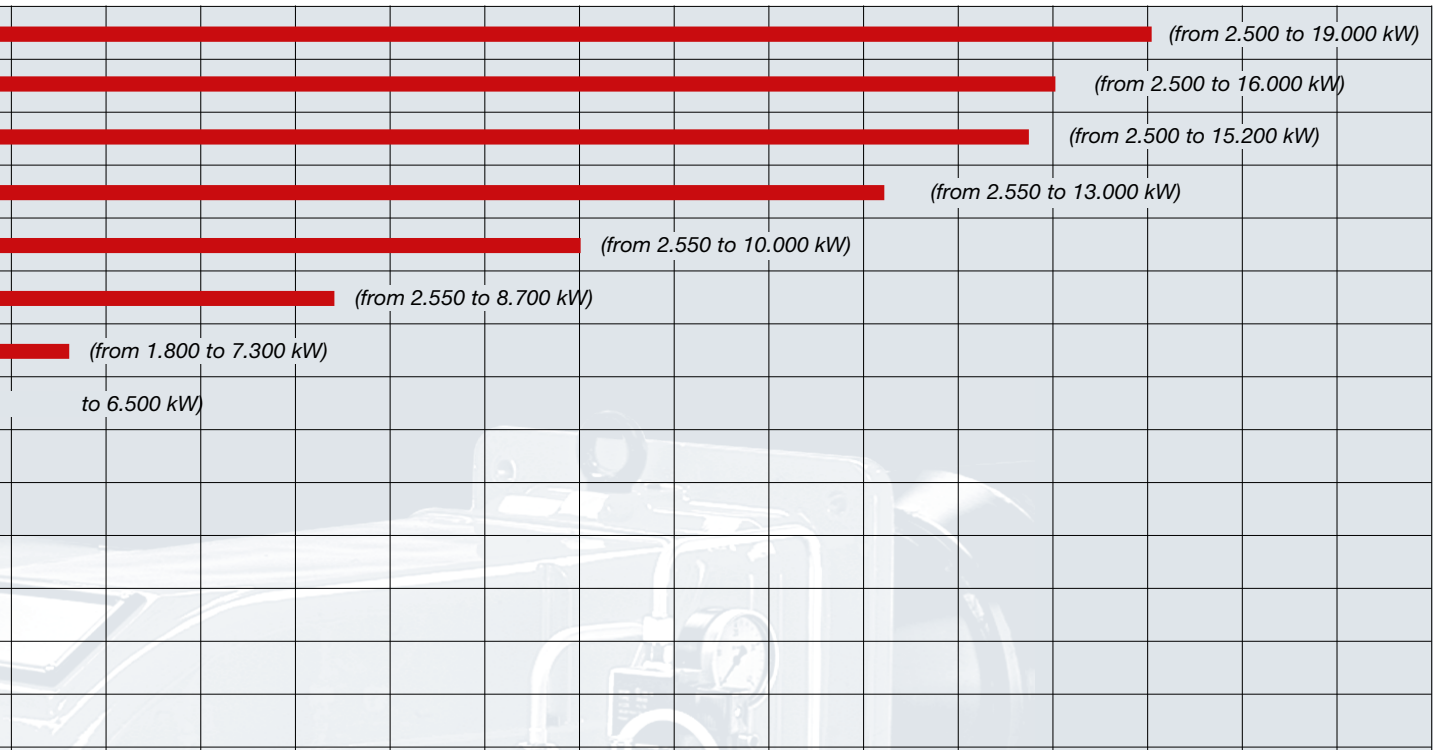

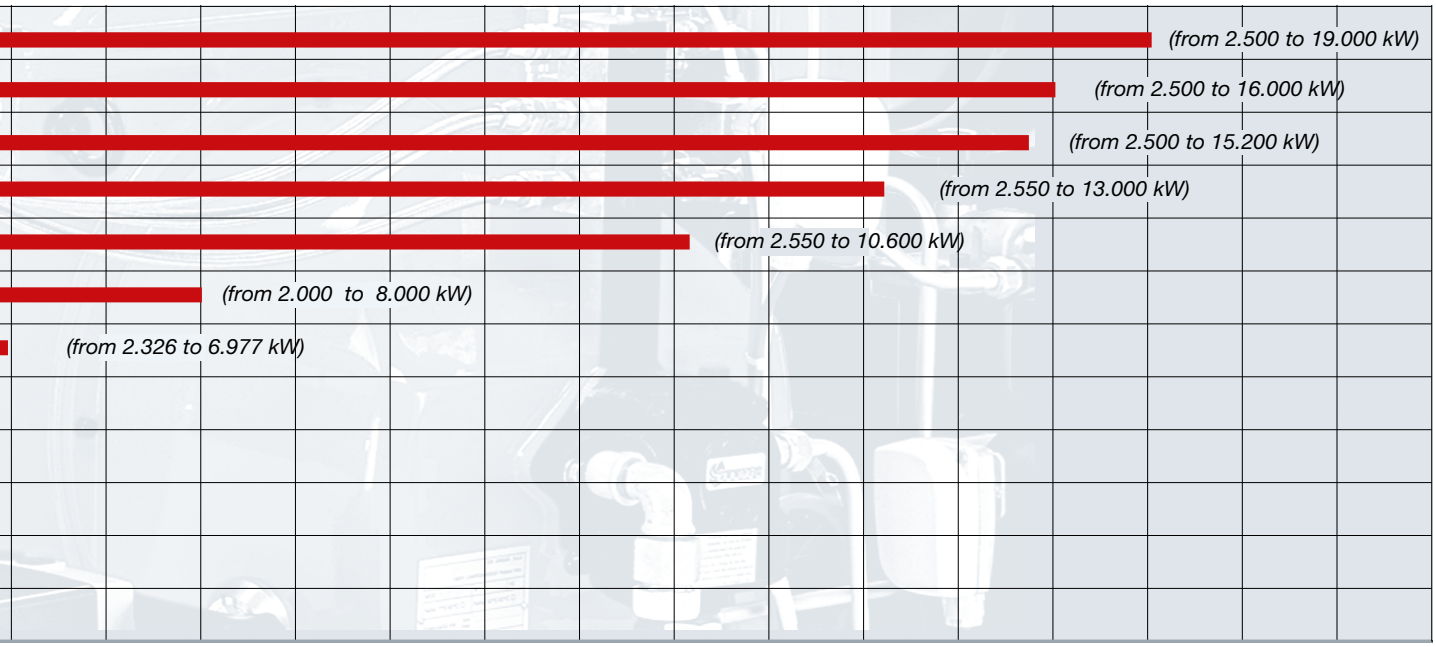

novanta SERIES PN91 PN92 PN93

MECHANICAL ATOMIZATION

These aluminium monoblock industrial burners with integral fan are available for oils with viscosity up to 110 cSt at 50°C (15°E at 50°C).
Upon request we can also supply a model for heavy oils up to 400 cSt at 50° C (50°E at 50°C).
Given the particular viscosity of the fuel and the necessity to keep the oil fluid, the burner uses a preheating system provided with a much lower thermal load electrical element in order to avoid carbon deposits.
The maintenance is always easy given that the components – for example the solenoid valve group - are mounted on a specific bracket which can be easily removed.

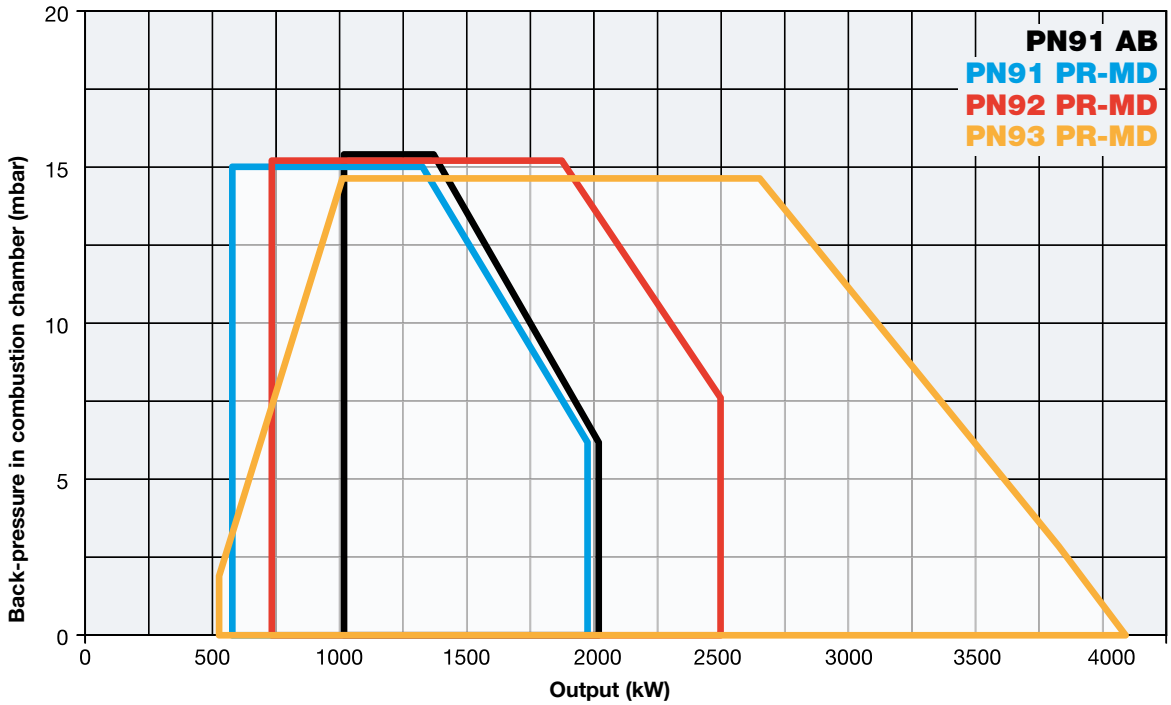

TECHNICAL DETAILS

Type	Model	Power kW		Auxiliary electrical power supply	Motor electrical power supply	Fan motor	Pump motor	Resistor
		min.	max.			kW	kW	kW
PN91	x-.AB.x.xx.A	1.047	2.093	230 V 1N AC 50 Hz	400 V 3 AC 50 Hz	4,0	-	12
PN91	x-.xx.x.xx.A	698	2.093	230 V 1N AC 50 Hz	400 V 3 AC 50 Hz	4,0	-	18
PN92	x-.xx.x.xx.A	849	2.558	230 V 1N AC 50 Hz	400 V 3 AC 50 Hz	5,5	-	18
PN93	x-.xx.x.xx.A	550	4.100	230 V 1N AC 50 Hz	400 V 3 AC 50 Hz	7,5	-	24

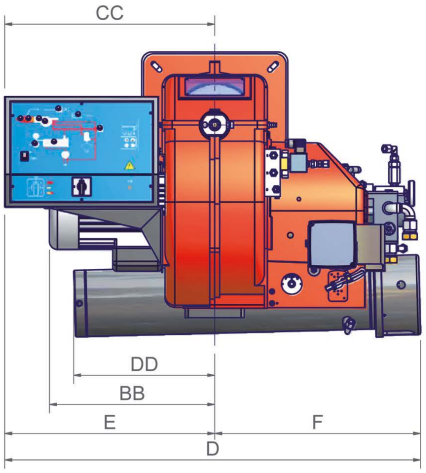

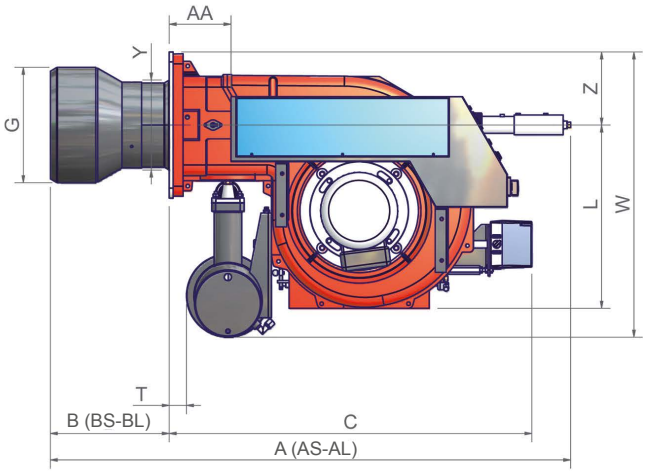

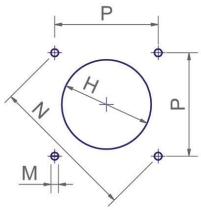

Suggested boiler drilling

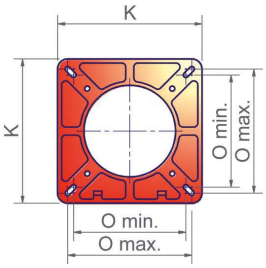

Burner flange

Type	Packaging dimensions (mm)			
	l	p	h	kg
PN91/92/93	1.730	1.280	1.020	290

Approximate values

Type	Model	Overall dimensions (mm)																								
		AA	AS	AL	BB	BS	BL	C	CC	D	DD	E	F	G	H	K	L	M	N	O		P	T	W	Y	Z
																				min.	max.					
PN91	x-.xx.x.xx.A	157	1315	1505	419	298	488	918	532	1119	356	532	589	262	292	360	464	M12	424	280	310	300	45	722	228	185
PN92	x-.xx.x.xx.A	157	1318	1508	419	301	491	918	532	1119	356	532	589	292	322	360	464	M12	424	280	310	300	45	722	228	185
PN93	x-.xx.x.xx.A	157	1318	1508	460	301	491	918	532	1119	356	532	589	292	322	360	464	M12	424	280	310	300	45	722	228	185

Approximate values

MECHANICAL OPERATION

Model	Operation	PN91 Code	PN91 Price €	PN92 Code	PN92 Price €	PN93 Code	PN93 Price €
HEAVY OIL 50 cSt at 50°C (7°E at 50°C)							
N-.AB.S.xx.A	AB	012060302		-		-	
N-.AB.L.xx.A	AB	012060402		-		-	
N-.PR.S.xx.A	PR	012060303		012060503		012061403	
N-.PR.L.xx.A	PR	012060403		012060603		012061503	
N-.MD.S.xx.A	MD(*)	012060304		012060504		012061404	
N-.MD.L.xx.A	MD(*)	012060404		012060604		012061504	
HEAVY OIL 110 cSt at 50°C (15°E at 50°C)							
E-.AB.S.xx.A	AB	012150302		-		-	
E-.AB.L.xx.A	AB	012150402		-		-	
E-.PR.S.xx.A	PR	012150303		012150503		012151403	
E-.PR.L.xx.A	PR	012150403		012150603		012151503	
E-.MD.S.xx.A	MD(*)	012150304		012150504		012151404	
E-.MD.L.xx.A	MD(*)	012150404		012150604		012151504	
HEAVY OIL 400 cSt at 50°C (50°E at 50°C)							
D-.AB.S.xx.A	AB	012180302		-		-	
D-.AB.L.xx.A	AB	012180402		-		-	
D-.PR.S.xx.A	PR	012180303		012180503		012181403	
D-.PR.L.xx.A	PR	01280403		012180603		012181503	
D-.MD.S.xx.A	MD(*)	012180304		012180504		012181404	
D-.MD.L.xx.A	MD(*)	012180404		012180604		012181504	

(*) In order for the supply to be completed, the burner must be equipped with the respective modulating probe (see accessory table, page 290).
In compliance with:
Low Tension Directive 2014/35/UE
Electromagnetic Compatibility Directive 2014/30/UE
Machinery Directive 2006/42/CE

ELECTRONIC OPERATION

Model	Operation	PN91 Code	PN91 Price €	PN92 Code	PN92 Price €	PN93 Code	PN93 Price €
HEAVY OIL 50 cSt at 50°C (7°E at 50°C)							
N-.MD.S.xx.A.ES	MD(*)	01206030S		01206050S		01206040S	
N-.MD.L.xx.A.ES	MD(*)	01206140S		01206060S		01206150S	
HEAVY OIL 110 cSt at 50°C (15°E at 50°C)							
E-.MD.S.xx.A.ES	MD(*)	01215030S		01215050S		01215140S	
E-.MD.L.xx.A.ES	MD(*)	01215040S		01215060S		01215150S	
HEAVY OIL 400 cSt at 50°C (50°E at 50°C)							
D-.MD.S.xx.A.ES	MD(*)	01218030S		01218050S		01218140S	
D-.MD.L.xx.A.ES	MD(*)	01218040S		01218060S		01218150S	

(*) In order for the supply to be completed, the burner must be equipped with the respective modulating probe (see accessory table, page 290).
In compliance with:
Low Tension Directive 2014/35/UE
Electromagnetic Compatibility Directive 2014/30/UE
Machinery Directive 2006/42/CE

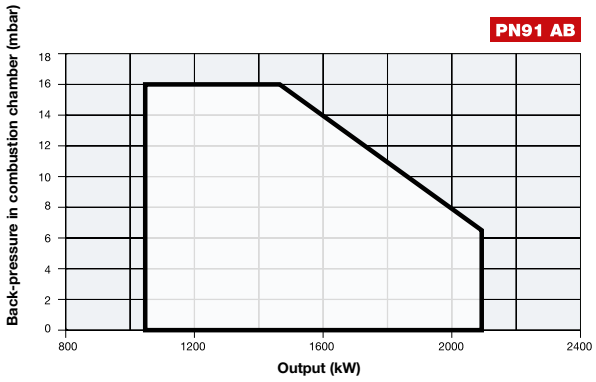

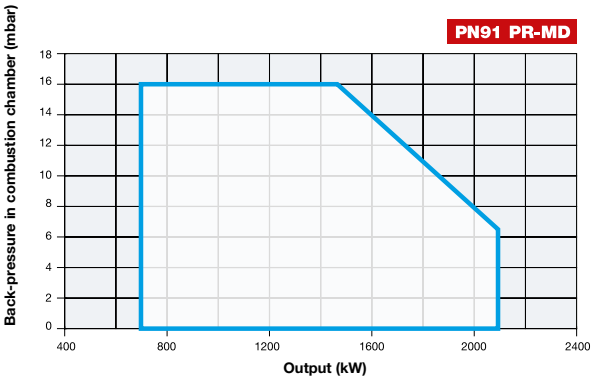

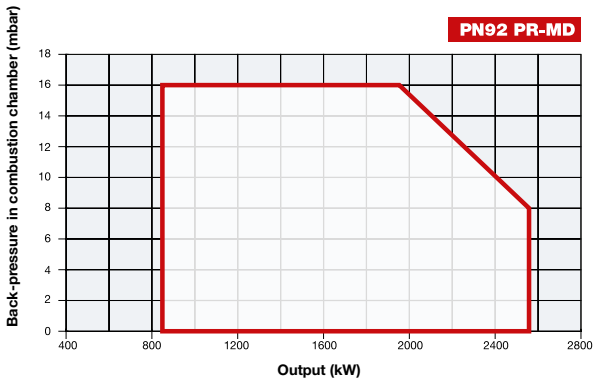

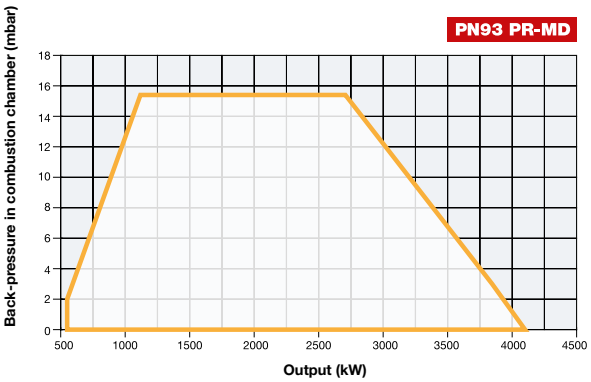

cinquecento SERIES RN510 RN515 RN520 RN525

MECHANICAL ATOMIZATION

These aluminium monoblock industrial burners with integral fan are available for oils with viscosity up to 110 cSt at 50°C (15°E at 50°C).
Upon request we can also supply a model for heavy oils up to 400 cSt at 50° C (50°E at 50°C).
Given the particular viscosity of the fuel and the necessity to keep the oil fluid, the burner uses a preheating system provided with a much lower thermal load electrical element in order to avoid carbon deposits.
The maintenance is always easy given that the components – for example the solenoid valve group - are mounted on a specific bracket which can be easily removed.

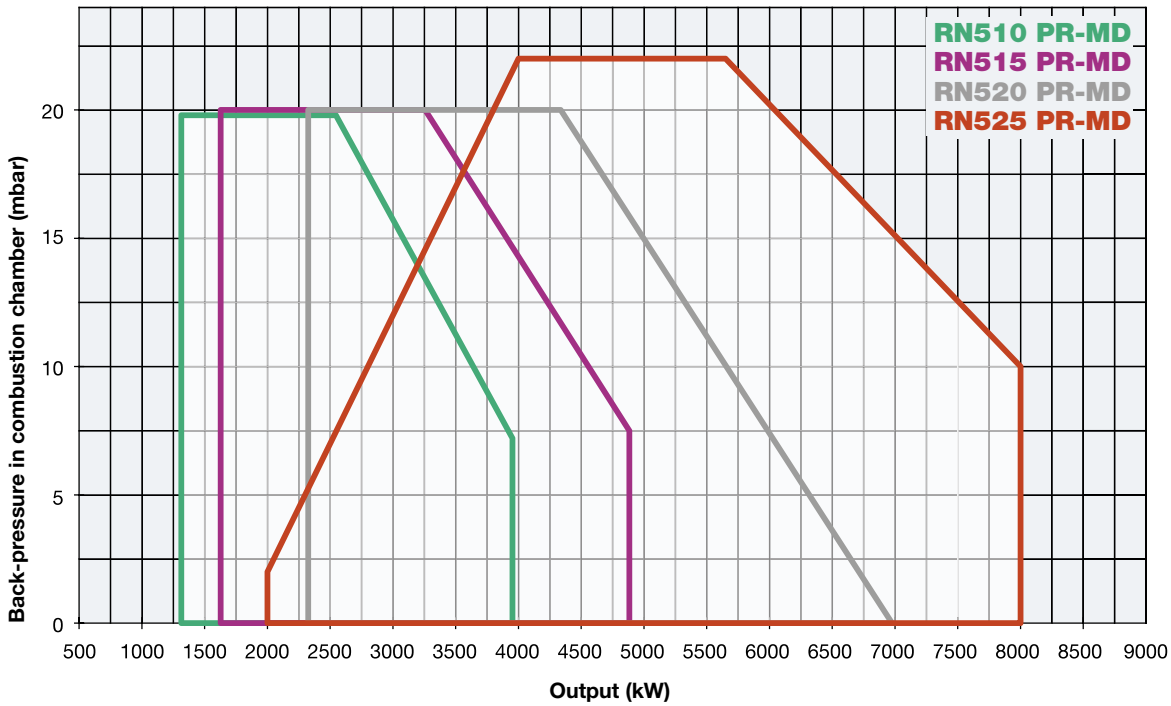

RN510 RN515 RN520 RN525 cinquecento SERIES

TECHNICAL DETAILS

Type	Model	Power kW		Auxiliary electrical power supply	Motor electrical power supply	Fan motor	Pump motor	Resistor	Noise level
		min.	max.			kW	kW	kW	dBA
RN510	x-.xx.x.xx.A	1.314	3.953	230 V 1N AC 50 Hz	400 V 3 AC 50 Hz	7,5	1,1	24	81,7
RN515	x-.xx.x.xx.A	1.628	4.884	230 V 1N AC 50 Hz	400 V 3 AC 50 Hz	11,0	1,5	12 + 18	82,3
RN520	x-.xx.x.xx.A	2.326	6.977	230 V 1N AC 50 Hz	400 V 3 AC 50 Hz	15,0	2,2	18 + 24	83,2
RN525	x-.xx.x.xx.A	2.000	8.000	230 V 1N AC 50 Hz	400 V 3 AC 50 Hz	18,5	2,2	24 + 24	84,9

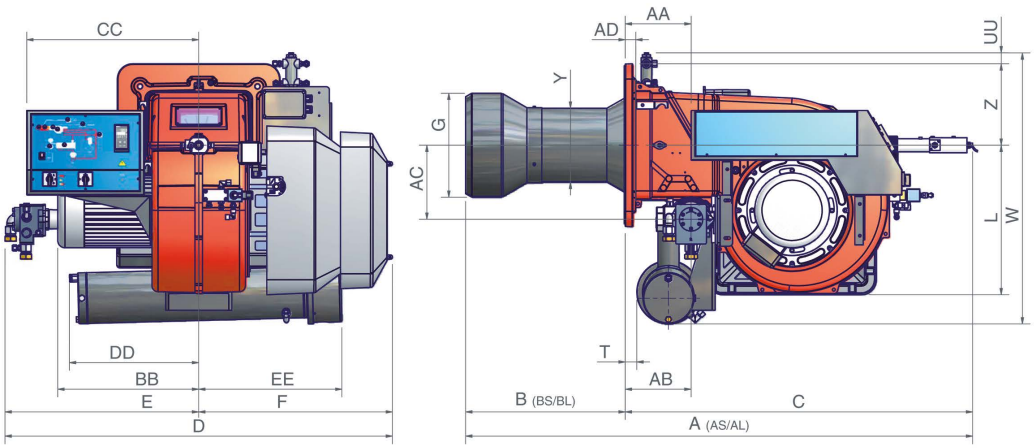

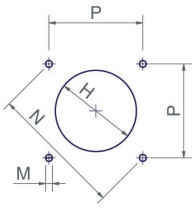

Suggested boiler drilling

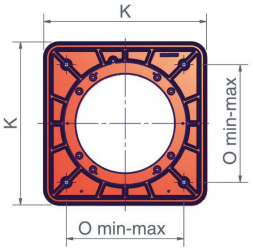

Burner flange

Type	Packaging dimensions (mm)			
	l	p	h	kg
RN510	1.720	1.500	1.150	410
RN515	1.720	1.500	1.150	410
RN520	1.720	1.500	1.150	410
RN525	1.800	1.500	1.300	430

Approximate values

Type	Model	Overall dimensions** (mm)																											
		AA	AS	AL	AB	AC	AD	BB	BS	BL	C	CC	D	DD	E	EE	F	G	H	K	L	M	N	O	P	T	UU	W	Y	Z
RN510	x-.xx.x.xx.A	221	1502	1682	217	246	35	468	350	530	1152	571	1286	349	643	556	643	345	385	540	496	M14	552	390	390	37	36	897	328	270
RN515	x-.xx.x.xx.A	145	1502	1682	217	246	35	508	350	530	1152	598	1286	-	643	-	643	384	424	540	496	M14	552	390	390	37	36	802	328	270
RN520	x-.xx.x.xx.A	145	1502	1682	207	250	35	508	350	530	1152	598	1286	-	643	-	643	422	472	540	496	M14	552	390	390	37	36	802	328	270
RN525	x-.xx.x.xx.A	145	1502	1682	197	275	35	650	350	530	1152	598	1286	-	643	-	643	434	484	540	496	M14	552	390	390	37	78	844	328	270

Approximate values

RN510 RN515 RN520 RN525

MECHANICAL OPERATION

		RN510		RN515		RN520		RN525	
Model	Operation	Code	Price €	Code	Price €	Code	Price €	Code	Price €
HEAVY OIL 50 cSt at 50°C (7°E at 50°C)									
N-.PR.S.xx.A	PR	029060103		029060303		029060503		029060703	
N-.PR.L.xx.A	PR	029060203		029060403		029060603		029060803	
N-.MD.S.xx.A	MD(*)	029060104		029060304		029060504		029060704	
N-.MD.L.xx.A	MD(*)	029060204		029060404		029060604		029060804	
HEAVY OIL 110 cSt at 50°C (15°E at 50°C)									
E-.PR.S.xx.A	PR	029150103		029150303		029150503		029150703	
E-.PR.L.xx.A	PR	029150203		029150403		029150603		029150803	
E-.MD.S.xx.A	MD(*)	029150104		029150304		029150504		029150704	
E-.MD.L.xx.A	MD(*)	029150204		029150404		029150604		029150804	
HEAVY OIL 400 cSt at 50°C (50°E at 50°C)									
D-.PR.S.xx.A	PR	029180103		029180303		029180503		029180703	
D-.PR.L.xx.A	PR	029180203		029180403		029180603		029180803	
D-.MD.S.xx.A	MD(*)	0299180104		029180304		029180504		029180704	
D-.MD.L.xx.A	MD(*)	029180204		029180404		029180604		029180804	

(*) In order for the supply to be completed, the burner must be equipped with the respective modulating probe (see accessory table, page 290).
In compliance with:
Low Tension Directive 2014/35/UE
Electromagnetic Compatibility Directive 2014/30/UE
Machinery Directive 2006/42/CE

ELECTRONIC OPERATION

		RN510		RN515		RN520		RN525	
Model	Operation	Code	Price €	Code	Price €	Code	Price €	Code	Price €
HEAVY OIL 50 cSt at 50°C (7°E at 50°C)									
N-.MD.S.xx.A.ES	MD(*)	02906010S		02906030S		02906050S		02906070S	
N-.MD.L.xx.A.ES	MD(*)	02906020S		02906040S		02906050S		02906080S	
HEAVY OIL 110 cSt at 50°C (15°E at 50°C)									
E-.MD.S.xx.A.ES	MD(*)	02915010S		02915030S		02915050S		02915070S	
E-.MD.L.xx.A.ES	MD(*)	02915020S		02915040S		02915060S		02915080S	
HEAVY OIL 400 cSt at 50°C (50°E at 50°C)									
D-.MD.S.xx.A.ES	MD(*)	02918010S		02918030S		02918050S		02918070S	
D-.MD.L.xx.A.ES	MD(*)	02918020S		02918040S		02918060S		02918080S	

(*) In order for the supply to be completed, the burner must be equipped with the respective modulating probe (see accessory table, page 290).
In compliance with:
Low Tension Directive 2014/35/UE
Electromagnetic Compatibility Directive 2014/30/UE
Machinery Directive 2006/42/CE

RN510 RN515 RN520 RN525 cinquecento SERIES

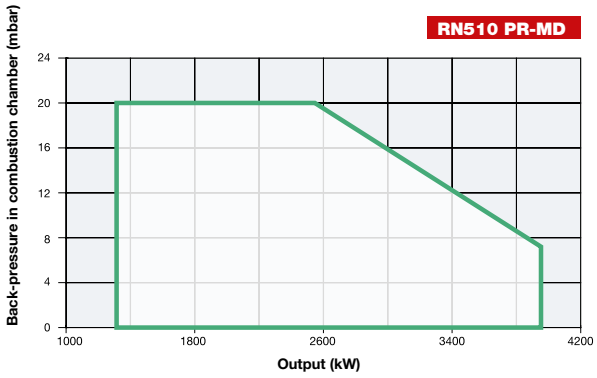

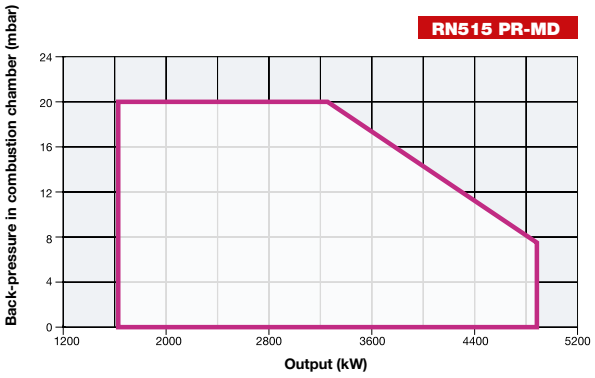

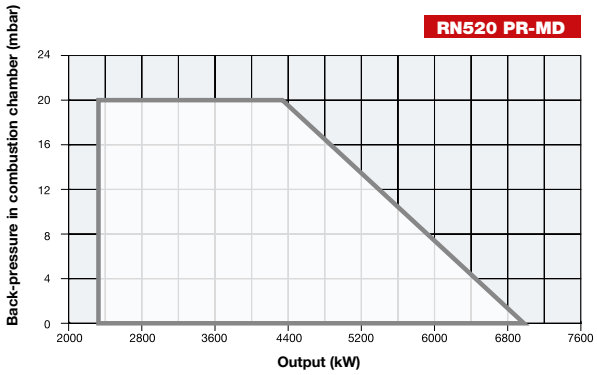

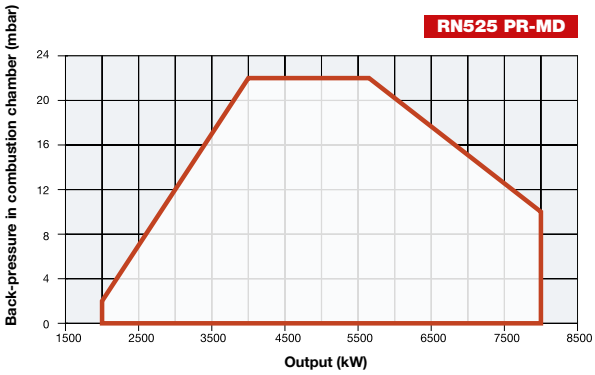

mille SERIES RN1030 RN1040

MECHANICAL ATOMIZATION

These aluminium monoblock industrial burners with integral fan, are available for oils with viscosity up to 110 cSt at 50°C (15°E at 50°C).
Upon request we can also supply a model for heavy oils up to 400 cSt at 50° C (50°E at 50°C).
These burners use a mechanical atomization system and, given the particular viscosity of the fuel, they are equipped with two preheating tanks provided with electronic elements to keep the oil fluid and to avoid carbon deposits.
These burners are ignited through a pilot which can work either with natural gas or LPG.
The burners' main features are the relationship between the combustion head and the blast tube, and the specific fan guide that allows maximum exploitation of the fan performance.
Like all other UNIGAS burners these ones are highly reliable and fully compliant thanks to the constant tests carried out by our laboratory.

Electronic set up (optional)

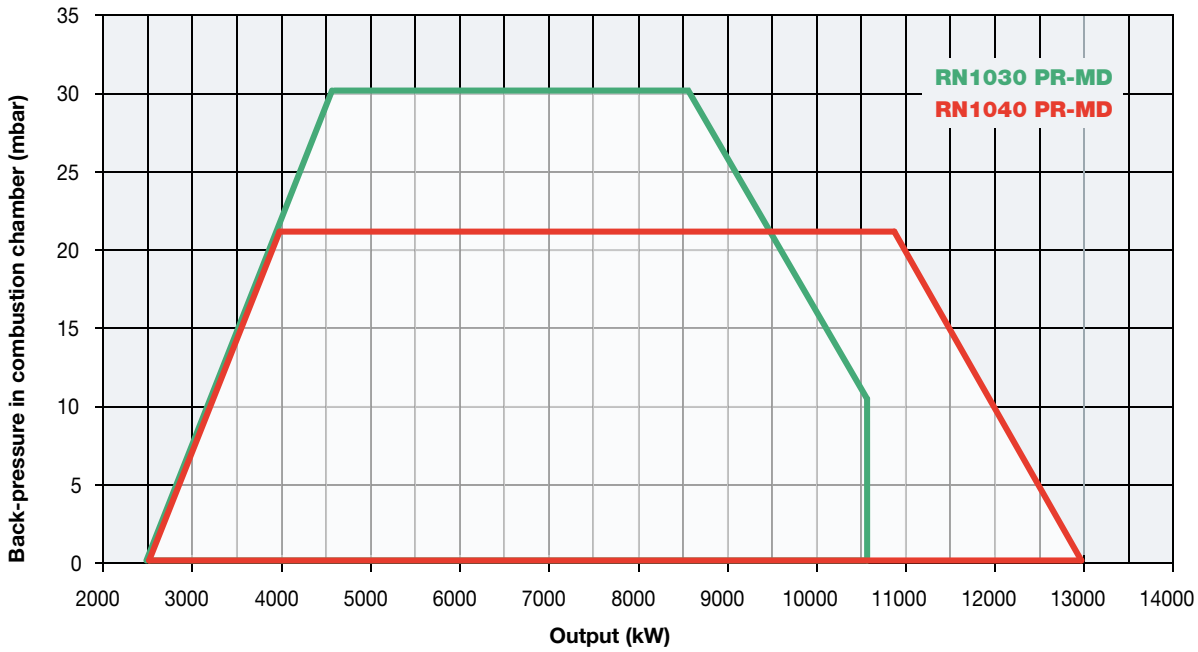

TECHNICAL DETAILS

Type	Model	Power kW		Auxiliary electrical power supply	Motor electrical power supply	Fan motor	Pump motor	Resistor	Noise level
		min.	max.			kW	kW	kW	dBA
RN1030	x-.xx.x.xx.A	2.550	10.600	230 V 1N AC 50 Hz	400 V 3 AC 50 Hz	22	5,5	24+24	85,6
RN1040	x-.xx.x.xx.A	2.550	13.000	230 V 1N AC 50 Hz	400 V 3 AC 50 Hz	30	5,5	24+24	85,6

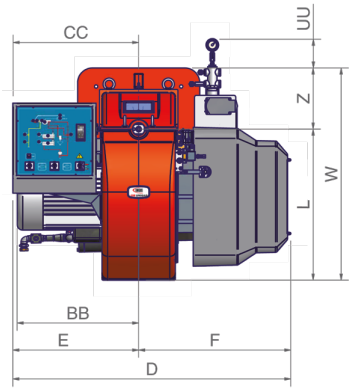

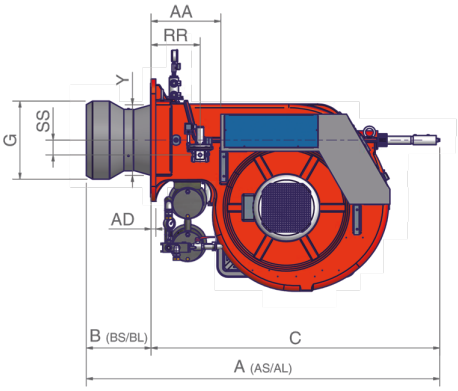

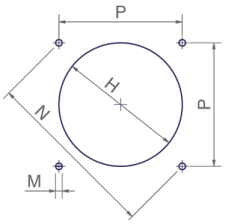

Suggested boiler drilling

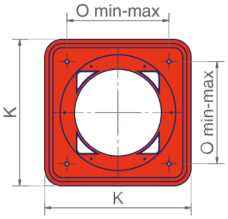

Burner flange

Type	Packaging dimensions (mm)			
	l	p	h	kg
RN1030/1040	2.270	1.720	1.320	800

Approximate values

Type	Model	Overall dimensions (mm)																								
		AA	AS	AL	AD	BB	BS	BL	C	CC	D	E	F	G	H	K	L	M	N	O	P	RR	SS	UU	W	Y	Z
RN1030	x-.xx.x.xx.A	377	1888	2082	25	657	420	614	1468	680	1502	680	822	526	576	660	816	M16	651	460	460	265	80	142	1146	381	330
RN1040	x-.xx.x.xx.A	377	1959	2153	25	657	384	578	1575	680	1502	680	822	671	731•	660	816	M16	651	460	460	265	80	142	1146	412	330

Approximate values

• Install a counter-flange between the burner and the boiler or in alternative, drill the H hole smaller but higher than the Y point and assemble the blast tube inside the boiler.

MECHANICAL OPERATION

Model	Operation	RN1030 Code	RN1030 Price €	RN1040 Code	RN1040 Price €
HEAVY OIL 50 cSt at 50°C (7°E at 50°C)					
N-.PR.S.xx.A	PR	023061603		023061803	
N-.PR.L.xx.A	PR	023061703		023061903	
N-.MD.S.xx.A	MD(*)	023061604		023061804	
N-.MD.L.xx.A	MD(*)	023061704		023061904	
HEAVY OIL 110 cSt at 50°C (15°E at 50°C)					
E-.PR.S.xx.A	PR	023151603		023151803	
E-.PR.L.xx.A	PR	023151703		023151903	
E-.MD.S.xx.A	MD(*)	023151604		023151804	
E-.MD.L.xx.A	MD(*)	023151704		023151904	
HEAVY OIL 400 cSt at 50°C (50°E at 50°C)					
D-.PR.S.xx.A	PR	023181603		023181803	
D-.PR.L.xx.A	PR	023181703		023181903	
D-.MD.S.xx.A	MD(*)	023181604		023181804	
D-.MD.L.xx.A	MD(*)	023181704		023181904	

(*) In order for the supply to be completed, the burner must be equipped with the respective modulating probe (see accessory table, page 290).
In compliance with:
Low Tension Directive 2014/35/UE - Electromagnetic Compatibility Directive 2014/30/UE - Machinery Directive 2006/42/CE

ELECTRONIC OPERATION

Model	Operation	RN1030 Code	RN1030 Price €	RN1040 Code	RN1040 Price €
HEAVY OIL 50 cSt at 50°C (7°E at 50°C)					
N-.PR.S.xx.A.EA	PR	02306160A		02306180A	
N-.PR.L.xx.A.EA	PR	02306170A		02306190A	
N-.MD.S.xx.A.EA	MD(*)	02306160E		02306180E	
N-.MD.L.xx.A.EA	MD(*)	02306170E		02306190E	
HEAVY OIL 110 cSt at 50°C (15°E at 50°C)					
E-.PR.S.xx.A.EA	PR	02315160A		02315180A	
E-.PR.L.xx.A.EA	PR	02315170A		02315190A	
E-.MD.S.xx.A.EA	MD(*)	02315160E		02315180E	
E-.MD.L.xx.A.EA	MD(*)	02315170E		02315190E	
HEAVY OIL 400 cSt at 50°C (50°E at 50°C)					
D-.PR.S.xx.A.EA	PR	02318160A		02318180A	
D-.PR.L.xx.A.EA	PR	02318170A		02318190A	
D-.MD.S.xx.A.EA	MD(*)	02318160E		02318180E	
D-.MD.L.xx.A.EA	MD(*)	02318170E		02318190E	

(*) In order for the supply to be completed, the burner must be equipped with the respective modulating probe (see accessory table, page 290).
In compliance with:
Low Tension Directive 2014/35/UE - Electromagnetic Compatibility Directive 2014/30/UE - Machinery Directive 2006/42/CE

ELECTRONIC OPERATION

Model	Operation	RN1030 Code	RN1030 Price €	RN1040 Code	RN1040 Price €
HEAVY OIL 50 cSt at 50°C (7°E at 50°C)					
N-.MD.S.xx.A.ES	MD(*)	02306160S		02306180S	
N-.MD.L.xx.A.ES	MD(*)	02306170S		02306190S	
HEAVY OIL 110 cSt at 50°C (15°E at 50°C)					
E-.MD.S.xx.A.ES	MD(*)	02315160S		02315180S	
E-.MD.L.xx.A.ES	MD(*)	02315170S		02315190S	
HEAVY OIL 400 cSt at 50°C (50°E at 50°C)					
D-.MD.S.xx.A.ES	MD(*)	02318160S		02318180S	
D-.MD.L.xx.A.ES	MD(*)	02318170S		02318190S	

(*) In order for the supply to be completed, the burner must be equipped with the respective modulating probe (see accessory table, page 290).
In compliance with:
Low Tension Directive 2014/35/UE
Electromagnetic Compatibility Directive 2014/30/UE
Machinery Directive 2006/42/CE

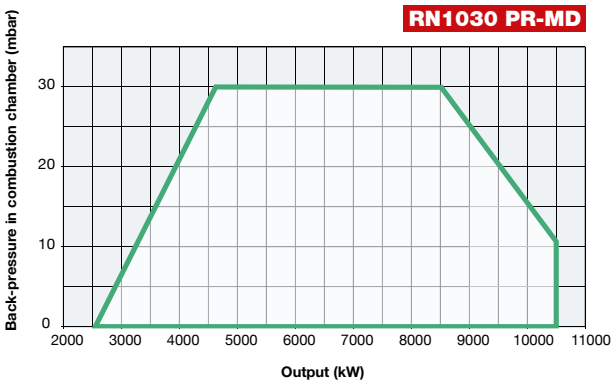

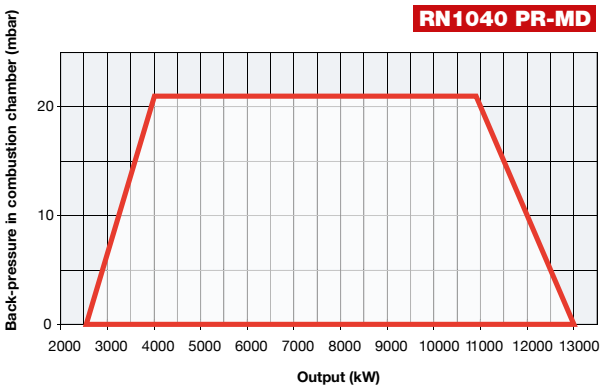

duemila SERIES RN2050 RN2060 RN2080

MECHANICAL ATOMIZATION

These aluminium monoblock industrial burners with integral fan are available for oils with viscosity up to 110 cSt at 50°C (15°E at 50°C).
Upon request we can also supply a model for heavy oils up to 400 cSt at 50° C (50°E at 50°C).
Given the particular viscosity of the fuel and the necessity to keep the oil fluid, the burner uses a preheating system provided with a much lower thermal load electrical element in order to avoid carbon deposits.
The maintenance is always easy given that the components – for example the solenoid valve group - are mounted on a specific bracket which can be easily removed.

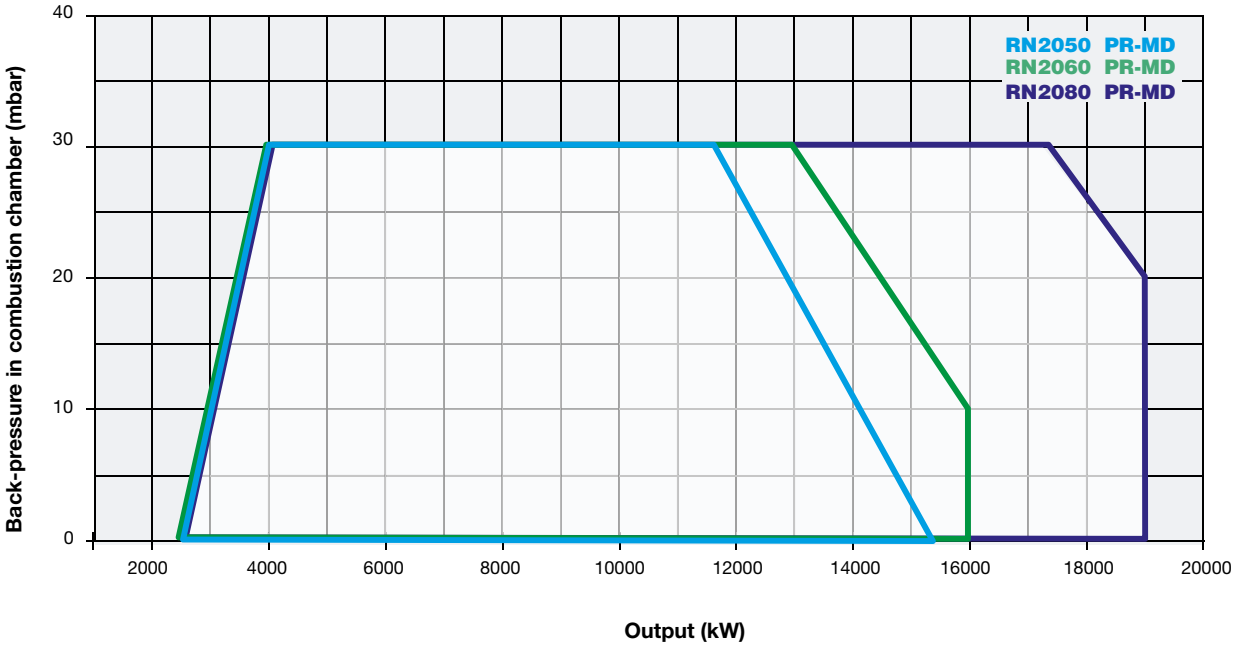

RN2050 RN2060 RN2080 duemila SERIES

TECHNICAL DETAILS

Type	Model	Power kW		Auxiliary electrical power supply	Motor electrical power supply	Fan motor	Pump motor	Resistor	Noise level
		min.	max.			kW	kW	kW	dBA
RN2050	x-.xx.S.xx.A	2.500	15.200	230 V 1N AC 50 Hz	400 V 3 AC 50 Hz	37	5,5	24 + 24	92,5
RN2060	x-.xx.S.xx.A	2.500	16.000	230 V 1N AC 50 Hz	400 V 3 AC 50 Hz	45	5,5	24 + 24	91,7
RN2080	x-.xx.S.xx.A	2.500	19.000	230 V 1N AC 50 Hz	400 V 3 AC 50 Hz	55	5,5	24 + 24	91,7

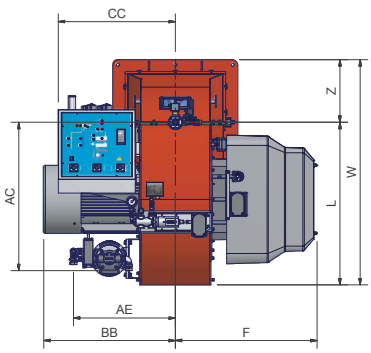

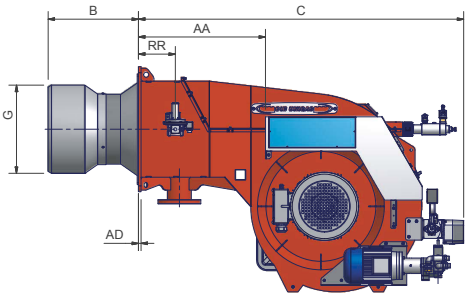

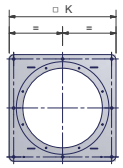

Burner flange

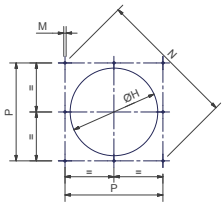

Suggested boiler drilling

Low pressure pump set (pump, motor and filter) is included, but supplied loose (not assembled on the burner).

Boiler drilling drill must be confirmed according the firing head

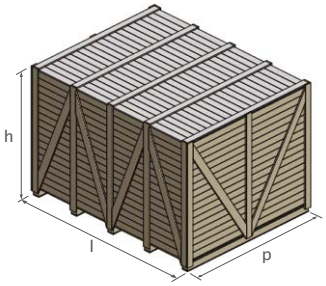

Type	Packaging dimensions (mm)			
	l	p	h	kg
RN2050	2.396	1.886	1.969	1.390
RN2060	2.396	1.886	1.969	1.410
RN2080	2.396	1.886	1.969	1.510

Approximate values

Type	Model	Overall dimensions (mm)																		
		AA	AC	AD	AE	B	BB	C	CC	F	G	H	K	L	M	N	P	RR	W	Z
RN2050	x-.xx.S.xx.A.xx	741	866	15	595	*	768	1898	735	827	*	*	730	949	M16	948	670	215	1314	365
RN2060	x-.xx.S.xx.A.xx	741	866	15	645	*	807	1890	735	846	*	*	850	949	M16	1117	790	215	1374	425
RN2080	x-.xx.S.xx.A.xx	741	866	15	645	*	885	1890	735	846	*	*	850	949	M16	1117	790	215	1374	425

Approximate values
* The B, H, G dimensions must be confirmed from our DPT.

Monoblock burners 2000 series are supplied complete with a steel supporting frame: burner installation and manutention are greatly simplified.
The frame is equipped with wheels to easily move the burner, and its height is adjustable to match any type of boiler or furnace.

SUPPORTING FRAME FOR BURNERS 2050 SERIES

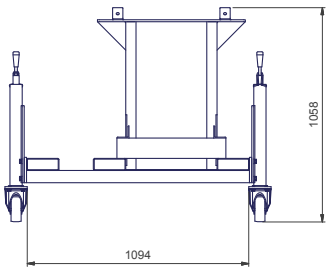

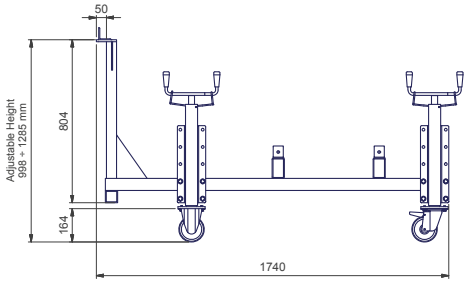

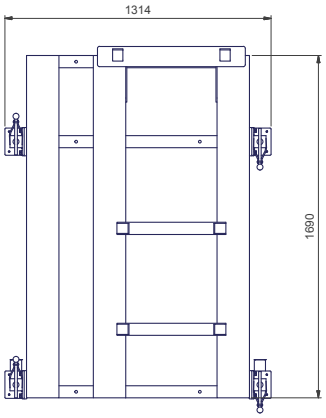

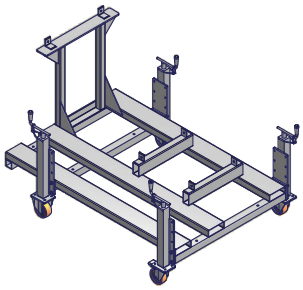

SUPPORTING FRAME FOR BURNERS 2060/2080 SERIES

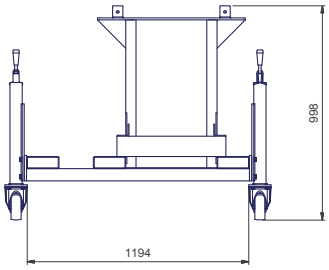

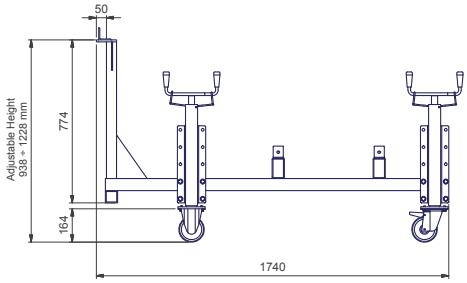

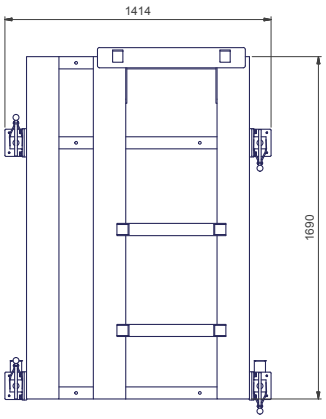

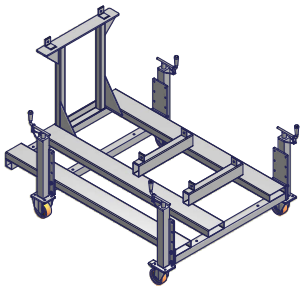

ELECTRONIC OPERATION

			RN2050		RN2060		RN2080	
Model	Rampa gas	Operation	Code	Price €	Code	Price €	Code	Price €
HEAVY OIL 400 cSt at 50°C (50°E at 50°C)								
D-.PR.S.xx.A.EA		PR	03218015A		-	-	-	-
D-.MD.S.xx.A.EA		MD(*)	03218015E		-	-	-	-
D-.MD.S.xx.A.ES		MD(*)	03218015S		03218025S		03218035S	

(*) In order for the supply to be completed, the burner must be equipped with the respective modulating probe (see accessory table, page 290).

In compliance with:
Low Tension Directive 2014/35/UE
Electromagnetic Compatibility Directive 2014/30/UE
Machinery Directive 2006/42/CE

RN2050 RN2060 RN2080

MECHANICAL ATOMIZATION

RN2050 PR-MD

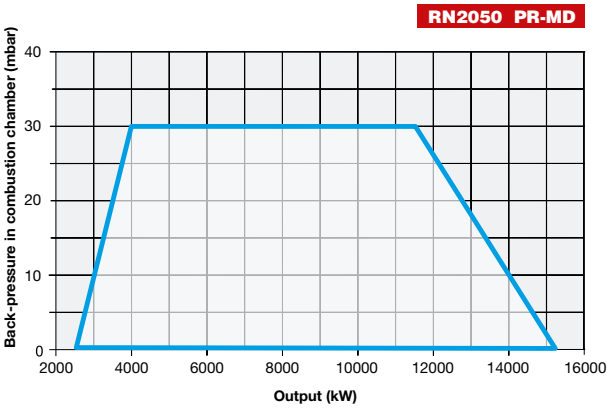

RN2060 PR-MD

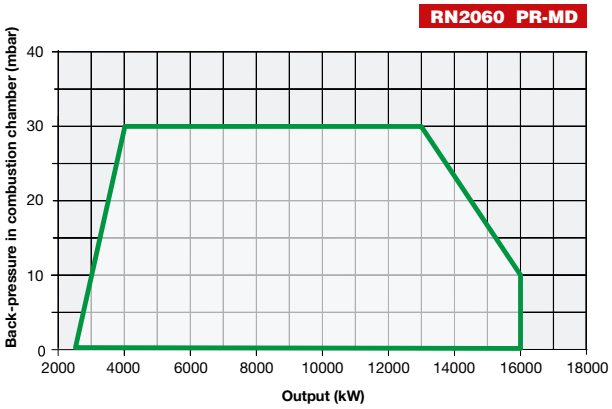

RN2080 PR-MD

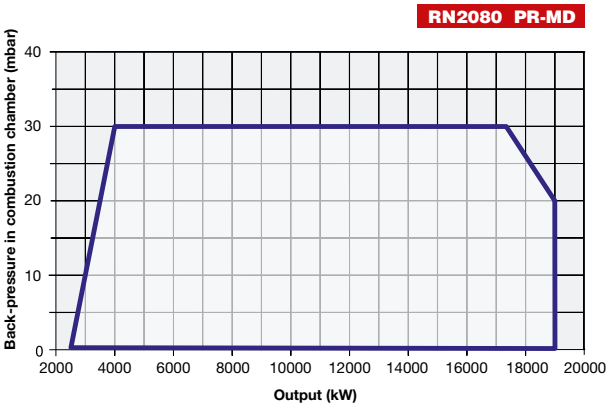

PBY90 PBY91 PBY92 PBY93 novanta SERIES

PNEUMATIC ATOMIZATION WITH ELECTRONIC OPERATION

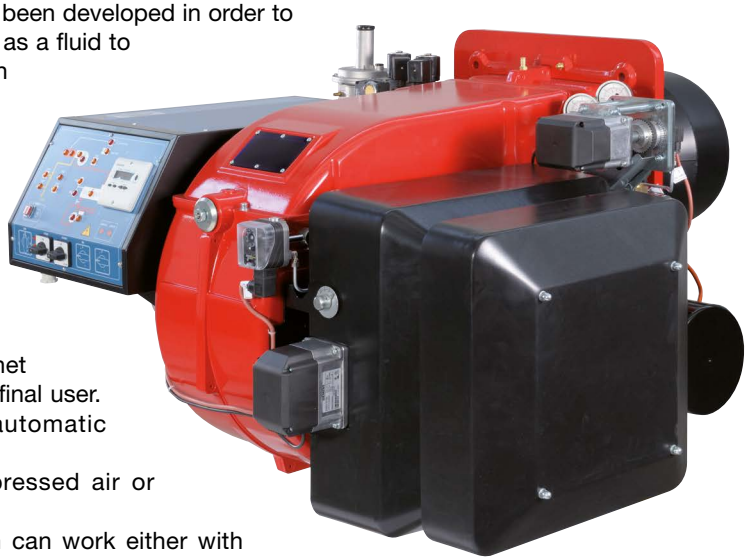

This particular heavy oil burners series has been developed in order to use compressed air or, alternatively, steam as a fluid to atomize the fuel with the aim to accomplish a better combustion result compared to the one gained using the traditional atomizing systems.
These burners are provided with a low pressure nozzle which allows consumption levels to be kept low and which also limits the general wear of the whole atomization system.
All burners are progressive and are completed with an electrical control cabinet and with a pump oil to be installed by the final user.
Furthermore, the nozzle performs an automatic cleaning process at the end of each cycle.
The plant must be provided with compressed air or steam at 8 bar.
Burners are ignited through a pilot which can work either with natural gas or LPG and are suitable to be used with fuels with a viscosity up to 4.000 cSt at 50°C (530°E at 50°).
The standard version of burners is set up to atomize only with compressed air, when steam is requested for the atomization, the burner will be modified though a specific kit.
However, compressed air must be always present at the burner in the following cases:
- cold start ups when no steam is available
- valve opening for automatic nozzle cleaning.

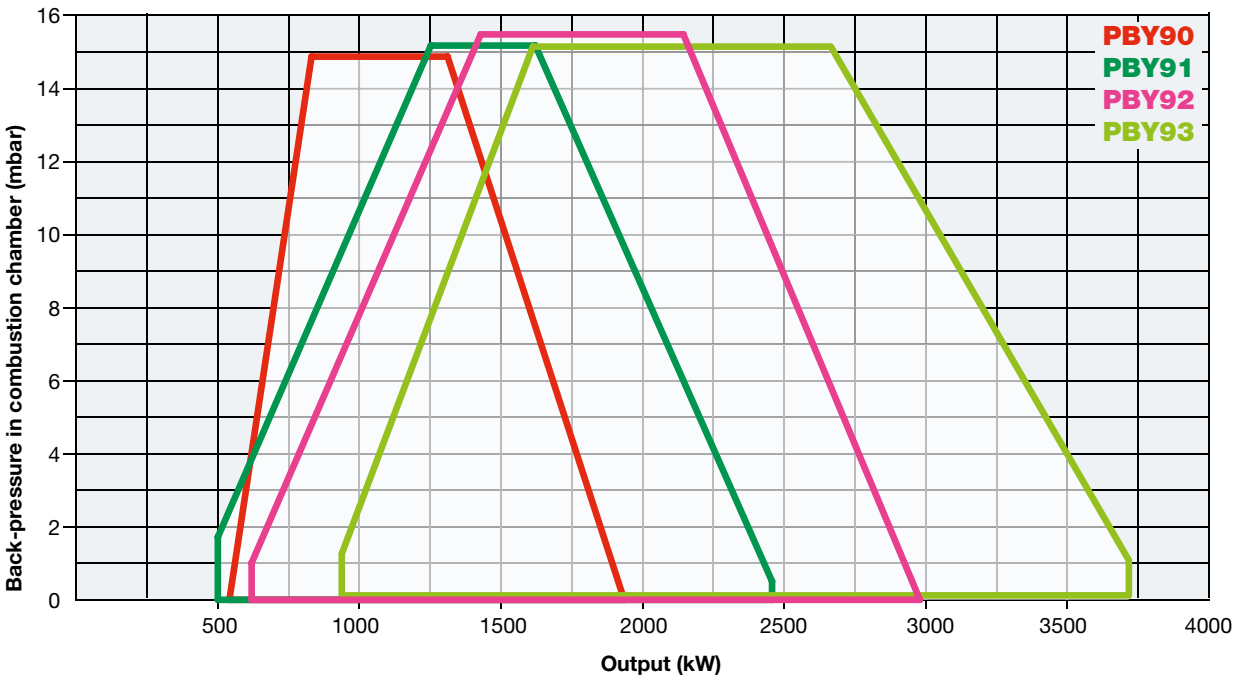

PBY90 PBY91 PBY92 PBY93

PNEUMATIC ATOMIZATION WITH ELECTRONIC OPERATION

TECHNICAL DETAILS

Type	Model	Power kW		Auxiliary electrical power supply	Motor electrical power supply	Fan motor	Pump motor	Resistor
		min.	max.			kW	kW	kW
PBY90	H-.xx.S.xx.A.xx	670	2.000	230 V 1N AC 50 Hz	400 V 3 AC 50 Hz	3,0	0,75	8,0
PBY91	H-.xx.S.xx.A.xx	500	2.500	230 V 1N AC 50 Hz	400 V 3 AC 50 Hz	4,0	0,75	8,0
PBY92	H-.xx.S.xx.A.xx	700	3.000	230 V 1N AC 50 Hz	400 V 3 AC 50 Hz	5,5	0,75	12,0
PBY93	H-.xx.S.xx.A.xx	900	3.700	230 V 1N AC 50 Hz	400 V 3 AC 50 Hz	7,5	0,75	18,0

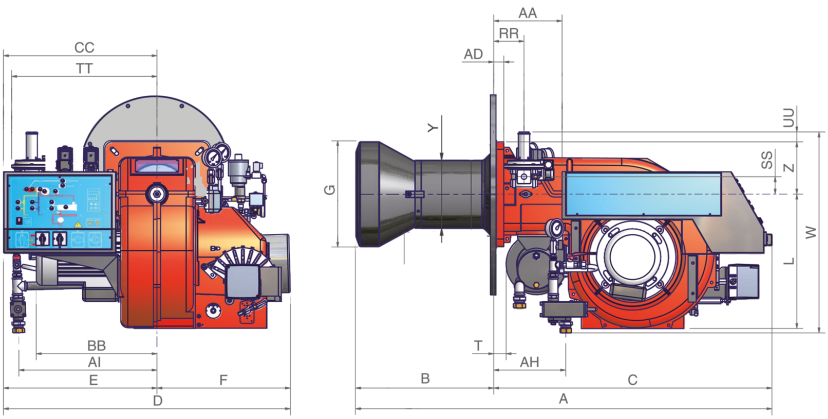

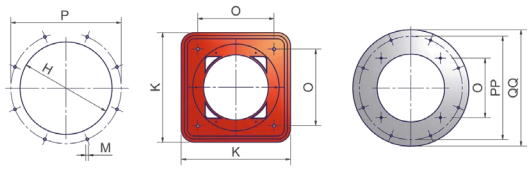

Suggested boiler drilling *Burner flange* *Counterflange*

Low pressure pump set (pump, motor and filter) is included, but supplied loose (not assembled on the burner).

Type	Packaging dimensions (mm)			
	l	p	h	kg
PBY90/91/92	1.730	1.280	1.020	330

Approximate values

Type	Model	Overall dimensions (mm)																												
		A	AA	AD	AH	AI	B	BB	C	CC	D	E	F	G	H	K	L	M	N	O	P	RR	SS	T	TT	UU	W	Y	Z	PP	QQ
																				min. max.											
PBY90	H-.xx.x.xx.A.xx	1287	237	35	250	479	318	419	964	532	992	532	460	306	346	360	464	M12	424	280 310	500	105	60	43	504	34	693	228	180	500	550
PBY91	H-.xx.x.xx.A.xx	1290	237	35	250	479	321	419	964	532	992	532	460	324	364	360	464	M12	424	280 310	500	105	60	43	504	34	693	228	180	500	550
PBY92	H-.xx.x.xx.A.xx	1296	237	35	250	479	327	419	964	532	992	532	460	365	405	360	464	M12	424	280 310	500	105	60	43	504	34	693	228	180	500	550
PBY93	H-.xx.x.xx.A.xx	1296	237	35	250	479	327	419	964	532	992	532	460	365	405	360	464	M12	424	280 310	500	105	60	43	504	34	693	228	180	500	550

Approximate values
The dimension B is reduced by 20 mm with counterflange and gasket.

ELECTRONIC OPERATION

Model	Operation	PBY90 Code	PBY90 Price €	PBY91 Code	PBY91 Price €
HEAVY OIL 4000 cSt at 50°C (530°E at 50°C)					
H-.PR.S.xx.A.EA	PR	01218090A		01218100A	
H-.MD.S.xx.A.EA	MD(*)	01218090E		01218100E	
H-.MD.S.xx.A.ES	MD(*)	01218090S		01218100S	

Model	Operation	PBY92 Code	PBY92 Price €	PBY93 Code	PBY93 Price €
HEAVY OIL 4000 cSt at 50°C (530°E at 50°C)					
H-.PR.S.xx.A.EA	PR	01218110A		-	
H-.MD.S.xx.A.EA	MD(*)	01218110E		-	
H-.MD.S.xx.A.ES	MD(*)	01218110S		-	

(*) In order for the supply to be completed, the burner must be equipped with the respective modulating probe (see accessory table, page 290).
Steam atomization on request.

In compliance with:
Low Tension Directive 2014/35/UE
Electromagnetic Compatibility Directive 2014/30/UE
Machinery Directive 2006/42/CE

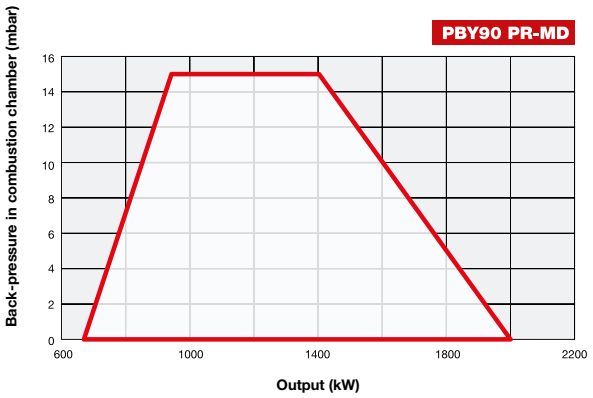

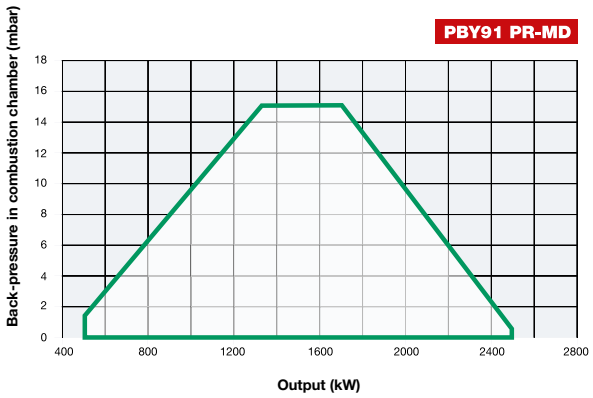

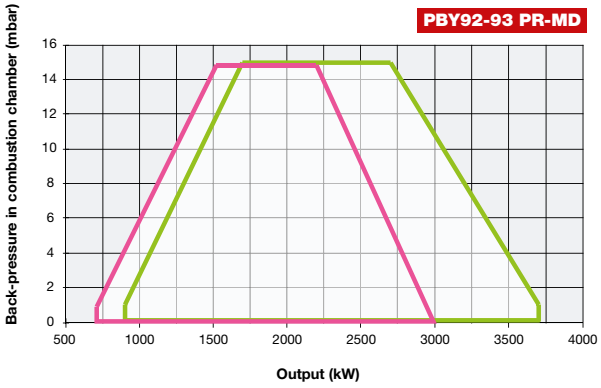

cinquecento SERIES RBY510 RBY515 RBY520 RBY525

PNEUMATIC ATOMIZATION WITH ELECTRONIC OPERATION

This particular heavy oil burners series has been developed in order to use compressed air or, alternatively, steam as a fluid to atomize the fuel with the aim to accomplish a better combustion result compared to the one gained using the traditional atomizing systems.
These burners are provided with a low pressure nozzle which allows consumption levels to be kept low and which also limits the general wear of the whole atomization system.
All burners are progressive and are completed with an electrical control cabinet and with a pump oil to be installed by the final user.
Furthermore, the nozzle performs an automatic cleaning process at the end of each cycle.
The plant must be provided with compressed air or steam at 8 bar.
Burners are ignited through a pilot which can work either with natural gas or LPG and are suitable to be used with fuels with a viscosity up to 4.000 cSt at 50°C (530°E at 50°).
The standard version of burners is set up to atomize only with compressed air, when steam is requested for the atomization, the burner will be modified though a specific kit.
However, compressed air must be always present at the burner in the following cases:
- cold start ups when no steam is available
- valve opening for automatic nozzle cleaning.

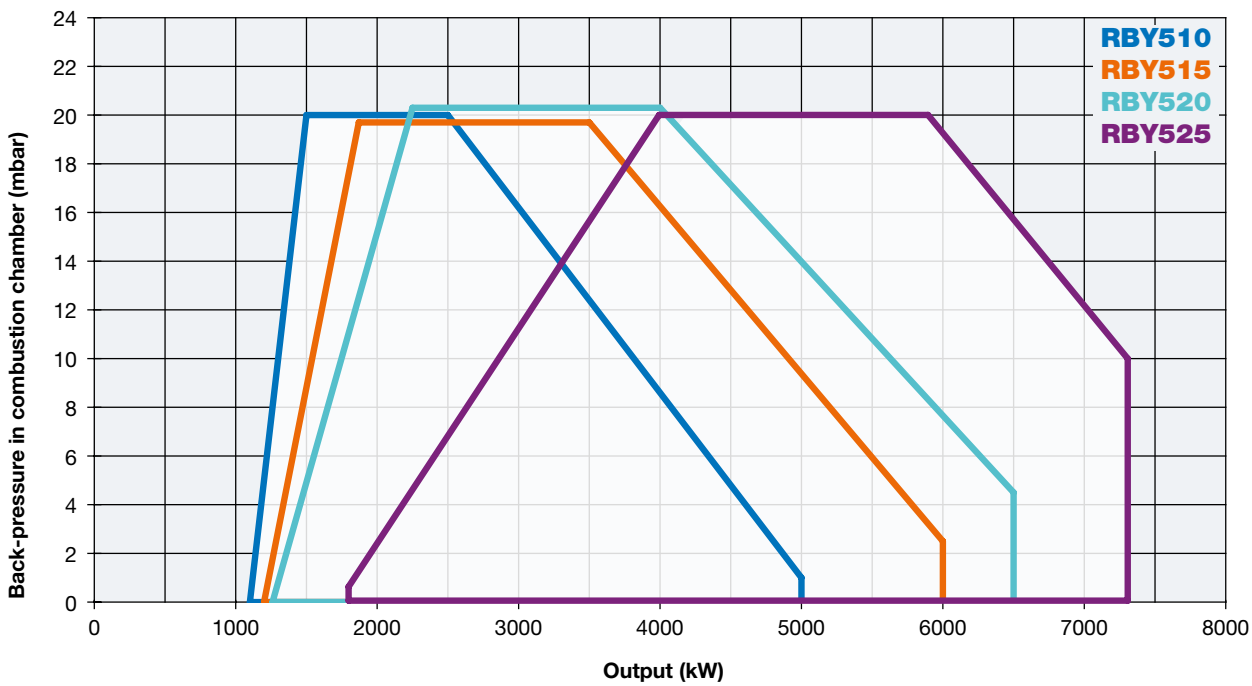

RBY510 RBY515 RBY520 RBY525 cinquecento SERIES

TECHNICAL DETAILS

Type	Model	Power kW		Auxiliary electrical power supply	Motor electrical power supply	Fan motor	Pump motor	Resistor	Noise level
		min.	max.			kW	kW	kW	dBA
RBY510	H-.xx.S.xx.A.xx	1.100	5.000	230 V 1N AC 50 Hz	400 V 3 AC 50 Hz	7,5	0,75	18,0	81,7
RBY515	H-.xx.S.xx.A.xx	1.200	6.000	230 V 1N AC 50 Hz	400 V 3 AC 50 Hz	11,0	0,75	18,0	82,3
RBY520	H-.xx.S.xx.A.xx	1.200	6.500	230 V 1N AC 50 Hz	400 V 3 AC 50 Hz	15,0	0,75	24,0	83,2
RBY525	H-.xx.S.xx.A.xx	1.800	7.300	230 V 1N AC 50 Hz	400 V 3 AC 50 Hz	18,5	0,75	24,0	84,9

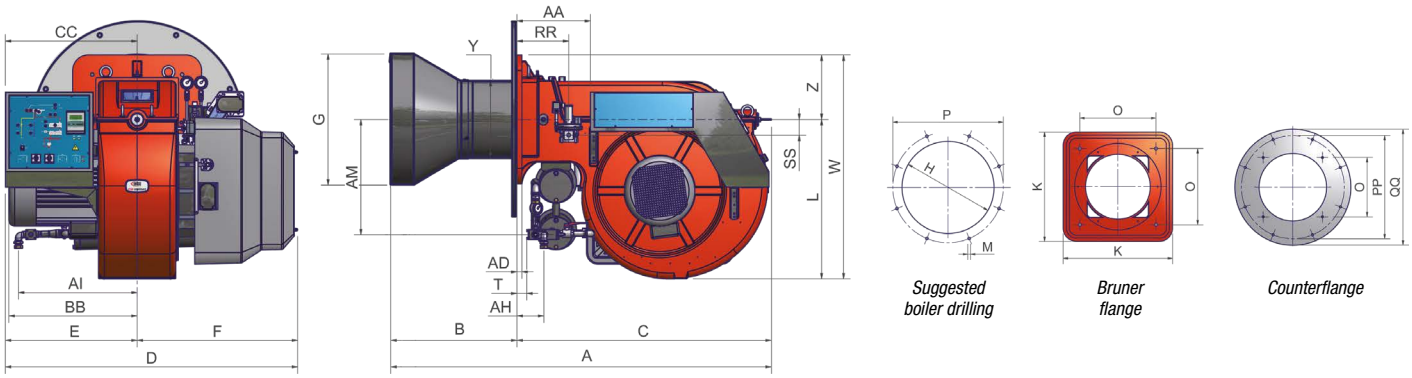

Suggested boiler drilling

Bruner flange

Counterflange

Low pressure pump set (pump, motor and filter) is included, but supplied loose (not assembled on the burner).

Type	Packaging dimensions (mm)			
	l	p	h	kg
RBY510/515/520	1.730	1.430	1.130	410
RBY525	1.730	1.430	1.130	430

Approximate values

Type	Model	Overall dimensions (mm)																											
		A	AA	AD	AH	AI	B	BB	C	CC	D	E	F	G	H	K	L	M	N	O	P	RR	SS	T	TT	W	Y	Z	PP	QQ
RBY510	H-.xx.x.xx.A.xx	1432	219	35	265	448	374	468	1058	571	1213	571	642	387	427	540	498	M14	552	390	800	109	115	44	547	827	329	270	800	850
RBY515	H-.xx.x.xx.A.xx	1436	219	35	265	448	378	508	1058	571	1213	571	642	474	524	540	498	M14	552	390	800	109	115	44	547	827	329	270	800	850
RBY520	H-.xx.x.xx.A.xx	1436	219	35	265	448	378	508	1058	571	1213	571	642	474	524	540	498	M14	552	390	800	109	115	44	547	827	329	270	800	850
RBY525	H-.xx.x.xx.A.xx	1436	219	35	265	448	378	642	1058	571	1284	642	642	474	524	540	498	M14	552	390	800	109	115	44	547	827	329	270	800	850

Approximate values
The dimensions B are reduced by 25 mm with counterflange and gasket.

ELECTRONIC OPERATION

Model	Operation	RBY510 Code	RBY510 Price €	RBY515 Code	RBY515 Price €
HEAVY OIL 4000 cSt at 50°C (530°E at 50°C)					
H-.PR.S.xx.A.EA	PR	02918090A		02918110A	
H-.MD.S.xx.A.EA	MD(*)	02918090E		02918110E	
H-.MD.S.xx.A.ES	MD(*)	02918090S		02918110S	

Model	Operation	RBY520 Code	RBY520 Price €	RBY525 Code	RBY525 Price €
HEAVY OIL 4000 cSt at 50°C (530°E at 50°C)					
H-.PR.S.xx.A.EA	PR	-		02918150A	
H-.MD.S.xx.A.EA	MD(*)	-		02918150E	
H-.MD.S.xx.A.ES	MD(*)	-		02918150S	

(*) In order for the supply to be completed, the burner must be equipped with the respective modulating probe (see accessory table, page 290).
Steam atomization on request

In compliance with:
Low Tension Directive 2014/35/UE
Electromagnetic Compatibility Directive 2014/30/UE
Machinery Directive 2006/42/CE

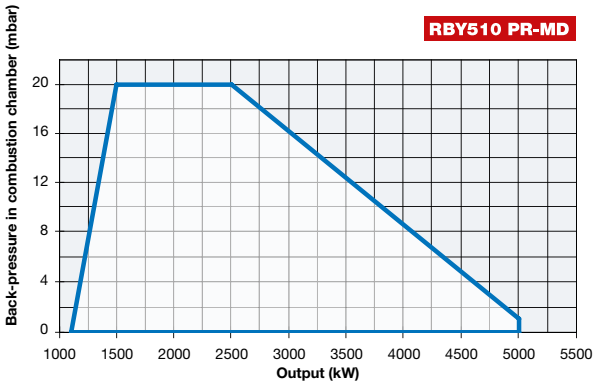

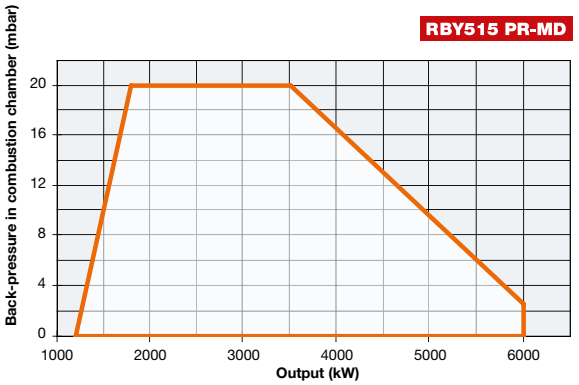

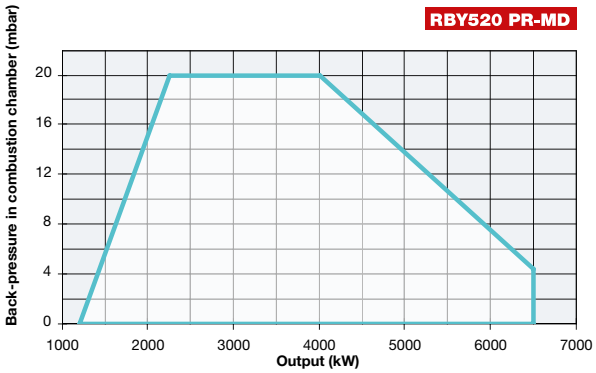

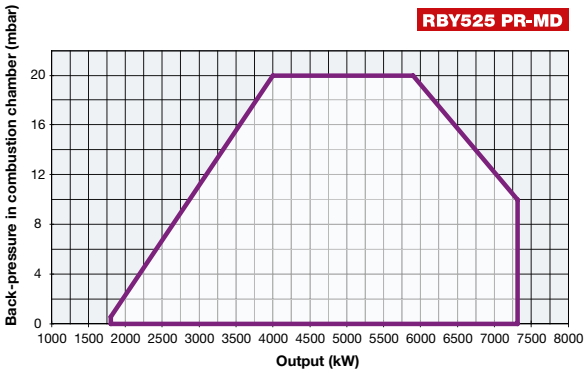

RBY1025 RBY1030 RBY1040 mille SERIES

PNEUMATIC ATOMIZATION WITH ELECTRONIC OPERATION

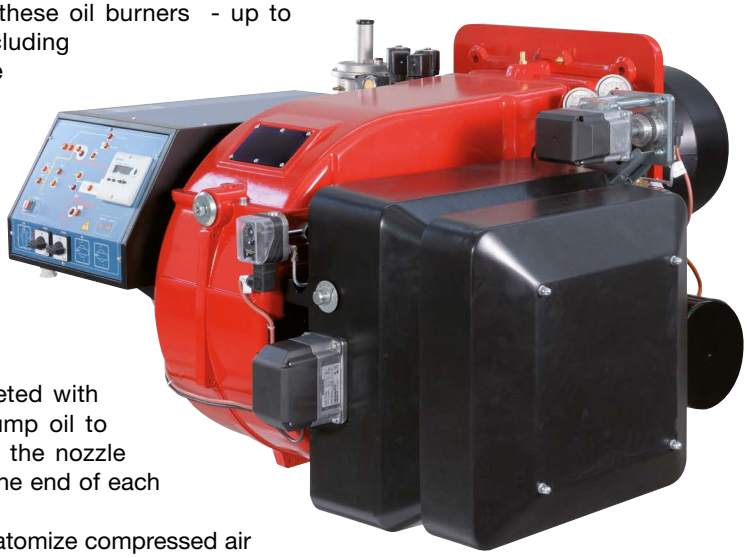

Just like the corresponding MILLE series, these oil burners - up to 4.000 cSt at 50° C (530°E at 50°C) - including emulsified oils, were developed to use compressed air or, when required, steam as a means of atomization in order to achieve better combustion results compared to the one gained using the traditional atomizing systems.
These burners are provided with a low pressure nozzle which allows consumption levels to be kept low and which also limits the general wear of the whole atomization system.
All burners are progressive and are completed with an electrical control cabinet and with a pump oil to be installed by the final user. Furthermore, the nozzle performs an automatic cleaning process at the end of each cycle.
The standard version of burners is set up to atomize compressed air only, when steam is requested for the atomization, the burner will be modified though a specific kit.
Air, or steam, must be present at the burner at pressure from 6 to 10 bar.
Burner are ignited through a pilot which can operate either with natural gas or LPG.

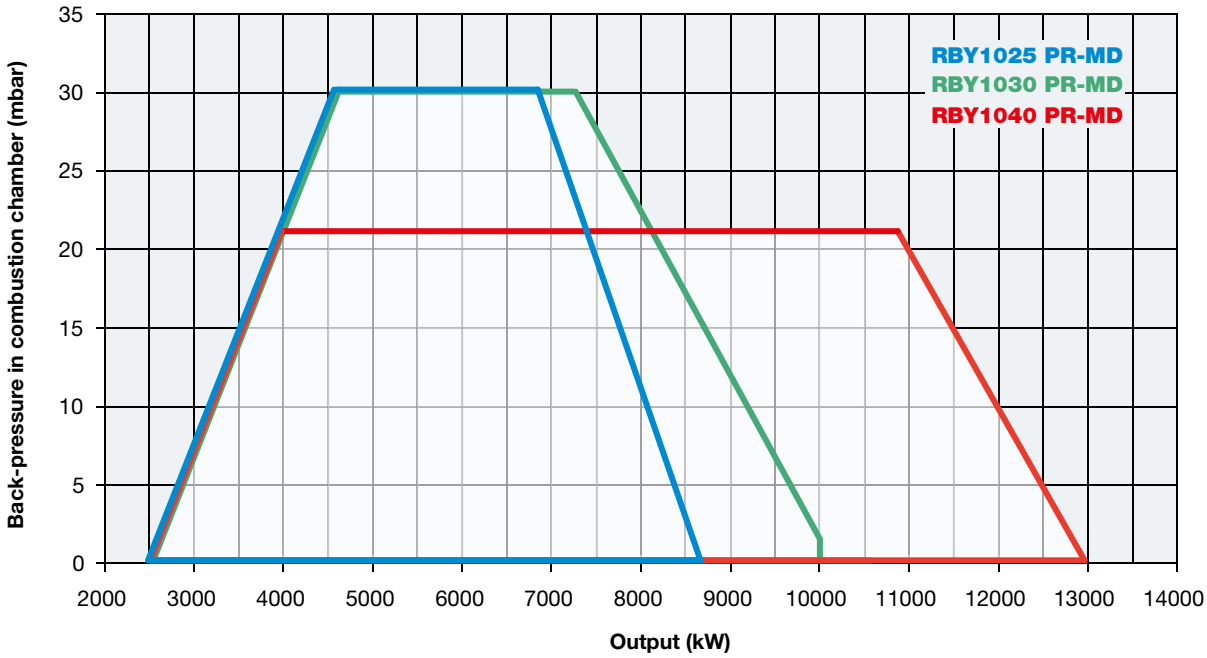

mille SERIES RBY1025 RBY1030 RBY1040

PNEUMATIC ATOMIZATION WITH ELECTRONIC OPERATION

TECHNICAL DETAILS

Type	Model	Power kW		Auxiliary electrical power supply	Motor electrical power supply	Fan motor	Pump motor	Resistor	Noise level
		min.	max.			kW	kW	kW	dBA
RBY1025	H-.xx.S.xx.A.xx	2.550	8.700	230 V 1N AC 50 Hz	400 V 3 AC 50 Hz	18,5	0,75	24	82,2
RBY1030	H-.xx.S.xx.A.xx	2.550	10.000	230 V 1N AC 50 Hz	400 V 3 AC 50 Hz	22,0	1,10	18+18	85,6
RBY1040	H-.xx.S.xx.A.xx	2.550	13.000	230 V 1N AC 50 Hz	400 V 3 AC 50 Hz	30,0	1,10	24+24	85,6

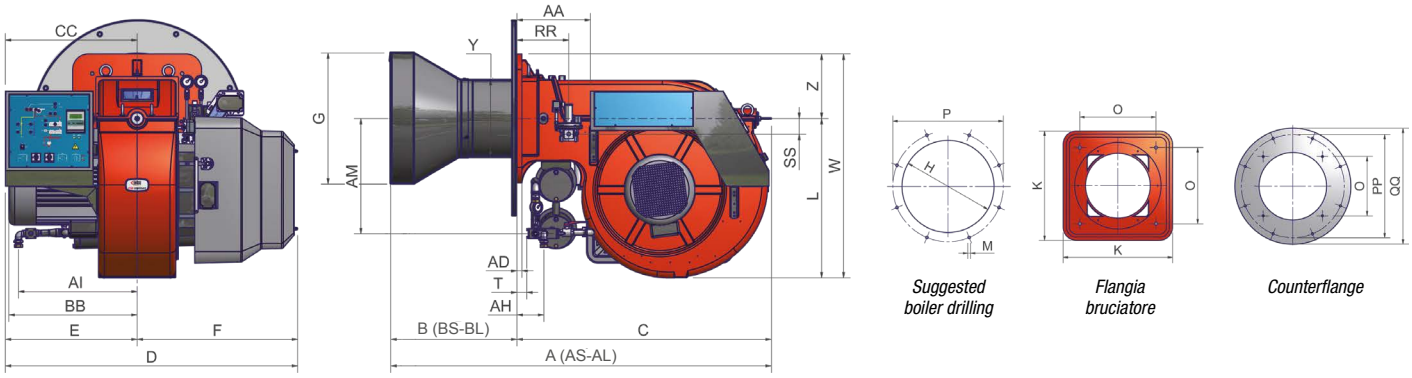

Suggested boiler drilling *Flangia bruciatore* *Counterflange*

Low pressure pump set (pump, motor and filter) is included, but supplied loose (not assembled on the burner).

Type	Packaging dimensions (mm)			
	l	p	h	kg
RBY1025/1030/1040	2.280	1.730	1.360	850

Approximate values

Type	Model	Overall dimensions (mm)																													
		AA	AS	AL	AD	AH	AI	AM	B	BB	BS	BL	C	CC	D	E	F	G	H	K	L	M	N	O	P	RR	SS	T	W	Y	Z	PP	QQ
RBY1025	H-.xx.x.xx.A.xx	377	1669	1865	25	304	465	335	410	641	376	572	1293	680	1502	680	822	474	524	660	816	M16	651	460	800	265	80	95	1146	381	330	800	900
RBY1030	H-.xx.x.xx.A.xx	377	1646	-	25	138	608	589	353	657	353	-	1293	680	1502	680	822	633	693	660	816	M16	651	460	800	265	80	50	1146	400	330	800	900
RBY1040	H-.xx.x.xx.A.xx	377	1654	1873	25	138	608	589	361	657	361	580	1293	680	1502	680	822	671	731	660	816	M16	-	460	800	265	80	50	1146	412	330	800	900

Approximate values
The units pumps are separated
The dimensions BS and BL are reduced by 25 mm with counterflange and gasket.

ELECTRONIC OPERATION

Model	Operation	RBY1025 Code	RBY1025 Price €	RBY1030 Code	RBY1030 Price €	RBY1040 Code	RBY1040 Price €
HEAVY OIL 4000 cSt at 50°C (530°E at 50°C)							
H-.PR.S.xx.A.EA	PR	02318220A		02318240A		02318260A	
H-.PR.L.xx.A.EA	PR	02318230A		02318250A		02318270A	
H-.MD.S.xx.A.EA	MD(*)	02318220E		02318240E		02318260E	
H-.MD.L.xx.A.EA	MD(*)	02318230E		02318250E		02318270E	
H-.MD.S.xx.A.ES	MD(*)	02318220S		02318240S		02318260S	
H-.MD.L.xx.A.ES	MD(*)	02318230S		02318250S		02318270S	

(*) In order for the supply to be completed, the burner must be equipped with the respective modulating probe (see accessory table, page 290).
Steam atomization on request

In compliance with:
Low Tension Directive 2014/35/UE
Electromagnetic Compatibility Directive 2014/30/UE
Machinery Directive 2006/42/CE

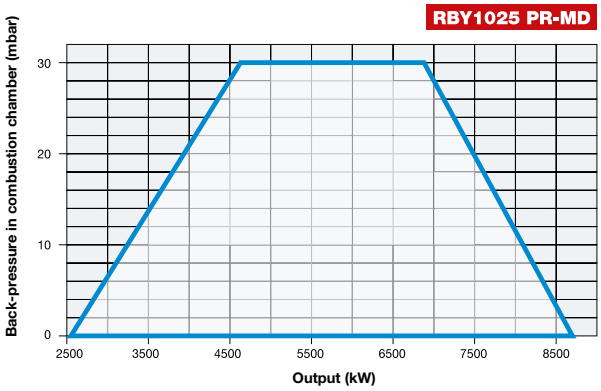

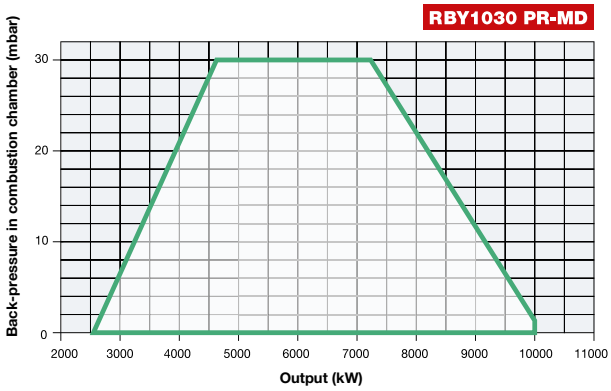

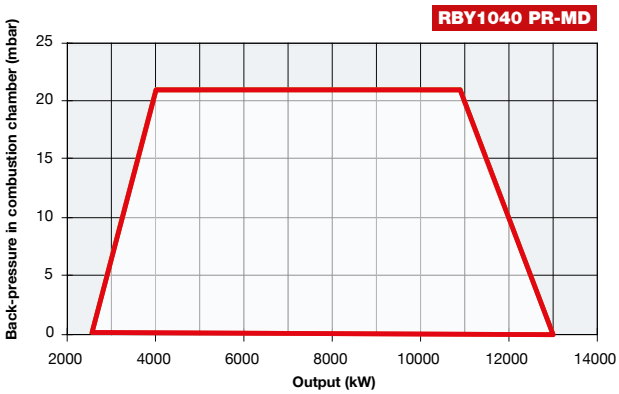

duemila SERIES RBY2050 RBY2060 RBY2080

PNEUMATIC ATOMIZATION WITH ELECTRONIC OPERATION

Just like the corresponding DUEMILA series, these oil burners - up to 4.000 cSt at 50° C (530°E at 50°C) - including emulsified oils, were developed to use compressed air or, when required, steam as a means of atomization in order to achieve better combustion results compared to the one gained using the traditional atomizing systems.
These burners are provided with a low pressure nozzle which allows consumption levels to be kept low and which also limits the general wear of the whole atomization system.
All burners are progressive and are completed with an electrical control cabinet and with a pump oil to be installed by the final user. Furthermore, the nozzle performs an automatic cleaning process at the end of each cycle.
The standard version of burners is set up to atomize compressed air only, when steam is requested for the atomization, the burner will be modified though a specific kit.
Air, or steam, must be present at the burner at pressure from 6 to 10 bar.
Burner are ignited through a pilot which can operate either with natural gas or LPG.

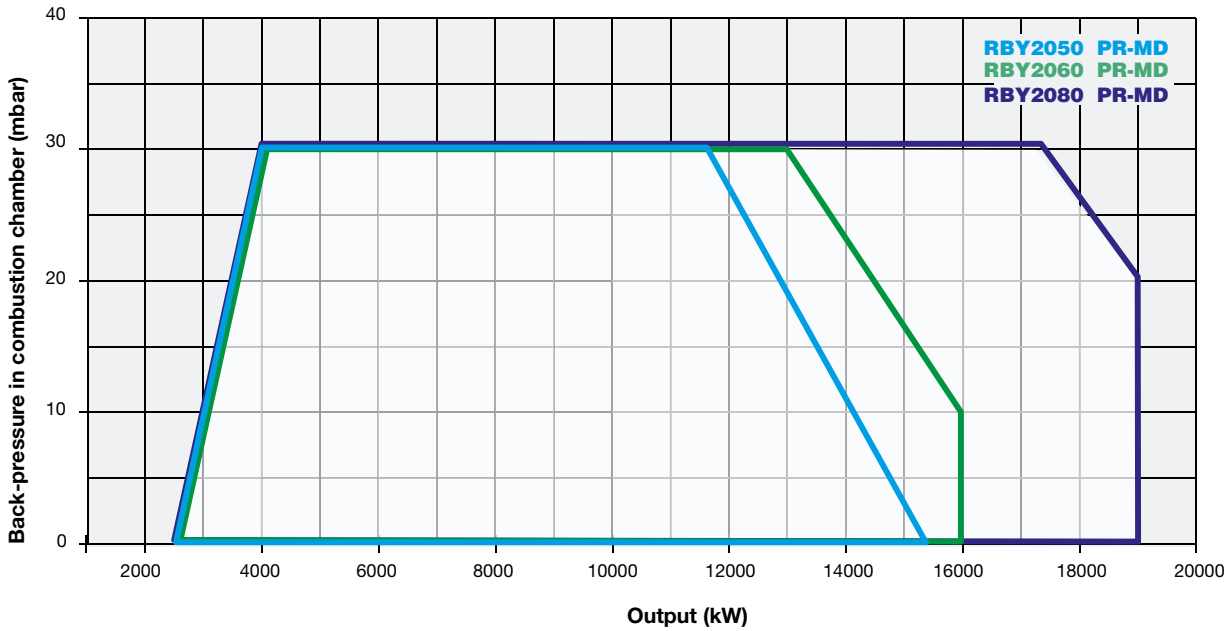

RBY2050 RBY2060 RBY2080 duemila SERIES

TECHNICAL DETAILS

Type	Model	Power kW		Auxiliary electrical power supply	Motor electrical power supply	Fan motor	Pump motor	Resistor	Noise level
		min.	max.			kW	kW	kW	dBA
RBY2050	H-.xx.S.xx.A.xx	2.500	15.200	230 V 1N AC 50 Hz	400 V 3 AC 50 Hz	37	1,1	24 + 24	92,5
RBY2060	H-.xx.S.xx.A.xx	2.500	16.000	230 V 1N AC 50 Hz	400 V 3 AC 50 Hz	45	1,1	24 + 24	91,7
RBY2080	H-.xx.S.xx.A.xx	2.500	19.000	230 V 1N AC 50 Hz	400 V 3 AC 50 Hz	55	1,1	24 + 24	91,7

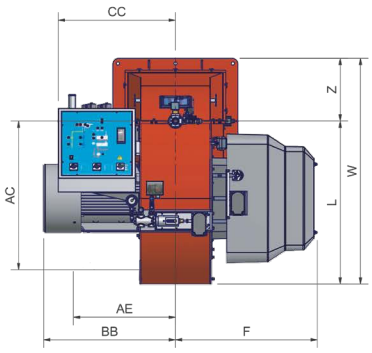

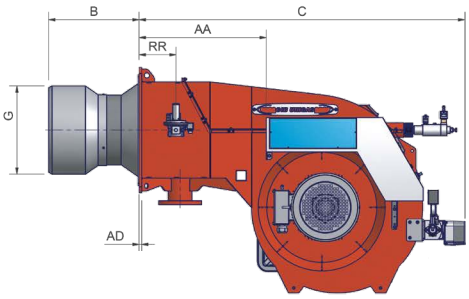

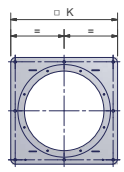

Burner flange

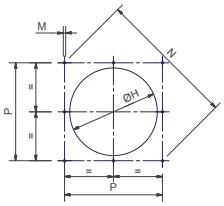

Suggested boiler drilling

Low pressure pump set (pump, motor and filter) is included, but supplied loose (not assembled on the burner).

Boiler drilling drill must be confirmed according the firing head.

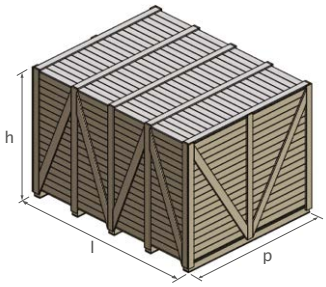

Type	Packaging dimensions (mm)			
	l	p	h	kg
RBY2050	2.396	1.886	1.969	1.370
RBY2060	2.396	1886	1969	1.450
RBY2080	2.396	1.886	1.969	1.550

Approximate values

Type	Model	Overall dimensions (mm)																		
		AA	AC	AD	AE	B	BB	C	CC	F	G	H	K	L	M	N	P	RR	W	Z
RBY2050	H-.xx.S.xx.A.xx	741	866	15	595	*	768	1898	735	827	*	*	730	949	M16	948	670	215	1314	365
RBY2060	H-.xx.S.xx.A.xx	741	866	15	645	*	807	1890	735	846	*	*	850	949	M16	1117	790	215	1374	425
RBY2080	H-.xx.S.xx.A.xx	741	866	15	645	*	885	1890	735	846	*	*	850	949	M16	1117	790	215	1374	425

Approximate values
* The B, H, G dimensions must be confirmed from our DPT

Monoblock burners 2000 series are supplied complete with a steel supporting frame: burner installation and manutention are greatly simplified.
The frame is equipped with wheels to easily move the burner, and its height is adjustable to match any type of boiler or furnace.

SUPPORTING FRAME FOR BURNERS 2050 SERIES

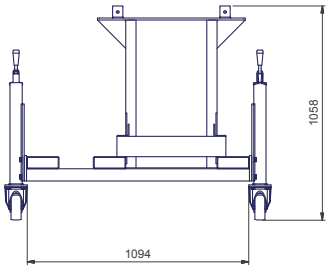

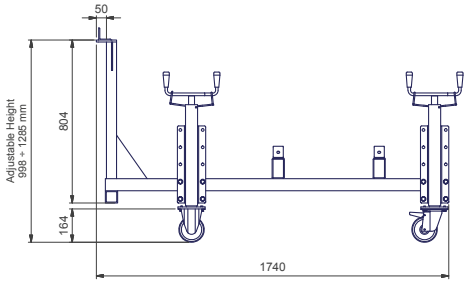

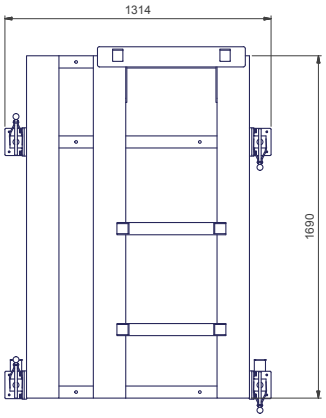

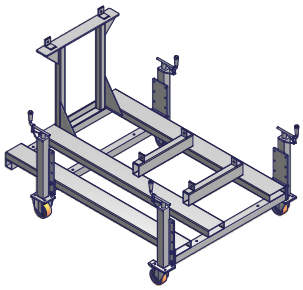

SUPPORTING FRAME FOR BURNERS 2060/2080 SERIES

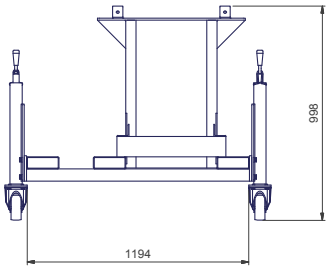

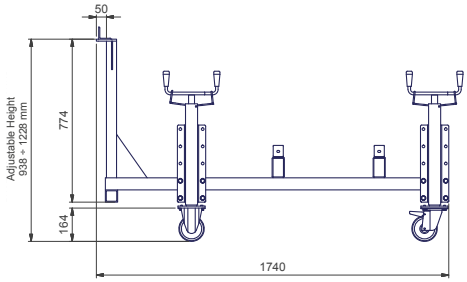

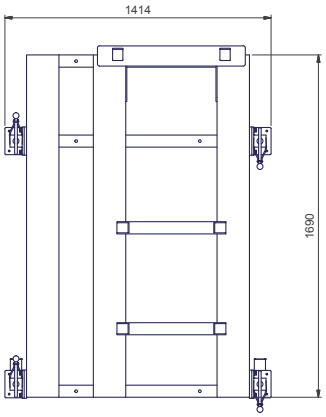

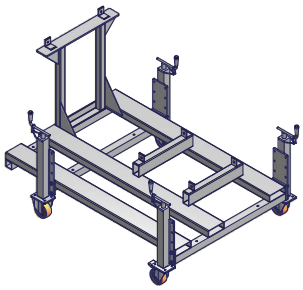

RBY2050 RBY2060 RBY2080 duemila SERIES

ELECTRONIC OPERATION

Model	Operation	RBY2050 Code	RBY2050 Price €	RBY2060 Code	RBY2060 Price €	RBY2080 Code	RBY2080 Price €
HEAVY OIL 4000 cSt at 50°C (530°E at 50°C)							
H-.PR.S.xx.A.EA	PR	03218045A		-		-	
H-.MD.S.xx.A.EA	MD(*)	03218045E		-		-	
H-.MD.S.xx.A.ES	MD(*)	03218045S		03218055S		03218065S	

(*) In order for the supply to be completed, the burner must be equipped with the respective modulating probe (see accessory table, page 290).

In compliance with:
Low Tension Directive 2014/35/UE
Electromagnetic Compatibility Directive 2014/30/UE
Machinery Directive 2006/42/CE

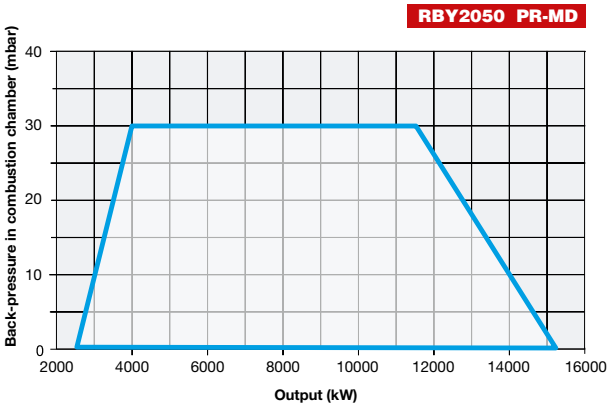

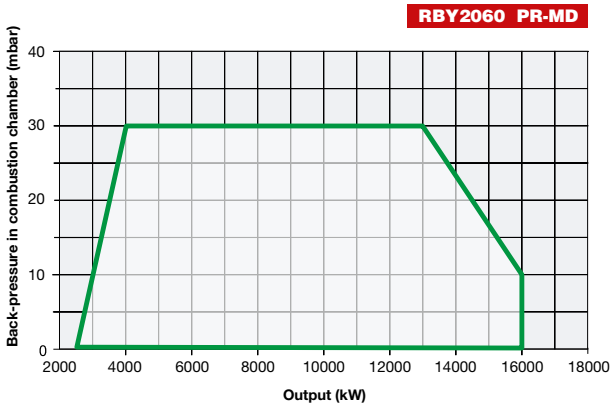

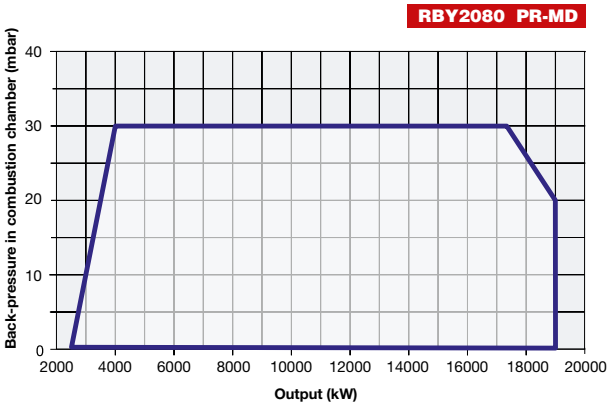

DUAL FUEL BURNERS NATURAL GAS/LIGHT OIL

novanta series	NEW novanta series	NEW cinquecento series	cinquecento series
HR91A - PR/MD	**G290A** - PR/MD...SR	**H455A** - PR/MD...SR	**HR512A** - PR/MD
HR92A - PR/MD	**G310A** - PR/MD...SR	**H630A** - PR/MD...SR	**HR515A** - PR/MD
HR93A - PR/MD		**H685A** - PR/MD...SR	**HR520A** - PR/MD
			HR525A - PR/MD

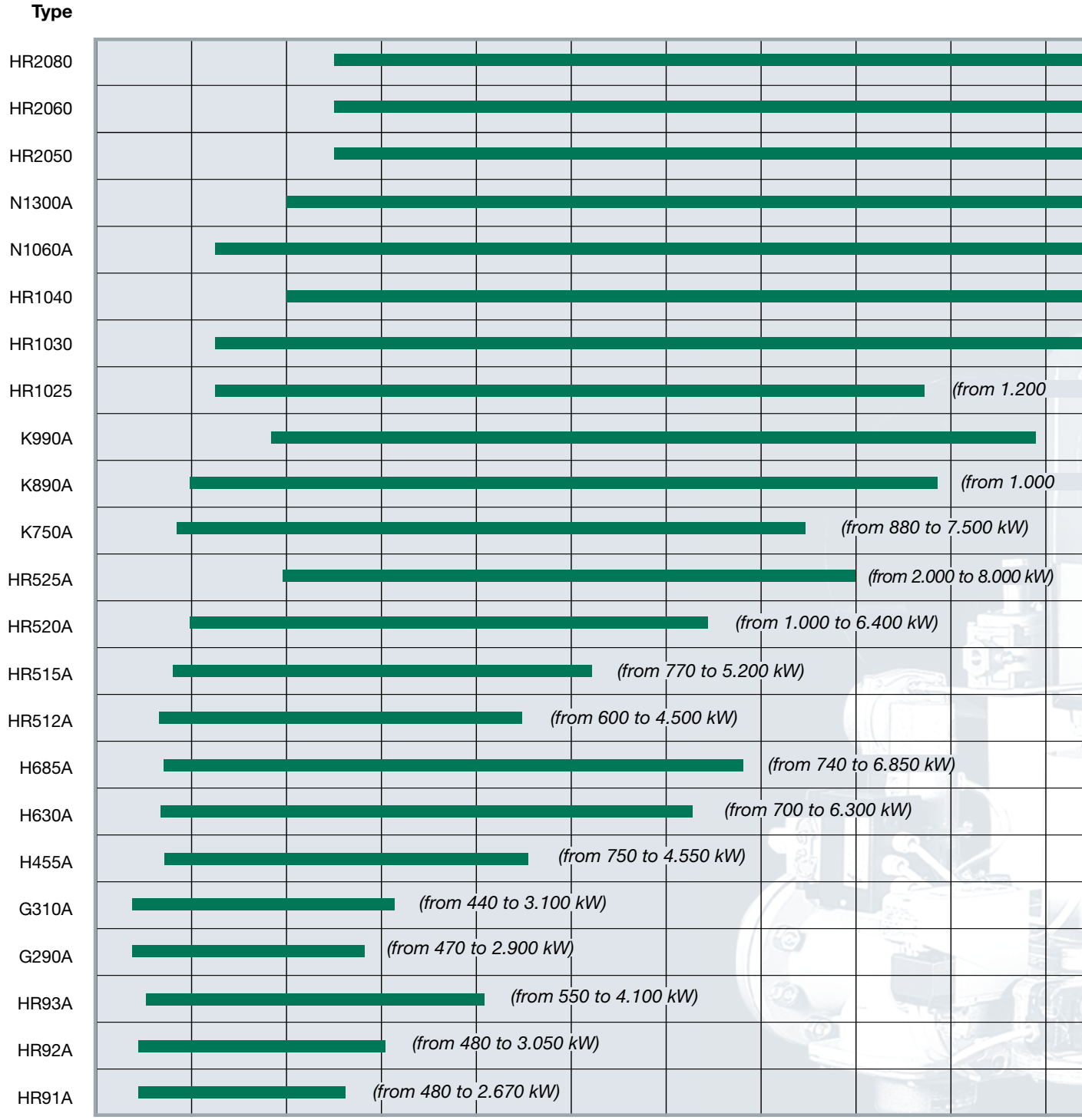

NEW cinquecento series	mille series	NEW mille series	duemila series
K750A - PR/MD...SR	**HR1025** - PR/MD	**N1060A** - PR/MD...SR	**HR2050** - PR/MD
K880A - PR/MD...SR	**HR1030** - PR/MD	**N1300A** - PR/MD...SR	**HR2060** - PR/MD
K990A - PR/MD...SR	**HR1040** - PR/MD		**HR2080** - PR/MD

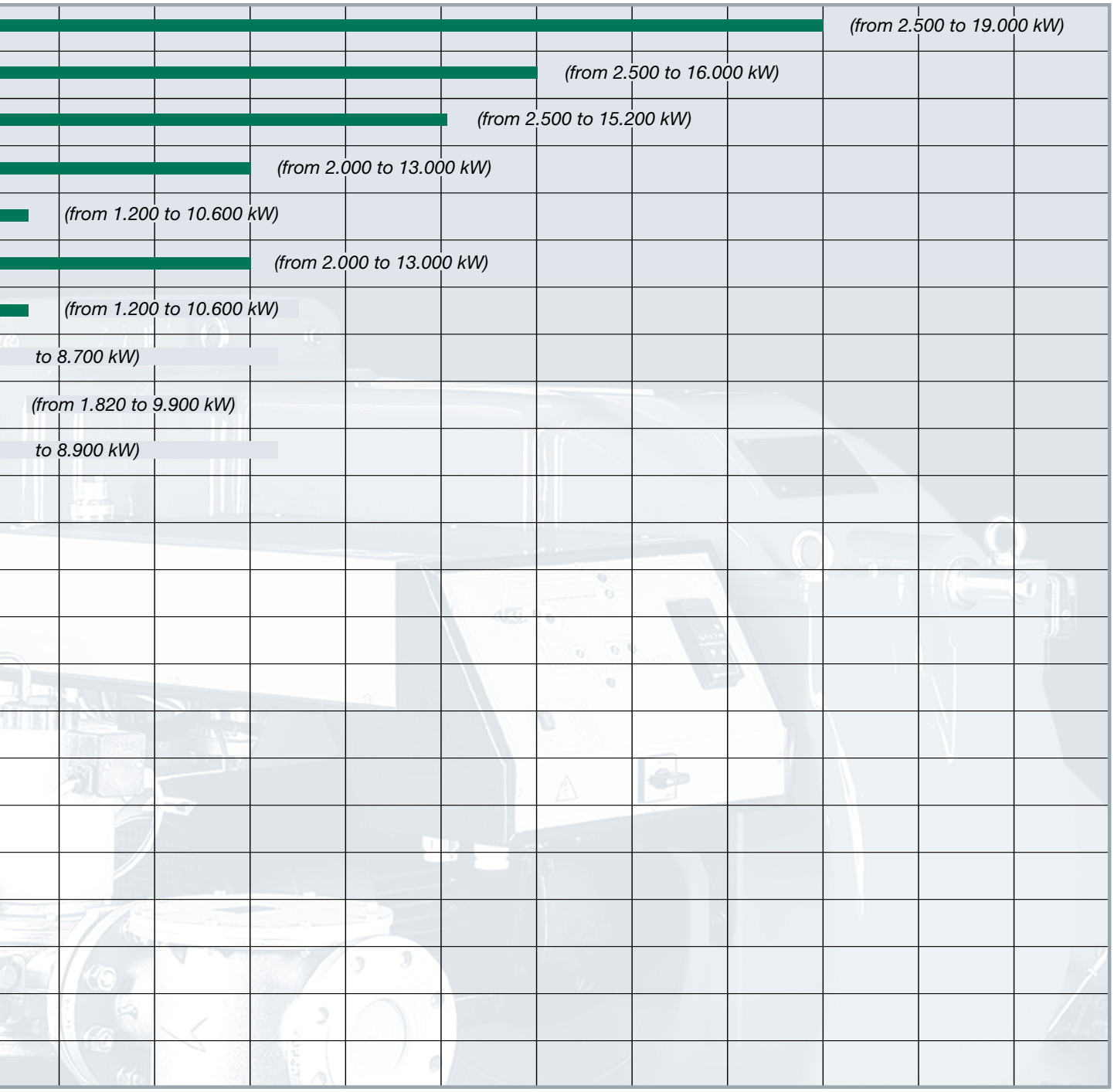

novanta SERIES HR91A HR92A HR93A

GAS/LIGHT OIL

The NOVANTA series, available in both progressive and modulating operations, represents the culmination of our experience in the field of medium-large capacity burners (up to 4.100 kW).
Like all the other dual fuels models, this series perfectly combine the mechanical devices and systems typical of gas burners with the ones of light oil burners. In this manner these series can burn the two flues separately.
This is possible because these burners are equipped with an independent electric motor for the activation of the oil pump. As a consequence during gas firing, the oil pump motor does not operate and remains off.
These burners are equipped with a high performance combustion head, designed to achieve an high irradiating flame when they run on natural gas. Instead, when they run on light oil, they are equipped with a by-pass nozzle which, using a pressure regulator, can reach a modulating ratio of 1:3.
The control panel facia is printed with a mimic diagram fitted with neon lamps to indicate the different stages of burners operation and any abnormalities. Therefore, the burners are provided with an UV photocell to control the flame during the operation.

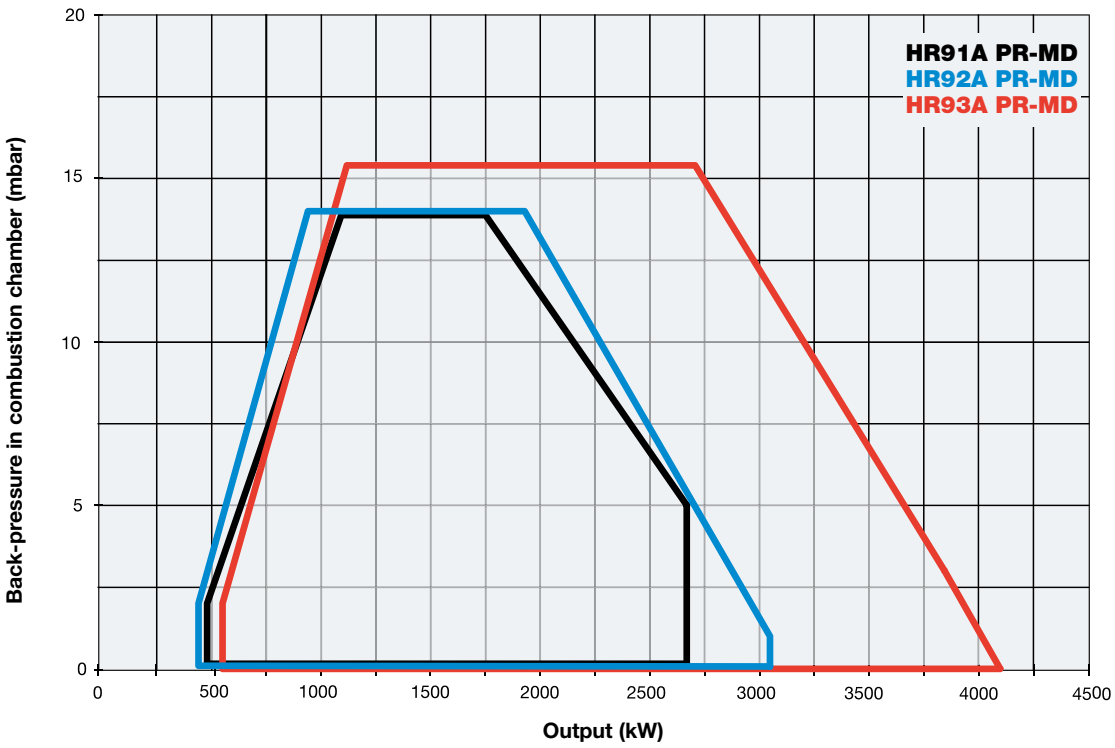

TECHNICAL DETAILS

Type	Model	Power kW		Auxiliary electrical power supply	Motor electrical power supply	Fan motor	Pump motor	Gas connections	Noise level
		min.	max.			kW	kW	Rp	dBA
HR91A	MG.xx.S.xx.A.1.xxx	480	2.670	230 V 1N AC 50 Hz	400 V 3 AC 50 Hz	4,0	1,1	2” - DN65 - DN80 - DN100	74,5
HR92A	MG.xx.S.xx.A.1.xxx	480	3.050	230 V 1N AC 50 Hz	400 V 3 AC 50 Hz	5,5	1,1	2” - DN65 - DN80 - DN100	76,9
HR93A	MG.xx.S.xx.A.1.xxx	550	4.100	230 V 1N AC 50 Hz	400 V 3 AC 50 Hz	7,5	1,1	2” - DN65 - DN80 - DN100	77,4

For the configuration of the gas train, see pages 116-117.

Type	Packaging dimensions (mm)			
	l	p	h	kg
HR91A/HR92A/HR93A	1.730	1.280	1.020	315

Approximate values

HR91A

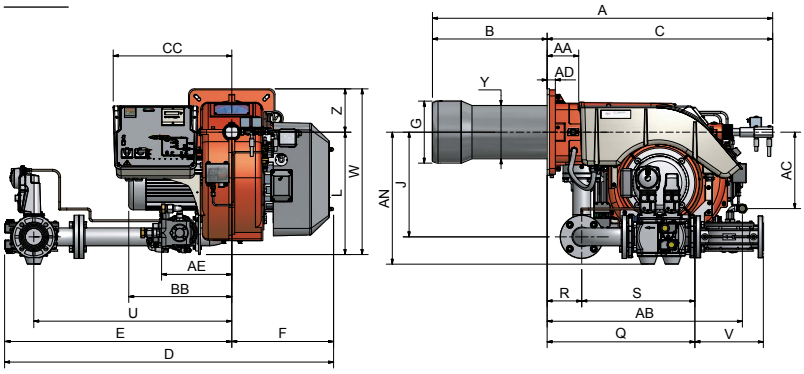

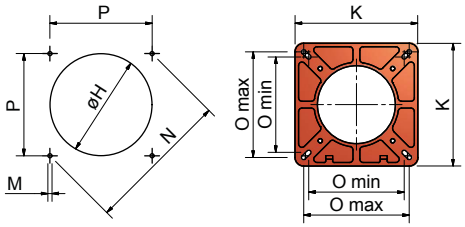

Suggested boiler drilling *Burner flange*

Type	Model	Overall dimensions (mm)																														
		A	AA	AB	AC	AD	AE	AN	B	BB	C	CC	D	E	F	G	H	J	K	L	M	N	O min.	O max.	P	Q	R	S	U	V	W	Y	Z
HR91A	MG.xx.S.xx.A.1.50	1495	135	835	327	35	300	550	490	441	1005	507	1160	725	435	265	295	447	360	523	M12	424	280	310	300	532	148	384	624	190	708	228	185
HR91A	MG.xx.S.xx.A.1.65	1495	135	835	327	35	300	564	490	441	1005	507	1406	971	435	265	295	447	360	523	M12	424	280	310	300	632	148	484	846	292	708	228	185
HR91A	MG.xx.S.xx.A.1.80	1495	135	835	327	35	300	579	490	441	1005	507	1437	1002	435	265	295	447	360	523	M12	424	280	310	300	683	148	535	875	313	708	228	185
HR91A	MG.xx.S.xx.A.1.100	1495	135	835	327	35	300	592	490	441	1005	507	1520	1085	435	265	295	447	360	523	M12	424	280	310	300	790	148	642	942	353	708	228	185

HR92A - HR93A

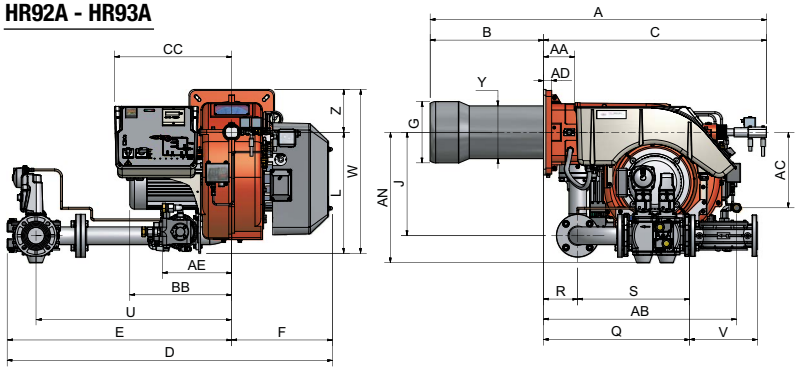

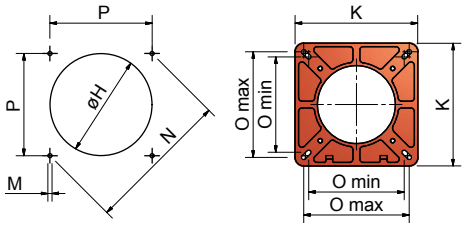

Suggested boiler drilling *Burner flange*

Type	Model	Overall dimensions (mm)																														
		A	AA	AB	AC	AD	AE	AN	B	BB	C	CC	D	E	F	G	H	J	K	L	M	N	O min.	O max.	P	Q	R	S	U	V	W	Y	Z
HR92A	MG.xx.S.xx.A.1.50	1495	135	835	327	35	300	550	490	441	1005	507	1160	725	435	269	299	447	360	523	M12	424	280	310	300	532	148	384	624	190	708	228	185
HR92A	MG.xx.S.xx.A.1.65	1495	135	835	327	35	300	564	490	441	1005	507	1406	971	435	269	299	447	360	523	M12	424	280	310	300	632	148	484	846	292	708	228	185
HR92A	MG.xx.S.xx.A.1.80	1495	135	835	327	35	300	579	490	441	1005	507	1437	1002	435	269	299	447	360	523	M12	424	280	310	300	683	148	535	875	313	708	228	185
HR92A	MG.xx.S.xx.A.1.100	1495	135	835	327	35	300	592	490	441	1005	507	1520	1085	435	269	299	447	360	523	M12	424	280	310	300	790	148	642	942	353	708	228	185
HR93A	MG.xx.S.xx.A.1.50	1495	135	835	327	35	300	550	495	493	1005	507	1160	725	435	304	344	447	360	523	M12	424	280	310	300	532	148	384	624	190	708	228	185
HR93A	MG.xx.S.xx.A.1.65	1495	135	835	327	35	300	564	495	493	1005	507	1406	971	435	304	344	447	360	523	M12	424	280	310	300	632	148	484	846	292	708	228	185
HR93A	MG.xx.S.xx.A.1.80	1495	135	835	327	35	300	579	495	493	1005	507	1437	1002	435	304	344	447	360	523	M12	424	280	310	300	683	148	535	875	313	708	228	185
HR93A	MG.xx.S.xx.A.1.100	1495	135	835	327	35	300	592	495	493	1005	507	1520	1085	435	304	344	447	360	523	M12	424	280	310	300	790	148	642	942	353	708	228	185

Approximate values

MECHANICAL OPERATION

Model	Gas train	Operation	HR91A Code	HR91A Price €	HR92A Code	HR92A Price €	HR93A Code	HR93A Price €
MG.PR.S.xx.A.1.50	2”	PR	012073753		012074153		012074553	
MG.PR.S.xx.A.1.65	DN65	PR	012073853		012074253		012074653	
MG.PR.S.xx.A.1.80	DN80	PR	012073953		012074353		012074753	
MG.PR.S.xx.A.1.100	DN100	PR	012074053		012074453		012074853	
MG.MD.S.xx.A.1.50	2”	MD(*)	012073754		012074154		012074554	
MG.MD.S.xx.A.1.65	DN65	MD(*)	012073854		012074254		012074654	
MG.MD.S.xx.A.1.80	DN80	MD(*)	012073954		012074354		012074754	
MG.MD.S.xx.A.1.100	DN100	MD(*)	012074054		012074454		012074854	

(*) In order for the supply to be completed, the burner must be equipped with the respective modulating probe (see accessory table, page 290).

In compliance with:
- **GAR Directive 2016/426/EU**
- **Low Tension Directive 2014/35/UE**
- **Electromagnetic Compatibility Directive 2014/30/UE**
- **Machinery Directive 2006/42/CE**

ELECTRONIC OPERATION

Model	Gas train	Operation	HR91A Code	HR91A Price €	HR92A Code	HR92A Price €	HR93A Code	HR93A Price €
MG.PR.S.xx.A.1.50.EC	2”	PR	01207265C		01207295C		01207335C	
MG.PR.S.xx.A.1.65.EC	DN65	PR	01207275C		01207305C		01207345C	
MG.PR.S.xx.A.1.80.EC	DN80	PR	01207285C		01207315C		01207355C	
MG.PR.S.xx.A.1.100.EC	DN100	PR	01207295C		01207325C		01207365C	
MG.MD.S.xx.A.1.50.EC	2”	MD(*)	01207265G		01207295G		01207335G	
MG.MD.S.xx.A.1.65.EC	DN65	MD(*)	01207275G		01207305G		01207345G	
MG.MD.S.xx.A.1.80.EC	DN80	MD(*)	01207285G		01207315G		01207355G	
MG.MD.S.xx.A.1.100.EC	DN100	MD(*)	01207295G		01207325G		01207365G	
MG.MD.S.xx.A.1.50.ES	2”	MD(*)	01207265S		01207295S		01207335S	
MG.MD.S.xx.A.1.65.ES	DN65	MD(*)	01207275S		01207305S		01207345S	
MG.MD.S.xx.A.1.80.ES	DN80	MD(*)	01207285S		01207315S		01207355S	
MG.MD.S.xx.A.1.100.ES	DN100	MD(*)	01207295S		01207325S		01207365S	

(*) In order for the supply to be completed, the burner must be equipped with the respective modulating probe (see accessory table, page 290).

In compliance with:
- **GAR Directive 2016/426/EU**
- **Low Tension Directive 2014/35/UE**
- **Electromagnetic Compatibility Directive 2014/30/UE**
- **Machinery Directive 2006/42/CE**

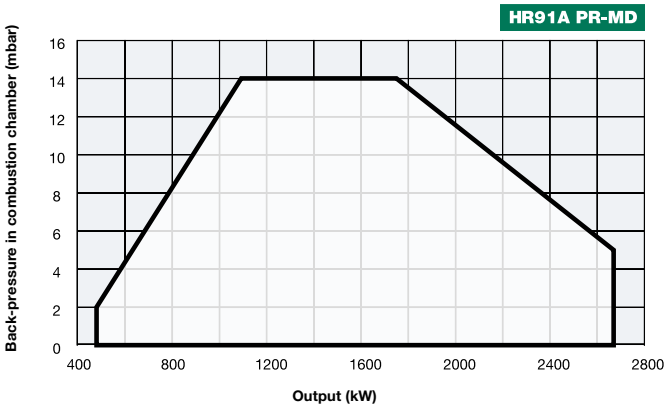

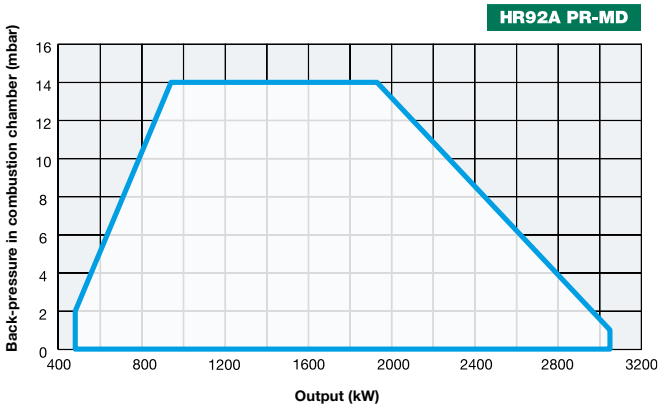

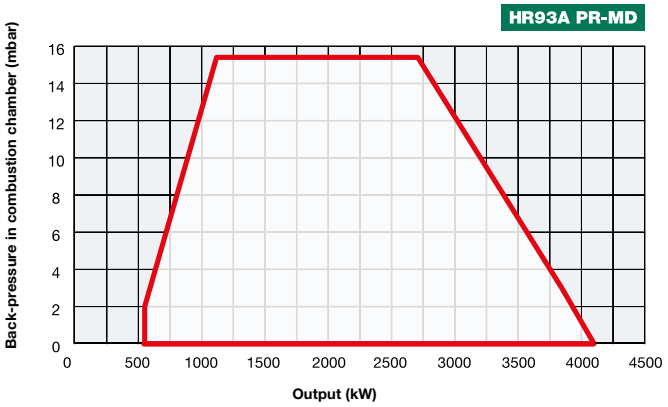

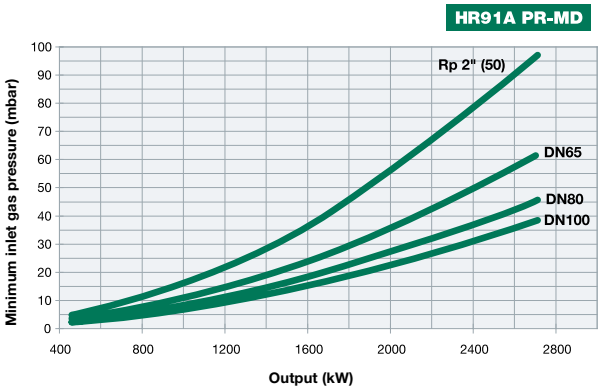

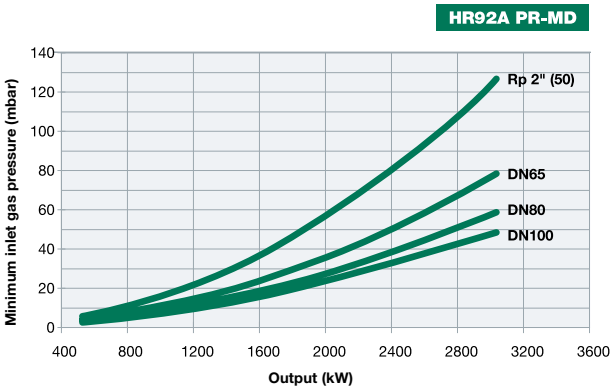

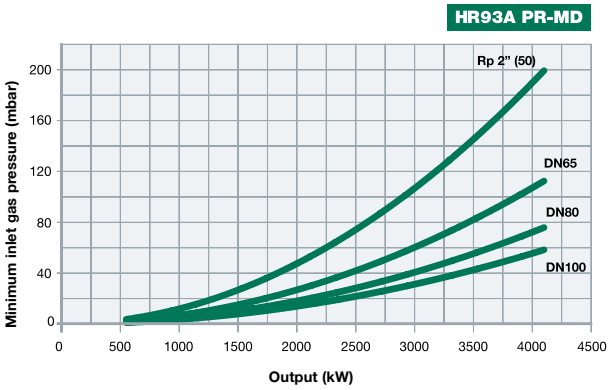

Attention: the graph shows the value of the gas output (kW) against the corresponding pressure without the combustion chamber back pressure. To know the minimum gas pressure at gas train, in order to get the gas output, it is necessary to add the boiler back pressure to the value read on the curve.

novanta SERIES G290A G310A...SR

NEW

GAS/LIGHT OIL

The new standard G type NOVANTA series **Low NO_x** burners **Class 2 (< 120 mg/kWh)**, made in aluminum housing with a backward curved centrifugal impeller is studied and developed to get high performance and efficiency combined with low emissions.
In this manner these series can burn the two flues separately. This is possible because these burners are equipped with an independent electric motor for the activation of the oil pump. As a consequence during gas firing, the oil pump motor does not operate and remains off.
These burners are equipped with a high performance combustion head, designed to achieve an high irradiating flame when they run on natural gas. Instead, when they run on light oil, they are equipped with a by-pass nozzle which, using a pressure regulator, can reach a modulating ratio of 1:3.
Therefore, the burners are provided with an UV photocell to control the flame during the operation.

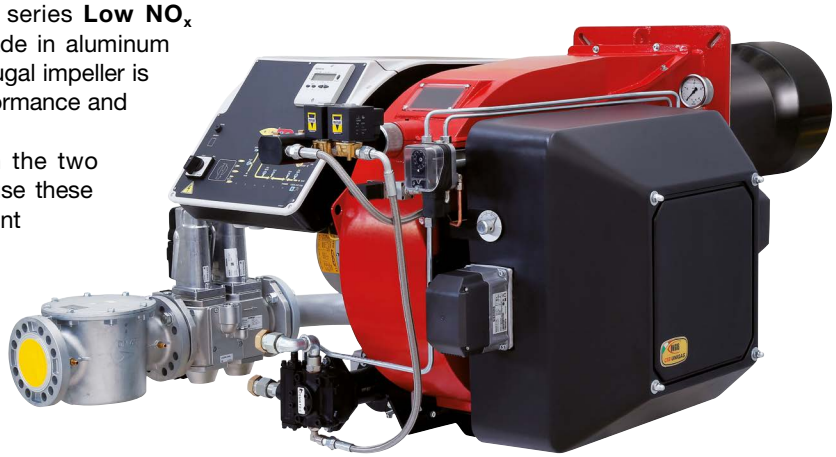

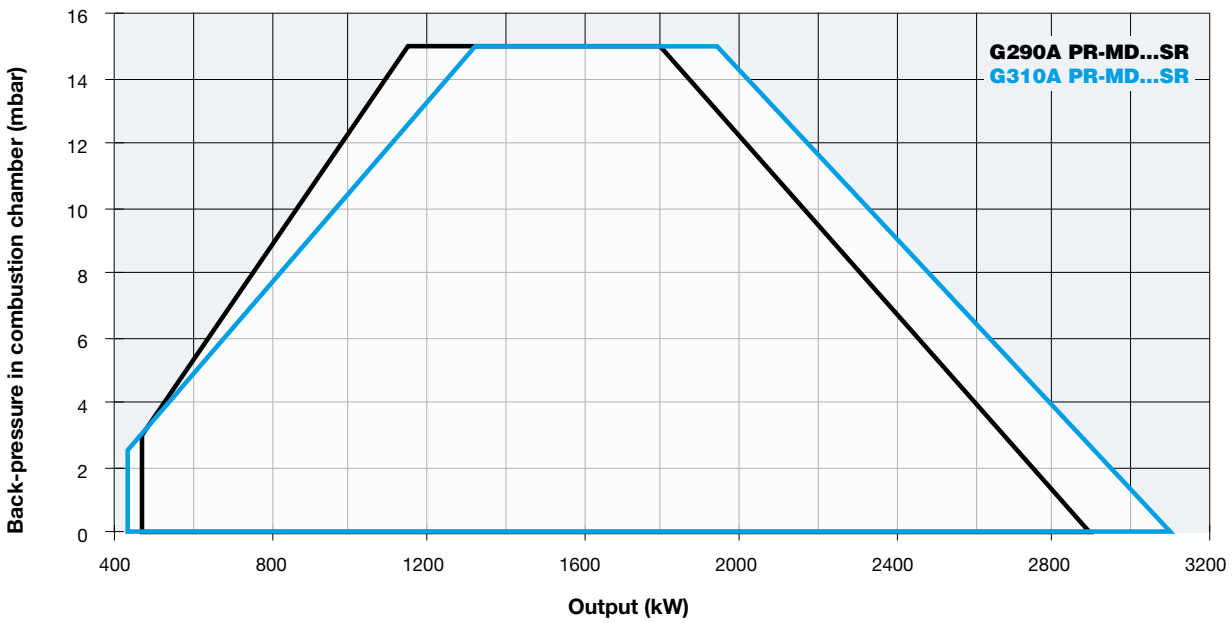

TECHNICAL DETAILS

Type	Model	Power kW		Auxiliary electrical power supply	Motor electrical power supply	Fan motor	Pump motor	Gas connections	Noise level
		min.	max.			kW	kW	Rp	dBA
G290A	MG.xx.SR.xx.A.1.xxx	470	2.900	230 V 1N AC 50 Hz	400 V 3 AC 50 Hz	3	1,1	2" - DN65 - DN80 - DN100	< 85
G310A	MG.xx.SR.xx.A.1.xxx	440	3.100	230 V 1N AC 50 Hz	400 V 3 AC 50 Hz	4	1,1	2" - DN65 - DN80 - DN100	< 85

For the configuration of the gas train, see pages 116-117.

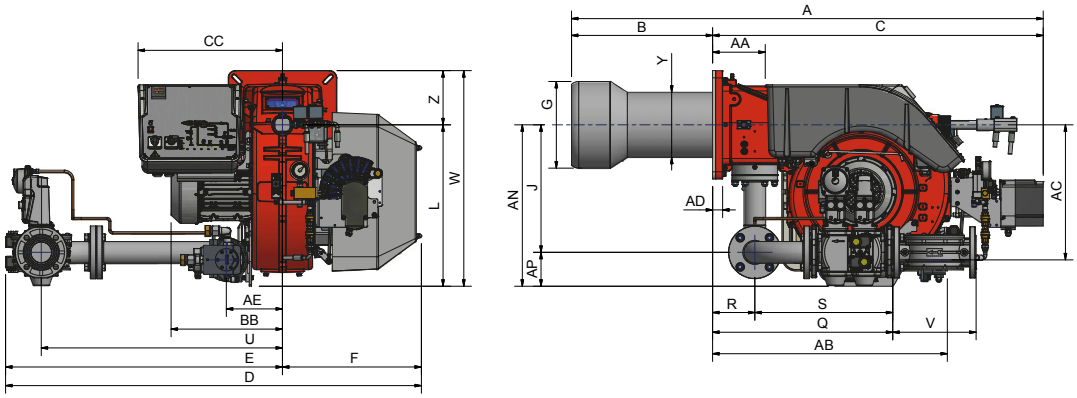

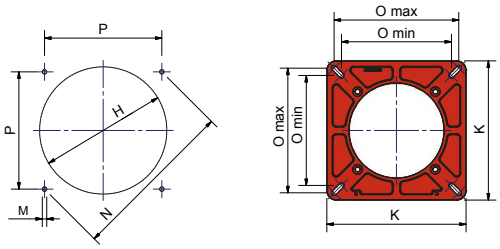

Suggested boiler drilling

Burner flange

Type	Packaging dimensions (mm)			
	l	p	h	kg
G290A	1680	1260	1260	325
G310A	1680	1260	1260	330

Approximate values (regarding model with gas train DN 80)

Type	Model	Overall dimensions (mm)																														
		A	AA	AB	AC	AD	AE	AN	AP	B	BB	C	CC	D	E	F	G	H	J	K	L	M	N	O min.	O max.	P	Q	R	S	U	V	W	Y	Z
G290A	MG.xx.SR.xx.A.1.50	1609	184	823	474	35	197	550	100	490	391	1159	531	1212	725	487	269	300	450	380	518	M12	453	300	340	320	533	149	384	624	190	708	228	190
G290A	MG.xx.SR.xx.A.1.65	1609	184	823	474	35	197	567	117	490	391	1159	531	1456	969	487	269	300	450	380	518	M12	453	300	340	320	636	149	487	845	292	708	228	190
G290A	MG.xx.SR.xx.A.1.80	1609	184	823	474	35	197	582	132	490	391	1159	531	1489	1002	487	269	300	450	380	518	M12	453	300	340	320	687	149	538	875	310	708	228	190
G290A	MG.xx.SR.xx.A.1.100	1609	184	823	474	35	197	595	145	490	391	1159	531	1569	1082	487	269	300	450	380	518	M12	453	300	340	320	791	149	642	942	353	708	228	190
G310A	MG.xx.SR.xx.A.1.50	1654	184	823	474	35	197	550	100	495	391	1159	531	1212	725	487	304	347	450	380	518	M12	453	300	340	320	533	149	384	624	190	708	228	190
G310A	MG.xx.SR.xx.A.1.65	1654	184	823	474	35	197	567	117	495	391	1159	531	1456	969	487	304	347	450	380	518	M12	453	300	340	320	636	149	487	845	292	708	228	190
G310A	MG.xx.SR.xx.A.1.80	1654	184	823	474	35	197	582	132	495	391	1159	531	1489	1002	487	304	347	450	380	518	M12	453	300	340	320	687	149	538	875	310	708	228	190
G310A	MG.xx.SR.xx.A.1.100	1654	184	823	474	35	197	595	145	495	391	1159	531	1569	1082	487	304	347	450	380	518	M12	453	300	340	320	791	149	642	942	353	708	228	190

MECHANICAL OPERATION

Model	Gas train	Operation	G290A...SR Code	G290A...SR Price €	G310A...SR Code	G310A...SR Price €
MG.PR.SR.xx.A.1.50	2"	PR	036070153		036070553	
MG.PR.SR.xx.A.1.65	DN65	PR	036070253		036070653	
MG.PR.SR.xx.A.1.80	DN80	PR	036070353		036070753	
MG.PR.SR.xx.A.1.100	DN100	PR	036070453		036070853	
MG.MD.SR.xx.A.1.50	2"	MD(*)	036070154		036070554	
MG.MD.SR.xx.A.1.65	DN65	MD(*)	036070254		036070654	
MG.MD.SR.xx.A.1.80	DN80	MD(*)	036070354		036070754	
MG.MD.SR.xx.A.1.100	DN100	MD(*)	036070454		036070854	

(*) In order for the supply to be completed, the burner must be equipped with the respective modulating probe (see accessory table, page 290).

In compliance with:
- **GAR Directive 2016/426/EU**
- **Low Tension Directive 2014/35/UE**
- **Electromagnetic Compatibility Directive 2014/30/UE**
- **Machinery Directive 2006/42/CE**

ELECTRONIC OPERATION

Model	Gas train	Operation	G290A...SR Code	G290A...SR Price €	G310A...SR Code	G310A...SR Price €
MG.PR.SR.xx.A.1.50.EC	2"	PR	03607015C		03607055C	
MG.PR.SR.xx.A.1.65.EC	DN65	PR	03607025C		03607065C	
MG.PR.SR.xx.A.1.80.EC	DN80	PR	03607035C		03607075C	
MG.PR.SR.xx.A.1.100.EC	DN100	PR	03607045C		03607085C	
MG.MD.SR.xx.A.1.50.EC	2"	MD(*)	03607015G		03607055G	
MG.MD.SR.xx.A.1.65.EC	DN65	MD(*)	03607025G		03607065G	
MG.MD.SR.xx.A.1.80.EC	DN80	MD(*)	03607035G		03607075G	
MG.MD.SR.xx.A.1.100.EC	DN100	MD(*)	03607045G		03607085G	
MG.MD.SR.xx.A.1.50.ES	2"	MD(*)	03607015S		03607055S	
MG.MD.SR.xx.A.1.65.ES	DN65	MD(*)	03607025S		03607065S	
MG.MD.SR.xx.A.1.80.ES	DN80	MD(*)	03607035S		03607075S	
MG.MD.SR.xx.A.1.100.ES	DN100	MD(*)	03607045S		03607085S	

(*) In order for the supply to be completed, the burner must be equipped with the respective modulating probe (see accessory table, page 290).

In compliance with:
- **GAR Directive 2016/426/EU**
- **Low Tension Directive 2014/35/UE**
- **Electromagnetic Compatibility Directive 2014/30/UE**
- **Machinery Directive 2006/42/CE**

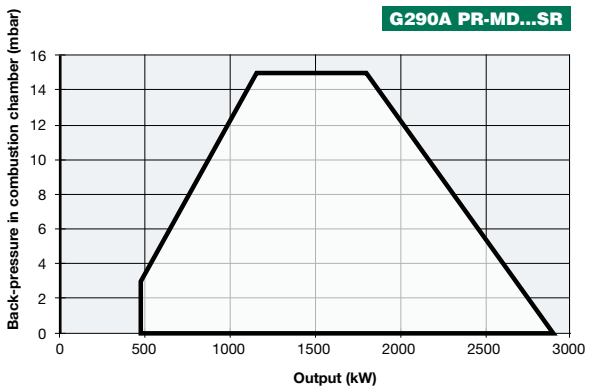

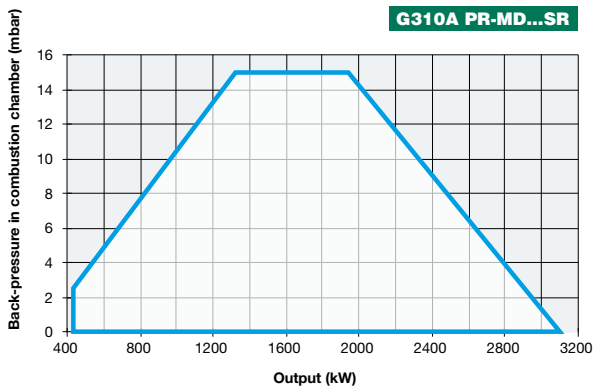

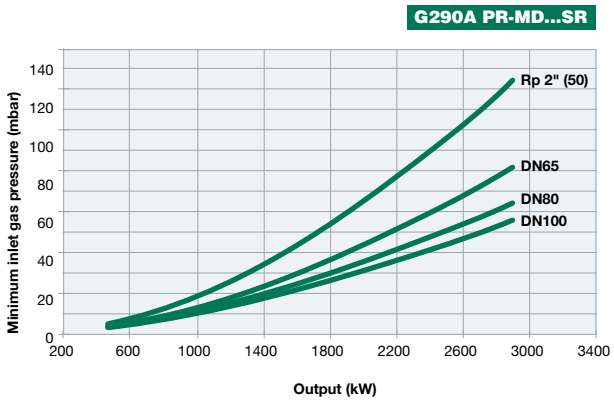

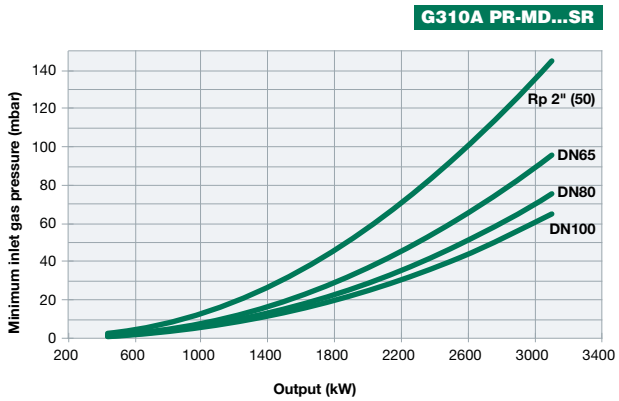

Attention: the graph shows the value of the gas output (kW) against the corresponding pressure without the combustion chamber back pressure. To know the minimum gas pressure at gas train, in order to get the gas output, it is necessary to add the boiler back pressure to the value read on the curve.

cinquecento SERIES H455A H630A H685A...SR

CIB UNIGAS < 120 mg/kWh CLASS 2 Low NOx

NEW

GAS/LIGHT OIL

The new standard H type CINQUECENTO series **Low NO_x** burners **Class 2 (< 120 mg/kWh)**, made in aluminum housing with a backward curved centrifugal impeller is studied and developed to get high performance and efficiency combined with low emissions.
In this manner these series can burn the two flues separately. This is possible because these burners are equipped with an independent electric motor for the activation of the oil pump. As a consequence during gas firing, the oil pump motor does not operate and remains off.
These burners are equipped with a high performance combustion head, designed to achieve an high irradiating flame when they run on natural gas. Instead, when they run on light oil, they are equipped with a by-pass nozzle which, using a pressure regulator, can reach a modulating ratio of 1:3.
Therefore, the burners are provided with an UV photocell to control the flame during the operation.

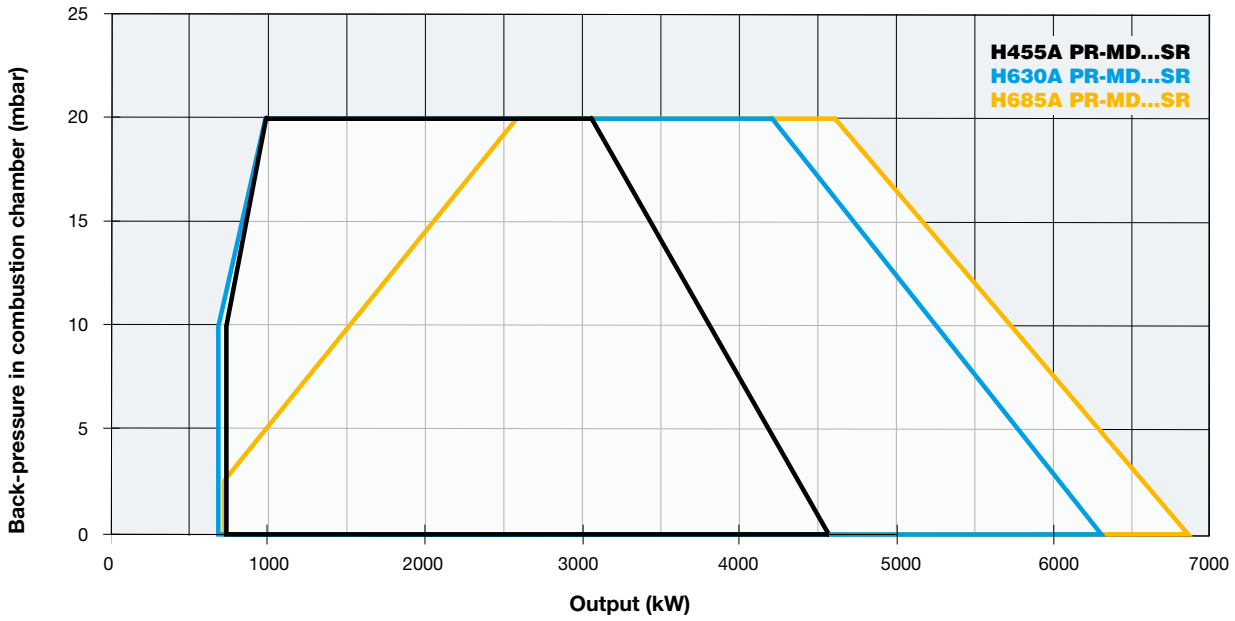

H455A H630A H685A...SR cinquecento SERIES

TECHNICAL DETAILS

Type	Model	Power kW		Auxiliary electrical power supply	Motor electrical power supply	Fan motor	Pump motor	Gas connections	Noise level
		min.	max.			kW	kW	Rp	dBA
H455A	MG.xx.SR.xx.A.1.xxx	750	4.550	230 V 1N AC 50 Hz	400 V 3 AC 50 Hz	7,5	1,1	2” - DN65 - DN80 - DN100	< 85
H630A	MG.xx.SR.xx.A.1.xxx	700	6.300	230 V 1N AC 50 Hz	400 V 3 AC 50 Hz	9,2	1,5	2” - DN65 - DN80 - DN100	< 85
H685A	MG.xx.SR.xx.A.1.xxx	740	6.850	230 V 1N AC 50 Hz	400 V 3 AC 50 Hz	9,2	1,5	2” - DN65 - DN80 - DN100	< 85

For the configuration of the gas train, see pages 116-117.

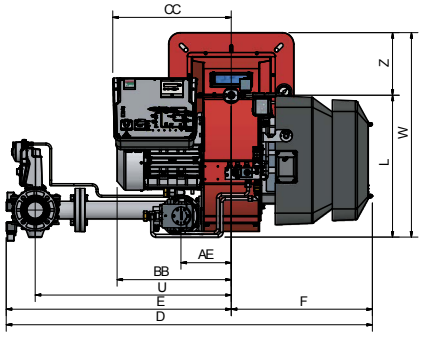

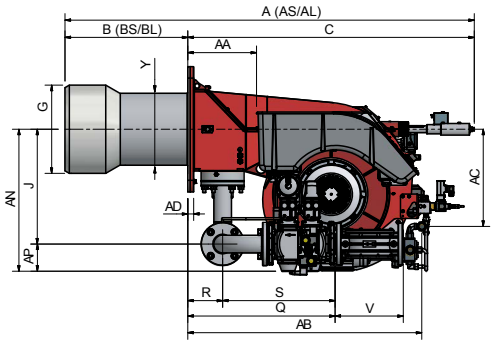

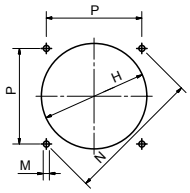

Suggested boiler drilling

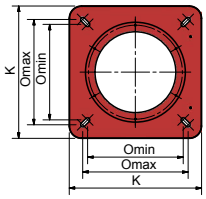

Burner flange

Type	Packaging dimensions (mm)			
	l	p	h	kg
H455A	1890	1290	1220	390
H630A	1890	1290	1220	420
H685A	1890	1290	1220	430

Approximate values (regarding model with gas train DN 80)

Type	Model	Overall dimensions (mm)																													
		AA	A	AD	AE	AN	AP	B	BB	C	CC	D	E	F	G	H	J	K	L	M	N	O		P	Q	R	S	U	V	W	Y	Z
																						min.	max.									
H455A	MG.xx.SR.xx.A.1.50	295	1747	25	210	595	100	495	471	1252	511	1554	946	608	304	350	494	540	586	M14	552	390	430	390	764	150	613	845	190	856	288	270
H455A	MG.xx.SR.xx.A.1.65	295	1747	25	210	611	117	495	471	1252	511	1577	969	608	304	350	494	540	586	M14	552	390	430	390	634	150	484	845	294	856	288	270
H455A	MG.xx.SR.xx.A.1.80	295	1747	25	210	626	132	495	471	1252	511	1610	1002	608	304	350	494	540	586	M14	552	390	430	390	686	150	535	875	313	856	288	270
H455A	MG.xx.SR.xx.A.1.100	295	1747	25	210	639	145	495	471	1252	511	1690	1082	608	304	350	494	540	586	M14	552	390	430	390	791	150	642	942	353	856	288	270
H630A	MG.xx.SR.xx.A.1.50	295	1749	25	210	595	100	530	488	1219	511	1554	946	608	340	380	494	540	586	M14	552	390	430	390	764	150	613	845	190	856	284	270
H630A	MG.xx.SR.xx.A.1.65	295	1749	25	210	611	117	530	488	1219	511	1577	969	608	340	380	494	540	586	M14	552	390	430	390	634	150	484	845	294	856	284	270
H630A	MG.xx.SR.xx.A.1.80	295	1749	25	210	626	132	530	488	1219	511	1610	1002	608	340	380	494	540	586	M14	552	390	430	390	686	150	535	875	313	856	284	270
H630A	MG.xx.SR.xx.A.1.100	295	1749	25	210	639	145	530	488	1219	511	1690	1082	608	340	380	494	540	586	M14	552	390	430	390	791	150	642	942	353	856	284	270
H685A	MG.xx.SR.xx.A.1.50	295	1764	25	217	595	100	530	488	1234	511	1554	946	608	380	430	494	540	586	M14	552	390	430	390	764	150	613	845	190	856	328	270
H685A	MG.xx.SR.xx.A.1.65	295	1764	25	217	611	117	530	488	1234	511	1577	969	608	380	430	494	540	586	M14	552	390	430	390	634	150	484	845	294	856	328	270
H685A	MG.xx.SR.xx.A.1.80	295	1764	25	217	626	132	530	488	1234	511	1610	1002	608	380	430	494	540	586	M14	552	390	430	390	686	150	535	875	313	856	328	270
H685A	MG.xx.SR.xx.A.1.100	295	1764	25	217	639	145	530	488	1234	511	1690	1082	608	380	430	494	540	586	M14	552	390	430	390	791	150	642	942	353	856	328	270

Approximate values

MECHANICAL OPERATION

Model	Gas train	Operation	H455A...SR Code	H455A...SR Price €	H630A...SR Code	H630A...SR Price €
MG.PR.SR.xx.A.1.50	2"	PR	035070153		035070553	
MG.PR.SR.xx.A.1.65	DN65	PR	035070253		035070653	
MG.PR.SR.xx.A.1.80	DN80	PR	035070353		035070753	
MG.PR.SR.xx.A.1.100	DN100	PR	035070453		035070853	
MG.MD.SR.xx.A.1.50	2"	MD(*)	035070154		035070554	
MG.MD.SR.xx.A.1.65	DN65	MD(*)	035070254		035070654	
MG.MD.SR.xx.A.1.80	DN80	MD(*)	035070354		035070754	
MG.MD.SR.xx.A.1.100	DN100	MD(*)	035070454		035070854	

Model	Gas train	Operation	H685A...SR Code	H685A...SR Price €
MG.PR.SR.xx.A.1.50	2"	PR	035070953	
MG.PR.SR.xx.A.1.65	DN65	PR	035071053	
MG.PR.SR.xx.A.1.80	DN80	PR	035071153	
MG.PR.SR.xx.A.1.100	DN100	PR	035071253	
MG.MD.SR.xx.A.1.50	2"	MD(*)	035070954	
MG.MD.SR.xx.A.1.65	DN65	MD(*)	035071054	
MG.MD.SR.xx.A.1.80	DN80	MD(*)	035071154	
MG.MD.SR.xx.A.1.100	DN100	MD(*)	035071254	

(*) In order for the supply to be completed, the burner must be equipped with the respective modulating probe (see accessory table, page 290).

In compliance with:
- **GAR Directive 2016/426/EU**
- **Low Tension Directive 2014/35/UE**
- **Electromagnetic Compatibility Directive 2014/30/UE**
- **Machinery Directive 2006/42/CE**

ELECTRONIC OPERATION

Model	Gas train	Operation	H455A...SR Code	H455A...SR Price €	H630A...SR Code	H630A...SR Price €
MG.PR.SR.xx.A.1.50.EC	2"	PR	03507015C		03507055C	
MG.PR.SR.xx.A.1.65.EC	DN65	PR	03507025C		03507065C	
MG.PR.SR.xx.A.1.80.EC	DN80	PR	03507035C		03507075C	
MG.PR.SR.xx.A.1.100.EC	DN100	PR	03507045C		03507085C	
MG.MD.SR.xx.A.1.50.EC	2"	MD(*)	03507015G		03507055G	
MG.MD.SR.xx.A.1.65.EC	DN65	MD(*)	03507025G		03507065G	
MG.MD.SR.xx.A.1.80.EC	DN80	MD(*)	03507035G		03507075G	
MG.MD.SR.xx.A.1.100.EC	DN100	MD(*)	03507045G		03507085G	
MG.MD.SR.xx.A.1.50.ES	2"	MD(*)	03507015S		03507055S	
MG.MD.SR.xx.A.1.65.ES	DN65	MD(*)	03507025S		03507065S	
MG.MD.SR.xx.A.1.80.ES	DN80	MD(*)	03507035S		03507075S	
MG.MD.SR.xx.A.1.100.ES	DN100	MD(*)	03507045S		03507085S	

Model	Gas train	Operation	H685A...SR Code	H685A...SR Price €
MG.PR.SR.xx.A.1.50.EC	2"	PR	03507095C	
MG.PR.SR.xx.A.1.65.EC	DN65	PR	03507105C	
MG.PR.SR.xx.A.1.80.EC	DN80	PR	03507115C	
MG.PR.SR.xx.A.1.100.EC	DN100	PR	03507125C	
MG.MD.SR.xx.A.1.50.EC	2"	MD(*)	03507095G	
MG.MD.SR.xx.A.1.65.EC	DN65	MD(*)	03507105G	
MG.MD.SR.xx.A.1.80.EC	DN80	MD(*)	03507115G	
MG.MD.SR.xx.A.1.100.EC	DN100	MD(*)	03507125G	
MG.MD.SR.xx.A.1.50.ES	2"	MD(*)	03507095S	
MG.MD.SR.xx.A.1.65.ES	DN65	MD(*)	03507105S	
MG.MD.SR.xx.A.1.80.ES	DN80	MD(*)	03507115S	
MG.MD.SR.xx.A.1.100.ES	DN100	MD(*)	03507125S	

(*) In order for the supply to be completed, the burner must be equipped with the respective modulating probe (see accessory table, page 290).

In compliance with:
- **GAR Directive 2016/426/EU**
- **Low Tension Directive 2014/35/UE**
- **Electromagnetic Compatibility Directive 2014/30/UE**
- **Machinery Directive 2006/42/CE**

H455A PR-MD...SR

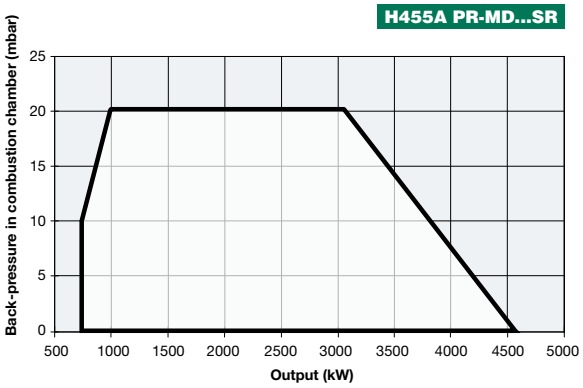

H630A PR-MD...SR

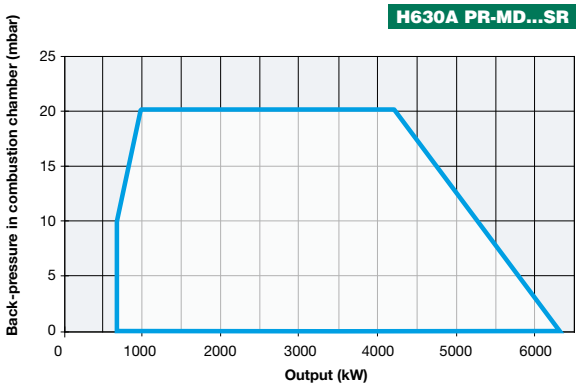

H685A PR-MD...SR

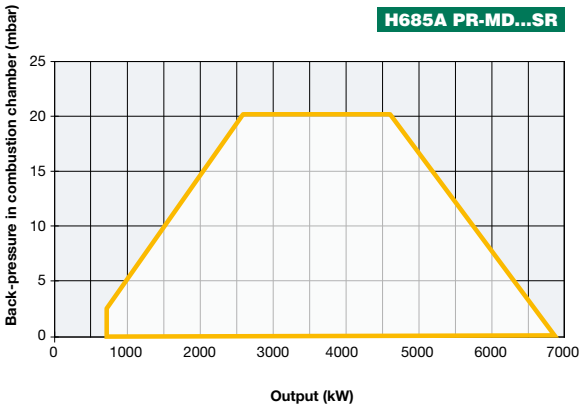

H455A PR-MD...SR

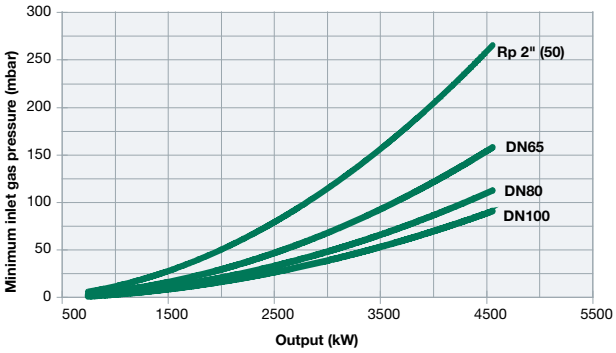

H630A PR-MD...SR

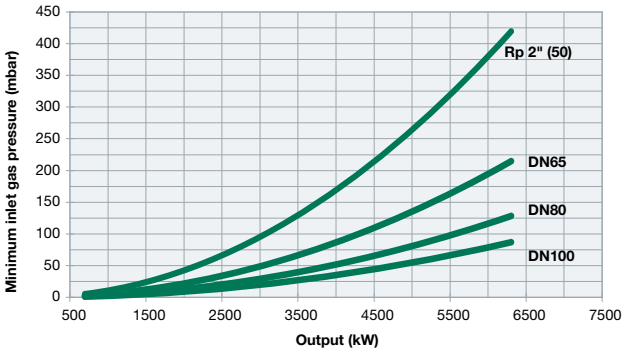

H685A PR-MD...SR

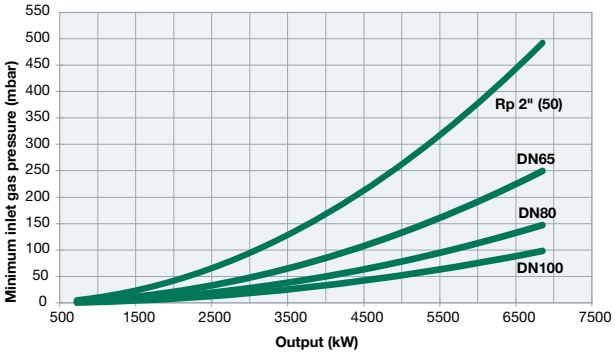

Attention: the graph shows the value of the gas output (kW) against the corresponding pressure without the combustion chamber back pressure. To know the minimum gas pressure at gas train, in order to get the gas output, it is necessary to add the boiler back pressure to the value read on the curve.

HR512A HR515A HR520A HR525A

cinquecento SERIES

The CINQUECENTO series, available in both progressive and modulating operations, represents the culmination of our experience in the field of medium-large capacity burners (up to 8.000 kW).
Like all the other dual fuels models, this series perfectly combine the mechanical devices and systems typical of gas burners with the ones of light oil burners. In this manner these series can burn the two flues separately.
This is possible because these burners are equipped with an independent electric motor for the activation of the oil pump.
As a consequence during gas firing, the oil pump motor does not operate and remains off.
These burners are equipped with a high performance combustion head, designed to achieve an high irradiating flame when they run on natural gas. Instead, when they run on light oil, they are equipped with a by-pass nozzle which, using a pressure regulator, can reach a modulating ratio of 1:3.
The control panel facia is printed with a mimic diagram fitted with neon lamps to indicate the different stages of burners operation and any abnormalities. Therefore, the burners are provided with an UV photocell to control the flame during the operation.

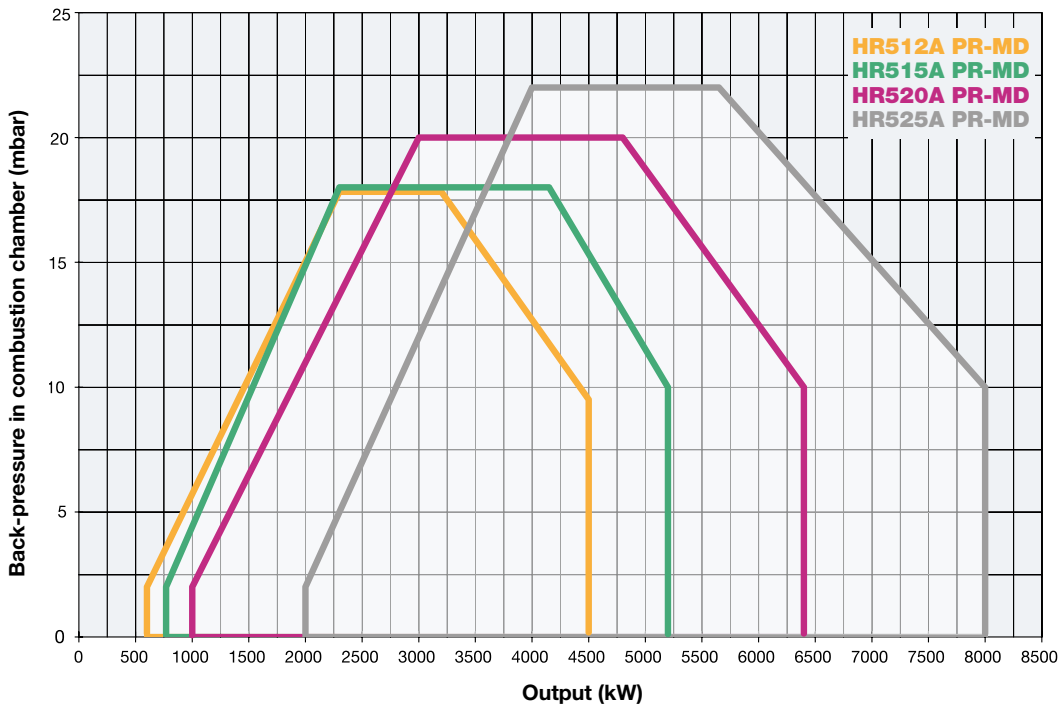

HR512A HR515A HR520A HR525A

GAS/LIGHT OIL

TECHNICAL DETAILS

Type	Model	Power kW		Auxiliary electrical power supply	Motor electrical power supply	Fan motor	Pump motor	Gas connections	Noise level
		min.	max.			kW	kW	Rp	dBA
HR512A	MG.xx.S.xx.A.1.xxx	600	4.500	230 V 1N AC 50 Hz	400 V 3 AC 50 Hz	9,2	1,1	2” - DN65 - DN80 - DN100	81,7
HR515A	MG.xx.S.xx.A.1.xxx	770	5.200	230 V 1N AC 50 Hz	400 V 3 AC 50 Hz	11,0	1,5	2” - DN65 - DN80 - DN100	82,3
HR520A	MG.xx.S.xx.A.1.xxx	1.000	6.400	230 V 1N AC 50 Hz	400 V 3 AC 50 Hz	15,0	1,5	2” - DN65 - DN80 - DN100	83,2
HR525A	MG.xx.S.xx.A.1.xxx	2.000	8.000	230 V 1N AC 50 Hz	400 V 3 AC 50 Hz	18,5	3,0	DN65 - DN80 - DN100 A	84,9

For the configuration of the gas train, see pages 116-117.

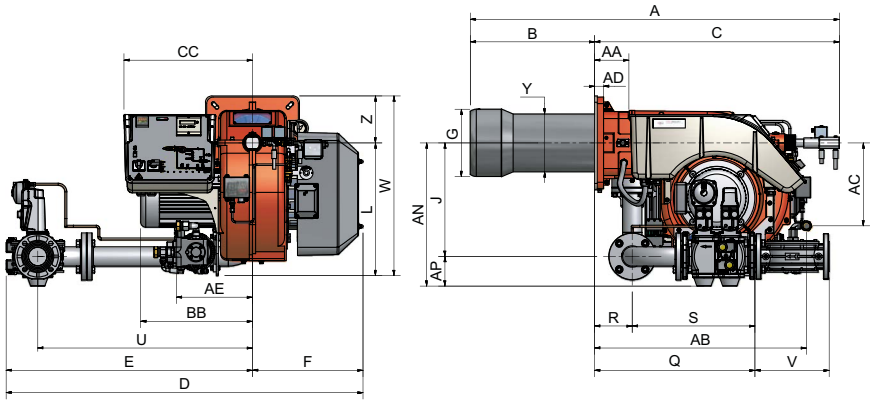

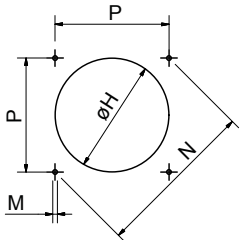

Suggested boiler drilling

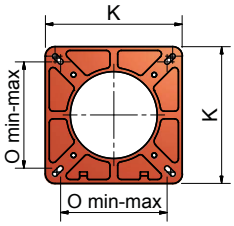

Burner flange

Type	Packaging dimensions (mm)			
	l	p	h	kg
HR512A	1.730	1.430	1.130	340
HR515A	1.730	1.430	1.130	360
HR520A	1.730	1.430	1130	375
HR525A	1.800	1.500	1.300	400

Approximate values

Type	Model	Overall dimensions (mm)																															
		A	AA	AB	AC	AD	AE	AN	B	BB	C	CC	D	E	F	G	H	J	K	L	M	N	O	P	Q	R	S	U	V	W	Y	Z
HR512A	MG.xx.S.xx.A.1.50	1669	220	924	364	35	348	595	530	517	1139	532	1590	946	644	340	380	494	540	494	M14	552	390	390	763	149	614	845	190	830	328	270
HR512A	MG.xx.S.xx.A.1.65	1669	220	924	364	35	348	611	530	517	1139	532	1613	969	644	340	380	494	540	494	M14	552	390	390	636	149	487	845	292	830	328	270
HR512A	MG.xx.S.xx.A.1.80	1669	220	924	364	35	348	626	530	517	1139	532	1645	1002	644	340	380	494	540	494	M14	552	390	390	687	149	538	875	313	830	328	270
HR512A	MG.xx.S.xx.A.1.100	1669	220	924	364	35	348	639	530	517	1139	532	1726	1082	644	340	380	494	540	494	M14	552	390	390	791	149	642	942	353	830	328	270
HR515A	MG.xx.S.xx.A.1.50	1669	220	928	371	35	348	595	530	517	1139	532	1590	946	644	380	420	494	540	494	M14	552	390	390	763	149	614	845	190	830	328	270
HR515A	MG.xx.S.xx.A.1.65	1669	220	928	371	35	348	611	530	517	1139	532	1613	969	644	380	420	494	540	494	M14	552	390	390	636	149	487	845	292	830	328	270
HR515A	MG.xx.S.xx.A.1.80	1669	220	928	371	35	348	626	530	517	1139	532	1645	1002	644	380	420	494	540	494	M14	552	390	390	687	149	538	875	313	830	328	270
HR515A	MG.xx.S.xx.A.1.100	1669	220	928	371	35	348	639	530	517	1141	532	1726	1082	644	380	420	494	540	494	M14	552	390	390	791	149	642	942	353	830	328	270
HR520A	MG.xx.S.xx.A.1.50	1671	220	928	371	35	348	595	530	517	1141	532	1590	946	644	400	450	494	540	494	M14	552	390	390	763	149	614	845	190	830	328	270
HR520A	MG.xx.S.xx.A.1.65	1671	220	928	371	35	348	611	530	517	1141	532	1613	969	644	400	450	494	540	494	M14	552	390	390	636	149	487	845	292	830	328	270
HR520A	MG.xx.S.xx.A.1.80	1671	220	928	371	35	348	626	530	517	1141	532	1645	1002	644	400	450	494	540	494	M14	552	390	390	687	149	538	875	313	830	328	270
HR520A	MG.xx.S.xx.A.1.100	1671	220	928	371	35	348	639	530	517	1141	532	1726	1082	644	400	450	494	540	494	M14	552	390	390	791	149	642	942	353	830	328	270
HR525A	MG.xx.S.xx.A.1.65	1671	220	928	580	35	348	611	530	650	1141	650	1613	969	644	434	484	494	540	494	M14	552	390	390	636	149	487	845	292	874	328	270
HR525A	MG.xx.S.xx.A.1.80	1671	220	884	580	35	348	626	530	650	1141	650	1645	1002	644	434	484	494	540	494	M14	552	390	390	687	149	538	875	313	874	328	270
HR525A	MG.xx.S.xx.A.1.100	1671	220	884	580	35	348	639	530	650	1141	650	1726	1082	644	434	484	494	540	494	M14	552	390	390	792	149	642	942	353	874	328	270

Approximate values

HR512A HR515A HR520A HR525A

MECHANICAL OPERATION

Model	Gas train	Operation	HR512A Code	HR512A Price €	HR515A Code	HR515A Price €
MG.PR.S.xx.A.1.50	2”	PR	029070153		029070553	
MG.PR.S.xx.A.1.65	DN65	PR	029070253		029070653	
MG.PR.S.xx.A.1.80	DN80	PR	029070353		029070753	
MG.PR.S.xx.A.1.100	DN100	PR	029070453		029070853	
MG.MD.S.xx.A.1.50	2”	MD(*)	029070154		029070554	
MG.MD.S.xx.A.1.65	DN65	MD(*)	029070254		029070654	
MG.MD.S.xx.A.1.80	DN80	MD(*)	029070354		029070754	
MG.MD.S.xx.A.1.100	DN100	MD(*)	029070454		029070854	

Model	Gas train	Operation	HR520A Code	HR520A Price €	HR525A Code	HR525A Price €
MG.PR.S.xx.A.1.50	2”	PR	029070953		-	
MG.PR.S.xx.A.1.65	DN65	PR	029071053		029071453	
MG.PR.S.xx.A.1.80	DN80	PR	029071153		029071553	
MG.PR.S.xx.A.1.100	DN100	PR	029071253		029071653	
MG.MD.S.xx.A.1.50	2”	MD(*)	029070954		-	
MG.MD.S.xx.A.1.65	DN65	MD(*)	029071054		029071454	
MG.MD.S.xx.A.1.80	DN80	MD(*)	029071154		029071554	
MG.MD.S.xx.A.1.100	DN100	MD(*)	029071254		029071654	

(*) In order for the supply to be completed, the burner must be equipped with the respective modulating probe (see accessory table, page 290).

In compliance with:
- **GAR Directive 2016/426/EU**
- **Low Tension Directive 2014/35/UE**
- **Electromagnetic Compatibility Directive 2014/30/UE**
- **Machinery Directive 2006/42/CE**

HR512A HR515A HR520A HR525A

GAS/LIGHT OIL

ELECTRONIC OPERATION

Model	Gas train	Operation	HR512A Code	HR512A Price €	HR515A Code	HR515A Price €
MG.PR.S.xx.A.1.50.EC	2”	PR	02907015C		02907055C	
MG.PR.S.xx.A.1.65.EC	DN65	PR	02907025C		02907065C	
MG.PR.S.xx.A.1.80.EC	DN80	PR	02907035C		02907075C	
MG.PR.S.xx.A.1.100.EC	DN100	PR	02907045C		02907085C	
MG.MD.S.xx.A.1.50.EC	2”	MD(*)	02907015G		02907055G	
MG.MD.S.xx.A.1.65.EC	DN65	MD(*)	02907025G		02907065G	
MG.MD.S.xx.A.1.80.EC	DN80	MD(*)	02907035G		02907075G	
MG.MD.S.xx.A.1.100.EC	DN100	MD(*)	02907045G		02907085G	
MG.MD.S.xx.A.1.50.ES	2”	MD(*)	02907015S		02907055S	
MG.MD.S.xx.A.1.65.ES	DN65	MD(*)	02907025S		02907065S	
MG.MD.S.xx.A.1.80.ES	DN80	MD(*)	02907035S		02907075S	
MG.MD.S.xx.A.1.100.ES	DN100	MD(*)	02907045S		02907085S	

Model	Gas train	Operation	HR520A Code	HR520A Price €	HR525A Code	HR525A Price €
MG.PR.S.xx.A.1.50.EC	2”	PR	02907095C		-	
MG.PR.S.xx.A.1.65.EC	DN65	PR	02907105C		02907145C	
MG.PR.S.xx.A.1.80.EC	DN80	PR	02907115C		02907155C	
MG.PR.S.xx.A.1.100.EC	DN100	PR	02907125C		02907165C	
MG.MD.S.xx.A.1.50.EC	2”	MD(*)	02907095G		-	
MG.MD.S.xx.A.1.65.EC	DN65	MD(*)	02907105G		02907145G	
MG.MD.S.xx.A.1.80.EC	DN80	MD(*)	02907115G		02907155G	
MG.MD.S.xx.A.1.100.EC	DN100	MD(*)	02907125G		02907165G	
MG.MD.S.xx.A.1.50.ES	2”	MD(*)	02907095S		-	
MG.MD.S.xx.A.1.65.ES	DN65	MD(*)	02907105S		02907145S	
MG.MD.S.xx.A.1.80.ES	DN80	MD(*)	02907115S		02907155S	
MG.MD.S.xx.A.1.100.ES	DN100	MD(*)	02907125S		02907165S	

(*) In order for the supply to be completed, the burner must be equipped with the respective modulating probe (see accessory table, page 290).

In compliance with:
- **GAR Directive 2016/426/EU**
- **Low Tension Directive 2014/35/UE**
- **Electromagnetic Compatibility Directive 2014/30/UE**
- **Machinery Directive 2006/42/CE**

HR512A HR515A HR520A HR525A

HR512A PR-MD

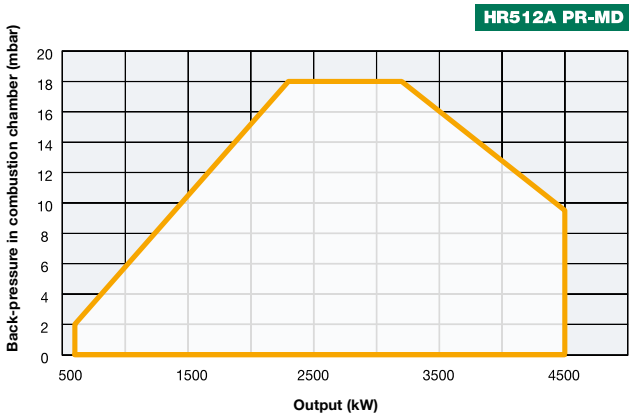

HR515A PR-MD

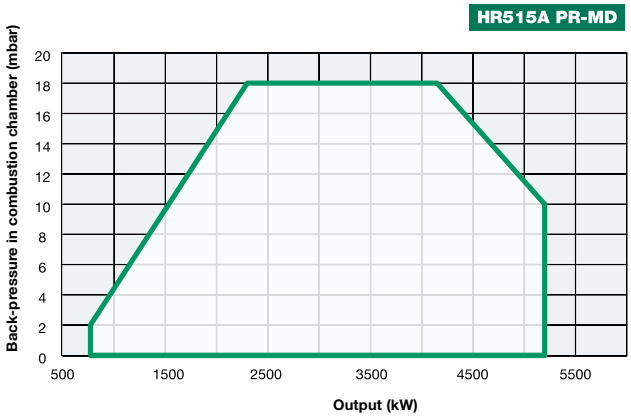

HR520A PR-MD

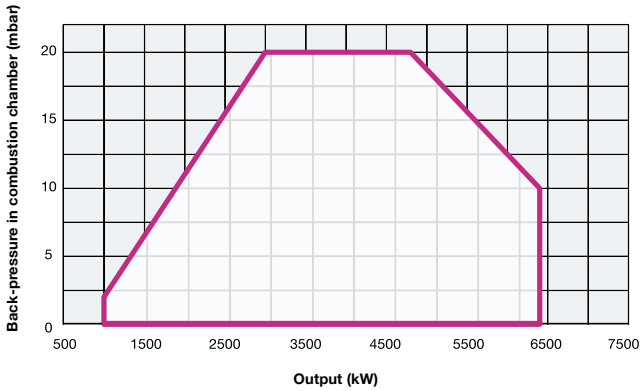

HR525A PR-MD

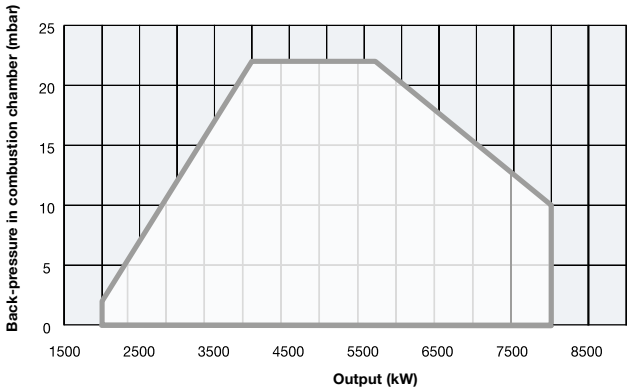

HR512A PR-MD

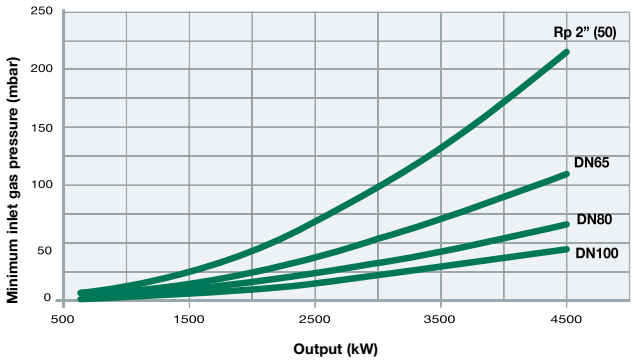

HR515A PR-MD

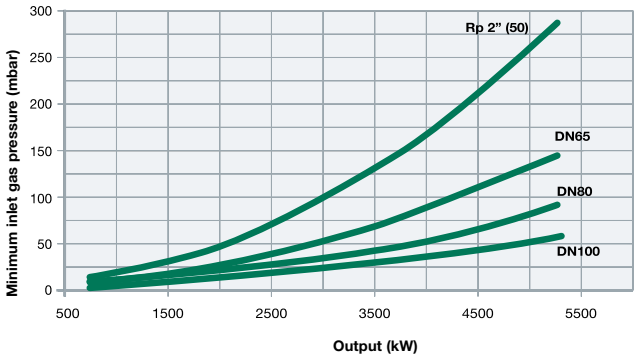

HR520A PR-MD

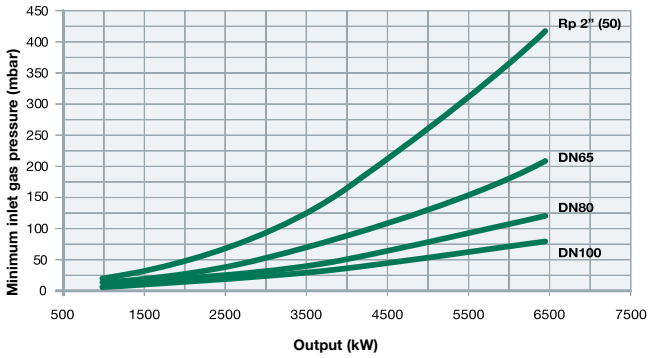

HR525A PR-MD

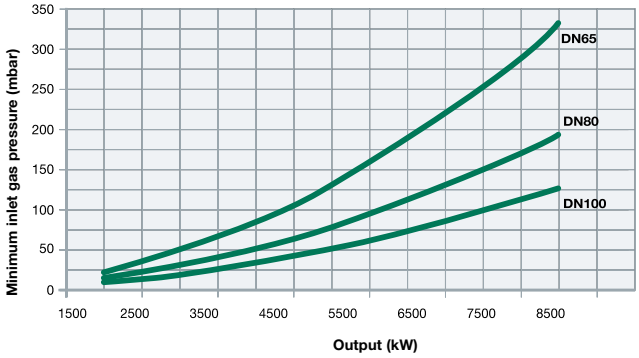

Attention: the graph shows the value of the gas output (kW) against the corresponding pressure without the combustion chamber back pressure. To know the minimum gas pressure at gas train, in order to get the gas output, it is necessary to add the boiler back pressure to the value read on the curve.

cinquecento SERIES K750A K890A K990A...SR

GAS/LIGHT OIL

NEW

The new standard K type CINQUECENTO series **Low NO_x** burners **Class 2 (< 120 mg/kWh)**, made in aluminum housing with a backward curved centrifugal impeller is studied and developed to get high performance and efficiency combined with low emissions.

In this manner these series can burn the two flues separately. This is possible because these burners are equipped with an independent electric motor for the activation of the oil pump. As a consequence during gas firing, the oil pump motor does not operate and remains off.

These burners are equipped with a high performance combustion head, designed to achieve an high irradiating flame when they run on natural gas. Instead, when they run on light oil, they are equipped with a by-pass nozzle which, using a pressure regulator, can reach a modulating ratio of 1:3.

Therefore, the burners are provided with an UV photocell to control the flame during the operation.

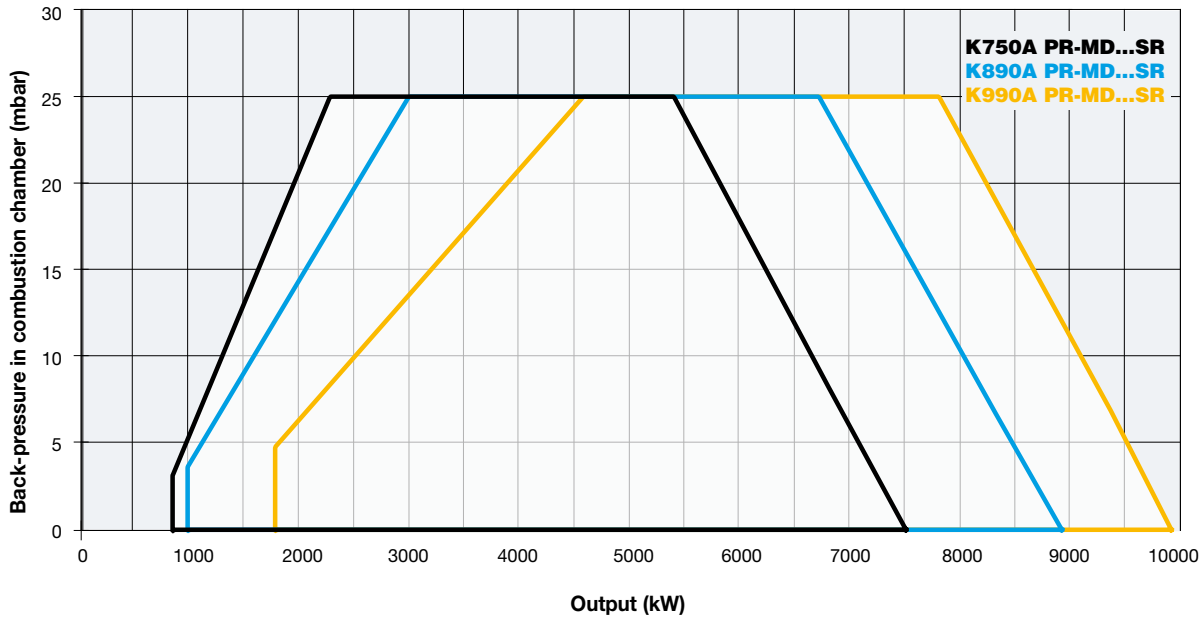

K750A K890A K990A...SR cinquecento SERIES

TECHNICAL DETAILS

Type	Model	Power kW		Auxiliary electrical power supply	Motor electrical power supply	Fan motor	Pump motor	Gas connections	Noise level
		min.	max.			kW	kW		dBA
K750A	MG.xx.SR.xx.A.1.xxx	880	7.500	230 V 1N AC 50 Hz	400 V 3 AC 50 Hz	15,0	2,2	DN65 - DN80 - DN100 - DN125	< 85
K890A	MG.xx.SR.xx.A.1.xxx	1.000	8.900	230 V 1N AC 50 Hz	400 V 3 AC 50 Hz	15,0	3	DN65 - DN80 - DN100 - DN125	< 85
K990A	MG.xx.SR.xx.A.1.xxx	1.820	9.900	230 V 1N AC 50 Hz	400 V 3 AC 50 Hz	15,0	4	DN80 - DN100 - DN125	< 85

For the configuration of the gas train, see pages 116-117.

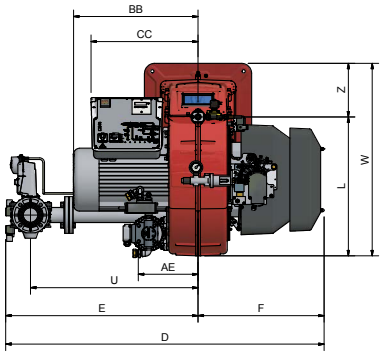

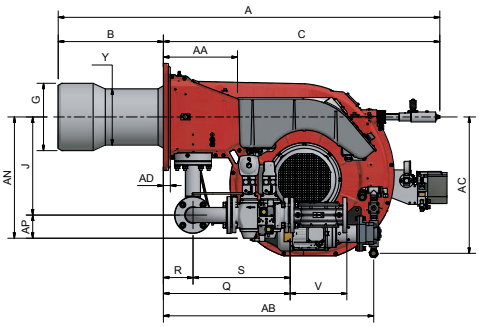

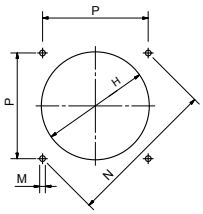

Suggested boiler drilling

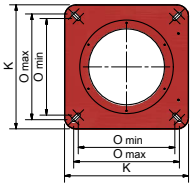

Burner flange

Type	Packaging dimensions (mm)			
	l	p	h	kg
K750A	2180	1450	1220	520
K890A	2180	1450	1220	530
K990A	2180	1450	1220	540

Approximate values (regarding model with gas train DN 80)

Type	Model	Overall dimensions (mm)																															
		A	AA	AB	AC	AD	AE	AN	AP	B	BB	C	CC	D	E	F	G	H	J	K	L	M	N	O		P	Q	R	S	U	V	W	Y	Z
																								min.	max.									
K750A	MG.xx.SR.xx.A.1.65	1745	366	1073	670	25	300	611	117	530	626	1215	524	1595	969	626	340	380	494	540	690	M16	651	420	460	460	637	150	487	845	292	960	328	270
K750A	MG.xx.SR.xx.A.1.80	1745	366	1073	670	25	300	626	132	530	626	1215	524	1628	1002	626	340	380	494	540	690	M16	651	420	460	460	688	150	538	875	313	960	328	270
K750A	MG.xx.SR.xx.A.1.100	1745	366	1073	670	25	300	639	145	530	626	1215	524	1708	1082	626	340	380	494	540	690	M16	651	420	460	460	792	150	642	942	353	960	328	270
K750A	MG.xx.SR.xx.A.1.125	1745	366	1073	670	25	300	737	175	530	626	1215	524	1973	1347	626	340	380	562	540	690	M16	651	420	460	460	904	150	754	1192	479	960	328	270
K890A	MG.xx.SR.xx.A.1.65	1745	366	1073	670	25	300	611	117	530	626	1215	524	1595	969	626	400	440	494	540	690	M16	651	420	460	460	637	150	487	845	292	960	328	270
K890A	MG.xx.SR.xx.A.1.80	1745	366	1073	670	25	300	626	132	530	626	1215	524	1628	1002	626	400	440	494	540	690	M16	651	420	460	460	688	150	538	875	313	960	328	270
K890A	MG.xx.SR.xx.A.1.100	1745	366	1073	670	25	300	639	145	530	626	1215	524	1708	1082	626	400	440	494	540	690	M16	651	420	460	460	792	150	642	942	353	960	328	270
K890A	MG.xx.SR.xx.A.1.125	1745	366	1073	670	25	300	737	175	530	626	1215	524	1973	1347	626	400	440	562	540	690	M16	651	420	460	460	904	150	754	1192	479	960	328	270
K990A	MG.xx.SR.xx.A.1.80	1745	366	1073	670	25	300	626	132	530	626	1215	524	1628	1002	626	434	484	494	540	690	M16	651	420	460	460	688	150	538	875	313	960	328	270
K990A	MG.xx.SR.xx.A.1.100	1745	366	1073	670	25	300	639	145	530	626	1215	524	1708	1082	626	434	484	494	540	690	M16	651	420	460	460	792	150	642	942	353	960	328	270
K990A	MG.xx.SR.xx.A.1.125	1745	366	1073	670	25	300	737	175	530	626	1215	524	1973	1347	626	434	484	562	540	690	M16	651	420	460	460	904	150	754	1192	479	960	328	270

Approximate values

MECHANICAL OPERATION

Model	Gas train	Operation	K750A...SR Code	K750A...SR Price €	K890A...SR Code	K890A...SR Price €
MG.PR.SR.xx.A.1.65	DN65	PR	034070153		034070553	
MG.PR.SR.xx.A.1.80	DN80	PR	034070253		034070653	
MG.PR.SR.xx.A.1.100	DN100	PR	034070353		034070753	
MG.PR.SR.xx.A.1.125	DN 125	PR	034070453		034070853	
MG.MD.SR.xx.A.1.65	DN65	MD(*)	034070154		034070554	
MG.MD.SR.xx.A.1.80	DN80	MD(*)	034070254		034070654	
MG.MD.SR.xx.A.1.100	DN100	MD(*)	034070354		034070754	
MG.MD.SR.xx.A.1.125	DN 125	MD(*)	034070454		034070854	

Model	Gas train	Operation	K990A...SR Code	K990A...SR Price €
MG.PR.SR.xx.A.1.80	DN80	PR	034070953	
MG.PR.SR.xx.A.1.100	DN100	PR	034071053	
MG.PR.SR.xx.A.1.125	DN 125	PR	034071153	
MG.MD.SR.xx.A.1.80	DN80	MD(*)	034070954	
MG.MD.SR.xx.A.1.100	DN100	MD(*)	034071054	
MG.MD.SR.xx.A.1.125	DN 125	MD(*)	034071154	

(*) In order for the supply to be completed, the burner must be equipped with the respective modulating probe (see accessory table, page 290).

In compliance with:
- **GAR Directive 2016/426/EU**
- **Low Tension Directive 2014/35/UE**
- **Electromagnetic Compatibility Directive 2014/30/UE**
- **Machinery Directive 2006/42/CE**

ELECTRONIC OPERATION

Model	Gas train	Operation	K750A...SR Code	K750A...SR Price €	K890A...SR Code	K890A...SR Price €
MG.PR.SR.xx.A.1.65.EC	DN65	PR	03407015C		03407055C	
MG.PR.SR.xx.A.1.80.EC	DN80	PR	03407025C		03407065C	
MG.PR.SR.xx.A.1.100.EC	DN100	PR	03407035C		03407075C	
MG.PR.SR.xx.A.1.125.EC	DN125	PR	03407045C		03407085C	
MG.MD.SR.xx.A.1.65.EC	DN65	MD(*)	03407015G		03407055G	
MG.MD.SR.xx.A.1.80.EC	DN80	MD(*)	03407025G		03407065G	
MG.MD.SR.xx.A.1.100.EC	DN100	MD(*)	03407035G		03407075G	
MG.MD.SR.xx.A.1.125.EC	DN 125	MD(*)	03407045G		03407085G	
MG.MD.SR.xx.A.1.65.ES	DN65	MD(*)	03407015S		03407055S	
MG.MD.SR.xx.A.1.80.ES	DN80	MD(*)	03407025S		03407065S	
MG.MD.SR.xx.A.1.100.ES	DN100	MD(*)	03407035S		03407075S	
MG.MD.SR.xx.A.1.125.ES	DN 125	MD(*)	03407045S		03407085S	

Model	Gas train	Operation	K990A...SR Code	K990A...SR Price €
MG.PR.SR.xx.A.1.80.EC	DN80	PR	03407095C	
MG.PR.SR.xx.A.1.100.EC	DN100	PR	03407105C	
MG.PR.SR.xx.A.1.125.EC	DN125	PR	03407115C	
MG.MD.SR.xx.A.1.80.EC	DN80	MD(*)	03407095G	
MG.MD.SR.xx.A.1.100.EC	DN100	MD(*)	03407105G	
MG.MD.SR.xx.A.1.125.EC	DN 125	MD(*)	03407115G	
MG.MD.SR.xx.A.1.80.ES	DN80	MD(*)	03407095S	
MG.MD.SR.xx.A.1.100.ES	DN100	MD(*)	03407105S	
MG.MD.SR.xx.A.1.125.ES	DN 125	MD(*)	03407115S	

(*) In order for the supply to be completed, the burner must be equipped with the respective modulating probe (see accessory table, page 290).

In compliance with:
- **GAR Directive 2016/426/EU**
- **Low Tension Directive 2014/35/UE**
- **Electromagnetic Compatibility Directive 2014/30/UE**
- **Machinery Directive 2006/42/CE**

K750A PR-MD...SR

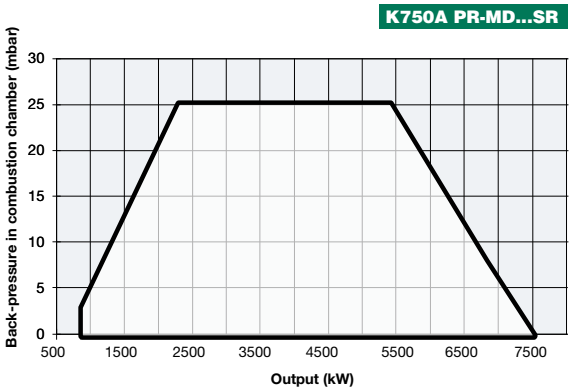

K890A PR-MD...SR

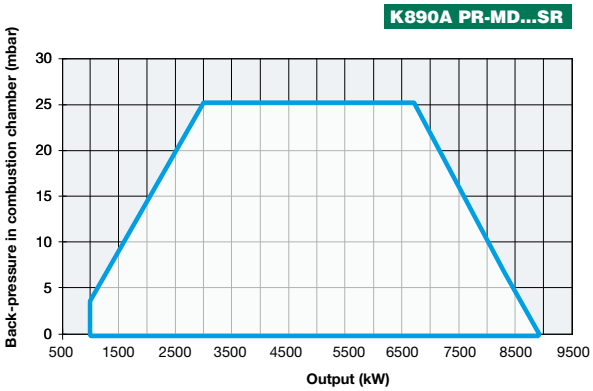

K990A PR-MD...SR

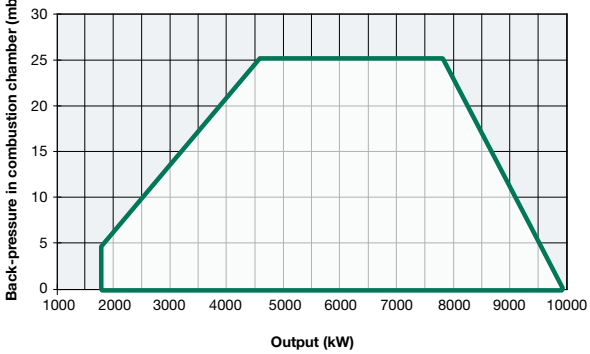

K750A PR-MD...SR

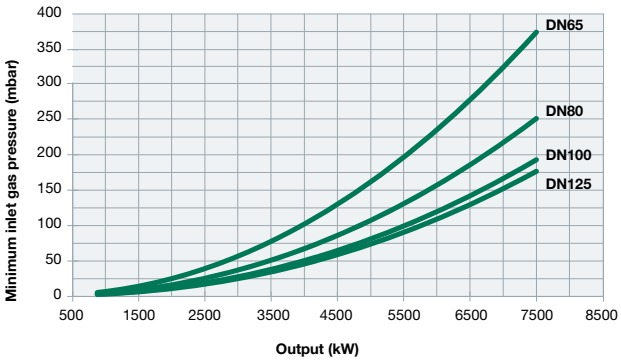

K890A PR-MD...SR

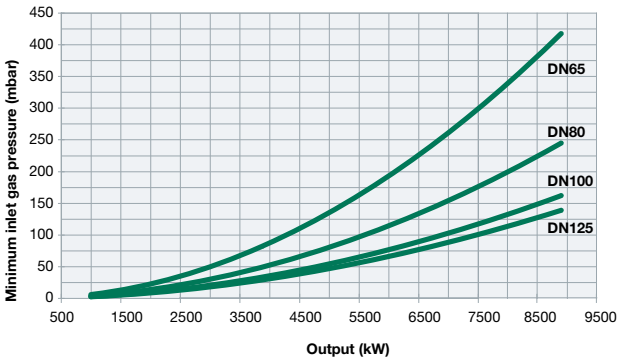

K990A PR-MD...SR

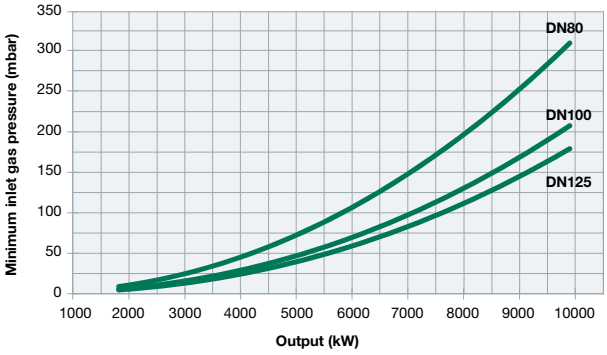

Attention: the graph shows the value of the gas output (kW) against the corresponding pressure without the combustion chamber back pressure. To know the minimum gas pressure at gas train, in order to get the gas output, it is necessary to add the boiler back pressure to the value read on the curve.

HR1025 HR1030 HR1040 mille SERIES

These burners are made of a solid aluminium housing and are suitable both for industrial applications, big heating plants and public users (hospitals, universities, etc.). The possibility of using both flues separately, the manageability and the easy maintenance, notwithstanding its big dimensions, make this series of burners really special.
These burners may be produced both in the version of progressive and modulating operation.
Upon request they can be customized through an electronic control system which controls the O_2 flow at any stages, optimizing the efficiency, and through a control panel in form of either remote console type, cabinet type or wall mounted type.

Electronic set up (optional)

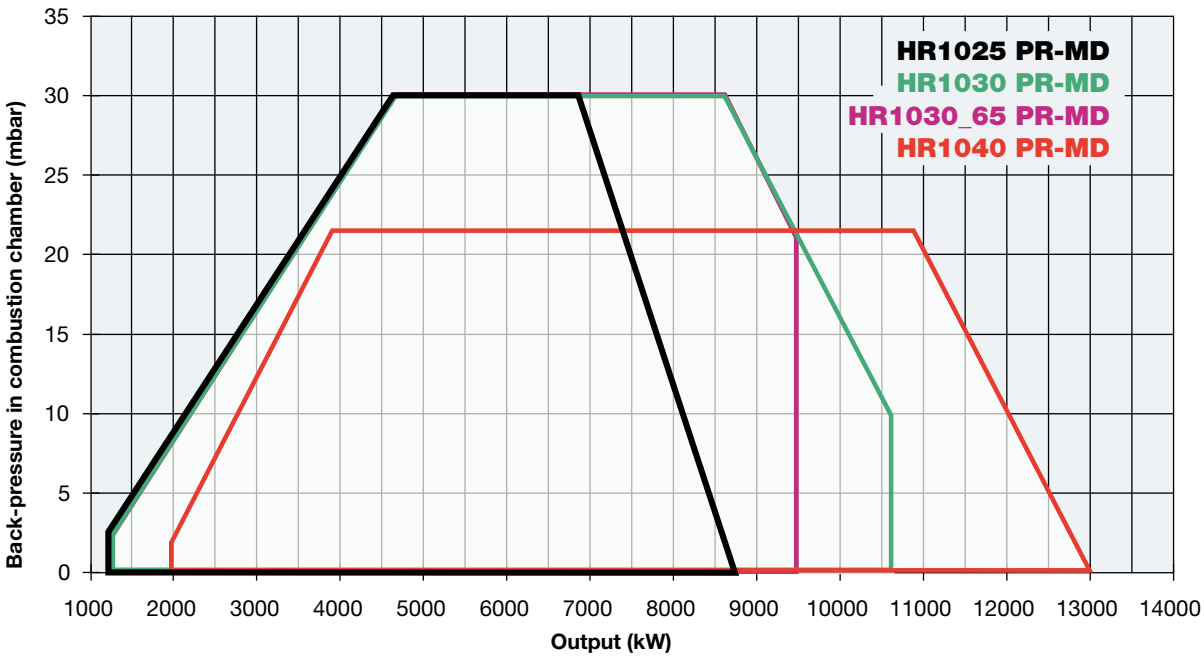

HR1025 HR1030 HR1040

GAS/LIGHT OIL

TECHNICAL DETAILS

Type	Model	Power kW		Auxiliary electrical power supply	Motor electrical power supply	Fan motor	Pump motor	Gas connections	Noise level
		min.	max.			kW	kW		dBA
HR1025	MG.xx.S.xx.A.1.xxx	1.200	8.700	230 V 1N AC 50 Hz	400 V 3 AC 50 Hz	18,5	4,0	DN 65 - DN80 - DN100	82,2
HR1030	MG.xx.S.xx.A.1.65	1.200	9.500	230 V 1N AC 50 Hz	400 V 3 AC 50 Hz	22,0	4,0	DN65	85,6
HR1030	MG.xx.S.xx.A.1.xxx	1.200	10.600	230 V 1N AC 50 Hz	400 V 3 AC 50 Hz	22,0	4,0	DN 80 - DN100	85,6
HR1040	MG.xx.S.xx.A.1.xxx	2.000	13.000	230 V 1N AC 50 Hz	400 V 3 AC 50 Hz	30,0	5,5	DN80 - DN100 - DN125	85,6

For the configuration of the gas train, see pages 116-117.

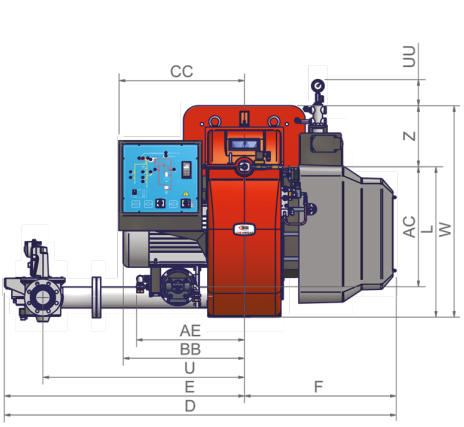

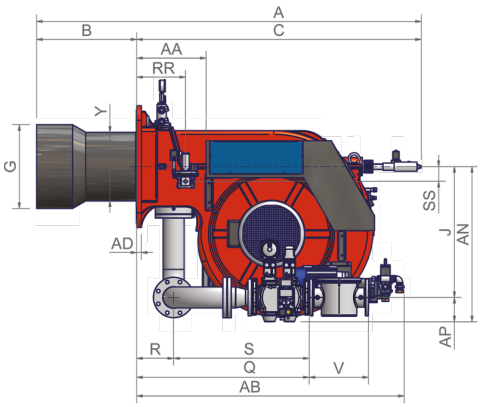

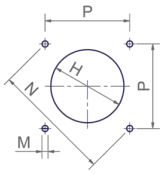

Suggested boiler drilling

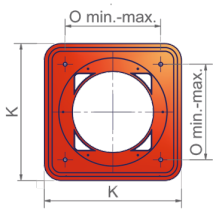

Burner flange

Type	Packaging dimensions (mm)			
	l	p	h	kg
HR1025	2300	1.720	1410	700
HR1030	2300	1.720	1410	700
HR1040	2300	1.720	1410	700

Approximate values

Type	Model	Overall dimensions (mm)																																	
		A	AA	AB	AC	AD	AE	AN	AP	B	BB	C	CC	D	E	F	G	H	J	K	L	M	N	O	P	Q	R	RR	S	SS	U	UU	V	W	Y	Z
HR1025	MG.xx.S.xx.A.1.65	2088	377	1452	651	25	585	827	118	544	641	1544	680	2121	1299	822	400	450	709	660	816	M16	651	460	460	914	200	265	714	80	1092	142	292	1146	379	330
HR1025	MG.xx.S.xx.A.1.80	2088	377	1452	651	25	585	841	132	544	641	1544	680	2123	1301	822	400	450	709	660	816	M16	651	460	460	936	200	265	736	80	1092	142	322	1146	379	330
HR1025	MG.xx.S.xx.A.1.100	2088	377	1452	651	25	585	854	145	544	641	1544	680	2139	1317	822	400	450	709	660	816	M16	651	460	460	842	200	265	642	80	1092	142	382	1146	379	330
HR1030	MG.xx.S.xx.A.1.65	2088	377	1452	651	25	585	827	118	544	657	1544	680	2121	1299	822	454	504	709	660	816	M16	651	460	460	914	200	265	714	80	1092	142	292	1146	372	330
HR1030	MG.xx.S.xx.A.1.80	2088	377	1452	651	25	585	841	132	544	657	1544	680	2123	1301	822	454	504	709	660	816	M16	651	460	460	936	200	265	736	80	1092	142	322	1146	372	330
HR1030	MG.xx.S.xx.A.1.100	2088	377	1452	651	25	585	854	145	544	657	1544	680	2139	1317	822	454	504	709	660	816	M16	651	460	460	842	200	265	642	80	1092	142	382	1146	372	330
HR1040	MG.xx.S.xx.A.1.80	2106	377	1452	651	25	585	841	132	544	657	1562	680	2123	1301	822	514	564	709	660	816	M16	651	460	460	936	200	265	736	80	1092	142	322	1146	408	330
HR1040	MG.xx.S.xx.A.1.100	2106	377	1452	651	25	585	854	145	544	657	1562	680	2139	1317	822	514	564	709	660	816	M16	651	460	460	842	200	265	642	80	1092	142	382	1146	408	330
HR1040	MG.xx.S.xx.A.1.125	2106	377	1452	651	25	585	884	175	544	657	1562	680	2254	1432	822	514	564	709	660	816	M16	651	460	460	954	200	265	754	80	1192	142	480	1146	408	330

Approximate values

MECHANICAL OPERATION

Model	Gas train	Operation	HR1025 Code	HR1025 Price €	HR1030 Code	HR1030 Price €
MG.PR.S.xx.A.1.65	DN65	PR	023071653		023071953	
MG.PR.S.xx.A.1.80	DN80	PR	023071753		023072053	
MG.PR.S.xx.A.1.100	DN100	PR	023071853		023072153	
MG.MD.S.xx.A.1.65	DN65	MD(*)	023071654		023071954	
MG.MD.S.xx.A.1.80	DN80	MD(*)	023071754		023072054	
MG.MD.S.xx.A.1.100	DN100	MD(*)	023071854		023072154	

Model	Gas train	Operation	HR1040 Code	HR1040 Price €
MG.PR.S.xx.A.1.80	DN80	PR	023072253	
MG.PR.S.xx.A.1.100	DN100	PR	023072353	
MG.PR.S.xx.A.1.125	DN125	PR	023072453	
MG.MD.S.xx.A.1.80	DN80	MD(*)	023072254	
MG.MD.S.xx.A.1.100	DN100	MD(*)	023072354	
MG.MD.S.xx.A.1.125	DN125	MD(*)	023072454	

(*) In order for the supply to be completed, the burner must be equipped with the respective modulating probe (see accessory table, page 290).

In compliance with:
- **GAR Directive 2016/426/EU**
- **Low Tension Directive 2014/35/UE**
- **Electromagnetic Compatibility Directive 2014/30/UE**
- **Machinery Directive 2006/42/CE**

ELECTRONIC OPERATION

Model	Gas train	Operation	HR1025 Code	HR1025 Price €	HR1030 Code	HR1030 Price €
MG.PR.S.xx.A.1.65.EC	DN65	PR	02307165C		02307195C	
MG.PR.S.xx.A.1.80.EC	DN80	PR	02307175C		02307205C	
MG.PR.S.xx.A.1.100.EC	DN100	PR	02307185C		02307215C	
MG.MD.S.xx.A.1.65.EC	DN65	MD(*)	02307165G		02307195G	
MG.MD.S.xx.A.1.80.EC	DN80	MD(*)	02307175G		02307205G	
MG.MD.S.xx.A.1.100.EC	DN100	MD(*)	02307185G		02307215G	

Model	Gas train	Operation	HR1040 Code	HR1040 Price €
MG.PR.S.xx.A.1.80.EC	DN80	PR	02307225C	
MG.PR.S.xx.A.1.100.EC	DN100	PR	02307235C	
MG.PR.S.xx.A.1.125.EC	DN125	PR	02307245C	
MG.MD.S.xx.A.1.80.EC	DN80	MD(*)	02307225G	
MG.MD.S.xx.A.1.100.EC	DN100	MD(*)	02307235G	
MG.MD.S.xx.A.1.125.EC	DN125	MD(*)	02307245G	

Model	Gas train	Operation	HR1025 Code	HR1025 Price €	HR1030 Code	HR1030 Price €
MG.MD.S.xx.A.1.65.ES	DN65	MD(*)	02307025S		02307065S	
MG.MD.S.xx.A.1.80.ES	DN80	MD(*)	02307035S		02307075S	
MG.MD.S.xx.A.1.100.ES	DN100	MD(*)	02307045S		02307085S	

Model	Gas train	Operation	HR1040 Code	HR1040 Price €
MG.MD.S.xx.A.1.80.ES	DN80	MD(*)	02307095S	
MG.MD.S.xx.A.1.100.ES	DN100	MD(*)	02307105S	
MG.MD.S.xx.A.1.125.ES	DN125	MD(*)	02307115S	

(*) In order for the supply to be completed, the burner must be equipped with the respective modulating probe (see accessory table, page 290).

In compliance with:
- **GAR Directive 2016/426/EU**
- **Low Tension Directive 2014/35/UE**
- **Electromagnetic Compatibility Directive 2014/30/UE**
- **Machinery Directive 2006/42/CE**

HR1025 HR1030 HR1040 mille SERIES

HR1025 PR-MD

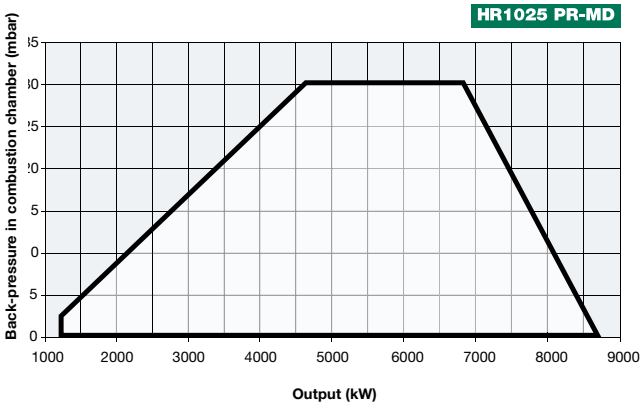

HR1030_65 PR-MD

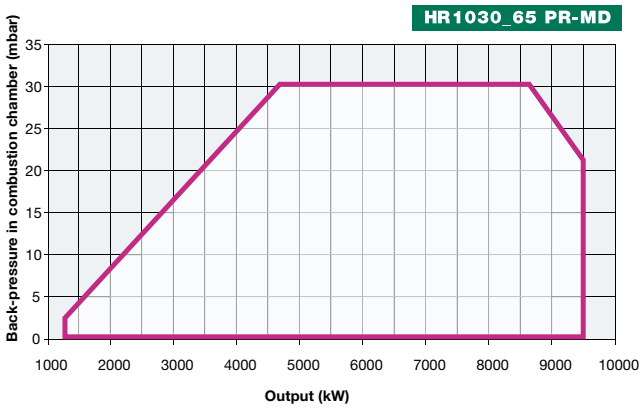

HR1030 PR-MD

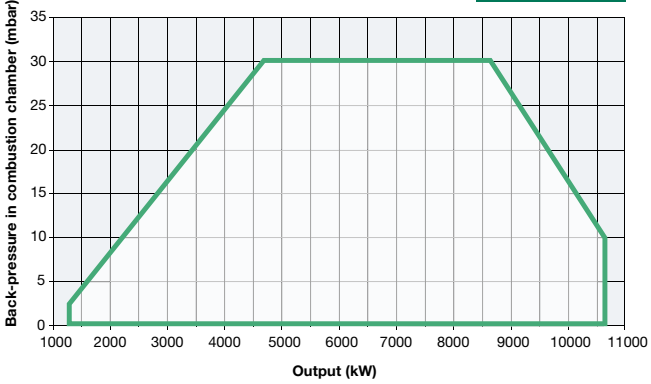

HR1040 PR-MD

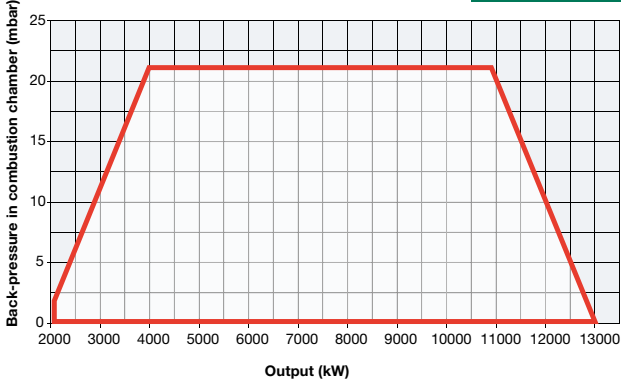

HR1025 PR-MD

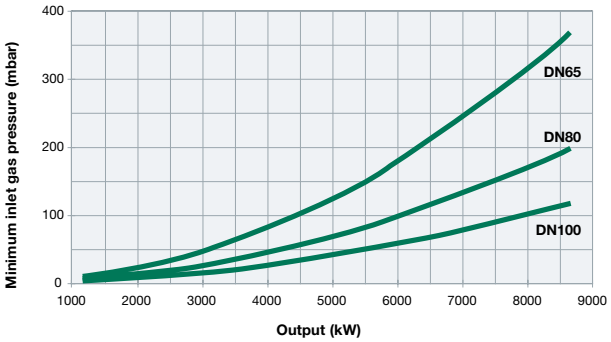

HR1030 ...65 PR-MD

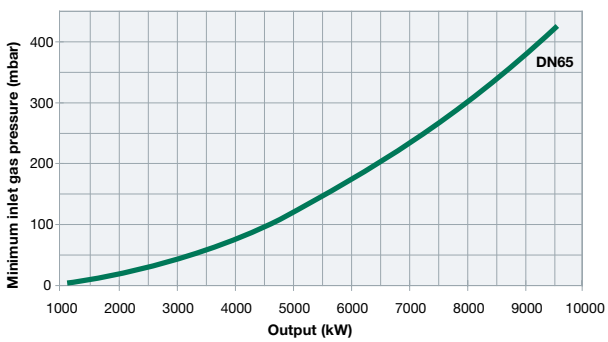

HR1030 PR-MD

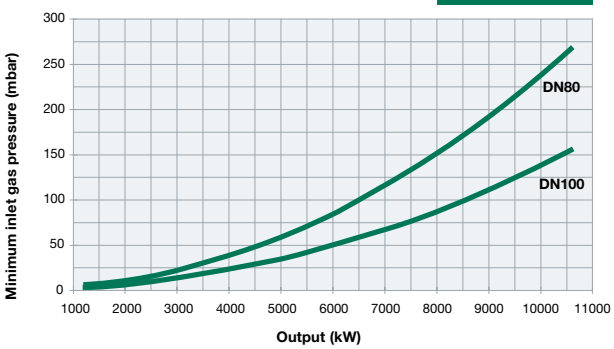

HR1040 PR-MD

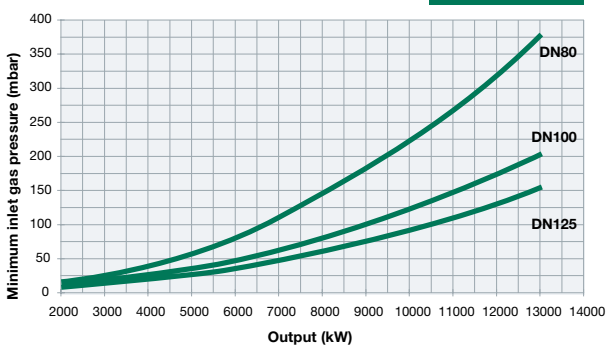

Attention: the graph shows the value of the gas output (kW) against the corresponding pressure without the combustion chamber back pressure. To know the minimum gas pressure at gas train, in order to get the gas output, it is necessary to add the boiler back pressure to the value read on the curve.

mille SERIES N1060A N1300A...SR

NEW

GAS/LIGHT OIL

The new standard N type MILLE series **Low NO_x** burners **Class 2 (< 120 mg/kWh)**, made in aluminum housing with a backward curved centrifugal impeller is studied and developed to get high performance and efficiency combined with low emissions.
In this manner these series can burn the two flues separately. This is possible because these burners are equipped with an independent electric motor for the activation of the oil pump. As a consequence during gas firing, the oil pump motor does not operate and remains off.
These burners are equipped with a high performance combustion head, designed to achieve an high irradiating flame when they run on natural gas. Instead, when they run on light oil, they are equipped with a by-pass nozzle which, using a pressure regulator, can reach a modulating ratio of 1:3.
Therefore, the burners are provided with an UV photocell to control the flame during the operation.

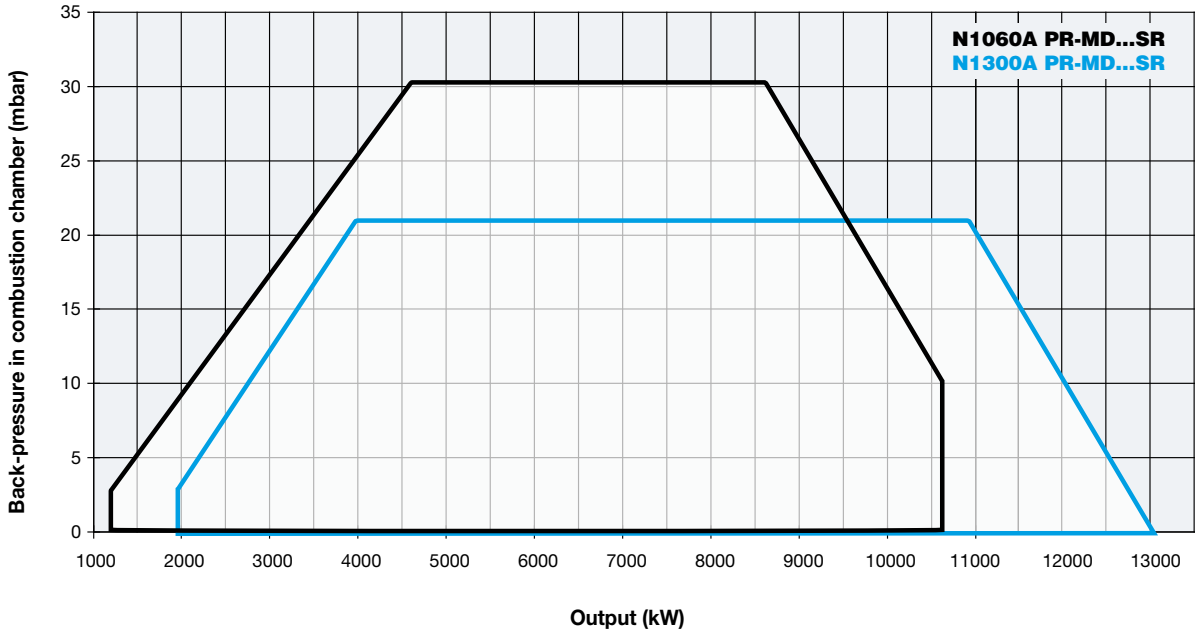

TECHNICAL DETAILS

Type	Model	Power kW		Auxiliary electrical power supply	Motor electrical power supply	Fan motor	Pump motor	Gas connections	Noise level
		min.	max.			kW	kW		dBA
N1060A	MG.xx.SR.xx.A.1.xxx	1.200	10.600	230 V 1N AC 50 Hz	400 V 3 AC 50 Hz	22,0	4,0	DN80 - DN100 - DN125	< 85,6
N1300A	MG.xx.SR.xx.A.1.xxx	2.000	13.000	230 V 1N AC 50 Hz	400 V 3 AC 50 Hz	30,0	4,0	DN80 - DN100 - DN125	< 85,6

For the configuration of the gas train, see pages 116-117.

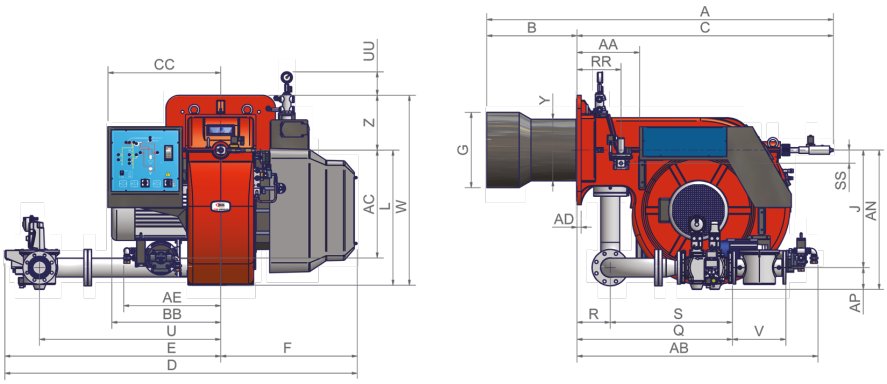

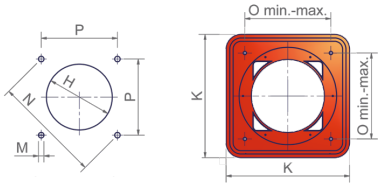

Suggested boiler drilling

Burner flange

Type	Packaging dimensions (mm)			
	l	p	h	kg
N1060A	2.300	1.720	1.410	700
N1300A	2.300	1.720	1.410	700

Approximate values

Type	Model	Overall dimensions (mm)																																	
		A	AA	AB	AC	AD	AE	AN	AP	B	BB	C	CC	D	E	F	G	H	J	K	L	M	N	O	P	Q	R	RR	S	SS	U	UU	V	W	Y	Z
N1060A	MG.xx.SR.xx.A.1.80	2088	377	1452	651	25	585	841	132	544	657	1544	680	2123	1301	822	454	504	709	660	816	M16	651	460	460	936	200	265	736	80	1092	142	322	1146	372	330
N1060A	MG.xx.SR.xx.A.1.100	2088	377	1452	651	25	585	854	145	544	657	1544	680	2139	1317	822	454	504	709	660	816	M16	651	460	460	842	200	265	642	80	1092	142	382	1146	372	330
N1060A	MG.xx.SR.xx.A.1.125	2088	377	1452	651	25	585	854	145	544	657	1544	680	2139	1317	822	454	504	709	660	816	M16	651	460	460	842	200	265	642	80	1092	142	382	1146	372	330
N1300A	MG.xx.SR.xx.A.1.80	2106	377	1452	651	25	585	841	132	544	657	1562	680	2123	1301	822	514	564	709	660	816	M16	651	460	460	936	200	265	736	80	1092	142	322	1146	408	330
N1300A	MG.xx.SR.xx.A.1.100	2106	377	1452	651	25	585	854	145	544	657	1562	680	2139	1317	822	514	564	709	660	816	M16	651	460	460	842	200	265	642	80	1092	142	382	1146	408	330
N1300A	MG.xx.SR .xx.A.1.125	2106	377	1452	651	25	585	884	175	544	657	1562	680	2254	1432	822	514	564	709	660	816	M16	651	460	460	954	200	265	754	80	1192	142	480	1146	408	330

Approximate values

GAS/LIGHT OIL

MECHANICAL OPERATION

Model	Gas train	Operation	N1060A...SR Code	N1060A...SR Price €	N1300A...SR Code	N1300A...SR Price €
MG.PR.SR.xx.A.1.80	DN80	PR	023073153		023073453	
MG.PR.SR.xx.A.1.100	DN100	PR	023073253		023073553	
MG.PR.SR.xx.A.1.125	DN 125	PR	023073353		023073653	
MG.MD.SR.xx.A.1.80	DN80	MD(*)	023073154		023073454	
MG.MD.SR.xx.A.1.100	DN100	MD(*)	023073254		023073554	
MG.MD.SR.xx.A.1.125	DN 125	MD(*)	023073354		023073654	

(*) In order for the supply to be completed, the burner must be equipped with the respective modulating probe (see accessory table, page 290).

In compliance with:
- **GAR Directive 2016/426/EU**
- **Low Tension Directive 2014/35/UE**
- **Electromagnetic Compatibility Directive 2014/30/UE**
- **Machinery Directive 2006/42/CE**

ELECTRONIC OPERATION

Model	Gas train	Operation	N1060A...SR Code	N1060A...SR Price €	N1300A...SR Code	N1300A...SR Price €
MG.PR.SR.xx.A.1.80.EC	DN80	PR	02307315C		02307345C	
MG.PR.SR.xx.A.1.100.EC	DN100	PR	02307325C		02307355C	
MG.PR.SR.xx.A.1.125.EC	DN125	PR	02307335C		02307365C	
MG.MD.SR.xx.A.1.80.EC	DN80	MD(*)	02307315G		02307345G	
MG.MD.SR.xx.A.1.100.EC	DN100	MD(*)	02307325G		02307355G	
MG.MD.SR.xx.A.1.125.EC	DN 125	MD(*)	02307335G		02307365G	
MG.MD.SR.xx.A.1.80.ES	DN80	MD(*)	02307315S		02307345S	
MG.MD.SR.xx.A.1.100.ES	DN100	MD(*)	02307325S		02307355S	
MG.MD.SR.xx.A.1.125.ES	DN 125	MD(*)	02307335S		02307365S	

(*) In order for the supply to be completed, the burner must be equipped with the respective modulating probe (see accessory table, page 290).

In compliance with:
- **GAR Directive 2016/426/EU**
- **Low Tension Directive 2014/35/UE**
- **Electromagnetic Compatibility Directive 2014/30/UE**
- **Machinery Directive 2006/42/CE**

N1060A PR-MD...SR

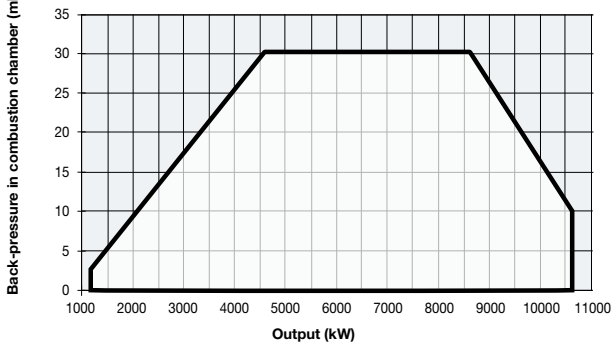

N1300A PR-MD...SR

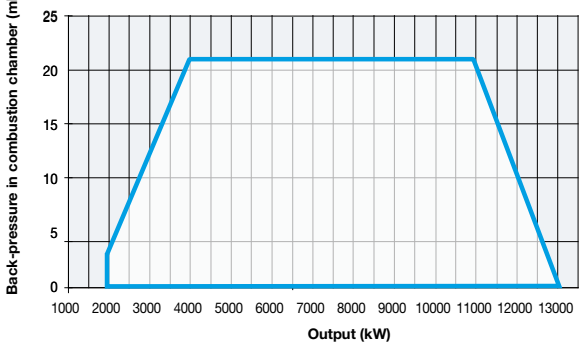

N1060A PR-MD...SR

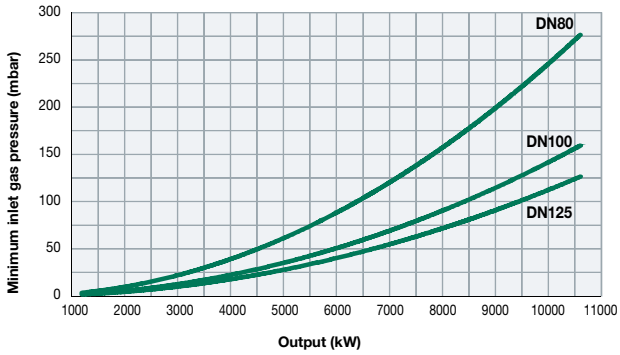

N1300A PR-MD...SR

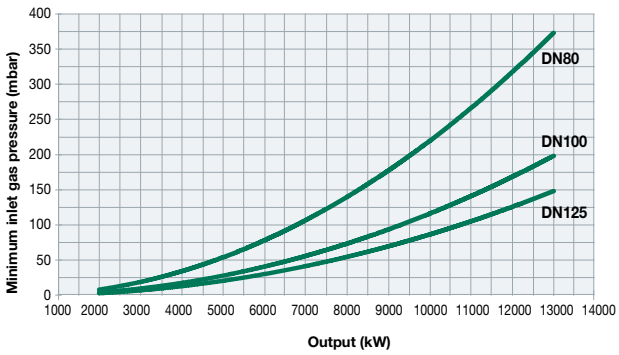

Attention: the graph shows the value of the gas output (kW) against the corresponding pressure without the combustion chamber back pressure. To know the minimum gas pressure at gas train, in order to get the gas output, it is necessary to add the boiler back pressure to the value read on the curve.

duemila SERIES HR2050 HR2060 HR2080

GAS/LIGHT OIL

The DUEMILA series, available in both progressive and modulating operations, represents the culmination of our experience in the field of medium-large capacity burners (up to 19.000 kW).
Like all the other dual fuels models, this series perfectly combine the mechanical devices and systems typical of gas burners with the ones of light oil burners. In this manner these series can burn the two flues separately. This is possible because these burners are equipped with an independent electric motor for the activation of the oil pump.
As a consequence during gas firing, the oil pump motor does not operate and remains off.
These burners are equipped with a high performance combustion head, designed to achieve an high irradiating flame when they run on natural gas. Instead, when they run on light oil, they are equipped with a by-pass nozzle which, using a pressure regulator, can reach a modulating ratio of 1:3.
The control panel facia is printed with a mimic diagram fitted with neon lamps to indicate the different stages of burners operation and any abnormalities.
Therefore, the burners are provided with an UV photocell to control the flame during the operation.

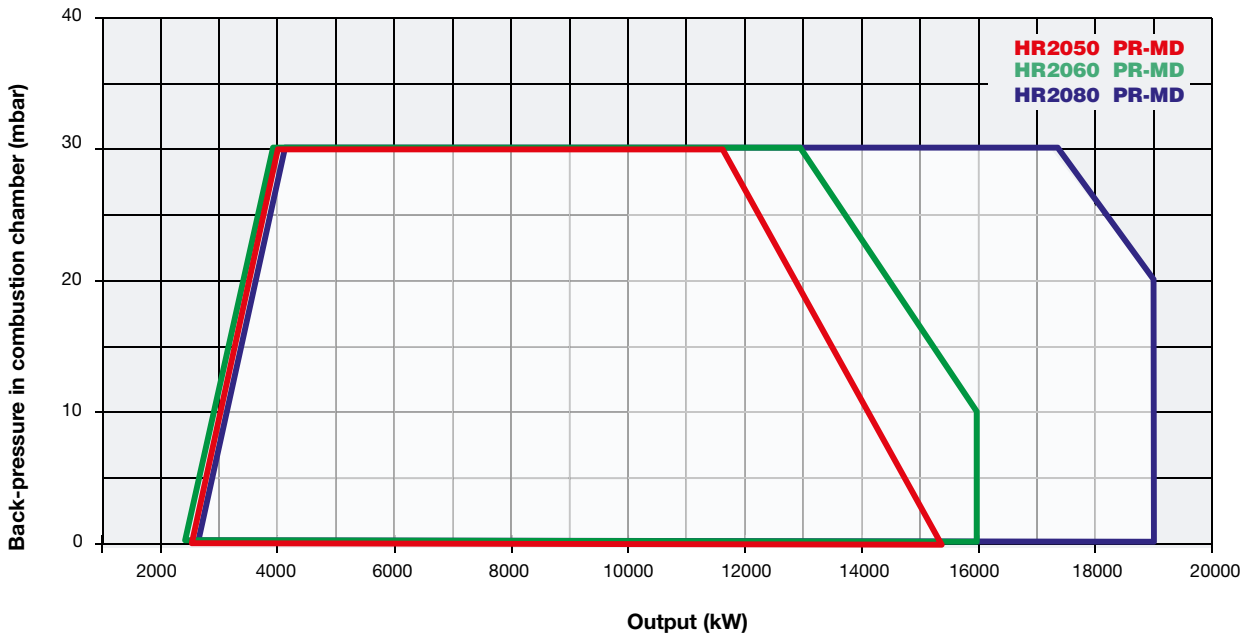

HR2050 HR2060 HR2080 duemila SERIES

TECHNICAL DETAILS

Type	Model	Power kW		Auxiliary electrical power supply	Motor electrical power supply	Fan motor	Pump motor	Gas connections	Noise level
		min.	max.			kW	kW		dBA
HR2050	MG.xx.S.xx.A.1.xxx.xx	2.500	15.200	230 V 1N AC 50 Hz	400 V 3 AC 50 Hz	37,0	5,5	DN80 - DN100 - DN125	92,5
HR2060	MG.xx.S.xx.A.1.xxx.xx	2.500	16.000	230 V 1N AC 50 Hz	400 V 3 AC 50 Hz	45,0	5,5	DN80 - DN100 - DN125	91,7
HR2080	MG.xx.S.xx.A.1.xxx.xx	2.500	19.000	230 V 1N AC 50 Hz	400 V 3 AC 50 Hz	55,0	5,5	DN100 - DN125	91,7

For the configuration of the gas train, see pages 116-117.

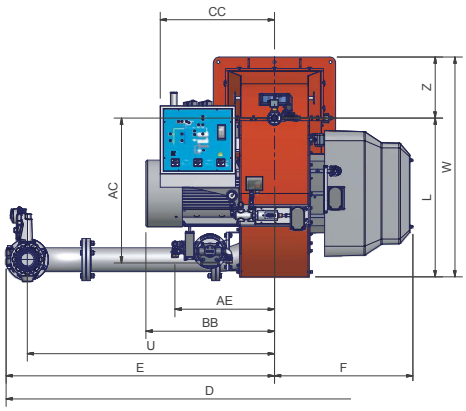

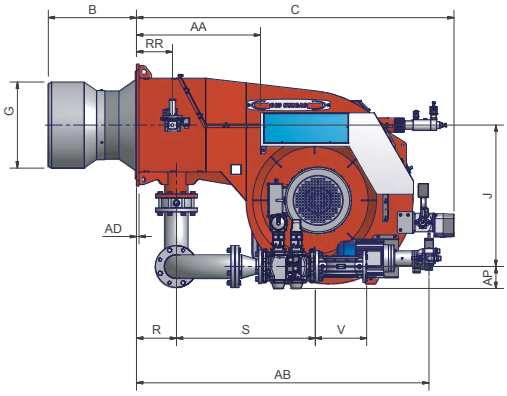

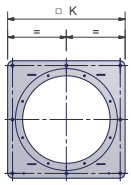

Burner flange

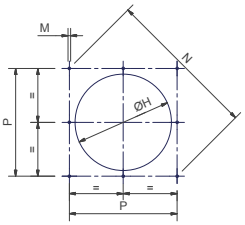

Suggested boiler drilling

Type	Packaging dimensions (mm)			
	l	p	h	kg
HR2050	2.396	1.886	1.969	1.330
HR2060	2.396	1.886	1.969	1.410
HR2080	2.396	1.886	1.969	1.510

Approximate values

Type	Model	Overall dimensions (mm)																											
		A	AA	AC	AD	AE	AP	B*	BB	C	CC	D	E	F	G*	H*	J	K	L	M	N	P	R	RR	S	U	V	W	Z
HR2050	MG.xx.S.xx.A.1.80.xx	2180	741	866	15	595	132	520	768	1898	735	2431	1604	827	514	564	845	730	949	M16	948	670	239	215	827	1477	310	1314	365
HR2050	MG.xx.S.xx.A.1.100.xx	2180	741	866	15	595	145	520	768	1898	735	2447	1620	827	514	564	845	730	949	M16	948	670	239	215	874	1477	350	1314	365
HR2050	MG.xx.S.xx.A.1.125.xx	2180	741	866	15	595	175	520	768	1898	735	2465	1638	827	514	564	845	730	949	M16	948	670	239	215	755	1477	480	1314	365
HR2060	MG.xx.S.xx.A.1.80.xx	2160	741	866	15	645	132	500	807	1890	735	2309	1463	846	550	600	775	850	949	M16	1117	790	239	215	827	1336	310	1374	425
HR2060	MG.xx.S.xx.A.1.100.xx	2160	741	866	15	645	145	500	807	1890	735	2325	1479	846	550	600	775	850	949	M16	1117	790	239	215	874	1336	350	1374	425
HR2060	MG.xx.S.xx.A.1.125.xx	2160	741	866	15	645	175	500	807	1890	735	2343	1497	846	550	600	775	850	949	M16	1117	790	239	215	755	1336	480	1374	425
HR2080	MG.xx.S.xx.A.1.100.xx	2180	741	866	15	645	145	520	885	1890	735	2325	1479	846	700	750	775	850	949	M16	1117	790	239	215	874	1336	350	1374	425
HR2080	MG.xx.S.xx.A.1.125.xx	2180	741	866	15	645	175	520	885	1890	735	2343	1497	846	700	750	775	850	949	M16	1117	790	239	215	755	1336	480	1374	425

* The B, G, H dimensions must be confirmed from our technical DPT.
Approximate values

Monoblock burners 2000 series are supplied complete with a steel supporting frame: burner installation and manutention are greatly simplified.
The frame is equipped with wheels to easily move the burner, and its height is adjustable to match any type of boiler or furnace.

SUPPORTING FRAME FOR BURNERS 2050 SERIES

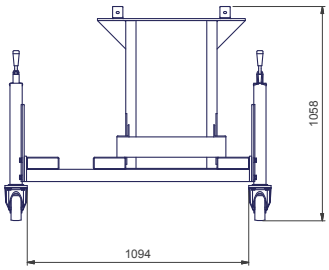

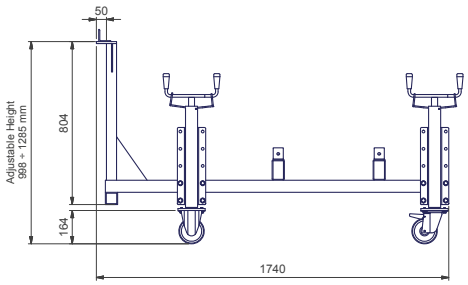

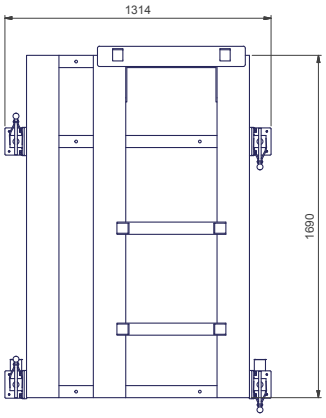

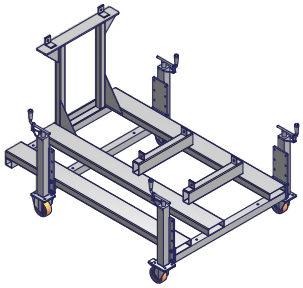

SUPPORTING FRAME FOR BURNERS 2060/2080 SERIES

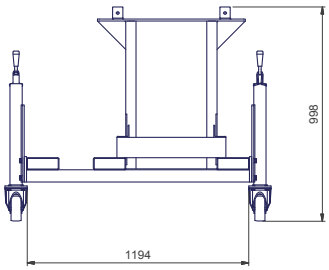

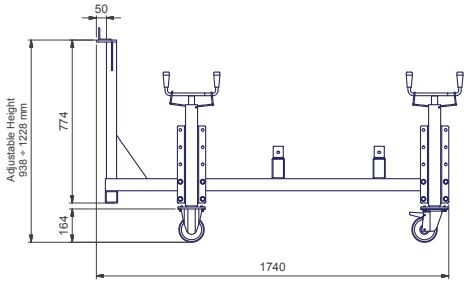

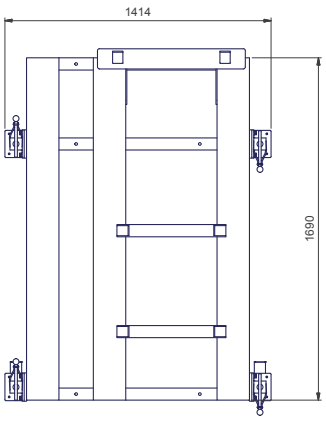

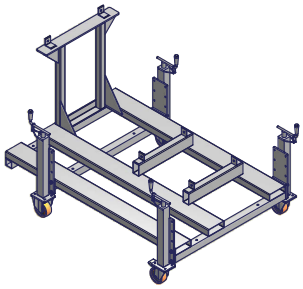

ELECTRONIC OPERATION

Model	Gas train	Operation	HR2050 Code	HR2050 Price €	HR2060 Code	HR2060 Price €	HR2080 Code	HR2080 Price €
MG-.PR.S.xx.A.1.80.EC	DN80	PR	03207015C		-		-	
MG-.PR.S.xx.A.1.100.EC	DN100	PR	03207025C		-		-	
MG-.PR.S.xx.A.1.125.EC	DN125	PR	03207035C		-		-	
MG-.MD.S.xx.A.1.80.EC	DN80	MD(*)	03207015G		-		-	
MG-.MD.S.xx.A.1.100.EC	DN100	MD(*)	03207025G		-		-	
MG-.MD.S.xx.A.1.125.EC	DN125	MD(*)	03207035G		-		-	
MG-.MD.S.xx.A.1.80.ES	DN80	MD(*)	03207015S		03207045S		-	
MG-.MD.S.xx.A.1.100.ES	DN100	MD(*)	03207025S		03207055S		03207085S	
MG-.MD.S.xx.A.1.125.ES	DN125	MD(*)	03207035S		03207065S		03207095S	

(*) In order for the supply to be completed, the burner must be equipped with the respective modulating probe (see accessory table, page 290).

In compliance with:
- **GAR Directive 2016/426/EU**
- **Low Tension Directive 2014/35/UE**
- **Electromagnetic Compatibility Directive 2014/30/UE**
- **Machinery Directive 2006/42/CE**

HR2050 HR2060 HR2080

GAS/LIGHT OIL

HR2050 PR-MD

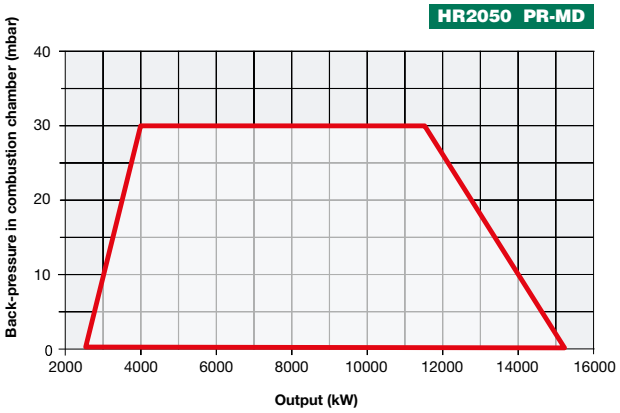

HR2060 PR-MD

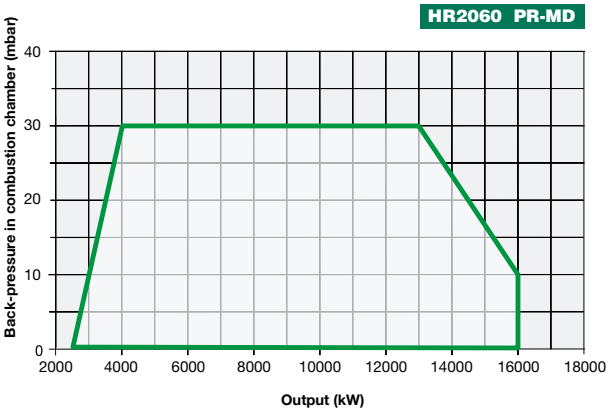

HR2080 PR-MD

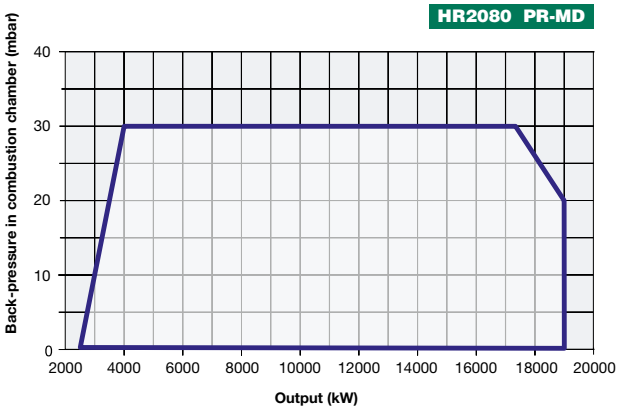

HR2050 PR-MD

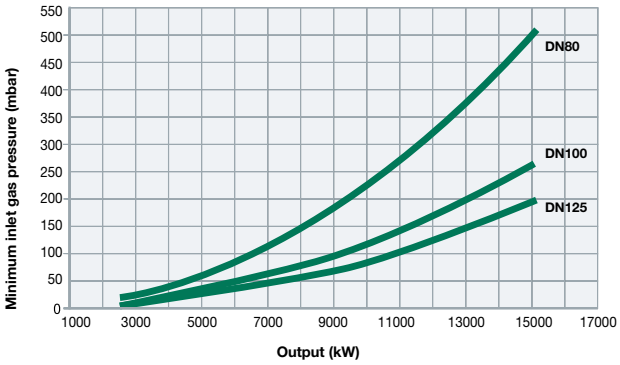

HR2060 PR-MD

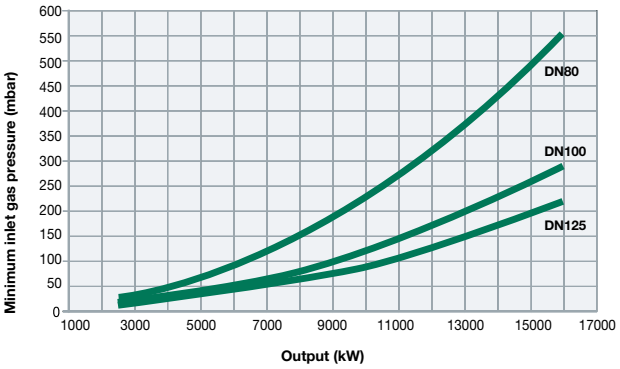

HR2080 PR-MD

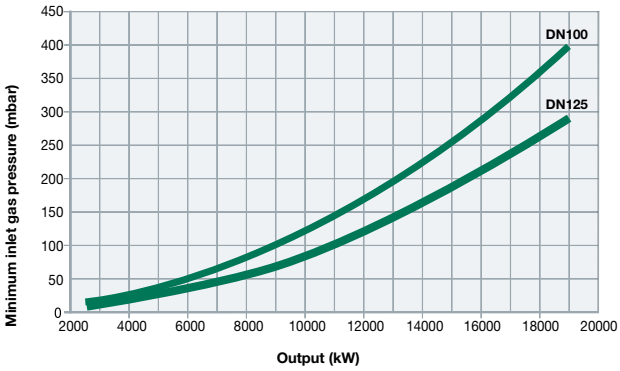

Attention: the graph shows the value of the gas output (kW) against the corresponding pressure without the combustion chamber back pressure. To know the minimum gas pressure at gas train, in order to get the gas output, it is necessary to add the boiler back pressure to the value read on the curve.

LOW NO_x DUAL FUEL BURNERS NATURAL GAS/LIGHT OIL

novanta series

HRX92R - PR/MD
HRX92.1 - PR/MD

NEW **novanta series**

G215X - PR/MD...xR
G250X - PR/MD...xR
G300X - PR/MD...xR

NEW **cinquecento series**

H365X - PR/MD...xR
H440X - PR/MD...xR
H500X - PR/MD...xR

NEW **cinquecento series**

K590X - PR/MD...xR
K750X - PR/MD...xR

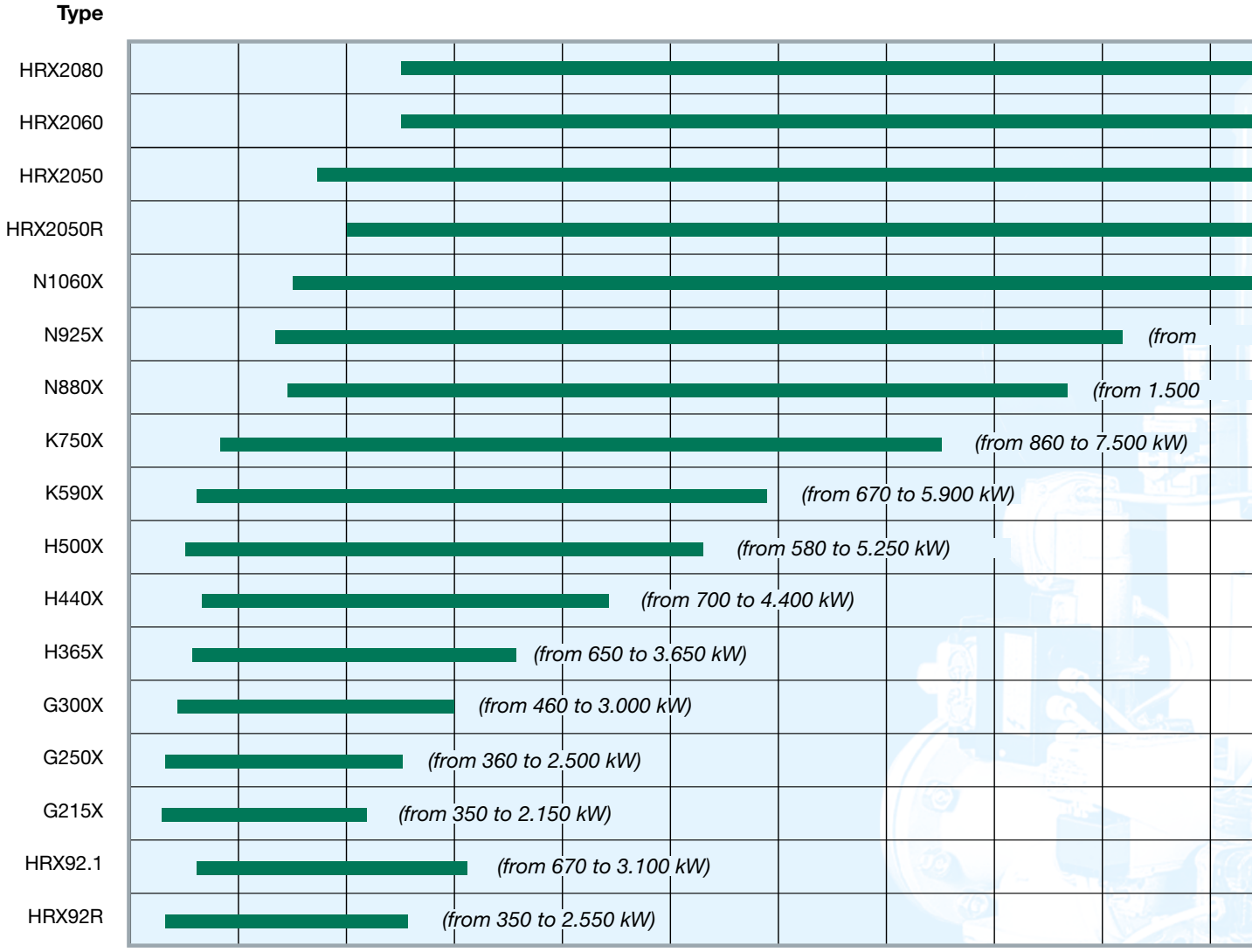

NEW

mille series	duemila series
N880X - PR/MD...xR	**HRX2050R** - PR/MD
N925X - PR/MD...xR	**HRX2050** - PR/MD
N1060X - PR/MD...xR	**HRX2060** - PR/MD
	HRX2080 - PR/MD

CIB UNIGAS
< 80 mg/kWh
CLASS 3
Low NOx

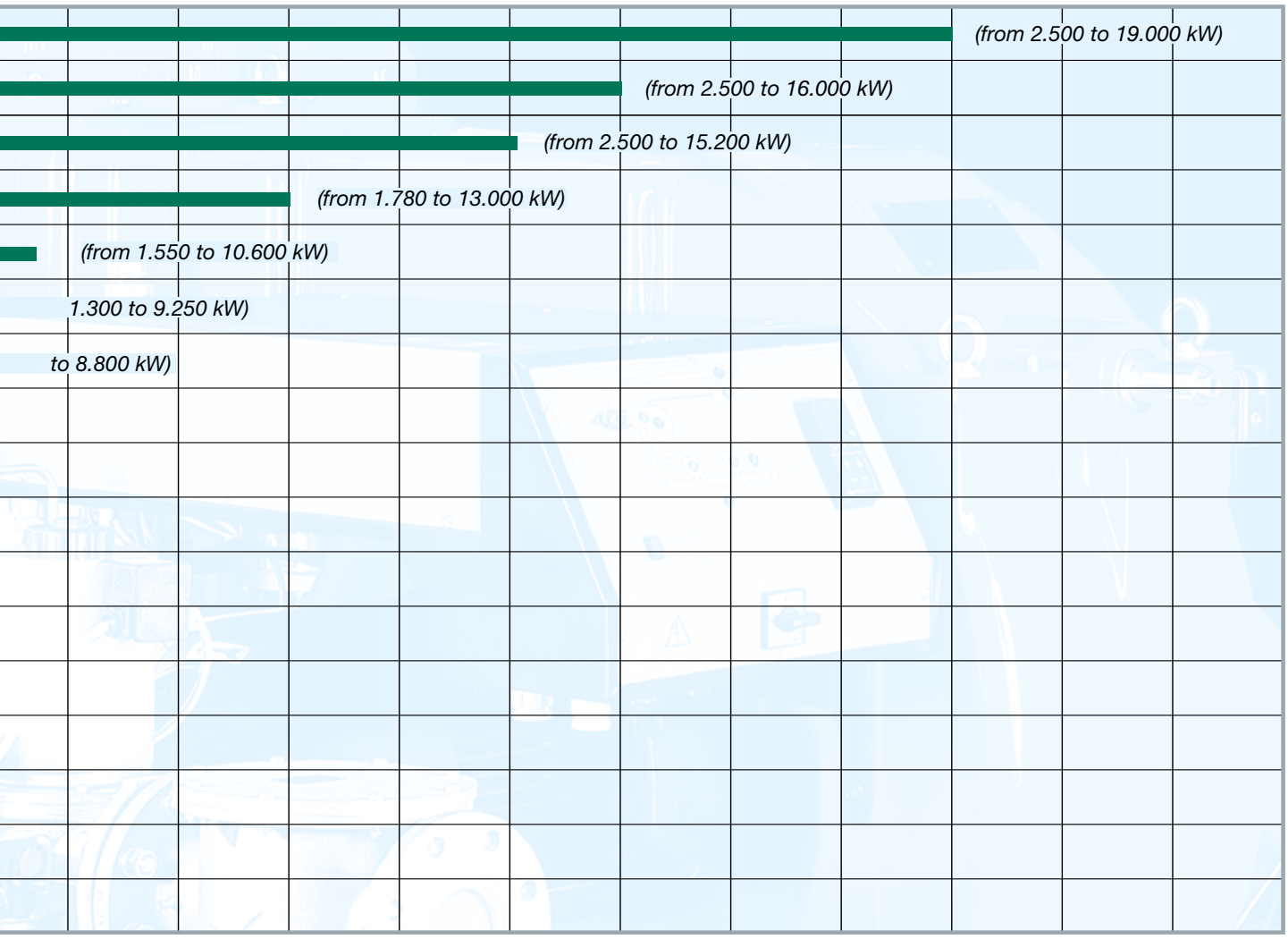

novanta SERIES HRX92R HRX92.1

GAS/LIGHT OIL

The NOVANTA series, available in both progressive and modulating operations, represent the culmination of our experience in the field of medium-large capacity burners. Like all other dual fuels models, these series perfectly combine all the mechanisms to work with the two flues separately. This is possible because these burners are equipped with an independent electric motor for the activation of the oil pump. As a consequence, during gas firing, the oil pump motor does not operate and remains off.
These burners are equipped with a high performance combustion head, designed to achieve an high irradiating flame when they run on natural gas. Instead, when they run on light oil, they are equipped with a by-pass nozzle which, using a pressure regulator, can reach a modulating ratio of 1:3.
The control panel facia is printed whit a mimic diagram fitted with neon lamps to indicate the different stages of burners operation and any abnormalities. Therefore, the burners are provided with an UV photocell to control the flame during the operation.
These series of burners integrate our well known performance and reliability characteristics with the new air inlet system equipped with a silencer and a new combustion head which guarantees low pollutant emissions (gas side < 80mg/kWh Class 3 EN676).

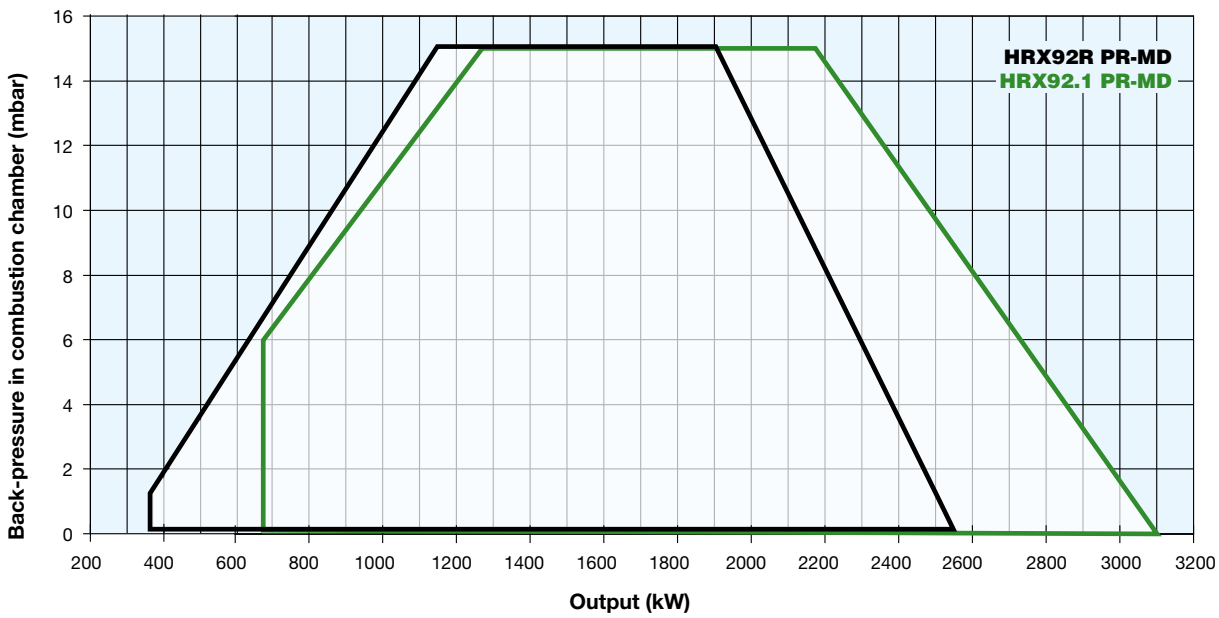

TECHNICAL DETAILS

Type	Model	Power kW		Auxiliary electrical power supply	Motor electrical power supply	Fan motor	Pump motor	Gas connections	Noise level
		min.	max.			kW	kW	Rp	dBA
HRX92R	MG.xx.x.xx.A.1.xxx	350	2.550	230 V 1N AC 50 Hz	400 V 3 AC 50 Hz	7,5	1,1	2” - DN65 - DN80 - DN100	74,5
HRX92.1	MG.xx.x.xx.A.1.xxx	670	3.100	230 V 1N AC 50 Hz	400 V 3 AC 50 Hz	7,5	1,1	2” - DN65 - DN80 - DN100	76,9

For the configuration of the gas train, see pages 116-117.

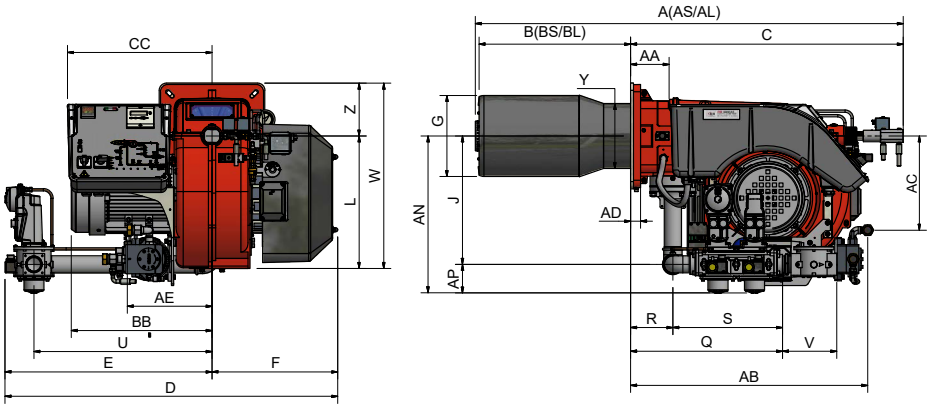

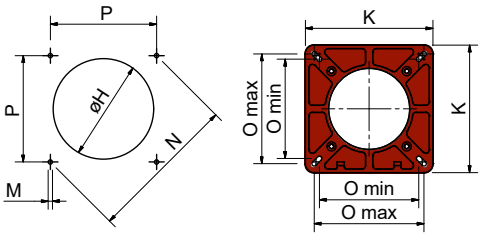

Suggested boiler drilling

Burner flange

Type	Packaging dimensions (mm)			
	l	p	h	kg
HRX92R	1730	1280	1020	315
HRX92.1	1730	1280	1020	315

Approximate values

Type	Model	Overall dimensions (mm)																																
		AS	AL	AA	AB	AC	AD	AE	AN	AP	BS	BL	BB	C	CC	D	E	F	G	J	K	L	M	N	O		P	Q	R	S	U	V	W	Y	Z
																									min.	max.									
HRX92R	MG-.xx.x.xx.A.1.50	1368	1509	135	831	330	35	297	550	100	390	490	493	978	506	1160	725	435	259	450	360	524	M12	424	280	310	300	532	148	384	624	190	709	228	185
HRX92R	MG.xx.x.xx.A.1.65	1368	1509	135	831	330	35	297	564	117	390	490	493	978	506	1406	971	435	259	447	360	524	M12	424	280	310	300	632	148	484	846	292	709	228	185
HRX92R	MG.xx.x.xx.A.1.80	1368	1509	135	831	330	35	297	579	132	390	490	493	978	506	1437	1002	435	259	447	360	524	M12	424	280	310	300	683	148	535	875	313	709	228	185
HRX92R	MG.xx.x.xx.A.1.100	1368	1509	135	831	330	35	297	592	145	390	490	493	978	506	1520	1085	435	259	447	360	524	M12	424	280	310	300	790	148	642	942	353	709	228	185
HRX92.1	MG.xx.x.xx.A.1.50	1345	1486	135	831	330	35	297	550	100	420	530	493	955	506	1160	725	435	284	450	360	524	M12	424	280	310	300	532	148	384	624	190	709	228	185
HRX92.1	MG.xx.x.xx.A.1.65	1345	1486	135	831	330	35	297	564	117	420	530	493	955	506	1406	971	435	284	447	360	524	M12	424	280	310	300	632	148	484	846	292	709	228	185
HRX92.1	MG.xx.x.xx.A.1.80	1345	1486	135	831	3 30	35	297	579	132	420	530	493	955	506	1437	1002	435	284	447	360	524	M12	424	280	310	300	683	148	535	875	313	709	228	185
HRX92.1	MG.xx.x.xx.A.1.100	1345	1486	135	831	330	35	297	592	145	420	530	493	955	506	1520	1085	435	284	447	360	524	M12	424	280	310	300	790	148	642	942	353	709	228	185

Approximate values

ELECTRONIC OPERATION

Model	Gas train	Operation	HRX92R Code	HRX92R Price €	HRX92.1 Code	HRX92.1 Price €
MG.PR.S.xx.A.1.50.EC	2"	PR	01207555C		01207635C	
MG.PR.L.xx.A.1.50.EC	2"	PR	01207565C		01207645C	
MG.PR.S.xx.A.1.65.EC	DN65	PR	01207575C		01207655C	
MG.PR.L.xx.A.1.65.EC	DN65	PR	01207585C		01207665C	
MG.PR.S.xx.A.1.80.EC	DN80	PR	01207595C		01207675C	
MG.PR.L.xx.A.1.80.EC	DN80	PR	01207605C		01207685C	
MG.PR.S.xx.A.1.100.EC	DN100	PR	01207615C		01207695C	
MG.PR.L.xx.A.1.100.EC	DN100	PR	01207625C		01207705C	
MG.MD.S.xx.A.1.50.EC	2"	MD(*)	01207555G		01207635G	
MG.MD.L.xx.A.1.50.EC	2"	MD(*)	01207565G		01207645G	
MG.MD.S.xx.A.1.65.EC	DN65	MD(*)	01207575G		01207655G	
MG.MD.L.xx.A.1.65.EC	DN65	MD(*)	01207585G		01207665G	
MG.MD.S.xx.A.1.80.EC	DN80	MD(*)	01207595G		01207675G	
MG.MD.L.xx.A.1.80.EC	DN80	MD(*)	01207605G		01207685G	
MG.MD.S.xx.A.1.100.EC	DN100	MD(*)	01207615G		01207695G	
MG.MD.L.xx.A.1.100.EC	DN100	MD(*)	01207625G		01207705G	
MG.MD.S.xx.A.1.50.ES	2"	MD(*)	01207555S		01207635S	
MG.MD.L.xx.A.1.50.ES	2"	MD(*)	01207565S		01207645S	
MG.MD.S.xx.A.1.65.ES	DN65	MD(*)	01207575S		01207655S	
MG.MD.L.xx.A.1.65.ES	DN65	MD(*)	01207585S		01207665S	
MG.MD.S.xx.A.1.80.ES	DN80	MD(*)	01207595S		01207675S	
MG.MD.L.xx.A.1.80.ES	DN80	MD(*)	01207605S		01207685S	
MG.MD.S.xx.A.1.100.ES	DN100	MD(*)	01207615S		01207695S	
MG.MD.L.xx.A.1.100.ES	DN100	MD(*)	01207625S		01207705S	

(*) In order for the supply to be completed, the burner must be equipped with the respective modulating probe (see accessory table, page 290).

In compliance with:
- **GAR Directive 2016/426/EU**
- **Low Tension Directive 2014/35/UE**
- **Electromagnetic Compatibility Directive 2014/30/UE**
- **Machinery Directive 2006/42/CE**

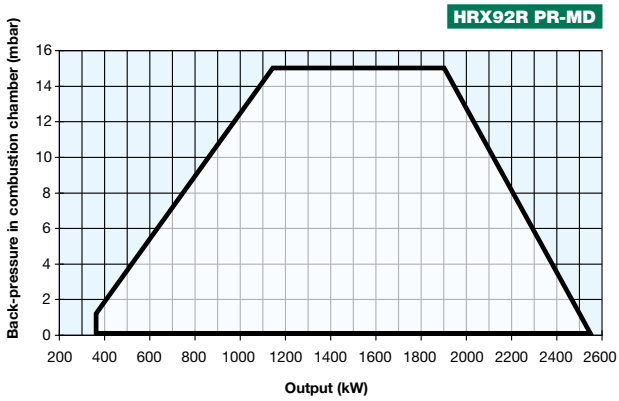

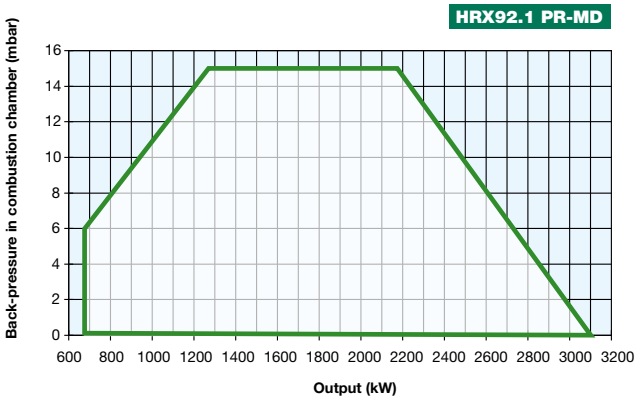

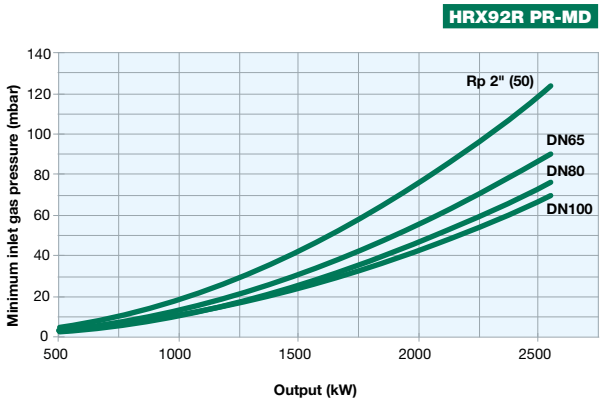

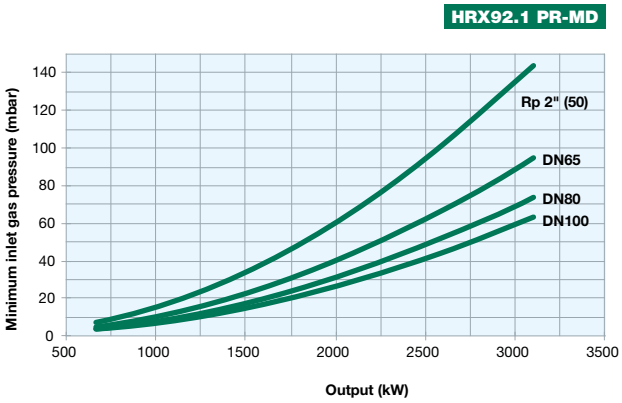

Attention: the graph shows the value of the gas output (kW) against the corresponding pressure without the combustion chamber back pressure. To know the minimum gas pressure at gas train, in order to get the gas output, it is necessary to add the boiler back pressure to the value read on the curve.

novanta SERIES G215X G250X G300X...xR

GAS/LIGHT OIL

NEW

The new G type NOVANTA series **Low NO_x** burners **Class 3 (< 80 mg/kWh)**, made in aluminum housing with a backward curved centrifugal impeller is studied and developed to get high performance and efficiency combined with low emissions.
In this manner these series can burn the two flues separately. This is possible because these burners are equipped with an independent electric motor for the activation of the oil pump. As a consequence during gas firing, the oil pump motor does not operate and remains off.
These burners are equipped with a high performance combustion head, designed to achieve an high irradiating flame when they run on natural gas. Instead, when they run on light oil, they are equipped with a by-pass nozzle which, using a pressure regulator, can reach a modulating ratio of 1:3.
Therefore, the burners are provided with an UV photocell to control the flame during the operation.

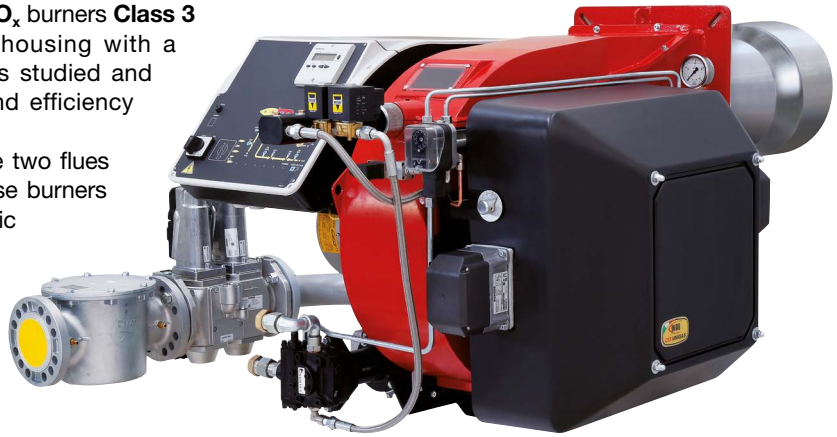

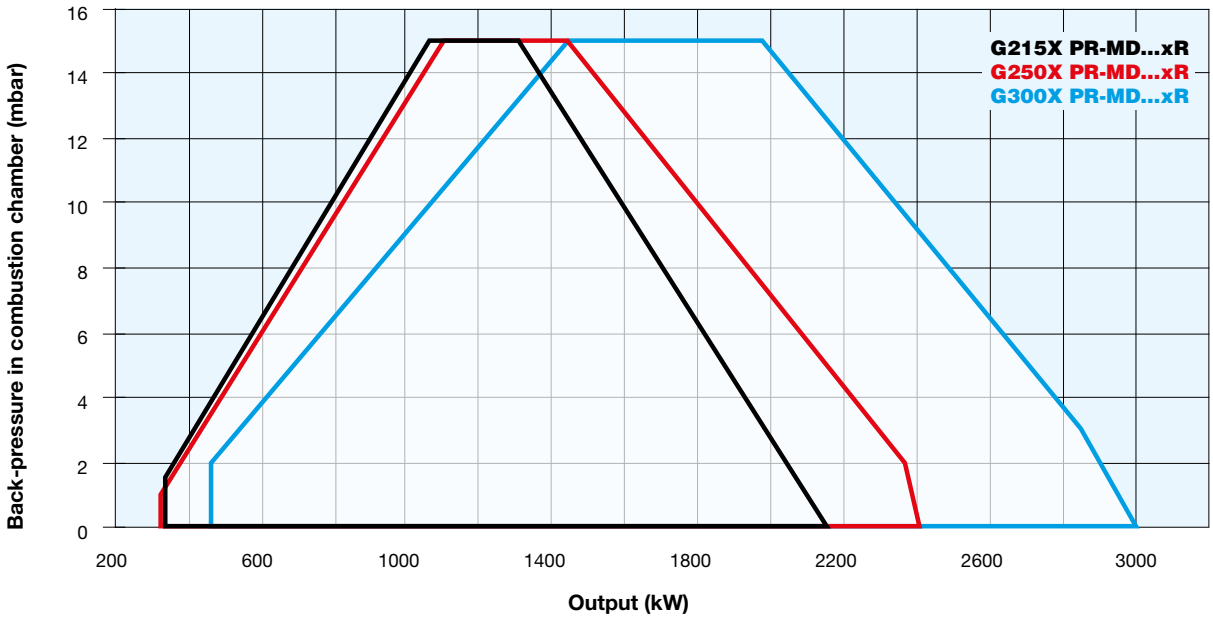

G215X G250X G300X...xR novanta SERIES

TECHNICAL DETAILS

Type	Model	Power kW		Auxiliary electrical power supply	Motor electrical power supply	Fan motor	Pump motor	Gas connections	Noise level
		min.	max.			kW	kW	Rp	dBA
G215X	MG.xx.xR.xx.A.1.xxx	350	2.150	230 V 1N AC 50 Hz	400 V 3 AC 50 Hz	3	1,1	2” - DN65 - DN80 - DN100	< 85
G250X	MG.xx.xR.xx.A.1.xxx	360	2.500	230 V 1N AC 50 Hz	400 V 3 AC 50 Hz	3	1,1	2” - DN65 - DN80 - DN100	< 85
G300X	MG.xx.xR.xx.A.1.xxx	460	3.000	230 V 1N AC 50 Hz	400 V 3 AC 50 Hz	4	1,1	2” - DN65 - DN80 - DN100	< 85

For the configuration of the gas train, see pages 116-117.

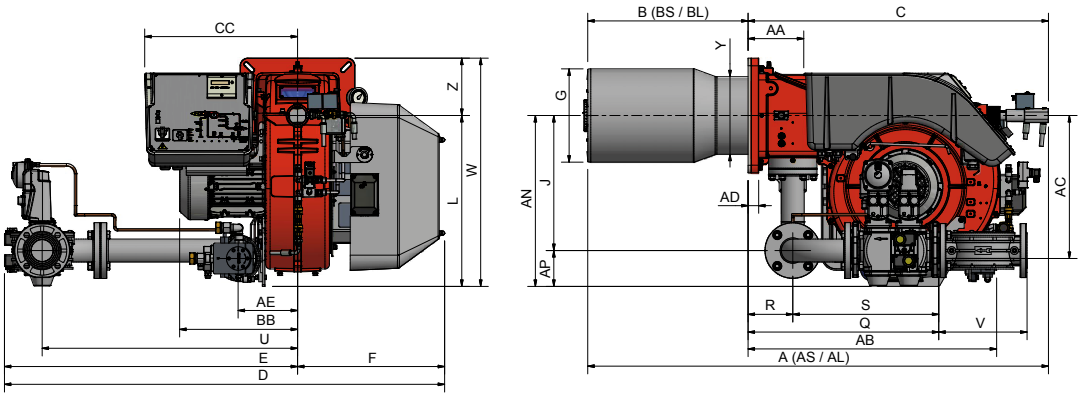

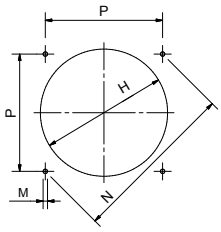

Suggested boiler drilling

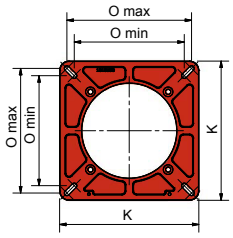

Burner flange

Type	Packaging dimensions (mm)			
	l	p	h	kg
G215X	1680	1050	1080	320
G250X	1680	1050	1080	330
G300X	1680	1050	1080	330

Type	Model	Overall dimensions (mm)																																	
		AS	AL	AA	AB	AC	AD	AE	AN	AP	BS	BL	BB	C	CC	D	E	F	G	H	J	K	L	M	N	O min.	O max.	P	Q	R	S	U	V	W	Y	Z
G215X	MG.xx.SR.xx.A.1.50	1323	1423	184	823	474	35	197	550	100	390	490	391	933	531	1212	725	487	259	289	450	380	518	M12	453	300	340	320	533	149	384	624	190	708	257	190
G215X	MG.xx.SR.xx.A.1.65	1323	1423	184	823	474	35	197	567	117	390	490	391	933	531	1456	969	487	259	289	450	380	518	M12	453	300	340	320	636	149	487	845	292	708	257	190
G215X	MG.xx.SR.xx.A.1.80	1323	1423	184	823	474	35	197	582	132	390	490	391	933	531	1489	1002	487	259	289	450	380	518	M12	453	300	340	320	687	149	538	875	310	708	257	190
G215X	MG.xx.SR.xx.A.1.100	1323	1423	184	823	474	35	197	595	145	390	490	391	933	531	1569	1082	487	259	289	450	380	518	M12	453	300	340	320	791	149	642	942	353	708	257	190
G250X	MG.xx.SR.xx.A.1.50	1363	1463	184	823	474	35	197	550	100	430	530	391	933	531	1212	725	487	284	314	450	380	518	M12	453	300	340	320	533	149	384	624	190	708	257	190
G250X	MG.xx.SR.xx.A.1.65	1363	1463	184	823	474	35	197	567	117	430	530	391	933	531	1456	969	487	284	314	450	380	518	M12	453	300	340	320	636	149	487	845	292	708	257	190
G250X	MG.xx.SR.xx.A.1.80	1363	1463	184	823	474	35	197	582	132	430	530	391	933	531	1489	1002	487	284	314	450	380	518	M12	453	300	340	320	687	149	538	875	310	708	257	190
G250X	MG.xx.SR.xx.A.1.100	1363	1463	184	823	474	35	197	595	145	430	530	391	933	531	1569	1082	487	284	314	450	380	518	M12	453	300	340	320	791	149	642	942	353	708	257	190
G300X	MG.xx.SR.xx.A.1.50	1363	1463	184	823	474	35	197	550	100	430	530	391	933	531	1212	725	487	309	349	450	380	518	M12	453	300	340	320	533	149	384	624	190	708	257	190
G300X	MG.xx.SR.xx.A.1.65	1363	1463	184	823	474	35	197	567	117	430	530	391	933	531	1456	969	487	309	349	450	380	518	M12	453	300	340	320	636	149	487	845	292	708	257	190
G300X	MG.xx.SR.xx.A.1.80	1363	1463	184	823	474	35	197	582	132	430	530	391	933	531	1489	1002	487	309	349	450	380	518	M12	453	300	340	320	687	149	538	875	310	708	257	190
G300X	MG.xx.SR.xx.A.1.100	1363	1463	184	823	474	35	197	595	145	430	530	391	933	531	1569	1082	487	309	349	450	380	518	M12	453	300	340	320	791	149	642	942	353	708	257	190

Approximate values

ELECTRONIC OPERATION

Model	Gas train	Operation	G215X...xR Code	G215X...xR Price €	G250X...xR Code	G250X...xR Price €
MG.PR.SR.xx.A.1.50.EC	2"	PR	03607095C		03607175C	
MG.PR.LR.xx.A.1.50.EC	2"	PR	03607105C		03607185C	
MG.PR.SR.xx.A.1.65.EC	DN65	PR	03607115C		03607195C	
MG.PR.LR.xx.A.1.65.EC	DN65	PR	03607125C		03607205C	
MG.PR.SR.xx.A.1.80.EC	DN80	PR	03607135C		03607215C	
MG.PR.LR.xx.A.1.80.EC	DN80	PR	03607145C		03607225C	
MG.PR.SR.xx.A.1.100.EC	DN100	PR	03607155C		03607235C	
MG.PR.LR.xx.A.1.100.EC	DN100	PR	03607165C		03607245C	
MG.MD.SR.xx.A.1.50.EC	2"	MD(*)	03607095G		03607175G	
MG.MD.LR.xx.A.1.50.EC	2"	MD(*)	03607105G		03607185G	
MG.MD.SR.xx.A.1.65.EC	DN65	MD(*)	03607115G		03607195G	
MG.MD.LR.xx.A.1.65.EC	DN65	MD(*)	03607125G		03607205G	
MG.MD.SR.xx.A.1.80.EC	DN80	MD(*)	03607135G		03607215G	
MG.MD.LR.xx.A.1.80.EC	DN80	MD(*)	03607145G		03607225G	
MG.MD.SR.xx.A.1.100.EC	DN100	MD(*)	03607155G		03607235G	
MG.MD.LR.xx.A.1.100.EC	DN100	MD(*)	03607165G		03607245G	
MG.MD.SR.xx.A.1.50.ES	2"	MD(*)	03607095S		03607175S	
MG.MD.LR.xx.A.1.50.ES	2"	MD(*)	03607105S		03607185S	
MG.MD.SR.xx.A.1.65.ES	DN65	MD(*)	03607115S		03607195S	
MG.MD.LR.xx.A.1.65.ES	DN65	MD(*)	03607125S		03607205S	
MG.MD.SR.xx.A.1.80.ES	DN80	MD(*)	03607135S		03607215S	
MG.MD.LR.xx.A.1.80.ES	DN80	MD(*)	03607145S		03607225S	
MG.MD.SR.xx.A.1.100.ES	DN100	MD(*)	03607155S		03607235S	
MG.MD.LR.xx.A.1.100.ES	DN100	MD(*)	03607165S		03607245S	

(*) In order for the supply to be completed, the burner must be equipped with the respective modulating probe (see accessory table, page 290).

In compliance with:
- **GAR Directive 2016/426/EU**
- **Low Tension Directive 2014/35/UE**
- **Electromagnetic Compatibility Directive 2014/30/UE**
- **Machinery Directive 2006/42/CE**

ELECTRONIC OPERATION

Model	Gas train	Operation	G300X...xR Code	Price €
MG.PR.SR.xx.A.1.50.EC	2"	PR	03607255C	
MG.PR.LR.xx.A.1.50.EC	2"	PR	03607265C	
MG.PR.SR.xx.A.1.65.EC	DN65	PR	03607275C	
MG.PR.LR.xx.A.1.65.EC	DN65	PR	03607285C	
MG.PR.SR.xx.A.1.80.EC	DN80	PR	03607295C	
MG.PR.LR.xx.A.1.80.EC	DN80	PR	03607305C	
MG.PR.SR.xx.A.1.100.EC	DN100	PR	03607315C	
MG.PR.LR.xx.A.1.100.EC	DN100	PR	03607325C	
MG.MD.SR.xx.A.1.50.EC	2"	MD(*)	03607255G	
MG.MD.LR.xx.A.1.50.EC	2"	MD(*)	03607265G	
MG.MD.SR.xx.A.1.65.EC	DN65	MD(*)	03607275G	
MG.MD.LR.xx.A.1.65.EC	DN65	MD(*)	03607285G	
MG.MD.SR.xx.A.1.80.EC	DN80	MD(*)	03607295G	
MG.MD.LR.xx.A.1.80.EC	DN80	MD(*)	03607305G	
MG.MD.SR.xx.A.1.100.EC	DN100	MD(*)	03607315G	
MG.MD.LR.xx.A.1.100.EC	DN100	MD(*)	03607325G	
MG.MD.SR.xx.A.1.50.ES	2"	MD(*)	03607255S	
MG.MD.LR.xx.A.1.50.ES	2"	MD(*)	03607265S	
MG.MD.SR.xx.A.1.65.ES	DN65	MD(*)	03607275S	
MG.MD.LR.xx.A.1.65.ES	DN65	MD(*)	03607285S	
MG.MD.SR.xx.A.1.80.ES	DN80	MD(*)	03607295S	
MG.MD.LR.xx.A.1.80.ES	DN80	MD(*)	03607305S	
MG.MD.SR.xx.A.1.100.ES	DN100	MD(*)	03607315S	
MG.MD.LR.xx.A.1.100.ES	DN100	MD(*)	03607325S	

(*) In order for the supply to be completed, the burner must be equipped with the respective modulating probe (see accessory table, page 290).

In compliance with:
- **GAR Directive 2016/426/EU**
- **Low Tension Directive 2014/35/UE**
- **Electromagnetic Compatibility Directive 2014/30/UE**
- **Machinery Directive 2006/42/CE**

G215X G250X G300X...xR

GAS/LIGHT OIL

G215X PR-MD...xR

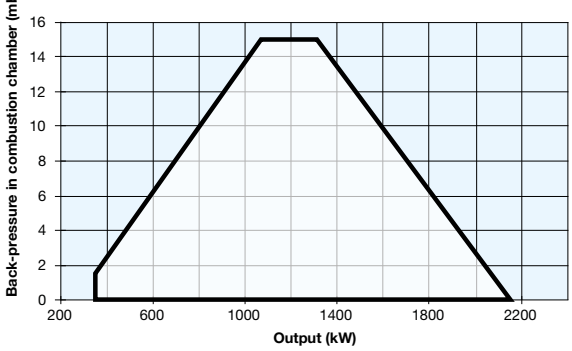

G250X PR-MD...xR

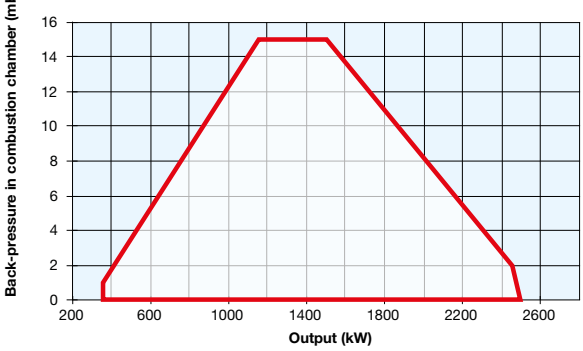

G300X PR-MD...xR

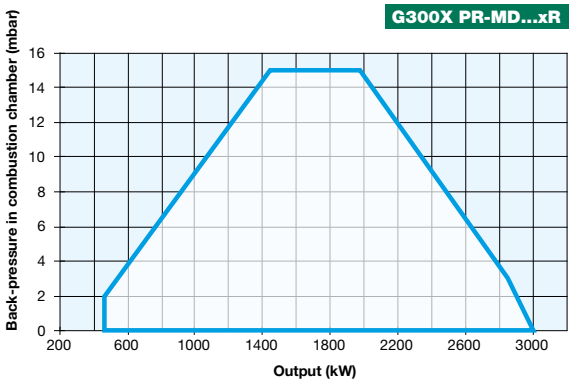

G215X PR-MD...xR

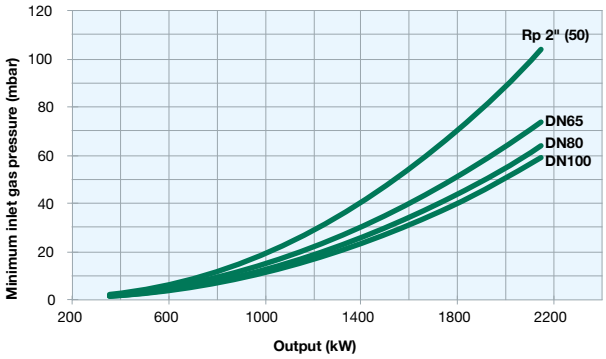

G250X PR-MD...xR

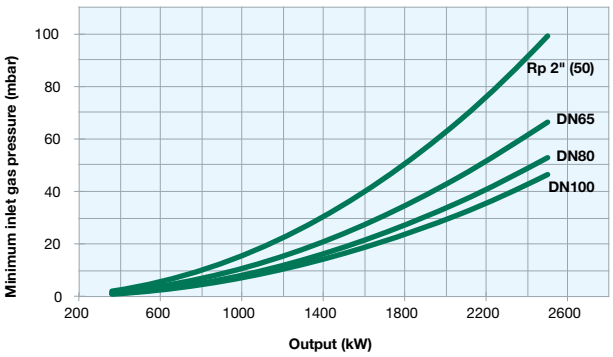

G300X PR-MD...xR

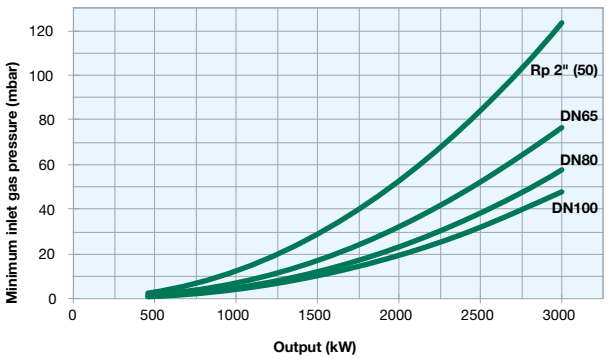

Attention: the graph shows the value of the gas output (kW) against the corresponding pressure without the combustion chamber back pressure. To know the minimum gas pressure at gas train, in order to get the gas output, it is necessary to add the boiler back pressure to the value read on the curve.

NEW

GAS/LIGHT OIL

CIB UNIGAS < 80 mg/kWh CLASS 3 Low NOx

H365X H440X H500X...xR cinquecento SERIES

The new H type CINQUECENTO series **Low NO_x** burners **Class 3 (< 80 mg/kWh)**, made in aluminum housing with a backward curved centrifugal impeller is studied and developed to get high performance and efficiency combined with low emissions.
In this manner these series can burn the two flues separately. This is possible because these burners are equipped with an independent electric motor for the activation of the oil pump. As a consequence during gas firing, the oil pump motor does not operate and remains off.
These burners are equipped with a high performance combustion head, designed to achieve an high irradiating flame when they run on natural gas. Instead, when they run on light oil, they are equipped with a by-pass nozzle which, using a pressure regulator, can reach a modulating ratio of 1:3. Therefore, the burners are provided with an UV photocell to control the flame during the operation.

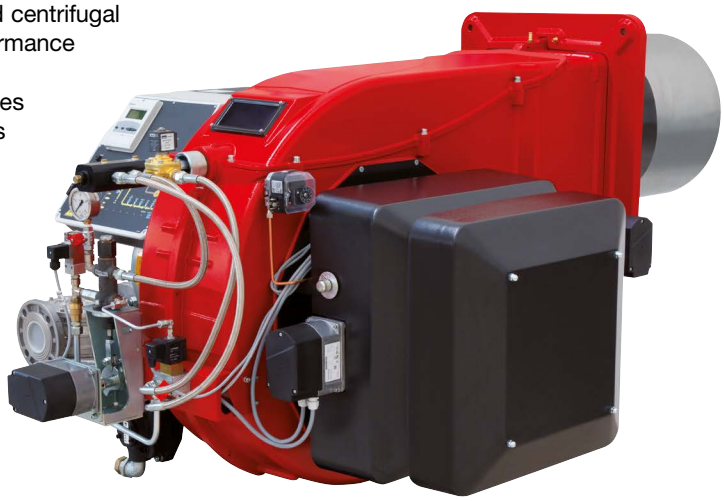

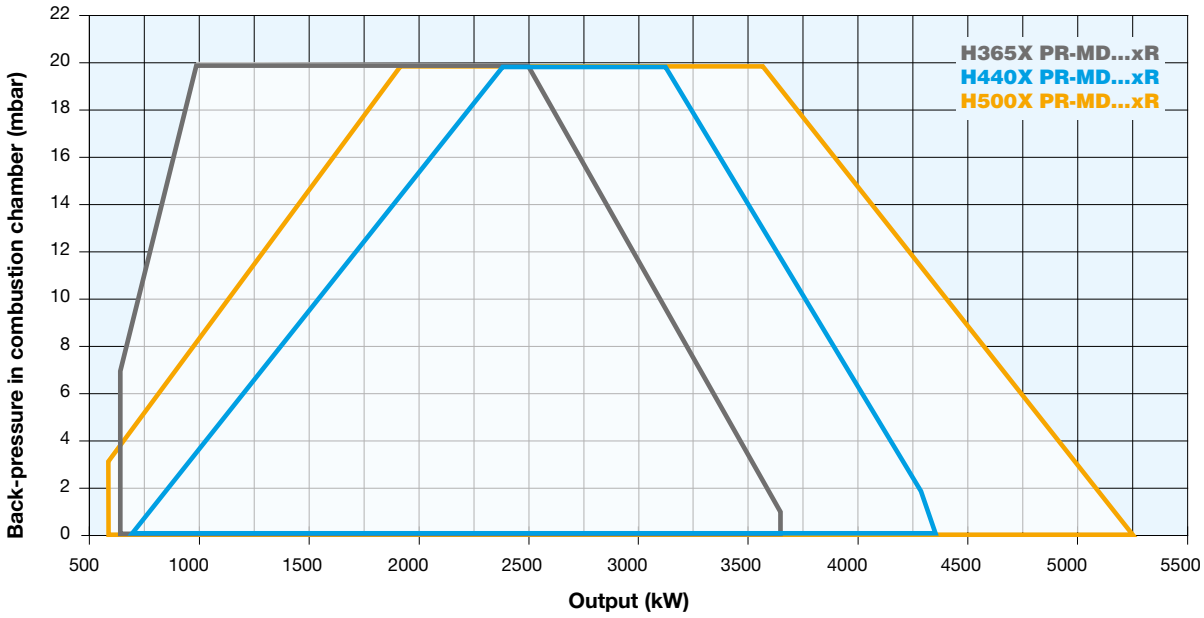

TECHNICAL DETAILS

Type	Model	Power kW		Auxiliary electrical power supply	Motor electrical power supply	Fan motor	Pump motor	Gas connections	Noise level
		min.	max.			kW	kW	Rp	dBA
H365X	MG.xx.xR.xx.A.1.xxx	650	3.650	230 V 1N AC 50 Hz	400 V 3 AC 50 Hz	7,5	1,1	2" - DN65 - DN80 - DN100	< 85
H440X	MG.xx.xR.xx.A.1.xxx	700	4.400	230 V 1N AC 50 Hz	400 V 3 AC 50 Hz	9,2	1,5	2" - DN65 - DN80 - DN100	< 85
H500X	MG.xx.xR.xx.A.1.xxx	580	5.250	230 V 1N AC 50 Hz	400 V 3 AC 50 Hz	9,2	1,5	2" - DN65 - DN80 - DN100	< 85

For the configuration of the gas train, see pages 116-117.

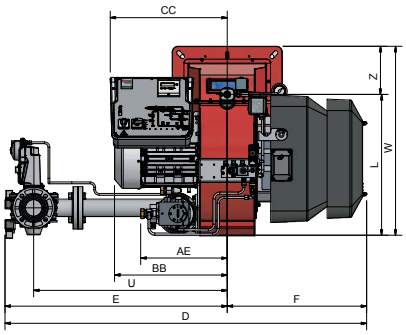

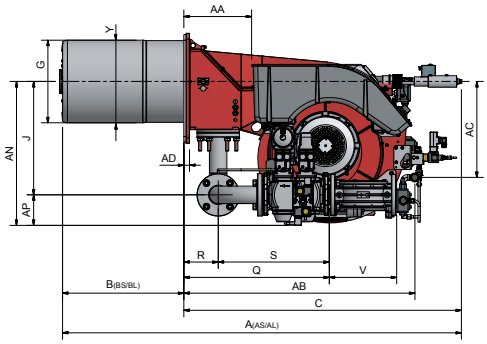

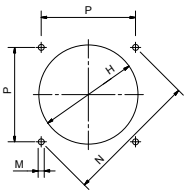

Suggested boiler drilling

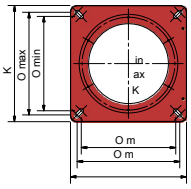

Burner flange

Type	Packaging dimensions (mm)			
	l	p	h	kg
H365X	1890	1290	1220	360
H440X	1890	1290	1220	410
H500X	1890	1290	1220	415

Approximate values (regarding model with gas train DN 80)

Type	Model	Overall dimensions (mm)																																	
		AS	AL	AA	AB	AC	AD	AE	AN	AP	BS	BL	BB	C	CC	D	E	F	G	H	J	K	L	M	N	O min.	O max.	P	Q	R	S	U	V	W	Y	Z
H365X	MG.xx.xR.xx.A.1.50	1640	1740	295	1024	419	25	210	595	100	430	530	471	1210	511	1554	946	608	284	316	494	540	586	M14	552	390	430	390	764	150	613	845	190	856	284	270
H365X	MG.xx.xR.xx.A.1.65	1640	1740	295	1024	419	25	210	611	117	430	530	471	1210	511	1577	969	608	284	316	494	540	586	M14	552	390	430	390	634	150	484	845	294	856	284	270
H365X	MG.xx.xR.xx.A.1.80	1640	1740	295	1024	419	25	210	626	132	430	530	471	1210	511	1610	1002	608	284	316	494	540	586	M14	552	390	430	390	686	150	535	875	313	856	284	270
H365X	MG.xx.xR.xx.A.1.100	1640	1740	295	1024	419	25	210	639	145	430	530	471	1210	511	1690	1082	608	284	316	494	540	586	M14	552	390	430	390	791	150	642	942	353	856	284	270
H440X	MG.xx.xR.xx.A.1.50	1640	1740	295	1024	419	25	210	595	100	430	530	488	1210	511	1554	946	608	328	370	494	540	586	M14	552	390	430	390	764	150	613	845	190	856	328	270
H440X	MG.xx.xR.xx.A.1.65	1640	1740	295	1024	419	25	210	611	117	430	530	488	1210	511	1577	969	608	328	370	494	540	586	M14	552	390	430	390	634	150	484	845	294	856	328	270
H440X	MG.xx.xR.xx.A.1.80	1640	1740	295	1024	419	25	210	626	132	430	530	488	1210	511	1610	1002	608	328	370	494	540	586	M14	552	390	430	390	686	150	535	875	313	856	328	270
H440X	MG.xx.xR.xx.A.1.100	1640	1740	295	1024	419	25	210	639	145	430	530	488	1210	511	1690	1082	608	328	370	494	540	586	M14	552	390	430	390	791	150	642	942	353	856	328	270
H500X	MG.xx.xR.xx.A.1.50	1640	1740	295	1024	419	25	217	595	100	430	530	488	1210	511	1554	946	608	360	410	494	540	586	M14	552	390	430	390	764	150	613	845	190	856	356	270
H500X	MG.xx.xR.xx.A.1.65	1640	1740	295	1024	419	25	217	611	117	430	530	488	1210	511	1577	969	608	360	410	494	540	586	M14	552	390	430	390	634	150	484	845	294	856	356	270
H500X	MG.xx.xR.xx.A.1.80	1640	1740	295	1024	419	25	217	626	132	430	530	488	1210	511	1610	1002	608	360	410	494	540	586	M14	552	390	430	390	686	150	535	875	313	856	356	270
H500X	MG.xx.xR.xx.A.1.100	1640	1740	295	1024	419	25	217	639	145	430	530	488	1210	511	1690	1082	608	360	410	494	540	586	M14	552	390	430	390	791	150	642	942	353	856	356	270

Approximate values

ELECTRONIC OPERATION

Model	Gas train	Operation	H365X...xR Code	H365X...xR Price €	H440X...xR Code	H440X...xR Price €
MG.PR.SR.xx.A.1.50.EC	2"	PR	03507135C		03507215C	
MG.PR.LR.xx.A.1.50.EC	2"	PR	03507145C		03507225C	
MG.PR.SR.xx.A.1.65.EC	DN65	PR	03507155C		03507235C	
MG.PR.LR.xx.A.1.65.EC	DN65	PR	03507165C		03507245C	
MG.PR.SR.xx.A.1.80.EC	DN80	PR	03507175C		03507255C	
MG.PR.LR.xx.A.1.80.EC	DN80	PR	03507185C		03507265C	
MG.PR.SR.xx.A.1.100.EC	DN100	PR	03507195C		03507275C	
MG.PR.LR.xx.A.1.100.EC	DN100	PR	03507205C		03507285C	
MG.MD.SR.xx.A.1.50.EC	2"	MD(*)	03507135G		03507215G	
MG.MD.LR.xx.A.1.50.EC	2"	MD(*)	03507145G		03507225G	
MG.MD.SR.xx.A.1.65.EC	DN65	MD(*)	03507155G		03507235G	
MG.MD.LR.xx.A.1.65.EC	DN65	MD(*)	03507165G		03507245G	
MG.MD.SR.xx.A.1.80.EC	DN80	MD(*)	03507175G		03507255G	
MG.MD.LR.xx.A.1.80.EC	DN80	MD(*)	03507185G		03507265G	
MG.MD.SR.xx.A.1.100.EC	DN100	MD(*)	03507195G		03507275G	
MG.MD.LR.xx.A.1.100.EC	DN100	MD(*)	03507205G		03507285G	
MG.MD.SR.xx.A.1.50.ES	2"	MD(*)	03507135S		03507215S	
MG.MD.LR.xx.A.1.50.ES	2"	MD(*)	03507145S		03507225S	
MG.MD.SR.xx.A.1.65.ES	DN65	MD(*)	03507155S		03507235S	
MG.MD.LR.xx.A.1.65.ES	DN65	MD(*)	03507165S		03507245S	
MG.MD.SR.xx.A.1.80.ES	DN80	MD(*)	03507175S		03507255S	
MG.MD.LR.xx.A.1.80.ES	DN80	MD(*)	03507185S		03507265S	
MG.MD.SR.xx.A.1.100.ES	DN100	MD(*)	03507195S		03507275S	
MG.MD.LR.xx.A.1.100.ES	DN100	MD(*)	03507205S		03507285S	

(*) In order for the supply to be completed, the burner must be equipped with the respective modulating probe (see accessory table, page 290).

In compliance with:
- **GAR Directive 2016/426/EU**
- **Low Tension Directive 2014/35/UE**
- **Electromagnetic Compatibility Directive 2014/30/UE**
- **Machinery Directive 2006/42/CE**

ELECTRONIC OPERATION

Model	Gas train	Operation	H500X...xR Code	Price €
MG.PR.SR.xx.A.1.50.EC	2"	PR	03507295C	
MG.PR.LR.xx.A.1.50.EC	2"	PR	03507305C	
MG.PR.SR.xx.A.1.65.EC	DN65	PR	03507315C	
MG.PR.LR.xx.A.1.65.EC	DN65	PR	03507325C	
MG.PR.SR.xx.A.1.80.EC	DN80	PR	03507335C	
MG.PR.LR.xx.A.1.80.EC	DN80	PR	03507345C	
MG.PR.SR.xx.A.1.100.EC	DN100	PR	03507355C	
MG.PR.LR.xx.A.1.100.EC	DN100	PR	03507365C	
MG.MD.SR.xx.A.1.50.EC	2"	MD(*)	03507295G	
MG.MD.LR.xx.A.1.50.EC	2"	MD(*)	03507305G	
MG.MD.SR.xx.A.1.65.EC	DN65	MD(*)	03507315G	
MG.MD.LR.xx.A.1.65.EC	DN65	MD(*)	03507325G	
MG.MD.SR.xx.A.1.80.EC	DN80	MD(*)	03507335G	
MG.MD.LR.xx.A.1.80.EC	DN80	MD(*)	03507345G	
MG.MD.SR.xx.A.1.100.EC	DN100	MD(*)	03507355G	
MG.MD.LR.xx.A.1.100.EC	DN100	MD(*)	03507365G	
MG.MD.SR.xx.A.1.50.ES	2"	MD(*)	03507295S	
MG.MD.LR.xx.A.1.50.ES	2"	MD(*)	03507305S	
MG.MD.SR.xx.A.1.65.ES	DN65	MD(*)	03507315S	
MG.MD.LR.xx.A.1.65.ES	DN65	MD(*)	03507325S	
MG.MD.SR.xx.A.1.80.ES	DN80	MD(*)	03507335S	
MG.MD.LR.xx.A.1.80.ES	DN80	MD(*)	03507345S	
MG.MD.SR.xx.A.1.100.ES	DN100	MD(*)	03507355S	
MG.MD.LR.xx.A.1.100.ES	DN100	MD(*)	03507365S	

(*) In order for the supply to be completed, the burner must be equipped with the respective modulating probe (see accessory table, page 290).

In compliance with:
- **GAR Directive 2016/426/EU**
- **Low Tension Directive 2014/35/UE**
- **Electromagnetic Compatibility Directive 2014/30/UE**
- **Machinery Directive 2006/42/CE**

H365X H440X H500X...xR cinquecento SERIES

H365X PR-MD...xR

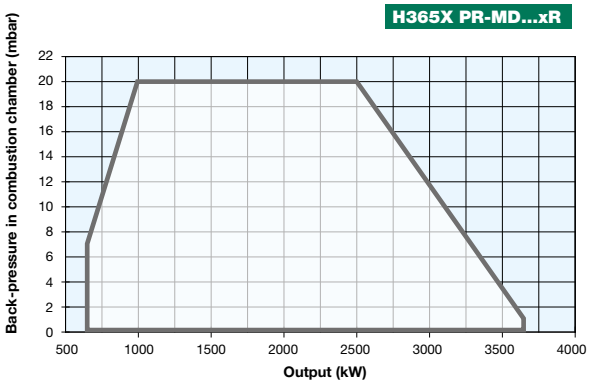

H440X PR-MD...xR

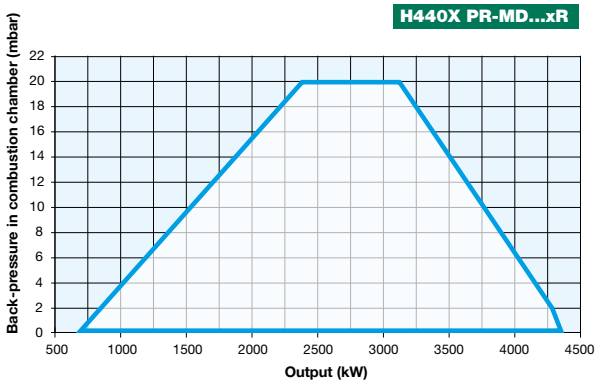

H500X PR-MD...xR

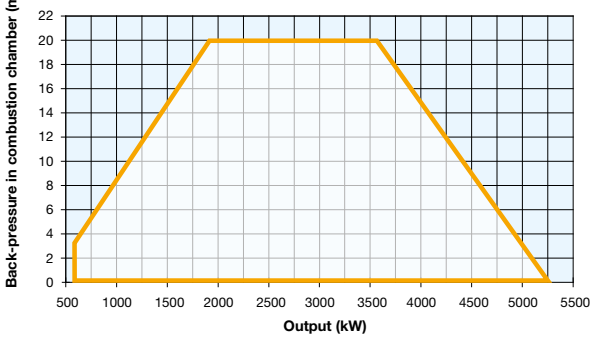

H365X PR-MD...xR

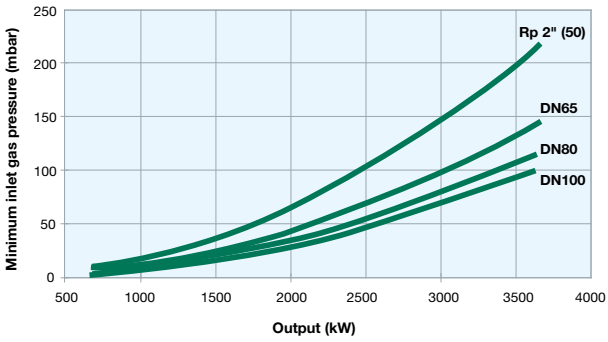

H440X PR-MD...xR

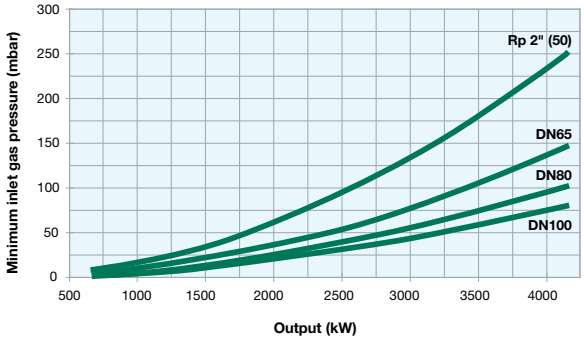

H500X PR-MD...xR

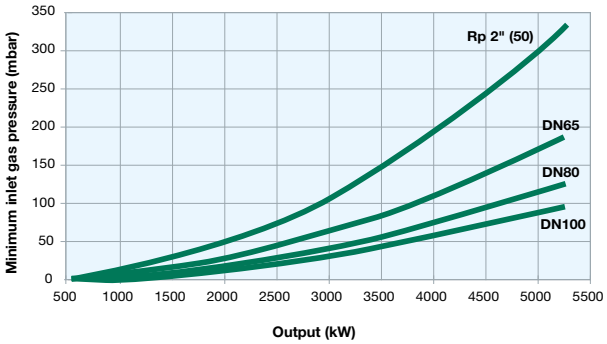

Attention: the graph shows the value of the gas output (kW) against the corresponding pressure without the combustion chamber back pressure. To know the minimum gas pressure at gas train, in order to get the gas output, it is necessary to add the boiler back pressure to the value read on the curve.

cinquecento SERIES K590X K750X...xR

NEW

GAS/LIGHT OIL

The new K type CINQUECENTO series **Low NO_x** burners **Class 3 (< 80 mg/kWh)**), made in aluminum housing with a backward curved centrifugal impeller is studied and developed to get high performance and efficiency combined with low emissions.
In this manner these series can burn the two flues separately. This is possible because these burners are equipped with an independent electric motor for the activation of the oil pump. As a consequence during gas firing, the oil pump motor does not operate and remains off.
These burners are equipped with a high performance combustion head, designed to achieve an high irradiating flame when they run on natural gas. Instead, when they run on light oil, they are equipped with a by-pass nozzle which, using a pressure regulator, can reach a modulating ratio of 1:3.
Therefore, the burners are provided with an UV photocell to control the flame during the operation.

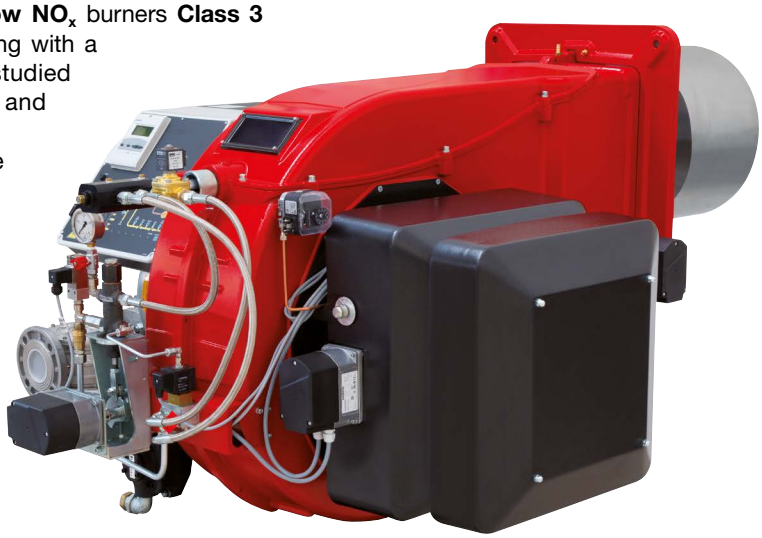

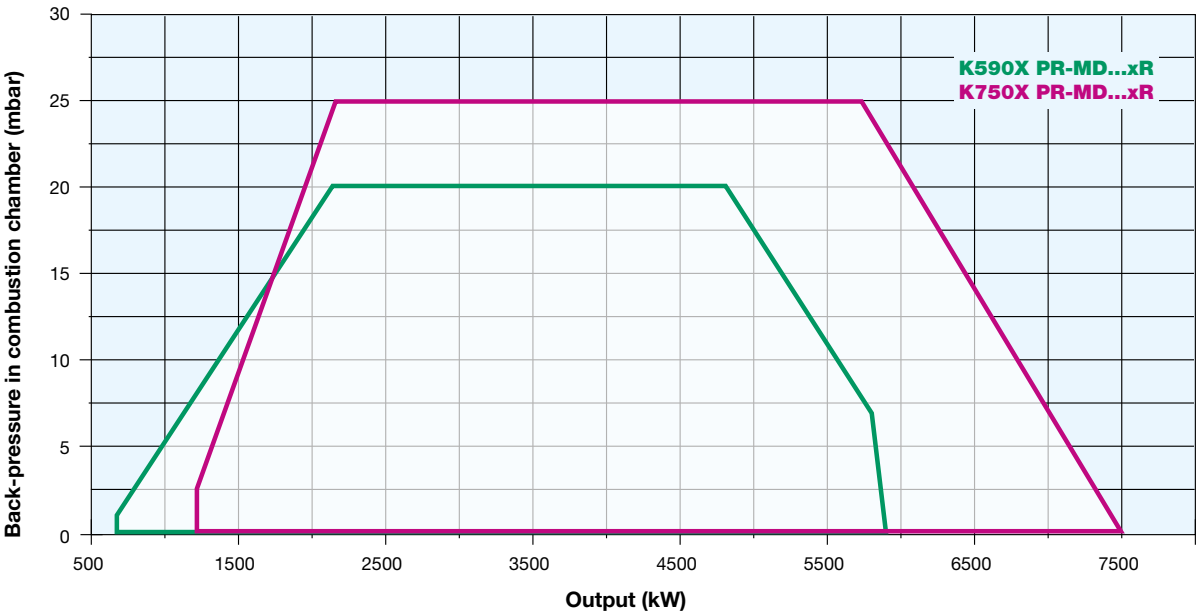

K590X K750X...xR cinquecento SERIES

TECHNICAL DETAILS

Type	Model	Power kW		Auxiliary electrical power supply	Motor electrical power supply	Fan motor	Pump motor	Gas connections	Noise level
		min.	max.			kW	kW		dBA
K590X	MG.xx.xR.xx.A.1.xxx	670	5.900	230 V 1N AC 50 Hz	400 V 3 AC 50 Hz	15,0	1,5	DN65 - DN80 - DN100 - DN125	< 85
K750X	MG.xx.xR.xx.A.1.xxx	860	7.500	230 V 1N AC 50 Hz	400 V 3 AC 50 Hz	15,0	2,2	DN65 - DN80 - DN100 - DN125	< 85

For the configuration of the gas train, see pages 116-117.

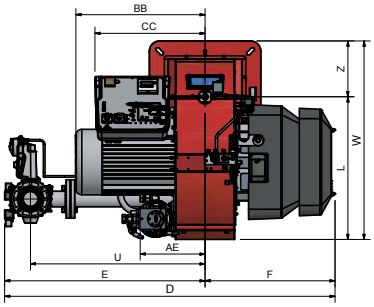

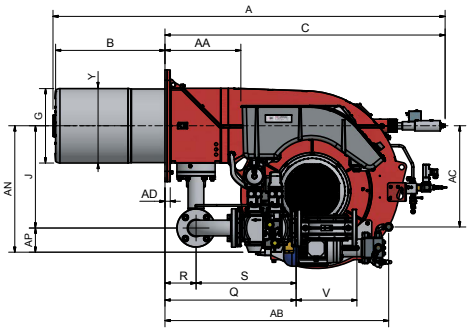

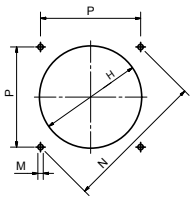

Suggested boiler drilling

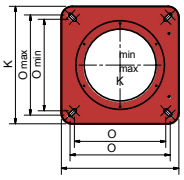

Burner flange

Type	Packaging dimensions (mm)			
	l	p	h	kg
K590X	2180	1450	1220	495
K750X	2180	1450	1220	530

Approximate values

Type	Model	Overall dimensions (mm)																																	
		AS	AL	AA	AB	AC	AD	AE	AN	AP	BS	BL	BB	C	CC	D	E	F	G	H	J	K	L	M	N	O		P	Q	R	S	U	V	W	Y	Z
																										min.	max.									
K590X	MG.xx.xR.xx.A.1.65	1785	1885	366	1082	670	25	314	611	117	430	530	626	1355	524	1595	969	626	360	400	494	540	690	M16	651	420	460	460	636	150	487	845	292	960	356	270
K590X	MG.xx.xR.xx.A.1.80	1785	1885	366	1082	670	25	314	626	132	430	530	626	1355	524	1628	1002	626	360	400	494	540	690	M16	651	420	460	460	687	150	538	875	313	960	356	270
K590X	MG.xx.xR.xx.A.1.100	1785	1885	366	1082	670	25	314	639	145	430	530	626	1355	524	1708	1082	626	360	400	494	540	690	M16	651	420	460	460	791	150	642	942	353	960	356	270
K590X	MG.xx.xR.xx.A.1.125	1785	1885	366	1082	670	25	314	738	175	430	530	626	1355	524	1973	1347	626	360	400	562	540	690	M16	651	420	460	460	904	150	754	1192	479	960	356	270
K750X	MG.xx.xR.xx.A.1.65	1785	1885	366	1073	670	25	300	611	117	430	530	626	1355	524	1595	969	626	419	470	494	540	690	M16	651	420	460	460	636	150	487	845	292	960	336	270
K750X	MG.xx.xR.xx.A.1.80	1785	1885	366	1073	670	25	300	626	132	430	530	626	1355	524	1628	1002	626	419	470	494	540	690	M16	651	420	460	460	687	150	538	875	313	960	336	270
K750X	MG.xx.xR.xx.A.1.100	1785	1885	366	1073	670	25	300	639	145	430	530	626	1355	524	1708	1082	626	419	470	494	540	690	M16	651	420	460	460	791	150	642	942	353	960	336	270
K750X	MG.xx.xR.xx.A.1.125	1785	1885	366	1073	670	25	300	738	175	430	530	626	1355	524	1973	1347	626	419	470	562	540	690	M16	651	420	460	460	904	150	754	1192	479	960	336	270

Approximate values

ELECTRONIC OPERATION

Model	Gas train	Operation	K590X...xR Code	K590X...xR Price €	K750X...xR Code	K750X...xR Price €
MG.PR.SR.xx.A.1.65.EC	DN65	PR	03407125C		03407205C	
MG.PR.LR.xx.A.1.65.EC	DN65	PR	03407135C		03407215C	
MG.PR.SR.xx.A.1.80.EC	DN80	PR	03407145C		03407225C	
MG.PR.LR.xx.A.1.80.EC	DN80	PR	03407155C		03407235C	
MG.PR.SR.xx.A.1.100.EC	DN100	PR	03407165C		03407245C	
MG.PR.LR.xx.A.1.100.EC	DN100	PR	03407175C		03407255C	
MG.PR.SR.xx.A.1.125.EC	DN125	PR	03407185C		03407265C	
MG.PR.LR.xx.A.1.125.EC	DN125	PR	03407195C		03407275C	
MG.MD.SR.xx.A.1.65.EC	DN65	MD(*)	03407125G		03407205G	
MG.MD.LR.xx.A.1.65.EC	DN65	MD(*)	03407135G		03407215G	
MG.MD.SR.xx.A.1.80.EC	DN80	MD(*)	03407145G		03407225G	
MG.MD.LR.xx.A.1.80.EC	DN80	MD(*)	03407155G		03407235G	
MG.MD.SR.xx.A.1.100.EC	DN100	MD(*)	03407165G		03407245G	
MG.MD.LR.xx.A.1.100.EC	DN100	MD(*)	03407175G		03407255G	
MG.MD.SR.xx.A.1.125.EC	DN125	MD(*)	03407185G		03407265G	
MG.MD.LR.xx.A.1.125.EC	DN125	MD(*)	03407195G		03407275G	
MG.MD.SR.xx.A.1.65.ES	DN65	MD(*)	03407125S		03407205S	
MG.MD.LR.xx.A.1.65.ES	DN65	MD(*)	03407135S		03407215S	
MG.MD.SR.xx.A.1.80.ES	DN80	MD(*)	03407145S		03407225S	
MG.MD.LR.xx.A.1.80.ES	DN80	MD(*)	03407155S		03407235S	
MG.MD.SR.xx.A.1.100.ES	DN100	MD(*)	03407165S		03407245S	
MG.MD.LR.xx.A.1.100.ES	DN100	MD(*)	03407175S		03407255S	
MG.MD.SR.xx.A.1.125.ES	DN125	MD(*)	03407185S		03407265S	
MG.MD.LR.xx.A.1.125.ES	DN125	MD(*)	03407195S		03407275S	

(*) In order for the supply to be completed, the burner must be equipped with the respective modulating probe (see accessory table, page 290).

In compliance with:
- **GAR Directive 2016/426/EU**
- **Low Tension Directive 2014/35/UE**
- **Electromagnetic Compatibility Directive 2014/30/UE**
- **Machinery Directive 2006/42/CE**

K590X K750X...xR cinquecento SERIES

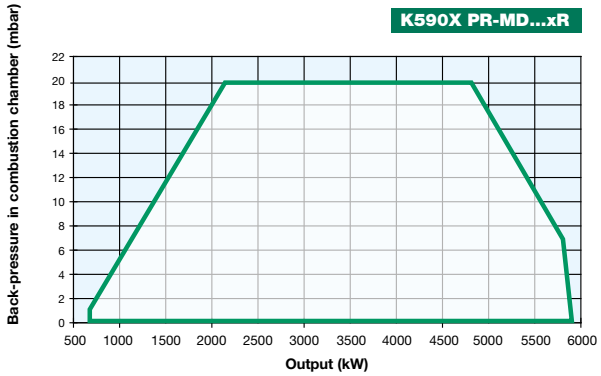

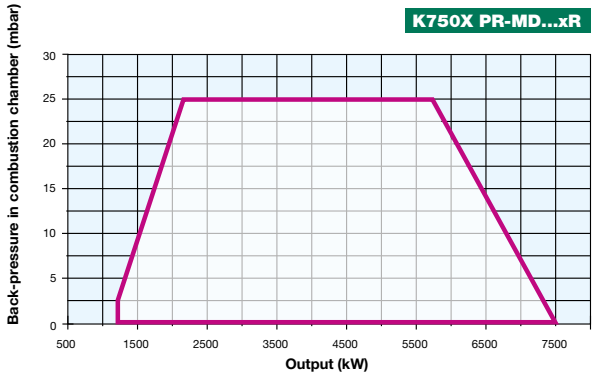

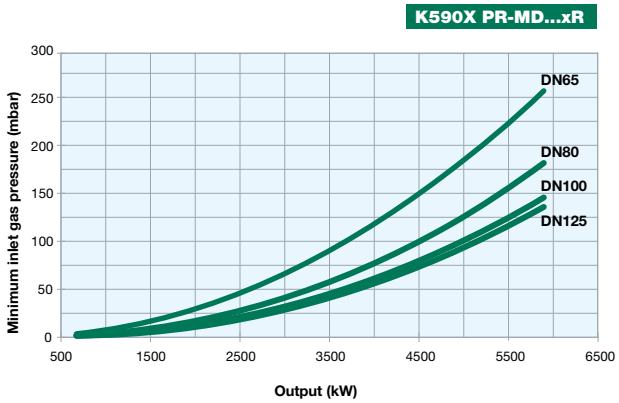

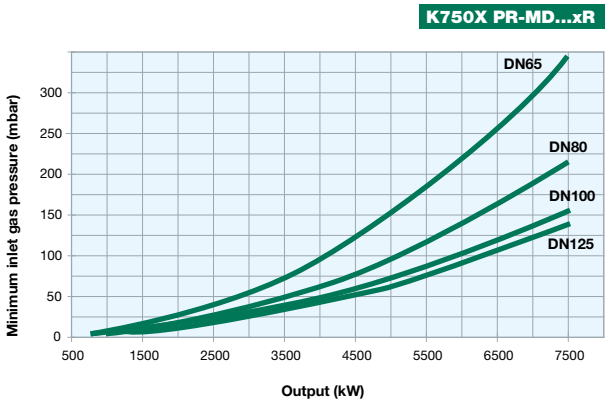

Attention: the graph shows the value of the gas output (kW) against the corresponding pressure without the combustion chamber back pressure. To know the minimum gas pressure at gas train, in order to get the gas output, it is necessary to add the boiler back pressure to the value read on the curve.

mille SERIES N880X N925X N1060X...xR

NEW

GAS/LIGHT OIL

The new N type MILLE series **Low NO_x** burners **Class 3 (< 80 mg/kWh)**, made in aluminum housing with a backward curved centrifugal impeller is studied and developed to get high performance and efficiency combined with low emissions.
In this manner these series can burn the two flues separately. This is possible because these burners are equipped with an independent electric motor for the activation of the oil pump. As a consequence during gas firing, the oil pump motor does not operate and remains off.
These burners are equipped with a high performance combustion head, designed to achieve an high irradiating flame when they run on natural gas. Instead, when they run on light oil, they are equipped with a by-pass nozzle which, using a pressure regulator, can reach a modulating ratio of 1:3.
Therefore, the burners are provided with an UV photocell to control the flame during the operation.

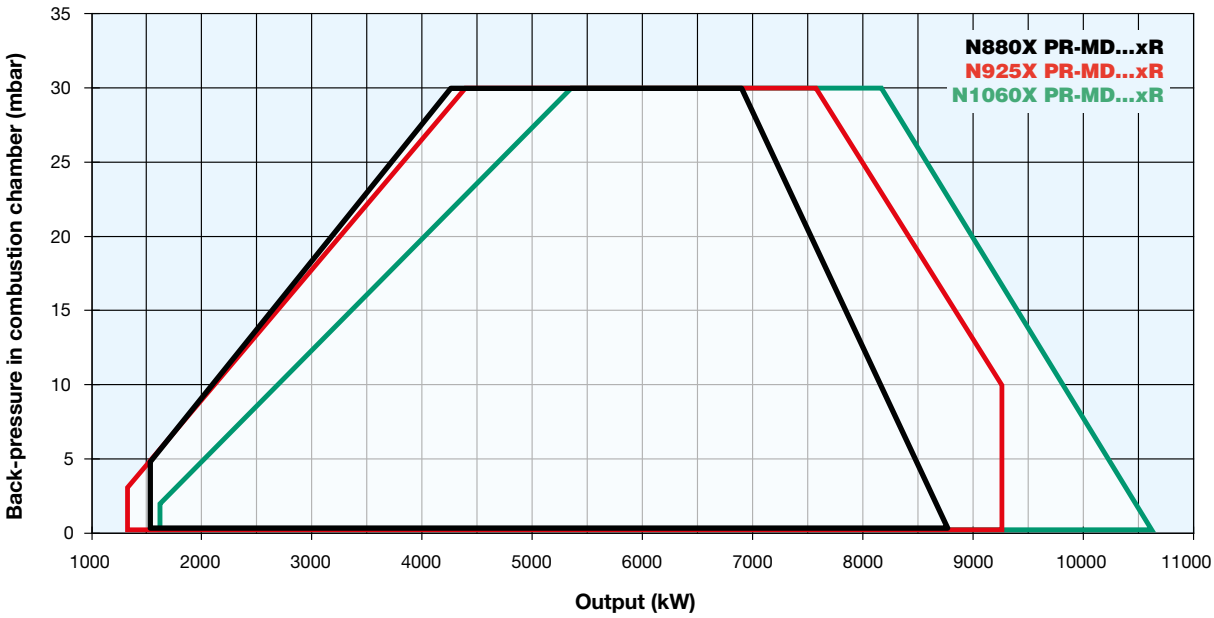

N880X N925X N1060X...xR mille SERIES

TECHNICAL DETAILS

Type	Model	Power kW		Auxiliary electrical power supply	Motor electrical power supply	Fan motor	Pump motor	Gas connections	Noise level
		min.	max.			kW	kW		dBA
N880X	MG.xx.xR.xx.A.1.xxx	1.500	8.800	230 V 1N AC 50 Hz	400 V 3 AC 50 Hz	18,0	3,0	DN80 - DN100 - DN125	< 82,2
N925X	MG.xx.xR.xx.A.1.xxx	1.090	9.250	230 V 1N AC 50 Hz	400 V 3 AC 50 Hz	22,0	3,0	DN80 - DN100 - DN125	< 85,6
N1060X	MG.xx.xR.xx.A.1.xxx	1.550	10.600	230 V 1N AC 50 Hz	400 V 3 AC 50 Hz	30,0	4,0	DN80 - DN100 - DN125	< 85,6

For the configuration of the gas train, see pages 116-117.

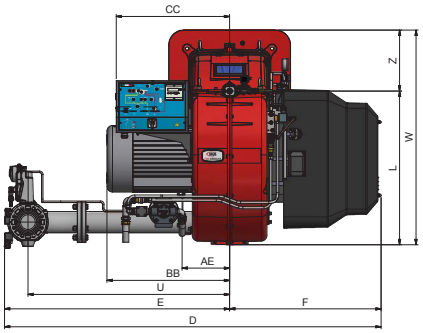

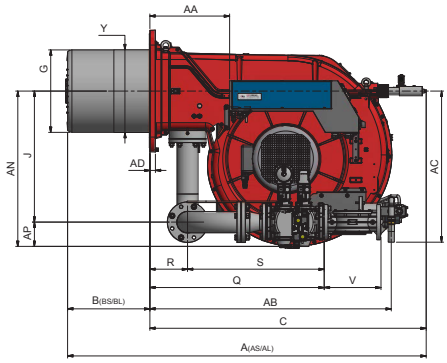

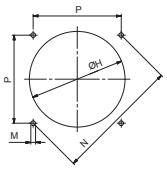

Suggested boiler drilling

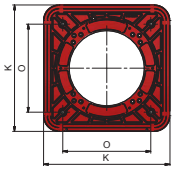

Burner flange

Type	Packaging dimensions (mm)			
	l	p	h	kg
N880X	2300	1720	1410	700
N925X	2300	1720	1410	700
N1060X	2300	1720	1410	700

Approximate values

Type	Model	Overall dimensions (mm)																																
		AS	AL	AA	AB	AC	AD	AE	AN	AP	BS	BL	BB	C	CC	D	E	F	G	H	J	K	L	M	N	O	P	Q	R	S	U	V	W	Y	Z
																										min. max.									
N880X	MG.xx.xR.xx.A.1.80	1850	1950	384	1307	720	35	257	841	132	445	545	648	1345	684	1842	1219	623	446	496	709	660	831	M16	651	460 460	460	944	204	740	1092	310	1161	399	330
N880X	MG.xx.xR.xx.A.1.100	1850	1950	384	1307	720	35	257	854	145	445	545	664	1345	684	1858	1235	623	446	496	709	660	831	M16	651	460 460	460	848	204	644	1092	350	1161	399	330
N880X	MG.xx.xR.xx.A.1.125	1850	1950	384	1307	720	35	257	884	175	445	545	664	1345	684	1972	1349	623	446	496	709	660	831	M16	651	460 460	460	958	204	754	1192	478	1161	399	330
N925X	MG.xx.xR.xx.A.1.80	1850	1950	384	1307	720	35	257	841	132	445	545	664	1345	684	1842	1219	623	446	496	709	660	831	M16	651	460 460	460	944	204	740	1092	310	1161	399	330
N925X	MG.xx.xR.xx.A.1.100	1850	1950	384	1307	720	35	257	854	145	445	545	664	1345	684	1858	1235	623	446	496	709	660	831	M16	651	460 460	460	848	204	644	1092	350	1161	399	330
N925X	MG.xx.xR.xx.A.1.125	1850	1950	384	1307	720	35	257	884	175	445	545	664	1345	684	1972	1349	623	446	496	709	660	831	M16	651	460 460	460	958	204	754	1192	478	1161	399	330
N1060X	MG.xx.xR.xx.A.1.80	1850	1950	384	1307	720	35	257	841	132	445	545	664	1345	684	1842	1219	623	489	539	709	660	831	M16	651	460 460	460	944	204	740	1092	310	1161	399	330
N1060X	MG.xx.xR.xx.A.1.100	1850	1950	384	1307	720	35	257	854	145	445	545	664	1345	684	1858	1235	623	489	539	709	660	831	M16	651	460 460	460	848	204	644	1092	350	1161	399	330
N1060X	MG.xx.xR.xx.A.1.125	1850	1950	384	1307	720	35	257	884	175	445	545	664	1345	684	1972	1349	623	489	539	709	660	831	M16	651	460 460	460	958	204	754	1192	478	1161	399	330

Approximate values

ELECTRONIC OPERATION

Model	Gas train	Operation	N880X...xR Code	N880X...xR Price €	N925X...xR Code	N925X...xR Price €
MG.PR.SR.xx.A.1.80.EC	DN80	PR	02307395C		02307475C	
MG.PR.LR.xx.A.1.80.EC	DN80	PR	02307405C		02307485C	
MG.PR.SR.xx.A.1.100.EC	DN100	PR	02307415C		02307495C	
MG.PR.LR.xx.A.1.100.EC	DN100	PR	02307425C		02307505C	
MG.PR.SR.xx.A.1.125.EC	DN125	PR	02307435C		02307515C	
MG.PR.LR.xx.A.1.125.EC	DN125	PR	02307445C		02307525C	
MG.MD.SR.xx.A.1.80.EC	DN80	MD(*)	02307395G		02307475G	
MG.MD.LR.xx.A.1.80.EC	DN80	MD(*)	02307405G		02307485G	
MG.MD.SR.xx.A.1.100.EC	DN100	MD(*)	02307415G		02307495G	
MG.MD.LR.xx.A.1.100.EC	DN100	MD(*)	02307425G		02307505G	
MG.MD.SR.xx.A.1.125.EC	DN125	MD(*)	02307435G		02307515G	
MG.MD.LR.xx.A.1.125.EC	DN125	MD(*)	02307445G		02307525G	
MG.MD.SR.xx.A.1.80.ES	DN80	MD(*)	02307395S		02307475S	
MG.MD.LR.xx.A.1.80.ES	DN80	MD(*)	02307405S		02307485S	
MG.MD.SR.xx.A.1.100.ES	DN100	MD(*)	02307415S		02307495S	
MG.MD.LR.xx.A.1.100.ES	DN100	MD(*)	02307425S		02307505S	
MG.MD.SR.xx.A.1.125.ES	DN125	MD(*)	02307435S		02307515S	
MG.MD.LR.xx.A.1.125.ES	DN125	MD(*)	02307445S		02307525S	

Model	Gas train	Operation	N1060X...xR Code	N1060X...xR Price €
MG.PR.SR.xx.A.1.80.EC	DN80	PR	02307535C	
MG.PR.LR.xx.A.1.80.EC	DN80	PR	02307545C	
MG.PR.SR.xx.A.1.100.EC	DN100	PR	02307555C	
MG.PR.LR.xx.A.1.100.EC	DN100	PR	02307565C	
MG.PR.SR.xx.A.1.125.EC	DN125	PR	02307575C	
MG.PR.LR.xx.A.1.125.EC	DN125	PR	02307585C	
MG.MD.SR.xx.A.1.80.EC	DN80	MD(*)	02307535G	
MG.MD.LR.xx.A.1.80.EC	DN80	MD(*)	02307545G	
MG.MD.SR.xx.A.1.100.EC	DN100	MD(*)	02307555G	
MG.MD.LR.xx.A.1.100.EC	DN100	MD(*)	02307565G	
MG.MD.SR.xx.A.1.125.EC	DN125	MD(*)	02307575G	
MG.MD.LR.xx.A.1.125.EC	DN125	MD(*)	02307585G	
MG.MD.SR.xx.A.1.80.ES	DN80	MD(*)	02307535S	
MG.MD.LR.xx.A.1.80.ES	DN80	MD(*)	02307545S	
MG.MD.SR.xx.A.1.100.ES	DN100	MD(*)	02307555S	
MG.MD.LR.xx.A.1.100.ES	DN100	MD(*)	02307565S	
MG.MD.SR.xx.A.1.125.ES	DN125	MD(*)	02307575S	
MG.MD.LR.xx.A.1.125.ES	DN125	MD(*)	02307585S	

(*) In order for the supply to be completed, the burner must be equipped with the respective modulating probe (see accessory table, page 290).

In compliance with:
- **GAR Directive 2016/426/EU**
- **Low Tension Directive 2014/35/UE**
- **Electromagnetic Compatibility Directive 2014/30/UE**
- **Machinery Directive 2006/42/CE**

N880X N925X N1060X...xR mille SERIES

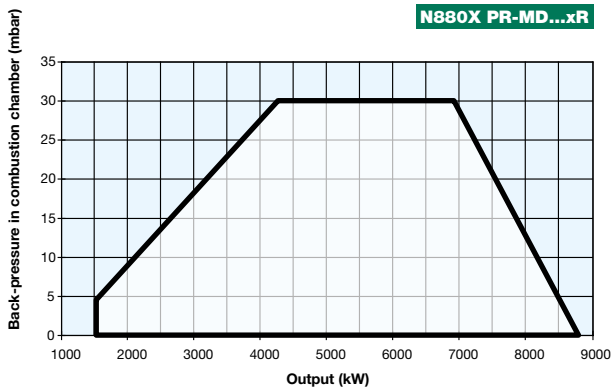

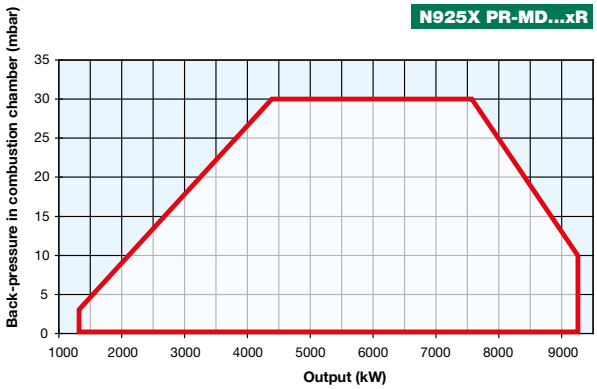

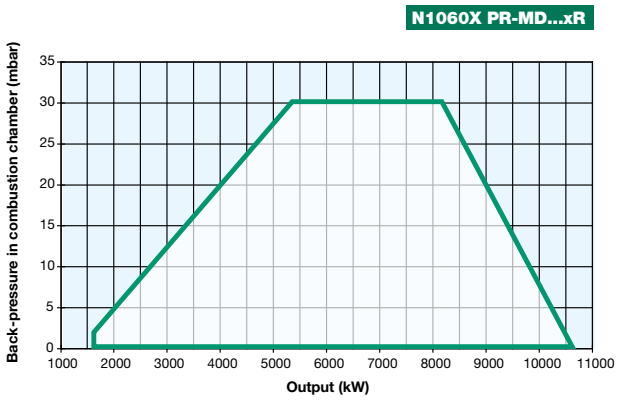

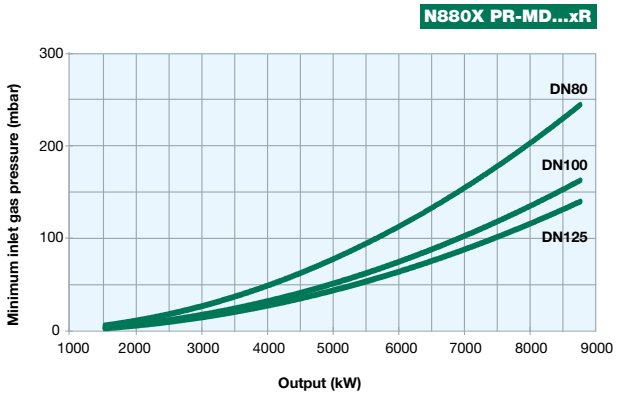

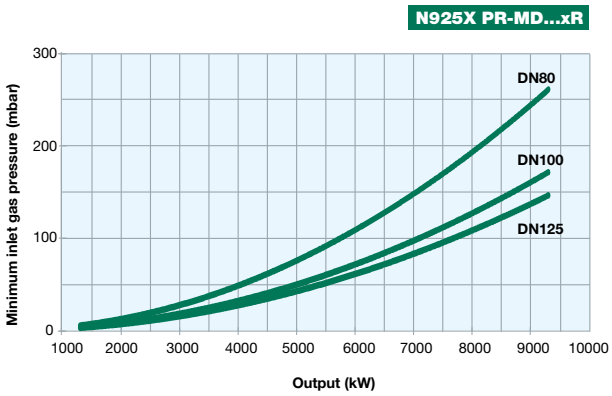

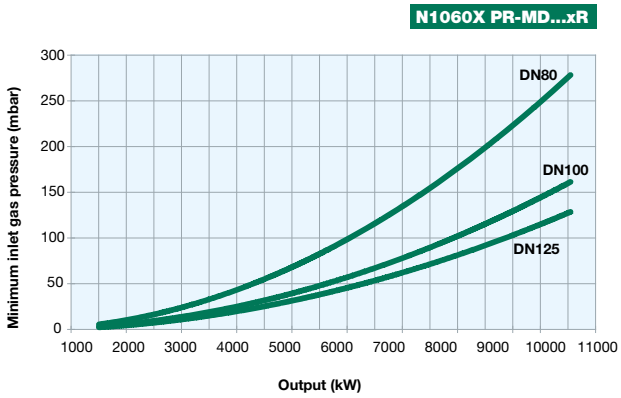

Attention: the graph shows the value of the gas output (kW) against the corresponding pressure without the combustion chamber back pressure. To know the minimum gas pressure at gas train, in order to get the gas output, it is necessary to add the boiler back pressure to the value read on the curve.

duemila SERIES HRX2050R HRX2050 HRX2060 HRX2080

GAS/LIGHT OIL

The DUEMILA series **Low NO_x** burners **Class 3 (< 80 mg/kWh)**, made in aluminum housing with a backward curved centrifugal impeller is studied and developed to get high performance and efficiency combined with low emissions.
In this manner these series can burn the two flues separately. This is possible because these burners are equipped with an independent electric motor for the activation of the oil pump. As a consequence during gas firing, the oil pump motor does not operate and remains off.
These burners are equipped with a high performance combustion head, designed to achieve an high irradiating flame when they run on natural gas. Instead, when they run on light oil, they are equipped with a by-pass nozzle which, using a pressure regulator, can reach a modulating ratio of 1:3.
Therefore, the burners are provided with an UV photocell to control the flame during the operation.

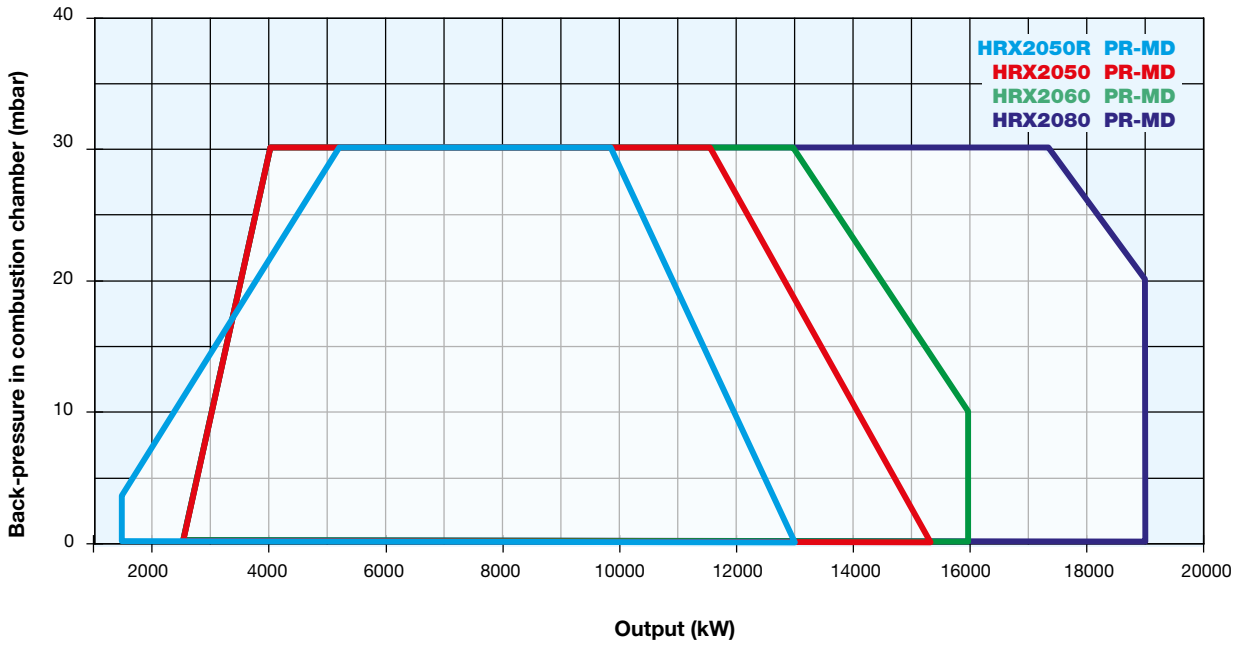

GAS/LIGHT OIL

CIB UNIGAS < 80 mg/kWh CLASS 3 Low NOx

HRX2050R HRX2050 HRX2060 HRX2080

duemila SERIES

TECHNICAL DETAILS

Type	Model	Power kW		Auxiliary electrical power supply	Motor electrical power supply	Fan motor	Pump motor	Gas connections	Noise level
		min.	max.			kW	kW		dBA
HRX2050R	MG.xx.x.xx.A.1.xxx.xx	1.780	13.000	230 V 1N AC 50 Hz	400 V 3 AC 50 Hz	37,0	5,5	DN80 - DN100 - DN125	92,5
HRX2050	MG.xx.x.xx.A.1.xxx.xx	2.500	15.200	230 V 1N AC 50 Hz	400 V 3 AC 50 Hz	37,0	5,5	DN80 - DN100 - DN125	92,5
HRX2060	MG.xx.S.xx.A.1.xxx.xx	2.500	16.000	230 V 1N AC 50 Hz	400 V 3 AC 50 Hz	45,0	5,5	DN100 - DN125	91,7
HRX2080	MG.xx.x.xx.A.1.xxx.xx	2.500	19.000	230 V 1N AC 50 Hz	400 V 3 AC 50 Hz	55,0	5,5	DN100 - DN125	91,7

For the configuration of the gas train, see pages 116-117.

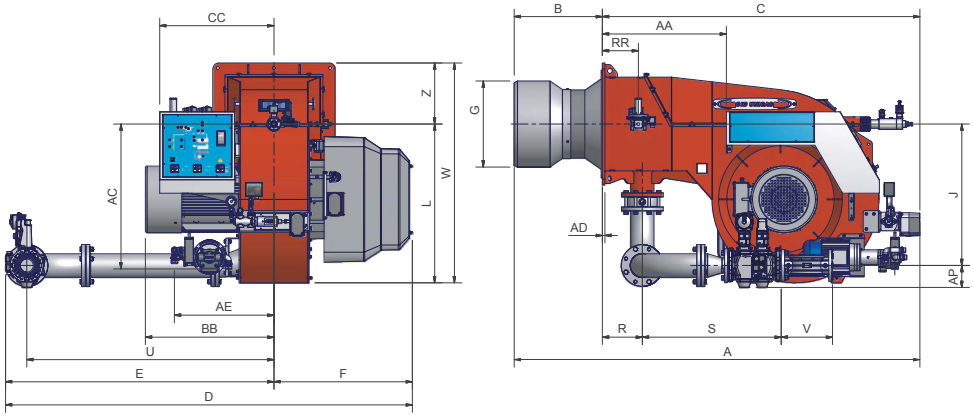

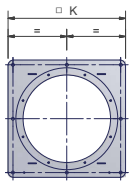

Burner flange

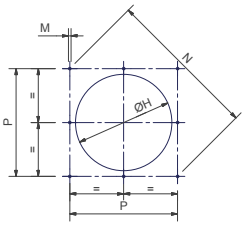

Suggested boiler drilling

Type	Packaging dimensions (mm)			
	l	p	h	kg
HRX2050R	2.396	1.886	1.969	1.330
HRX2050	2.396	1.886	1.969	1.330
HRX2060	2.396	1.886	1.969	1.410
HRX2080	2.396	1.886	1.969	1.510

Approximate values

Type	Model	Overall dimensions (mm)																												
		AS	AL	AA	AC	AD	AE	AP	BS*	BL*	BB	C	CC	D	E	F	G*	H*	J	K	L	M	N	P	R	RR	S	U	V	W	Z
HRX2050R	MG.xx.x.xx.A.1.100.xx	2160	2260	741	866	15	595	145	500	600	768	1898	735	2447	1620	827	514	564	845	730	949	M16	948	670	239	215	874	1477	350	1314	365
HRX2050R	MG.xx.x.xx.A.1.125.xx	2160	2260	741	866	15	595	175	500	600	768	1898	735	2465	1638	827	514	564	845	730	949	M16	948	670	239	215	755	1477	480	1314	365
HRX2050	MG.xx.x.xx.A.1.100.xx	2160	2260	741	866	15	595	145	500	600	768	1898	735	2447	1620	827	514	564	845	730	949	M16	948	670	239	215	874	1477	350	1314	365
HRX2050	MG.xx.x.xx.A.1.125.xx	2160	2260	741	866	15	595	175	500	600	768	1898	735	2465	1638	827	514	564	845	730	949	M16	948	670	239	215	755	1477	480	1314	365
HRX2060	MG.xx.S.xx.A.1.100.xx	2160	-	741	866	15	645	145	500	-	807	1890	735	2325	1479	846	550	600	775	850	949	M16	1117	790	239	215	874	1336	350	1374	425
HRX2060	MG.xx.S.xx.A.1.125.xx	2160	-	741	866	15	645	175	500	-	807	1890	735	2343	1497	846	550	600	775	850	949	M16	1117	790	239	215	755	1336	480	1374	425
HRX2080	MG.xx.S.xx.A.1.100.xx	2180	-	741	866	15	645	145	520	-	885	1890	735	2325	1479	846	700	750	775	850	949	M16	1117	790	239	215	874	1336	350	1374	425
HRX2080	MG.xx.S.xx.A.1.125.xx	2180	-	741	866	15	645	175	520	-	885	1890	735	2343	1497	846	700	750	775	850	949	M16	1117	790	239	215	755	1336	480	1374	425

* The BS, BL, G, H dimensions must be confirmed from our technical DPT.
Approximate values

HRX2050R HRX2050 HRX2060 HRX2080

GAS/LIGHT OIL

Monoblock burners 2000 series are supplied complete with a steel supporting frame: burner installation and manutention are greatly simplified.
The frame is equipped with wheels to easily move the burner, and its height is adjustable to match any type of boiler or furnace.

SUPPORTING FRAME FOR BURNERS 2050 SERIES

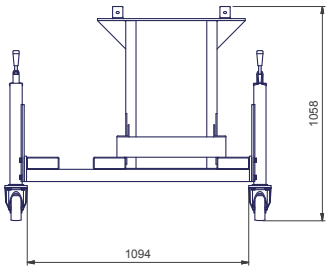

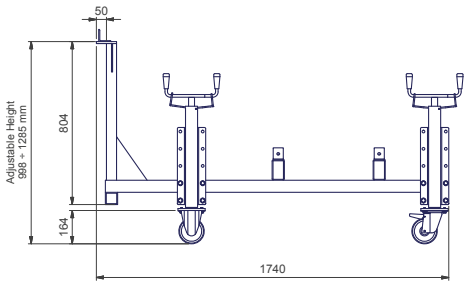

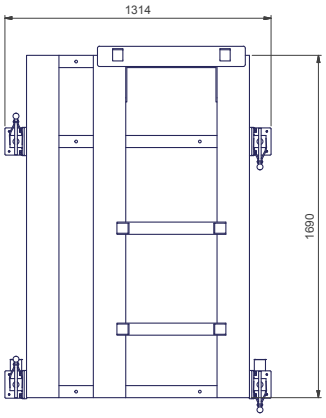

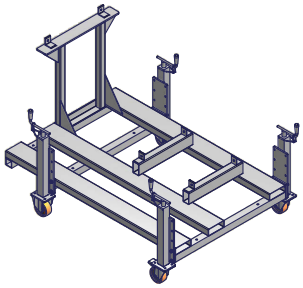

SUPPORTING FRAME FOR BURNERS 2060/2080 SERIES

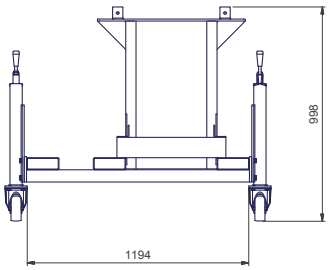

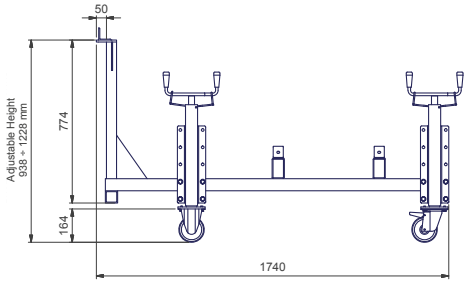

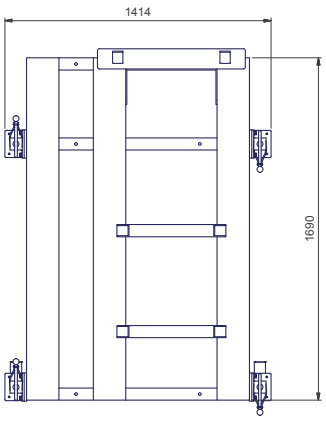

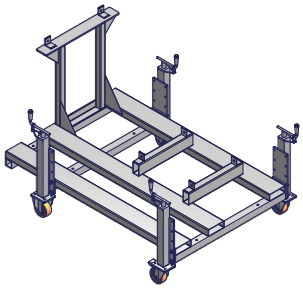

HRX2050R HRX2050 HRX2060 HRX2080

duemila SERIES

ELECTRONIC OPERATION

Model	Gas train	Operation	HRX2050R Code	HRX2050R Price €	HRX2050 Code	HRX2050 Price €
MG.PR.S.xx.A.1.80.EC	DN80	PR	03207195C		03207255C	
MG.PR.L.xx.A.1.80.EC	DN80	PR	03207205C		03207265C	
MG.PR.S.xx.A.1.100.EC	DN100	PR	03207215C		03207275C	
MG.PR.L.xx.A.1.100.EC	DN100	PR	03207225C		03207285C	
MG.PR.S.xx.A.1.125.EC	DN125	PR	03207235C		03207295C	
MG.PR.L.xx.A.1.125.EC	DN125	PR	03207245C		03207305C	
MG.MD.S.xx.A.1.80.EC	DN80	MD(*)	03207195G		03207255G	
MG.MD.L.xx.A.1.80.EC	DN80	MD(*)	03207205G		03207265G	
MG.MD.S.xx.A.1.100.EC	DN100	MD(*)	03207215G		03207275G	
MG.MD.L.xx.A.1.100.EC	DN100	MD(*)	03207225G		03207285G	
MG.MD.S.xx.A.1.125.EC	DN125	MD(*)	03207235G		03207295G	
MG.MD.L.RU.A.1.125.EC	DN125	MD(*)	03207245G		03207305G	
MG.MD.S.xx.A.1.80.ES	DN80	MD(*)	03207195S		03207255S	
MG.MD.L.xx.A.1.80.ES	DN80	MD(*)	03207205S		03207265S	
MG.MD.S.xx.A.1.100.ES	DN100	MD(*)	03207215S		03207275S	
MG.MD.L.xx.A.1.100.ES	DN100	MD(*)	03207225S		03207285S	
MG.MD.S.xx.A.1.125.ES	DN125	MD(*)	03207235S		03207295S	
MG.MD.L.xx.A.1.125.ES	DN125	MD(*)	03207245S		03207305S	

Model	Gas train	Operation	HRX2060 Code	HRX2060 Price €	HRX2080 Code	HRX2080 Price €
MG.MD.S.xx.A.1.80.ES	DN80	MD(*)	03207135S		03207165S	
MG.MD.S.xx.A.1.100.ES	DN100	MD(*)	03207145S		03207175S	
MG.MD.S.xx.A.1.125.ES	DN125	MD(*)	03207155S		03207185S	

(*) In order for the supply to be completed, the burner must be equipped with the respective modulating probe (see accessory table, page 290).

In compliance with:
- **GAR Directive 2016/426/EU**
- **Low Tension Directive 2014/35/UE**
- **Electromagnetic Compatibility Directive 2014/30/UE**
- **Machinery Directive 2006/42/CE**

HRX2050R HRX2050 HRX2060 HRX2080

GAS/LIGHT OIL

HRX2050R PR-MD

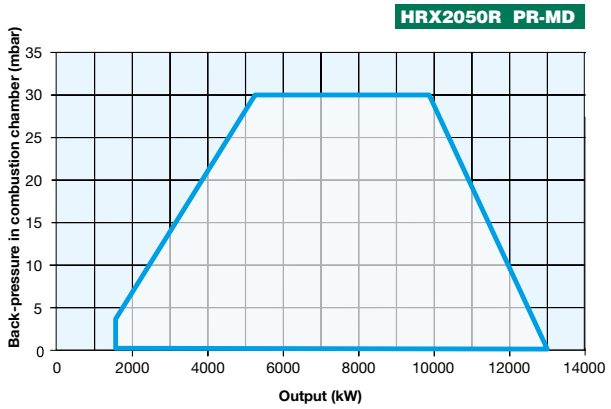

HRX2050 PR-MD

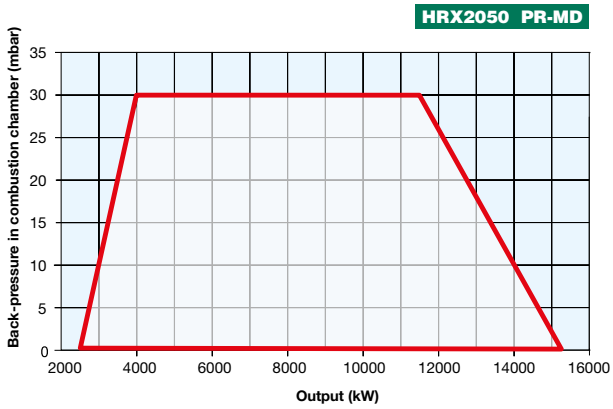

HRX2060 PR-MD

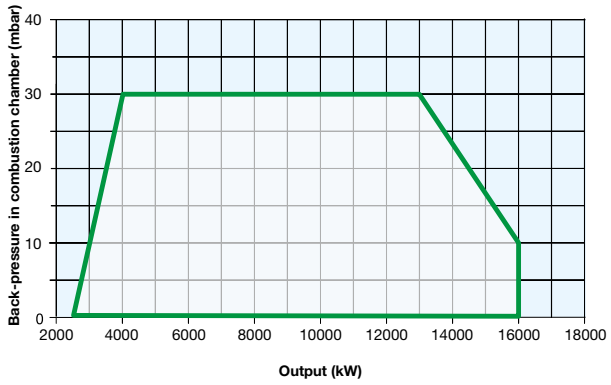

HRX2080 PR-MD

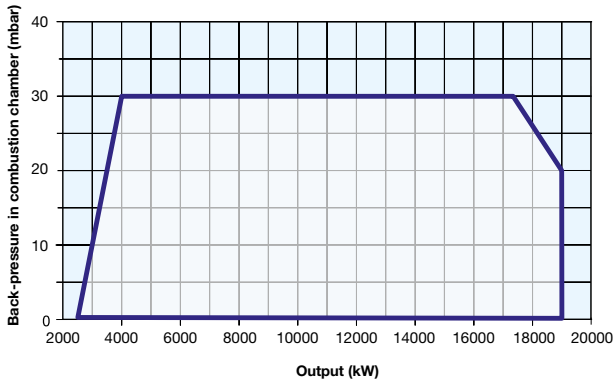

HRX2050R PR-MD

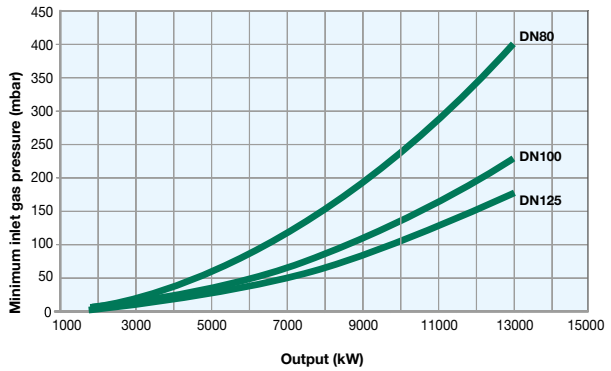

HRX2050 PR-MD

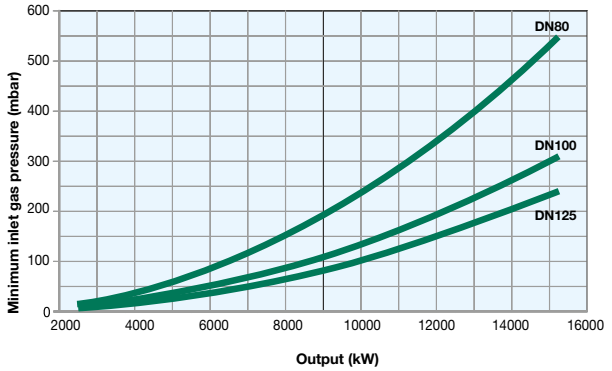

HRX2060 PR-MD

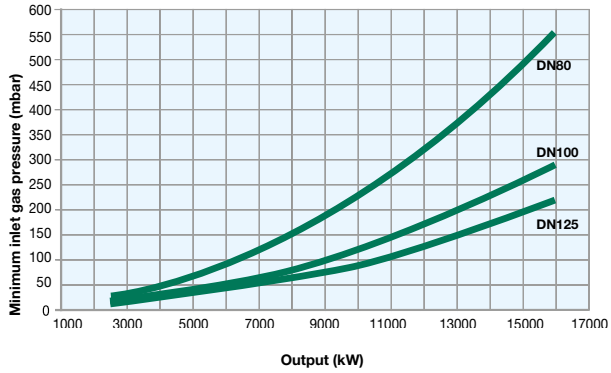

HRX2080 PR-MD

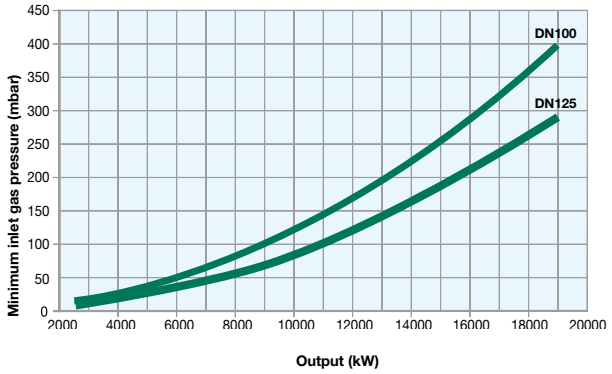

Attention: the graph shows the value of the gas output (kW) against the corresponding pressure without the combustion chamber back pressure. To know the minimum gas pressure at gas train, in order to get the gas output, it is necessary to add the boiler back pressure to the value read on the curve.

DUAL FUEL BURNERS GAS/HEAVY OIL

mechanical atomization
novanta series

KP91 - PR/MD
KP92 - PR/MD
KP93 - PR/M

mechanical atomization
cinquecento series

KR512 - PR/MD
KR515 - PR/MD
KR520 - PR/MD
KR525 - PR/MD

mechanical atomization
mille series

KR1025 - PR/MD
KR1030 - PR/MD
KR1040 - PR/MD

mechanical atomization
duemila series

KR2050 - PR/MD
KR2060 - PR/MD
KR2080 - PR/MD

Type pneumatic atomization

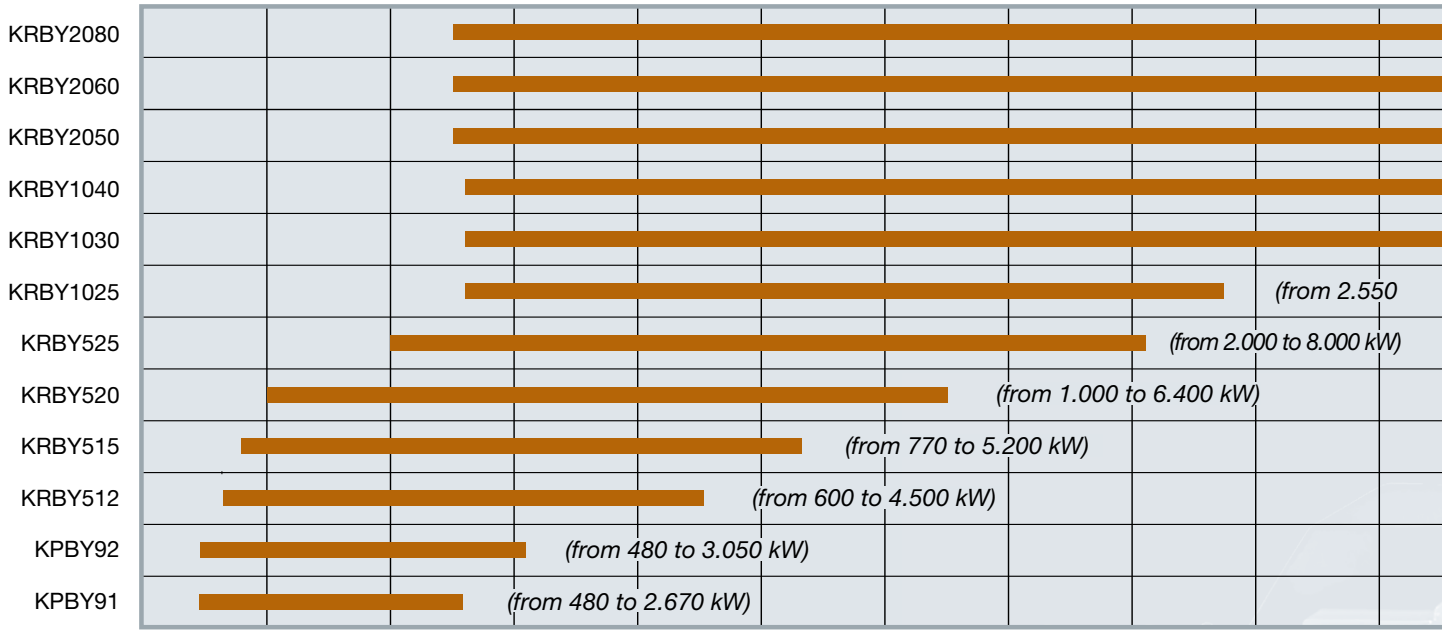

Type mechanical atomization

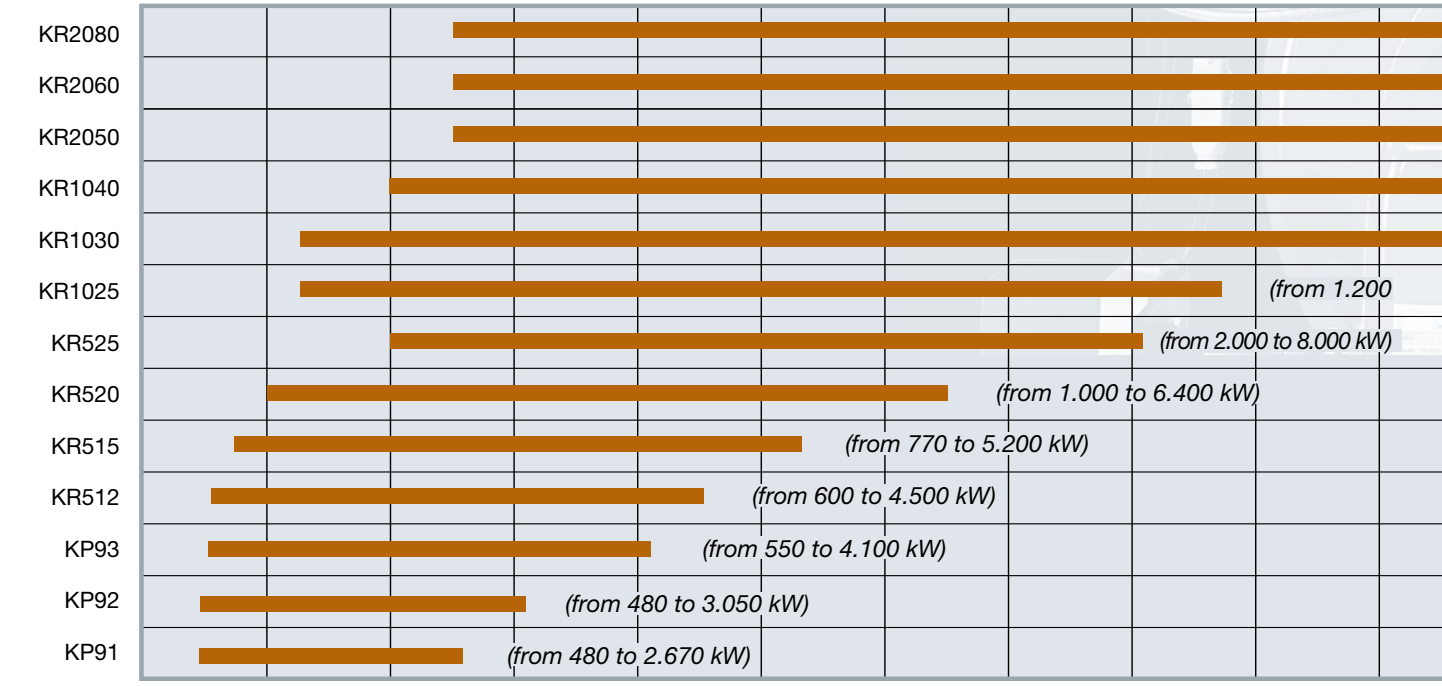

pneumatic atomization
novanta series

KPBY91 - PR/MD
KPBY92 - PR/MD

pneumatic atomization
cinquecento series

KRBY512 - PR/MD
KRBY515 - PR/MD
KRBY520 - PR/MD
KRBY525 - PR/MD

pneumatic atomization
mille series

KRBY1025 - PR/MD
KRBY1030 - PR/MD
KRBY1040 - PR/MD

pneumatic atomization
duemila series

KRBY2050 - PR/MD
KRBY2060 - PR/MD
KRBY2080 - PR/MD

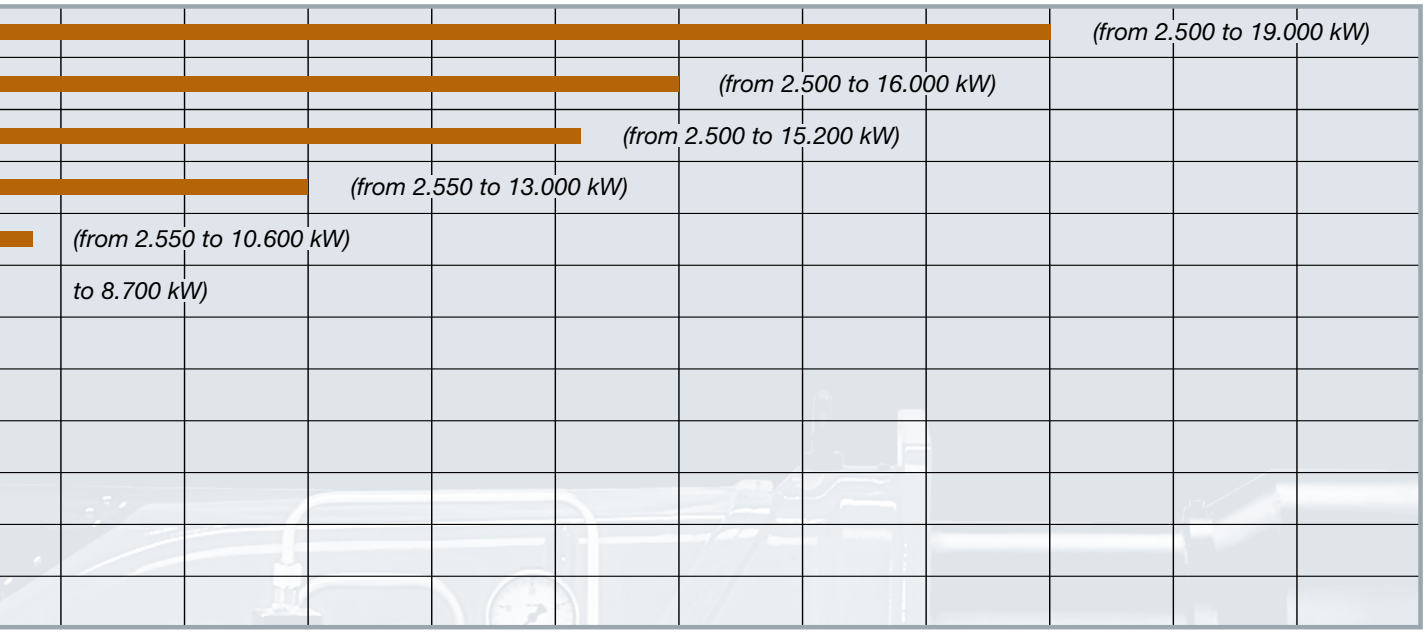

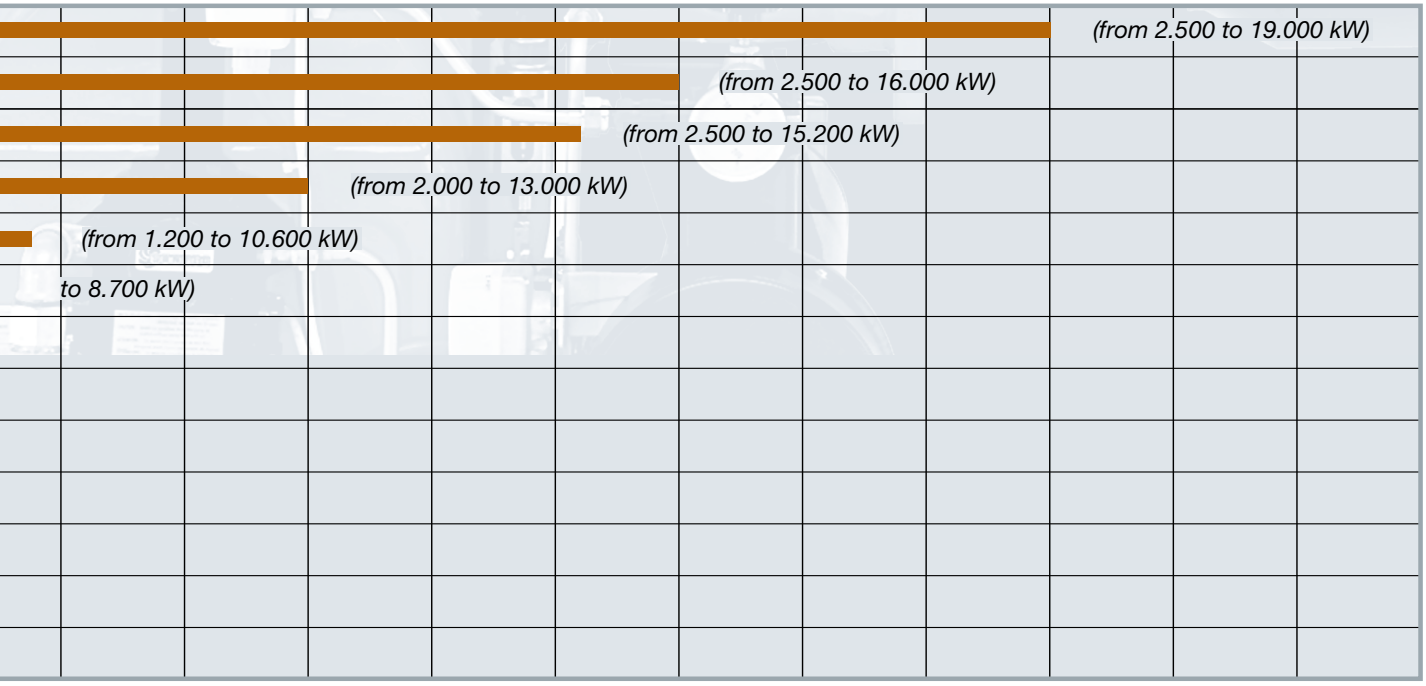

novanta SERIES KP91 KP92 KP93

MECHANICAL ATOMIZATION

GAS/HEAVY OIL

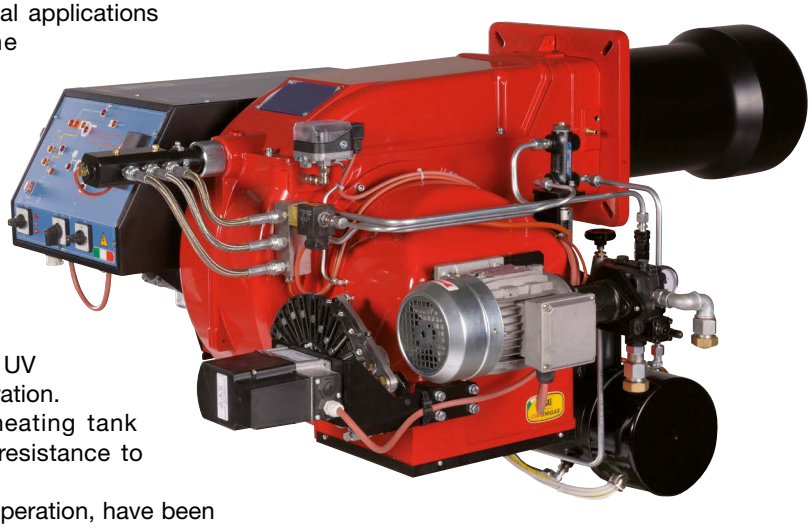

The dual flue series KP, suitable for industrial applications up to 4.100 kW, perfectly combine the mechanical devices and systems typical of gas burners with the ones of heavy oil burners. In this manner these burners can burn the two flues separately. This is possible because these burners are equipped with an independent electric motor for the activation of the oil pump. As a consequence during gas firing, the oil pump motor does not operate and remains off.
The burners are, therefore, provided with an UV photocell to control the flame during the operation.
These burners are provided with a pre-heating tank equipped with low thermal load electrical resistance to ensure oil fluidity.
All burners, with progressive or modulating operation, have been built to burn fuels whose standard viscosity is 50 cSt at 50°C (7 E°at 50°C).
Upon request it is available the version for heavy oils up to 400 cSt at 50°C (50 E°at 50°C) completed with the heating cable for the oil lance.

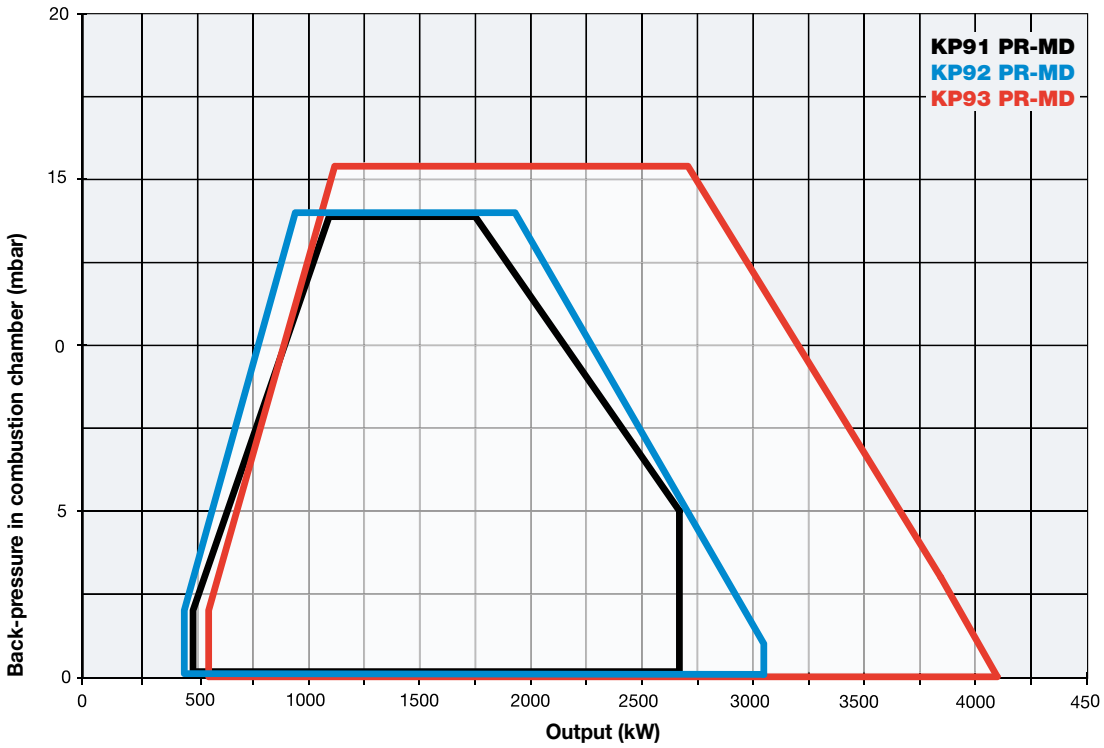

TECHNICAL DETAILS

Type	Model	Power kW		Auxiliary electrical power supply	Motor electrical power supply	Fan motor	Pump motor	Resistor	Gas connections
		min.	max.			kW	kW	kW	Rp
KP91	MN.xx.S.xx.A.1.xxx	480	2.670	230 V 1N AC 50 Hz	400 V 3 AC 50 Hz	4,0	1,1	18	2” - DN65 - DN80 - DN100
KP92	MN.xx.S.xx.A.1.xxx	480	3.050	230 V 1N AC 50 Hz	400 V 3 AC 50 Hz	5,5	1,1	18	2” - DN65 - DN80 - DN100
KP93	MN.xx.S.xx.A.1.xxx	550	4.100	230 V 1N AC 50 Hz	400 V 3 AC 50 Hz	7,5	1,1	25	2” - DN65 - DN80 - DN100

For the configuration of the gas train, see pages 116-117.

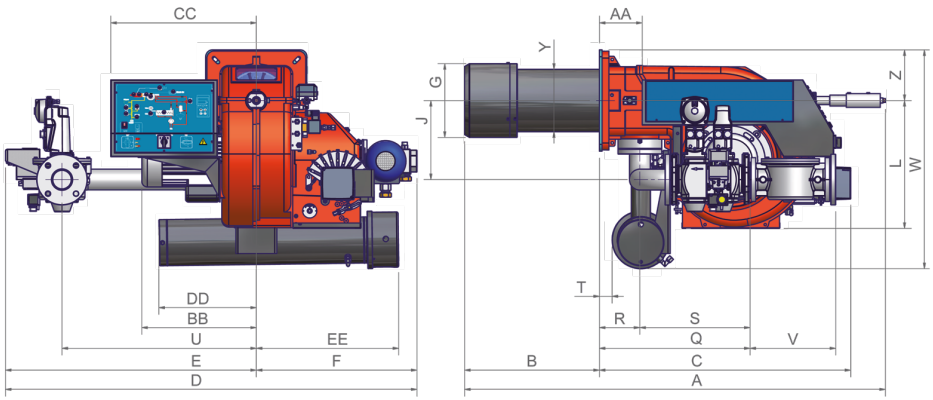

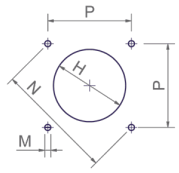

Suggested boiler drilling

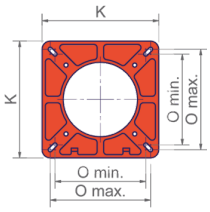

Burner flange

Type	Packaging dimensions (mm)			
	l	p	h	kg
KP91	1730	1280	1020	370
KP92	1730	1280	1020	370
KP93	1730	1280	1020	370

Approximate values

Type	Model	Overall dimensions (mm)																																			
		A	AA	AC	AD	AE	AN	AP	B	BB	C	CC	D	DD	E	EE	F	G	H	I	J	K	L	M	N	O min	O max	P	Q	R	S	T	U	V	W	Y	Z
KP91	MN.xx.S.xx.A.1.50	1550	152	343	35	473	429	100	520	441	1030	533	1345	464	726	441	619	304	344	228	329	360	466	M12	424	280	310	300	522	148	374	44	624	216	783	240	185
KP91	MN.xx.S.xx.A.1.65	1550	152	343	35	473	405	117	520	441	1030	533	1494	464	875	441	619	304	344	228	288	360	466	M12	424	280	310	300	632	148	484	44	750	292	783	240	185
KP91	MN.xx.S.xx.A.1.80	1550	152	343	35	473	439	132	520	441	1030	533	1496	464	877	441	619	304	344	228	307	360	466	M12	424	280	310	300	683	148	535	44	750	313	783	240	185
KP91	MN.xx.S.xx.A.1.100	1550	152	343	35	473	592	145	520	441	1030	533	1586	464	967	441	619	304	344	228	447	360	466	M12	424	280	310	300	790	148	642	44	824	353	783	240	185
KP92	MN.xx.S.xx.A.1.50	1550	152	343	35	473	429	100	520	441	1030	533	1345	464	726	441	619	304	344	228	329	360	466	M12	424	280	310	300	522	148	374	44	624	216	783	240	185
KP92	MN.xx.S.xx.A.1.65	1550	152	343	35	473	405	117	520	441	1030	533	1494	464	875	441	619	304	344	228	288	360	466	M12	424	280	310	300	632	148	484	44	750	292	783	240	185
KP92	MN.xx.S.xx.A.1.80	1550	152	343	35	473	439	132	520	441	1030	533	1496	464	877	441	619	304	344	228	307	360	466	M12	424	280	310	300	683	148	535	44	750	313	783	240	185
KP92	MN.xx.S.xx.A.1.100	1550	152	343	35	473	592	145	520	441	1030	533	1586	464	967	441	619	304	344	228	447	360	466	M12	424	280	310	300	790	148	642	44	824	353	783	240	185
KP93	MN.xx.S.xx.A.1.50	1525	152	343	35	473	429	100	495	460	1030	533	1345	464	726	441	619	304	344	228	329	360	466	M12	424	280	310	300	522	148	374	44	624	216	783	248	185
KP93	MN.xx.S.xx.A.1.65	1525	152	343	35	473	405	117	495	460	1030	533	1494	464	875	441	619	304	344	228	288	360	466	M12	424	280	310	300	632	148	484	44	750	292	783	248	185
KP93	MN.xx.S.xx.A.1.80	1525	152	343	35	473	439	132	495	460	1030	533	1496	464	877	441	619	304	344	228	307	360	466	M12	424	280	310	300	683	148	535	44	750	313	783	248	185
KP93	MN.xx.S.xx.A.1.100	1525	152	343	35	473	592	145	495	460	1030	533	1586	464	967	441	619	304	344	228	447	360	466	M12	424	280	310	300	790	148	642	44	824	353	783	248	185

Approximate values
NOTE: dimensions with Siemens VGD valves

MECHANICAL OPERATION

Model	Gas train	Operation	KP91 Code	KP91 Price €	KP92 Code	KP92 Price €	KP93 Code	KP93 Price €
HEAVY OIL 50 cSt at 50°C (7°E at 50°C)								
MN.PR.S.xx.A.1.50	2”	PR	012081753		012082153		012081353	
MN.PR.S.xx.A.1.65	DN65	PR	012081853		012082253		012081453	
MN.PR.S.xx.A.1.80	DN80	PR	012081953		012082353		012081553	
MN.PR.S.xx.A.1.100	DN100	PR	012082053		012082453		012081653	
MN.MD.S.xx.A.1.50	2”	MD(*)	012081754		012082154		012081354	
MN.MD.S.xx.A.1.65	DN65	MD(*)	012081854		012082254		012081454	
MN.MD.S.xx.A.1.80	DN80	MD(*)	012081954		012082354		012081554	
MN.MD.S.xx.A.1.100	DN100	MD(*)	012082054		012082454		012081654	
HEAVY OIL 400 cSt at 50°C (50°E at 50°C)								
MD.PR.S.xx.A.1.50	2”	PR	012191753		012192153		012191353	
MD.PR.S.xx.A.1.65	DN65	PR	012191853		012192253		012191453	
MD.PR.S.xx.A.1.80	DN80	PR	012191953		012192353		012191553	
MD.PR.S.xx.A.1.100	DN100	PR	012192053		012192453		012191653	
MD.MD.S.xx.A.1.50	2”	PR	012191754		012192154		012191354	
MD.MD.S.xx.A.1.65	DN65	PR	012191854		012192254		012191454	
MD.MD.S.xx.A.1.80	DN80	PR	012191954		012192354		012191554	
MD.MD.S.xx.A.1.100	DN100	PR	012192054		012192454		012191654	

(*) In order for the supply to be completed, the burner must be equipped with the respective modulating probe (see accessory table, page 290).
In compliance with:
- GAR Directive 2016/426/EU
- Low Tension Directive 2014/35/UE
- Electromagnetic Compatibility Directive 2014/30/UE
- Machinery Directive 2006/42/CE

ELECTRONIC OPERATION

Model	Gas train	Operation	KP91 Code	KP91 Price €	KP92 Code	KP92 Price €	KP93 Code	KP93 Price €
HEAVY OIL 50 cSt at 50°C (7°E at 50°C)								
MN.PR.S.xx.A.1.50.EC	2”	PR	01208175C		01208215C		01208135C	
MN.PR.S.xx.A.1.65.EC	DN65	PR	01208185C		01208225C		01208145C	
MN.PR.S.xx.A.1.80.EC	DN80	PR	01208195C		01208235C		01208155C	
MN.PR.S.xx.A.1.100.EC	DN100	PR	01208205C		01208245C		01208165C	
MN.MD.S.xx.A.1.50.EC	2”	MD(*)	01208175G		01208215G		01208135G	
MN.MD.S.xx.A.1.65.EC	DN65	MD(*)	01208185G		01208225G		01208145G	
MN.MD.S.xx.A.1.80.EC	DN80	MD(*)	01208195G		01208235G		01208155G	
MN.MD.S.xx.A.1.100.EC	DN100	MD(*)	01208205G		01208245G		01208165G	
HEAVY OIL 400 cSt at 50°C (50°E at 50°C)								
MD.PR.S.xx.A.1.50.EC	2”	PR	01219175C		01219215C		01219135C	
MD.PR.S.xx.A.1.65.EC	DN65	PR	01219185C		01219225C		01219145C	
MD.PR.S.xx.A.1.80.EC	DN80	PR	01219195C		01219235C		01219155C	
MD.PR.S.xx.A.1.100.EC	DN100	PR	01219205C		01219245C		01219165C	
MD.MD.S.xx.A.1.50.EC	2”	PR	01219175G		01219215G		01219135G	
MD.MD.S.xx.A.1.65.EC	DN65	PR	01219185G		01219225G		01219145G	
MD.MD.S.xx.A.1.80.EC	DN80	PR	01219195G		01219235G		01219155G	
MD.MD.S.xx.A.1.100.EC	DN100	PR	01219205G		01219245G		01219165G	

ELECTRONIC OPERATION

Model	Gas train	Operation	KP91 Code	KP91 Price €	KP92 Code	KP92 Price €	KP93 Code	KP93 Price €
HEAVY OIL 50 cSt at 50°C (7°E at 50°C)								
MN.MD.S.xx.A.1.50.ES	2”	MD(*)	01208175S		01208215S		01208135S	
MN.MD.S.xx.A.1.65.ES	DN65	MD(*)	01208185S		01208225S		01208145S	
MN.MD.S.xx.A.1.80.ES	DN80	MD(*)	01208195S		01208235S		01208155S	
MN.MD.S.xx.A.1.100.ES	DN100	MD(*)	01208205S		01208245S		01208165S	
HEAVY OIL 400 cSt at 50°C (50°E at 50°C)								
MD.MD.S.xx.A.1.50.ES	2”	MD(*)	01219175S		01219215S		01219135S	
MD.MD.S.xx.A.1.65.ES	DN65	MD(*)	01219185S		01219225S		01219145S	
MD.MD.S.xx.A.1.80.ES	DN80	MD(*)	01219195S		01219235S		01219155S	
MD.MD.S.xx.A.1.100.ES	DN100	MD(*)	01219205S		01219245S		01219165S2	

(*) In order for the supply to be completed, the burner must be equipped with the respective modulating probe (see accessory table, page 290).

In compliance with:

- GAR Directive 2016/426/EU

- Low Tension Directive 2014/35/UE

- Electromagnetic Compatibility Directive 2014/30/UE

- Machinery Directive 2006/42/CE

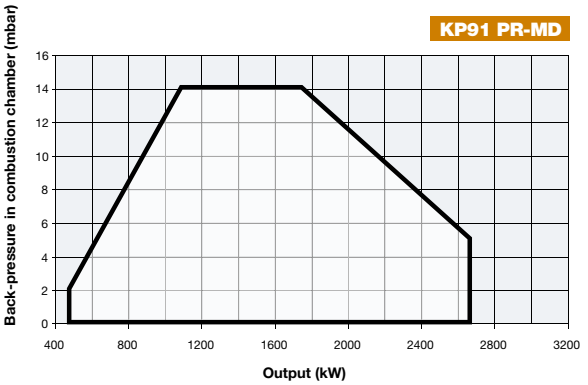

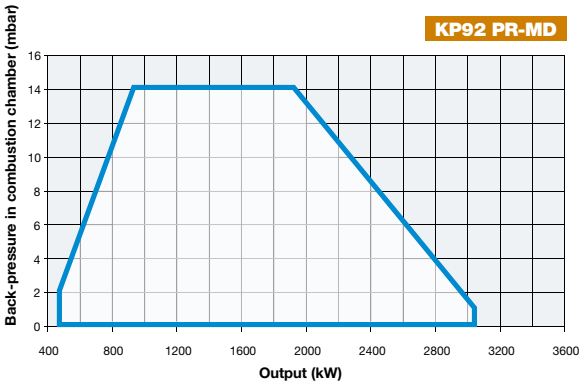

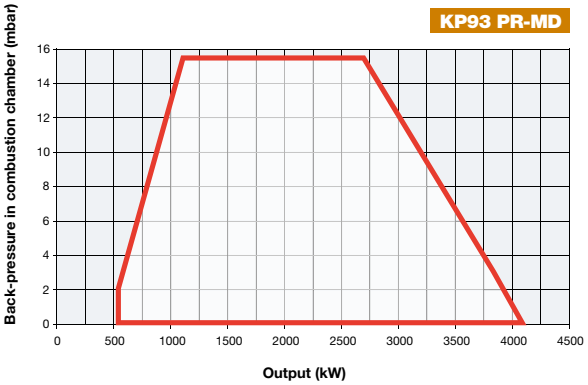

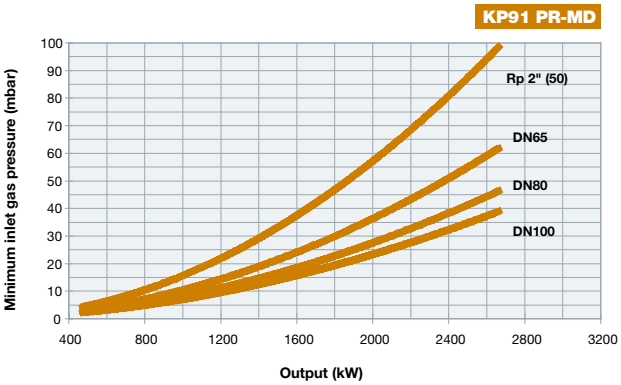

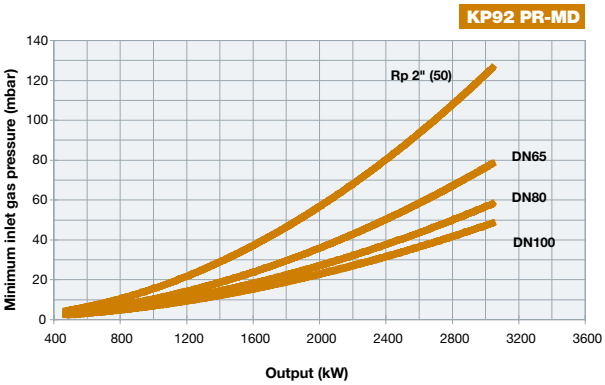

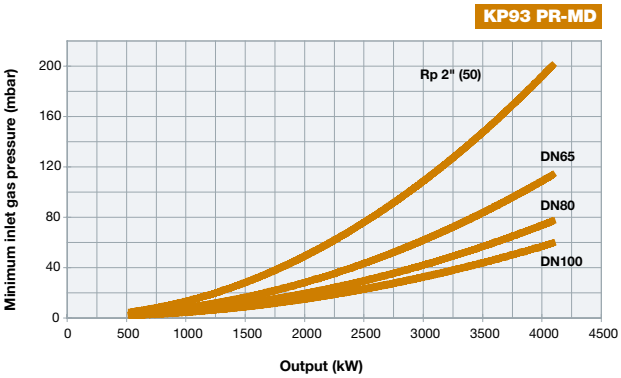

Attention: the graph shows the value of the gas output (kW) against the corresponding pressure without the combustion chamber back pressure. To know the minimum gas pressure at gas train, in order to get the gas output, it is necessary to add the boiler back pressure to the value read on the curve.

KR512 KR515 KR520 KR525 cinquecento SERIES

MECHANICAL ATOMIZATION

The dual flue series KP, suitable for industrial applications up to 8.000 kW, perfectly combine the mechanical devices and systems typical of gas burners with the ones of heavy oil burners.
In this manner these burners can burn the two flues separately. This is possible because these burners are equipped with an independent electric motor for the activation of the oil pump. As a consequence during gas firing, the oil pump motor does not operate and remains off.
The burners are, therefore, provided with an UV photocell to control the flame during the operation.
These burners are provided with a pre-heating tank equipped with low thermal load electrical resistance to ensure oil fluidity.
All burners, with progressive or modulating operation, have been built to burn fuels whose standard viscosity is 50 cSt at 50°C (7 E°at 50°C).
Upon request it is available the version for heavy oils up to 400 cSt at 50°C (50 E°at 50°C) completed with the heating cable for the oil lance.

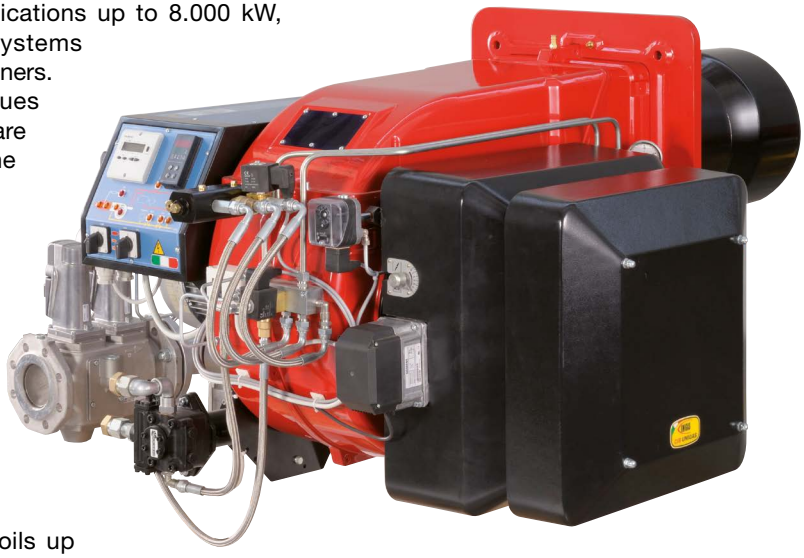

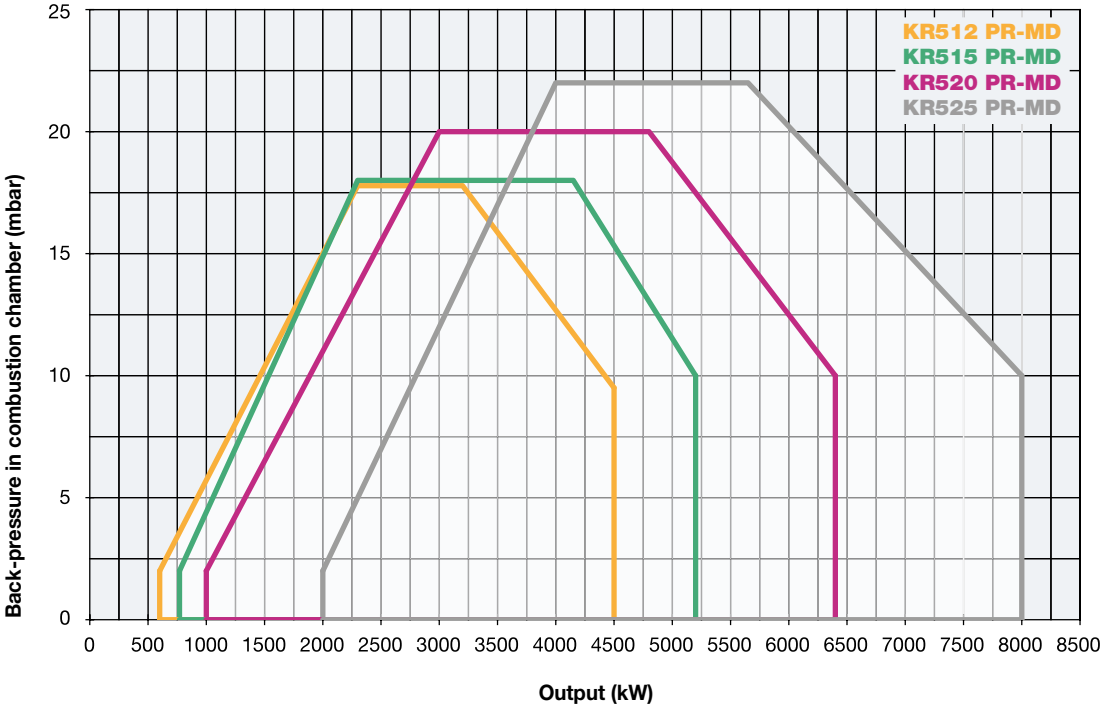

KR512 KR515 KR520 KR525

TECHNICAL DETAILS

Type	Model	Power kW		Auxiliary electrical power supply	Motor electrical power supply	Fan motor	Pump motor	Resistor	Gas connections	Noise level
		min.	max.			kW	kW	kW	Rp	dBA
KR512	MN.xx.S.xx.A.1.xxx	600	4.500	230 V 1N AC 50 Hz	400 V 3 AC 50 Hz	9,2	1,5	24	2" - DN65 - 80 - DN100	81,7
KR515	MN.xx.S.xx.A.1.xxx	770	5.200	230 V 1N AC 50 Hz	400 V 3 AC 50 Hz	11,0	1,5	12 + 18	2" - DN65 - 80 - DN100	82,3
KR520	MN.xx.S.xx.A.1.xxx	1.000	6.400	230 V 1N AC 50 Hz	400 V 3 AC 50 Hz	15,0	2,2	18 + 24	2" - DN65 - 80 - DN100	83,2
KR525	MN.xx.S.xx.A.1.xxx	2.000	8.000	230 V 1N AC 50 Hz	400 V 3 AC 50 Hz	18,5	2,2	24 + 24	DN65 - DN80 - DN100	84,9

For the configuration of the gas train, see pages 116-117.

KR512

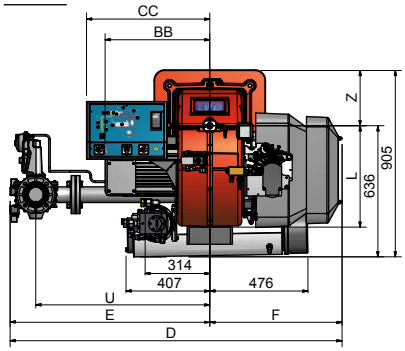

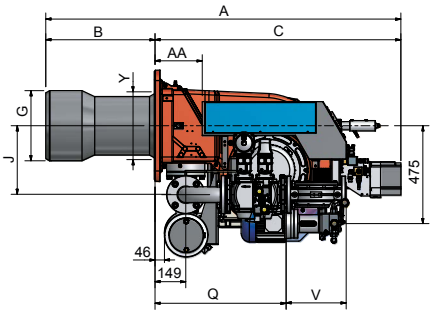

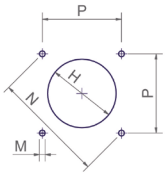

Suggested boiler drilling

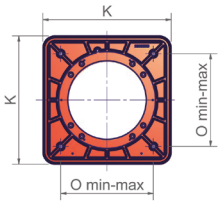

Burner flange

KR515 - KR520 - KR525

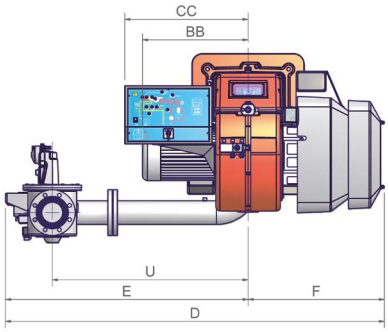

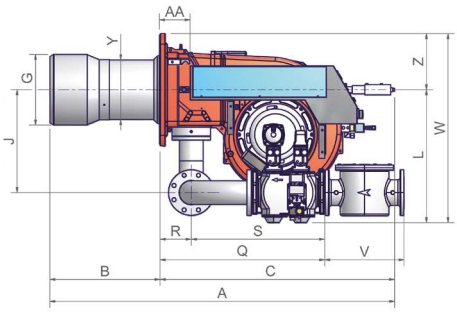

Type	Packaging dimensions (mm)			
	l	p	h	kg
KR512	1.760	1.470	1.300	470
KR515	1.760	1.470	1.300	470
KR520	1.760	1.470	1.300	470
KR525	1.800	1.500	1.300	480

Approximate values

In the KR515 KR520 KR525 model, oil pump set (pump, motor, oil tank and filter) is included, but supplied loose (not assembled on the burner).

Type	Model	Overall dimensions (mm)																								
		A	AA	B	BB	C	CC	D	E	F	G	H	J	K	L	M	N	O	P	Q	R	S	U	V	W	Y	Z
KR512	MN.xx.S.xx.A.1.50	1766	144	555	508	1211	598	1713	1071	642	380	420	494	540	492	M14	552	390	390	755	-	605	845	216	-	328	270
KR512	MN.xx.S.xx.A.1.65	1766	144	555	508	1211	598	1693	1051	642	380	420	494	540	492	M14	552	390	390	634	-	485	845	292	-	328	270
KR512	MN.xx.S.xx.A.1.80	1766	144	555	508	1211	598	1726	1084	642	380	420	494	540	492	M14	552	390	390	685	-	535	875	322	-	328	270
KR512	MN.xx.S.xx.A.1.100	1766	144	555	508	1211	598	1809	1167	642	380	420	494	540	492	M14	552	390	390	792	-	642	942	382	-	328	270
KR515	MN.xx.S.xx.A.1.50	1741	144	530	508	1211	598	1713	1071	642	380	420	494	540	492	M14	552	390	390	755	150	605	845	216	759	328	270
KR515	MN.xx.S.xx.A.1.65	1741	144	530	508	1211	598	1693	1051	642	380	420	494	540	492	M14	552	390	390	634	150	485	845	292	759	328	270
KR515	MN.xx.S.xx.A.1.80	1741	144	530	508	1211	598	1726	1084	642	380	420	494	540	492	M14	552	390	390	685	150	535	875	322	759	328	270
KR515	MN.xx.S.xx.A.1.100	1741	144	530	508	1211	598	1809	1167	642	380	420	494	540	492	M14	552	390	390	792	150	642	942	382	759	328	270
KR520	MN.xx.S.xx.A.1.50	1761	144	550	508	1211	598	1713	1071	642	434	484	494	540	492	M14	552	390	390	755	150	605	845	216	759	328	270
KR520	MN.xx.S.xx.A.1.65	1761	144	550	508	1211	598	1693	1051	642	434	484	494	540	492	M14	552	390	390	634	150	485	845	292	759	328	270
KR520	MN.xx.S.xx.A.1.80	1761	144	550	508	1211	598	1726	1084	642	434	484	494	540	492	M14	552	390	390	685	150	535	875	322	759	328	270
KR520	MN.xx.S.xx.A.1.100	1761	144	550	508	1211	598	1809	1167	642	434	484	494	540	492	M14	552	390	390	792	150	642	942	382	759	328	270
KR525	MN.xx.S.xx.A.1.50	1741	144	530	650	1211	598	1713	1071	642	454	504•	494	540	492	M14	552	390	390	755	150	605	845	216	759	343	270
KR525	MN.xx.S.xx.A.1.65	1741	144	530	650	1211	598	1693	1051	642	454	504•	494	540	492	M14	552	390	390	634	150	485	845	292	759	343	270
KR525	MN.xx.S.xx.A.1.80	1741	144	530	650	1211	598	1726	1084	642	454	504•	494	540	492	M14	552	390	390	685	150	535	875	322	759	343	270
KR525	MN.xx.S.xx.A.1.100	1741	144	530	650	1211	598	1809	1167	642	454	504•	494	540	492	M14	552	390	390	792	150	642	942	382	759	343	270

Approximate values

- Install a counter-flange between the burner and the boiler or in alternative, drill the H hole smaller but higher than the Y point and assemble the blast tube inside the boiler.

NOTE: dimensions with Siemens VGD valves.

KR512 KR515 KR520 KR525 cinquecento SERIES

MECHANICAL OPERATION

Model	Gas train	Operation	KR512 Code	KR512 Price €	KR515 Code	KR515 Price €
HEAVY OIL 50 cSt at 50°C (7°E at 50°C)						
MN.PR.S.xx.A.1.50	2”	PR	029080153		029080553	
MN.PR.S.xx.A.1.65	DN65	PR	029080253		029080653	
MN.PR.S.xx.A.1.80	DN80	PR	029080353		029080753	
MN.PR.S.xx.A.1.100	DN100	PR	029080453		029080853	
MN.MD.S.xx.A.1.50	2”	MD(*)	029080154		029080554	
MN.MD.S.xx.A.1.65	DN65	MD(*)	029080254		029080654	
MN.MD.S.xx.A.1.80	DN80	MD(*)	029080354		029080754	
MN.MD.S.xx.A.1.100	DN100	MD(*)	029080454		029080854	

Model	Gas train	Operation	KR520 Code	KR520 Price €	KR525 Code	KR525 Price €
HEAVY OIL 50 cSt at 50°C (7°E at 50°C)						
MN.PR.S.xx.A.1.50	2”	PR	029080953		-	-
MN.PR.S.xx.A.1.65	DN65	PR	029081053		029081453	
MN.PR.S.xx.A.1.80	DN80	PR	029081153		029081553	
MN.PR.S.xx.A.1.100	DN100	PR	029081253		029081653	
MN.MD.S.xx.A.1.50	2”	MD(*)	029080954		-	
MN.MD.S.xx.A.1.65	DN65	MD(*)	029081054		029081454	
MN.MD.S.xx.A.1.80	DN80	MD(*)	029081154		029081554	
MN.MD.S.xx.A.1.100	DN100	MD(*)	029081254		029081654	

(*) In order for the supply to be completed, the burner must be equipped with the respective modulating probe (see accessory table, page 290).

In compliance with:
- **GAR Directive 2016/426/EU**
- **Low Tension Directive 2014/35/UE**
- **Electromagnetic Compatibility Directive 2014/30/UE**
- **Machinery Directive 2006/42/CE**

KR512 KR515 KR520 KR525

MECHANICAL OPERATION

			KR512		KR515	
Model	Gas train	Operation	Code	Price €	Code	Price €
HEAVY OIL 400 cSt at 50°C (50°E at 50°C)						
MD.PR.S.xx.A.1.50	2”	PR	029190153		029190553	
MD.PR.S.xx.A.1.65	DN65	PR	029190253		029190653	
MD.PR.S.xx.A.1.80	DN80	PR	029190353		029190753	
MD.PR.S.xx.A.1.100	DN100	PR	029190453		029190853	
MD.MD.S.xx.A.1.50	2”	MD(*)	029190154		029190554	
MD.MD.S.xx.A.1.65	DN65	MD(*)	029190254		029190654	
MD.MD.S.xx.A.1.80	DN80	MD(*)	029190354		029190754	
MD.MD.S.xx.A.1.100	DN100	MD(*)	029190454		029190854	

			KR520		KR525	
Model	Gas train	Operation	Code	Price €	Code	Price €
HEAVY OIL 400 cSt at 50°C (50°E at 50°C)						
MD.PR.S.xx.A.1.50	2”	PR	029190953		-	
MD.PR.S.xx.A.1.65	DN65	PR	029191053		029191453	
MD.PR.S.xx.A.1.80	DN80	PR	029191153		029191553	
MD.PR.S.xx.A.1.100	DN100	PR	029191253		029191653	
MD.MD.S.xx.A.1.50	2”	MD(*)	029190954		-	
MD.MD.S.xx.A.1.65	DN65	MD(*)	029191054		029191454	
MD.MD.S.xx.A.1.80	DN80	MD(*)	029191154		029191554	
MD.MD.S.xx.A.1.100	DN100	MD(*)	029191254		029191654	

(*) In order for the supply to be completed, the burner must be equipped with the respective modulating probe (see accessory table, page 290).

In compliance with:
- GAR Directive 2016/426/EU
- Low Tension Directive 2014/35/UE
- Electromagnetic Compatibility Directive 2014/30/UE
- Machinery Directive 2006/42/CE

KR512 KR515 KR520 KR525 cinquecento SERIES

ELECTRONIC OPERATION

Model	Gas train	Operation	KR512 Code	KR512 Price €	KR515 Code	KR515 Price €
HEAVY OIL 50 cSt at 50°C (7°E at 50°C)						
MN.PR.S.xx.A.1.50.EC	2”	PR	02908015C		02908055C	
MN.PR.S.xx.A.1.65.EC	DN65	PR	02908025C		02908065C	
MN.PR.S.xx.A.1.80.EC	DN80	PR	02908035C		02908075C	
MN.PR.S.xx.A.1.100.EC	DN100	PR	02908045C		02908085C	
MN.MD.S.xx.A.1.50.EC	2”	MD(*)	02908015G		02908055G	
MN.MD.S.xx.A.1.65.EC	DN65	MD(*)	02908025G		02908065G	
MN.MD.S.xx.A.1.80.EC	DN80	MD(*)	02908035G		02908075G	
MN.MD.S.xx.A.1.100.EC	DN100	MD(*)	02908045G		02908085G	

Model	Gas train	Operation	KR520 Code	KR520 Price €	KR525 Code	KR525 Price €
HEAVY OIL 50 cSt at 50°C (7°E at 50°C)						
MN.PR.S.xx.A.1.50.EC	2”	PR	02908095C		-	
MN.PR.S.xx.A.1.65.EC	DN65	PR	02908105C		02908145C	
MN.PR.S.xx.A.1.80.EC	DN80	PR	02908115C		02908155C	
MN.PR.S.xx.A.1.100.EC	DN100	PR	02908125C		02908165C	
MN.MD.S.xx.A.1.50.EC	2”	MD(*)	02908095G		-	
MN.MD.S.xx.A.1.65.EC	DN65	MD(*)	02908105G		02908145G	
MN.MD.S.xx.A.1.80.EC	DN80	MD(*)	02908115G		02908155G	
MN.MD.S.xx.A.1.100.EC	DN100	MD(*)	02908125G		02908165G	

(*) In order for the supply to be completed, the burner must be equipped with the respective modulating probe (see accessory table, page 290).

In compliance with:
- **GAR Directive 2016/426/EU**
- **Low Tension Directive 2014/35/UE**
- **Electromagnetic Compatibility Directive 2014/30/UE**
- **Machinery Directive 2006/42/CE**

ELECTRONIC OPERATION

Model	Gas train	Operation	KR512 Code	KR512 Price €	KR515 Code	KR515 Price €
HEAVY OIL 400 cSt at 50°C (50°E at 50°C)						
MD.PR.S.xx.A.1.50.EC	2”	PR	02919015C		02919055C	
MD.PR.S.xx.A.1.65.EC	DN65	PR	02919025C		02919065C	
MD.PR.S.xx.A.1.80.EC	DN80	PR	02919035C		02919075C	
MD.PR.S.xx.A.1.100.EC	DN100	PR	02919045C		02919085C	
MD.MD.S.xx.A.1.50.EC	2”	MD(*)	02919015G		02919055G	
MD.MD.S.xx.A.1.65.EC	DN65	MD(*)	02919025G		02919065G	
MD.MD.S.xx.A.1.80.EC	DN80	MD(*)	02919035G		02919075G	
MD.MD.S.xx.A.1.100.EC	DN100	MD(*)	02919045G		02919085G	

Model	Gas train	Operation	KR520 Code	KR520 Price €	KR525 Code	KR525 Price €
HEAVY OIL 400 cSt at 50°C (50°E at 50°C)						
MD.PR.S.xx.A.1.50.EC	2”	PR	02919095C		-	-
MD.PR.S.xx.A.1.65.EC	DN65	PR	02919105C		02919145C	
MD.PR.S.xx.A.1.80.EC	DN80	PR	02919115C		02919155C	
MD.PR.S.xx.A.1.100.EC	DN100	PR	02919125C		02919165C	
MD.MD.S.xx.A.1.50.EC	2”	MD(*)	02919095G		-	
MD.MD.S.xx.A.1.65.EC	DN65	MD(*)	02919105G		02919145G	
MD.MD.S.xx.A.1.80.EC	DN80	MD(*)	02919115G		02919155G	
MD.MD.S.xx.A.1.100.EC	DN100	MD(*)	02919125G		02919165G	

Model	Gas train	Operation	KR512 Code	KR512 Price €	KR515 Code	KR515 Price €
HEAVY OIL 50 cSt at 50°C (7°E at 50°C)						
MN.MD.S.xx.A.1.50.ES	2”	MD(*)	02908015S28		02908055S28	
MN.MD.S.xx.A.1.65.ES	DN65	MD(*)	02908025S28		02908065S28	
MN.MD.S.xx.A.1.80.ES	DN80	MD(*)	02908035S28		02908075S28	
MN.MD.S.xx.A.1.100.ES	DN100	MD(*)	02908045S28		02908085S28	

Model	Gas train	Operation	KR520 Code	KR520 Price €	KR525 Code	KR525 Price €
HEAVY OIL 50 cSt at 50°C (7°E at 50°C)						
MN.MD.S.xx.A.1.50.ES	2”	MD(*)	02908095S		-	
MN.MD.S.xx.A.1.65.ES	DN65	MD(*)	02908105S		02908145S	
MN.MD.S.xx.A.1.80.ES	DN80	MD(*)	02908115S		02908155S	
MN.MD.S.xx.A.1.100.ES	DN100	MD(*)	02908125S		02908165S	

(*) In order for the supply to be completed, the burner must be equipped with the respective modulating probe (see accessory table, page 290).
In compliance with:
- GAR Directive 2016/426/EU
- Low Tension Directive 2014/35/UE
- Electromagnetic Compatibility Directive 2014/30/UE
- Machinery Directive 2006/42/CE

KR512 KR515 KR520 KR525 cinquecento SERIES

ELECTRONIC OPERATION

			KR512		KR515	
Model	Gas train	Operation	Code	Price €	Code	Price €
HEAVY OIL 400 cSt at 50°C (50°E at 50°C)						
MD.MD.S.xx.A.1.50.ES	2”	MD(*)	02919015S		02919055S	
MD.MD.S.xx.A.1.65.ES	DN65	MD(*)	02919025S		02919065S	
MD.MD.S.xx.A.1.80.ES	DN80	MD(*)	02919035S		02919075S	
MD.MD.S.xx.A.1.100.ES	DN100	MD(*)	02919045S		02919085S	

			KR520		KR525	
Model	Gas train	Operation	Code	Price €	Code	Price €
HEAVY OIL 400 cSt at 50°C (50°E at 50°C)						
MD.MD.S.xx.A.1.50.ES	2”	MD(*)	02919095S		-	
MD.MD.S.xx.A.1.65.ES	DN65	MD(*)	02919105S		02919145S	
MD.MD.S.xx.A.1.80.ES	DN80	MD(*)	02919115S		02919155S	
MD.MD.S.xx.A.1.100.ES	DN100	MD(*)	02919125S		02919165S	

(*) In order for the supply to be completed, the burner must be equipped with the respective modulating probe (see accessory table, page 290).
In compliance with:
- GAR Directive 2016/426/EU
- Low Tension Directive 2014/35/UE
- Electromagnetic Compatibility Directive 2014/30/UE
- Machinery Directive 2006/42/CE

KR512 KR515 KR520 KR525

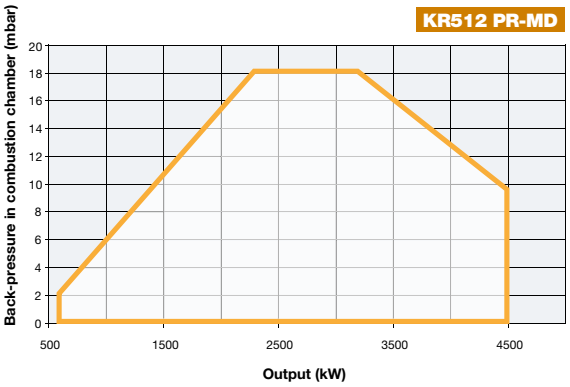

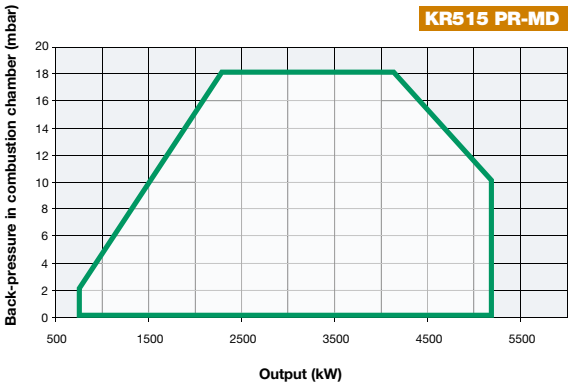

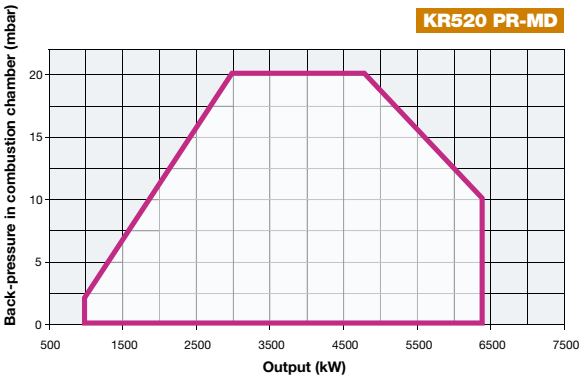

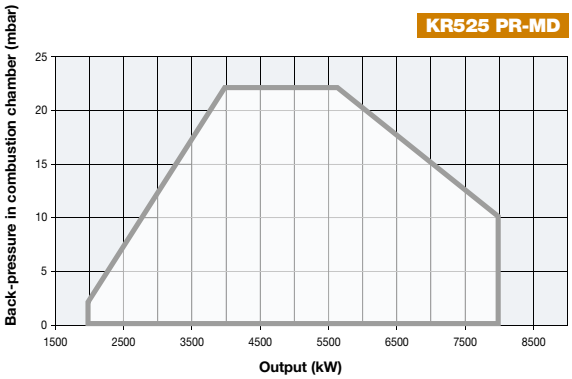

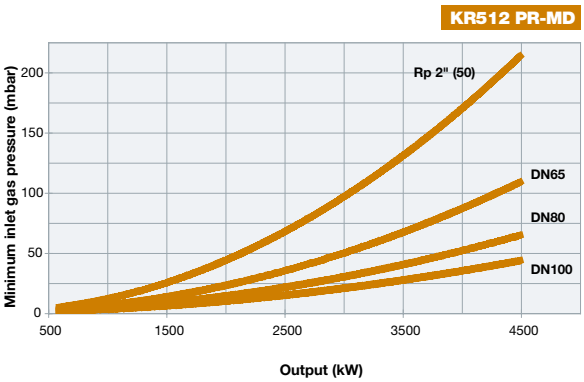

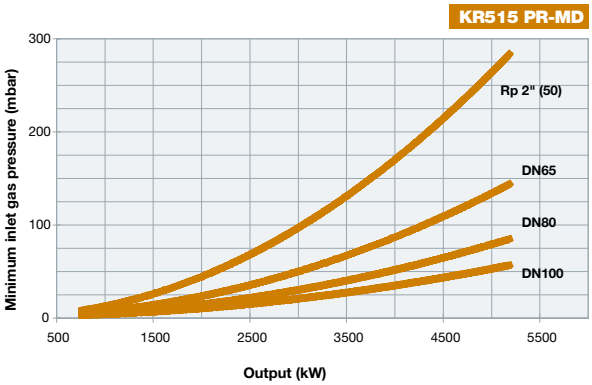

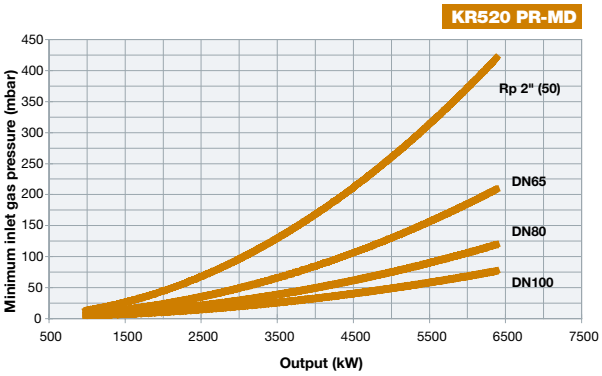

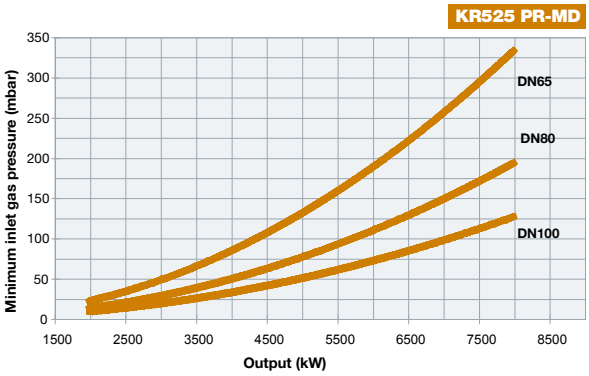

Attention: the graph shows the value of the gas output (kW) against the corresponding pressure without the combustion chamber back pressure. To know the minimum gas pressure at gas train, in order to get the gas output, it is necessary to add the boiler back pressure to the value read on the curve.

KR1025 KR1030 KR1040 mille SERIES

MECHANICAL ATOMIZATION

These models of burners represent the most powerful aluminium version of the KR series. Thanks to their independent electric motor for the activation of the oil pump, they can burn gas and heavy oil separately. In fact, during gas firing, the oil pump motor does not operate and remains off.
These burners are, therefore, provided with an UV photocell to control the flame during the operation.
They are, therefore, provided with a pre-heating tank equipped with low thermal load electrical resistance to ensure oil fluidity. All burners with progressive or modulating operation, have been built to burn fuels whose standard viscosity is 50 cSt at 50°C (7 E°at 50°C).
Upon request it is available the version for heavy oils up to 400 cSt at 50°C (50 E°at 50°C).

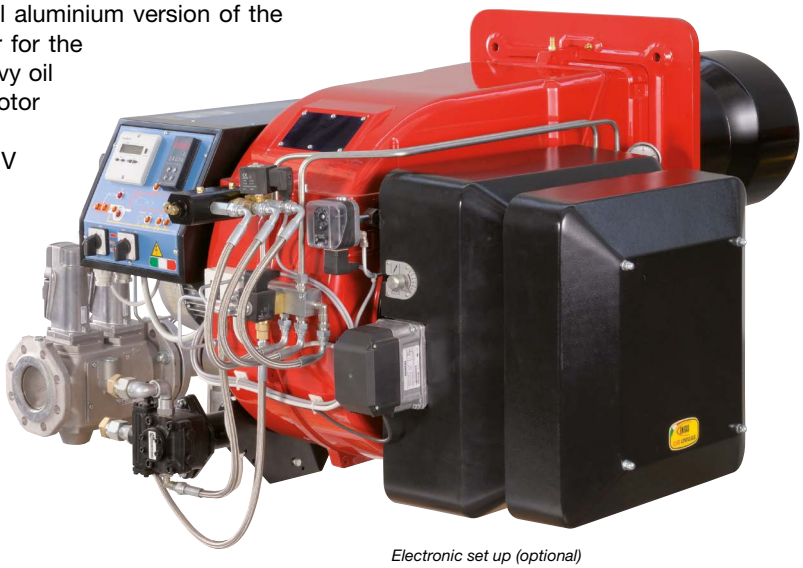

Electronic set up (optional)

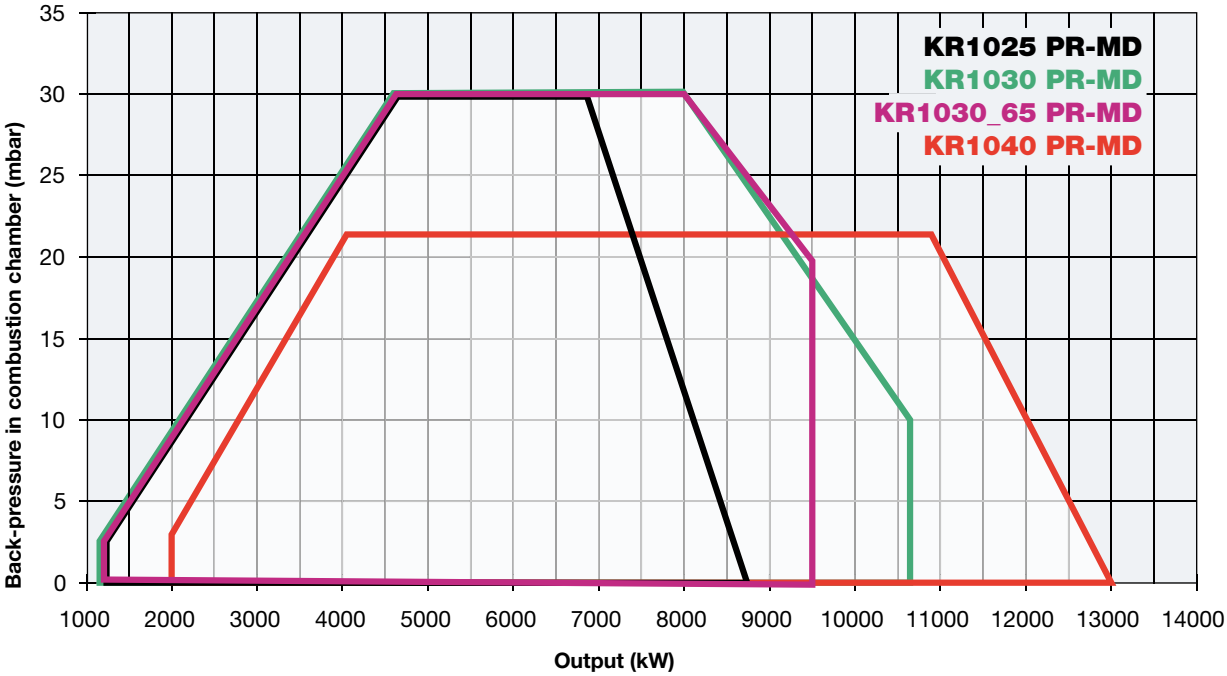

KR1025 KR1030 KR1040

TECHNICAL DETAILS

Type	Model	Power kW		Auxiliary electrical power supply	Motor electrical power supply	Fan motor	Pump motor	Resistor	Gas connections	Noise level
		min.	max.			kW	kW	kW		dBA
KR1025	MN.xx.S.xx.A.1.xxx	1.200	8.700	230 V 1N AC 50 Hz	400 V 3 AC 50 Hz	18,5	4,0	24 + 24	DN65 - DN80 - DN100	82,2
KR1030	MN.xx.S.xx.A.1.65	1.200	9.500	230 V 1N AC 50 Hz	400 V 3 AC 50 Hz	22,0	5,5	24 + 24	DN65	85,6
KR1030	MN.xx.S.xx.A.1.xxx	1.200	10.600	230 V 1N AC 50 Hz	400 V 3 AC 50 Hz	22,0	5,5	24 + 24	DN80 - DN100	85,6
KR1040	MN.xx.x.xx.A.1.xxx	2.000	13.000	230 V 1N AC 50 Hz	400 V 3 AC 50 Hz	30,0	5,5	24 + 24	DN80 - DN100 - DN125	85,6

For the configuration of the gas train, see pages 116-117.

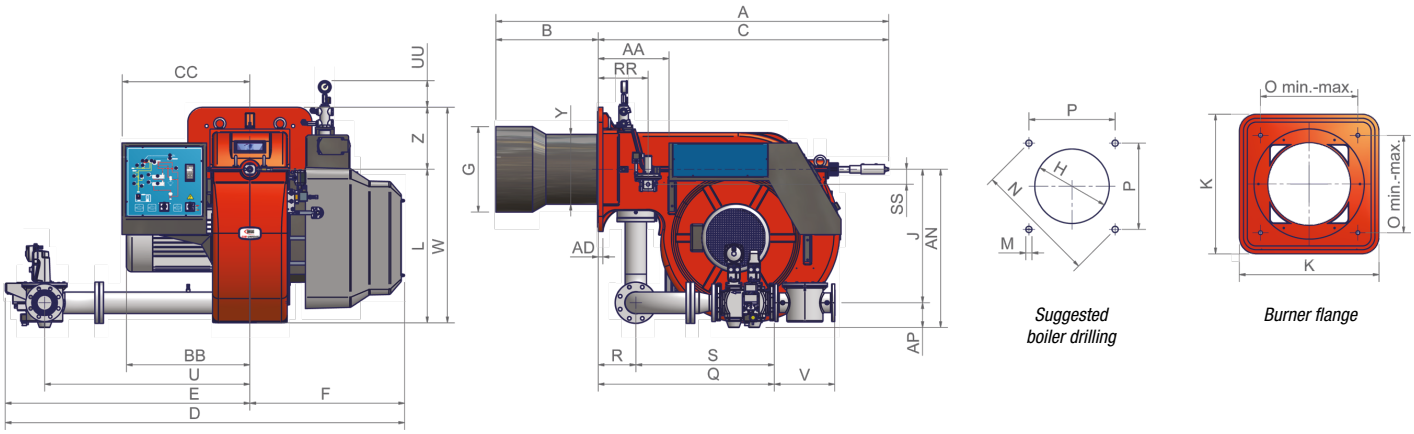

The oil pump set (pump, motor, oil tank and filter) is included, but supplied loose (not assembled on the burner).

Type	Packaging dimensions (mm)			
	l	p	h	kg
KR1025/KR1030	2.270	1.720	1.320	760
KR1030/KR1040	2270	1.720	1.320	780
Oil handling unit*	1.170	770	1.610	-

Approximate values

* Supplied underframe

Type	Model	Overall dimensions (mm)																														
		A	AA	AD	AN	AP	B	BB	C	CC	D	E	F	G	H	J	K	L	M	N	O	P	Q	R	RR	S	SS	U	UU	V	W	Y	Z
KR1025	MN.xx.S.xx.A.1.65	2088	377	25	827	118	544	641	1544	680	2121	1299	822	400	450	709	660	816	M16	651	460	460	914	200	265	714	80	1092	142	292	1146	379	330
KR1025	MN.xx.S.xx.A.1.80	2088	377	25	841	132	544	641	1544	680	2123	1301	822	400	450	709	660	816	M16	651	460	460	936	200	265	736	80	1092	142	322	1146	379	330
KR1025	MN.xx.S.xx.A.1.100	2088	377	25	854	145	544	641	1544	680	2139	1317	822	400	450	709	660	816	M16	651	460	460	842	200	265	642	80	1092	142	382	1146	379	330
KR1030	MN.xx.S.xx.A.1.65	2088	377	25	827	118	544	657	1544	680	2121	1299	822	454	504	709	660	816	M16	651	460	460	914	200	265	714	80	1092	142	292	1146	372	330
KR1030	MN.xx.S.xx.A.1.80	2088	377	25	841	132	544	657	1544	680	2123	1301	822	454	504	709	660	816	M16	651	460	460	936	200	265	736	80	1092	142	322	1146	372	330
KR1030	MN.xx.S.xx.A.1.100	2088	377	25	854	145	544	657	1544	680	2139	1317	822	454	504	709	660	816	M16	651	460	460	842	200	265	642	80	1092	142	382	1146	372	330
KR1040	MN.xx.S.xx.A.1.80	2106	377	25	841	132	544	657	1562	680	2123	1301	822	514	564	709	660	816	M16	651	460	460	936	200	265	736	80	1092	142	322	1146	408	330
KR1040	MN.xx.S.xx.A.1.100	2106	377	25	854	145	544	657	1562	680	2139	1317	822	514	564	709	660	816	M16	651	460	460	842	200	265	642	80	1092	142	382	1146	408	330
KR1040	MN.xx.S.xx.A.1.125	2106	377	25	884	175	544	657	1562	680	2254	1432	822	514	564	709	660	816	M16	651	460	460	954	200	265	754	80	1192	142	480	1146	408	330

Approximate values

MECHANICAL OPERATION

Model	Gas train	Operation	KR1025 Code	KR1025 Price €	KR1030 Code	KR1030 Price €	KR1040 Code	KR1040 Price €
HEAVY OIL 50 cSt at 50°C (7°E at 50°C)								
MN.PR.S.xx.A.1.65	DN65	PR	023081653		023081953		-	
MN.PR.S.xx.A.1.80	DN80	PR	023081753		023082053		023082253	
MN.PR.S.xx.A.1.100	DN100	PR	023081853		023082153		023082353	
MN.PR.S.xx.A.1.125	DN125	PR	-		-		023082453	
MN.MD.S.xx.A.1.65	DN65	MD(*)	023081654		023081954		-	
MN.MD.S.xx.A.1.80	DN80	MD(*)	023081754		023082054		023082254	
MN.MD.S.xx.A.1.100	DN100	MD(*)	023081854		023082154		023082354	
MN.MD.S.xx.A.1.125	DN125	MD(*)	-		-		023082454	
HEAVY OIL 400 cSt at 50°C (50°E at 50°C)								
MD.PR.S.xx.A.1.65	DN65	PR	023191653		023191953		-	
MD.PR.S.xx.A.1.80	DN80	PR	023191753		023192053		023192253	
MD.PR.S.xx.A.1.100	DN100	PR	023191853		023192153		023192353	
MD.PR.S.xx.A.1.125	DN125	PR	-		-		023192453	
MD.MD.S.xx.A.1.65	DN65	MD(*)	023191654		023191954		-	
MD.MD.S.xx.A.1.80	DN80	MD(*)	023191754		023192054		023192254	
MD.MD.S.xx.A.1.100	DN100	MD(*)	023191854		023192154		023192354	
MD.MD.S.xx.A.1.125	DN125	MD(*)	-		-		023192454	

(*) In order for the supply to be completed, the burner must be equipped with the respective modulating probe (see accessory table, page 290).

In compliance with:
- **GAR Directive 2016/426/EU**
- **Low Tension Directive 2014/35/UE**
- **Electromagnetic Compatibility Directive 2014/30/UE**
- **Machinery Directive 2006/42/CE**

ELECTRONIC OPERATION

Model	Gas train	Operation	KR1025 Code	KR1025 Price €	KR1030 Code	KR1030 Price €	KR1040 Code	KR1040 Price €
HEAVY OIL 50 cSt at 50°C (7°E at 50°C)								
MN.PR.S.xx.A.1.65.EC	DN65	PR	02308165		02308195		-	
MN.PR.S.xx.A.1.80.EC	DN80	PR	02308175		02308205		02308225	
MN.PR.S.xx.A.1.100.EC	DN100	PR	02308185		02308215		02308235	
MN.PR.S.xx.A.1.125.EC	DN125	PR	-		-		02308245	
MN.MD.S.xx.A.1.65.EC	DN65	MD(*)	02308165		02308195		-	
MN.MD.S.xx.A.1.80.EC	DN80	MD(*)	02308175		02308205		02308225	
MN.MD.S.xx.A.1.100.EC	DN100	MD(*)	02308185		02308215		02308235	
MN.MD.S.xx.A.1.125.EC	DN125	MD(*)	-		-		02308245	
HEAVY OIL 400 cSt at 50°C (50°E at 50°C)								
MD.PR.S.xx.A.1.65.EC	DN65	PR	02319165		02319195		-	
MD.PR.S.xx.A.1.80.EC	DN80	PR	02319175		02319205		02319225	
MD.PR.S.xx.A.1.100.EC	DN100	PR	02319185		02319215		02319235	
MD.PR.S.xx.A.1.125.EC	DN125	PR	-		-		02319245	
MD.MD.S.xx.A.1.65.EC	DN65	MD(*)	02319165		02319195		-	
MD.MD.S.xx.A.1.80.EC	DN80	MD(*)	02319175		02319205		02319225	
MD.MD.S.xx.A.1.100.EC	DN100	MD(*)	02319185		02319215		02319235	
MD.MD.S.xx.A.1.125.EC	DN125	MD(*)	-		-		02319245	

Model	Gas train	Operation	KR1025 Code	KR1025 Price €	KR1030 Code	KR1030 Price €	KR1040 Code	KR1040 Price €
HEAVY OIL 50 cSt at 50°C (7°E at 50°C)								
MN.MD.S.xx.A.1.65.ES	DN65	MD(*)	02308165S		02308195S		-	
MN.MD.S.xx.A.1.80.ES	DN80	MD(*)	02308175S		02308205S		02308225S	
MN.MD.S.xx.A.1.100.ES	DN100	MD(*)	02308185S		02308215S		02308235S	
MN.MD.S.xx.A.1.125.ES	DN125	MD(*)	-		-		02308245S	
HEAVY OIL 400 cSt at 50°C (50°E at 50°C)								
MD.MD.S.xx.A.1.65.ES	DN65	MD(*)	02319165S		02319195S		-	
MD.MD.S.xx.A.1.80.ES	DN80	MD(*)	02319175S		02319205S		02319225S	
MD.MD.S.xx.A.1.100.ES	DN100	MD(*)	02319185S		02319215S		02319235S	
MD.MD.S.xx.A.1.125.ES	DN125	MD(*)	-		-		02319245S	

(*) In order for the supply to be completed, the burner must be equipped with the respective modulating probe (see accessory table, page 290).

In compliance with:
- **GAR Directive 2016/426/EU**
- **Low Tension Directive 2014/35/UE**
- **Electromagnetic Compatibility Directive 2014/30/UE**
- **Machinery Directive 2006/42/CE**

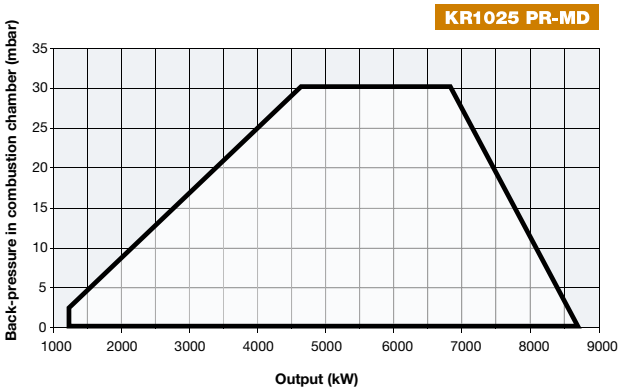

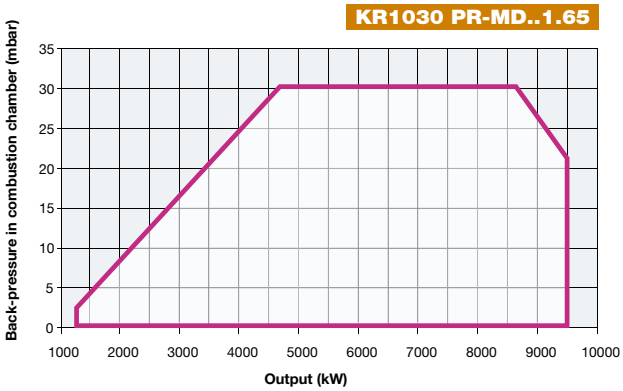

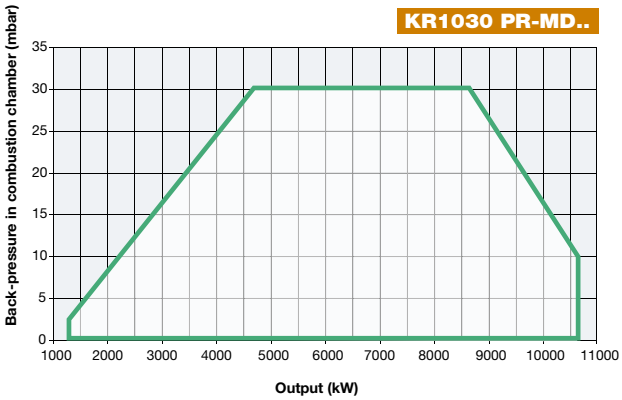

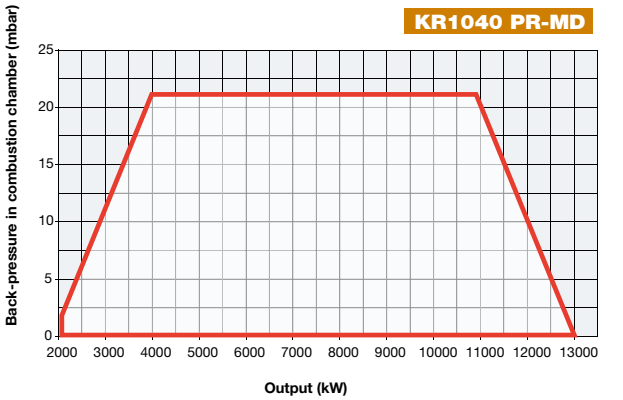

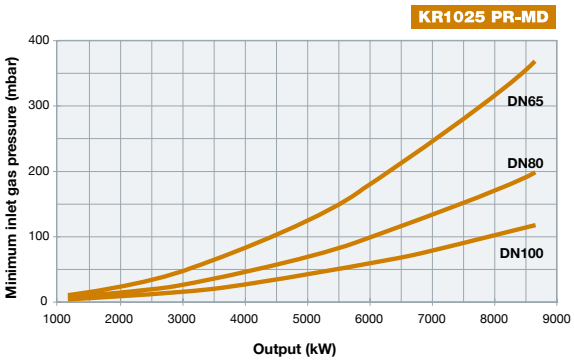

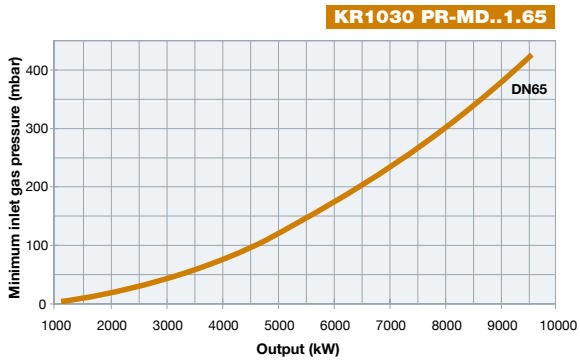

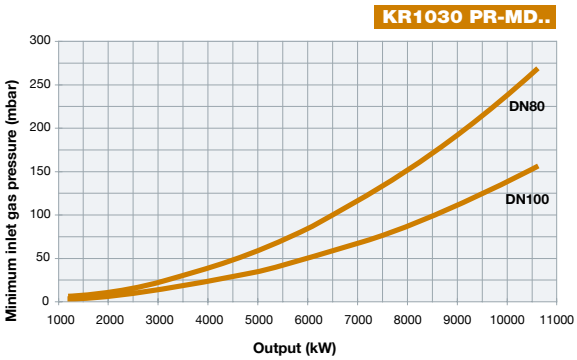

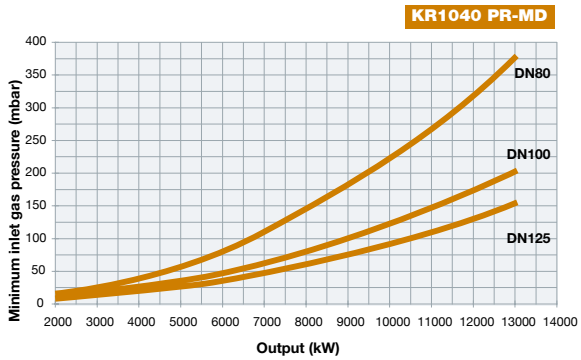

Attention: the graph shows the value of the gas output (kW) against the corresponding pressure without the combustion chamber back pressure. To know the minimum gas pressure at gas train, in order to get the gas output, it is necessary to add the boiler back pressure to the value read on the curve.

duemila SERIES KR2050 KR2060 KR2080

GAS/HEAVY OIL

MECHANICAL ATOMIZATION

These models of burners represent the most powerful aluminium version of the KR series. Thanks to their independent electric motor for the activation of the oil pump, they can burn gas and heavy oil separately. In fact, during gas firing, the oil pump motor does not operate and remains off.
These burners are, therefore, provided with an UV photocell to control the flame during the operation. They are, therefore, provided with a pre-heating tank equipped with low thermal load electrical resistance to ensure oil fluidity. All burners with progressive or modulating operation, have been built to burn fuels whose standard viscosity is 50 cSt at 50°C (7 E°at 50°C).
Upon request it is available the version for heavy oils up to 400 cSt at 50°C (50 E°at 50°C).

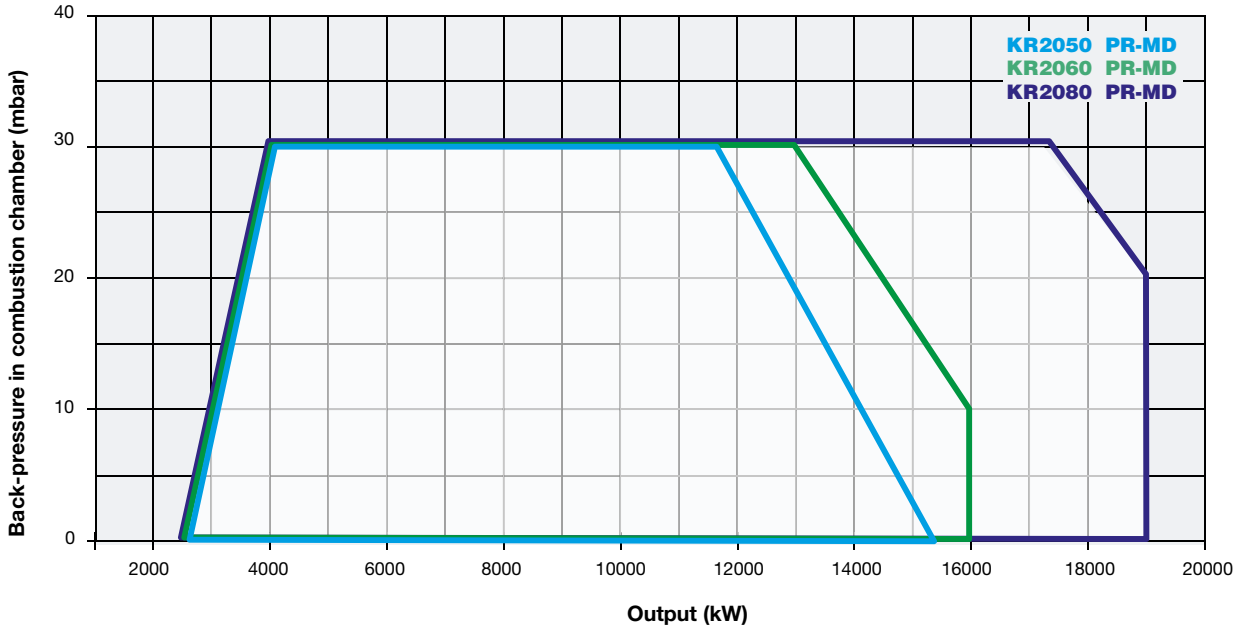

KR2050 KR2060 KR2080 duemila SERIES

TECHNICAL DETAILS

Type	Model	Power kW		Auxiliary electrical power supply	Motor electrical power supply	Fan motor	Pump motor	Resistor	Gas connections	Noise level
		min.	max.			kW	kW	kW		dBA
KR2050	MN.xx.S.xx.A.1.xxx.xx	2.500	15.200	230 V 1N AC 50 Hz	400 V 3 AC 50 Hz	37	5,5	24 + 24	DN80 - DN100 - DN125	92,5
KR2060	MN.xx.S.xx.A.1.xxx.xx	2.500	16.000	230 V 1N AC 50 Hz	400 V 3 AC 50 Hz	45	5,5	24 + 24	DN80 - DN100 - DN125	91,7
KR2080	MN.xx.S.xx.A.1.xxx.xx	2.500	19.000	230 V 1N AC 50 Hz	400 V 3 AC 50 Hz	55	5,5	24 + 24	DN100 - DN125	91,7

For the configuration of the gas train, see pages 116-117.

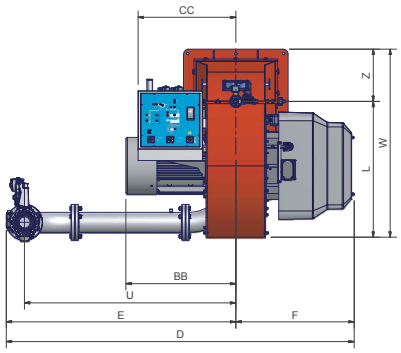

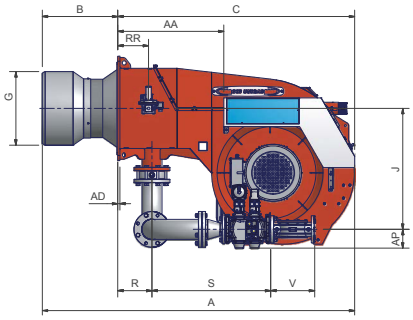

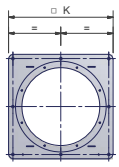

Burner flange

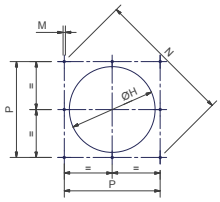

Suggested boiler drilling

The oil pump set (pump, motor, oil tank and filter) is included, but supplied loose (not assembled on the burner).

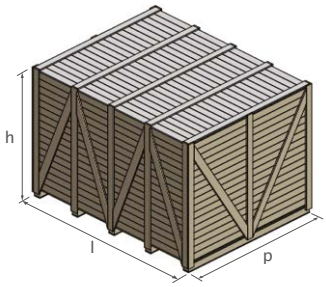

Type	Packaging dimensions (mm)			
	l	p	h	kg
KR2050	2.396	1.886	1.969	1.430
KR2060	2.396	1.886	1.969	1.510
KR2080	2.396	1.886	1.969	1.610

Approximate values

Type	Model	Overall dimensions (mm)																									
		AA	AC	AD	AE	AP	B	BB	C	CC	D	E	F	G	H	J	K	L	M	N	P	R	RR	S	U	V	W	Z
KR2050	Mx.xx.S.xx.A.1.80.xx	741	866	15	595	132	*	768	1898	735	2431	1604	827	*	*	845	730	949	M16	948	670	239	215	827	1477	310	1314	365
KR2050	Mx.xx.S.xx.A.1.100.xx	741	866	15	595	145	*	768	1898	735	2447	1620	827	*	*	845	730	949	M16	948	670	239	215	874	1477	350	1314	365
KR2050	Mx.xx.S.xx.A.1.125.xx	741	866	15	595	175	*	768	1898	735	2465	1638	827	*	*	845	730	949	M16	948	670	239	215	755	1477	480	1314	365
KR2060	Mx.xx.S.xx.A.1.80.xx	741	866	15	645	132	*	807	1890	735	2309	1463	846	*	*	775	850	949	M16	1117	790	239	215	827	1336	310	1374	425
KR2060	Mx.xx.S.xx.A.1.100.xx	741	866	15	645	145	*	807	1890	735	2325	1479	846	*	*	775	850	949	M16	1117	790	239	215	874	1336	350	1374	425
KR2060	Mx.xx.S.xx.A.1.125.xx	741	866	15	645	175	*	807	1890	735	2343	1497	846	*	*	775	850	949	M16	1117	790	239	215	755	1336	480	1374	425
KR2080	Mx.xx.S.xx.A.1.100.xx	741	866	15	645	145	*	885	1890	735	2325	1479	846	*	*	775	850	949	M16	1117	790	239	215	874	1336	350	1374	425
KR2080	Mx.xx.S.xx.A.1.125.xx	741	866	15	645	175	*	885	1890	735	2343	1497	846	*	*	775	850	949	M16	1117	790	239	215	755	1336	480	1374	425

* The B, G, H dimensions must be confirmed from our technical DPT.
Approximate values

Monoblock burners 2000 series are supplied complete with a steel supporting frame: burner installation and manutention are greatly simplified.
The frame is equipped with wheels to easily move the burner, and its height is adjustable to match any type of boiler or furnace.

SUPPORTING FRAME FOR BURNERS 2050 SERIES

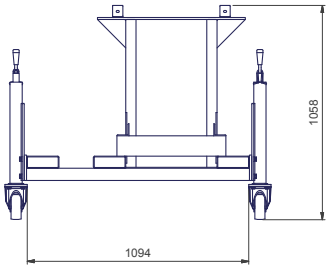

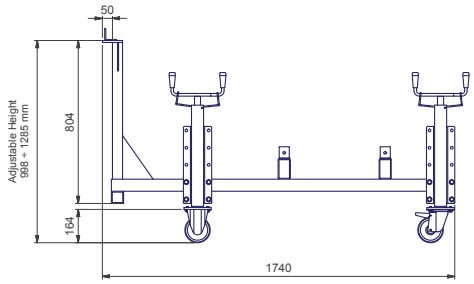

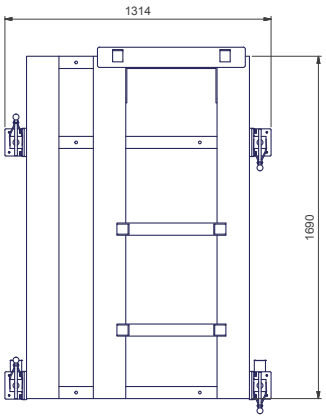

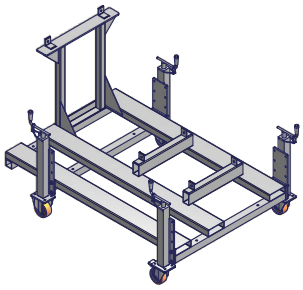

SUPPORTING FRAME FOR BURNERS 2060/2080 SERIES

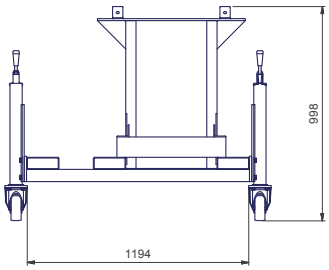

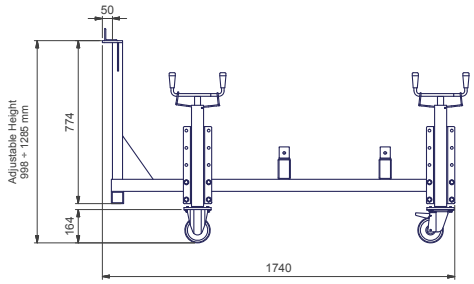

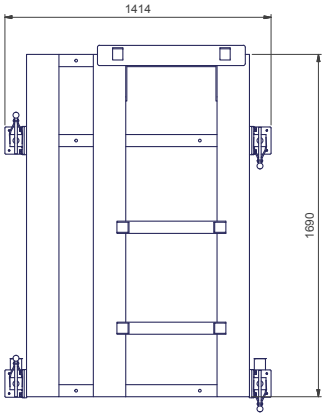

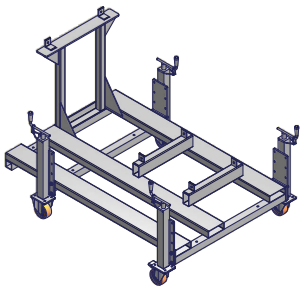

ELECTRONIC OPERATION

Model	Gas train	Operation	KR2050 Code	KR2050 Price €	KR2060 Code	KR2060 Price €	KR2080 Code	KR2080 Price €
HEAVY OIL 50 cSt at 50°C (7°E at 50°C)								
MD-.PR.S.xx.A.1.80.EC	DN80	PR	03219015C		-		-	
MD-.PR.S.xx.A.1.100.EC	DN100	PR	03219025C		-		-	
MD-.PR.S.xx.A.1.125.EC	DN125	PR	03219035C		-		-	
MD-.MD.S.xx.A.1.80.EC	DN80	MD(*)	03219015G		-		-	
MD-.MD.S.xx.A.1.100.EC	DN100	MD(*)	03219025G		-		-	
MD-.MD.S.xx.A.1.125.EC	DN125	MD(*)	03219035G		-		-	
MD-.MD.S.xx.A.1.80.ES	DN80	MD(*)	03219015S		03219045S		-	
MD-.MD.S.xx.A.1.100.ES	DN100	MD(*)	03219025S		03219055S		03219085S	
MD-.MD.S.xx.A.1.125.ES	DN125	MD(*)	03219035S		03219065S		03219095S	

(*) In order for the supply to be completed, the burner must be equipped with the respective modulating probe (see accessory table, page 290).

In compliance with:
- GAR Directive 2016/426/EU
- Low Tension Directive 2014/35/UE
- Electromagnetic Compatibility Directive 2014/30/UE
- Machinery Directive 2006/42/CE

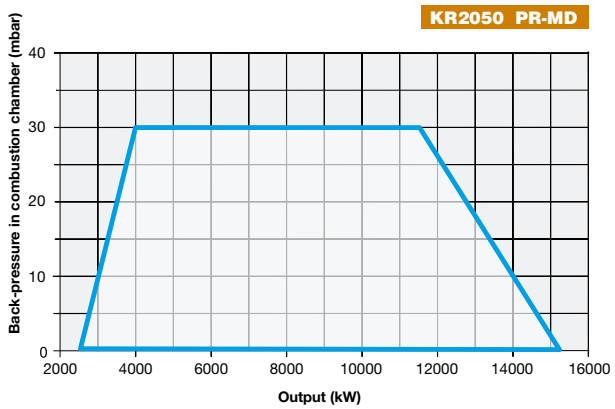

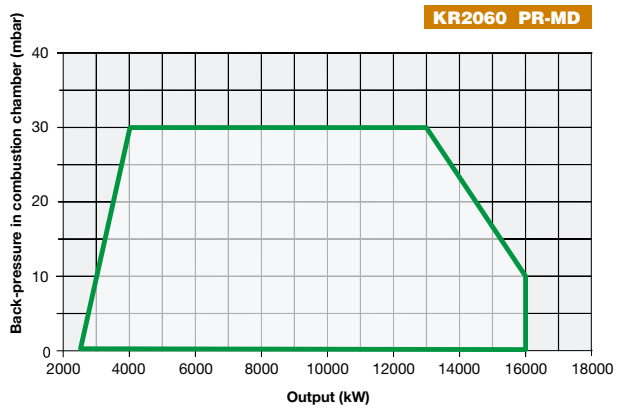

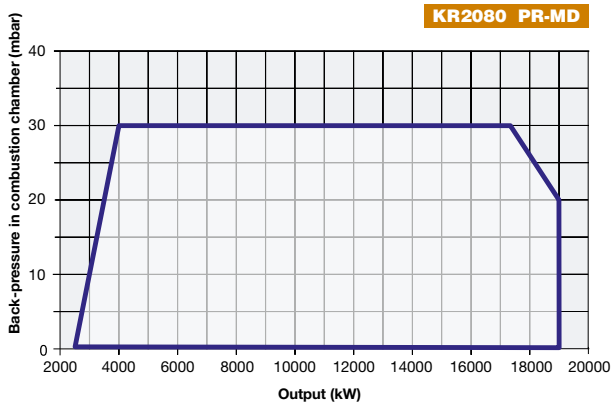

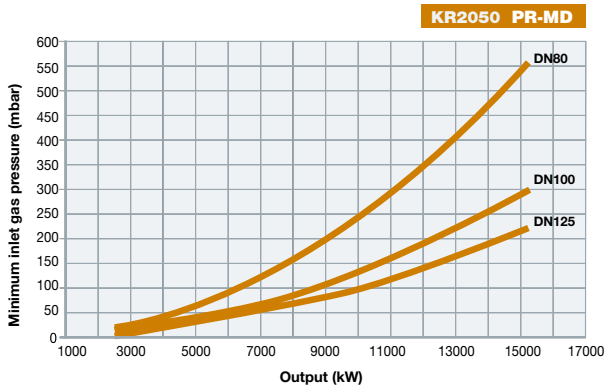

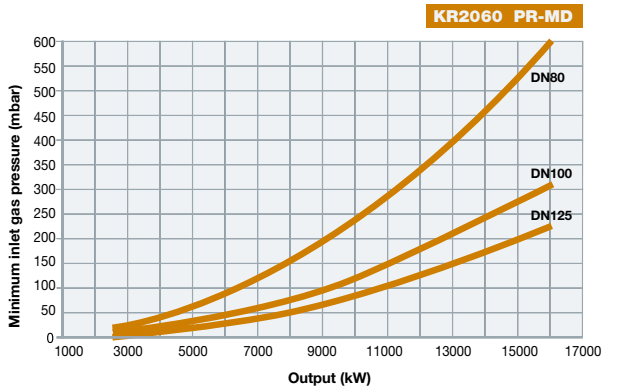

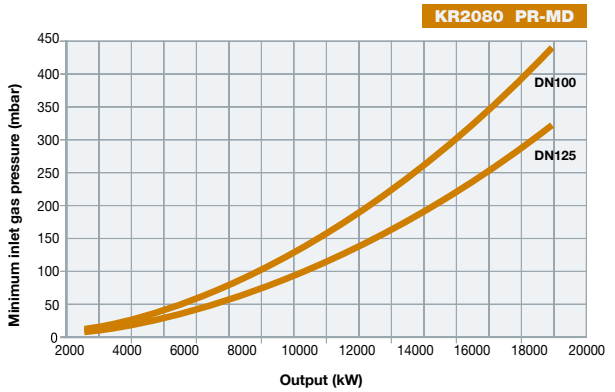

Attention: the graph shows the value of the gas output (kW) against the corresponding pressure without the combustion chamber back pressure. To know the minimum gas pressure at gas train, in order to get the gas output, it is necessary to add the boiler back pressure to the value read on the curve.

KPBY91 KPBY92 novanta SERIES

PNEUMATIC ATOMIZATION WITH ELECTRONIC OPERATION

This particular GAS/HEAVY OIL burners series has been developed in order to use compressed air or, alternatively, steam as a fluid to atomize the fuel, with the aim to accomplish a better combustion result compared to the one gained using the traditional atomizing systems.
These burners are provided with a low pressure nozzle which allows consumption levels to be kept low and which also limits the general wear of the whole atomization system.
All burners are progressive and are completed with an electrical control cabinet and with a pump oil to be installed by the final user. Furthermore, the nozzle performs an automatic cleaning process at the end of each cycle.
The plant must be provided with compressed air or steam at 8 bar.
Burners are ignited through a pilot which can work either with natural gas or LPG and are suitable to be used with fuels with a viscosity up to 4.000 cSt at 50°C (530°E at 50°).
The standard version of burners is set up to atomize with compressed air only, when steam is requested for the atomization, the burner will be modified though a specific kit.
However, compressed air must be always present at the burner in the following cases:
- cold start ups when no steam is available
- valve opening for automatic nozzle cleaning.

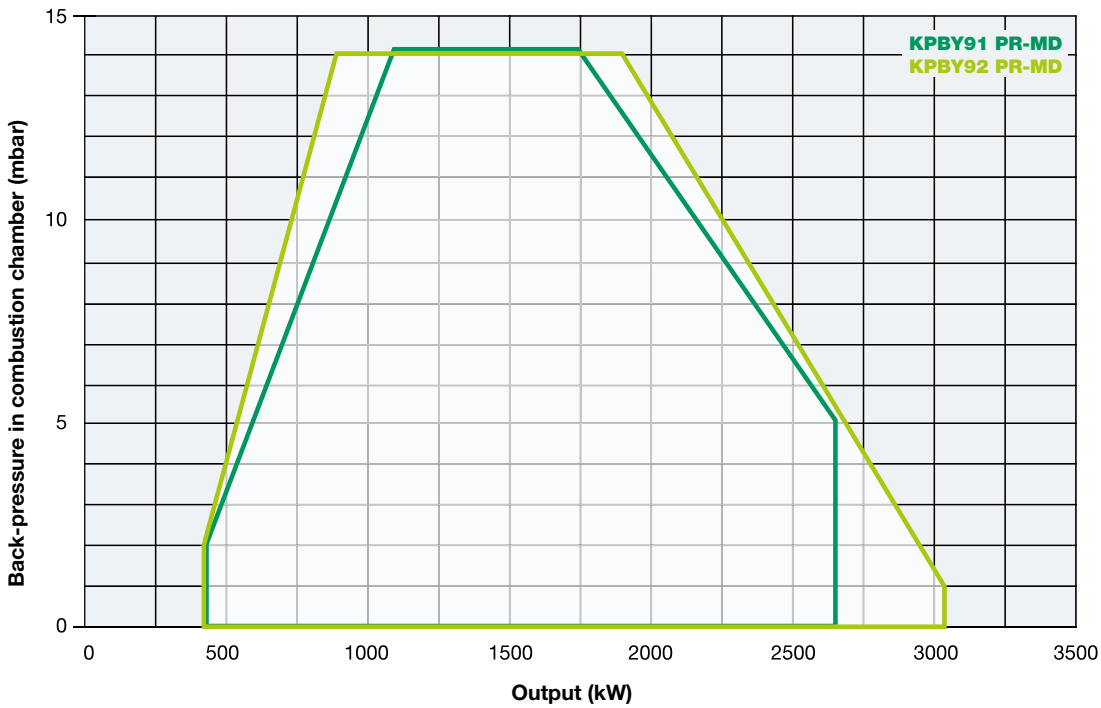

novanta SERIES KPBY91 KPBY92

PNEUMATIC ATOMIZATION WITH ELECTRONIC OPERATION

TECHNICAL DETAILS

Type	Model	Power kW		Auxiliary electrical power supply	Motor electrical power supply	Fan motor	Pump motor	Resistor	Gas connections
		min.	max.			kW	kW	kW	Rp
KPBY91	MH.xx.S.xx.A.1.xxx.xx	480	2.670	230 V 1N AC 50 Hz	400 V 3 AC 50 Hz	4,0	0,75	8,0	2” - DN65 - DN80 - DN100
KPBY92	MH.xx.S.xx.A.1.xxx.xx	480	3.050	230 V 1N AC 50 Hz	400 V 3 AC 50 Hz	5,5	0,75	12,0	2” - DN65 - 80 - 100

For the configuration of the gas train, see pages 116-117.

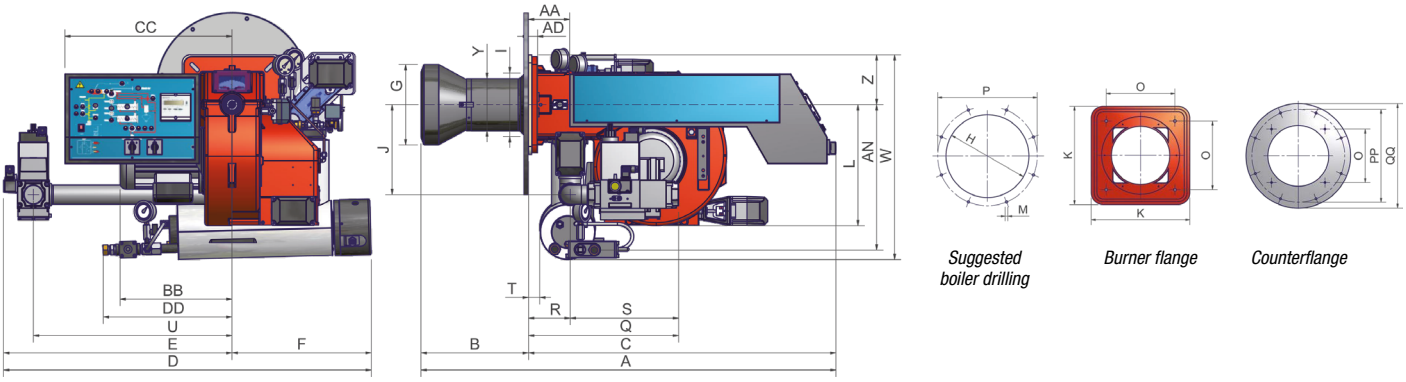

Low pressure pump set (pump, motor and filter) is included, but supplied loose (not assembled on the burner).

Type	Model	Overall dimensions (mm)																													
		DN	A	AA	AN	B*	BB	C	CC	D	DD	E	F	G	H	J	K	L	M	O		P	R	S	U	V	W	Z	T	Y	PP	QQ
																				min.	max											
KPBY91	MH.xx.x.xx.1.50	50	1475	240	600	490	419	985	532	1372	510	852	520	365	405	456	360	550	M12	280	310	500	166	374	624	-	798	185	43	228	500	550
KPBY91	MH.xx.x.xx.1.65	65	1475	240	600	490	419	985	532	1569	510	1049	520	365	405	456	360	550	M12	280	310	500	166	483	843	292	798	185	43	228	500	550
KPBY91	MH.xx.x.xx.1.80	80	1475	240	600	490	419	985	532	1604	510	1084	520	365	405	456	360	550	M12	280	310	500	166	535	875	322	798	185	43	228	500	550
KPBY91	MH.xx.x.xx.1.100	100	1475	240	600	490	419	985	532	1687	510	1167	520	365	405	456	360	550	M12	280	310	500	166	642	942	382	798	185	43	228	500	550
KPBY92	MH.xx.x.xx.1.50	50	1475	240	600	490	419	985	532	1372	510	852	520	365	405	456	360	550	M12	280	310	500	166	374	624	-	798	185	43	228	500	550
KPBY92	MH.xx.x.xx.1.65	65	1475	240	600	490	419	985	532	1569	510	1049	520	365	405	456	360	550	M12	280	310	500	166	483	843	292	798	185	43	228	500	550
KPBY92	MH.xx.x.xx.1.80	80	1475	240	600	490	419	985	532	1604	510	1084	520	365	405	456	360	550	M12	280	310	500	166	535	875	322	798	185	43	228	500	550
KPBY92	MH.xx.x.xx.1.100	100	1475	240	600	490	419	985	532	1687	510	1167	520	365	405	456	360	550	M12	280	310	500	166	642	942	382	798	185	43	228	500	550

Approximate values
* The dimension B is reduced by 20 mm with counterflange and gasket.

MECHANICAL OPERATION

Model	Gas train	Operation	KPBY91 Code	KPBY91 Price €	KPBY92 Code	KPBY92 Price €
HEAVY OIL 4000 cSt at 50°C (530°E at 50°C)						
MH.PR.S.xx.A.1.50.EC	2”	PR	01219275C		01219315C	
MH.PR.S.xx.A.1.65.EC	DN65	PR	01219285C		01219325C	
MH.PR.S.xx.A.1.80.EC	DN80	PR	01219295C		01219335C	
MH.PR.S.xx.A.1.100.EC	DN100	PR	01219305C		01219345C	
MH.MD.S.xx.A.1.50.EC	2”	MD(*)	01219275G		01219315G	
MH.MD.S.xx.A.1.65.EC	DN65	MD(*)	01219285G		01219325G	
MH.MD.S.xx.A.1.80.EC	DN80	MD(*)	01219295G		01219335G	
MH.MD.S.xx.A.1.100.EC	DN100	MD(*)	01219305G		01219345G	

(*) In order for the supply to be completed, the burner must be equipped with the respective modulating probe (see accessory table, page 290).

In compliance with:
- GAR Directive 2016/426/EU
- Low Tension Directive 2014/35/UE
- Electromagnetic Compatibility Directive 2014/30/UE
- Machinery Directive 2006/42/CE

KPBY91 KPBY92

PNEUMATIC ATOMIZATION WITH ELECTRONIC OPERATION

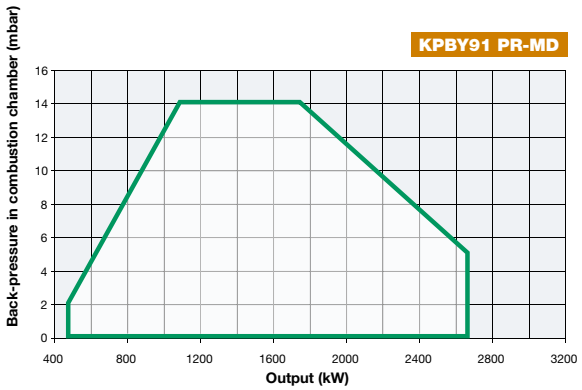

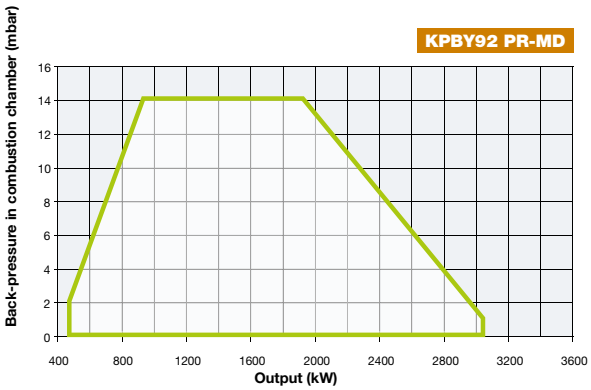

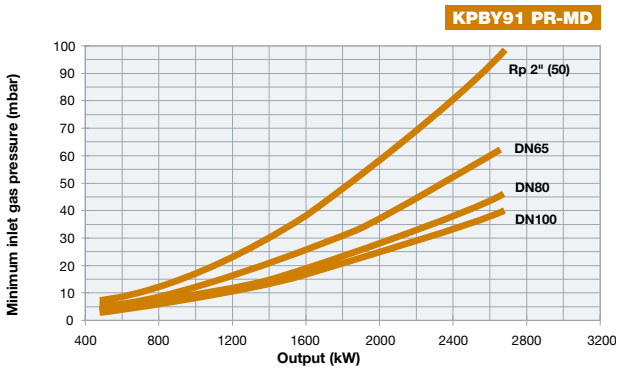

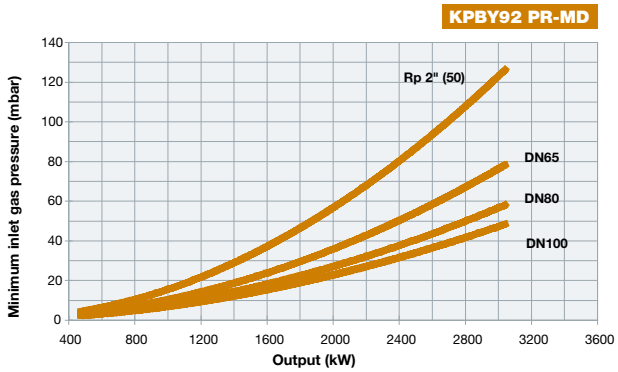

Attention: the graph shows the value of the gas output (kW) against the corresponding pressure without the combustion chamber back pressure. To know the minimum gas pressure at gas train, in order to get the gas output, it is necessary to add the boiler back pressure to the value read on the curve.

cinquecento SERIES

KRBY512 KRBY515 KRBY520 KRBY525

PNEUMATIC ATOMIZATION WITH ELECTRONIC OPERATION

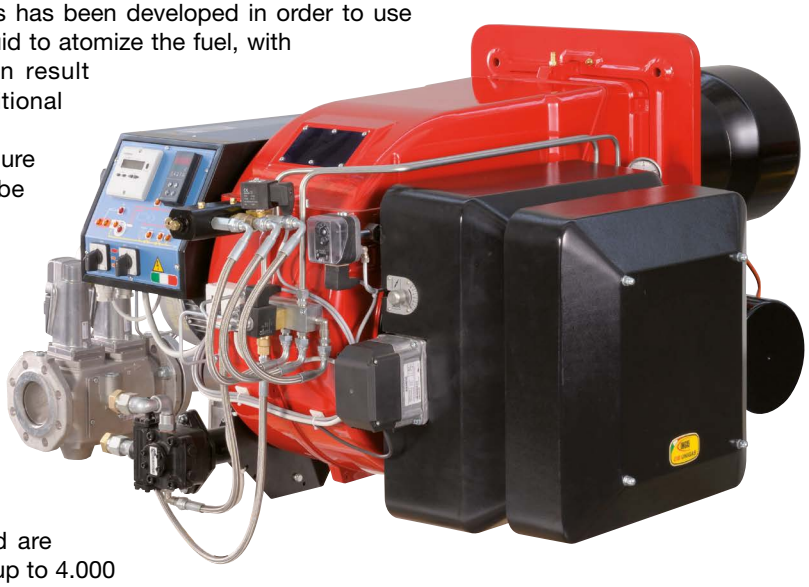

This particular GAS/HEAVY OIL burners series has been developed in order to use compressed air or, alternatively, steam as a fluid to atomize the fuel, with the aim to accomplish a better combustion result compared to the one gained using the traditional atomizing systems.
These burners are provided with a low pressure nozzle which allows consumption levels to be kept low and which also limits the general wear of the whole atomization system.
All burners are progressive and are completed with an electrical control cabinet and with a pump oil to be installed by the final user. Furthermore, the nozzle performs an automatic cleaning process at the end of each cycle.
The plant must be provided with compressed air or steam at 8 bar.
Burners are ignited through a pilot which can work either with natural gas or LPG and are suitable to be used with fuels with a viscosity up to 4.000 cSt at 50°C (530°E at 50°).
The standard version of burners is set up to atomize with compressed air only, when steam is requested for the atomization, the burner will be modified though a specific kit.
However, compressed air must be always present at the burner in the following cases:
- cold start ups when no steam is available
- valve opening for automatic nozzle cleaning.

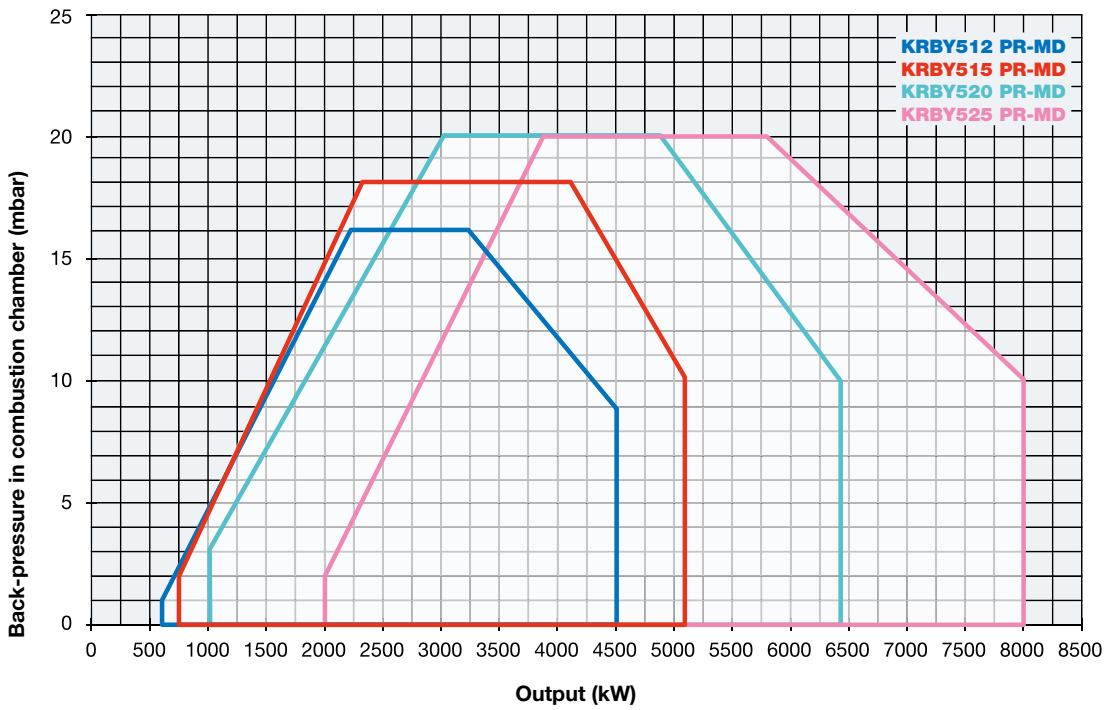

cinquecento SERIES
KRBY512 KRBY515 KRBY520 KRBY525

GAS/HEAVY OIL

PNEUMATIC ATOMIZATION WITH ELECTRONIC OPERATION

TECHNICAL DETAILS

Type	Model	Power kW		Auxiliary electrical power supply	Motor electrical power supply	Fan motor	Pump motor	Resistor	Gas connections	Noise level
		min.	max.			kW	kW	kW	Rp	dBA
KRBY512	MH.xx.S.xx.A.1.xxx.xx	600	4.500	230 V 1N AC 50 Hz	400 V 3 AC 50 Hz	9,2	0,75	18	2" - DN65 - DN80 - DN100	81,7
KRBY515	MH.xx.S.xx.A.1.xxx.xx	770	5.200	230 V 1N AC 50 Hz	400 V 3 AC 50 Hz	11,0	0,75	18	2" - DN65 - DN80 - DN100	82,3
KRBY520	MH.xx.S.xx.A.1.xxx.xx	1.000	6.400	230 V 1N AC 50 Hz	400 V 3 AC 50 Hz	15,0	0,75	24	2" - DN65 - DN80 - DN100	83,2
KRBY525	MH.xx.S.xx.A.1.xxx.xx	2.000	8.000	230 V 1N AC 50 Hz	400 V 3 AC 50 Hz	18,5	0,75	24	DN65 - DN80 - DN100	84,9

For the configuration of the gas train, see pages 116-117.

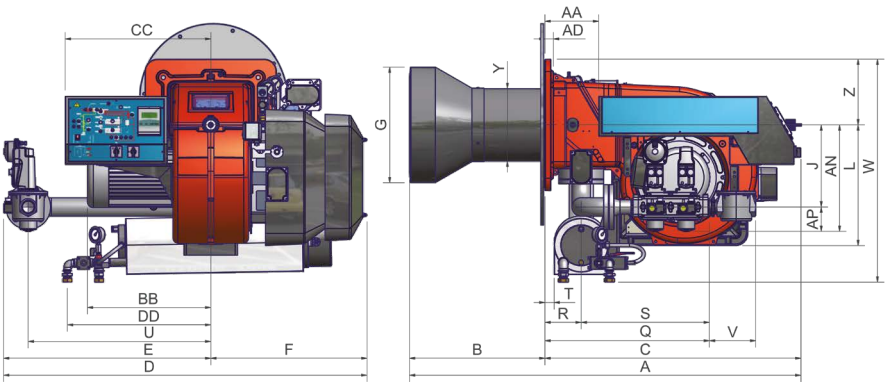

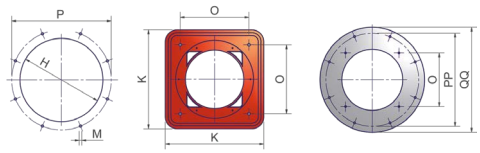

Suggested boiler drilling *Burner flange* *Counterflange*

Low pressure pump set (pump, motor and filter) is included, but supplied loose (not assembled on the burner).

Type	Model	Overall dimensions (mm)																													
		DN	A	AA	AN	AP	B*	BB	C	CC	D	E	F	G	H	J	K	L	M	O	P	Q	R	S	U	V	W	Z	Y	PP	QQ
KRBY512	MH.xx.x.xx.A.1.50	50	1607	523	594	100	540	508	1067	636	1512	870	642	456	506	494	540	560	M14	390	800	755	150	605	750	216	916	270	328	800	850
KRBY512	MH.xx.x.xx.A.1.65	65	1607	523	612	118	540	508	1067	636	1517	875	642	456	506	494	540	560	M14	390	800	633	150	485	750	292	916	270	328	800	850
KRBY512	MH.xx.x.xx.A.1.80	80	1607	523	626	132	540	508	1067	636	1624	986	642	456	506	494	540	560	M14	390	800	685	150	535	858	322	916	270	328	800	850
KRBY512	MH.xx.x.xx.A.1.100	100	1607	523	639	145	540	508	1067	636	1727	1085	642	456	506	494	540	560	M14	390	800	792	150	642	942	382	916	270	328	800	850
KRBY515	MH.xx.x.xx.A.1.50	50	1623	523	594	100	556	508	1067	636	1512	870	642	475	525	494	540	560	M14	390	800	755	150	605	750	216	916	270	328	800	850
KRBY515	MH.xx.x.xx.A.1.65	65	1623	523	612	118	556	508	1067	636	1517	875	642	475	525	494	540	560	M14	390	800	633	150	485	750	292	916	270	328	800	850
KRBY515	MH.xx.x.xx.A.1.80	80	1623	523	626	132	556	508	1067	636	1624	986	642	475	525	494	540	560	M14	390	800	685	150	535	858	322	916	270	328	800	850
KRBY515	MH.xx.x.xx.A.1.100	100	1623	523	639	145	556	508	1067	636	1727	1085	642	475	525	494	540	560	M14	390	800	792	150	642	942	382	916	270	328	800	850
KRBY520	MH.xx.x.xx.A.1.50	50	1650	523	594	100	583	508	1067	636	1512	870	642	527	577	494	540	560	M14	390	800	755	150	605	750	216	916	270	328	800	850
KRBY520	MH.xx.x.xx.A.1.65	65	1650	523	612	118	583	508	1067	636	1517	875	642	527	577	494	540	560	M14	390	800	633	150	485	750	292	916	270	328	800	850
KRBY520	MH.xx.x.xx.A.1.80	80	1650	523	626	132	583	508	1067	636	1624	986	642	527	577	494	540	560	M14	390	800	685	150	535	858	322	916	270	328	800	850
KRBY520	MH.xx.x.xx.A.1.100	100	1650	523	639	145	583	508	1067	636	1727	1085	642	527	577	494	540	560	M14	390	800	792	150	642	942	382	916	270	328	800	850
KRBY525	MH.xx.x.xx.A.1.65	65	1619	523	612	118	552	508	1067	636	1517	875	642	572	632	494	540	560	M14	390	800	633	150	485	750	292	916	270	328	800	850
KRBY525	MH.xx.x.xx.A.1.80	80	1619	523	626	132	552	508	1067	636	1624	986	642	572	632	494	540	560	M14	390	800	685	150	535	858	322	916	270	328	800	850
KRBY525	MH.xx.x.xx.A.1.100	100	1619	523	639	145	552	508	1067	636	1727	1085	642	572	632	494	540	560	M14	390	800	792	150	642	942	382	916	270	328	800	850

Approximate values

* The dimension B is reduced by 25 mm with counterflange and gasket.

MECHANICAL OPERATION

Model	Gas train	Operation	KRBY512 Code	KRBY512 Price €	KRBY515 Code	KRBY515 Price €
HEAVY OIL 4000 cSt at 50°C (530°E at 50°C)						
MH.PR.S.xx.A.1.50.EC	2”	PR	02919585C		02919625C	
MH.PR.S.xx.A.1.65.EC	DN65	PR	02919595C		02919635C	
MH.PR.S.xx.A.1.80.EC	DN80	PR	02919605C		02919645C	
MH.PR.S.xx.A.1.100.EC	DN100	PR	02919615C		02919655C	
MH.MD.S.xx.A.1.50.EC	2”	MD(*)	02919585G		02919625G	
MH.MD.S.xx.A.1.65.EC	DN65	MD(*)	02919595G		02919635G	
MH.MD.S.xx.A.1.80.EC	DN80	MD(*)	02919605G		02919645G	
MH.MD.S.xx.A.1.100.EC	DN100	MD(*)	02919615G		02919655G	

Model	Gas train	Operation	KRBY520 Code	KRBY520 Price €	KRBY525 Code	KRBY525 Price €
HEAVY OIL 4000 cSt at 50°C (530°E at 50°C)						
MH.PR.S.xx.A.1.50.EC	2”	PR	02919665C		-	
MH.PR.S.xx.A.1.65.EC	DN65	PR	02919675C		02919705C	
MH.PR.S.xx.A.1.80.EC	DN80	PR	02919685C		02919715C	
MH.PR.S.xx.A.1.100.EC	DN100	PR	02919695C		02919725C	
MH.MD.S.xx.A.1.50.EC	2”	MD(*)	02919665G		-	
MH.MD.S.xx.A.1.65.EC	DN65	MD(*)	02919675G		02919705G	
MH.MD.S.xx.A.1.80.EC	DN80	MD(*)	02919685G		02919715G	
MH.MD.S.xx.A.1.100.EC	DN100	MD(*)	02919695G		02919725G	

(*) In order for the supply to be completed, the burner must be equipped with the respective modulating probe (see accessory table, page 290).

In compliance with:
- **GAR Directive 2016/426/EU**
- **Low Tension Directive 2014/35/UE**
- **Electromagnetic Compatibility Directive 2014/30/UE**
- **Machinery Directive 2006/42/CE**

KRBY512 KRBY515 KRBY520 KRBY525

PNEUMATIC ATOMIZATION WITH ELECTRONIC OPERATION

GAS/HEAVY OIL

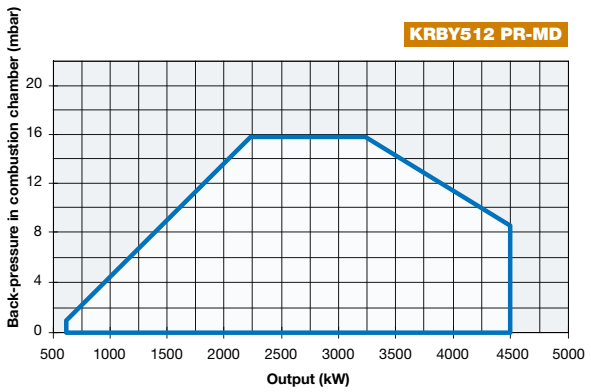

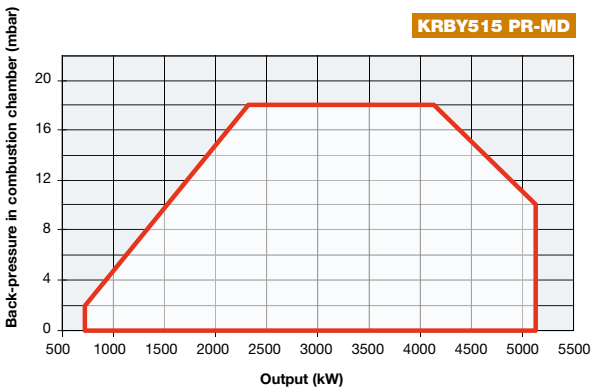

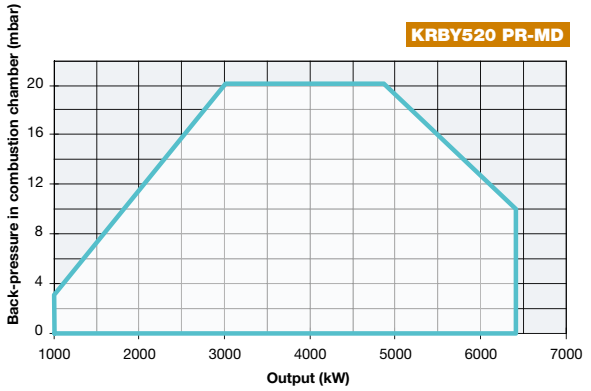

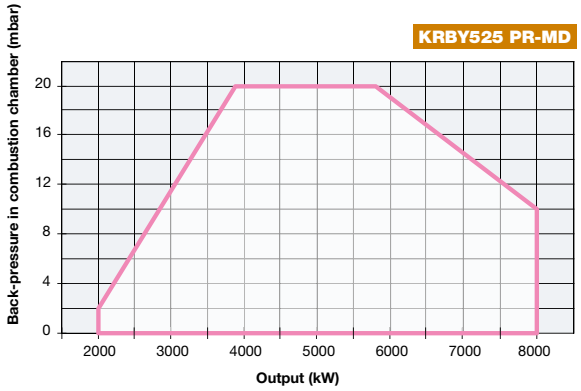

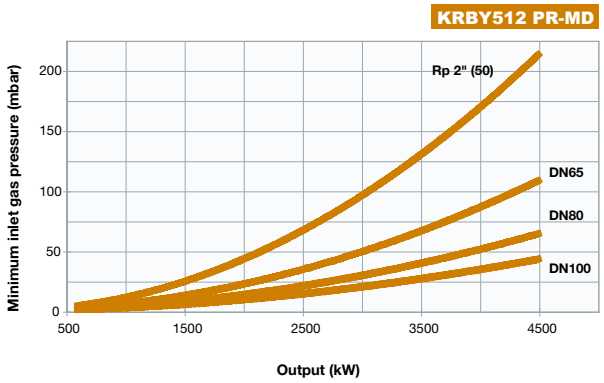

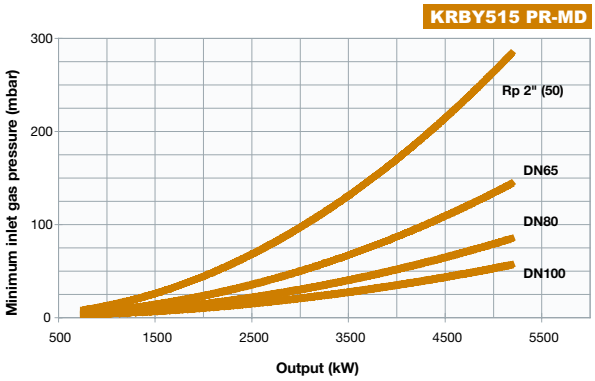

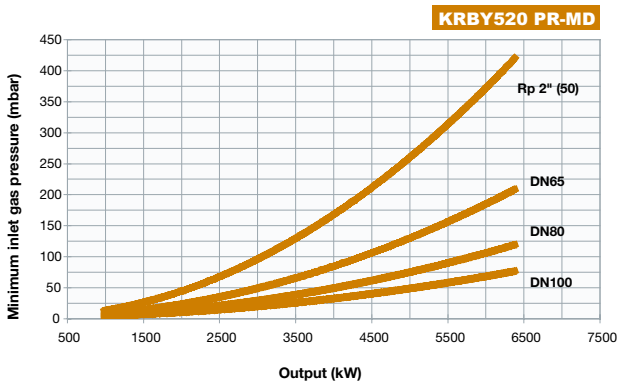

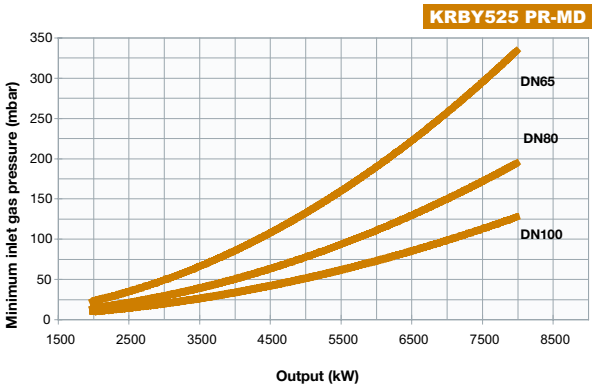

Attention: the graph shows the value of the gas output (kW) against the corresponding pressure without the combustion chamber back pressure. To know the minimum gas pressure at gas train, in order to get the gas output, it is necessary to add the boiler back pressure to the value read on the curve.

KRBY1025 KRBY1030 KRBY1040 mille SERIES

PNEUMATIC ATOMIZATION WITH ELECTRONIC OPERATION

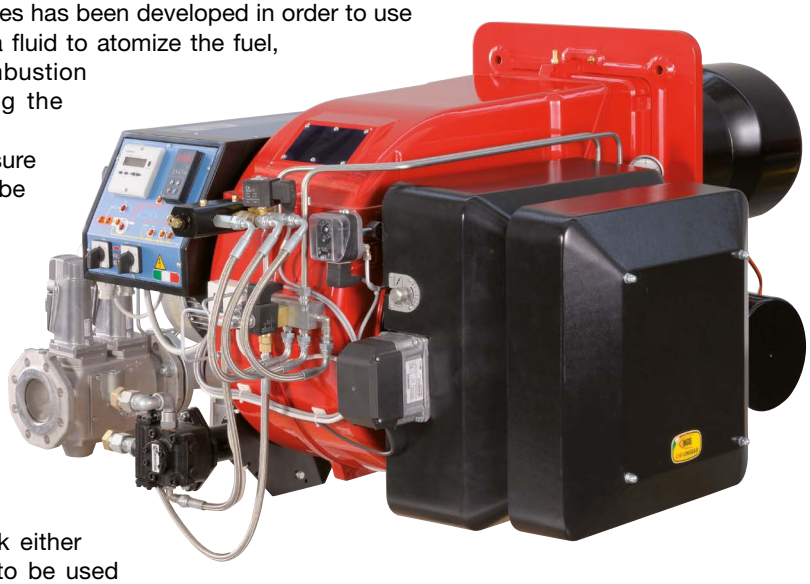

This particular GAS/HEAVY OIL burners series has been developed in order to use compressed air or, alternatively, steam as a fluid to atomize the fuel, with the aim to accomplish a better combustion result compared to the one gained using the traditional atomizing systems.
These burners are provided with a low pressure nozzle which allows consumption levels to be kept low and which also limits the general wear of the whole atomization system.
All burners are progressive and are completed with an electrical control cabinet and with a pump oil to be installed by the final user. Furthermore, the nozzle performs an automatic cleaning process at the end of each cycle.
The plant must be provided with compressed air or steam at 8 bar. Burners are ignited through a pilot which can work either with natural gas or LPG and are suitable to be used with fuels with a viscosity up to 4.000 cSt at 50°C (530°E at 50°).
The standard version of burners is set up to atomize with compressed air only, when steam is requested for the atomization, the burner will be modified though a specific kit.
However, compressed air must be always present at the burner in the following cases:
- cold start ups when no steam is available
- valve opening for automatic nozzle cleaning.

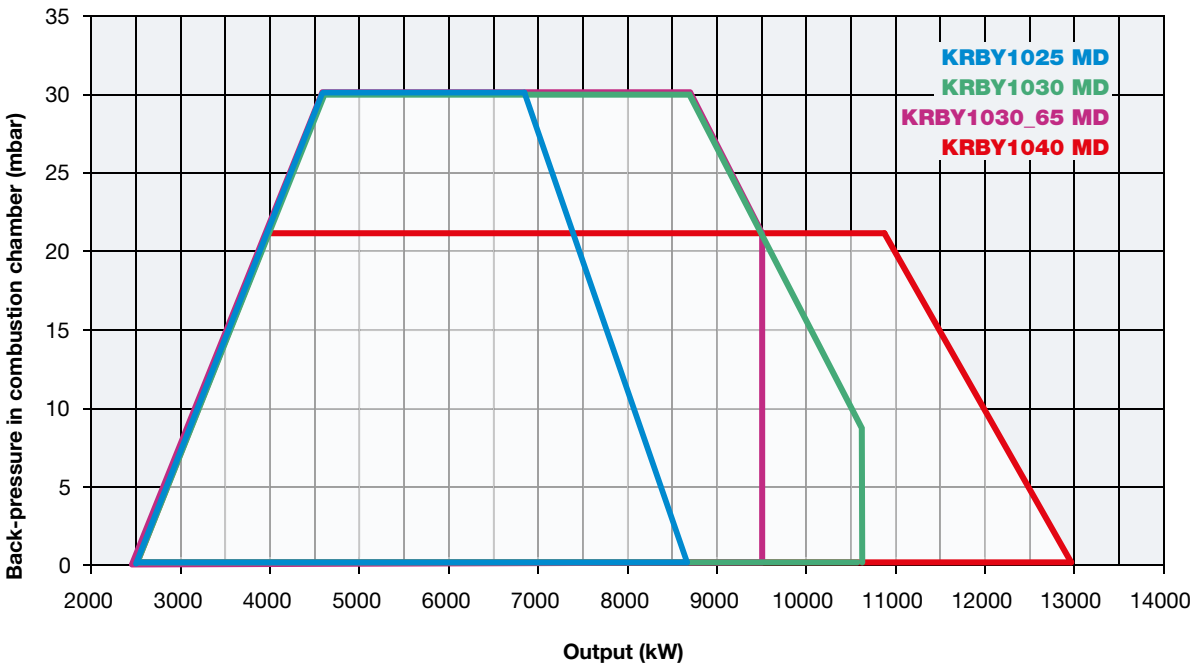

KRBY1025 KRBY1030 KRBY1040

GAS/HEAVY OIL

PNEUMATIC ATOMIZATION WITH ELECTRONIC OPERATION

TECHNICAL DETAILS

Type	Model	Power kW		Auxiliary electrical power supply	Motor electrical power supply	Fan motor	Pump motor	Resistor	Gas connections	Noise level
		min.	max.			kW	kW	kW		dBA
KRBY1025	MH.xx.S.xx.A.1.xxx.xx	2.550	8.700	230 V 1N AC 50 Hz	400 V 3 AC 50 Hz	18,5	0,75	24	DN65 - DN80 - DN100	82,2
KRBY1030	MH.H.xx.S.xx.1.65.xx	2.550	9.500	230 V 1N AC 50 Hz	400 V 3 AC 50 Hz	22,0	1,10	18+18	DN65	85,6
KRBY1030	MH.xx.S.xx.A.1.xxx.xx	2.550	10.600	230 V 1N AC 50 Hz	400 V 3 AC 50 Hz	22,0	1,10	18+18	DN80 - DN100	85,6
KRBY1040	MH.xx.S.xx.A.1.xxx.xx	2.550	13.000	230 V 1N AC 50 Hz	400 V 3 AC 50 Hz	30,0	1,10	24+24	DN80 - DN100 - DN125	85,6

For the configuration of the gas train, see pages 116-117.

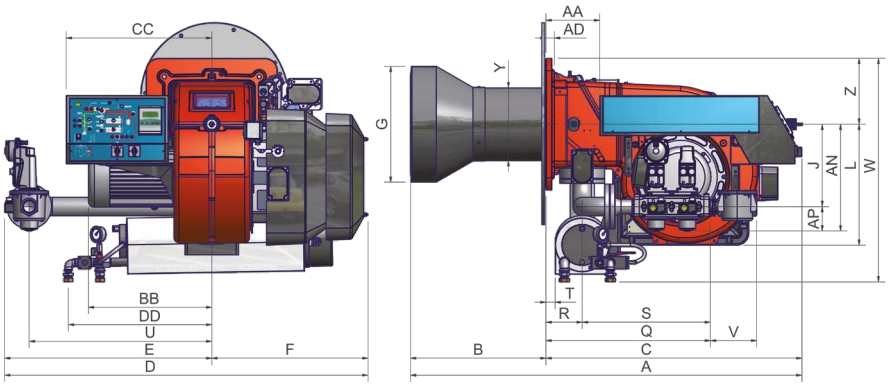

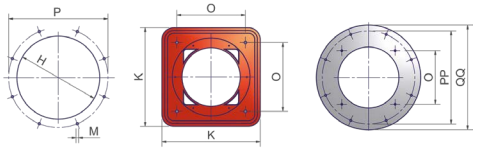

Suggested boiler drilling *Burner flange* *Counterflange*

Low pressure pump set (pump, motor and filter) is included, but supplied loose (not assembled on the burner).

Type	Model	Overall dimensions (mm)																											
		A	AA	AN	AP	B*	BB	C	CC	D	E	F	G	J	H	K	L	M	O	P	Q	R	S	U	V	W	Z	Y	PP	QQ
KRBY1025	MH.xx.x.xx.1.65	2095	377	816	118	551	641	1544	680	2121	1299	822	572	494	632	660	816	M16	460	800	914	200	714	1092	292	916	270	379	800	900
KRBY1025	MH.xx.x.xx.1.80	2095	377	816	132	551	641	1544	680	2123	1301	822	572	494	632	660	816	M16	460	800	936	200	736	1092	322	916	270	379	800	900
KRBY1025	MH.xx.x.xx.1.100	2095	377	816	145	551	641	1544	680	2139	1317	822	572	494	632	660	816	M16	460	800	942	200	642	1092	382	916	270	379	800	900
KRBY1030	MH.xx.x.xx.1.65	2124	377	816	118	580	657	1544	680	2121	1299	822	600	494	660	660	816	M16	460	800	914	200	714	1092	292	916	270	384	800	900
KRBY1030	MH.xx.x.xx.1.80	2124	377	816	132	580	657	1544	680	2123	1301	822	600	494	660	660	816	M16	460	800	936	200	736	1092	322	916	270	384	800	900
KRBY1030	MH.xx.x.xx.1.100	2124	377	816	145	580	657	1544	680	2139	1317	822	600	494	600	660	816	M16	460	800	942	200	642	1092	382	916	270	384	800	900
KRBY1040	MH.xx.x.xx.1.80	2133	377	816	118	571	657	1562	680	2123	1301	822	671	494	731	660	816	M16	460	800	914	200	736	1092	292	916	270	384	800	900
KRBY1040	MH.xx.x.xx.1.100	2133	377	816	132	571	657	1562	680	2129	1317	822	671	494	731	660	816	M16	460	800	936	200	842	1092	322	916	270	384	800	900
KRBY1040	MH.xx.x.xx.1.125	2133	377	816	145	571	657	1562	680	2254	1432	822	671	494	731	660	816	M16	460	800	942	200	642	1192	382	916	270	384	800	900

Approximate values

* The dimension B is reduced by 25 mm with counterflange and gasket.

ELECTRONIC OPERATION

			KRBY1025		KRBY1030		KRBY1040	
Model	Gas train	Operation	Code	Price €	Code	Price €	Code	Price €
HEAVY OIL 4000 cSt at 50°C (530°E at 50°C)								
MH. PR.S.xx.A.1.65.EC	DN65	PR	02319285C		02319315C		-	
MH. PR.S.xx.A.1.80.EC	DN80	PR	02319295C		02319325C		02319345C	
MH. PR.S.xx.A.1.100.EC	DN100	PR	02319305C		02319335C		02319355C	
MH. PR.S.xx.A.1.125.EC	DN125	PR	-		-		02319365C	
MH.MD.S.xx.A.1.65.EC	DN65	MD(*)	02319285G		02319315G		-	
MH.MD.S.xx.A.1.80.EC	DN80	MD(*)	02319295G		02319325G		02319345G	
MH.MD.S.xx.A.1.100.EC	DN100	MD(*)	02319305G		02319335G		02319355G	
MH.MD.S.xx.A.1.125.EC	DN125	MD(*)	-		-		02319365G	
MH.MD.S.xx.A.1.65.ES	DN65	MD(*)	02319285S		02319315S		-	
MH.MD.S.xx.A.1.80.ES	DN80	MD(*)	02319295S		02319325S		02319345S	
MH.MD.S.xx.A.1.100.ES	DN100	MD(*)	02319305S		02319335S		02319355S	
MH.MD.S.xx.A.1.125.ES	DN125	MD(*)	-		-		02319365S	

(*) In order for the supply to be completed, the burner must be equipped with the respective modulating probe (see accessory table, page 290).

In compliance with:
- GAR Directive 2016/426/EU
- Low Tension Directive 2014/35/UE
- Electromagnetic Compatibility Directive 2014/30/UE
- Machinery Directive 2006/42/CE

KRBY1025 KRBY1030 KRBY1040

GAS/HEAVY OIL

PNEUMATIC ATOMIZATION WITH ELECTRONIC OPERATION

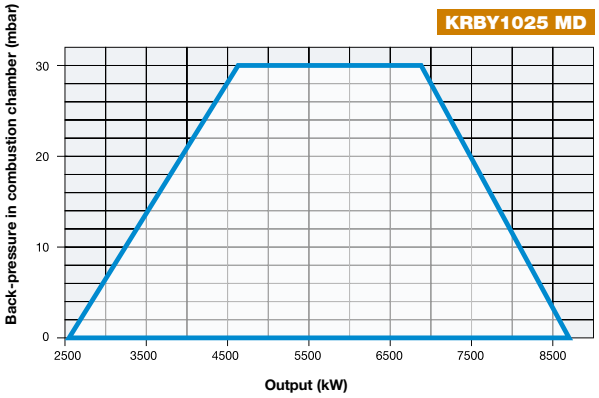

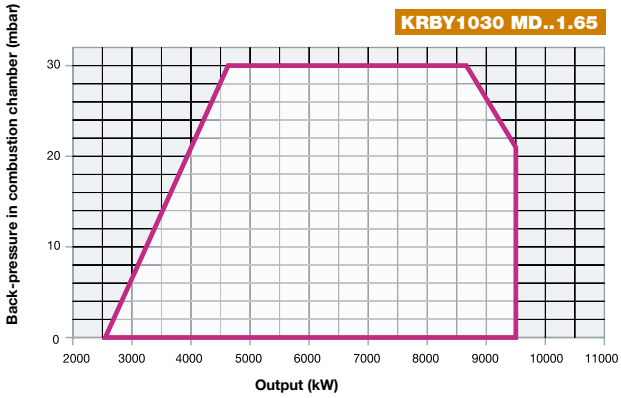

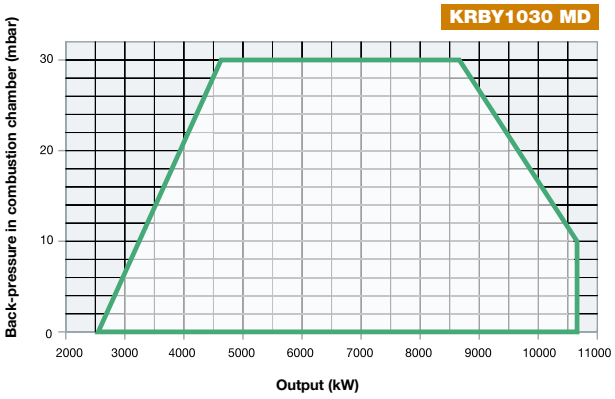

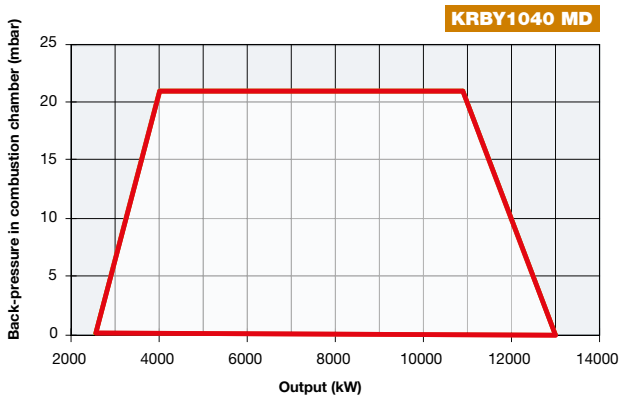

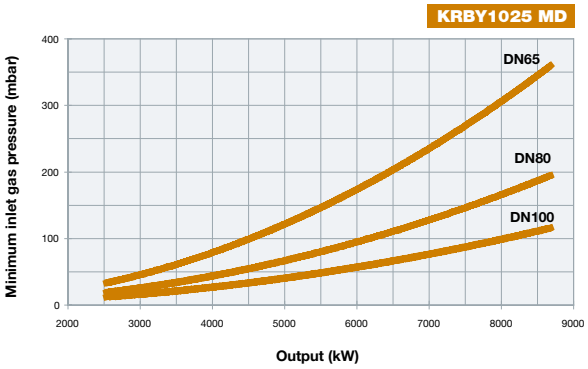

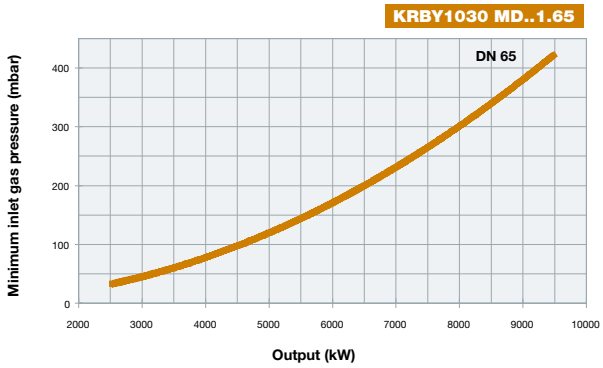

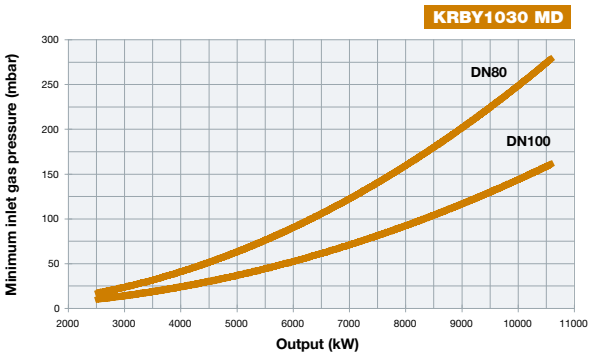

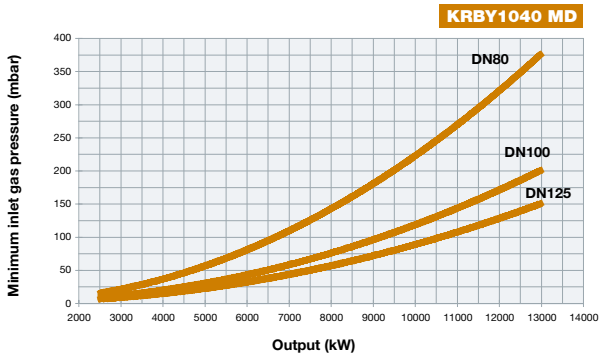

Attention: the graph shows the value of the gas output (kW) against the corresponding pressure without the combustion chamber back pressure. To know the minimum gas pressure at gas train, in order to get the gas output, it is necessary to add the boiler back pressure to the value read on the curve.

KRBY2050 KRBY2060 KRBY2080 duemila SERIES

PNEUMATIC ATOMIZATION WITH ELECTRONIC OPERATION

This particular GAS/HEAVY OIL burners series has been developed in order to use compressed air or, alternatively, steam as a fluid to atomize the fuel, with the aim to accomplish a better combustion result compared to the one gained using the traditional atomizing systems.
These burners are provided with a low pressure nozzle which allows consumption levels to be kept low and which also limits the general wear of the whole atomization system.
All burners are progressive and are completed with an electrical control cabinet and with a pump oil to be installed by the final user. Furthermore, the nozzle performs an automatic cleaning process at the end of each cycle.
The plant must be provided with compressed air or steam at 8 bar.
Burners are ignited through a pilot which can work either with natural gas or LPG and are suitable to be used with fuels with a viscosity up to 4.000 cSt at 50°C (530°E at 50°).
The standard version of burners is set up to atomize with compressed air only, when steam is requested for the atomization, the burner will be modified though a specific kit.
However, compressed air must be always present at the burner in the following cases:
- cold start ups when no steam is available
- valve opening for automatic nozzle cleaning.

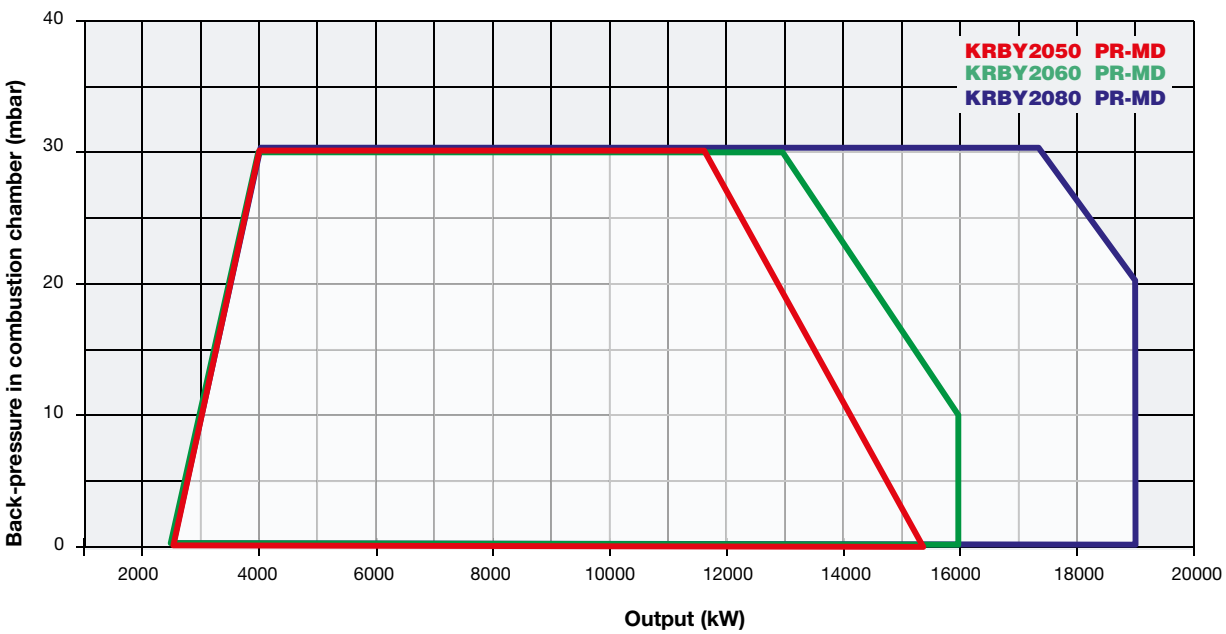

KRBY2050 KRBY2060 KRBY2080

GAS/HEAVY OIL

PNEUMATIC ATOMIZATION WITH ELECTRONIC OPERATION

TECHNICAL DETAILS

Type	Model	Power kW		Auxiliary electrical power supply	Motor electrical power supply	Fan motor	Pump motor	Resistor	Gas connections	Noise level
		min.	max.			kW	kW	kW		dBA
KRBY2050	MH.xx.S.xx.A.1.xxx.xx	2.500	15.200	230 V 1N AC 50 Hz	400 V 3 AC 50 Hz	37	5,5	24 + 24	DN80 - DN100 - DN125	92,5
KRBY2060	MH.xx.S.xx.A.1.xxx.xx	2.500	16.000	230 V 1N AC 50 Hz	400 V 3 AC 50 Hz	45	5,5	24 + 24	DN80 - DN100 - DN125	91,7
KRBY2080	MH.xx.S.xx.A.1.xxx.xx	2.500	19.000	230 V 1N AC 50 Hz	400 V 3 AC 50 Hz	55	5,5	24 + 24	DN100 - DN125	91,7

For the configuration of the gas train, see pages 116-117.

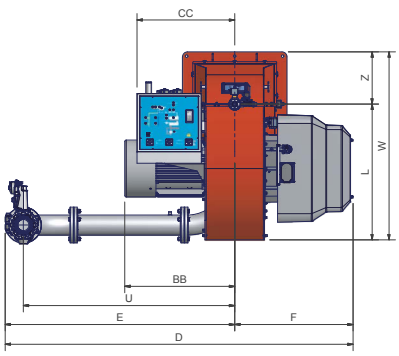

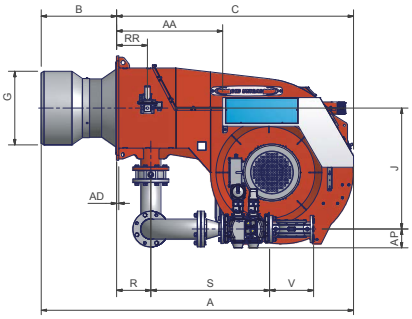

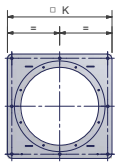

Burner flange

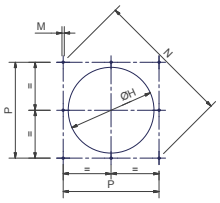

Suggested boiler drilling

The oil pump set (pump, motor, oil tank and filter) is included, but supplied loose (not assembled on the burner).

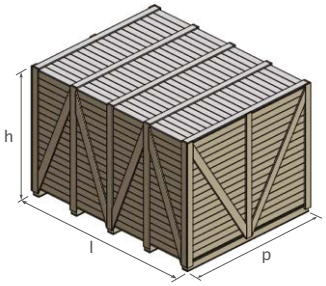

Type	Packaging dimensions (mm)			
	l	p	h	kg
KRBY2050	2.396	1.886	1.969	1.430
KRBY2060	2.396	1.886	1.969	1.510
KRBY2080	2.396	1.886	1.969	1.610

Approximate values

Type	Model	Overall dimensions (mm)																										
		AA	AC	AD	AE	AP	B	BB	C	CC	D	E	F	G	H	J	K	L	M	N	P	R	RR	S	U	V	W	Z
KRBY2050	MH.xx.S.xx.A.1.80.xx	741	866	15	595	132	*	768	1898	735	2431	1604	827	*	*	845	730	949	M16	948	670	239	215	827	1477	310	1314	365
KRBY2050	MH.xx.S.xx.A.1.100.xx	741	866	15	595	145	*	768	1898	735	2447	1620	827	*	*	845	730	949	M16	948	670	239	215	874	1477	350	1314	365
KRBY2050	MH.xx.S.xx.A.1.125.xx	741	866	15	595	175	*	768	1898	735	2465	1638	827	*	*	845	730	949	M16	948	670	239	215	755	1477	480	1314	365
KRBY2060	MH.xx.S.xx.A.1.80.xx	741	866	15	645	132	*	807	1890	735	2309	1463	846	*	*	775	850	949	M16	1117	790	239	215	827	1336	310	1374	425
KRBY2060	MH.xx.S.xx.A.1.100.xx	741	866	15	645	145	*	807	1890	735	2325	1479	846	*	*	775	850	949	M16	1117	790	239	215	874	1336	350	1374	425
KRBY2060	MH.xx.S.xx.A.1.125.xx	741	866	15	645	175	*	807	1890	735	2343	1497	846	*	*	775	850	949	M16	1117	790	239	215	755	1336	480	1374	425
KRBY2080	MH.xx.S.xx.A.1.100.xx	741	866	15	645	145	*	885	1890	735	2325	1479	846	*	*	775	850	949	M16	1117	790	239	215	874	1336	350	1374	425
KRBY2080	MH.xx.S.xx.A.1.125.xx	741	866	15	645	175	*	885	1890	735	2343	1497	846	*	*	775	850	949	M16	1117	790	239	215	755	1336	480	1374	425

* The B, G, H dimensions must be confirmed from our technical DPT.
Approximate values

KRBY2050 KRBY2060 KRBY2080 duemila SERIES

Monoblock burners 2000 series are supplied complete with a steel supporting frame: burner installation and manutention are greatly simplified.
The frame is equipped with wheels to easily move the burner, and its height is adjustable to match any type of boiler or furnace.

SUPPORTING FRAME FOR BURNERS 2050 SERIES

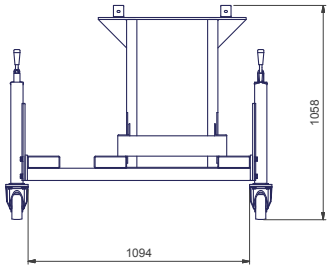

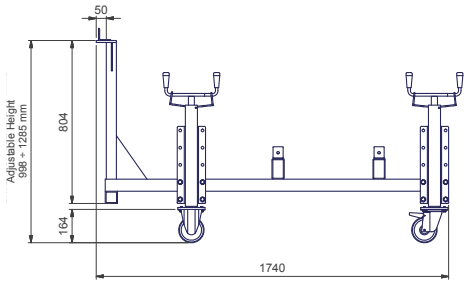

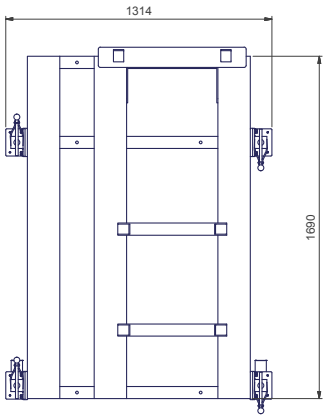

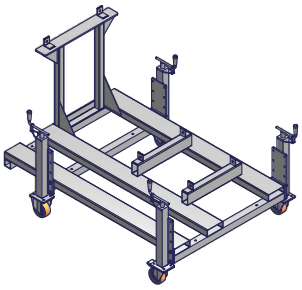

SUPPORTING FRAME FOR BURNERS 2060/2080 SERIES

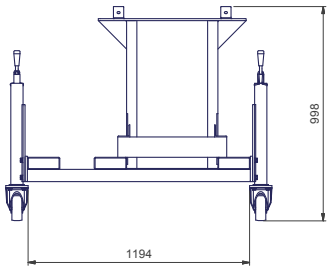

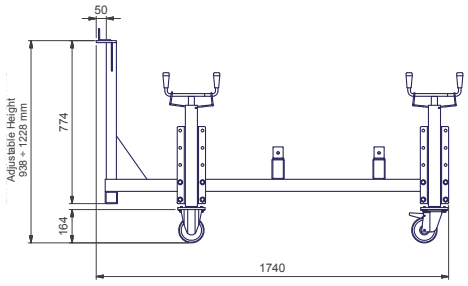

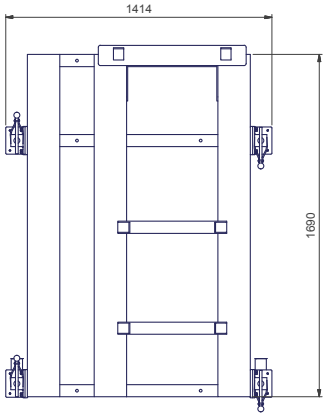

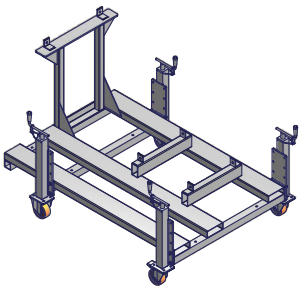

ELECTRONIC OPERATION

Model	Gas train	Operation	KRBY2050 Code	KRBY2050 Price €	KRBY2060 Code	KRBY2060 Price €	KRBY2080 Code	KRBY2080 Price €
HEAVY OIL 50 cSt at 50°C (7°E at 50°C)								
MH-.PR.S.xx.A.1.80.EC	DN80	PR	03219105C		-		-	
MH-.PR.S.xx.A.1.100.EC	DN100	PR	03219115C		-		-	
MH-.PR.S.xx.A.1.125.EC	DN125	PR	03219125C		-		-	
MH-.MD.S.xx.A.1.80.EC	DN80	MD(*)	03219105G		-		-	
MH-.MD.S.xx.A.1.100.EC	DN100	MD(*)	03219115G		-		-	
MH-.MD.S.xx.A.1.125.EC	DN125	MD(*)	03219125G		-		-	
MH-.MD.S.xx.A.1.80.ES	DN80	MD(*)	03219105S		03219135S		-	
MH-.MD.S.xx.A.1.100.ES	DN100	MD(*)	03219115S		03219145S		03219175S	
MH-.MD.S.xx.A.1.125.ES	DN125	MD(*)	03219125S		03219155S		03219185S	

(*) In order for the supply to be completed, the burner must be equipped with the respective modulating probe (see accessory table, page 290).

In compliance with:
- GAR Directive 2016/426/EU
- Low Tension Directive 2014/35/UE
- Electromagnetic Compatibility Directive 2014/30/UE
- Machinery Directive 2006/42/CE

KRBY2050 KRBY2060 KRBY2080 duemila SERIES

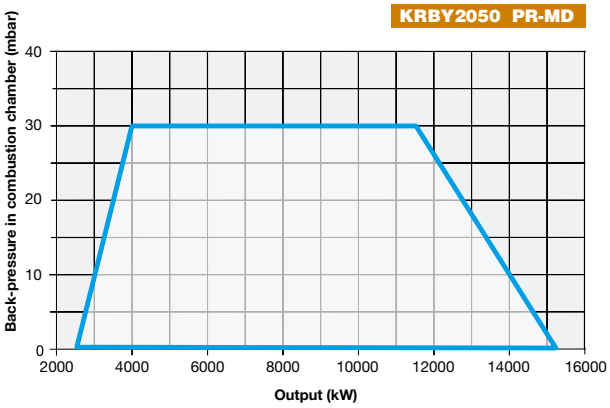

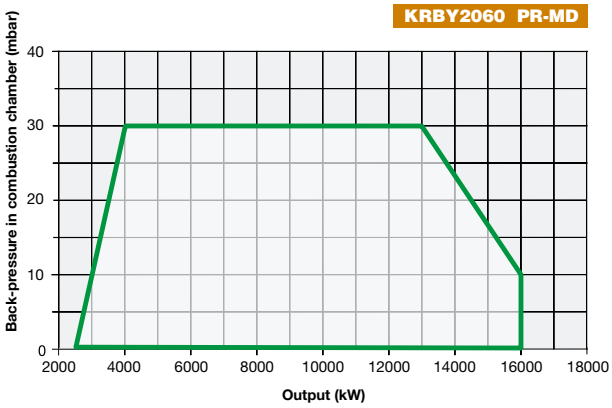

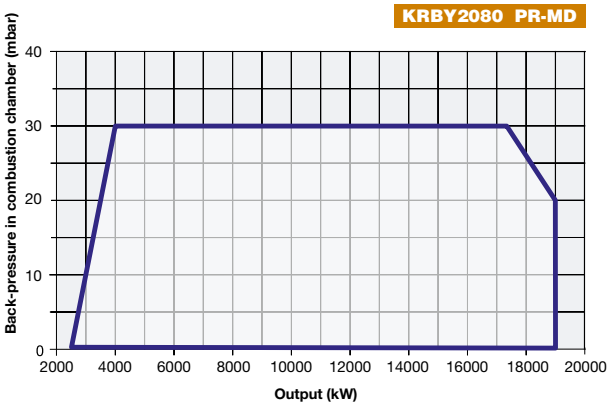

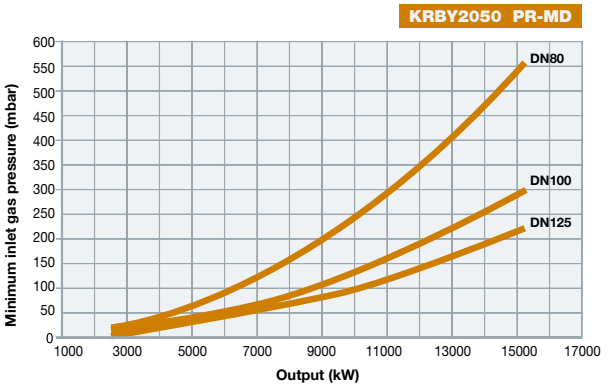

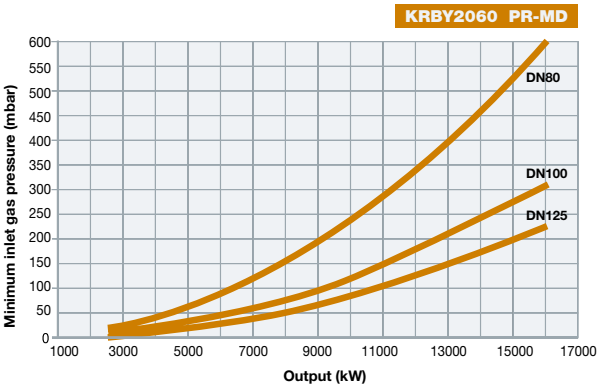

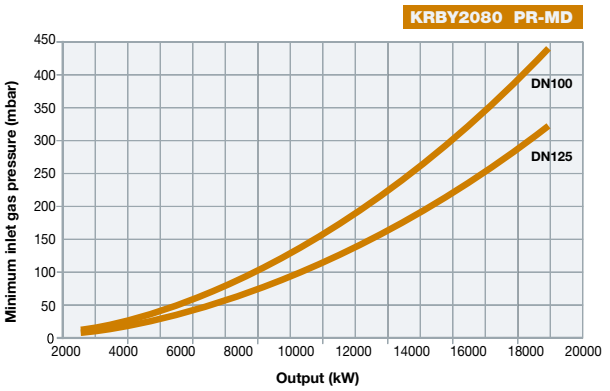

Attention: the graph shows the value of the gas output (kW) against the corresponding pressure without the combustion chamber back pressure. To know the minimum gas pressure at gas train, in order to get the gas output, it is necessary to add the boiler back pressure to the value read on the curve.

INDUSTRIAL BURNERS

tecnopress serie

TP gas
TLX gas low NOx
HTP dual fuel gas/light oil
HTLX dual fuel gas/light oil low NOx

novanta, cinquecento, mille, duemila, tremila series

TP gas
TLX gas low NOx
TG light oil
TN heavy oil
TPBY heavy oil
HTP dual fuel gas/light oil
HTLX dual fuel gas/light oil low NOx
KTP dual fuel gas/heavy oil
KTBY dual fuel gas/heavy oil

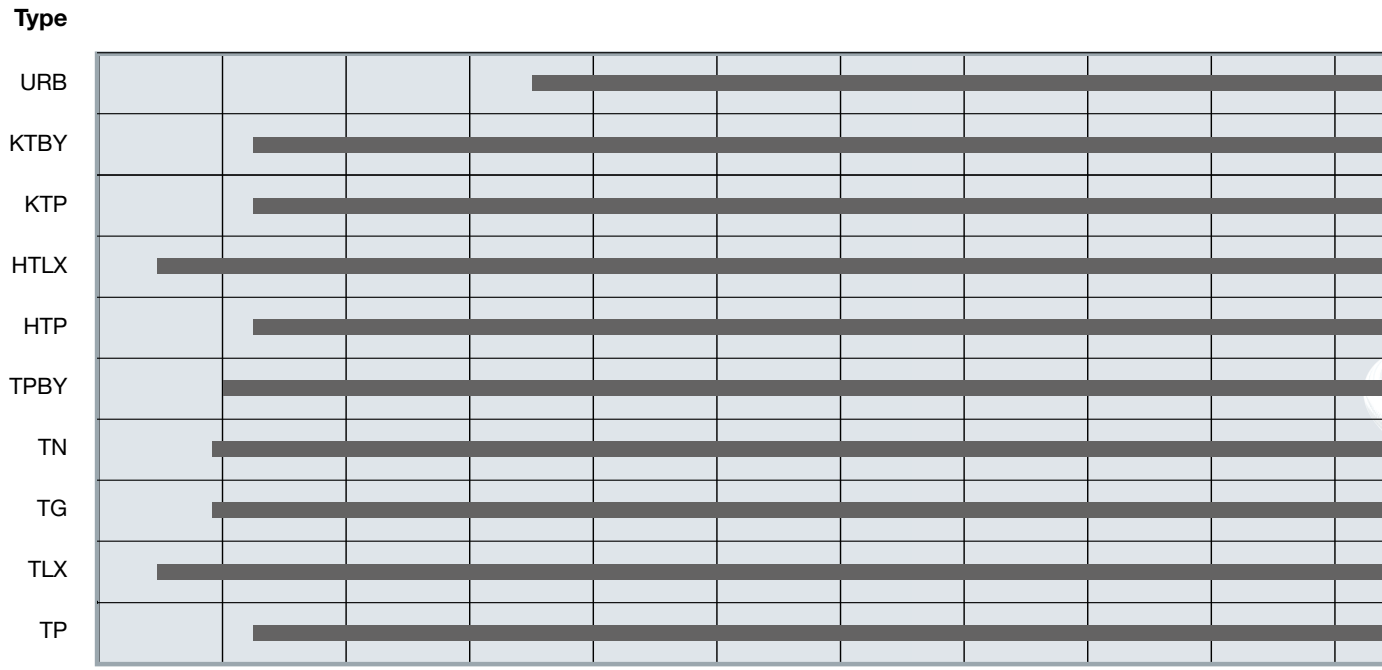

URB series

URB multifuel

											(from 7.000 to 80.000 kW)
		(from 2.300 to 33.500 kW)									
		(from 2.300 to 33.500 kW)									
		(from 1.480 to 33.500 kW)									
		(from 2.300 to 33.500 kW)									
		(from 2.000 to 33.500 kW)									
		(from 1.900 to 33.500 kW)									
		(from 1.900 to 33.500 kW)									
		(from 1.480 to 33.500 kW)									
		(from 2.300 to 33.500 kW)									

tecnopress novanta cinquecento mille duemila tremila URB SERIES

BURNERS FOR INDUSTRIAL APPLICATIONS WITH SEPARATE FAN

These industrial burners have been designed for all those applications in which singleblock models are poorly suited or entirely inadequate, such as wherever the power values at the firing would otherwise require the use of built-in fans of excessive size, whenever combustion air pre-heating is provided, or again, whenever the primary noise source must be shifted to soundproofed areas.

The range runs from 264 kW to 80 MW power in different constructive versions as required by the type of final system or specific client needs. Aluminium casting is usually used for the lower power models (up to 19 MW), while steel construction is adopted for higher power models. This industrial burner design project was developed to obtain the greatest versatility in order to achieve the objectives posed by the client, and therefore in respect of the widest range of technical specifications. For example, combustion heads with air inlet from above or below the firing, axial or tangential air flow, or registers for turbulence adjustment and other features can be provided. This means that the
machines can be personalised as required by size and performance in different industrial sectors that
offer differ widely one from another.
All the combustion heads are obviously available in the versions for liquid, gaseous or mixed fuels.

Personalisation in these cases is almost inevitable and entirely feasible with our range, and all such requests are carefully analysed, one by one. Each system can be further distinguished by the equipment provided:
- built-in or separately-mounted (wall or console) control panels
- electronic or mechanical adjustment
- oxygen flow control
- flue gas re-circulation
- combustion air heated up to 200°C
- combustion oil thrust unit
- combustion oil heating unit

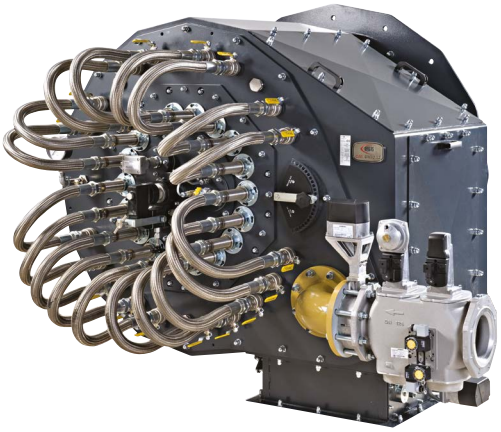

TLX1050

TLX2000

URBSH30

TECHNICAL DETAILS

TP gas			
Type	Min. modulation output kW	Min. application output kW	Max output kW
TP120A	300	840	1.200
TP165A	320	1.154	1.650
TP205A	340	1.433	2.050
TP90A	320	1.610	2.300
TP91A	480	1.869	2.670
TP92A	480	2.135	3.050
TP93A	550	2.870	4.100
TP512A	600	3.150	4.500
TP515A	770	3.640	5.200
TP520A	1.000	4.480	6.400
TP525A	2.000	6.825	9.750
TP1030	2.500	9.310	13.300
TP1050	3.500	10.850	15.500
TP1080	3.500	13.300	19.000
TP2000	3.600	15.400	22.000
TP2500	4.500	18.400	27.000
TP3000	5.500	27.300	39.000

TP1030

TP2000

TLX gas low NOx			
Type	Min. modulation output kW	Min. application output kW	Max output kW
TLX83	200	580	830
TLX115	300	805	1.150
TLX140	290	980	1.400
TLX190	360	1.330	1.900
TLX92R	350	1.869	2.670
TLX92.1	360	2.317	3.310
TLX512R	460	2.440	3.500
TLX512.1	700	3.147	4.500
TLX515.1	580	4.126	5.900
TLX520.1	650	4.760	6.800
TLX525.1	860	5.525	7.900
TLX1025.1	1.565	6.014	8.600
TLX1030R	1.090	6.475	9.250
TLX1030.1	1.550	7.482	10.700
TLX2020	2.000	11.200	16.000
TLX2030	2.400	16.083	23.000
TLX2040	3.900	22.050	31.500
TLX3050	4.900	27.300	39.000

TLX1030R

TLX2040

For NO_x emissions < 30 - 50 mg/kWh consult our sales offices.

TECHNICAL DETAILS

TG light oil			
Type	Min. modulation output kW	Min. application output kW	Max output kW
TG90	264	1.330	1.900
TG91	698	1.465	2.093
TG92	849	1.791	2.558
TG510	1.314	2.767	3.953
TG515	1.628	3.419	4.884
TG520	2.326	4.884	6.977
TG525	2.000	6.825	9.750
TG1030	2.500	9.310	13.300
TG1050	3.500	10.850	15.500
TG1080	3.500	13.300	19.000
TG2000	3.600	15.400	22.000
TG2500	4.500	18.400	27.000
TG3000	5.500	27.300	39.000

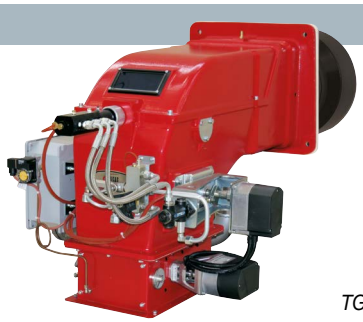

TG1080

TG3000

TN heavy oil viscosity up to 400 cSt at 50°C (50°E at 50°C)			
Type	Min. modulation output kW	Min. application output kW	Max output kW
TN90	264	1.330	1.900
TN91	698	1.465	2.093
TN92	849	1.791	2.558
TN510	1.314	2.767	3.953
TN515	1.628	3.419	4.884
TN520	2.326	4.884	6.977
TN525	2.000	6.825	9.750
TN1030	2.500	9.310	13.300
TN1050	3.500	10.850	15.500
TN1080	3.500	13.300	19.000
TN2000	3.600	15.400	22.000
TN2500	4.500	18.400	27.000
TN3000	5.500	27.300	39.000

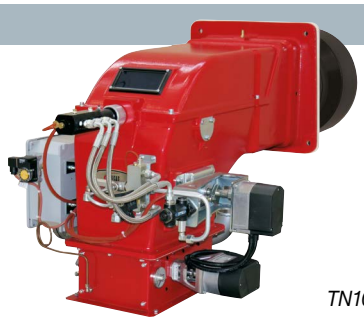

TN1050

TN2500

TECHNICAL DETAILS

TPBY heavy oil pneumatic atomization with viscosity up to 4000 cSt at 50°C (503°E at 50°C)			
Type	Min. modulation output kW	Min. application output kW	Max output kW
TPBY90	670	1.400	2.000
TPBY91	500	1.750	2.500
TPBY92	700	2.100	3.000
TPBY510	1.100	3.500	5.000
TPBY515	1.200	4.200	6.000
TPBY520	1.400	4.900	7.000
TPBY525	2.000	6.825	9.750
TPBY1030	2.550	9.310	13.300
TPBY1050	3.100	10.850	15.500
TPBY1080	3.800	13.300	19.000
TPBY2000	3.600	15.400	22.000
TPBY2500	4.500	18.400	27.000
TPBY3000	5.500	27.300	39.000

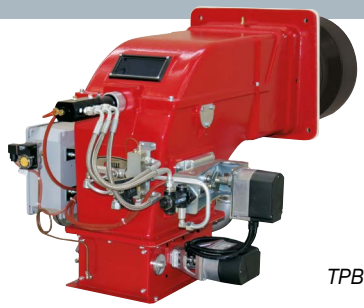

TPBY525

TPBY3000

HTP dual fuel gas/light oil			
Type	Min. modulation output kW	Min. application output kW	Max output kW
HTP120A	300	840	1.200
HTP165A	320	1.154	1.650
HTP205A	340	1.433	2.050
HTP90A	320	1.610	2.300
HTP91A	480	1.869	2.670
HTP92A	480	2.135	3.050
HTP93A	550	2.870	4.100
HTP512A	600	3.150	4.500
HTP515A	770	3.640	5.200
HTP520A	1.000	4.480	6.400
HTP525A	2.000	6.825	9.750
HTP1030	2.500	9.310	13.300
HTP1050	3.500	10.850	15.500
HTP1080	3.500	13.300	19.000
HTP2000	3.600	15.400	22.000
HTP2500	4.500	18.400	27.000
HTP3000	5.500	27.300	39.000

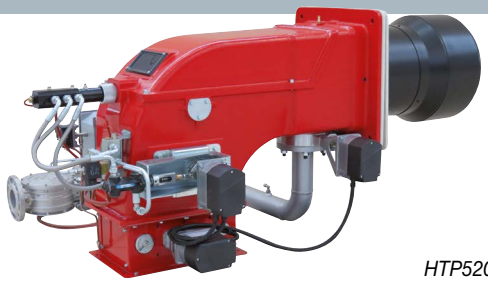

HTP520

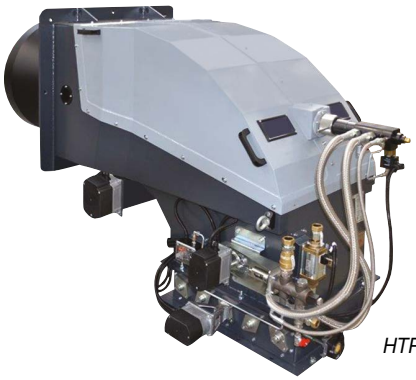

HTP3000

TECHNICAL DETAILS

HTLX dual fuel gas/light oil **low NOx**

Type	Min. modulation output kW	Min. application output kW	Max output kW
HTLX83	200	580	830
HTLX115	300	805	1.150
HTLX140	290	980	1.400
HTLX190	360	1.330	1.900
HTLX92R	350	1.869	2.670
HTLX92.1	360	2.317	3.310
HTLX512R	460	2.440	3.500
HTLX512.1	700	3.147	4.500
HTLX515.1	580	4.126	5.900
HTLX520.1	650	4.760	6.800
HTLX525.1	860	5.525	7.900
HTLX1025.1	1.565	6.014	8.600
HTLX1030R	1.090	6.475	9.250
HTLX1030.1	1.550	7.482	10.700
HTLX2020	2.000	11.200	16.000
HTLX2030	2.400	16.083	23.000
HTLX2040	3.900	22.050	31.500
HTLX3050	4.900	27.300	39.000

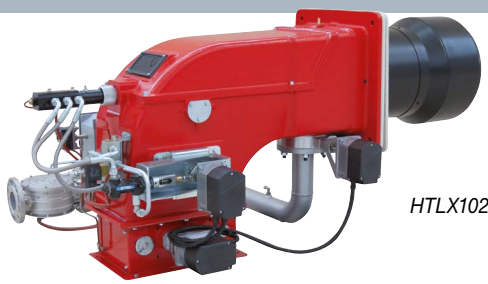

HTLX1025.1

HTLX3050

For NO_x emissions < 30 - 50 mg/kWh consult our sales offices.

KTP dual fuel gas/heavy oil with viscosity up to 400 cSt at 50°C (50°E at 50°C)

Type	Min. modulation output kW	Min. application output kW	Max output kW
KTP90	320	1.610	2.300
KTP91	480	1.869	2.670
KTP92	480	2.135	3.050
KTP93	550	2.870	4.100
KTP512	600	3.150	4.500
KTP515	770	3.640	5.200
KTP520	1.000	4.480	6.400
KTP525	2.000	6.825	9.750
KTP1030	2.500	9.310	13.300
KTP1050	3.500	10.850	15.500
KTP1080	3.500	13.300	19.000
KTP2000	3.600	15.400	22.000
KTP2500	4.500	18.400	27.000
KTP3000	5.500	27.300	39.000

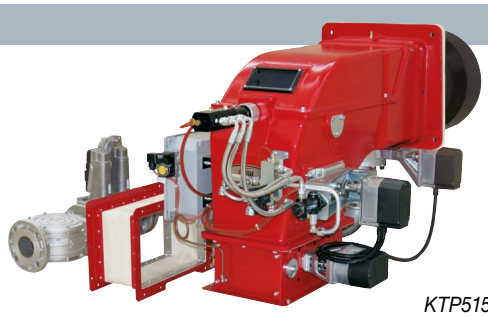

KTP515

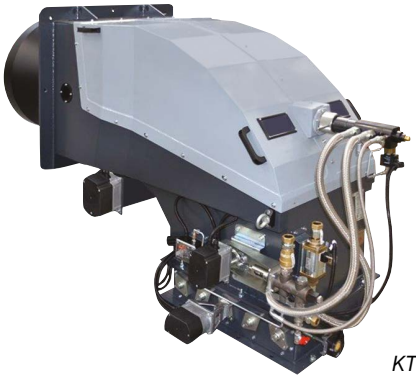

KTP2000

TECHNICAL DETAILS

KTBY dual fuel gas/heavy oil with viscosity up to 4000 cSt at 50°C (530°E at 50°C)

Type	Min. modulation output kW	Min. application output kW	Max output kW
KTPBY90	320	1.610	2.300
KTPBY91	480	1.869	2.670
KTPBY92	480	2.135	3.050
KTPBY93	550	2.870	4.100
KTPBY512	600	3.150	4.500
KTPBY515	770	3.640	5.200
KTPBY520	1.000	4.480	6.400
KTPBY525	2.000	6.825	9.750
KTPBY1030	2.500	9.310	13.300
KTPBY1050	3.500	10.850	15.500
KTPBY1080	3.500	13.300	19.000
KTPBY2000	3.600	15.400	22.000
KTPBY2500	4.500	18.400	27.000
KTPBY3000	5.500	27.300	39.000

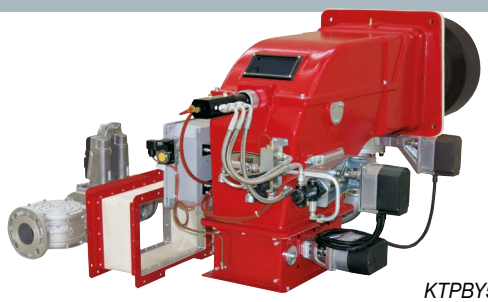

KTPBY525

KTPBY3000

TECHNICAL DETAILS

URB multifuel			
Type	Min. modulation output kW	Min. application output kW	Max output kW
URB5	1.167	4.900	7.000
URB10	1.700	7.000	10.200
URB15	2.567	10.200	15.400
URB20	2.983	15.400	17.900
URB25	3.783	17.900	22.700
URB30	5.050	22.700	30.300
URB32	5.533	30.300	33.200
URB35	5.967	33.200	35.800
URB40	6.917	35.800	41.500
URB45	7.750	41.500	46.500
URB50	8.500	46.500	51.000
URB60	10.067	51.000	60.400
URB70	11.167	60.400	67.000
URB80	13.300	67.000	80.000

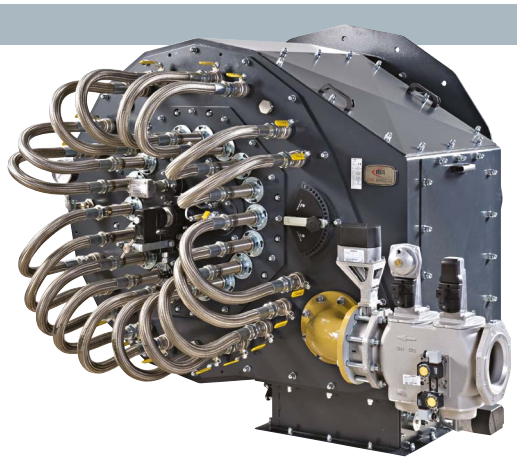

For NO_x emissions < 80 - 50 - 30 mg/kWh consult our sales offices.

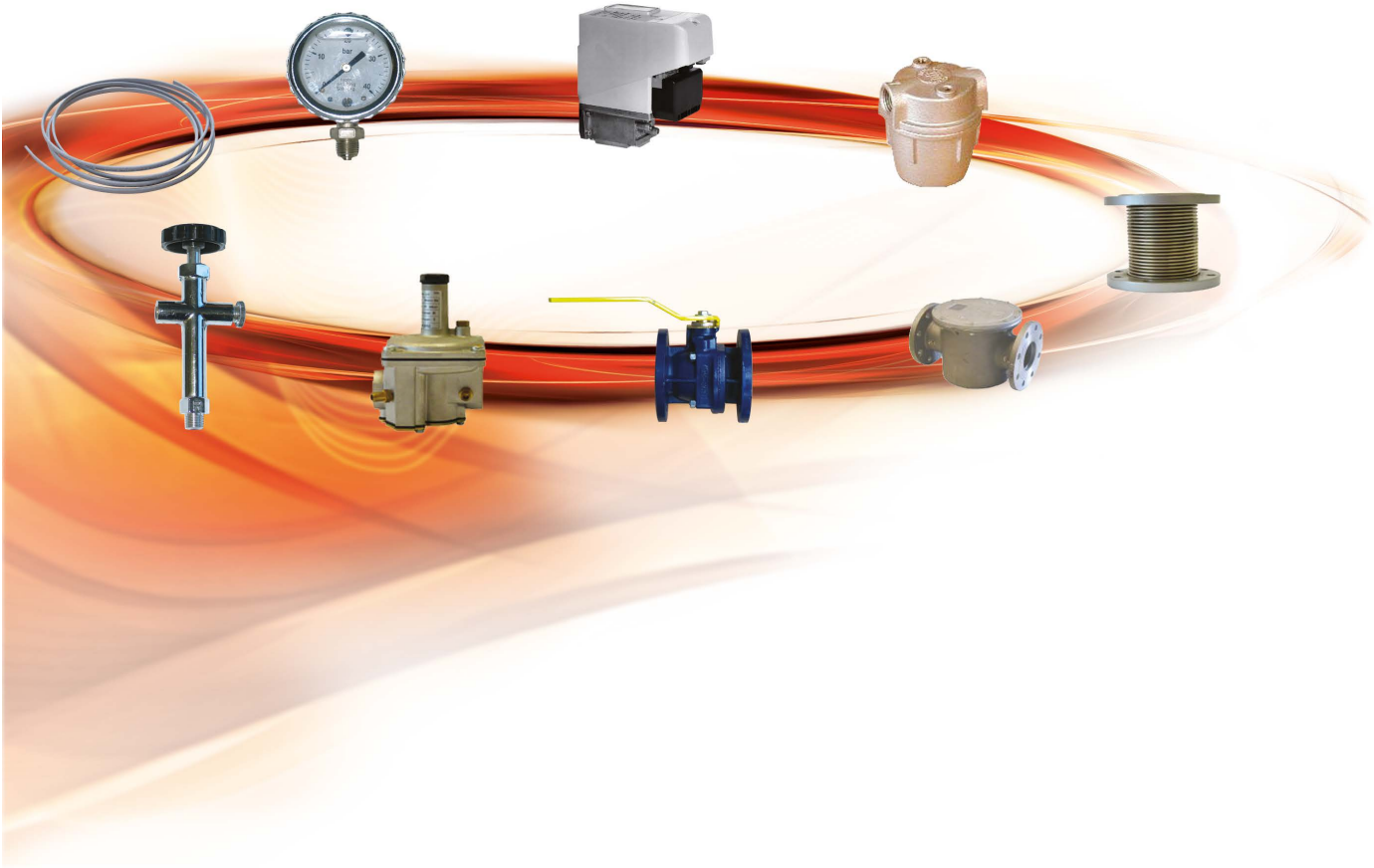

PROBES FOR MODULATORS

Variable to be checked	Temperature/Pressure scale	Code	Price €
Temperature*	-15 ÷ 50 °C	2.56.01.35	
Temperature	30 ÷ 130 °C	2.56.01.C3	
Temperature	0 ÷ 400 °C	2.56.01.45	
Temperature	0 ÷ 1200 °C	2.56.01.42	
Pressure	3 bar	2.56.01.C4	
Pressure	10 bar	2.56.01.C5	
Pressure	16 bar	2.56.01.C6	
Pressure	25 bar	2.56.01.C7	
Pressure	40 bar	2.56.01.C8	

* Hot air probe

Special components

ACOUSTIC HOODS BOX Aseembled on wheeled frame (made in sheet steel, oven painted and coated with soundproofing material)

Description	Price €
Novanta series	
Cinquecento series	
Mille series	

KIT for automatic fuel switch

Model	Code	Price €
MIXMATIC	-	

SPACERS

Height mm	Burner type	Code	Price €
100	90 SERIES	3.07.03.28	
150	90 SERIES	3.07.03.29	
200	90 SERIES	3.07.03.30	
250	90 SERIES	3.07.03.31	
100	500 SERIES (H-K)	3.07.03.34	
150	500 SERIES (H-K)	3.07.03.36	
180	500 SERIES (H-K)	3.07.03.37	
200	500 SERIES (H-K)	3.07.03.38	
250	500 SERIES (H-K)	3.07.03.39	
300	500 SERIES (H-K)	3.07.03.41	
100	1000 SERIES (N)	3.07.03.49	
150	1000 SERIES (N)	3.07.03.44	
200	1000 SERIES (N)	3.07.03.46	
250	1000 SERIES (N)	3.07.03.45	
300	1000 SERIES (N)	3.07.03.45	

INVERTER FOR ELECTRONIC CAM BURNERS

INVERTER FOR ELECTRONIC CAM BURNERS	
Variants:	Packaging included
	Inverter supplied loose
	IP20 version to be fitted inside the electrical panel c/w remote keyboard
	Complete version c/w electrical panel upon request
	IP54 version to be placed by the burner

Inverter power kW	Burner Type	IP 20 version Price €	IP 54 version Price €	IP 55 version Price €
4,0	91			
5,5	92			
7,5	93/510/RX92R/RX92.1			
9,2	512			
11	515			
15	520			
18,5	525			

Engine power kW	Inverter power kW	Braking resistor	Burner Type	IP 20 version Price €	IP 54 version Price €	IP 55 version Price €
3.0	3.0	IP54	G290A/G215X/G250X			
4,0	4,0	IP54	G310A/G300X			
7,5	7,5	IP54	H365X/H455X			
9,2	11	IP54	H440X/H500X/H630X/H685A			
15	15	IP54	K590X/K750X/K750A/ K880A/K990A			
18,5	18	IP54	1025/N880X			
22	22	IP54	1030/N925X/N1060A			
30	30	IP54	1040/N1060X/N1300A			
37	37	IP54	2050R/2050			
45	45	IP54	2060			
55	55	IP54	2080			

Included braking resistor loose form IP54 (IP65 version on request).
On IP20 models on request Keypad mounting kit on the control panel.

OPTIONS GAS BURNERS

MANUAL CUT OFF VALVES, FLANGED (ball valve)

Gas connections	Model	Code	Price €
DN65	V65	2.81.00.12	
DN80	V80	2.81.00.13	
DN100	V100	2.81.00.14	
DN125	V125	2.81.00.71	

ANTI VIBRATING JOINT (flanged)

Gas connections	Model	Code	Price €
DN65	GA65	2.34.00.81	
DN80	GA80	2.34.00.82	
DN100	GA100	2.34.00.83	
DN125	GA125	2.34.00.70	

GAS FILTERS (flanged: max inlet pressure 2 bar)

Gas connections	Model	Code	Price €
DN65	F65	2.09.01.17	
DN80	F80	2.09.01.18	
DN100	F100	2.09.01.20	
DN125	F125	2.09.01.28	

PRESSURE GOVERNORS WITH GAS FILTERS (flanged: Pe max 1bar)

Gas connections	Model	Code	Price €
DN65	S.P.65	2.80.00.69	
DN80	S.P.80	2.80.00.71	
DN100	S.P.100	2.80.00.74	

MAXIMUM PRESSURE

Description	Code	Price €
GAS MAXIMUM PRESSURE SWITCH KIT	2.19.12.41	

SUPPORT FOR PRESSURE GAUGE

Model	Code	Price €
Push botton valve	2810010	

MANOMETER

Model	Code	Price €
Glycerine gauge 0 ÷ 60 mbar	2520001	
Glycerine gauge 0 ÷ 400 mbar	2520028	
Glycerine gauge 0 ÷ 1 bar	2520030	

GAS PRESSURE REDUCING STATIONS

Gas pressure reducing stations (available for inlet pressures up to 6 bar and max flow rate corresponding to an output of 20.000 kW).

Type	Power (kW)	Capacity (Nm³/h)	Burners*	Max pressure (bar)	Price €
GRG30	3000	320	R92A	6	
GRG130	13000	1370	R1040A	6	
GRG200	20000	2100	2 x R1025A	6	

Gas pressure reducing station according to the below scheme
The station includes all the components as shown in the picture (see scheme and legend)
The station is pre-assembled on a frame
Packaging included
The stations are ready to work with natural gas, matching and sizes can vary according to the pressure and type of gas.
Max inlet pressure over 6 bar: price upon request
*The burner in an example of a typical installation, however the same station can supply different burners of smaller size.

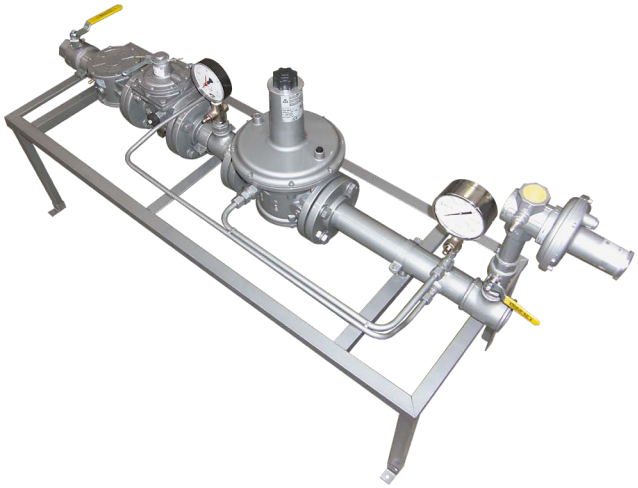

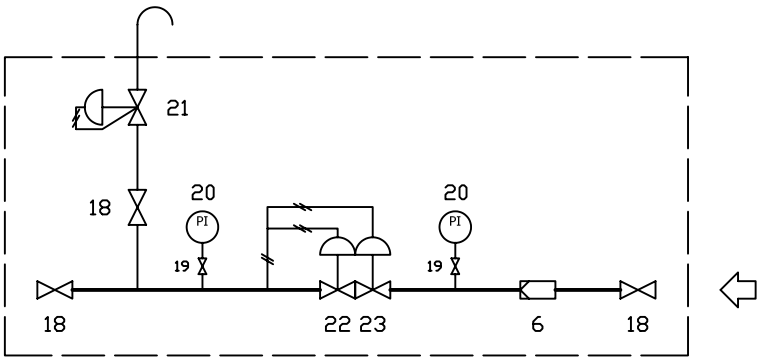

KEY

6	Gas filter	21	Relief valve
18	Manual cut off (ball valve)	22	Reducer
19	Manual cut off for manometer	23	Safety block valve
20	Manometer		

OPTIONS LIGHT OIL BURNERS

VACUUM GAUGE

Model	Code	Price €
Glycerine vacuum gauge -1 ÷ 0 bar (¼” connection)	2520008	

FILTERS

Model	Code	Price €
Filter 1” 0,1 big	2090018	
Filter 1” 0,3 big	2090207	

MANOMETER

Model	Code	Price €
Glycerine gauge 0 ÷ 40 bar (¼” connection)	2520003	
Glycerine gauge 0 ÷ 6 bar (¼” connection)	2520006	
Glycerine gauge 0 ÷ 10 bar (¼” connection)	2520015	
Glycerine gauge 0 ÷ 16 bar (¼” connection)	2520014	
Glycerine gauge 0 ÷ 25 bar (¼” connection)	2520027	

SUPPORT FOR PRESSURE GAUGE manometer/vacuum gauge

Model	Gas connections	Code	Price €
Isolating valve (¼” connection)	¼”	2520005	

AIR COMPRESSORS

The tables in this page include useful data to match the correct compressor in case compressed air is needed to atomize the liquid fuel (burners PBY/RBY/KPBY/KRBY).

Compressors can be supplied upon request.

Burners with pneumatic atomization are never supplied with compressor.

Air conditions are referred to standard (15°C and 1.013 mbar).

In case steam is preferred to air, the characteristics are exactly the same. Steam must be saturated and dry. In any case the max pressure of the steam must not be over 12 bar (190°C).

Type	Power (kW)	Air capacity (kg/h)	Air capacity (l/second)	Air pressure (bar)	Price €
PBY90	2000	21,5	4,8	6÷8	
PBY91	2500	26,9	6,0	6÷8	
PBY92	3000	32,3	7,2	6÷8	
PBY93	3700	39,8	8,9	6÷8	
RBY510	5000	53,8	12,0	6÷8	
RBY515	6000	64,5	14,3	6÷8	
RBY520	6500	69,9	15,5	6÷8	
RBY525	7300	78,5	17,5	6÷8	
RBY1025	8700	93,5	20,8	6÷8	
RBY1030	10000	107,5	23,9	6÷8	
RBY1040	13000	139,7	31,1	6÷8	
RBY2050	15200	163,4	36,3	6÷8	
RBY2060	16000	172,0	38,2	6÷8	
RBY2080	19000	204,2	45,4	6÷8	
KPBY91	2670	28,7	6,4	6÷8	
KPBY92	3050	32,8	7,3	6÷8	
KPBY93	4100	44,1	9,8	6÷8	
KRBY512	4500	48,4	10,8	6÷8	
KRBY515	5200	55,9	12,4	6÷8	
KRBY520	6400	68,8	15,3	6÷8	
KRBY525	8000	86,0	19,1	6÷8	
KRBY1025	8700	93,5	20,8	6÷8	
KRBY1030	10600	113,9	25,3	6÷8	
KRBY1040	13000	139,7	31,1	6÷8	
KRBY2050	15200	163,4	36,3	6÷8	
KRBY2060	16000	172,0	38,2	6÷8	
KRBY2080	19000	204,2	45,4	6÷8	

OPTIONS HEAVY OIL BURNERS

HEAVY OIL FILTERS

Model	Code	Price €
Filter 1” 0,3 micron big	2090207	
Filter 1½” 0,3 for PBY	2090236	
Filter 51000/05 F (flanged DN 50)*	2090237	
Magnetic filter DN 50 1”	2090203	
Magnetic filter 1½”	2090245	

* With 300 W heater

VACUUM GAUGE

Model	Code	Price €
Glycerine vacuum gauge -1 ÷ 0 bar (¼” connection)	2520008	

MANOMETER

Model	Code	Price €
Glycerine gauge 0 ÷ 6 bar (¼” connection)	2520035	
Glycerine gauge 0 ÷ 10 bar (¼” connection)	2520036	
Glycerine gauge 0 ÷ 16 bar (¼” connection)	2520033	
Glycerine gauge 0 ÷ 25 bar (¼” connection)	2520034	
Glycerine gauge 0 ÷ 40 bar (¼” connection)	2520019	

SUPPORT FOR PRESSURE GAUGE manometer / vacuum gauge

Model	Code	Price €
Isolating valve (¼” connection)	2520005	

DEGASSING BOTTLE

Model	Diametro	Code	Price €
Threaded	1”½	3040117	
Flanged	DN 40	3040121	

BELT HEATER CABLE FOR PIPES

Model	Type	Code	Price €
Power 64 Watt/meter	each meter		

MANUAL CUT OFF VALVE (BALL VALVE)

Model	Code	Price €
1”	2810024	
1”½	2810025	
2”	2810031	
2”½	-	

OIL PRE-HEATING TANK (STEAM/DIATERMIC OIL)

Type	Capacity kg/h	Tank volume liters	Electrical heaters kW	Max temperature °C	Max pressure bar	Price €
HTS5	500	500	12	80÷100	5	
HTS10	1.000	1.500	18	80÷100	5	
HTS20	2.000	2.000	24	80÷100	5	
HTS30	3.000	3.000	24	80÷100	5	
HTS40	4.000	4.000	24	80÷100	5	

Vertical cylidrical tanks, provided with electrical resistance and spiral heat exchanger.
Upon order please specify if the spiral must be provided for diatermic oil or steam.
Electrical panel mounted aboard.
Packaging included.
The oil flow rate is indicative: it can vary according to the type of fuel and to the thermal step required.

OIL PRE-HEATING TANK (ONLY ELECTRICAL RESISTANCES/HOT WATER)

Type	Capacity kg/h	Tank volume liters	Electrical heaters kW	Max temperature °C	Max pressure bar	Price €
HT2	200	200	8	80÷100	5	
HT5	500	500	12	80÷100	5	
HT10	1.000	1.500	18	80÷100	5	
HT20	2.000	2.000	24	80÷100	5	
HT30	3.000	3.000	24	80÷100	5	
HT40	4.000	4.000	24	80÷100	5	

Vertical cylidrical tanks, provided with electrical resistance and spiral heat exchanger (optional).
Upon order please specify electrical resistances only or hot water coil.
Electrical panel mounted aboard.
Packaging included.
The oil flow rate is indicative: it can vary according to the type of fuel and to the thermal step required.

PRESSURE REGULATORS FOR LIGHT/HEAVY OIL RINGS

LIGHT OIL PRESSURE REGULATOR GROUPS

Type	Capacity kg/h	Diameter	Price €
GRP-G2	350	¾”	
GRP-G4	650	¾”	
GRP-G7	1.000	1”	
GRP-G10	1.600	1”	
GRP-G13	2.000	1”½	
GRP-G20	3.000	1”1/2	

Pressure regulator group supplied pre-assembled (no frame).
Packaging included.
For greater flow rates, quotations upon request.

CRUDE AND HEAVY OIL PRESSURE REGULATOR GROUPS

Type	Capacity kg/h	Diameter	Price €
GRP-D2	500	DN 50	
GRP-D4	800	DN 50	
GRP-D7	1.300	DN 50	
GRP-D10	2.000	DN 50	
GRP-D13	2.500	DN 50	
GRP-D20	4.000	DN 50	

Pressure regulator group supplied pre-assembled (no frame).
Packaging included.
For greater flow rates, quotations upon request.

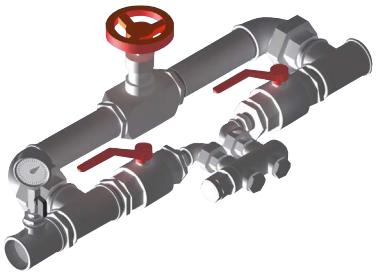

LOW PRESSURE OIL HANDLING UNIT (RING) - LIGHT OIL - 2 PUMPS IN PARALLEL (ONE AS BACK-UP)

Type	Capacity kg/h	Power kW	Diameter	Dimensions a x b x h (mm)	Price €
GS-G2	350	2.300	1”	1.200 x 900 x 500	
GS-G4	650	4.300	1”1/2	1.300 x 900 x 600	
GS-G7	1.000	6.600	1”1/2	1.400 x 1.200 x 600	
GS-G10	1.600	10.600	DN 50	1.500 x 1.200 x 700	
GS-G13	2.000	13.300	DN 50	1.600 x 1.400 x 700	
GS-G20	3.000	20.000	DN 50	1.800 x 1.400 x 800	

LOW PRESSURE OIL HANDLING UNIT (RING) - LIGHT OIL - SINGLE PUMP

Type	Capacity kg/h	Power kW	Diameter	Dimensions a x b x h (mm)	Price €
GS-G2s	350	2.300	1”	1.200 x 600 x 500	
GS-G4s	650	4.300	1”1/2	1.300 x 600 x 600	
GS-G7s	1.000	6.600	1”1/2	1.400 x 800 x 600	
GS-G10s	1.600	10.600	DN 50	1.500 x 800 x 700	

LOW PRESSURE OIL HANDLING UNIT (RING) - HEAVY/RAW OIL - 2 PUMPS IN PARALLEL (ONE AS BACK-UP)

Type	Capacity kg/h	Power kW	Diameter	Dimensions a x b x h (mm)	Price €
GS-D2	500	2.700	DN 50	1.300 x 900 x 800	
GS-D4	800	4.500	DN 50	1.500 x 900 x 800	
GS-D7	1.300	6.900	DN 50	1.600 x 1.200 x 800	
GS-D10	2.000	10.800	DN 50	1.600 x 1.200 x 800	
GS-D13	2.500	13.900	DN 50	1.800 x 1.500 x 800	
GS-D20	4.000	20.000	DN 50	1.800 x 1.500 x 800	

LOW PRESSURE OIL HANDLING UNIT (RING) - HEAVY/RAW OIL - SINGLE PUMP

Type	Capacity kg/h	Power kW	Diameter	Dimensions a x b x h (mm)	Price €
GS-D2s	500	2.700	DN 50	1.300 x 600 x 800	
GS-D4s	800	4.500	DN 50	1.500 x 600 x 800	
GS-D7s	1.300	6.900	DN 50	1.600 x 800 x 800	
GS-D10s	2.000	10.800	DN 50	1.600 x 800 x 800	

The output is referred to the burners which can be supplied by the low pressure ring.
The flow rate is referred to the heavy oil flow rate pumped into the ring.
Dimensions are indicative.
Dimensions do not include the electrical panel, the panel can be installed on the the oil ring, or wall-hung (dimensions 400x250x600h mm).
For greater flow rates quotations upon request.
In order to pick up the correct oil ring to your application, refer to the output and choose the ring one size larger. Couple the ring with the regulation group of the same size. To finish the job remember to choose the the degassing tanks (the use of degassing tanks is mandatory when 2 or more burners are supplied by the same ring, only recomended in all other cases).

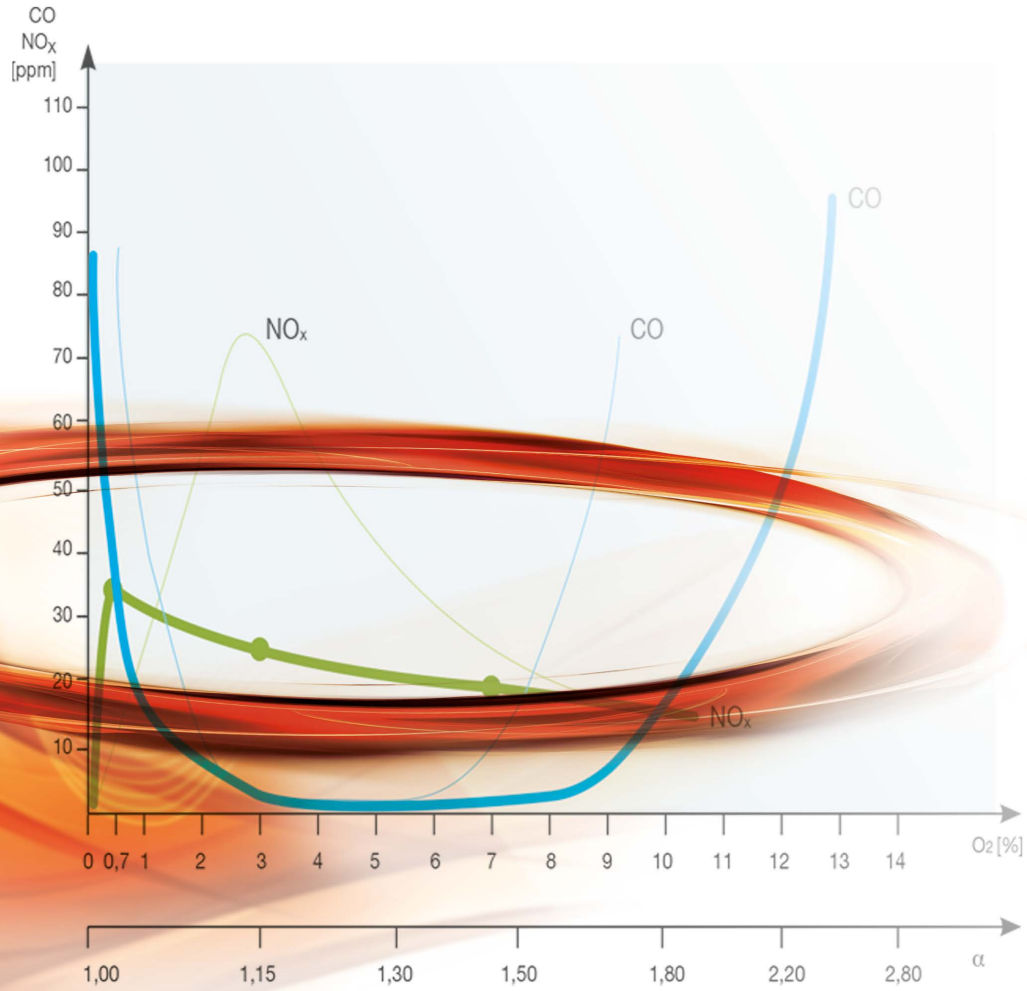
CO
NOX
[ppm]
110
100
90
80
70
60
50
40
30
20
10
NOx
CO
CO
NOx
0 0,7 1 2 3 4 5 6 7 8 9 10 11 12 13 14
O2 [%]
1,00 1,15 1,30 1,50 1,80 2,20 2,80
α

FLAME CONTROL UNITS, SIGNALS AND FUNCTIONS

Progressive burners can be controlled by a 3-point signal (high/low flame) through the appropriate terminals. However, depending on the type of application and automation of the boiler, other types of signals can also be used, both at the burner input (analog modulation) and at the output (feedback signal proportional to load percentage, corresponding to actual power). A typical configuration in many boiler rooms may be, for example, using a 4÷20 mA input signal, with feedback through a potentiometer on the burner servo drive. Another very common case is the use of serial communication between several electronic control units in the boiler room. In this case different protocols (for example, Modbus), as well as different standards for signal connection and control (for example, RS-485) may be used.

BURNERS	CONTROL UNITS	FUELS		INPUT		
		SINGLE FUEL	DUAL FUEL	3-point modulation (high/low flame)	analog modulation [4÷20 mA]	analog modulation [0÷10 V]
mechanical models	LME 73.000 + PME 73.831	●	●	●	○	○
electronic models (EA)	LMV 20.100	●	–	●	–	–
	LMV 27.100	●	–	●	–	–
	LMV 37.400	●	–	●	●	○
el. mod. (EB)	LMV 37.400	●	–	●	●	○
el. mod. (EC)	LMV 26.300	–	●	●	●	○
el. mod. (ED)	LMV 26.300	–	●	●	●	○
el. mod. (ES)	LMV 51.100	●	●	●*	●	●
el. mod. (EI)	LMV 51.300	●	●	●*	●	●
el. mod. (EO)	LMV 52.400	●	●	●*	●	●
el. mod. (EK)	LMV 52.400	●	●	●*	●	●

NOTES:

INPUT analog modulation

OUTPUT feedback signal proportional to load

● function available on standard burner

○ function available upon request; extra price may be applied on custom products

* configurations subject to usage limitations; for technical details, please contact the nearest CIB Unigas branch office

Configuration samples

1) Suppose the project specifications require a burner R515A with direct interface to boiler control unit.
   Analog input signal to the burner: 4÷20 mA (input from external load controller)
   Feedback signal to the boiler: potentiometer on servo drive, 0÷1000 Ω (output proportional to load percentage)
   According to above table, first row, select a mechanical burner; in this case a simple progressive unit (PR) will suffice.
   For example, R515A model M-.PR.S.IT.Y.1.65
   Letter "Y" identifies burner customization.

2) Let's suppose a different case. Plant specs require a modulating gas burner, with signal 0÷10 V (output proportional to load percentage). The burner has to work in continuous service mode (without stopping every 24 h).
   In this case the selected control unit is a LMV37.400 (see table, 4th row) and the burner model is electronic, EA.
   Thus, burner type R515A model M-.MD.S.IT.Y.1.65.EA

Some functions are present on standard CIB Unigas burners, others may be requested during quotation phase and will require, as a result, modifications to standard products (such as adding a signal converter at the input or output terminals). The following table lists available configurations, depending on the burner model and the required functions. Customers are advised to specify in detail all the required functions when applying for a commercial offer, which will allow us, in turn, to configure the correct burner model, including OEM parameters of electronic control units, where necessary. If the desired signal combination is not included in this table, please contact our technical department in order to find a solution that suits your requirements.

	OUTPUT			OTHER FUNCTIONS			
	load signal [4÷20 mA]	load signal [0÷10 V]	load signal [0÷1000 Ω]	INVERTER	OPERATION 24h/24h non-stop (continuous operation)	MODBUS via RS-485	OXYGEN CONTROL
	○	○	○	–	–	–	–
	–	–	–	–	–	–	–
	○	○	–	–	–	○	–
	○	○	–	–	○*	○	–
	–	–	–	●	○*	○	–
	○	○	–	–	–	○	–
	–	–	–	●	–	○	–
	●	○	–	–	●	●	–
	●	○	–	●	●	●	–
	●	○	–	–	●	●	●
	●	○	–	●	●	●	●

3) Like in the previous example, suppose the designer require to add VSD (variable speed drive, or inverter) to the fan motor instead of 0÷10 V signal. The control unit is still a LMV37.400 but the burner model is now EB (see table, 4th row).
Burner type R515A model M-.MD.S.IT.Y.1.65.EB

4) Last example, similar to previous ones but suppose now that both functions are required (feedback signal and motor VSD), plus continuous service as before. The burner control unit must support all these functions at the same time, hence select an electronic cam LMV51.300 and a burner model EI (see table, 9th row). The burner will then be an R515A model M-.MD.S.IT.A.1.65.EI

ADJUSTMENT OF THE BURNERS

When choosing the burner, the designer may select one among the following configurations.

TN (single-stage)
Burners with single-stage regulation operate in ON-OFF configuration: when an external switch (e.g. the boiler regulation thermostat) closes, the burner is switched on, and then operates at maximum power. When the generator set-point is reached, the contact opens, the flame is switched off and the burner is kept in stand-by.

AB (two-stage)
Burners with two-stage regulation operate in HIGH-LOW flame configuration: a signal from the boiler regulation thermostat brings the burner to high flame (maximum power); as soon as the high flame threshold is reached, the burner shifts quickly to low flame (minimum power). When the lower threshold is reached, the burner reverts to high flame. Boiler temperature will thus oscillate around the desired setpoint. If the thermostat limit threshold is exceeded, the flame is switched off and the burner shifts into stand-by. The two-stage regulation allows higher yields (efficiency).

PR (progressive)
Conceptually, progressive burners operate like two-stage ones, i.e. with high-low flame type regulation. The difference is that transients between two stages follow a regulation control curve (combustion air-fuel ratio). AB burners are limited by the power difference between high flame and low flame stages; PR regulation, while retaining the same functional characteristics, does not pose such limits - the combustion is always well regulated, even at intermediate power output. Additionally, liquid fuel PR burners are equipped with a single variable-flow nozzle instead of two nozzles (one for each stage); in case of variable load operation, load transients do not require large power jumps.

Note: if the boiler control unit requires burner control via an analog input signal (e.g. 4 ÷ 20 mA or 0 ÷ 10 V), please select a PR model burner. When requesting a quotation, specify the signal type given by the control unit, and the required feedback signal (e.g. 0 ÷ 1000 Ω via potentiometer on the actuator).
Attention, the burner configuration may vary according to the specific requests. See page 302 for a detailed explanation of I/O signal options.

MD (modulating)
Modulating burners are equivalent to PR ones, but supply includes by default a power regulator based on PID control system. The regulator synchronizes burner power and required load, via a feedback signal coming from a sensor installed on the boiler (also called modulation probe). Thermocouples can be used (for hot water and superheated water boilers, diathermic oil heaters, hot air generators, ovens and furnaces) or pressure transducers (for steam boilers). The air-fuel ratio is adjusted along a curve over the entire working range.

PR or MD burners with electronic cam
Electronic cam burners employ the same operating principle as the corresponding mechanically regulated burners: the air-fuel ratio curve is stored in the electronic unit memory, rather than being physically set by a variable cam connected to servo motors. The electronic cam is extremely precise and offers several advantages, first of all overcoming limitations of mechanical linkages (e.g. wear, play between the moving parts, hysteresis). On the other hand, control units are more sensitive to electromagnetic interference, therefore quality of power supply is a fundamental factor in thermal plant design.

Note: to order a modulating burner, please select the desired probe separately.

Controlled variable	Temperature/pressure range
Temperature (*)	-15 ÷ 50 °C
Temperature	30 ÷ 130 °C
Temperature	0 ÷ 400 °C
Temperature	0 ÷ 1200 °C
Pressure	3 bar
Pressure	10 bar
Pressure	16 bar
Pressure	25 bar
Pressure	40 bar

(*) shot air probe

Other sensors and/or different scales available upon request.

Control range and modulating ratio of a burner

Each burner, whether with an on-board or separate fan, is characterized by its performance curve defined by the minimum and maximum output within which it can operate. The modulating ratio is defined as the actual ratio between the minimum and maximum output of a specific thermal group burner-boiler (or burner-generator). The Performance curve is therefore quite different from the modulating range of the burner.

To better understand this concept let's make an example:
Consider a burner with a performance curve of 1.000 kW – 5.000 kW combined to a boiler that requires an output of 5 MW. If we assume a modulating ratio of 1:4, the minimum achievable output is 5.000 kW: 4 = 1.250 kW.

The same burner, matched to a boiler which requires a max output of 4 MW, with exactly the same modulating ratio of 1:4, delivers a minimum output of 1.000 kW.

Let's consider the very same burner matched to a boiler which requires 3 MW only. Since the burner cannot work below its mechanical limits, it will operate with a reduced modulating ratio 1.000 kW: 3.000 kW = 1:3.

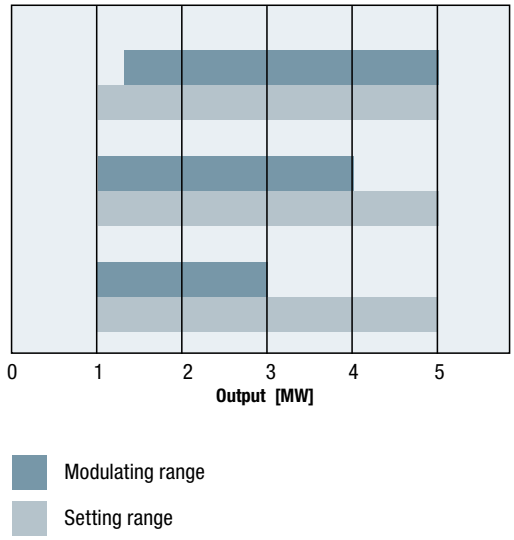

It's important to remember that the modulating ratio of any burner is strongly affected by the boiler on which it is installed. To obtain the best performance, it is recommended to choose the burner with the widest possible modulating ratio, and the maximum output as close as possible to that required by the boiler.

For example, if the working point of the boiler (point A in the picture) can suit many burners, it is recommended to pick up the model whose maximum output is closer to that required (curve 1). This is the best choice, both economically (smaller burner size), and technically, because it provides the widest modulating ratio.

A burner similar to curve 2 in the example, could only operate at an output which is already close to its min limit, and this would not allow any modulating ratio, meaning a completely negative situation.

Finally, let us remember two further factors that can affect the modulating ratio:

- the boiler or heat generator manufacturer, as a rule, writes the maximum recommended modulating ratio to prevent the temperature of the flue gases at the minimum output to fall below the condensation limit.
- liquid fuel burners are bounded to the modulating ratio of the nozzles (typically 1:3 - 1:4, except special applications).

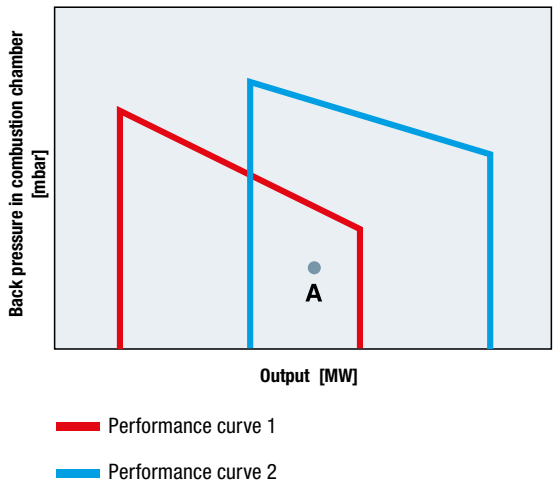

Burners with high modulation ratio

A special high modulation ratio customization is available on Class 2 gas and dual fuel burners with electronic control (variants with LMV51/52 units). This configuration can guarantee a ratio 1:6 between minimum and maximum power (1:10 with inverter).
This excellent performance is achieved by precisely dosing air flow at low power, while maintaining required flame stability.
High modulation ratio is recommended when project specifications call for an extremely low minimum load, and it is not possible to achieve this with other means (e.g. several smaller burners in cascade control).

Typical examples include burners for condensing boilers, applications such as processing plants or furnaces (e.g. food cooking ovens).

However, it is not recommended to use such configuration when there is risk of acidic condensate formation at the chimney (exhaust gases temperature too low), on ordinary steam boilers for example.

The use of burners with a high modulation ratio should always be agreed upon with the boiler or furnace manufacturer.

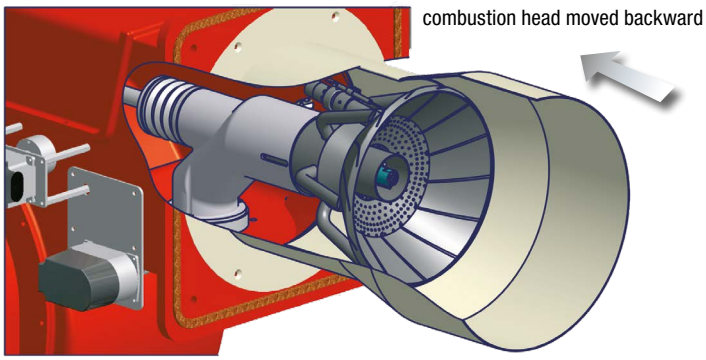

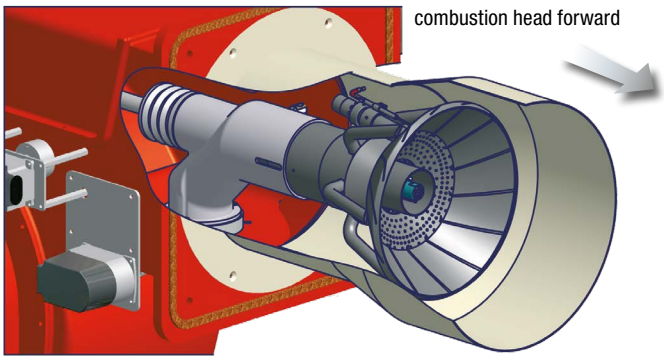

How to choose a monobloc burner in altitude

To ensure a complete and safe combustion, the burner must be supplied with the correct flow of oxygen. The amount of oxygen available is proportional to the density of the combustion air, and the density depends on the environmental conditions.
For this reason, the performance curves of the burners are defined under standard environmental conditions at sea level with temperature 15 °C and pressure 101,3 kPa.

Of course, under real operating conditions, the temperature and pressure of the air change constantly. If the air density decreases (e.g. when summer temperatures are very high) also the oxygen available in one cubic meter of air is reduced and vice versa: this difference must therefore be taken into account.
Small daily variations are usually within the tolerances defined by the standard, so they are negligible.
On the other hand seasonal variations must be compensated, therefore it is suggested to schedule periodical checks of the combustion during the year. In this way, the formation of carbon monoxide (CO) is avoided, as the combustion is always in excess of air: typically the residual oxygen is fixed at 3%.

It should also be remembered that the atmospheric pressure and air density decrease as the altitude increases. Up to 300 meters this variation is negligible. However in case the burner is intended to work in mountainous regions such as the Alps, it is necessary to recalculate the parameters of the system.

In order to avoid mistakes in calculations always remember to provide also the altitude of the thermal output plant at the moment of the offer!

The table on the right gives the correction factors to be applied to the calculations. Below is an example of how to choose a monobloc burner in altitude.

Suppose you have to select a burner intended for the city in altitude. This city is surrounded by mountains, and the thermal output plant will be built at approximately 1.000 meters above sea level.

The data of the boiler to be matched are:
- nominal output Pn 4.000 kW
- efficiency η 91 %
- back pressure in combustion chamber Cp 12 mbar
- fuel natural gas

The first step is to calculate the output (Pb) required to the burner:

$$P_b = \frac{P_n}{\eta} = \frac{4.000}{0,91} = 4.400 \text{ kW}$$

Installation height above sea level	Correction factors	
	K_1 (Power)	K_2 (Back-pressure in the combustion chamber)
300	1,036	1,074
400	1,049	1,100
500	1,061	1,127
600	1,074	1,154
700	1,087	1,182
800	1,100	1,211
900	1,114	1,241
1.000	1,128	1,272
1.200	1,155	1,334
1.400	1,184	1,402
1.600	1,213	1,472
1.800	1,243	1,546
2.000	1,276	1,628
2.400	1,342	1,801
2.800	1,410	1,988
3.200	1,483	2,199
3.600	1,561	2,437
4.000	1,644	2,703

Note the altitude of the plant above sea level (1.000 meters) and obtain the correction coefficients K1 and K2 from the table. In this case:
K_1 = 1,128
K_2 = 1,272

Correct the output and back pressure by applying K1 and K2 respectively:
P_b (corrected) = P_b x K_1 = 4.400 x 1,128 = 4.960 kW
C_p (corrected) = C_p x K_2 = 12 x 1,272 = 15,3 mbar

Finally, it is possible to pick up the right gas burner for the customer's plant, in this case it is R520A.

Performance curve of the R520A burner

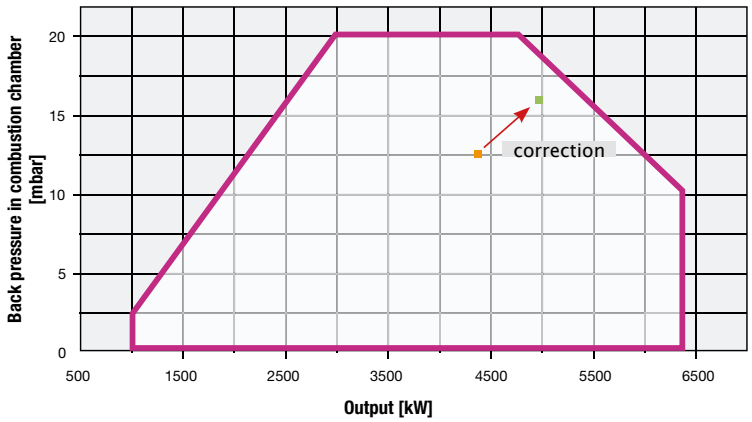

Attention! The correction applied does not change the actual output that the burner must develop. The boiler is always 4.000 kW, and the burner always develops 4.400 kW, then why was a 4.960 kW burner selected?
What has changed is the performance of the fan, which must deliver a sufficient oxygen flow to the fuel combustion.
The choice of burner is therefore made in the following way: the performance curve of the burner is maintained as if the system was located at sea level, but we pretend that the boiler requires a higher performance according to the K1 and K2 coefficients.
This operation is equivalent to maintain the real working point, and reducing the performance curve of the burner. The result is the same but the calculation is simpler and faster.

Very often, for a correct light and heavy oil burners operation, it is necessary to prepare an additional fuel supply line.
In this case, rather than suck the fuel from the tank along separate lines suitable to each individual burner, a low-pressure supply circuit (normally 1 ÷ 2 bar) must be created.
Two of the most common fuel oil configurations are simplified in the following diagrams:

Ref. 01 - Example of a ring circuit for heavy fuel oil burners with mechanical atomization.

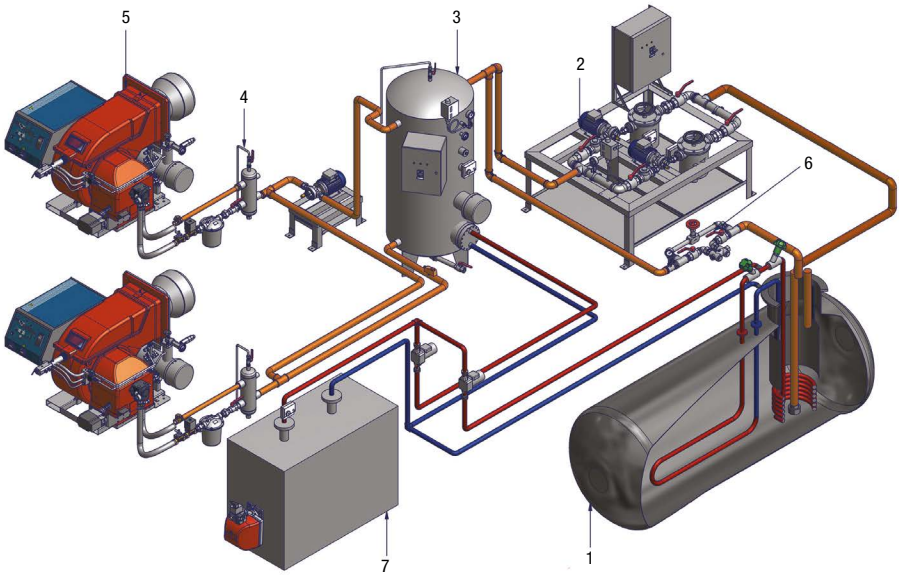

Ref. 02 - Example of a ring circuit for pneumatically atomized heavy fuel oil burners.

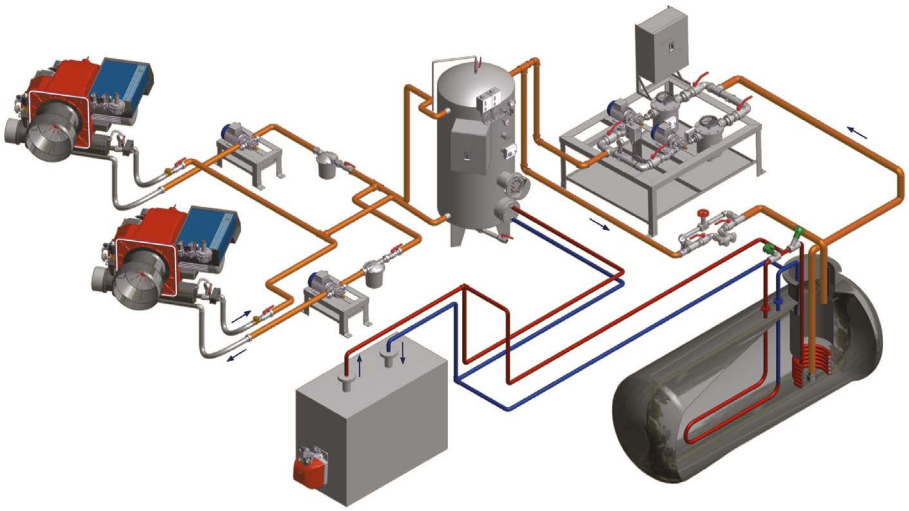

Below is a description, as an example, of some available solutions for oil preheating fuel supply to the burner.
The daily storage service tank (no. 1 in the figure) is heated by a service boiler (no. 7) with a steam or hot water boiler; its target is to keep the heavy fuel oil liquid enough to keep the necessary pressure inside the ring circuit.
The capacity of the service tank (no. 3) provides, if necessary, an additional temperature difference before supplying the oil to the burner (no. 5). The burners themselves are supplied through degassing tanks (no. 4), which allow to separate the gas which forms in the heated fuel oil.
On the back, below item no. 6, there's a pressure regulator.
CIB UNGAS can supply, upon request, pumping units for diesel and heavy fuel oil, pressure regulators and degassing tanks.

VARIABLE SPEED DRIVE FOR ELECTRONICALLY CONTROLLED BURNERS

The burner fan motors can be driven directly, or indirectly through a frequency converter (Variable Speed Drive, VSD).
In order to equip a burner with a frequency converter, first select an electronically controlled model (EB, ED, EI, EK, EG, ER, LG, LR); then select a VSD based on the power of the burner fan (see table below on this page).
For example: burner model N880X is equipped with an 18,5 kW fan motor, thus select an 18,5 kW VSD + braking chopper.

SUPPLY LIMITS AND CONDITIONS

Frequency converter loose supplied

- Inverter equipped with metal backplate suitable for wall mounting; IP54/IP55 protection class.
- Braking resistors (b. chopper) are loose supplied (IP54).
- Electromagnetic filter (EMC) class A2 or A1/B (suitable for shielded cable up to 20 m).

Frequency converter with electrical cabinet

- Frequency converter (IP20 protection class), built-in inside the burner electrical cabinet (IP55 protection class).
- Braking resistors (b. chopper): IP54 protection class.
- Electromagnetic filter (EMC) class A1/B (suitable for shielded cable up to 20 m).
- Select a burner equipped with cabinet-type control panel; see cabinets specifications, next page.

Frequency converter table					
Burner size	Fan motor power, kW	Inverter power, kW	Braking resistors	VSD protection class	Braking resistors protection class
90 / E190X / E205A	3,0	3,0	-	IP20 / IP54	-
91	4,0	4,0	-	IP20 / IP54	-
92	5,5	5,5	-	IP20 / IP54	-
93 / 510 - RX92R / 92.1 - HRX92R / 92.1	7,5	7,5	-	IP20 / IP54	-
512	9,2	11,0	-	IP20 / IP54	-
515	11,0	11,0	-	IP20 / IP54	-
520	15,0	15,0	-	IP20 / IP54	-
525	18,5	18,5	-	IP20 / IP54	-
G215X/250X	3	3	•	IP20 / IP55	IP54
G290A/G310A/G310X	4	4	•	IP20 / IP55	IP54
H365X / H455A	7,5	7,5	•	IP20 / IP55	IP54
H440X / H500X / H630A / H685A	9,2	11,0	•	IP20 / IP55	IP54
K590X / K750X / K750A / K890A / K990A	15,0	15,0	•	IP20 / IP55	IP54
1025 / N880X	18,5	18,5	•	IP20 / IP55	IP54
1030 / N925X / N1060A	22,0	22,0	•	IP20 / IP55	IP54
1040 / N1060X / N1300A	30,0	30,0	•	IP20 / IP55	IP54
2050R / 2050	37,0	37,0	•	IP20 / IP55	IP54
2060	45,0	45,0	•	IP20 / IP55	IP54
2080	55,0	55,0	•	IP20 / IP55	IP54

Note: packaging included (wooden crate suitable for road transport).
Standard UE power supply: 400 V AC 3ph. 50 Hz; other options available, please make an inquiry if interested.
Shielded cable between burner motor and VSD: not included. If design specifications require a cable longer than 20 m, please make request for a higher-class EMC filter.
Inverters for smaller burners (not included in the table): available on request, please contact nearest CIB Unigas branch office.

Attention: burners in EB, ED, EI, EK, EG, ER, LG or LR configuration can work exclusively through a VSD coupled to the fan motor.
It is also possible to provide a modified burner, configured for inverter, but additionally equipped with a delta-star starter. The customer may then decide whether or not to use the inverter according to project requirements.
This option must be requested during quotation phase, before order.

Separate electrical panels for burners

Standard burners are provided with integrated electrical panels which include all electronic automation and all necessary components for a correct and reliable operation.

Alternative solutions to the integrated control panel are available upon request:
- Wall mounted control panel according to customers' specifications.
- Floor standing electrical panel; it has its base, and it is provided with a tilting panel.
- Large electrical panel with base plate (Closet type); this type of panel allows to mount an inverter or other necessary electronical equipment.

Floor standing

All electrical panels are provided with a door lock.

	Maximum dimensions		
Electrical panel type	width [mm]	depth [mm	height [mm]
Floor standing	600 - 1000	500	1000
Closet type	600	400	2000
Wall mounted	400 - 600	200 - 300	600 - 700

Protection degree of self-supporting switchboards: IP55 (or higher upon request)

Closet type

The dimensions indicated are valid for the configurations widely used in boiler rooms.
Based on the specifications of the heating system, it is possible to realize electrical panels of different sizes, or prepare one common electrical panel to several burners.

Note: If you select the option "control cabinet type", you need to specify the cable entry position (cable entry from the bottom or top of the electrical panel housing).
Note: Some combinations have restrictions on the passage of signals from and to the outside to electronical equipment. To order a special electrical cabinet, the length of the electrical connections between the panel and the burner must be worked out in advance.

For burners with a special configuration, please ask our Technical Department.

Wall mounted

EMISSIONS

The subject of emissions is very wide and complex. The scientific literature in this field is under continuous update and there's no way to describe it briefly.
The boiler room is a source of pollution caused by the combustion of hydrocarbons. Combustion products consist mainly of nitrogen, carbon dioxide and steam delivered into the atmosphere through the chimney. The products of secondary combustion include a long list of chemicals, such as (CO), nitrogen oxides (NO_x), fine particulate matter (PM) and others. The normatives in force provide their max limits.
The level of emissions depends on many factors, including:
- fuel composition;
- shape of the combustion chamber and characteristics of the boiler;
- type of burner head.

For example, liquid fuels usually contain sulphur and other impurities.
These substances do not burn, therefore, if there is a need to reduce emissions, it is necessary to use a high-performance burner or to use complex systems for the treatment of fumes.
The emissions of nitrogen oxide also depend on the characteristics of the combustion chamber and the combustion head.
Due to the fact that the limit values required by the technical standards for the environmental protection are more and more restricted it is necessary to pay particular attention to propose a correct choice of burner and boiler.
CIB UNIGAS Technical Management keeps always an eye on new technologies to reduce emissions. For these reasons CIB UNIGAS has been investing in the development of low environmental impact burners.

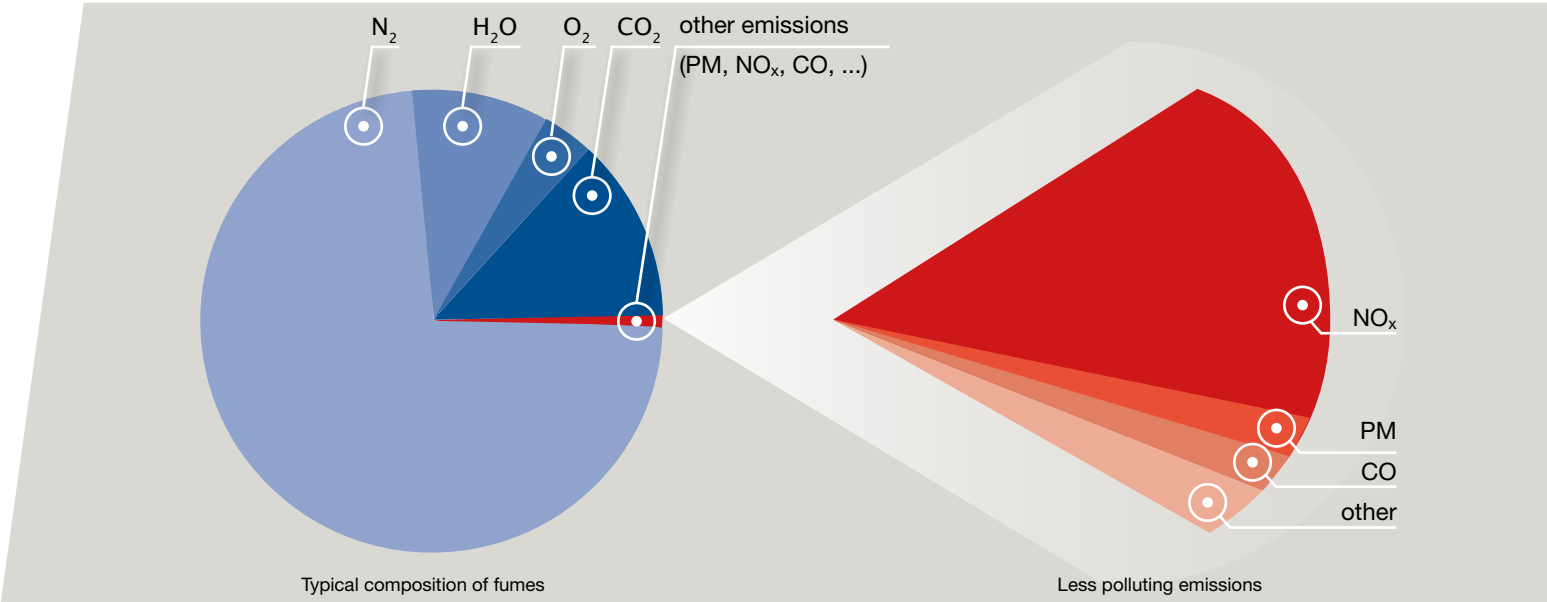

All CIB UNIGAS burners are certified for both gaseous and liquid fuels in accordance with European standards and meet the requirements for polluting emissions.
Measurements of CO and NO_x emissions are carried out on standard size boilers, with all test conditions.

TABLE: LIMIT VALUES FOR EMISSIONS OF NITROGEN OXIDES AND CARBON MONOXIDE ACCORDING TO THE EUROPEAN STANDARD

Type of fuel	Burner class	Unit of measurement	CO	NO_x	Standards
natural gas	Class 1	mg/kWh	100	170	UNI EN 676
natural gas	Class 2	mg/kWh	100	120	UNI EN 676
natural gas	Class 3	mg/kWh	100	80	UNI EN 676
LPG gas	Class 1	mg/kWh	100	230	UNI EN 676
LPG gas	Class 2	mg/kWh	100	180	UNI EN 676
LPG gas	Class 3	mg/kWh	100	140	UNI EN 676
light oil	Class 1	mg/kWh	110	250	UNI EN 267
light oil	Class 2	mg/kWh	110	185	UNI EN 267
light oil	Class 3	mg/kWh	60	120	UNI EN 267

CIB UNIGAS burners, NOx emissions:
- Low NO_x gas burners correspond to Class 2, Ultra Low NOx burners without FGR correspond to Class 3.
- LPG burners correspond to Class 1, Low NOx LPG burners correspond to Class 3;
- Oil burners have a maximum NOx emission of 250 mg/kWh (Class 1);
- Heavy fuel oil burners (non-standard fuel oil) can, in the worst case, reach a maximum NOx emission of 700 mg/kWh.

CIB Unigas also offers Low NO_x solutions for complex systems and revamping of existing plants.
As far as carbon monoxide (CO) is concerned, a properly set CIB UNIGAS burner delivers a very small CO level.

If necessary, CIB UNIGAS offers FGR (Flue Gas Recirculation) solutions – these are burners with flue gas recirculation system which deliver emissions of less than 50 or 30 mg/kWh. Burners with FGR are designed for installations with Low NO_x emissions requirements, such as greenhouses or boilers in large residential areas where low levels of contaminants are a priority. Our FGR solutions meet environmental impact requirements.

The burners belonging to the different classes of NO_x emissions are identified by the following logos:

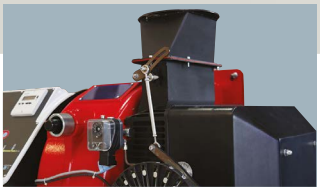

FGR 50 mg/kWh with air inlet silencer

FGR 30 mg/kWh with air inlet silencer

Often non-EU countries follow different normatives and measurement conditions. To ensure that the levels of pollutant emissions are always correct, it is necessary to know exactly the conditions in which tests were carried out, i.e. measurement of the gas, the error, type of fuel, boiler size, atmospheric conditions, etc...
In addition, standards can use different units of measurement*, therefore for the comparison, it is necessary to translate the limit values expressed as follows in mg/kWh (milligrams per kilowatt hour), using the correct formula, depending on the selected fuel and residual oxygen in the exhaust gases.
* For example: ppm (parts per million), mg/Nm^3 (milligrams per normal cubic meter), etc...

WHY DIFFERENT THERMAL GROUPS RELEASE DIFFERENT LEVELS OF NITROGEN OXIDES AT THE SAME OUTPUT?

The CO, NO_x and other pollutants are strongly influenced by a number of factors, not always burner related. There are factors independent from the thermal plant, such as environmental conditions (altitude, humidity, fuel composition, etc…) and factors related in particular to the design of the generator. The most important factors are summarized below.
It becomes evident that burner and boiler must be evaluated as a single thermal group, in order to comply to the rule on emission levels, or to the specific requirements of designers. The correct match between burner and boiler is discussed in greater detail on the following pages.

BOILER TYPE

↓

- type of generator (reverse flame, or 3 smoke-pass)
- dwell time of the flame within the combustion chamber
- heat exchange surface
- temperature and type of heat transfer fluid

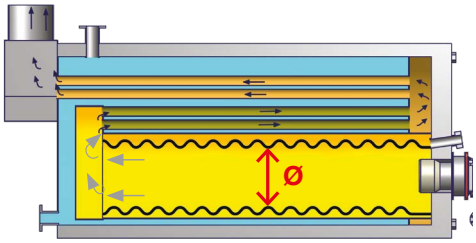

DIMENSIONS OF THE COMBUSTION CHAMBER

↓

- combustion chamber internal gas circulation
- dwell time of the flame within the combustion chamber
- thermal load of the chamber

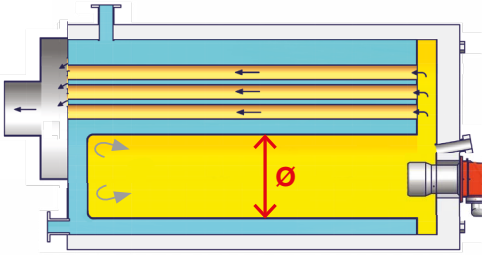

THERMAL LOAD OF THE COMBUSTION CHAMBER

↓

- flame temperature
- speed at which the NO_x is formed

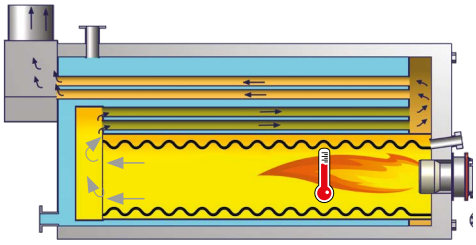

BOILER TEMPERATURE

↓

- flame temperature
- speed at which the NO_x is formed

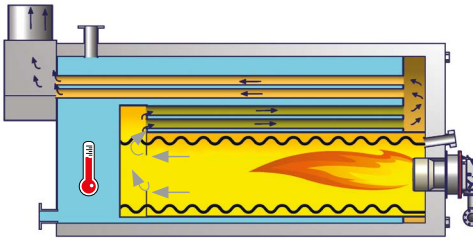

THICKNESS OF THE REFRACTORY OR BOILER DOOR

↓

- length of the combustion head
- internal combustion gas circulation

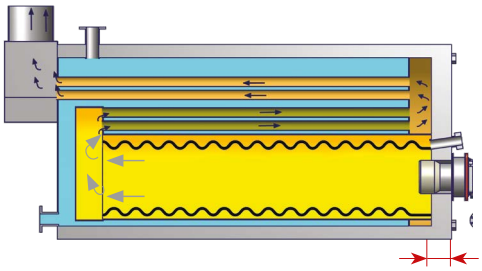

Reverse flame boilers: contact our Technical Department.

Relation between NO_x emissions and CO

Emissions of nitrogen oxides and carbon monoxide are strongly correlated as both depend on the stoichiometry of the combustion. Excess of air affects both emissions and the efficiency of the generator. In a logic of compromise, reducing fuel consumption requires a reduction of excess air.
The limit is given by the emission of CO.
In the burners of the previous generation this choice had priority on NO_x emissions.

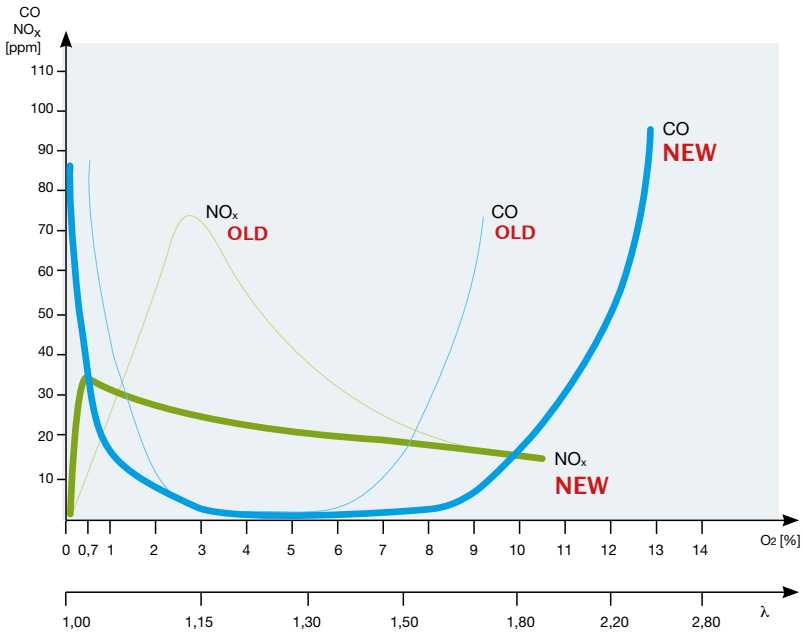

THE "ECOLOGIC" BURNER SERIES HAS REACHED A GREAT GOAL: WIDE RANGE OF COMBUSTION FLEXIBILITY

The development of low burners emissions represent a real revolution in the way NO_x and CO interact when changing the excess of air.
The new series of Low NO_x burners from the CIB UNIGAS ensures zero CO values in a very wide range of operation, with residual oxygen between 0,5 % and 8 %, while maintaining low NO_x emissions almost constant.
The advantage is obvious: the careful choice of the the generator makes possible, for example, to set the oxygen at 1.5% without formation of CO; increasing the efficiency of the thermal group without deteriorate the NO_x emissions.
Economical and ecological.

ECOLOGIC

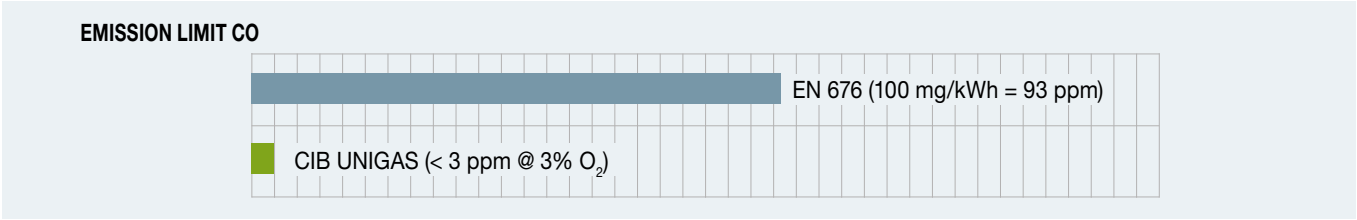

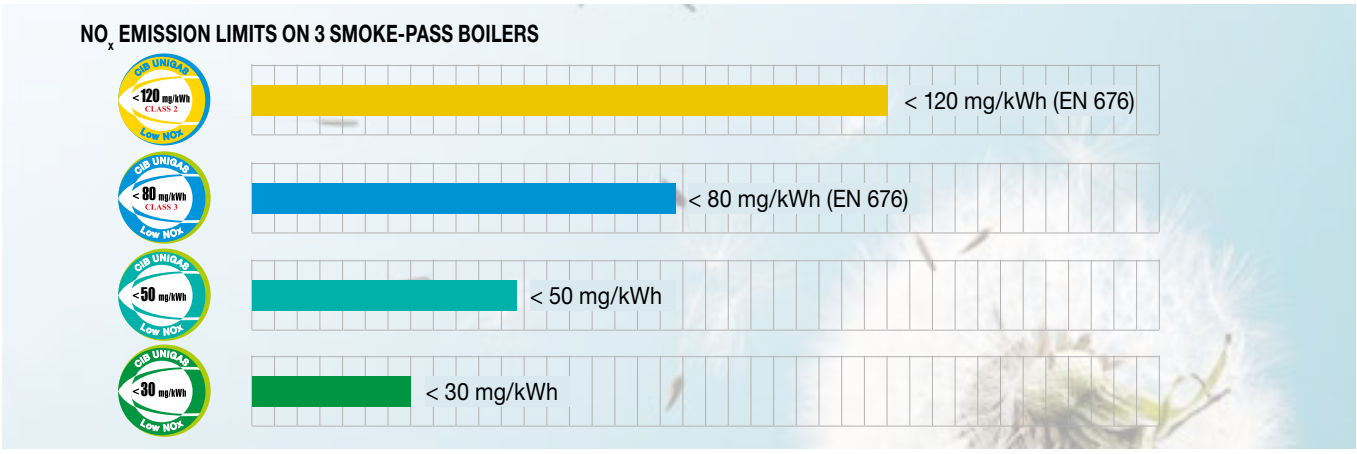

Reverse flame boilers: contact our Technical Department.

MATCHING LOW NO_x BURNER AND HEAT GENERATOR

The procedure to match a burner and evaluate the emissions attainable by a thermal unit can be divided in a few simple steps. The first one is to check the operating point of the generator and select a suitable burner size. The next step is to calculate the thermal load of the combustion chamber and use this data to estimate NO_x emissions.
In the case of standard boilers, proceed in the following way.

Let's define:
- combustion chamber diameter D [m]
- chamber length L [m]
- generator nominal power PN [kW]
- boiler efficiency η [%]

The volume V of the combustion chamber is given by the formula

$$V = \frac{\pi}{4} D^2 L \qquad [m^3]$$

The burner required power P_B is equal to

$$P_B = \frac{P_N}{\eta} \qquad [kW]$$

Finally, the thermal load T_L is given by the relationship between power and volume:

$$T_L = \frac{P_B}{V} \qquad [kW/m^3]$$

Example
Suppose you need to match a burner to a 3-smoke pass, hot water boiler, size 5.000 kW.
Efficiency 92%, backpressure 8 mbar
Combustion chamber: diameter 1.050 mm, length 4.000 mm (including reverse chamber)

The burner required power is then 5.000 / 0,92 = 5.435 kW
The boiler working point is inside the operating range of a low NOx burner size K590X (Fig. 1).

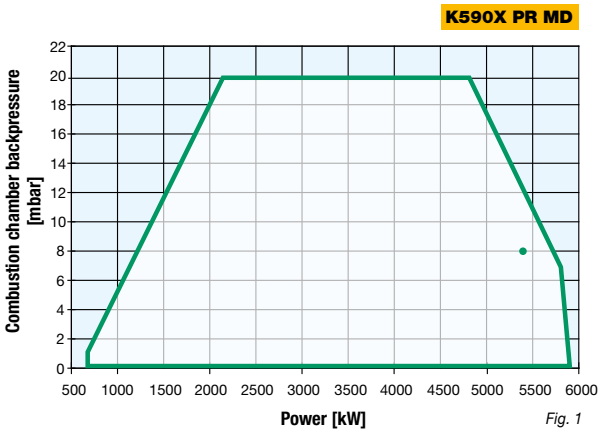

Fig. 1

The steps described above are the same for any other burner.

What follows concerns specifically the matching of "ECOLOGIC" burners serie, with NO_x emissions under 80 mg/kWh.

Combustion chamber volume is equal to
$V = 0{,}78 \times (1{,}05)^2 \times 4 = 3{,}46\ m^3$

Thermal load is given by
$TL = 5.435 / 3{,}46 = 1.569\ kW/m^3 \approx 1{,}57\ MW/m^3$

The next step is to use the diagram "Thermal load vs NO_x" (Fig. 2) for the selected burner (K590X): identify thermal load on the abscissa, draw a vertical line till it meet the NO_x curve, then simply read the emissions value on ordinate.

In the cited example, it is possible to estimate, with good approximation, a NO_x emission value of about 73 mg/kWh. Please note NO_x diagrams are located in the following pages.

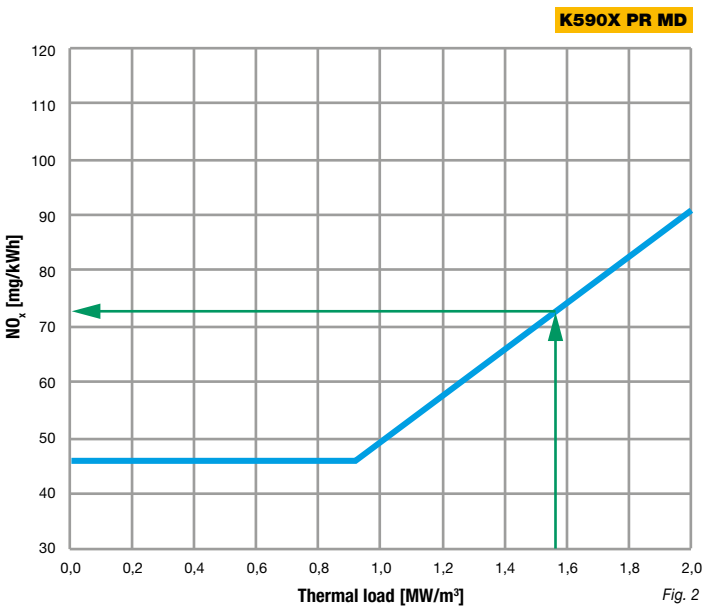

Fig. 2

Reference conditions
- Measurement tolerances according to EN 676 standard
- Temperature: 20 °C
- Dried flue gases
- Barometric pressure: 1013 millibars
- Relative humidity: 70 % (equivalent to 10 g H_2O/kg of air)
- Boiler temperature: 110 °C
- Fuel: G20 (natural gas, 100 % CH_4)
- Three-smoke pass boiler

The final step is to check blast tube dimensions, in relation to combustion chamber, because they are a critical parameter to obtain the expected emissions.
Two conditions should be met:

1) It is recommended that the diameter of the chamber is 2,5 to 3 times larger than the diameter of the burner mouthpiece (blast tube).
2) The low NO_x blast tube must penetrate 150÷200 mm into the combustion chamber.

In the cited example, the boiler chamber diameter was 1050 mm, so the optimal blast tube diameter lies in the range between 350 mm and 420 mm.
The dimensional table on page 103 shows that K590X blast tube diameter is equal to 360 mm, thus the first condition is met.
Regarding the blast tube length, suppose the boiler door is 350 mm thick, refractory included. The blast tube must penetrate at least 150 mm as said above, thus the long blast tube variant is selected (530 mm). The short blast tube (430 mm) is insufficient as it only penetrates by 80 mm into the combustion chamber.
To properly install the burner, please refer to Fig. 3 to the side.
Of course, it is possible to carry out the reverse procedure as well: given an emission limit that cannot be exceeded by design, the NOx diagram provides the admissible thermal load for a given heat generator. This way, designer can select a suitable boiler based on project specifications and required power. In any case, burner blast tube dimensions must be checked to complete the matching procedure.

If design specifications are very demanding, for example if the boiler thermal load is extremely high, CIB Unigas offers a proven low NO_x solution for your needs: the FGR (flue gas recirculation) system.
Please contact our Technical Dept for further details.

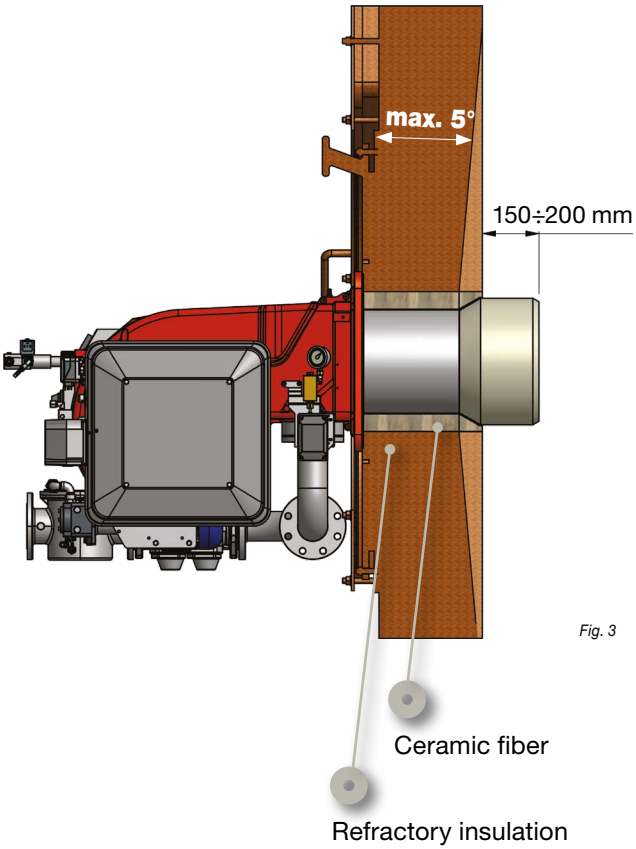

Fig. 3

Reverse flame boilers: contact our Technical Department.

MATCHING LOW NO_x BURNER AND HEAT GENERATOR

C83X

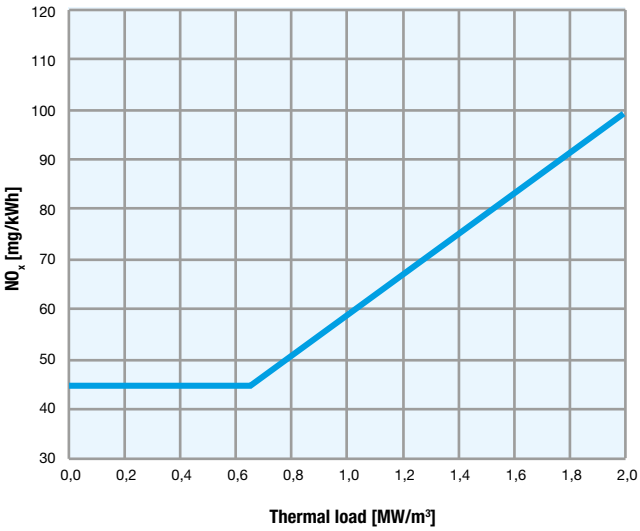

E115X - E140X - E190X

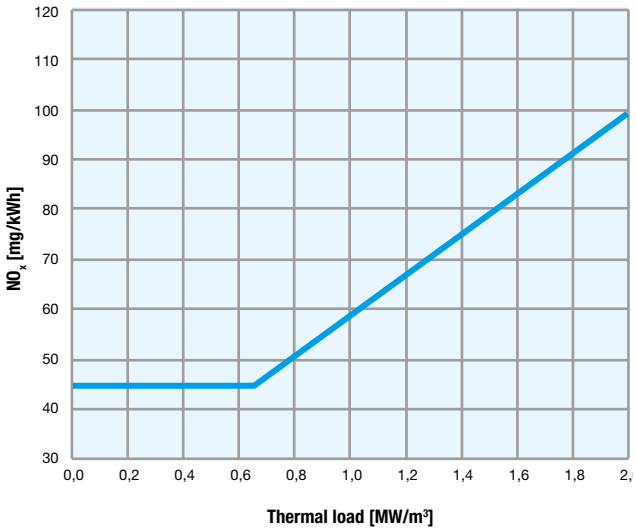

RX92R

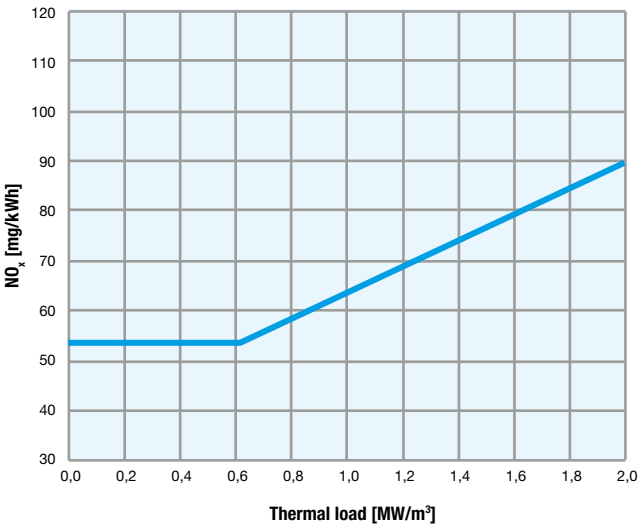

RX92.1

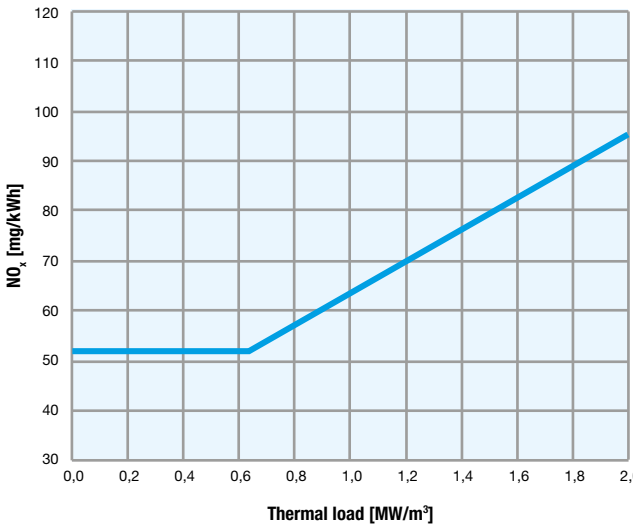

H500X

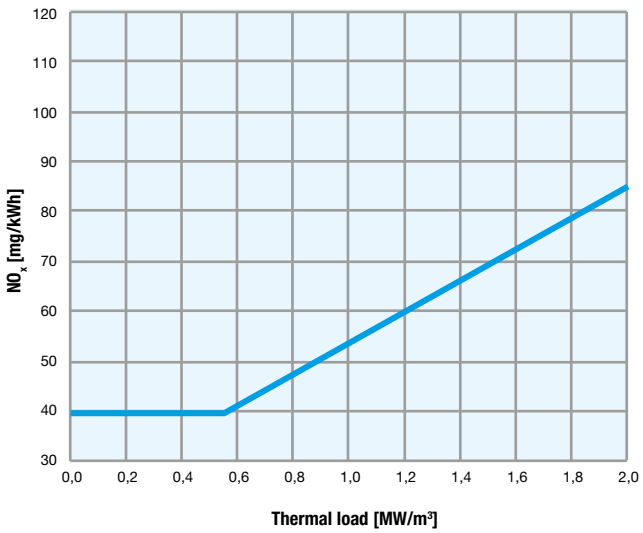

K590X

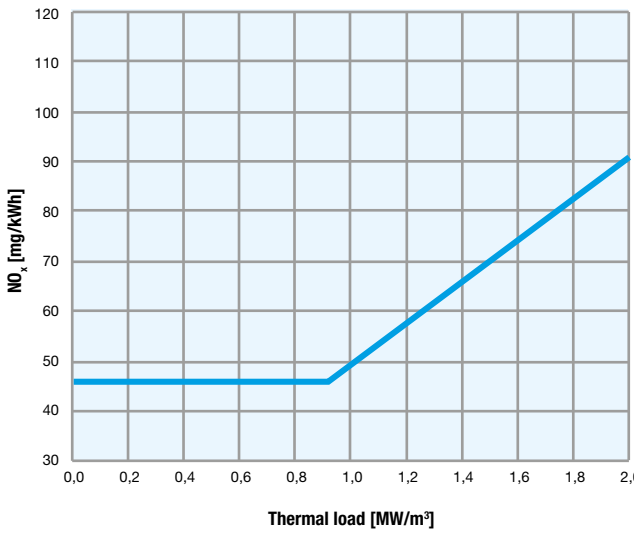

K750X

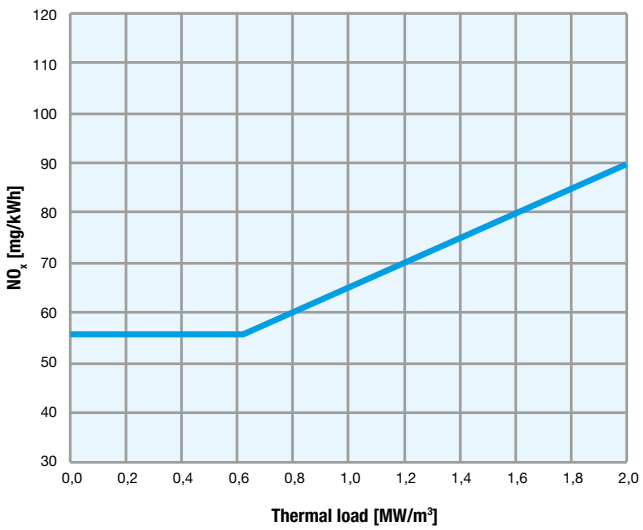

N880X - N925X

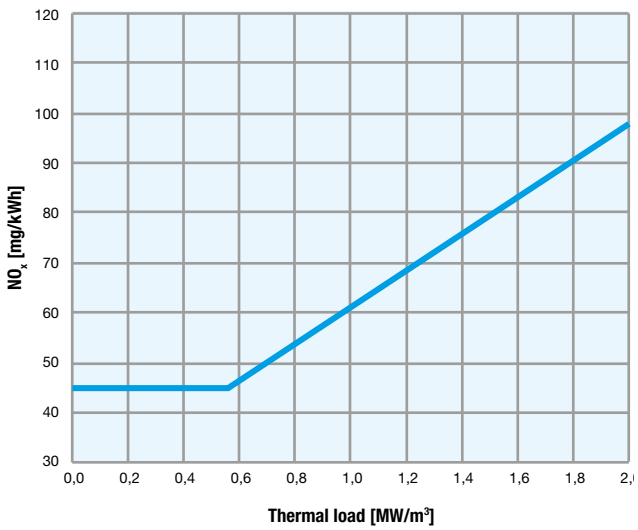

N1060X

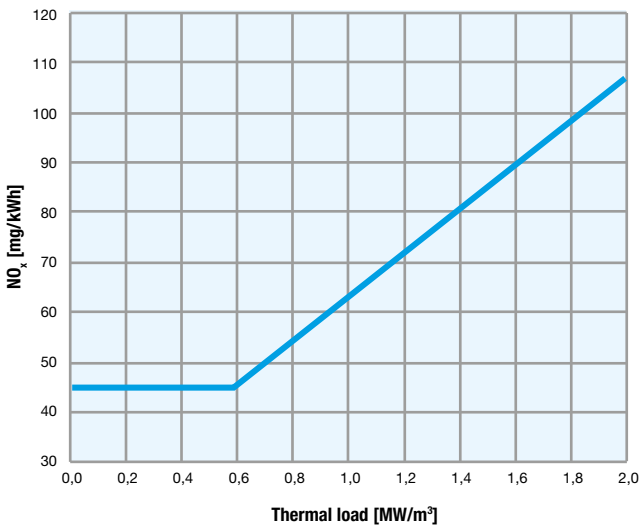

RX2050 - RX2060 - RX2080

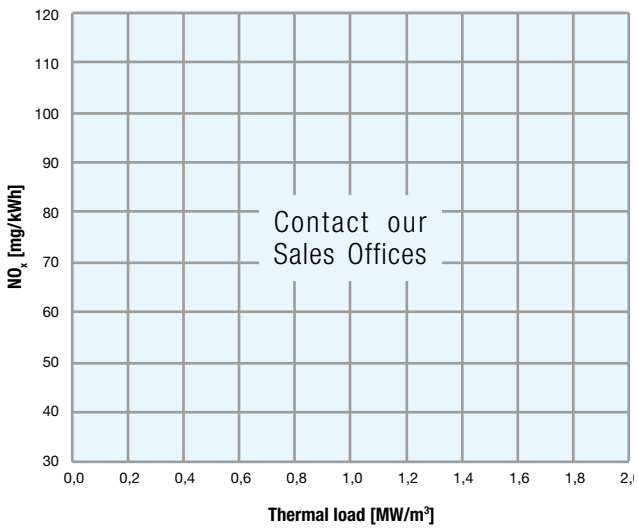

SULFUR OXIDES EMISSIONS

The polluting emissions of sulfur oxides (SO_x) mainly include sulfur dioxide (SO_2) and trioxide (SO_3). These chemicals are particularly aggressive and dangerous, both for the environment and human health.
However, sulfur oxides represent a separate case from CO and NO_x since their production during hydrocarbons combustion does not depend on the burner, nor on the boiler, but only on the quantity of sulfur already present in the fuel upstream of the process.
On the one hand, higher quality, gaseous fuels (methane, LPG) include insignificant amounts of sulfur, and the use of these fuels minimizes hazardous emissions. On the other, the problem is evident in liquid fuels (especially crude oil and heavy fuel oil), whose composition always includes a certain amount of sulfur - it will inevitably be oxidized in the combustion chamber and emitted as SO_x pollutant.

It is possible to estimate the quantity of SO_x produced with the diagram on this page, or with the following procedure.
Given the quantity of sulfur present in the fuel (expressed as a percentage by mass), just multiply this value by a numerical factor, 1.750.
The resulting number represents the emissions of SO_x at the chimney, expressed in mg/kWh.

Example
Given a fuel that contains 0,5 % sulfur, SO_x emissions will be equal to
0,5 x 1.750 = 875 mg/kWh

Conversely, once the SO_x emission limit is known for a given thermal plant, it is possible to calculate the maximum admissible sulfur concentration in the fuel, dividing by the same coefficient above.

Example
Let 300 mg/kWh be the SO_x emission limit required by project specifications.
The maximum percentage of sulfur in the fuel can be 300 : 1.750 = 0,17
The numerical result represents directly the percentage in mass: 0,17 %.

If the fuel oil contains a higher fraction of sulfur, the required limit will be exceeded, regardless of burner or boiler selection!

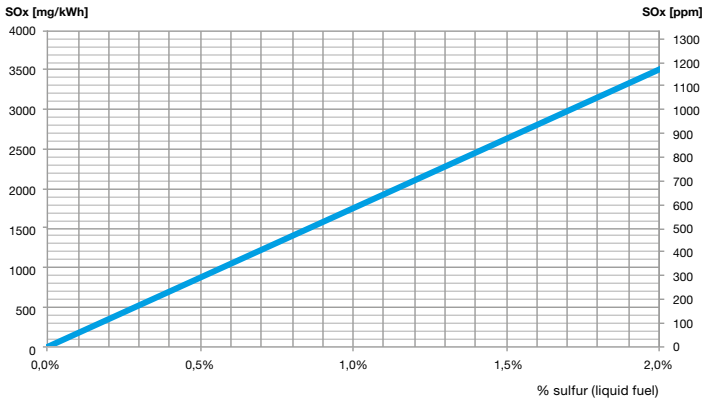

Reference conditions
Heavy fuel oil with net heating value Hi = 9.800 kcal/kg
Residual oxygen at the chimney O_2 = 3 % (λ = 1,15)

ACOUSTIC HOODS BOX ASSEMBLED ON WHEELED FRAME

All burners in this catalogue have lower noise levels than the standard values.
If a further reduction of the burner noise is required, the customer has at his disposal a series of acoustic hoods box that can be integrated in the system.
The noise reduction range varies from 5 to 15 dB(A), depending on the design specification. For more important reductions, please consult our technical department.

INPUT DATA FOR QUOTATION

CIB UNIGAS S.p.A.

Via L. Galvani, 9 (Zona Industriale)
35011 CAMPODARSEGO (PD) - Italy
Tel. +39 049 9200944 - Fax +39 049 9201269
E-mail of the order department: ordini@cibunigas.it

COMPANY		
ADDRESS	CITY	CITY CODE
TEL. /	FAX /	

BOILER:

MANUFACTURER:	MODEL:	
BOILER TYPE:	SMOKE TUBES ☐	WATER TUBES ☐
BOILER OUTPUT: (kW)	STEAM PRODUCTION: (kg/h)	
BURNER OUTPUT: (kW)		
COMBUSTION CHAMBER PRESSURE: (mbar)		
COMBUSTION AIR TEMPERATURE (°C):		
COMBUSTION CHAMBER SIZE - LENGHT:	WIDTH (or dia):	HEIGHT:

THERMAL MEDIUM: ☐ STEAM ☐ WATER ☐ OIL ☐ HOT AIR

STEAM PRESSURE	bar
FEEDING MEDIUM TEMPERATURE:	°C
OUTLET MEDIUM TEMPERATURE (water, air, oil)	°C
FUEL DATA	
FUEL:	LOWER CALORIFIC VALUE (kcal/kg):
DENSITY (kg/m^3):	VISCOSITY: °E (a .....°C)
FUEL TEMPERATURE: (°C)	
PRESSURE AT GAS TRAIN INLET:	mbar
OTHER:	

GENERAL:

POWER SUPPLY	VOLT	Hz

COMBUSTION CONTROL: ☐ ON-OFF ☐ HIGH-LOW FLAME ☐ PROGRESSIVE ☐ MODULATING

REQUIRED TURN-DOWN 1

PROBE: ☐ TEMPERATURE °C ☐ PRESSURE (bar) ☐ OTHER

REQUIRED COMPONENTS: ☐ BURNER ☐ CONTROL PANEL ☐ GAS TRAIN ☐ DRAUGHT AIR FAN

OIL HANDLING UNIT

☐ BACK OIL PUMP ☐ BACK UP OIL FILTER ☐ STEAM HEATER ☐ ELECTRIC HEATER

DRAUGHT FAN SPECIFICATION (when existing fan is used):

FLOW RATE (m^3/h)	AT	mbar OUTPUT PRESSURE
ELECTRIC MOTOR POWER (kW)	BLOWER MODEL	

NOTE:

EDIT BY: DATE:

Certificate
EC TYPE EXAMINATION CERTIFICATE
kiwa
Partner for progress
Number KIP-091058/G
Issued 18-12-2015
Report 150901898
PIN 0476CQ1898
Replaces ---
Scope Directive 2009/142
Page 1 of 2
Kiwa Cermet Italia hereby declares that the products
Forced draught burners
Trade mark: CIB Unigas
Models: as specified in the Annex 1
Manufactured by CIB Unigas S.p.A.
Campodarsego (PD), Italy
meet the essential requirements as described in the
Directive on appliances burning gaseous fuels 2009/142/EC
Mentioned products have been approved for
Appliance type: B23
Gas groups:
Have been tested according to:
EN 676:2008
Chief Operating Officer
Giampiero Balcredi
GASTEC
CERTIFICATO
Nr. 50 100 3422 - Rev.007
Si attesta che / This is to certify that
IL SISTEMA QUALITÀ DI
THE QUALITY SYSTEM OF
CIB UNIGAS
C.I.B. UNIGAS S.p.A.
SEDE LEGALE E OPERATIVA:
REGISTERED OFFICE AND OPERATIONAL SITE:
VIA L. GALVANI 9
IT - 35011 CAMPODARSEGO (PD)
SEDE OPERATIVA:
OPERATIONAL SITE:
VIA L. GALVANI 11
IT - 35011 CAMPODARSEGO (PD)
È CONFORME AI REQUISITI DELLA NORMA
HAS BEEN FOUND TO COMPLY WITH THE REQUIREMENTS OF:
UNI EN ISO 9001:2015
QUESTO CERTIFICATO È VALIDO PER IL SEGUENTE CAMPO DI APPLICAZIONE:
THIS CERTIFICATE IS VALID FOR THE FOLLOWING SCOPE:
Progettazione e fabbricazione di bruciatori di gas, gasolio, olio combustibile, combustibili solidi e misti, per uso civile ed industriale. Supporto tecnico ed organizzativo ai centri di assistenza tecnica esterni (IAF 18, 35)
Design and manufacturing of gas, ligth oil, heavy oil, solid fuel and dual- fuel burners for domestic and industrial purpose.
Technical and organizing assistance to external after sale service agent
(IAF 18, 35)
ACCREDIA
Per l'Organismo di Certificazione
For the Certification Body
TÜV Italia S.r.l.
Validità / Validity
Dal / From: 2018-09-26
Al / To: 2021-09-25
Data emissione / Printing Date
Andrea Coccia
2018-07-23
PRIMA CERTIFICAZIONE / FIRST CERTIFICATION: 2003-10-22
TÜV Italia S.r.l. • Gruppo TÜV SÜD • Via Carducci 125, Pal. 23 • 20099 Sesto San Giovanni (MI) • Italia • www.tuv.it
ZERTIFIKAT ◆ CERTIFICATE ◆ СЕРТИФИКАТ ◆ CERTIFICADO ◆ CERTIFICAT

2020 - M029114CA Rel. 1

FAC-SIMILE

To print this catalogue we have used paper certified FSC®, Forest Stewardship Council®,
supplied by producers respecting the environment, the forests, and who can exhibit specific product certifications.

CATALOGUE - Burners from 480 kW to 80 MW

Let's light up tomorrow

C.I.B. UNIGAS S.p.A.
Via L. Galvani, 9 - 35011 CAMPODARSEGO (PD) - Italy
Tel. +39 049 9200944 - Fax +39 049 9200945 - 9201269
Fax Export +39 049 9202105
cibunigas@cibunigas.it
www.cibunigas.it

Specifications and data subject to change without notice. Errors and omissions excepted.