TG1030
TG1050
TG1080
Light oil burners

MANUAL OF INSTALLATION - USE - MAINTENANCE

CIB UNIGAS

BURNERS - BRUCIATORI - BRULERS - BRENNER - QUEMADORES - ГОРЕЛКИ

M039169CD Rel.3.1 09/2016

DANGERS, WARNINGS AND NOTES OF CAUTION

THIS MANUAL IS SUPPLIED AS AN INTEGRAL AND ESSENTIAL PART OF THE PRODUCT AND MUST BE DELIVERED TO THE USER.

INFORMATION INCLUDED IN THIS SECTION ARE DEDICATED BOTH TO THE USER AND TO PERSONNEL FOLLOWING PRODUCT INSTALLATION AND MAINTENANCE.

THE USER WILL FIND FURTHER INFORMATION ABOUT OPERATING AND USE RESTRICTIONS, IN THE SECOND SECTION OF THIS MANUAL. WE HIGHLY RECOMMEND TO READ IT.

CAREFULLY KEEP THIS MANUAL FOR FUTURE REFERENCE.

1) GENERAL INTRODUCTION

- The equipment must be installed in compliance with the regulations in force, following the manufacturer's instructions, by qualified personnel.
- Qualified personnel means those having technical knowledge in the field of components for civil or industrial heating systems, sanitary hot water generation and particularly service centres authorised by the manufacturer.
- Improper installation may cause injury to people and animals, or damage to property, for which the manufacturer cannot be held liable.
- Remove all packaging material and inspect the equipment for integrity.

In case of any doubt, do not use the unit - contact the supplier.

The packaging materials (wooden crate, nails, fastening devices, plastic bags, foamed polystyrene, etc), should not be left within the reach of children, as they may prove harmful.

- Before any cleaning or servicing operation, disconnect the unit from the mains by turning the master switch OFF, and/or through the cut-out devices that are provided.
- Make sure that inlet or exhaust grilles are unobstructed.
- In case of breakdown and/or defective unit operation, disconnect the unit. Make no attempt to repair the unit or take any direct action.

Contact qualified personnel only.

Units shall be repaired exclusively by a servicing centre, duly authorised by the manufacturer, with original spare parts.

Failure to comply with the above instructions is likely to impair the unit's safety.

To ensure equipment efficiency and proper operation, it is essential that maintenance operations are performed by qualified personnel at regular intervals, following the manufacturer's instructions.

- When a decision is made to discontinue the use of the equipment, those parts likely to constitute sources of danger shall be made harmless.
- In case the equipment is to be sold or transferred to another user, or in case the original user should move and leave the unit behind, make sure that these instructions accompany the equipment at all times so that they can be consulted by the new owner and/or the installer.
- For all the units that have been modified or have options fitted then original accessory equipment only shall be used.
- This unit shall be employed exclusively for the use for which it is meant. Any other use shall be considered as improper and, therefore, dangerous.

The manufacturer shall not be held liable, by agreement or otherwise, for damages resulting from improper installation, use and failure to comply with the instructions supplied by the manufacturer.The occurrence of any of the following circustances may cause explosions, polluting unburnt gases (example: carbon monoxide CO), burns, serious harm to people, animals and things:

- Failure to comply with one of the WARNINGS in this chapter
- Incorrect handling, installation, adjustment or maintenance of the burner
- Incorrect use of the burner or incorrect use of its parts or optional supply

2) SPECIAL INSTRUCTIONS FOR BURNERS

- The burner should be installed in a suitable room, with ventilation openings complying with the requirements of the regulations in force, and sufficient for good combustion.
- Only burners designed according to the regulations in force should be used.
- This burner should be employed exclusively for the use for which it was designed.
- Before connecting the burner, make sure that the unit rating is the same as delivery mains (electricity, gas oil, or other fuel).
- Observe caution with hot burner components. These are, usually, near to the flame and the fuel pre-heating system, they become hot during the unit operation and will remain hot for some time after the burner has stopped.

When the decision is made to discontinue the use of the burner, the user shall have qualified personnel carry out the following operations:

a Remove the power supply by disconnecting the power cord from the mains.

b) Disconnect the fuel supply by means of the hand-operated shut-off valve and remove the control handwheels from their spindles.

Special warnings

- Make sure that the burner has, on installation, been firmly secured to the appliance, so that the flame is generated inside the appliance firebox.
- Before the burner is started and, thereafter, at least once a year, have qualified personnel perform the following operations:

a set the burner fuel flow rate depending on the heat input of the appliance;

b set the flow rate of the combustion-supporting air to obtain a combustion efficiency level at least equal to the lower level required by the regulations in force;

c check the unit operation for proper combustion, to avoid any harmful or polluting unburnt gases in excess of the limits permitted by the regulations in force;

d make sure that control and safety devices are operating properly;

e make sure that exhaust ducts intended to discharge the products of combustion are operating properly;

f on completion of setting and adjustment operations, make sure that all mechanical locking devices of controls have been duly tightened;

g make sure that a copy of the burner use and maintenance instructions is available in the boiler room.

- In case of a burner shut-down, reser the control box by means of the RESET pushbutton. If a second shut-down takes place, call the Technical Service, **without trying to RESET further**.
- The unit shall be operated and serviced by qualified personnel only, in compliance with the regulations in force.

3) GENERAL INSTRUCTIONS DEPENDING ON FUEL USED

3a) ELECTRICAL CONNECTION

- For safety reasons the unit must be efficiently earthed and installed as required by current safety regulations.
- It is vital that all saftey requirements are met. In case of any doubt, ask for an accurate inspection of electrics by qualified personnel, since the manufacturer cannot be held liable for damages that may be caused by failure to correctly earth the equipment.
- Qualified personnel must inspect the system to make sure that it is adequate to take the maximum power used by the equipment shown on the equipment rating plate. In particular, make sure that the system cable cross section is adequate for the power absorbed by the unit.
- No adaptors, multiple outlet sockets and/or extension cables are permitted to connect the unit to the electric mains.
- An omnipolar switch shall be provided for connection to mains, as required by the current safety regulations.
- The use of any power-operated component implies observance of a few basic rules, for example:
  - do not touch the unit with wet or damp parts of the body and/or with

bare feet;

- do not pull electric cables;
- do not leave the equipment exposed to weather (rain, sun, etc.) unless expressly required to do so;
- do not allow children or inexperienced persons to use equipment;

- The unit input cable shall not be replaced by the user.

In case of damage to the cable, switch off the unit and contact qualified personnel to replace.

When the unit is out of use for some time the electric switch supplying all the power-driven components in the system (i.e. pumps, burner, etc.) should be switched off.

3b) FIRING WITH GAS, LIGHT OIL OR OTHER FUELS

GENERAL

- The burner shall be installed by qualified personnel and in compliance with regulations and provisions in force; wrong installation can cause injuries to people and animals, or damage to property, for which the manufacturer cannot be held liable.
- Before installation, it is recommended that all the fuel supply system pipes be carefully cleaned inside, to remove foreign matter that might impair the burner operation.
- Before the burner is commissioned, qualified personnel should inspect the following:

a the fuel supply system, for proper sealing;

b the fuel flow rate, to make sure that it has been set based on the firing rate required of the burner;

c the burner firing system, to make sure that it is supplied for the designed fuel type;

d the fuel supply pressure, to make sure that it is included in the range shown on the rating plate;

e the fuel supply system, to make sure that the system dimensions are adequate to the burner firing rate, and that the system is equipped with all the safety and control devices required by the regulations in force.

- When the burner is to remain idle for some time, the fuel supply tap or taps should be closed.

SPECIAL INSTRUCTIONS FOR USING GAS

Have qualified personnel inspect the installation to ensure that:

a the gas delivery line and train are in compliance with the regulations and provisions in force;

b all gas connections are tight;

c the boiler room ventilation openings are such that they ensure the air supply flow required by the current regulations, and in any case are sufficient for proper combustion.

- Do not use gas pipes to earth electrical equipment.
- Never leave the burner connected when not in use. Always shut the gas valve off.
- In case of prolonged absence of the user, the main gas delivery valve to the burner should be shut off.

Precautions if you can smell gas

a do not operate electric switches, the telephone, or any other item likely to generate sparks;

b immediately open doors and windows to create an air flow to purge the room;

c close the gas valves;

d contact qualified personnel.

- Do not obstruct the ventilation openings of the room where gas appliances are installed, to avoid dangerous conditions such as the development of toxic or explosive mixtures.

DIRECTIVES AND STANDARDS

Gas burners

European directives

-2009/142/EC (Gas Directive)
-2014/35/UE (Low Tension Directive)
-2014/30/UE (Electromagnetic compatibility Directive)
-2006/42/EC (Machinery Directive)

Harmonized standards

-UNI EN 676 (Automatic forced draught burners for gaseous fuels)
-EN 55014-1 (Electromagnetic compatibility- Requirements for house hold appliances, electric tools and similar apparatus)
-EN 60204-1:2006 (Safety of machinery – Electrical equipment of machines.)
-CEI EN 60335-1 (Specification for safety of household and similar electrical appliances);
-CEI EN 60335-2-102 (Household and similar electrical appliances. Safety. Particular requirements for gas, oil and solid-fuel burning appliances having electrical connections).
-UNI EN ISO 12100:2010 (Safety of machinery - General principles for design - Risk assessment and risk reduction);

Light oil burners

European directives

-2014/35/UE (Low Tension Directive)
-2014/30/UE (Electromagnetic compatibility Directive)
-2006/42/EC (Machinery Directive)

Harmonized standards

-UNI EN 267-2011(Automatic forced draught burners for liquid fuels)
-EN 55014-1 (Electromagnetic compatibility- Requirements for house hold appliances, electric tools and similar apparatus)
-EN 60204-1:2006 (Safety of machinery – Electrical equipment of machines.)
-CEI EN 60335-1 (Specification for safety of household and similar electrical appliances);
-CEI EN 60335-2-102 (Household and similar electrical appliances. Safety. Particular requirements for gas, oil and solid-fuel burning appliances having electrical connections).
-UNI EN ISO 12100:2010 (Safety of machinery - General principles for design - Risk assessment and risk reduction);

National Standard

-UNI 7824 (Atomizing burners of the monobloc type. Characteristics and test methods)

Heavy oil burners

European Directives

-2014/35/UE (Low Tension Directive)
-2014/30/UE (Electromagnetic compatibility Directive)
-2006/42/EC (Machinery Directive)

Harmonized standards

-UNI EN 267(Automatic forced draught burners for liquid fuels)
-EN 55014-1 (Electromagnetic compatibility- Requirements for house hold appliances, electric tools and similar apparatus)
-EN 60204-1:2006 (Safety of machinery – Electrical equipment of machines.)
-CEI EN 60335-1 (Specification for safety of household and similar electrical appliances);
-CEI EN 60335-2-102 (Household and similar electrical appliances. Safety. Particular requirements for gas, oil and solid-fuel burning appliances having electrical connections).
-UNI EN ISO 12100:2010 (Safety of machinery - General principles for design - Risk assessment and risk reduction);

Norme nazionali / National Standard

-UNI 7824 (Atomizing burners of the monobloc type. Characteristics and test methods.

Gas - Light oil burners

European Directives

-2009/142/EC (Gas Directive)
-2014/35/UE (Low Tension Directive)
-2014/30/UE (Electromagnetic compatibility Directive)
-2006/42/EC (Machinery Directive)

Harmonized standards

-UNI EN 676 (Automatic forced draught burners for gaseous fuels)
-UNI EN 267(Automatic forced draught burners for liquid fuels)
-EN 55014-1 (Electromagnetic compatibility- Requirements for house hold appliances, electric tools and similar apparatus)

-EN 60204-1:2006 (Safety of machinery – Electrical equipment of machines.)
-CEI EN 60335-1 (Specification for safety of household and similar electrical appliances);
-CEI EN 60335-2-102 (Household and similar electrical appliances. Safety. Particular requirements for gas, oil and solid-fuel burning appliances having electrical connections).
-UNI EN ISO 12100:2010 (Safety of machinery - General principles for design - Risk assessment and risk reduction);

Norme nazionali / National Standard

-UNI 7824 (Atomizing burners of the monobloc type. Characteristics and test methods.

Gas - Heavy oil burners

European directives:

-2009/142/EC (Gas Directive)
-2014/35/UE (Low Tension Directive)
-2014/30/UE (Electromagnetic compatibility Directive)
-2006/42/EC (Machinery Directive)

Harmonized standards

-UNI EN 676 (Automatic forced draught burners for gaseous fuels)
-EN 55014-1 (Electromagnetic compatibility- Requirements for house hold appliances, electric tools and similar apparatus)
-EN 60204-1:2006 (Safety of machinery – Electrical equipment of machines.)
-CEI EN 60335-1 (Specification for safety of household and similar electrical appliances);
-CEI EN 60335-2-102 (Household and similar electrical appliances. Safety. Particular requirements for gas, oil and solid-fuel burning appliances having electrical connections).
-UNI EN ISO 12100:2010 (Safety of machinery - General principles for design - Risk assessment and risk reduction);

National Standard

- UNI 7824 (Atomizing burners of the monobloc type. Characteristics and test methods.

Industrial burners

European directives

-2009/142/EC (Gas Directive)
-2014/35/UE (Low Tension Directive)
-2014/30/UE (Electromagnetic compatibility Directive)
-2006/42/EC (Machinery Directive)

Harmonized standards

-EN 55014-1 (Electromagnetic compatibility- Requirements for house hold appliances, electric tools and similar apparatus)
-EN 746-2 (Industrial thermoprocessing equipment - Part 2: Safety requirements for combustion and fuel handling systems)
-UNI EN ISO 12100:2010 (Safety of machinery - General principles for design - Risk assessment and risk reduction);
-EN 60204-1:2006 (Safety of machinery – Electrical equipment of machines.)
-EN 60335-2 (Electrical equipment of non-electric appliances for household and similar purposes. Safety requirements)

Burner data plate

For the following information, please refer to the data plate:

- burner type and burner model: must be reported in any communication with the supplier
- burner ID (serial number): must be reported in any communication with the supplier
- date of production (year and month)
- information about fuel type and network pressure

Type	--
Model	--
Year	--
S.Number	--
Output	--
Oil Flow	--
Fuel	--
Category	--
Gas Pressure	--
Viscosity	--
El.Supply	--
El.Consump.	--
Fan Motor	--
Protection	--
Drwaing n°	--
P.I.N.	--

SYMBOLS USED

WARNING! Failure to observe the warning may result in irreparable damage to the unit or damage to the environment

DANGER! Failure to observe the warning may result in serious injuries or death.

WARNING! Failure to observe the warning may result in electric shock with lethal consequences

Figures, illustrations and images used in this manual may differ in appearance from the actual product.

GENERAL FEATURES

This series of industrial burners is designed for all those applications that require big-sized air fans or air-flue heat exchangers to be installed in sound-proof areas to reduce noise. They can be provided with built-in or separately-mounted control panel (console or wall-mounted.

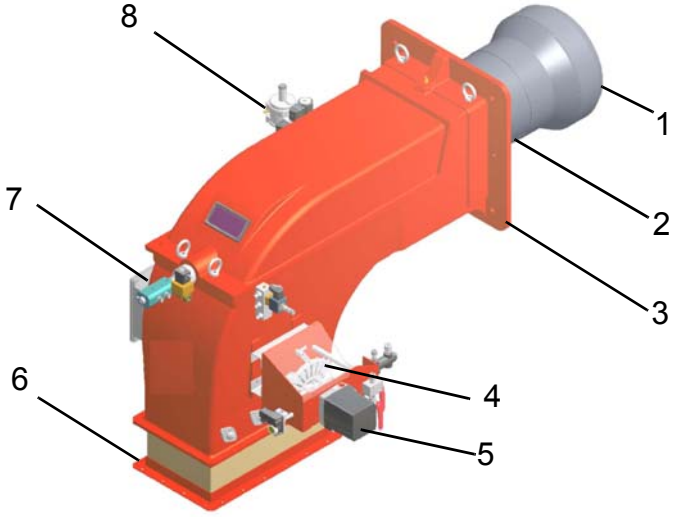

Fig. 1

1 Combustion head
2 Blast tube
3 Burner flange
4 Adjusting cam
5 Actuator
6 Air inlet flange
7 Oil gun
8 Pilot gas train

The fuel coming from the supply line, is pushed by the pump to the nozzle and then into the combustion chamber, where the mixture between fuel and air takes place and consequently the flame.

In the burners, the mixture bertween fuel and air, to perform clean and efficient combustion, is activated by atomisation of oil into very small particles. This process is achieved making pressurised oil passing through the nozzle.

The pump main function is to transfer oil from the tank to the nozzle in the desired quantity and pressure. To adjust this pressure, pumps are provided with a pressure regulator (except for some models for which a separate regulating valve is provided). Other pumps are provided with two pressure regulators: one for the high and one for low pressure (in double-stage systems with one nozzle).

In the double-stage burners, the electric actuator (5), that moves the air damper, allows the optimisation of the gas flue values, as to get an efficient combustion. The position of the combustion head determines the burner's output. The air (comburent) and fuel (light oil) are forced into the combustion chamber, as to let the flame light up.

How to choose the burner

To check if the burner is suitable for the boiler to which it must be installled, the following parameters are needed:

- fuel
- furnace input, in kW or kcal/h (kW = kcal/h / 860);
- boiler type;
- combustione head type (reverse flame or three phase)'
- temperature or pressure of the thermal carrier fluid
- Comburent air temperature
- Air duct positioning
- Pressure in the combustion chamber
- Elevation (altitude) of burner installation
- Gas train (only for gas burners)
- Pumping unit (only for light-oil or heavy-oil burners)
- Air fan

- Bilt-in or separated control panel
- backpressure (data are available on the boiler ID plate or in the user's manual).

Burners provided with built-in control panel are designed for IP40 index of protection. For other values of IP, please contact the CIB UNIGAS Technical Dpt.

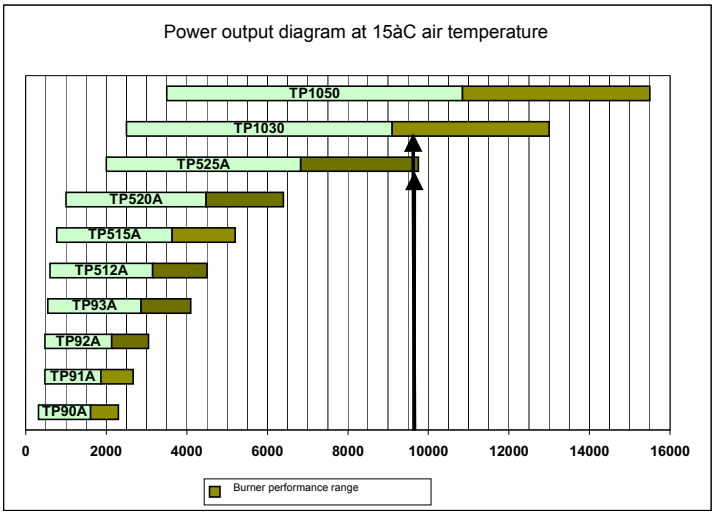

Data requested:

- furnace input;
- air temperature
- altitude
- generator pressure or temperature

Example:

- furnace input: 9600kW
- air temperature: 15°C
- altitude: 0m

Fig. 2

See the diagram in Fig. 2, as to find the burners that better suite the power range requested in the exmple (9600kW). Once the models are founded out, the choice regards technical and economical features. Technical features can be summarised in a higher modulation ratio (fewer start-ups, less consumption, fewer swigings in the generator temperature and pressure values.

Burner model identification

Burners are identified by burner type and model. Burner model identification is described as follows.

Type **TG1030** Model	**G.**	**PR.**	**S.**	***.**	**G.**
(1)	(2)	(3)	(4)	(5)	(6)

(1) BURNER TYPE	**TG1030 - TG1050 - TG1080**
(2) FUEL	G - light oil
(3) OPERATION	PR - Progressive MD - Fully-modulating
(4) BLAST TUBE	S - standard
(5) DESTINATION COUNTRY	* - see data plate
(6) BURNER VERSION	G - Remote control panel and junction box E - Only junction box Y - Special

Specifications

Note: Output values are valid for comburent air temperature lower than 50°C.

		TG1030	TG1050	TG1080
Output	min. -max. kW	2550 - 13300	3500 - 15500	4500 - 19000
Fuel		Light oil	Light oil	Light oil
Oil viscosity	°cSt @ 40 °C	2 - 7.4	2 - 7.4	2 - 7.4
Oil density	kg/m^3	840	840	840
Light oil rate	min.-max. kg/h	215 - 1121	295 - 1307	379 - 1602
Power supply		400V 3Na.c. 50Hz	400V 3Na.c. 50Hz	400V 3Na.c. 50Hz
Fan power	kW	see fan ID plate		
Total power (fan motor excluded)	kW	6	6	6
Pump motor	kW	5.5	5.5	5.5
Pilot pump motor (version with light oil pilot onbly)(	kW	0.75	0.75	0.75
Index of protection		IP40	IP40	IP40
Operation		Progressive - Fully modulating	Progressive - Fully modulating	Progressive - Fully modulating
Operating temperature	°C	-10 / +50	-10 / +50	-10 / +50
Storage temperature	°C	-20 / +60	-20 / +60	-20 / +60
Working service *		Intermittent	Intermittent	Intermittent

*** NOTE ON THE BURNER WORKING SERVICE:** for safety reasons, one controlled shutdown must be performed every 24 hours of continuous operation.

⚠	WARNING: the pilot operates with natural gas or LPG and its working service is intermittent. For further information, see paragraph “Pilot gas train”.

Overall dimensions (mm)

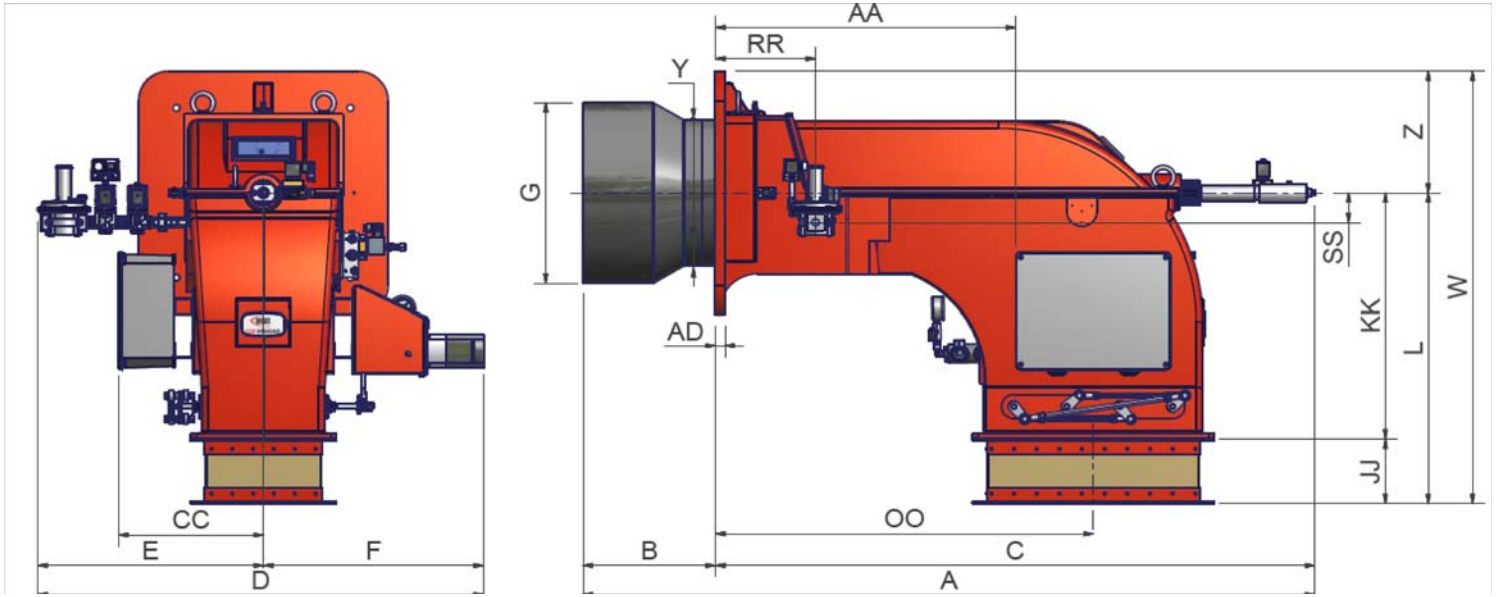

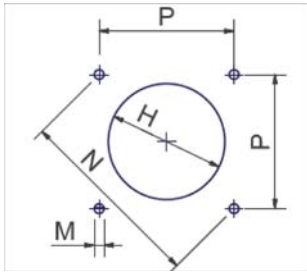

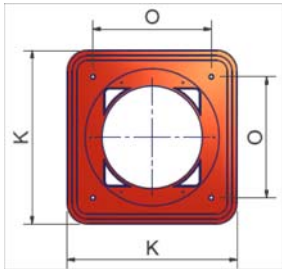

Boiler recommended drilling template and burner flange

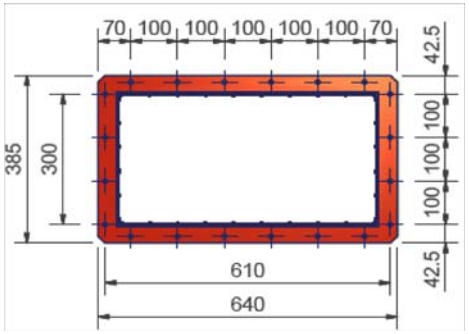

Air inlet flange

	A(*S)	A(*L)	AA	AD	B(*S)	B (*L)	C	CC	D	E	F	G	H	JJ	K	KK	L	M	N	O	OO	P	RR	SS	W	Y	Z
TG1030	1936	2480	795	25	350	544	1586	383	1180	598	582	489	539	175	660	665	840	M16	651	460	1000	460	265	80	1170	405	330
TG1050	x	x	795	25	x	x	1586	383	1180	599	583	x	539	175	660	665	840	M16	651	460	1000	460	265	80	1170	x	330
TG1080	1970	x	795	25	384	x	1586	383	1180	599	583	671	731	175	660	665	840	M16	651	460	1000	460	265	80	1170	412	330

*S: measure referred to burner provided with standard blast tube

*L: measure referred to burner provided with extended blast tube

MOUNTING AND CONNECTING THE BURNER

Packing

The burners are dispatched in wooden packages whose dimensions are:

2270mm x 1720mm x 1410mm (L x P x H)

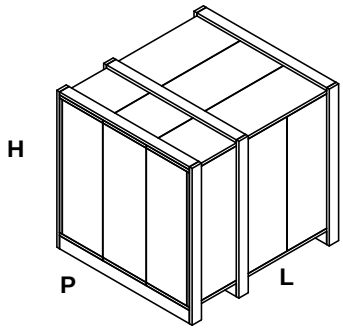

Packing cases of this kind are affected by humidity and are not suitable for stacking. In each packing case, you will find:

- burner;
- control panel (if required);
- pumping unit (if required);
- flexible hoses;
- gasket to be inserted between the burner and the boiler;
- envelope containing documents.

To get rid of the burner's packing, follow the procedures laid down by current laws on disposal of materials.

Handling the burner

⚠	**ATTENTION! the lfting and moving operations must be carried out by specialised and trained personnel. If these operations are not carried out perfectly, there is the residual risk of the burner to overturn and fall down.**
	As for moving the burner, use means suited for the weight to sustain (see paragraph "Technical specifications").

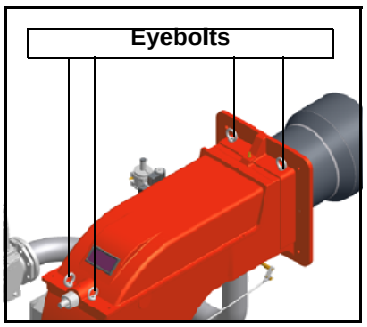

The burner is provided with eyebolts, for handling operations.

The burner is designed to work positioned according to the picture below. For different installations, please contact the Technical Department.

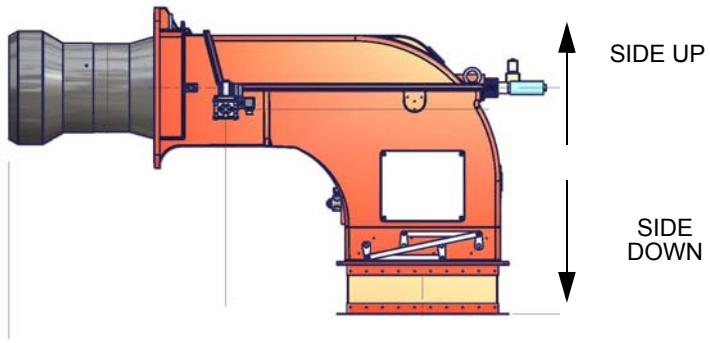

Fitting the burner to the boiler

1 To perform the installation, it is necessary to drill the boiler door as described on paragraph "Overall dimensions";
2 screw the studbolts (5) on the boiler door, according to the drilling plate (see paragraph "Overall dimensions");
3 move the burner towards the boiler: lift the burner by means of the eyebolts placed on its top side;
4 remove the balst tube, by loosening the three screws beside the burner flange;
5 place the the ceramic fibre plait on the burner flange;
6 replace the blast tube: before fastening completely the screws, avoid any misalignement between the blast tube axis and the combustion head axis;
7 install the burner to the boiler;
8 fix the burner to the stud bolts, by means of the fixing nuts, according to Fig. 3.
9 After fitting the burner to the boiler, ensure that the gap between the blast tube and the refractory lining is sealed with appropriate insulating material (ceramic fibre cord or refractory cement).

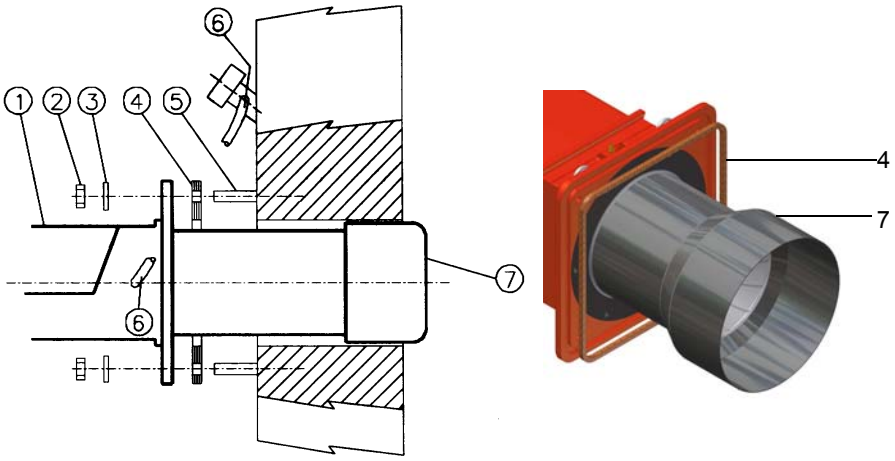

Fig. 3

Keys

1 Burner
2 Fixing nut
3 Washer
4 Ceramic fibre plait
5 Stud bolt
7 Blast tube

Fan installation

Pay attention when designing the air duct: dimensioning must be performed according to the flow rate, the temperature, the distance between the fan and the burner and according to the fan features as well.

⚠	**ATTENTION!** The bellows unit provided is made of canvas and is provided with blocking spacers to avoid breaking it during installation: **first** place the bellows unit between flanges, **then** remove the spacers. Canvas has to be stretched after the installation, but not stressed.

Matching the burner to the boiler

The burners described in this manual have been tested with combustion chambers that comply with EN676 regulation and whose dimensions are described in the diagram . In case the burner must be coupled with boilers with a combustion chamber smaller in diameter or shorter than those described in the diagram, please contact the supplier, to verify that a correct matching is possible, with respect of the application involved. To correctly match the burner to the boiler verify the necessary input and the pressure in combustion chamber are included in the burner performance curve; otherwise the choice of the burner must be revised consulting the burner manufacturer. To choose the blast tube lenght follow the instructions of the boiler manufacturer. In absence of these consider the following:

- Cast-iron boilers, three pass flue boilers (with the first pass in the rear part): the blast tube must protrude no more than 100 mm into the combustion chamber.
- Pressurised boilers with flame reversal: in this case the blast tube must penetrate at least 50 - 100 mm into combustion chamber in respect to the tube bundle plate.

The length of the blast tubes does not always allow this requirement to be met, and thus it may be necessary to use a suitably-sized spacer to move the burner backwards or to design a blast tube tha suites the utilisation (please, contact the manifacturer).

Pilot gas train

Execute the pilot gas train connections as follows:

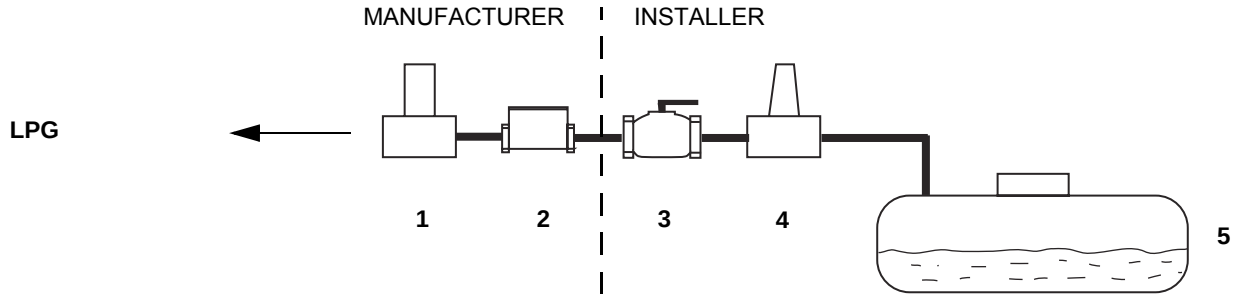

Legenda

1 Gas valve
2 Gas filter
3 Manual cutoff valve
4 Pressure reducer
5 Tank

Gas supply: LPG
Gas pressure: 100 mbar

Once the gas train in installed, execute the electrical connections for all its items (gas valves group, pressure switch).

⚠	**ATTENTION:** once the gas train is mounted according to the diagram on picture above, the gas proving test mus be performed, according to the procedure set by the laws in force.

Ligh oil pilot (option)

Pump Suntec AS47 A

Viscosity	2 ÷ 12 mm²/s (cSt)
Fuel temperature	0 ÷ 60 °C
Maximum inlet pressure	2 bar
Minimum inlet pressure	- 0.45 bar to avoid gasing
Maximum Return pressure	2 bar
Maximum speed	3600 rpm

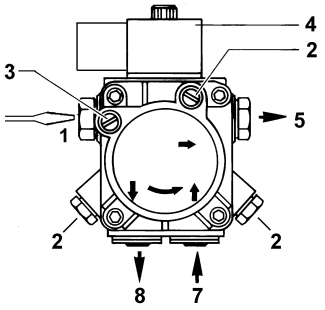

Oil circuit

The fuel is pushed into the pump 1 to the nozzle 3 at the delivery pressure set by the pressure governor. The solenoid valve 2 stops the fuel immission into the combustion chamber. The fuel flow rate that is not burnt goes back to the tank through the return circuit. The spill-back nozzle is feeded at constant pressure, while the return line pressure is adjusted by means of the pressure governor controlled by an actuator coupled to an adjusting cam. The fuel amount to be burnt is adjusted by means of the burner actuator according to the adjustments set (see prevoius paragraph).

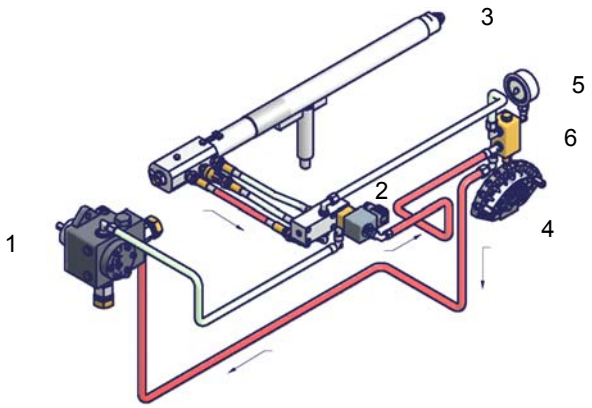

Fig. 4 - Stand-by

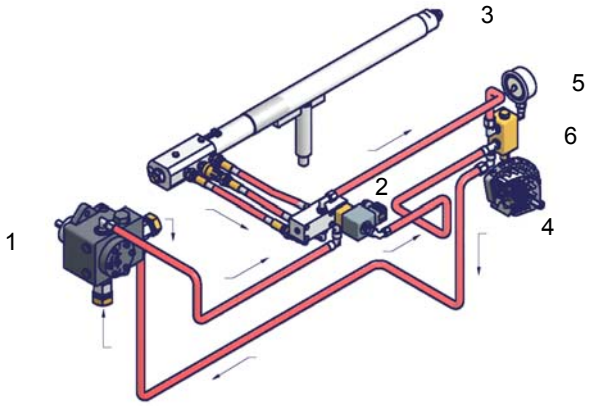

Fig. 5 - Prepurge

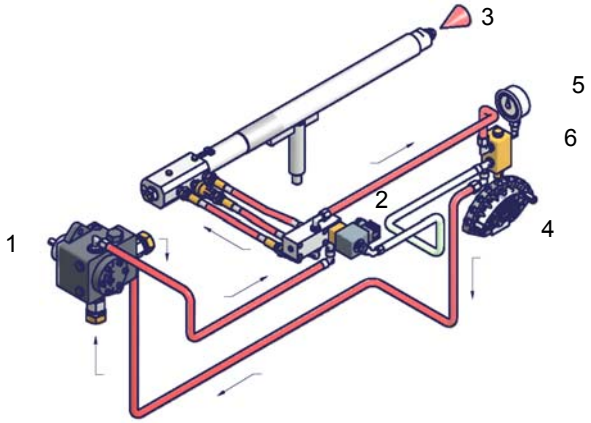

Fig. 6 - Low flame

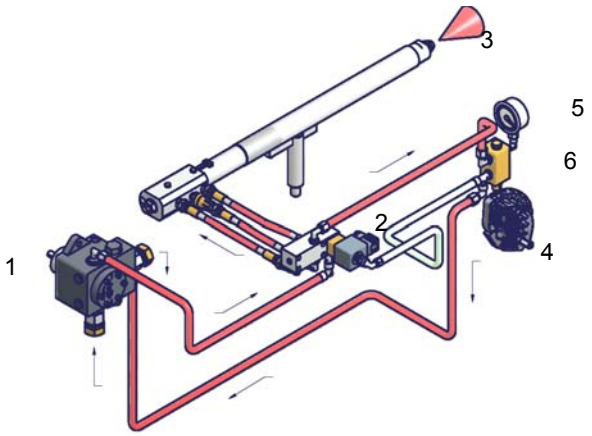

Fig. 7 - High flame

Key

1 Oil pump
2 Oil solenoid valve
3 Nozzle
4 Adjusting cam
5 Pressure gauge
6 Pressure governor

Hydraulic diagrams for light oil supplying circuits

Fig. 8 - Gravity circuit

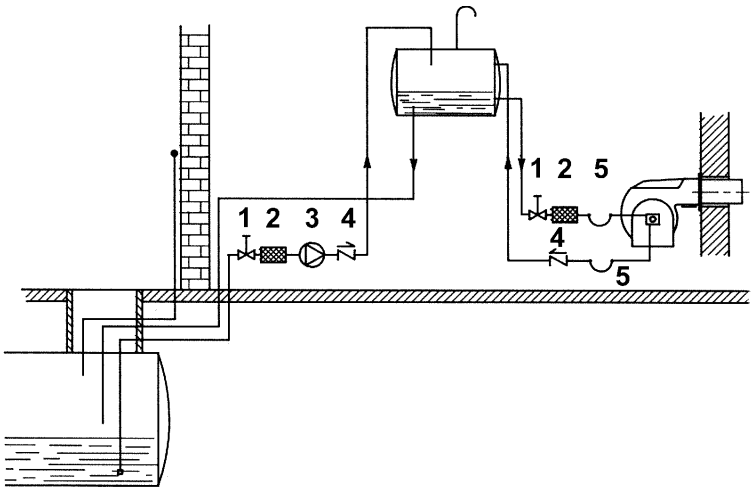

Fig. 9 - Ring circuit

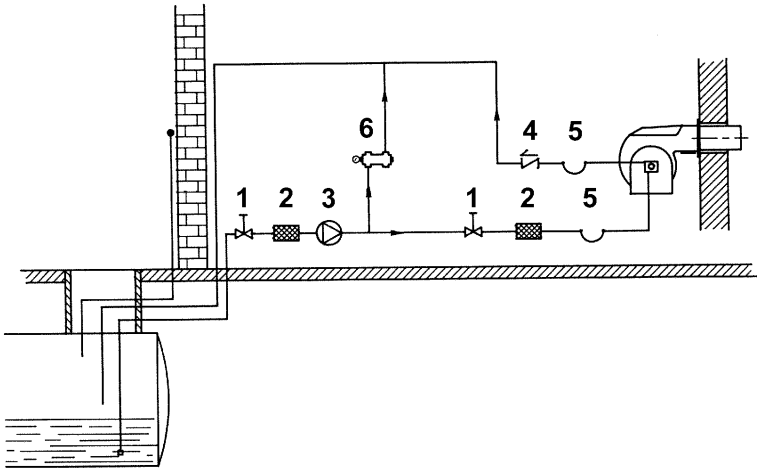

Fig. 10 - Suction circuit

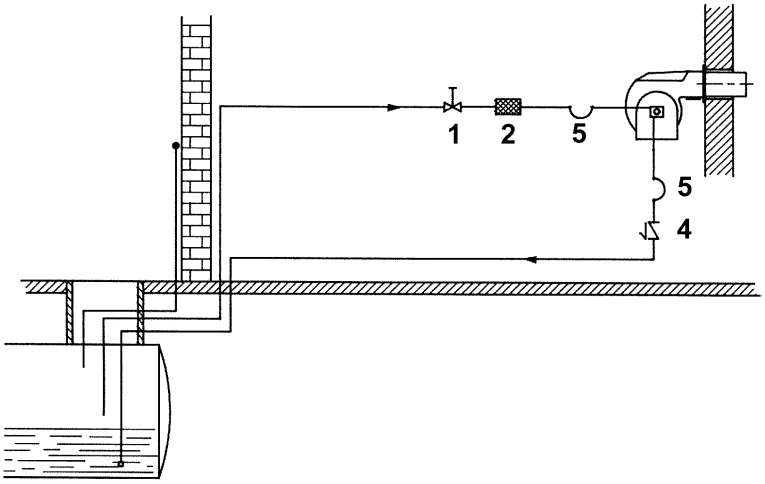

Key

1 Manual valve
2 Light oil filter
3 Light oil feeding pump
4 One way valve
5 Flexible hoses
6 Relief valve

NOTE: in plants where gravity or ring feed systems are provided, install an automatic interception device (see n. 4-Fig. 11).

Installation diagram of light oil pipes

⚠ **PLEASE READ CAREFULLY THE "WARNINGS" CHAPTER AT THE BEGINNING OF THIS MANUAL.**

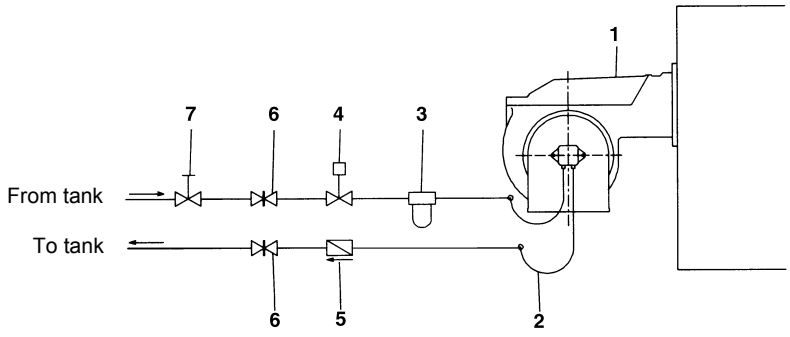

Fig. 11 - Double-pipe system

The burner is supplied with filter and flexible hoses, all the parts upstream the filter and downstream the return flexible hose, must be installed by the customer. As far as the hoses connection, see the related paragraph.

Key

1 Burner
2 Flexible hoses (fitted)
3 Light oil filter (fitted)
4 Automatic interceptor (*)
5 One-way valve (*)
6 Gate valve
7 Quick-closing gate-valve (outside the tank or boiler rooms)

(*) Only for installations with gravity, siphon or forced circulation feed systems. If the device installed is a solenoid valve, a timer must be installed to delay the valve closing.
The direct connection of the device without a timer may cause pump breaks.

Hydraulic system

The pumps that are used can be installed both into single-pipe and double-pipe systems.

Single-pipe system: a single pipe drives the oil from the tank to the pump's inlet. Then, from the pump, the pressurised oil is driven to the nozzle: a part comes out from the nozzle while the othe part goes back to the pump. In this system, the by-pass pulg, if provided, must be removed and the optional return port, on the pump's body, must be sealed by steel plug and washer.

Double-pipe system: as for the single pipe system, a pipe that connects the tank to the pump's inlet is used besides another pipe that connects the pum's return port to the tank, as well. The excess of oil goes back to the tank: this installation can be considered self-bleeding. If provided, the inside by-pass plug must be installed to avoid air and fuel passing through the pump.

Burners come out from the factory provided for double-stage systems. They can be suited for single-pipe system (recommended in the case of gravity feed) as decribed before.

The bypass plug inserted beween high pressure and shaft seal is only intended to change the pump rotation, check the presence of this plug with a 4 mm Allen key in the pressure outlet of the pump.

To change from a 1-pipe system to a 2-pipe-system, insert the by-pass plug **G** (as for ccw-rotation- referring to the pump shaft).

Caution: Changing the direction of rotation, all connections on top and side are reversed.

Key

A Oil under suction
B Oil under pressure
1 To the pressure adjustment valve
2 Vacuum gauge port
3 Pressure gauge port
5 Suction (from the tank)
6 By-pass plug inserted

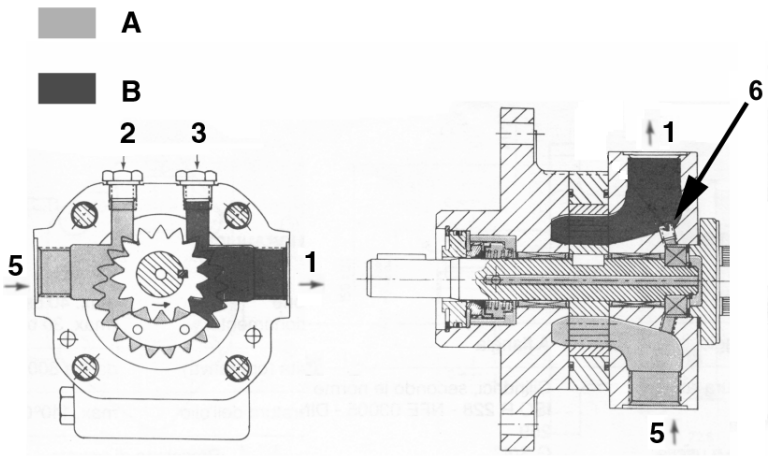

Bleed

Bleeding in two-pipe operation is automatic : it is assured by a bleed flat on the piston. In one-pipe operation, the plug of a pressure gauge port must be loosened until the air is evacuated from the system.

Suntec T..	
Viscosity	3 - 75 cSt
Oil temperature	0 - 150 °C
Minimum suction pressure	- 0.45 bar to prevent gasing
Maximum suction pressure	5 bar
Rated speed	3600 rpm max.

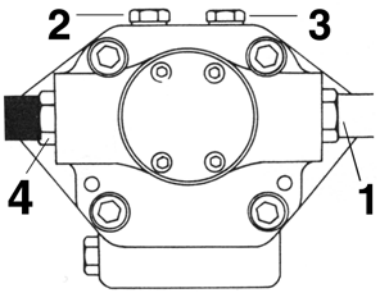

Key

1 Inlet G3/4
2 Pressure gauge port G1/4
3 Vacuum gauge port to measure the inlet vacuum G1/4
4 To pressure adjusting valve G3/4

"Note: pump with “C” rotation.

Suntec TV Pressure governor

Pressure adjustment

Remove cap-nut 1 and the gasket 2, unscrew the lock nut 4. To increase pressure, twist adjusting screw 3 clockwise.

To decrease the pressure, twist screw counterclockwise. Tight the lock nut 4, refit the gasket 2 and the cap nut 1.

Key

1 Cap nut
2 Gasket
3 Adjusting screw
4 Lock nut
5 Gasket

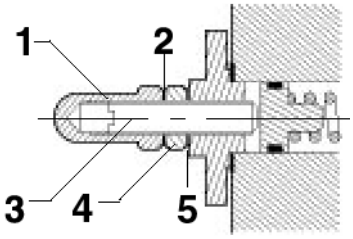

Fig. 12

Connecting the burner to the oil pumping unit Suntec T+TV

Follow the scheme in the picture below to connect the burner to the oil pumping unit. The pump sends the oil coming from the tank to the burner. The pressure governor makes the oil reach the nozzle at the required pressure, while the excess of oil goes back to the tank. To change the delivery pressure act on the VRM adjusting screw of the pressure governor, reading the oil pressure at the nozzle (put a pressure gauge on the oil lance manifold).

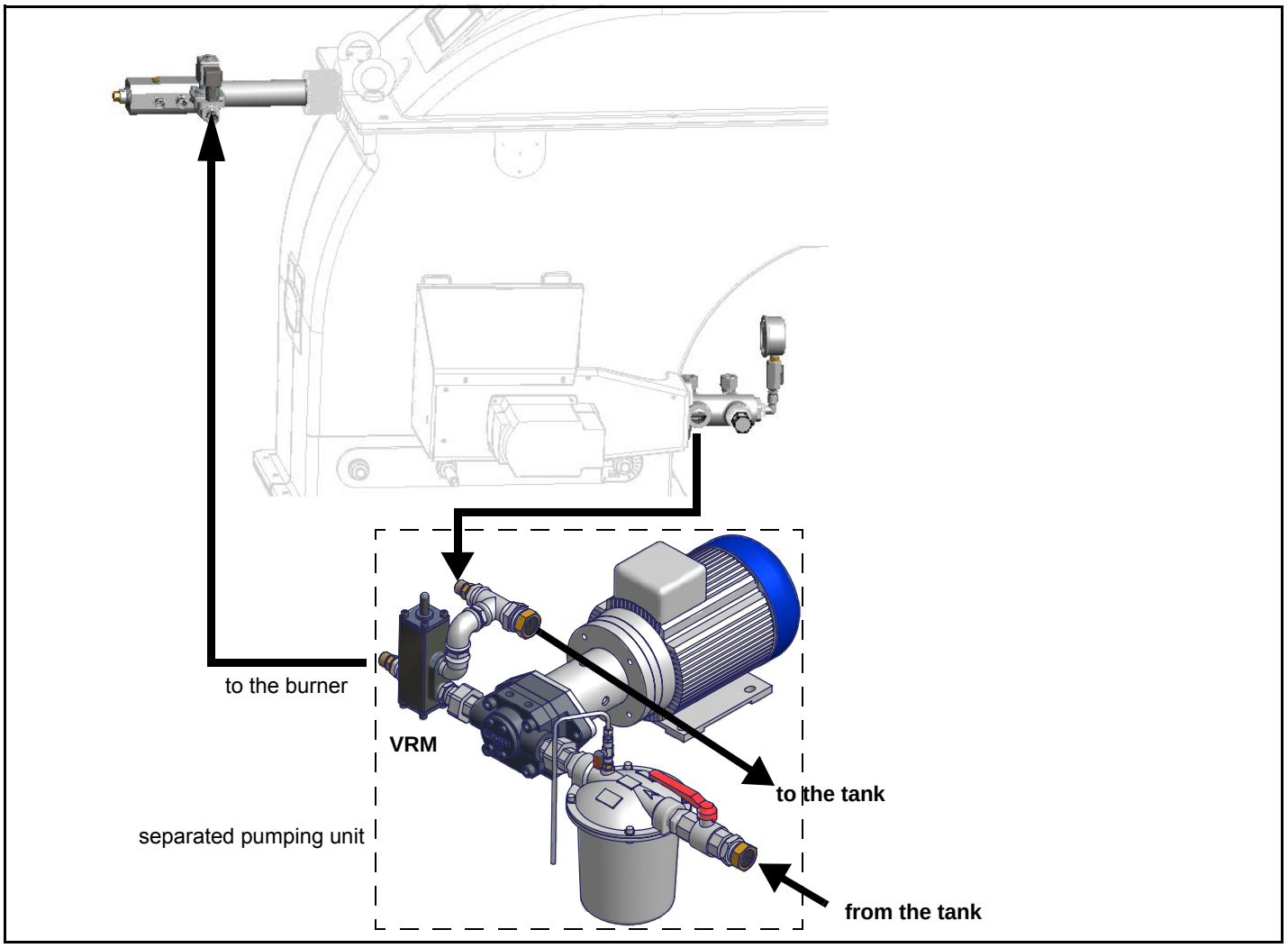

CAUTION: caps are not sealing type but used for shipment only. The flexible hoses between the pump and the burner are the ones called (on the label) “Oil high pressure flexible hose”. The flexible hose called “Oil low pressure flexible hose” is the one to be connected upstraem the oil filter.

About the use of fuel pumps

- Make sure that the by-pass plug is not used in a single pipe installation, because the fuel unit will not function properly and damage to the pump and burner motor could result.
- Do not use fuel with additives to avoid the possible formation over time of compounds which may deposit between the gear teeth, thus obstructing them.
- After filling the tank, wait before starting the burner. This will give any suspended impurities time to deposit on the bottom of the tank, thus avoiding the possibility that they might be sucked into the pump.
- On initial commissioning a "dry" operation is foreseen for a considerable length of time (for example, when there is a long suction line to bleed). To avoid damages inject some lubrication oil into the vacuum inlet.
- Care must be taken when installing the pump not to force the pump shaft along its axis or laterally to avoid excessive wear on the joint, noise and overloading the gears.
- Pipes should not contain air pockets. Rapid attachment joint should therefore be avoided and threaded or mechanical seal junctions preferred. Junction threads, elbow joints and couplings should be sealed with removable sg component. The number of junctions should be kept to a minimum as they are a possible source of leakage.
- Do not use PTFE tape on the suction and return line pipes to avoid the possibility that particles enter circulation. These could deposit on the pump filter or the nozzle, reducing efficiency. Always use O-Rings or mechanical seal (copper or aluminium gaskets) junctions if possible.
- An external filter should always be installed in the suction line upstream of the fuel unit.

Electrical connections

⚠	**RESPECT THE BASIC SAFETY RULES. MAKE SURE OF THE CONNECTION TO THE EARTHING SYSTEM. DO NOT REVERSE THE PHASE AND NEUTRAL CONNECTIONS. FIT A DIFFERENTIAL THERMAL MAGNET SWITCH ADEQUATE FOR CONNECTION TO THE MAINS. STRICTLY OBSERVE THE DATA PLATE.**

As far as electrical connections, see the “ELECTRICAL WIRING DIAGRAMS” chapter.

Fan and pump motors rotation

Once the burner electrical connection is accomplished, remember to check the rotation of the motors.

Motors must rotate in the direction showed on their casing. In the event of wrong rotation, reverse the three-phase supply and check again the motor rotation.

ADJUSTING AIR AND LIGHT OIL FLOW RATE

The light oil flow rate can be adjusted choosing a by-pass nozzle that suits the boiler/utilisation output and setting the delivery and return pressure values according to the ones quoted on the chart below and the following diagrams (as far as reading the pressure values, see next paragraphs).

NOZZLE	NOZZLE SUPPLY PRESSURE bar	HIGH FLAME RETURN PRESSURE bar	LOW FLAME RETURN PRESSURE bar
BERGONZO B/C	25	18-21	7 (recommended)
UNIGAS M3/G3	25	18-21	7 (recommended)

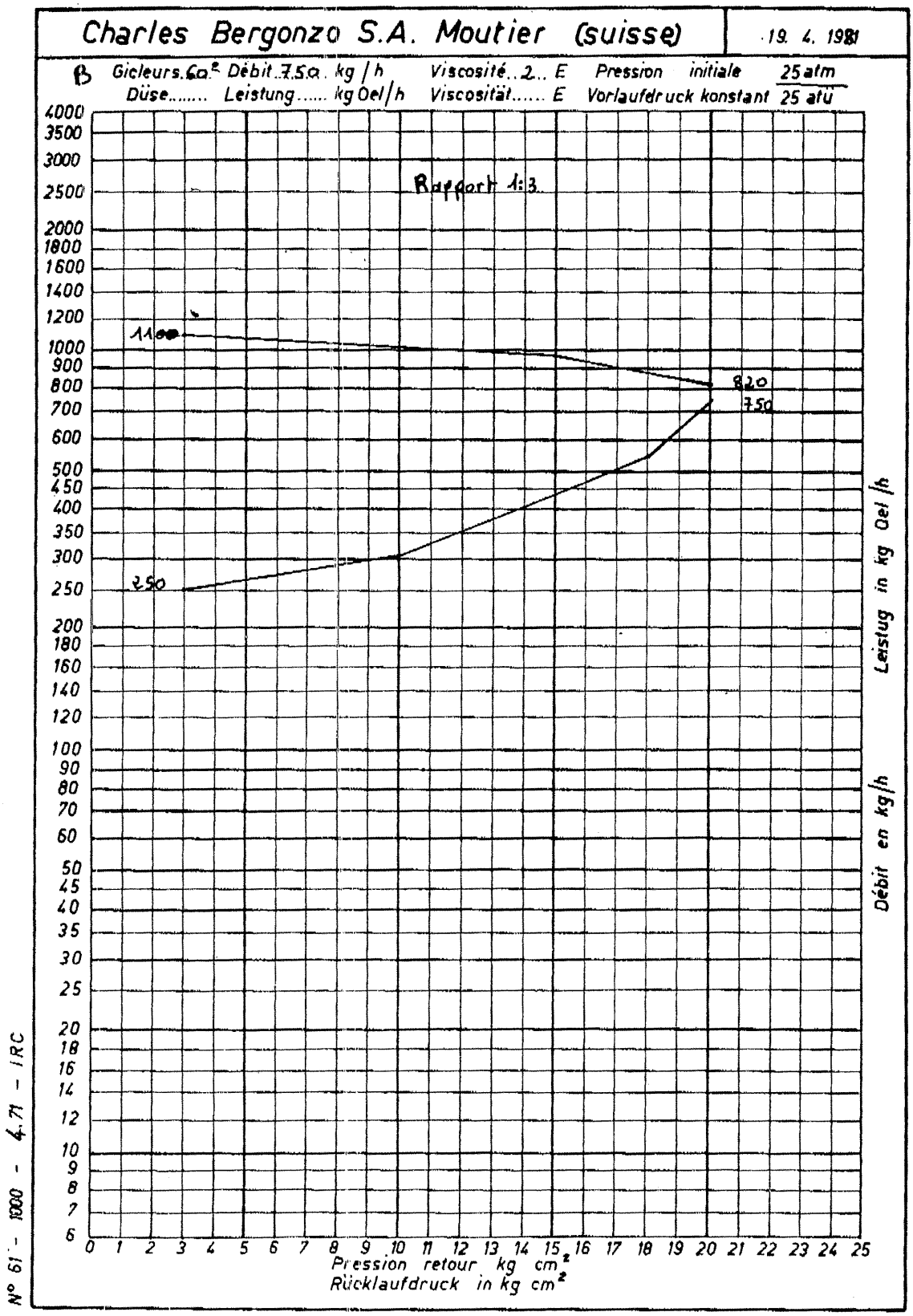

Fig. 13

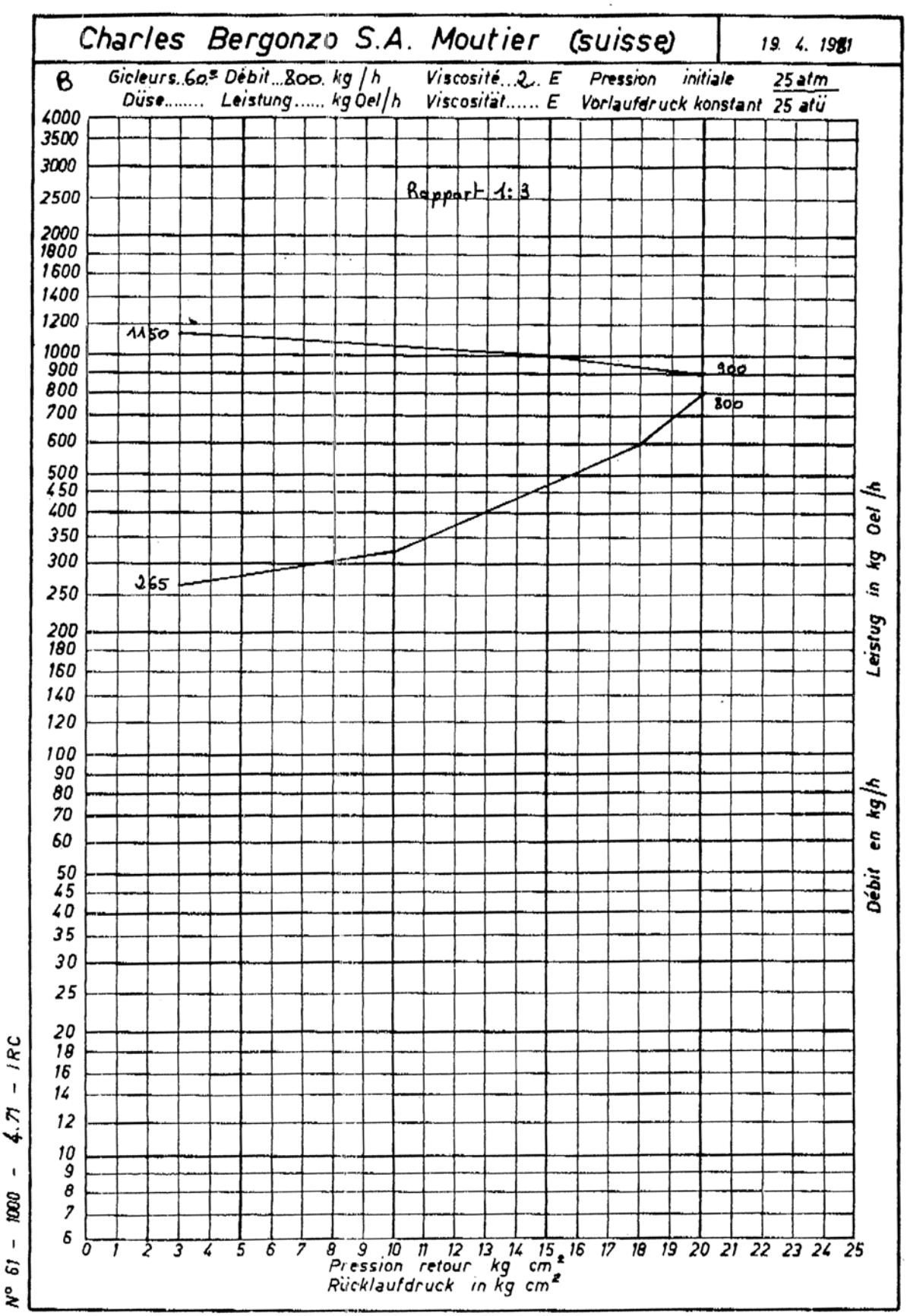
Charles Bergonzo S.A. Moutier (suisse)
19. 4. 1981
B
Gicleurs..60° Débit...800. kg / h
Viscosité...2. E
Pression initiale 25 atm
Düse..... Leistung..... kg Oel/h
Viscosität..... E
Vorlaufdruck konstant 25 atü
Rapport 1:3
1150
900
800
265
Leistug in kg Oel/h
Débit en kg/h
Pression retour kg cm²
Rücklaufdruck in kg cm²
N° 61 - 1000 - 4.71 - IRC

Fig. 14

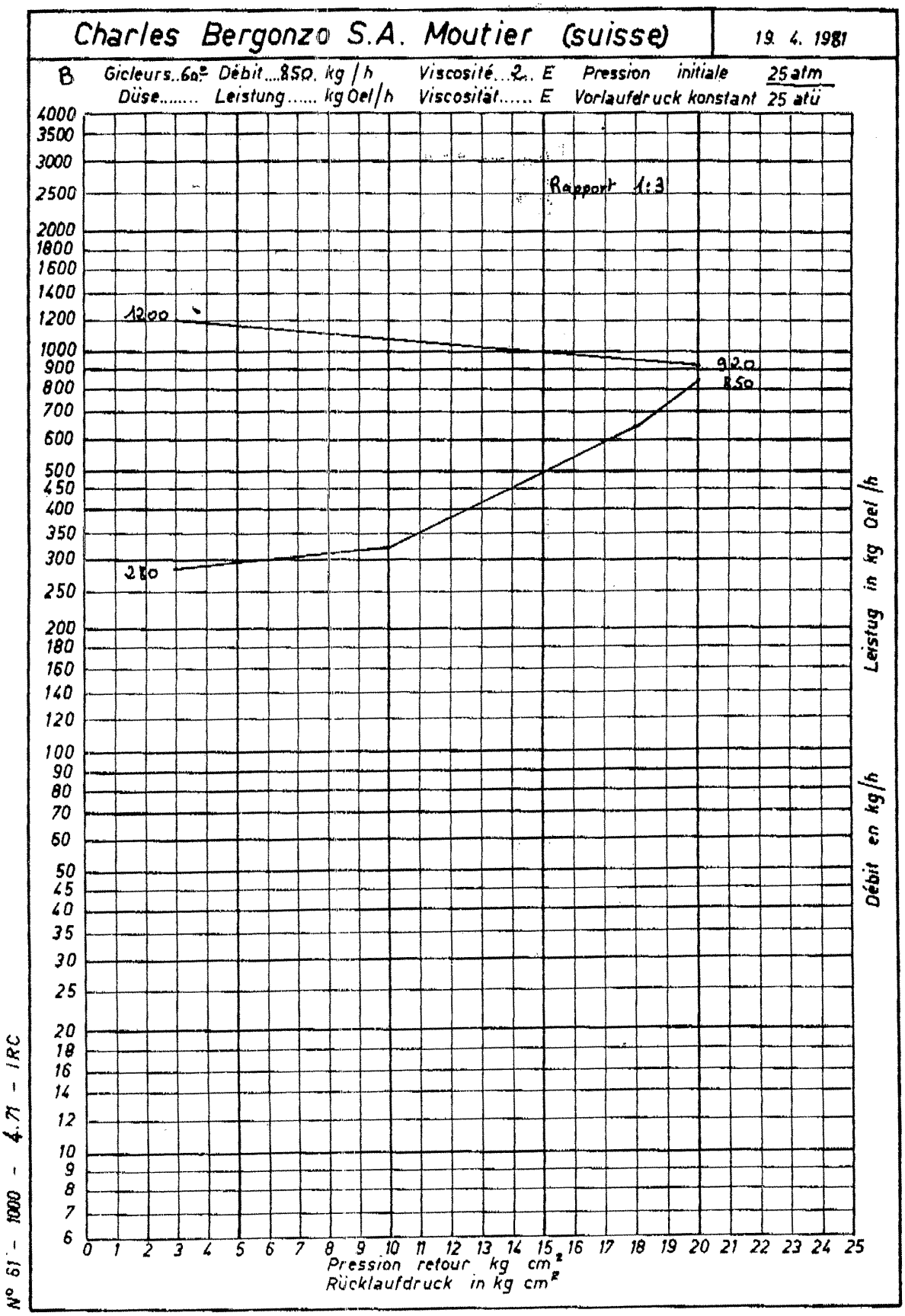
Charles Bergonzo S.A. Moutier (suisse)
19. 4. 1981
B Gicleurs..6a.. Débit...850. kg/h Viscosité...2.. E Pression initiale 25 atm
Düse..... Leistung..... kg Oel/h Viscosität..... E Vorlaufdruck konstant 25 atü
Rapport 1:3
1200
920
850
280
Leistug in kg Oel/h
Débit en kg/h
Pression retour kg cm²
Rücklaufdruck in kg cm²
N° 61 - 1000 - 4.71 - IRC

Fig. 15

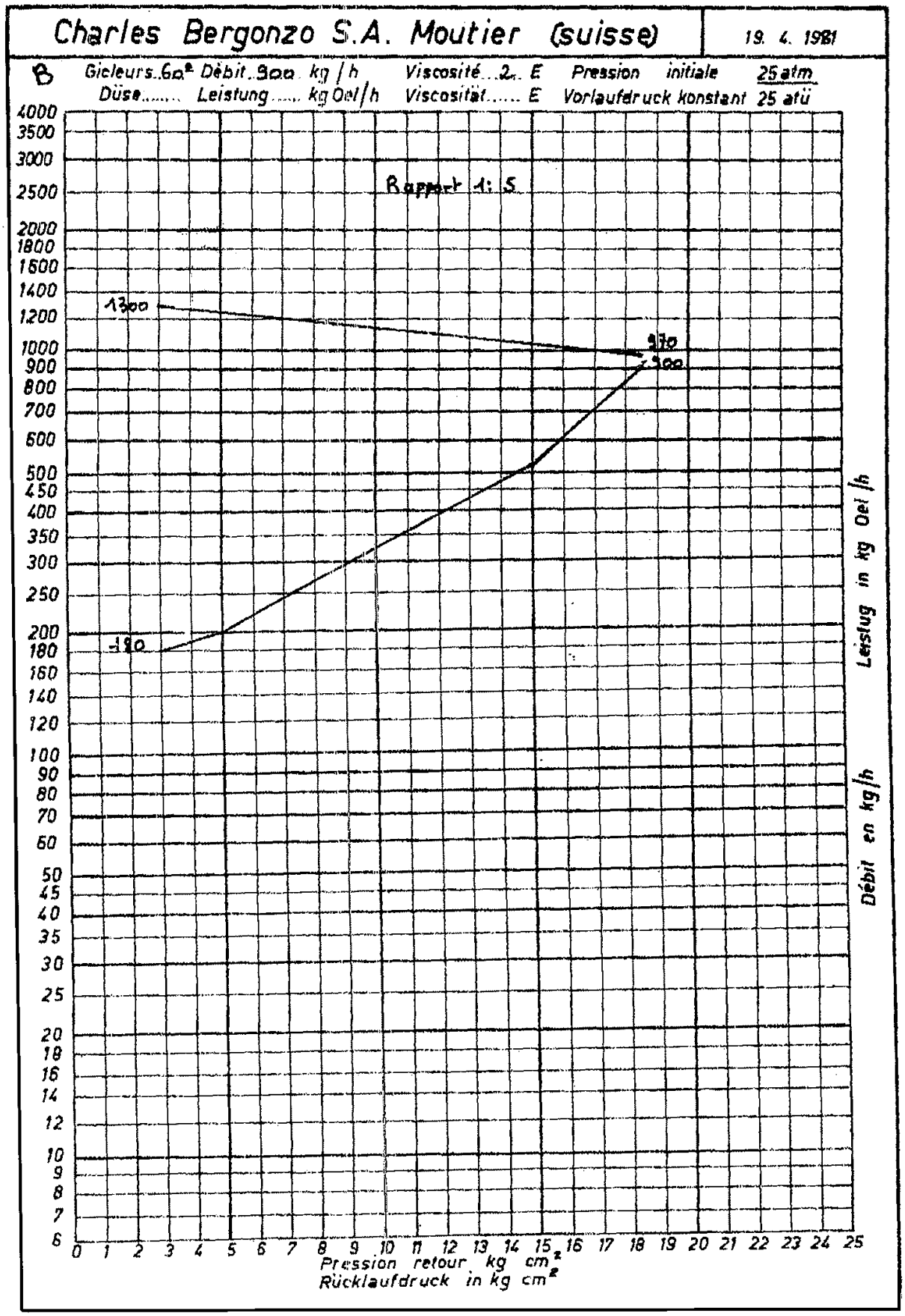
Charles Bergonzo S.A. Moutier (suisse)
19. 4. 1981
B
Gicleurs 60° Débit 900 kg/h
Viscosité 2 E
Pression initiale 25 atm
Düse
Leistung kg Oel/h
Viscosität E
Vorlaufdruck konstant 25 atü
Rapport 1:5
1300
970
900
180
Leistug in kg Oel/h
Débit en kg/h
Pression retour kg cm²
Rücklaufdruck in kg cm²

Fig. 16

ADJUSTMENTS

⚠	***ATTENTION:*** **before starting the burner up, be sure that the manual cutoff valves are open and check that the pressure upstream the gas train complies the value quoted on paragraph "Technical specifications". Be sure that the mains switch is closed.**
	Before starting up the burner, make sure that the return pipe to the tank is not obstructed. Any obstruction would cause the pump seal to break.
	.***ATTENTION:*** During commissioning operations, do not let the burner operate with insufficient air flow (danger of formation of carbon monoxide); if this should happen, make the fuel decrease slowly until the normal combustion values are achieved.

⚠	**IMPORTANT! the combustion air excess must be adjusted according to the in the following chart:**

Recommended combustion parameters		
Fuel	***Recommended (%) CO_2***	***Recommended (%) O_2***
Light oil	11.5 ÷ 13	2.9 ÷ 4.9

⚠	**Prior to start up the burner, make sure that the return pipe to the tank is not obstructed. Any obstruction would cause the pump seal to break.**

Adjusting the gas pilot

To change the pilot gas valve flow rate, proceed as follows:

1 remove the protection on the bottom of the valve, moving it counterclockwise (see next picture);

2 rotate clockwise the nut 1 as shown in to close the valve or counterclockwise to open.

To perform a finest adjustment, act directly on the pressure stabiliser as follows (see next picture):

3 remove the cap **T**: to increase the gas pressure at the outlet use a screwdriver on the screw **TR** as shown in picture. Screw to increase the pressure, unscrew to decrease; once the regulation is performed, replace cap **T**.

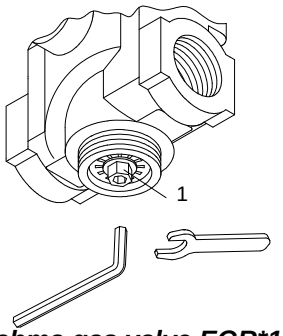

Brahma gas valve EGR*12

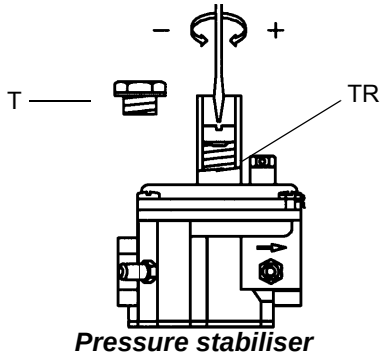

Pressure stabiliser

Adjustments - brief description

Adjust the air and fuel flow rates at the maximum output ("high flame") first, by means of the air damper and the adjusting cam respectively.

- Check that the combustion parameters are in the suggested limits.
- Check the nozzle flow rate.
- Then, adjust the combustion values corresponding to the points between maximum and minimum: set the shape of the adjusting cam foil. The adjusting cam sets the air/fuel ratio in those points, regulating the opening-closing of the fuel governor.
- Set, now, the low flame output, acting on the low flame microswitch of the actuator in order to avoid the low flame output increasing too much or that the flues temperature gets too low to cause condensation in the chimney.

Adjustment procedure

1 Check the fan motor rotation (see page 17).

2 With the electrical panel open, prime the oil pump acting directly on the related **CP** contactor (see next picture): check the pump motor rotation and keep pressed for some seconds until the oil circuit is charged;

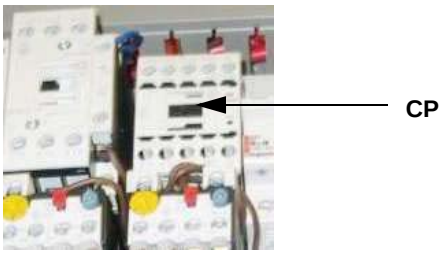

3 bleed the air from the **M** pressure gauge port (Fig. 17) by loosing the cap without removing it, then release the contactor and screw the cap again.

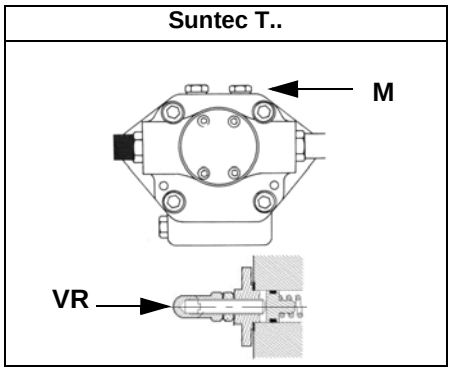

Fig. 17

1 Before starting the burner up, drive the high flame actuator microswitch matching the low flame one (in order to let the burner operates at the lowest output) to achieve safely the high flame stage;

2 cam IV (stroke limitation cam) must be set a little higher than the cam III to limit the output during the first seconds the flame appears;

NOTE: cam IV must shift according to cam III (it increases or decreases accordingly).

3 Turn the burner on by means of its main switch: if the burner locks press the RESET button on the control panel - see chapter "OPERATION" on page 27.

4 start the burner up by means of the thermostat series and wait until the pre-purge time comes to an end and the burner starts up;

5 drive the burner to high flame stage, by means fo the thermostat **TAB** (high/low flame thermostat - see Wiring diagrams), as far as fully-modulating burners, see related paragraph..

6 Then move progressively the microswitch to higher values until it reaches the high flame position; always check the combustion values and eventually adjust the oil pressure (see next step).

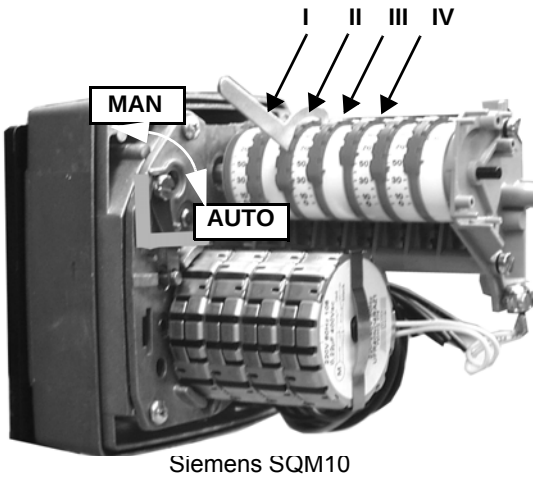

Siemens SQM10

Actuator cams

I	High flame
II	Stand-by and Ignition
III	Low flame
IV	Stroke limitation

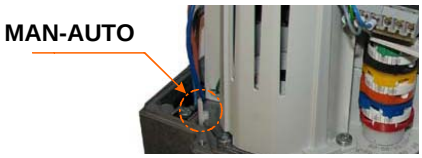

Siemens SQM40

7 The nozzle supply pressure is already factory-set and must not be changed. Only if necessary, adjust the supply pressure as follows (see related paragraph); insert a pressure gauge into the port shown on Fig. 18 and act on on the pump adjusting screw **VR**

(see Fig. 17 and page 15) as to get the nozzle pressure at 25bar (Fluidics/bergonzo nozzles - see diagram on page 22).

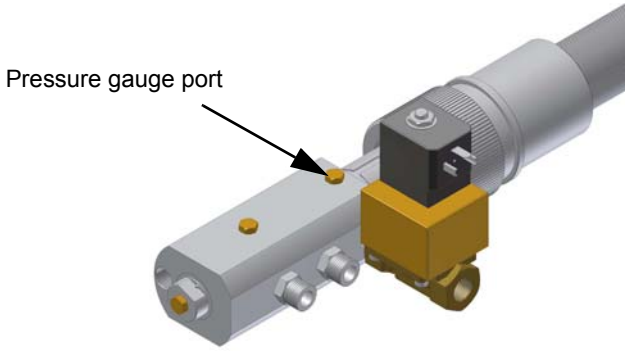

Fig. 18

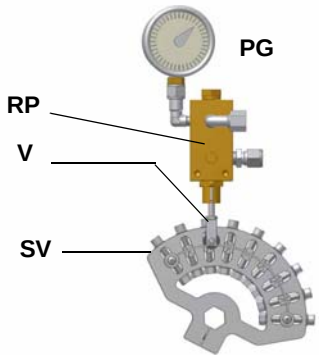

Fig. 19

8 In order to get the maximum oil flow rate, adjust the pressure (reading its value on the **PG** pressure gauge): always checking the combustion parameters, the adjustment is to be performed by means of the **SV** adjusting cam screw (see picture above) when the cam has reached the high flame position.

9 To adjust the **air flow rate in the high flame stage**, loose the **RA** nut and screw **VRA** as to get the desired air flow rate: moving the rod **TR** towards the air damper shaft, the air damper opens and consequently the air flow rate increases, moving it far from the shaft the air damper closes and the air flow rate decreases.

Note: once the procedure is perfomed, be sure that the blocking nut **RA** is fasten. Do not change the position of the air damper rods.

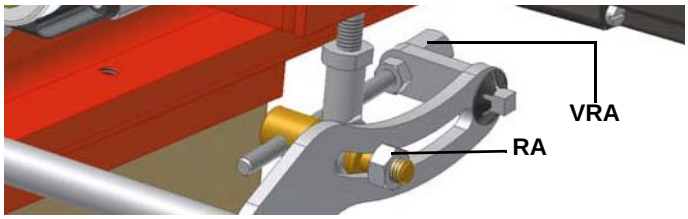

Only if necessary, change the combusiton head position: to let the burner operate at a lower output, loose the **VB** screw and move progressively back the combustion head towards the MIN position, by turning clockwise the **VRT** ring nut. Fasten **VB** screw when the adjustment is accomplished.

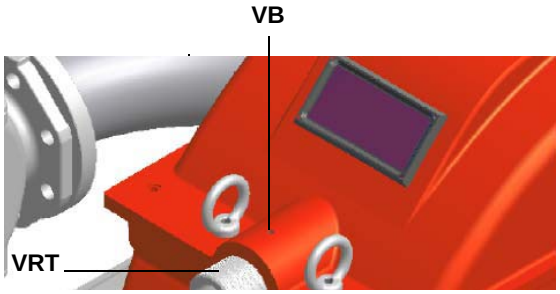

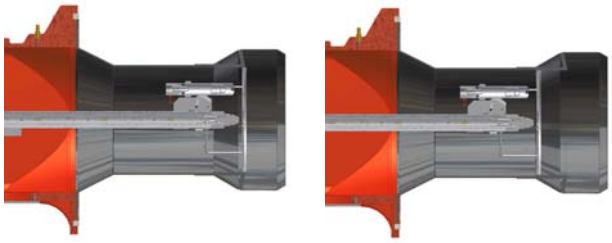

"MAX"head position "MIN" head position

Attention! if it is necessary to change the head position, repeat the air and gas adjustments described above.

10 the air and oil rate are now adjusted at the maximum output stage, go on with the point to point adjustement on the **SV** (Fig. 19) adjusting cam as to reach the minimum output point.

11 As for the point-to-point regulation in order to set the cam foil shape, move the low flame microswitch (cam III) a little lower than the maximum position (90°);

12 set the **TAB** thermostat to the minimum in order that the actuator moves progressively towards the low flame position;

13 move cam III (low flame) towards the minimum to move the actuator towards the low flame until the two bearings find the adjusting screw that refers to a lower position: screw **V** to increase the rate, unscrew to decrease, in order to get the pressure as showed on diagrams on page 16, according to the nozzle provided and the requested rate.

14 Move again cam III towards the minimum to meet the next screw on the adjusting cam and repeat the previous step; go on this way as to reach the desired low flame point.

NOTE: remembern that cam IV must shift according to cam III (see step 2).

15 The low flame position must never match the ignition position that is why cam **III** must be set 20°- 30° more than the ignition position.

16 Turn the burner off; then start it up again. If the adjustment is not correct, repeat the previous steps.

Now adjust the air pressure switch (see next paragraph).

Calibration of air pressure switch

To calibrate the air pressure switch, proceed as follows:

- Remove the transparent plastic cap.
- Once air and fuel setting have been accomplished, startup the burner.
- During the pre-purge phase o the operation, turn slowly the adjusting ring nut **VR** in the clockwise direction (to increase the adjusting pressure) until the burner lockout, then read the value on the pressure switch scale and set it to a value reduced by 15%.
- Repeat the ignition cycle of the burner and check it runs properly.
- Refit the transparent plastic cover on the pressure switch.

Maximum oil pressure switch

The oil pressure switch on the return line, checks that the pressure does not exceed a default value. This value must not be higher than the maximum acceptable pressure on the return line (this value is reported on the specification table). A pressure change on the return line could affect the combustion parameters: for this reason, the pressure switch must be set, say, at 20% over the pressure recorded during the combustion adjustment. The factory setting is 4 bar.

It is recommended to verify that the combustion parameters are within the range of acceptable values even against a pressure variation that gets close to the limit of the pressure switch

This check should be carried out along the whole range of the burner output.

In case of inacceptable values, reduce from 20% to 15% the overpressure; later on, repeat the adjustments described above.

Minimum oil pressure switch (when provided)

The minimum oil pressure switch on the inlet line, checks that the pressure does not drop below a default value. The pressure switch must be set, say, at 10% under the pressure at the nozzle.

Oil pressure switch adjustment

Follow the below instruction, according to the pressure switch installed.

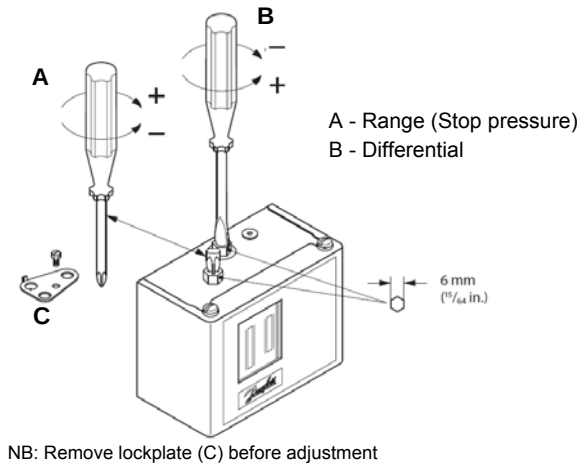 NB: Remove lockplate (C) before adjustment	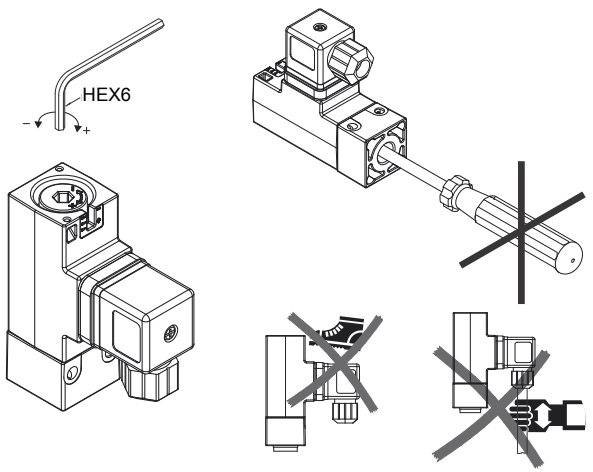
Danfoss KP..	**Trafag Picostat 9B4..**

Fully modulating burners

To adjust the fully-modulating burners, use the **CMF** switch on the burner control panel (see next picture), instead of the **TAB** thermostat as described on the previous paragraphs about the progressive burners. Go on adjusting the burner as described before, paying attention to use the CMF switch intead of **TAB**.

The **CMF** position sets the oprating stages: to drive the burner to the high-flame stage, set CMF=1; to drive it to the low-flame stage, set CMF=2.

To move the adjusting cam set CMF=1 or 2 and then CMF=0.

CMF = 0 stop at the current position
CMF = 1 high flame operation
CMF = 2 low flame operation
CMF = 3 automatic operation

For further details, see the burner modulator reference guide.

PART II: OPERATION

LIMITATIONS OF USE

THE BURNER IS AN APPLIANCE DESIGNED AND CONSTRUCTED TO OPERATE ONLY AFTER BEING CORRECTLY CONNECTED TO A HEAT GENERATOR (E.G. BOILER, HOT AIR GENERATOR, FURNACE, ETC.), ANY OTHER USE IS TO BE CONSIDERED IMPROPER AND THEREFORE DANGEROUS.

THE USER MUST GUARANTEE THE CORRECT FITTING OF THE APPLIANCE, ENTRUSTING THE INSTALLATION OF IT TO QUALIFIED PERSONNEL AND HAVING THE FIRST COMMISSIONING OF IT CARRIED OUT BY A SERVICE CENTRE AUTHORISED BY THE COMPANY MANUFACTURING THE BURNER.

A FUNDAMENTAL FACTOR IN THIS RESPECT IS THE ELECTRICAL CONNECTION TO THE GENERATOR'S CONTROL AND SAFETY UNITS (CONTROL THERMOSTAT, SAFETY, ETC.) WHICH GUARANTEES CORRECT AND SAFE FUNCTIONING OF THE BURNER.

THEREFORE, ANY OPERATION OF THE APPLIANCE MUST BE PREVENTED WHICH DEPARTS FROM THE INSTALLATION OPERATIONS OR WHICH HAPPENS AFTER TOTAL OR PARTIAL TAMPERING WITH THESE (E.G. DISCONNECTION, EVEN PARTIAL, OF THE ELECTRICAL LEADS, OPENING THE GENERATOR DOOR, DISMANTLING OF PART OF THE BURNER).

NEVER OPEN OR DISMANTLE ANY COMPONENT OF THE MACHINE.

OPERATE ONLY THE MAIN SWITCH, WHICH THROUGH ITS EASY ACCESSIBILITY AND RAPIDITY OF OPERATION ALSO FUNCTIONS AS AN EMERGENCY SWITCH, AND ON THE RESET BUTTON.

IN CASE OF A BURNER SHUT-DOWN, RESET THE CONTROL BOX BY MEANS OF THE RESET PUSHBUTTON. IF A SECOND SHUT-DOWN TAKES PLACE, CALL THE TECHNICAL SERVICE, WITHOUT TRYING TO RESET FURTHER.

WARNING: DURING NORMAL OPERATION THE PARTS OF THE BURNER NEAREST TO THE GENERATOR (COUPLING FLANGE) CAN BECOME VERY HOT, AVOID TOUCHING THEM SO AS NOT TO GET BURNT.

OPERATION

⚠	***ATTENTION:*** **before starting the burner up, be sure that the manual cutoff valves are open and check that the pressure upstream the gas train complies the value quoted on paragraph "Technical specifications".**

1 Set to the ON position the main switch on the burner control panel.
2 Check the control box is not in the lockout position; in such a case reset it by the reset pushbutton.
3 Check that the series of thermostats (or pressure switches) enable the burner to operate.
4 The startup sequence begins: the control box ignites the fan and pump motors and energises the ignition transformer as well.
5 At the end of the pre-purge stage, the light oil solenoid valve EVG is energised and the burner is on.
6 The ignition transformer is energized for few seconds after the ignition of the flame (post-ignition time) and at the end of this time is de-energised.
7 After the ignition the actuator moves to the high flame position for some seconds, then the operation begins and the burner switches to high flame or to low flame, according to the plant demand.

PART III: MAINTENANCE

At least once a year carry out the maintenance operations listed below. In the case of seasonal servicing, it is recommended to carry out the maintenance at the end of each heating season; in the case of continuous operation the maintenance is carried out every 6 months.

WARNING: ALL OPERATIONS ON THE BURNER MUST BE CARRIED OUT WITH THE MAINS DISCONNECTED AND THE FUEL MANAUL CUTOFF VALVES CLOSED!

ATTENTION: READ CAREFULLY THE "WARNINGS" CHAPTER AT THE BEGINNIG OF THIS MANUAL.

ROUTINE MAINTENANCE

- Check and clean the ignitor gas filter cartdrige, replace if necessary.
- Check and clean the fuel filter cartdrige, replace if necessary.
- Check and clean the filter inside the light oil pump: filter must be thoroughly cleaned at least once in a season to ensure correct working of the fuel unit. To remove the filter, unscrew the four screws on the cover. When reassemble, make sure that the filter is mounted with the feet toward the pump body. If the gasket between cover and pump housing should be damaged, it must be replaced. An external filter should always be installed in the suction line upstream of the fuel unit.
- Check the fuel hoses for possible leaks.
- Remove, clean and check the combustion head (see Fig. 22).
- Check and clean the ignition electrode on the pilot burner, adjust and, if necessary, replace it (page 30).
- Check and clean the detection photoresistor, adjust and, if necessary, replace it (Fig. 25).
- Remove and clean the fuel nozzle ***(Important:* cleaning must be performed using solvent, not metal tools!*).*** At the end of maintenance operations after the burner reassembly, light the flame and check its shape, replacing the nozzle whenever a questionable flame shape appears. Whenever the burner is used intensely, we recommend preventively replacing the nozzle at the start of each heating season.
- Clean and grease levers and rotating parts.

Maintenance of the governor with filter (ignitor gas train)

Before disassmbling the device, be sure that there is no pressurised gas inside it.

To check the filtering part (1) on threaded bodies (see):

- remove the bottom cover, unscrewing the fixing screws;
- remove the filtering part (1), clean it with water and soap, blow it with compressed air or replace it if necessary;
- reassemble the filtering part in its initial position checking that it is placed in its own slots (see);
- reassemble the bottom cover (3), being sure that the main bolt is centered in the bottom cover slot.

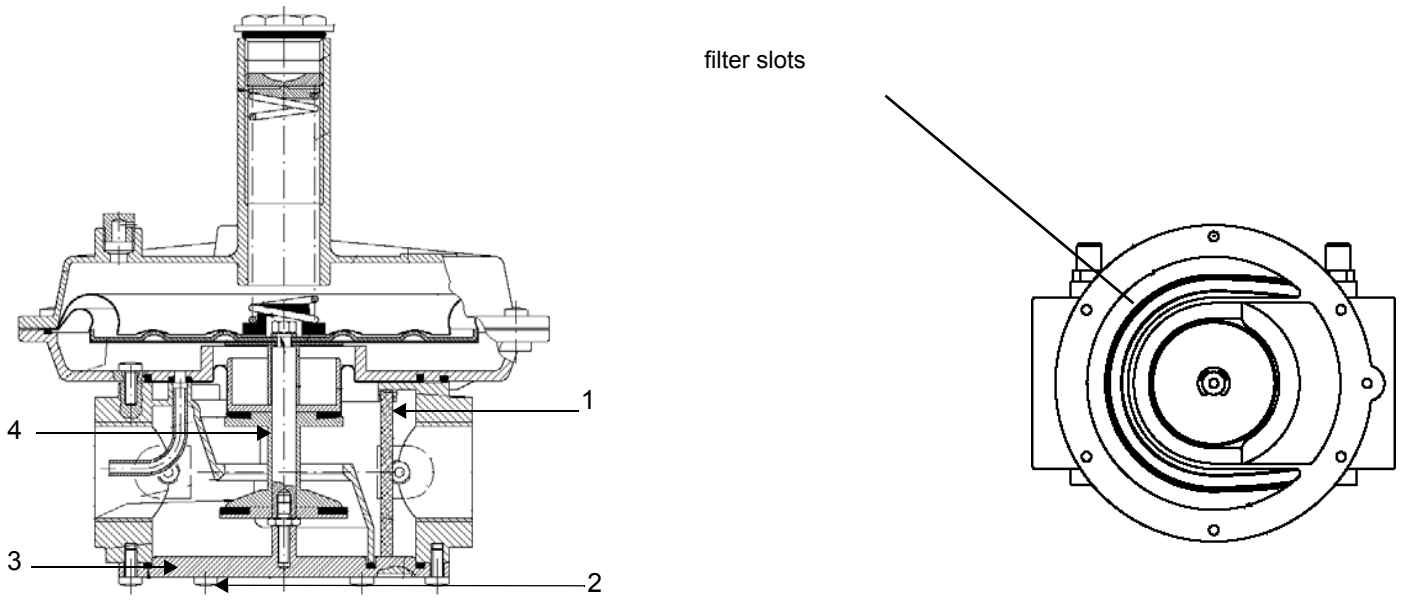

Fig. 20

Light oil filter maintenance

For correct and proper servicing, proceed as follows:

1 shut off fuel in the line section being serviced;
2 unscrew the tray;
3 remove the filter cartridge from its support and wash it with petrol or replace if necessary; check seal O-Ring, replace if necessary;
4 reassemble the tray and restore fuel flow.

Fig. 21

Removing the combustion head

1 Remove the cover **H**.
2 Slide the photoresistance out of its housing.
3 unscrew the revolving connectors (E in Fig. 22) on the fuel pipes (use 2 spanners to avoid loosening the connections attached to the distributor block)loosen the screw VRT to free the threaded rod AR, then screw out the 2 screws V holding the washer R and the screw VRT in position
4 remove the whole assembly as shown in Fig. 22
5 Clean the combustion head by means fo a vacuum cleaner; scrape off the scale by means fo a metallic brush.

Note: to remount the burner, floow the same procedure in the reversed order.

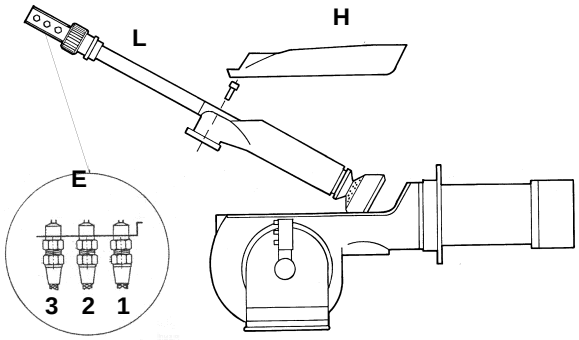

Fig. 22

Key

1 Inlet
2 Return
3 Gun opening
E Oil piping connections
H Cover
L Oil gun

Removing the oil gun

1 Remove the combustion head, as described on the previous paragraph;
2 slacken the screw VB
3 remove the lance with the nozzle holder
4 to replace the combustion head reverse the procedure described above.

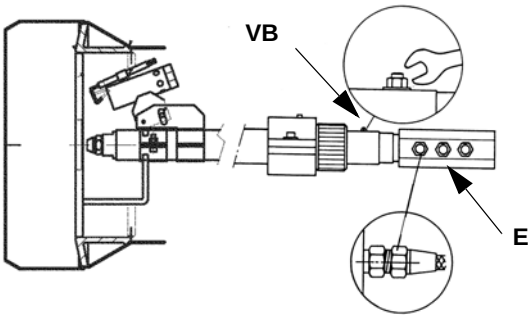

Fig. 23

Electrode position setting

⚠	**ATTENTION:** avoid the ignition electrode to contact metallic parts (blast tube, head, etc.), otherwise the boiler's operation would be compromised. Check the electrode position after any intervention on the combustion head.

To guarantee a good ignition, the masures below (in mm) must be observed (Fig. 24).

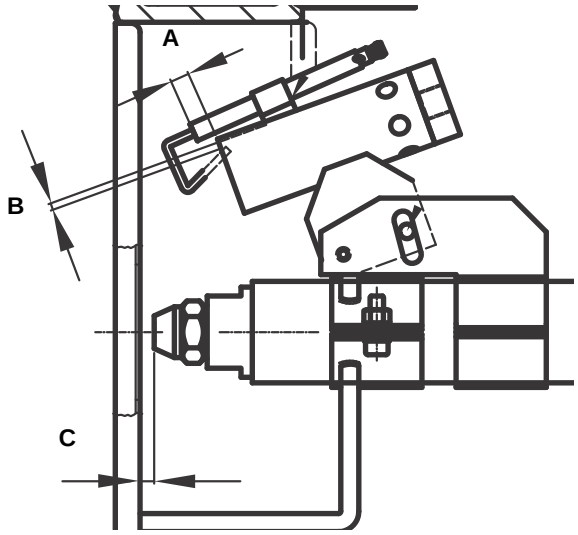

A= 8 mm
B= 3 mm
C= 8 mm

Fig. 24

Replacing the ignition electrode

⚠	**ATTENTION:** avoid the ignition electrode to contact metallic parts (blast tube, head, etc.), otherwise the boiler's operation would be compromised. Check the electrode position after any intervention on the combustion head.

To replace the ignition electrode, proceed as follows:

1 remove the burner cover
2 disconnect the electrode cable
3 remove the combustion head (see par. "Removing the combustion head");
4 loose the screw that fasten the ignition electrode to the burner pilot;
5 remove the electrode and replace it, referring to the values quoted on Fig. 24.

Cleaning and replacing the detection photoresistor

To clean/replace the photoresistive detector, remove it from its slot. To clean the photoresistor, use a clean cloth, not cleaning sprays.

Checking the detection current

To measure the detection signal follow the diagram in Fig. 25.

If the signal is not in the advised range, check the electrical contacts, the cleaning of the combustion head, the position of the photoresistor and if necessary replace it.

Minimum current intensity with flame

LAL25: 8µA

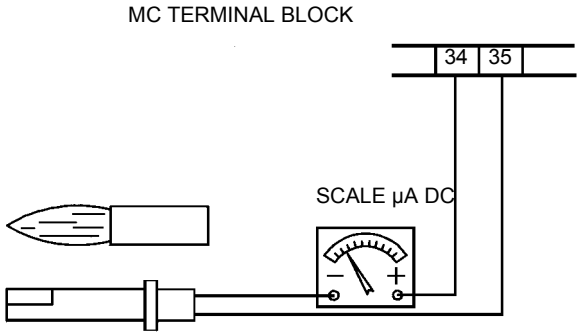

Fig. 25

Seasonal stop

To stop the burner in the seasonal stop, proceed as follows:

1 turn the burner's main switch to 0 (Off position)

2 disconnect the power mains

3 close the fuel cock of the supply line

Burner disposal

In case of disposal, follow the instructions according to the laws in force in your country about the "Disposal of materials".

	THE BURNER DOESN'T START	THE BURNER REPEATS PRE-PURGE	NOISY FUEL PUMP	THE BURNER DOESN'T START AND STOPS	THE BURNER STARTS AND STOPS	THE BURNER DOESN'T SWITCH TO HIGH FLAME	THE BURNER STOPS DURING OPERATION	THE BURNER STOPS AND REPEATS THE CYCLE DURING OPE-RATION
MAIN SWITCH OPEN	●							
LINE FUSE INTERVENTION	●							
MAX. PRESSURE SWITCH FAULT	●							●
FAN THERMAL CUTOUT INTERVENTION	●							
AUXILIARY RELAIS FUSES INTERVENTION	●							
CONTROL BOX FAULT	●	●		●	●		●	
ACTUATOR FAULT						●		
SMOKEY FLAME					●		●	
IGNITION TRANSFORMER FAULT				●				
IGNITION ELECTRODE DIRTY OR BADLY POSITIONED				●				
DIRTY NOZZLE				●			●	
FUEL SOLENOID VALVE DEFECTIVE				●			●	
PHOTORESISTOR DIRTY OR DEFECTIVE					●		●	
HI-LO FLAME THERMOSTAT DEFECTIVE						●		
WRONG POSITION OF ACTUATOR CAMS						●		
FUEL PRESSURE TOO LOW				●				
DIRTY FUEL FILTERS			●	●			●	

WIRING DIAGRAMS

Refer to the attached wiring diagrams.

WARNING

1 - Electrical supply 400V 50Hz 3N a.c.

2 - Do not reverse phase with neutral

3 - Ensure burner is properly earthed

SIEMENS LAL.. CONTROL BOX

Use

- Control and supervision of oil atomization burners
- For burners of medium to high capacity
- For intermittent operation (at least one controlled shutdown every 24 hours)
- Universally applicable for multistage or modulating burners

Housing and plug-in base

- Made of impact-proof and heat-resistance black plastic
- Lockout reset button with viewing window; located behind it:
- Lockout warning lamp
- Lockout indicator coupled to the spindle of the sequence switch and visible in the transparent lockout reset button
- uses easy-to-remember symbols to indicate the type of fault and the point in time lockout occurred

Base and plug-in section of the LAL... are designed such that only burner controls of the LAL... family can be plugged in.

- 24 connection terminals
- Auxiliary terminals «31» and «32»
- 3 earth terminals terminating in a lug for earthing the burner
- 3 neutral conductor terminals prewired to terminal 2
- 14 knockout holes for cable entry by means of cable glands
- 8 at the side
- 6 in the bottom of the base
- 6 lateral threaded knockout holes for cable entry glands Pg11 or M20

Operation

Flame detector and flame simulation test are made automatically during burner off times and the prepurge time «t1». If loss of flame occurs during operation, the burner control will initiate lockout. If automatic repetition of the startup sequence is required, the clearly marked wire link on the plug-in section of the LAL... must be cut away.

Pre-conditions for burner startup

- Burner control is not in the lockout position
- Sequence switch is in its start position (with LAL2 voltage is present at terminals 11 and 12.
- Air damper is closed; end switch «z» for the CLOSED position must feed power from terminal 11 to terminal8.
- Contact of the limit thermostat or pressure switch «W» and the contacts of any other switching devices in the control loop between terminals 4 and 5 must be closed e.g. a control contact for the oil preheater's temperature
- Normally closed contact of the air pressure switch must be closed.

Startup sequence

Start command by «R»:

«R» closes the start control loop between terminals 4 and 5

- The sequence switch starts to run
- Only prepurging, fan motor at terminal 6 receives power
- Pre- and postpurging, fan motor or flue gas fan at terminal 7 receives power on completion of «t7»
- On completion of «t16», the control command for opening the air damper is delivered via terminal 9
- Terminal 8 receives no power during the positioning time
- The sequence switch continues to run only after the air damper has fully closed.

t1 Prepurge time with air damper fully open:

- The correct functioning of the flame supervision circuit is checked during «t1»
- The burner control will initiate lockout if correct functioning is not ensured.

With LAL2:

Shortly after the beginning of «t1», the air pressure switch must change over from terminal 13 to terminal 14 otherwise, the burner control will initiate lockout start of the air pressure check.

t3 Short preignition time:

«Z» must be connected to terminal 16, release of fuel via terminal 18.

t3' Long preignition time: «Z» connected to terminal 15.

t3n Postignition time:

- «Z» must be connected to terminal 15

- With short preignition, «Z» remains on until «TSA» has elapsed connection to terminal 16.

t4 Interval «BV1 – BV2» or «BV1 - LR»: On completion of «t4», voltage is present at terminal 19. The voltage is required to power «BV2» connected to auxiliary switch «v» in the actuator.

t5 Interval: On completion of «t5», terminal 20 receives power. At the same time, control outputs 9 to 11 and input 8 are galvanically separated from the LAL...'s control section.

LAL... is now protected against reverse voltages from the load control

circuit. With the release of «LR» at terminal 20, the startup sequence of the LAL... ends. After a few idle steps (steps with no contact position changes), the sequence switch switches itself off.

B Operating position of the burner

B-C Burner operation: during burner operation, «LR» drives the air damper to the nominal load or low-fire position, depending on heat demand; the release of the nominal load takes place via auxiliary switch «v» in the actuator and in the event of loss of flame during operation, the LAL... will initiate lockout. For automatic start repetition, the clearly marked wire link «B» on the plugin section of the LAL... must be cut away.

C Controlled shutdown: in the case of controlled shutdown, «BV...» will immediately be closed. At the same time, the sequence switch is started to program «t6»

C-D Sequence switch travels to start position «A»

t6 Postpurge time: fan «M2» connected to terminal 7. Shortly after the start of «t6», terminal 10 receives power and the air damper is driven to the MIN position. Full closing of the air damper starts only shortly before «t6» has elapsed initiated by the control signal at terminal 11. During the following burner off time, terminal 11 is live.

t13 Permissible afterburn time: during «t13», the flame signal input may still receive a flame signal.

D-A End of control program: start position

As soon as the sequence switch has reached the start position – having thereby switched itself off – the flame detector and flame simulation test will start again.

During burner off times, the flame supervision circuit is live.

Lockout and indication of the stop position

Whenever a fault occurs, the sequence switch stops and with it the lockout indicator. The symbol appearing above the reading mark indicates the type of fault:

◀ No start. One of the contacts is not closed (also refer to «Preconditions for burner startup»):

Extraneous light:

Lockout during or after completion of the control program

Examples: nonextinguished flame, leaking fuel valves faulty flame supervision circuit.

▲ Interruption of startup. No OPEN signal at terminal 8 from the changeover end switch «a». Terminals 6, 7 and 15 are live until fault has been corrected

P Lockout**.** No air pressure indication at the beginning of the air pressure check. Air pressure failure after the air pressure check.

■ Defect in the flame supervision circuit.

▼ Interruption of the startup sequence. No positioning signal at terminal 8 from the auxiliary switch «m» for the low-fire position. Terminals 6, 7 and 15 are live until fault has been corrected.

1 Lockout. No flame signal at the end of the safety time.

| Flame signa has been lost during operation.

A Consenso all'avviamento (ad esempio tramite il termostato o il pressostato R dell'impianto

B Operating position of the burner

B-C Burner operation: during burner operation, «LR» drives the air damper to the nominal load or low-fire position, depending on heat demand; the release of the nominal load takes place via auxiliary switch «v» in the actuator and in the event of loss of flame during operation, the LAL... will initiate lockout. For automatic start repetition, the clearly marked wire link «B» on the plugin section of the LAL... must be cut away.

C Controlled shutdown: in the case of controlled shutdown, «BV...» will immediately be closed. At the same time, the sequence switch is started to program «t6»

C-D Sequence switch travels to start position «A».

During burner off times, the flame supervision circuit is live.

Lockout indication

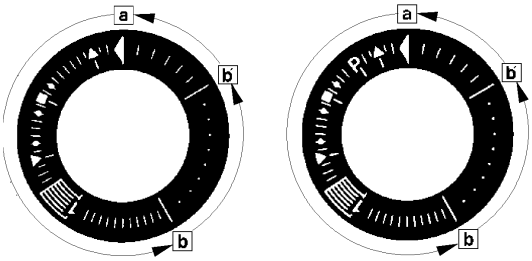

a-b Startup sequence
b-b' Idle step (with no contact confirmation)
b(b')-a Postpurge program

Burner control can immediately be reset after lockout:
Do not press the lockout reset button for more than 10 seconds
The sequence switch always travels to the start position first
After resetting
After rectification of a fault that led to shutdown
After each power failure
During this period of time, power is only fed to terminals 7 and 9...11.
Then, the LAL.... will program a new burner startup sequence

Specifications

Power supply	AC 230 V -15 / +10 %
for LAL2... on request AC 100 V -15 %...AC 110 V +10 %	
Frequency	50 Hz -6 %...60 Hz +6 %
Absorption	AC 3.5 VA
Mounting position	optional
Protection	IP 40
Perm. input current at terminal 1	AC 5 A max., 20 A peak
Perm. current rating of control terminals 3, 6, 7, 9...11, 15...20	4 A max., 20 A peak
Internal fuse	T6,3H250V according to IEC 127
External fuse	max. 10 A
Weight	Device 1000 g Plug-in base 165 g

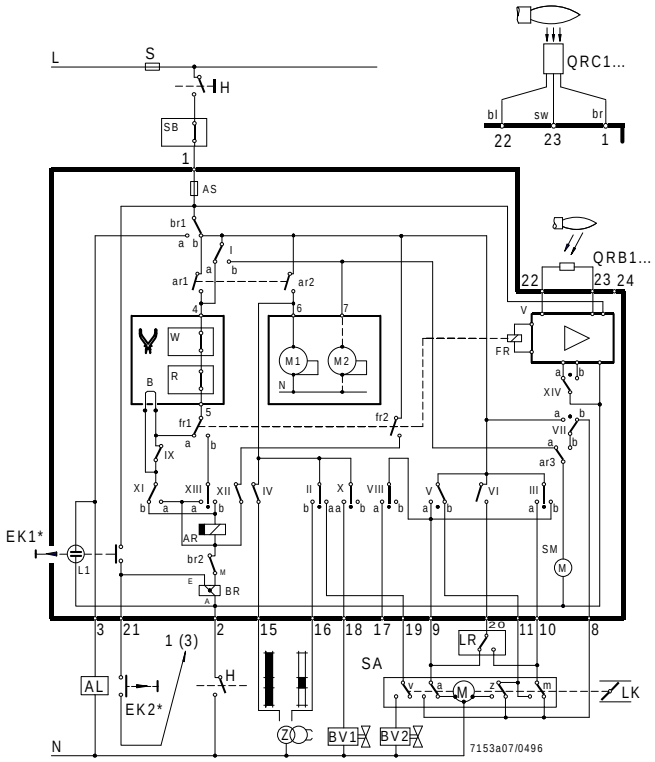

Sequence diagram

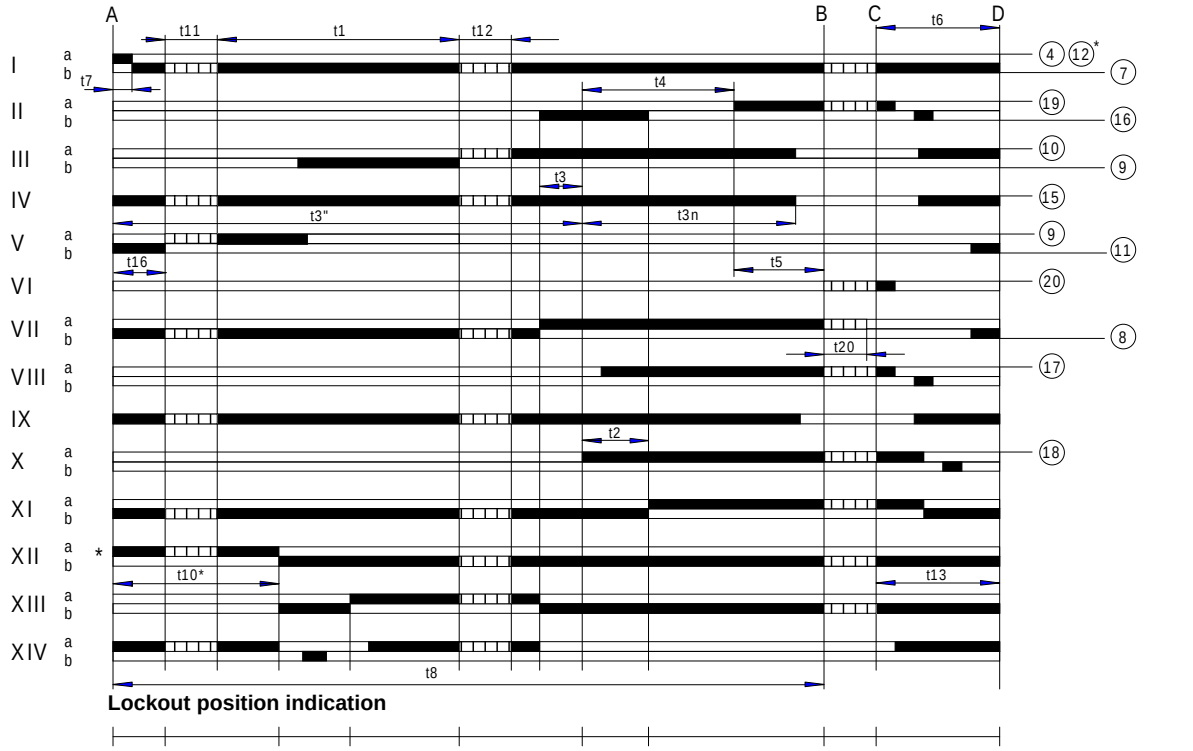

Key

t1 Prepurge time with air damper fully open
t2 Safety time
t3 Preignition time, short («Z» connected to terminal 16)
T3' Preignition time, long («Z» connected to terminal 15)
t3n Postignition time («Z» connected to terminal 15)
t4 Interval between voltage at terminals 18 and 19 («BV1-BV2»)
t5 Interval between voltage at terminals 19 and 20 («BV2» load controller)

t6	Postpurge time (with «M2»)
t7	Interval between start command and voltage at terminal 7 (start delay time for «M2»)
t8	Duration of startup sequence (excluding «t11» and «t12»)
t10	Interval from startup to the beginning of the air pressure check
t11	Air damper running time to the OPEN position
t12	Air damper running time to the low-fire position (MIN)
t13	Permissible afterburn time
t16	Interval to the OPEN command for the air damper
t20	For self-shutdown of the sequence switch

C.I.B. UNIGAS S.p.A.
Via L.Galvani, 9 - 35011 Campodarsego (PD) - ITALY
Tel. +39 049 9200944 - Fax +39 049 9200945/9201269
web site: www.cibunigas.it - e-mail: cibunigas@cibunigas.it

Note: specifications and data subject to change. Errors and omissions exceptd.

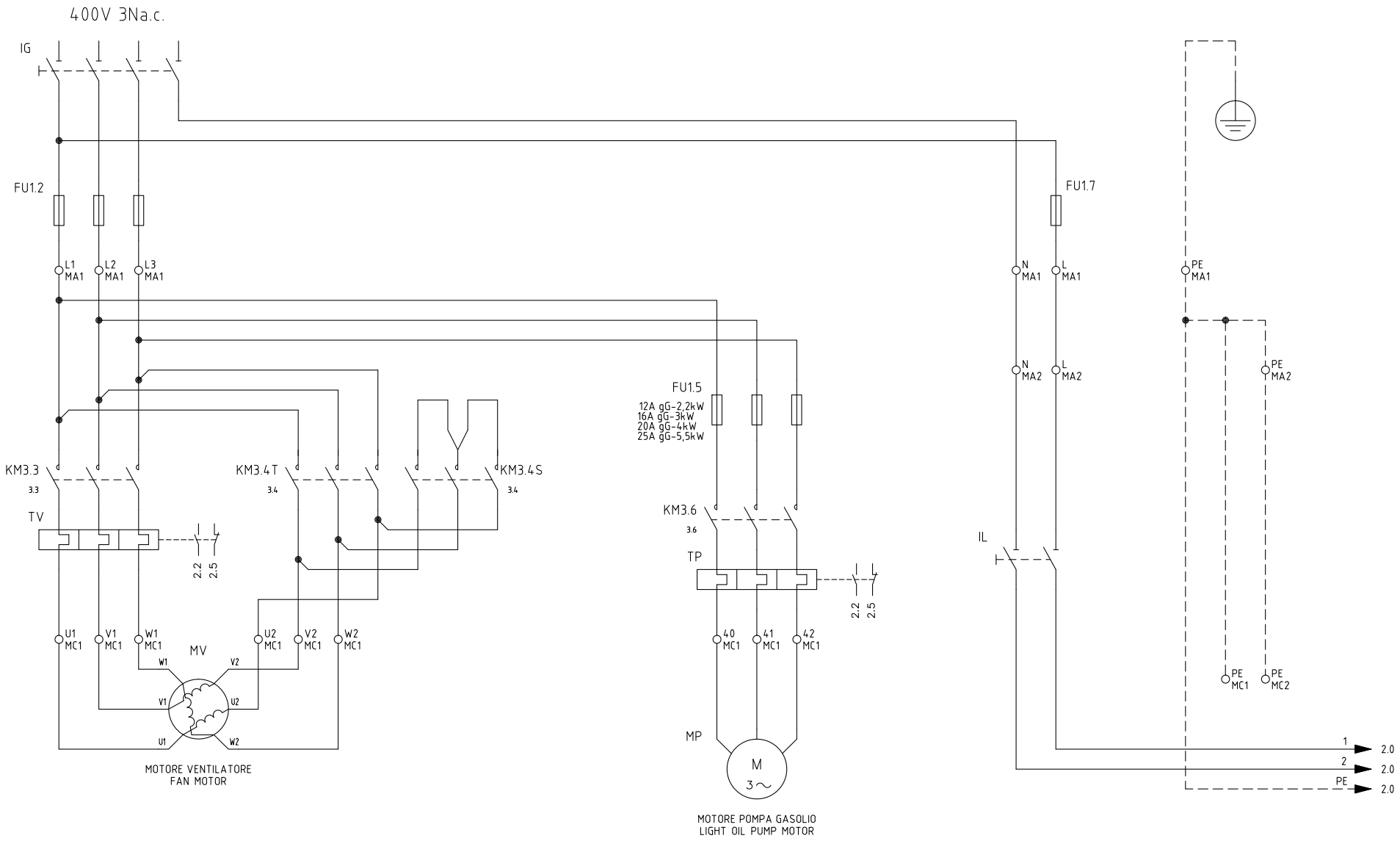

REV.	MODIFICA	DATA	FIRME
02	ELIMINATO SELETTORE "CMF"/REMOVED "CMF" SWITCH	25/11/13	U. PINTON
01	AGGIUNTO/ADDED "POMAX"	20/07/12	U. PINTON

UNIGAS

Impianto: TIPI/TYPES RG1030 / RG1040
MODELLO/MODEL G-.PR.S.xx.A

Descrizione

Ordine

Commessa

Esecutore: U. PINTON

Data Controllato: 20/07/2012

Controllato: S. MARCHETTI

Data: 05/07/2011

Revisione: 02

Dis. N. 12 – 0186

PREC.	FOGLIO
/	1
SEGUE	TOTALE
2	6

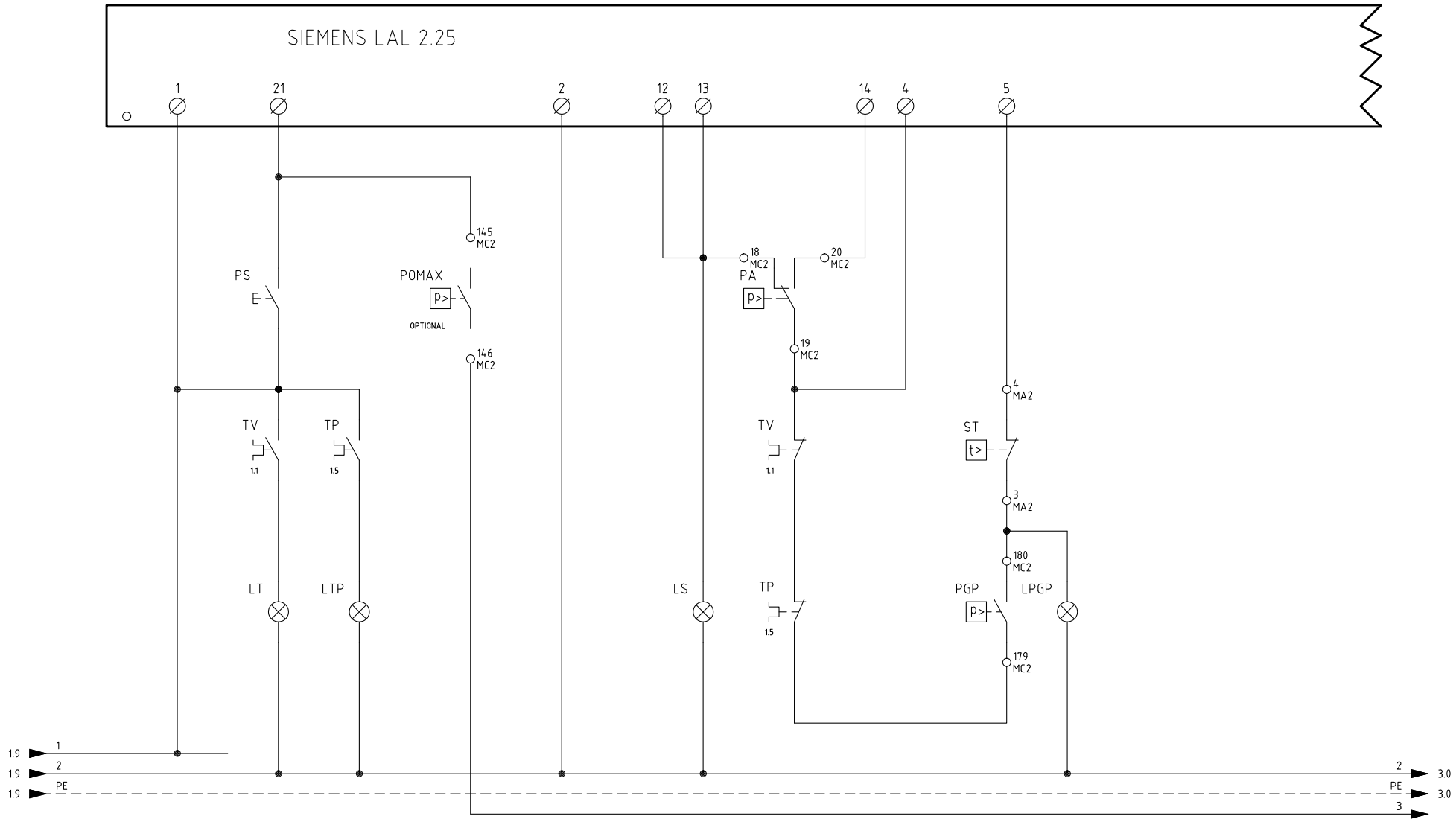

Data	05/07/2011	PREC.	FOGLIO
Revisione	02	1	2
Dis. N.	12 – 0186	SEGUE	TOTALE
		3	6

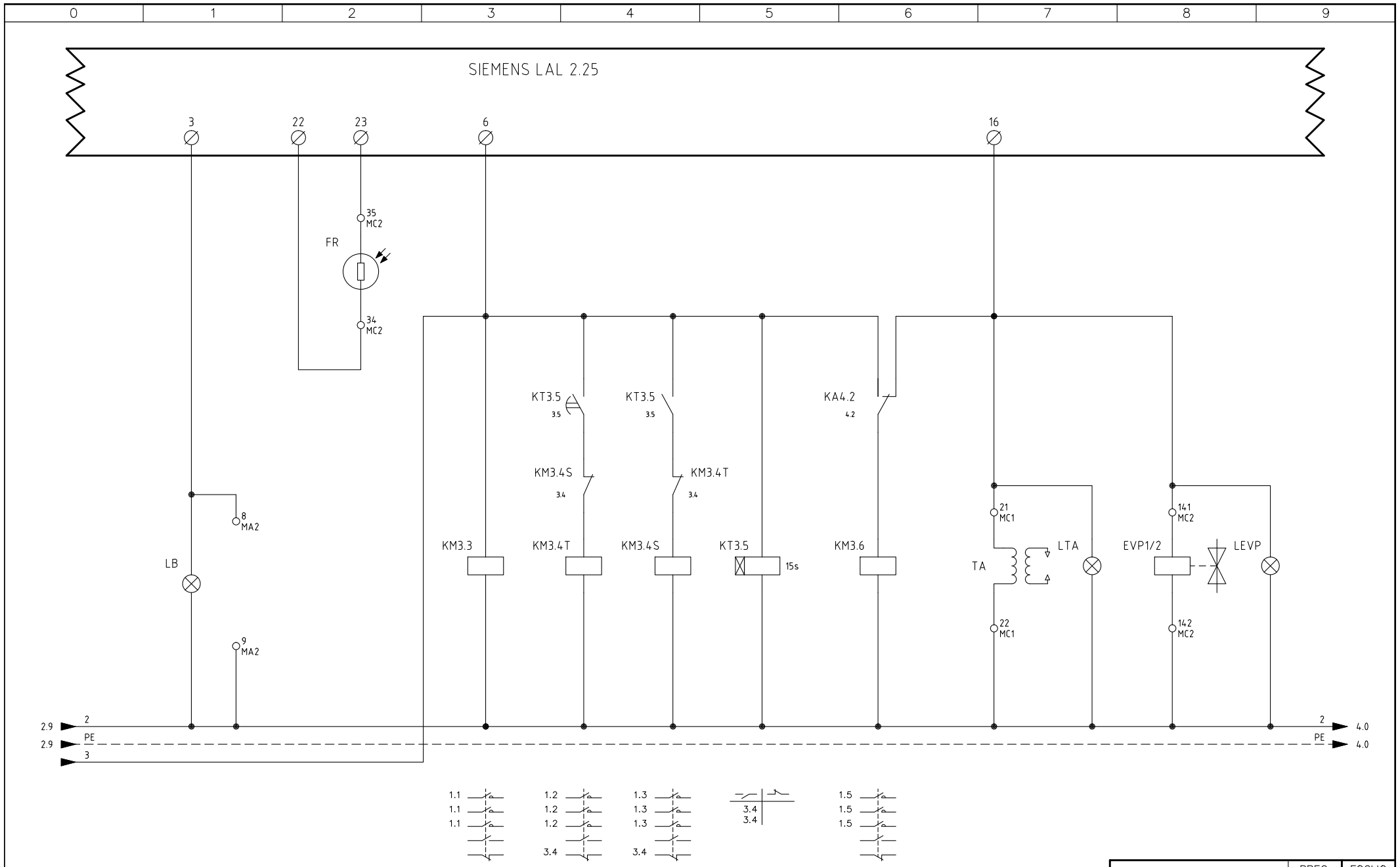

Data 05/07/2011		PREC.	FOGLIO
Revisione 02		2	3
Dis. N. 12 – 0186		SEGUE	TOTALE
		4	6

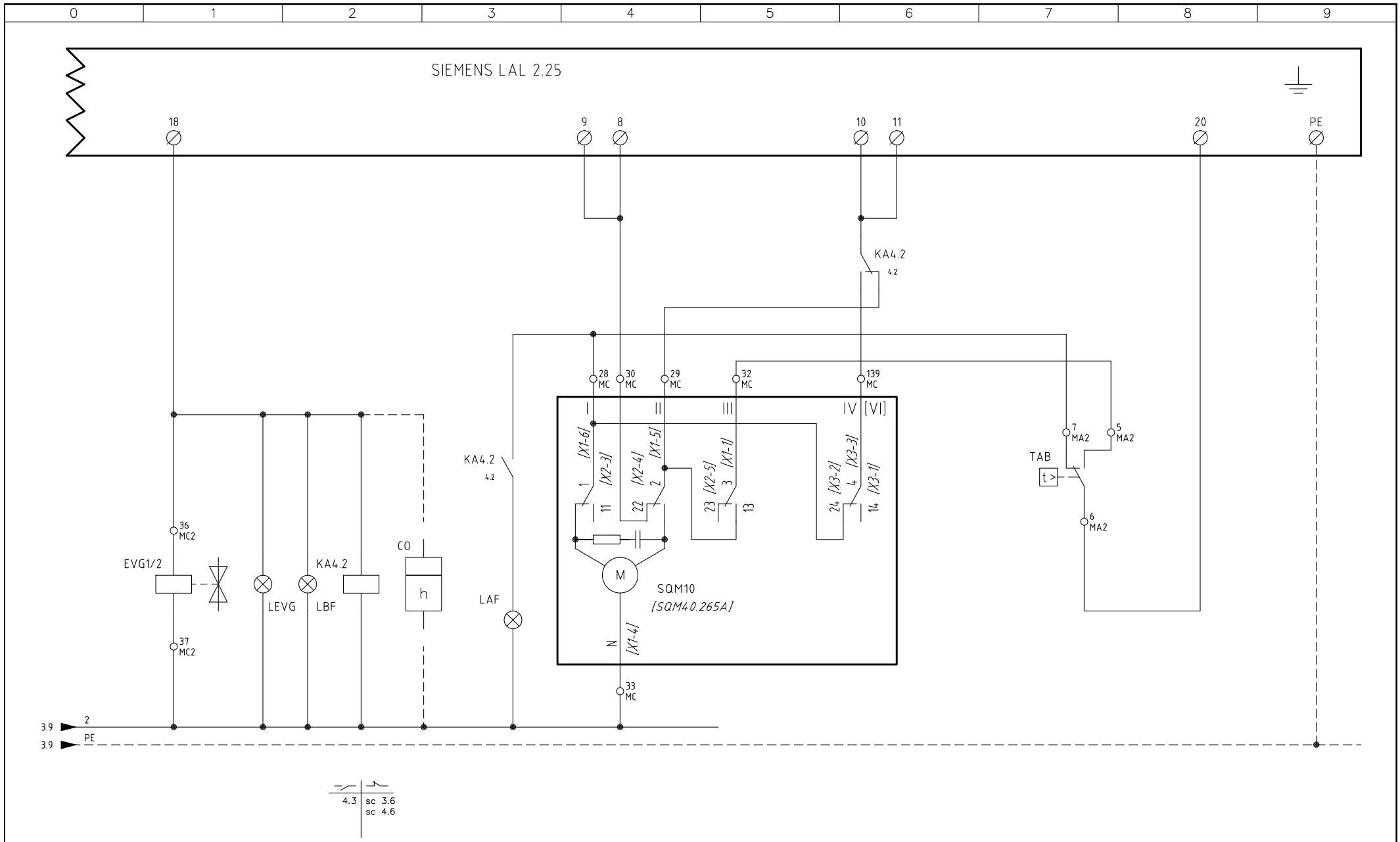

Data	05/07/2011	PREC.	FOGLIO
Revisione	02	3	4
Dis. N.	12 – 0186	SEGUE	TOTALE
		5	6

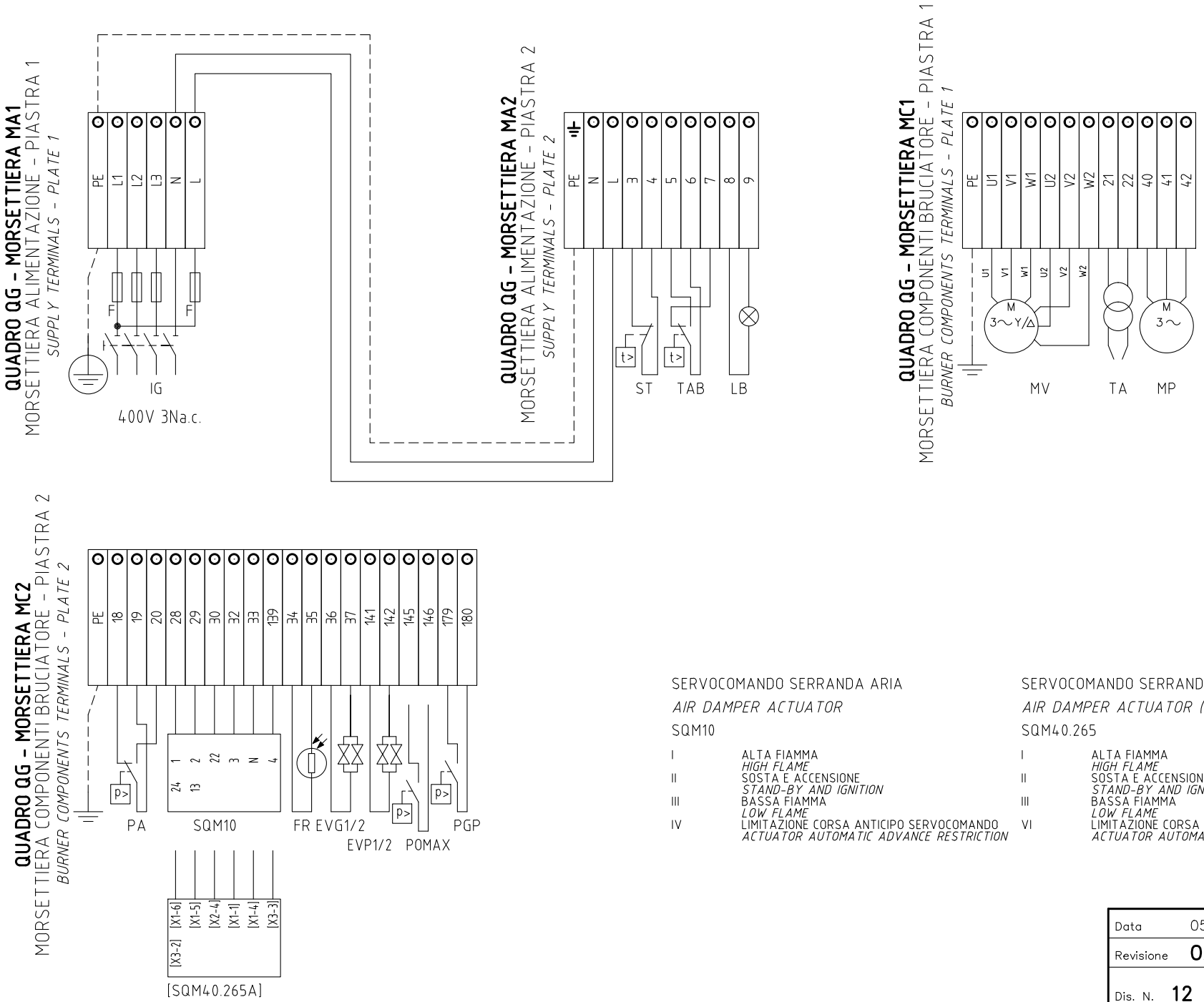

SERVOCOMANDO SERRANDA ARIA

AIR DAMPER ACTUATOR

SQM10

I	ALTA FIAMMA *HIGH FLAME*
II	SOSTA E ACCENSIONE *STAND-BY AND IGNITION*
III	BASSA FIAMMA *LOW FLAME*
IV	LIMITAZIONE CORSA ANTICIPO SERVOCOMANDO *ACTUATOR AUTOMATIC ADVANCE RESTRICTION*

SERVOCOMANDO SERRANDA ARIA (ALTERNATIVO)

AIR DAMPER ACTUATOR (ALTERNATIVE)

SQM40.265

I	ALTA FIAMMA *HIGH FLAME*
II	SOSTA E ACCENSIONE *STAND-BY AND IGNITION*
III	BASSA FIAMMA *LOW FLAME*
VI	LIMITAZIONE CORSA ANTICIPO SERVOCOMANDO *ACTUATOR AUTOMATIC ADVANCE RESTRICTION*

Data 05/07/2011		PREC.	FOGLIO
Revisione 02		4	5
Dis. N. 12 – 0186		SEGUE	TOTALE
		6	6

0	1	2	3	4	5	6	7	8	9

SIGLA/ITEM	FOGLIO/SHEET	FUNZIONE	FUNCTION
CO	4	CONTAORE DI FUNZIONAMENTO (OPTIONAL)	OPERATION TIME COUNTER (OPTIONAL)
EVG1/2	4	ELETTROVALVOLE GASOLIO	LIGHT OIL ELECTRO VALVE
EVP1/2	3	ELETTROVALVOLE PILOTA GAS	PILOT GAS ELECTRO-VALVES
FR	3	FOTORESISTENZA RILEVAZIONE FIAMMA	PHOTORESISTOR FLAME DETECTOR
FU1.2	1	FUSIBILI LINEA BRUCIATORE	BURNER LINE FUSES
FU1.5	1	FUSIBILI LINEA POMPA	PUMP LINE FUSES
FU1.7	1	FUSIBILE LINEA AUSILIARI	AUXILIARY LINE FUSE
IG	1	INTERRUTTORE LINEA BRUCIATORE	BURNER LINE SWITCH
IL	1	INTERRUTTORE LINEA AUSILIARI	AUXILIARY LINE SWITCH
KA4.2	4	RELE' AUSILIARIO	AUXILIARY RELAY
KM3.3	3	CONTATTORE MOTORE VENTILATORE (LINEA)	FAN MOTOR CONTACTOR (LINE)
KM3.4S	3	CONTATTORE MOTORE VENTILATORE (STELLA)	FAN MOTOR CONTACTOR (STAR)
KM3.4T	3	CONTATTORE MOTORE VENTILATORE (TRIANGOLO)	FAN MOTOR CONTACTOR (DELTA)
KM3.6	3	CONTATTORE MOTORE POMPA GASOLIO	LIGHT OIL PUMP MOTOR CONTACTOR
KT3.5	3	TEMPORIZZATORE STELLA/TRIANGOLO	STAR/DELTA DELAYED RELAY
LAF	4	LAMPADA SEGNALAZIONE ALTA FIAMMA BRUCIATORE	BURNER IN HIGH FLAME INDICATOR LIGHT
LB	3	LAMPADA SEGNALAZIONE BLOCCO BRUCIATORE	INDICATOR LIGHT FOR BURNER LOCK-OUT
LBF	4	LAMPADA SEGNALAZIONE BASSA FIAMMA BRUCIATORE	BURNER IN LOW FLAME INDICATOR LIGHT
LEVG	4	LAMPADA SEGNALAZIONE APERTURA [EVG]	INDICATOR LIGHT FOR OPENING OF ELECTRO-VALVE [EVG]
LEVP	3	LAMPADA SEGNALAZIONE APERTURA [EVP]	INDICATOR LIGHT FOR OPENING OF ELECTRO-VALVE [EVP]
LPGP	2	LAMPADA SEGNALAZIONE PRESSOSTATO GAS PILOTA	INDICATOR LIGHT FOR PRESENCE OF GAS IN THE PILOT NETWORK
LS	2	LAMPADA SEGNALAZIONE SOSTA BRUCIATORE	INDICATOR LIGHT FOR BURNER STAND-BY
LT	2	LAMPADA SEGNALAZIONE BLOCCO TERMICO MOTORE VENTILATORE	INDICATOR LIGHT FOR FAN MOTOR OVERLOAD THERMAL CUTOUT
LTA	3	LAMPADA SEGNALAZIONE TRASFORMATORE DI ACCENSIONE	IGNITION TRANSFORMER INDICATOR LIGHT
LTP	2	LAMPADA SEGNALAZIONE BLOCCO TERMICO POMPA	INDICATOR LIGHT FOR PUMP OVERLOAD TRIPPED
MP	1	MOTORE POMPA GASOLIO	LIGHT OIL PUMP MOTOR
MV	1	MOTORE VENTILATORE	FAN MOTOR
PA	2	PRESSOSTATO ARIA	AIR PRESSURE SWITCH
PGP	2	PRESSOSTATO PILOTA GAS	PILOT MINIMUM GAS PRESSURE SWITCH
POMAX	2	PRESSOSTATO DI MASSIMA PRESSIONE OLIO (OPTIONAL)	MAXIMUM OIL PRESSURE SWITCH (OTIONAL)
PS	2	PULSANTE SBLOCCO FIAMMA	LOCK-OUT RESET BUTTON
SIEMENS LAL 2.25	2	APPARECCHIATURA CONTROLLO FIAMMA	CONTROL BOX
SQM10	4	SERVOCOMANDO SERRANDA ARIA	AIR DAMPER ACTUATOR
ST	2	SERIE TERMOSTATI/PRESSOSTATI	SERIES OF THERMOSTATS OR PRESSURE SWITCHES
TA	3	TRASFORMATORE DI ACCENSIONE	IGNITION TRANSFORMER
TAB	4	TERMOSTATO/PRESSOSTATO ALTA-BASSA FIAMMA	HIGH-LOW THERMOSTAT/PRESSURE SWITCHES
TP	1	TERMICO MOTORE POMPA	PUMP MOTOR THERMAL
TV	1	TERMICO MOTORE VENTILATORE	FAN MOTOR THERMAL
[SQM40.265A]	4	SERVOCOMANDO SERRANDA ARIA (ALTERNATIVO)	AIR DAMPER ACTUATOR (ALTERNATIVE)