TP1030
TP1050
TP1080

Gas burners

MANUAL OF INSTALLATION - USE - MAINTENANCE

CIB UNIGAS

BURNERS - BRUCIATORI - BRULERS - BRENNER - QUEMADORES - ГОРЕЛКИ

M039168CD 0.0 10/2019

DANGERS, WARNINGS AND NOTES OF CAUTION

THIS MANUAL IS SUPPLIED AS AN INTEGRAL AND ESSENTIAL PART OF THE PRODUCT AND MUST BE DELIVERED TO THE USER.

INFORMATION INCLUDED IN THIS SECTION ARE DEDICATED BOTH TO THE USER AND TO PERSONNEL FOLLOWING PRODUCT INSTALLATION AND MAINTENANCE.

THE USER WILL FIND FURTHER INFORMATION ABOUT OPERATING AND USE RESTRICTIONS, IN THE SECOND SECTION OF THIS MANUAL. WE HIGHLY RECOMMEND TO READ IT.

CAREFULLY KEEP THIS MANUAL FOR FUTURE REFERENCE.

1) GENERAL INTRODUCTION

- The equipment must be installed in compliance with the regulations in force, following the manufacturer's instructions, by qualified personnel.
- Qualified personnel means those having technical knowledge in the field of components for civil or industrial heating systems, sanitary hot water generation and particularly service centres authorised by the manufacturer.
- Improper installation may cause injury to people and animals, or damage to property, for which the manufacturer cannot be held liable.
- Remove all packaging material and inspect the equipment for integrity.

In case of any doubt, do not use the unit - contact the supplier.

The packaging materials (wooden crate, nails, fastening devices, plastic bags, foamed polystyrene, etc), should not be left within the reach of children, as they may prove harmful.

- Before any cleaning or servicing operation, disconnect the unit from the mains by turning the master switch OFF, and/or through the cut-out devices that are provided.
- Make sure that inlet or exhaust grilles are unobstructed.
- In case of breakdown and/or defective unit operation, disconnect the unit. Make no attempt to repair the unit or take any direct action.

Contact qualified personnel only.

Units shall be repaired exclusively by a servicing centre, duly authorised by the manufacturer, with original spare parts and accessories.

Failure to comply with the above instructions is likely to impair the unit's safety.

To ensure equipment efficiency and proper operation, it is essential that maintenance operations are performed by qualified personnel at regular intervals, following the manufacturer's instructions.

- When a decision is made to discontinue the use of the equipment, those parts likely to constitute sources of danger shall be made harmless.
- In case the equipment is to be sold or transferred to another user, or in case the original user should move and leave the unit behind, make sure that these instructions accompany the equipment at all times so that they can be consulted by the new owner and/or the installer.
- This unit shall be employed exclusively for the use for which it is meant. Any other use shall be considered as improper and, therefore, dangerous.

The manufacturer shall not be held liable, by agreement or otherwise, for damages resulting from improper installation, use and failure to comply with the instructions supplied by the manufacturer.The occurrence of any of the following circustances may cause explosions, polluting unburnt gases (example: carbon monoxide CO), burns, serious harm to people, animals and things:

- Failure to comply with one of the WARNINGS in this chapter
- Incorrect handling, installation, adjustment or maintenance of the burner
- Incorrect use of the burner or incorrect use of its parts or optional supply

2) SPECIAL INSTRUCTIONS FOR BURNERS

- The burner should be installed in a suitable room, with ventilation openings complying with the requirements of the regulations in force, and sufficient for good combustion.
- Only burners designed according to the regulations in force should be used.
- This burner should be employed exclusively for the use for which it was designed.
- Before connecting the burner, make sure that the unit rating is the same as delivery mains (electricity, gas oil, or other fuel).
- Observe caution with hot burner components. These are, usually, near to the flame and the fuel pre-heating system, they become hot during the unit operation and will remain hot for some time after the burner has stopped.

When the decision is made to discontinue the use of the burner, the user shall have qualified personnel carry out the following operations:

a Remove the power supply by disconnecting the power cord from the mains.

b Disconnect the fuel supply by means of the hand-operated shut-off valve and remove the control handwheels from their spindles.

Special warnings

- Make sure that the burner has, on installation, been firmly secured to the appliance, so that the flame is generated inside the appliance fire-box.
- Before the burner is started and, thereafter, at least once a year, have qualified personnel perform the following operations:

a set the burner fuel flow rate depending on the heat input of the appliance;

b set the flow rate of the combustion-supporting air to obtain a combustion efficiency level at least equal to the lower level required by the regulations in force;

c check the unit operation for proper combustion, to avoid any harmful or polluting unburnt gases in excess of the limits permitted by the regulations in force;

d make sure that control and safety devices are operating properly;

e make sure that exhaust ducts intended to discharge the products of combustion are operating properly;

f on completion of setting and adjustment operations, make sure that all mechanical locking devices of controls have been duly tightened;

g make sure that a copy of the burner use and maintenance instructions is available in the boiler room.

- In case of a burner shut-down, reser the control box by means of the RESET pushbutton. If a second shut-down takes place, call the Technical Service, **without trying to RESET further**.
- The unit shall be operated and serviced by qualified personnel only, in compliance with the regulations in force.

3) GENERAL INSTRUCTIONS DEPENDING ON FUEL USED

3a) ELECTRICAL CONNECTION

- For safety reasons the unit must be efficiently earthed and installed as required by current safety regulations.
- It is vital that all saftey requirements are met. In case of any doubt, ask for an accurate inspection of electrics by qualified personnel, since the manufacturer cannot be held liable for damages that may be caused by failure to correctly earth the equipment.
- Qualified personnel must inspect the system to make sure that it is adequate to take the maximum power used by the equipment shown on the equipment rating plate. In particular, make sure that the system cable cross section is adequate for the power absorbed by the unit.
- No adaptors, multiple outlet sockets and/or extension cables are permitted to connect the unit to the electric mains.
- An omnipolar switch shall be provided for connection to mains, as required by the current safety regulations.
- The use of any power-operated component implies observance of a few basic rules, for example:
  - do not touch the unit with wet or damp parts of the body and/or with bare feet;
  - do not pull electric cables;
  - do not leave the equipment exposed to weather (rain, sun, etc.) unless expressly required to do so;
  - do not allow children or inexperienced persons to use equipment;
- The unit input cable shall not be replaced by the user.
  In case of damage to the cable, switch off the unit and contact qualified personnel to replace.
  When the unit is out of use for some time the electric switch supplying all the power-driven components in the system (i.e. pumps, burner, etc.) should be switched off.

3b) FIRING WITH GAS, LIGHT OIL OR OTHER FUELS

GENERAL

- The burner shall be installed by qualified personnel and in compliance with regulations and provisions in force; wrong installation can cause injuries to people and animals, or damage to property, for which the manufacturer cannot be held liable.
- Before installation, it is recommended that all the fuel supply system pipes be carefully cleaned inside, to remove foreign matter that might impair the burner operation.
- Before the burner is commissioned, qualified personnel should inspect the following:

a the fuel supply system, for proper sealing;
b the fuel flow rate, to make sure that it has been set based on the firing rate required of the burner;
c the burner firing system, to make sure that it is supplied for the designed fuel type;
d the fuel supply pressure, to make sure that it is included in the range shown on the rating plate;
e the fuel supply system, to make sure that the system dimensions are adequate to the burner firing rate, and that the system is equipped with all the safety and control devices required by the regulations in force.

- When the burner is to remain idle for some time, the fuel supply tap or taps should be closed.

SPECIAL INSTRUCTIONS FOR USING GAS

Have qualified personnel inspect the installation to ensure that:

a the gas delivery line and train are in compliance with the regulations and provisions in force;
b all gas connections are tight;
c the boiler room ventilation openings are such that they ensure the air supply flow required by the current regulations, and in any case are sufficient for proper combustion.

- Do not use gas pipes to earth electrical equipment.
- Never leave the burner connected when not in use. Always shut the gas valve off.
- In case of prolonged absence of the user, the main gas delivery valve to the burner should be shut off.

Precautions if you can smell gas

a do not operate electric switches, the telephone, or any other item likely to generate sparks;
b immediately open doors and windows to create an air flow to purge the room;
c close the gas valves;
d contact qualified personnel.

- Do not obstruct the ventilation openings of the room where gas appliances are installed, to avoid dangerous conditions such as the development of toxic or explosive mixtures.

DIRECTIVES AND STANDARDS

Gas burners

European directives

-Regulation 2016/426/UE (appliances burning gaseous fuels)
-2014/35/UE (Low Tension Directive)
-2014/30/UE (Electromagnetic compatibility Directive)
-2006/42/EC (Machinery Directive)

Harmonized standards

-UNI EN 676 (Automatic forced draught burners for gaseous fuels)
-EN 55014-1 (Electromagnetic compatibility- Requirements for house hold appliances, electric tools and similar apparatus)
-EN 60204-1:2006 (Safety of machinery – Electrical equipment of machines.)
-CEI EN 60335-1 (Specification for safety of household and similar electrical appliances);
-CEI EN 60335-2-102 (Household and similar electrical appliances. Safety. Particular requirements for gas, oil and solid-fuel burning appliances having electrical connections).
-UNI EN ISO 12100:2010 (Safety of machinery - General principles for design - Risk assessment and risk reduction);

Light oil burners

European directives

-2014/35/UE (Low Tension Directive)
-2014/30/UE (Electromagnetic compatibility Directive)
-2006/42/EC (Machinery Directive)

Harmonized standards

-UNI EN 267-2011(Automatic forced draught burners for liquid fuels)
-EN 55014-1 (Electromagnetic compatibility- Requirements for house hold appliances, electric tools and similar apparatus)
-EN 60204-1:2006 (Safety of machinery – Electrical equipment of machines.)
-CEI EN 60335-1 (Specification for safety of household and similar electrical appliances);
-CEI EN 60335-2-102 (Household and similar electrical appliances. Safety. Particular requirements for gas, oil and solid-fuel burning appliances having electrical connections).
-UNI EN ISO 12100:2010 (Safety of machinery - General principles for design - Risk assessment and risk reduction);

National Standard

-UNI 7824 (Atomizing burners of the monobloc type. Characteristics and test methods)

Heavy oil burners

European Directives

-2014/35/UE (Low Tension Directive)
-2014/30/UE (Electromagnetic compatibility Directive)
-2006/42/EC (Machinery Directive)

Harmonized standards

-UNI EN 267(Automatic forced draught burners for liquid fuels)
-EN 55014-1 (Electromagnetic compatibility- Requirements for house hold appliances, electric tools and similar apparatus)
-EN 60204-1:2006 (Safety of machinery – Electrical equipment of machines.)
-CEI EN 60335-1 (Specification for safety of household and similar electrical appliances);
-CEI EN 60335-2-102 (Household and similar electrical appliances. Safety. Particular requirements for gas, oil and solid-fuel burning appliances having electrical connections).
-UNI EN ISO 12100:2010 (Safety of machinery - General principles for design - Risk assessment and risk reduction);

Norme nazionali / National Standard

-UNI 7824 (Atomizing burners of the monobloc type. Characteristics and test methods.

Gas - Light oil burners

European Directives

-Regulation 2016/426/UE (appliances burning gaseous fuels)
-2014/35/UE (Low Tension Directive)
-2014/30/UE (Electromagnetic compatibility Directive)
-2006/42/EC (Machinery Directive)

Harmonized standards

-UNI EN 676 (Automatic forced draught burners for gaseous fuels)
-UNI EN 267(Automatic forced draught burners for liquid fuels)
-EN 55014-1 (Electromagnetic compatibility- Requirements for house hold appliances, electric tools and similar apparatus)
-EN 60204-1:2006 (Safety of machinery – Electrical equipment of machines.)
-CEI EN 60335-1 (Specification for safety of household and similar electrical appliances);
-CEI EN 60335-2-102 (Household and similar electrical appliances. Safety. Particular requirements for gas, oil and solid-fuel burning appliances having electrical connections).
-UNI EN ISO 12100:2010 (Safety of machinery - General principles for design - Risk assessment and risk reduction);

Norme nazionali / National Standard

-UNI 7824 (Atomizing burners of the monobloc type. Characteristics and test methods.

Gas - Heavy oil burners

European directives:

-Regulation 2016/426/UE (appliances burning gaseous fuels)
-2014/35/UE (Low Tension Directive)
-2014/30/UE (Electromagnetic compatibility Directive)
-2006/42/EC (Machinery Directive)

Harmonized standards

-UNI EN 676 (Automatic forced draught burners for gaseous fuels)
-EN 55014-1 (Electromagnetic compatibility- Requirements for house hold appliances, electric tools and similar apparatus)
-EN 60204-1:2006 (Safety of machinery – Electrical equipment of machines.)
-CEI EN 60335-1 (Specification for safety of household and similar electrical appliances);
-CEI EN 60335-2-102 (Household and similar electrical appliances. Safety. Particular requirements for gas, oil and solid-fuel burning appliances having electrical connections).
-UNI EN ISO 12100:2010 (Safety of machinery - General principles for design - Risk assessment and risk reduction);

National Standard

- UNI 7824 (Atomizing burners of the monobloc type. Characteristics and test methods.

Industrial burners

European directives

-Regulation 2016/426/UE (appliances burning gaseous fuels)
-2014/35/UE (Low Tension Directive)
-2014/30/UE (Electromagnetic compatibility Directive)
-2006/42/EC (Machinery Directive)

Harmonized standards

-EN 55014-1 (Electromagnetic compatibility- Requirements for house hold appliances, electric tools and similar apparatus)
-EN 746-2 (Industrial thermoprocessing equipment - Part 2: Safety requirements for combustion and fuel handling systems)
-UNI EN ISO 12100:2010 (Safety of machinery - General principles for design - Risk assessment and risk reduction);
-EN 60204-1:2006 (Safety of machinery – Electrical equipment of machines.)
-EN 60335-2 (Electrical equipment of non-electric appliances for household and similar purposes. Safety requirements)

Burner data plate

For the following information, please refer to the data plate:

- burner type and burner model: must be reported in any communication with the supplier
- burner ID (serial number): must be reported in any communication with the supplier
- date of production (year and month)
- information about fuel type and network pressure

Type	--
Model	--
Year	--
S.Number	--
Output	--
Oil Flow	--
Fuel	--
Category	--
Gas Pressure	--
Viscosity	--
El.Supply	--
El.Consump.	--
Fan Motor	--
Protection	--
Drwaing n°	--
P.I.N.	--

SYMBOLS USED

WARNING! Failure to observe the warning may result in irreparable damage to the unit or damage to the environment

DANGER! Failure to observe the warning may result in serious injuries or death.

WARNING! Failure to observe the warning may result in electric shock with lethal consequences

Figures, illustrations and images used in this manual may differ in appearance from the actual product.

PART I: SPECIFICATIONS

BURNERS FEATURES

This series of industrial burners is designed for all those applications that require big-sized air fans or air-flue heat exchangers to be installed in sound-proof areas to reduce noise. They can be provided with built-in or separate-mounted control panel (console or wall-mounted).

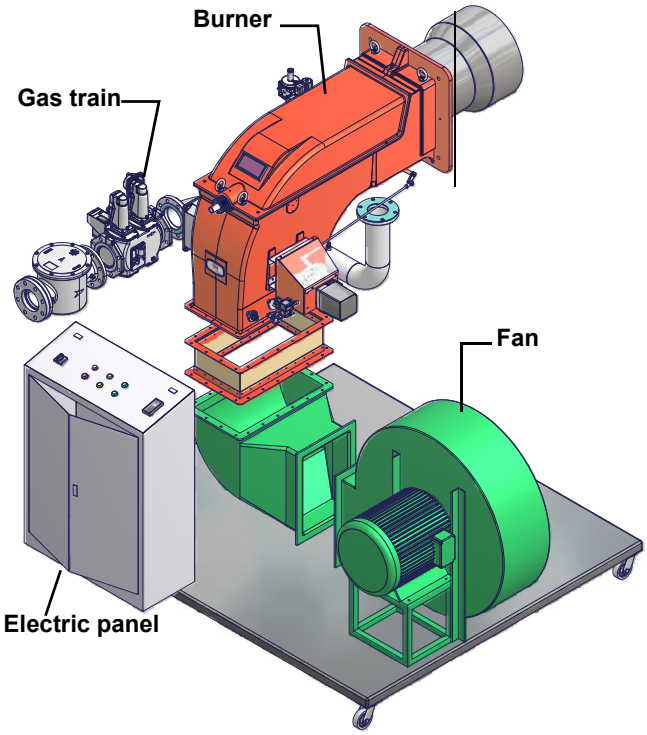

Note: the picture shows one of the possible installations. Fan and electrical panel can be placed according to the customer needs.

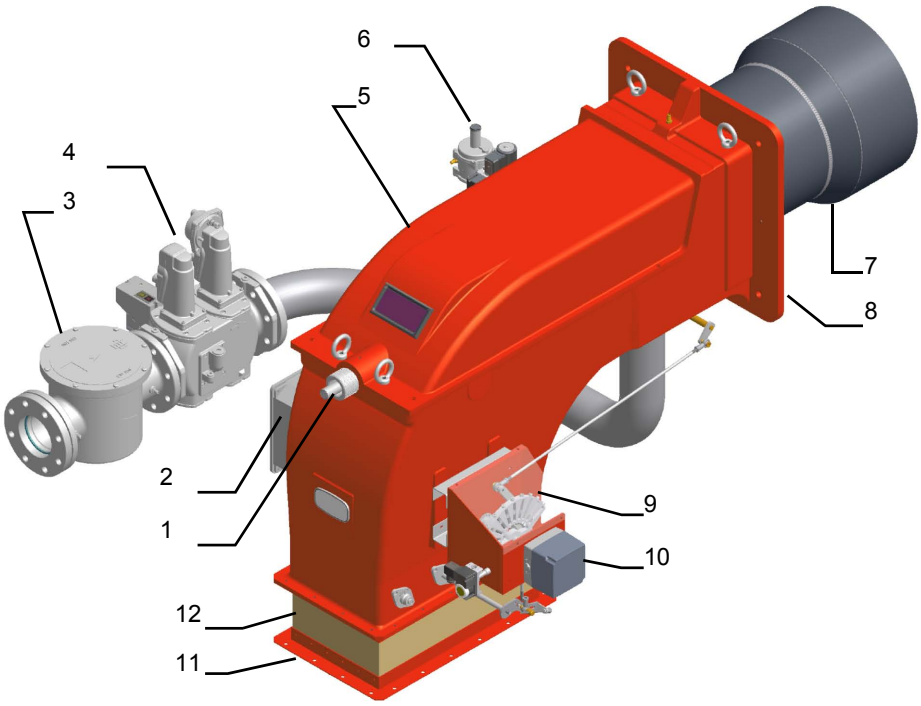

1 Head adjusting ring nut
2 Junction box
3 Gas filter
4 Gas valves group
5 Cover
6 Ignitor gas train
7 Combustion head-blast tube ass.y
8 Burner flange
9 Sector variable
10 Actuator
11 Air inlet flange
12 Bellows

Fig. 1

The gas coming from the supply line, passes through the valves group provided with filter and stabiliser. This one forces the pressure in the utilisation limits. The electric actuator (2), that moves proportionally the air damper and the gas butterfly valve, uses an adjusting cam (1) with variable shape. This one allows the optimisation of the gas flue values, as to get an efficient combustion. The combustion head positioning determines the burner's output. The combustion head (11) determines the energetic quality and the geometry of the flame. Fuel and comburent are routed into separated ways as far as the zone of flame generation (combustion chamber). The air (comburent) and fuel (gas) are forced into the combustion chamber.

How to choose the burner

To check if the burner is suitable for the boiler to which it must be installled, the following parameters are needed:

- fuel
- furnace input, in kW or kcal/h (kW = kcal/h / 860);
- boiler type;
- combustione head type (reverse flame or three phase)'
- temperature or pressure of the thermal carrier fluid
- Comburent air temperature
- Air duct positioning
- Pressure in the combustion chamber
- Elevation (altitude) of burner installation
- Gas train (only for gas burners)
- Pumping unit (only for light-oil or heavy-oil burners)
- Air fan
- Bilt-in or separated control panel
- backpressure (data are available on the boiler's ID plate or in the user's manual).

Burners provided with built-in control panel are designed for IP40 index of protection. For other values of IP, please contact the manifacturer Technical Dpt.

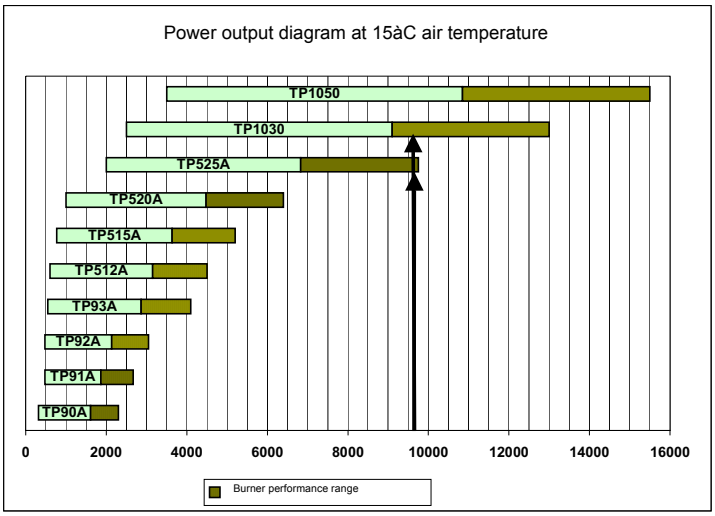

Data requested:

- furnace input;
- air temperature
- altitude
- generator pressure or temperature

Example:

- furnace input: 9600kW
- air temperature: 15°C
- altitude: 0m

Fig. 2

See the diagram in Fig. 2, as to find the burners that better suite the power range requested in the exmple (9600kW). Once the models are founded out, the choice regards technical and economical features. Technical features can be summarised in a higher modulation ratio (fewer start-ups, less consumption, fewer swigings in the generator temperature and pressure values.

Checking the proper gas train size To check the proper gas train size, it is necessary to the available gas pressure value upstream the burner's gas valve. Then subtract the backpressure. The result is called **p_{gas}**. Draw a vertical line matching the furnace input value (600kW, in the example), quoted on the x-axis, as far as intercepitng the network pressure curve, according to the installed gas train (DN65, in the example). From the interception point, draw an horizontal line as far as matching, on the y-axis, the value of pressure necessary to get the requested furnace input. This value must be lower or equal to the **p_{gas}** value, calculated before.

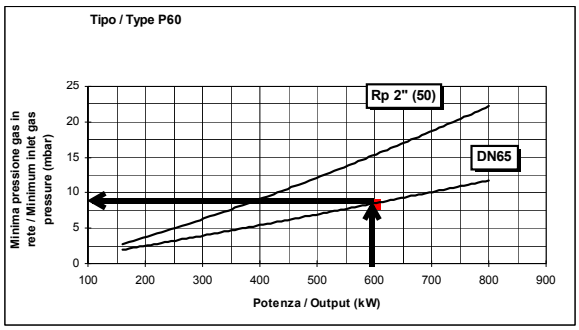

Fig. 3

Burner model identification

Burners are identified by burner type and model. Burner model identification is described as follows.

Type **TP1030** (1)	Model **M-.** (2) **PR.** (3) **S.** (4) ***.** (5) **A.** (6) **1.** (7) **80** (8)
(1) BURNER TYPE	**TP1030 - TP1050 - TP1080**
(2) FUEL	M - Natural gas
(3) OPERATION (Available versions)	PR - Progressive MD - Fully modulating
(4) BLAST TUBE	S - Standard L - extended
(5) DESTINATION COUNTRY	* - see data plate
(6) BURNER VERSION	A - Standard
(7) EQUIPMENT	1 = 2 valves + gas proving system 8 = 2 valves + gas proving system + high gas pressure switch
(8) GAS CONNECTION see Specifications	50 = Rp2 65 = DN65 80 = DN80 100 = DN100

Technical specifications

BURNER TYPE		TP1030	TP1050	TP1080
Output	min - max kW	2500-13300	3500-15500	3500-19000
Fuel		Natural gas		
Category		(see next paragraph)		
Gas rate	min.-max. (Stm^3/h)	265-1376	370-1641	370-2010
Power supply		400V 3N~ 50Hz		
Total power consumption	kW	0.5		
Protection		IP54		
Operation		Progressive - Fully modulating		
Pressure		(see Note 2)		
Gas train 80	ØValves/ Connection	80 / DN80		
Gas train 100	ØValves / Connection	100 / DN100		
Weight	kg	250		
Operating temperature	°C	-10 ÷ +50		
Storage Temperature	°C	-20 ÷ +60		
Working service*		Intermittent		

Note1:	**All gas flow rates are referred to Stm^3 / h (1.013 mbar absolute pressure, 15 °C temperature) and are valid for G20 gas (net calorific value H_i = 34,02 MJ / Stm^3); for L.P.G. (net calorific value H_i = 93,5 MJ / Stm^3)**
Note2:	**Maximum gas pressure = 360 mbar (with Dungs MBDLE)** **= 500 mbar (with Siemens VGD or Dungs MultiBloc MBE)** **Minimum gas pressure = see gas curves.**
Note3:	**Burners are suitable only for indoor operation with a maximum relative humidity of 80 %**

***NOTE ON THE BURNER WORKING SERVICE:** for safety reasons, one controlled shutdown must be performed every 24 hours of continuous operation.

Country and usefulness gas categories

GAS CATEGORY	COUNTRY																								
I_{2H}	AT	ES	GR	SE	FI	IE	HU	IS	NO	CZ	DK	GB	IT	PT	CY	EE	LV	SI	MT	SK	BG	LT	RO	TR	CH
I_{2E}	LU	PL	-	-	-	-	-	-	-	-	-	-	-	-	-	-	-	-	-	-	-	-	-	-	-
$I_{2E(R)B}$	BE	-	-	-	-	-	-	-	-	-	-	-	-	-	-	-	-	-	-	-	-	-	-	-	-
I_{2L}	NL	-	-	-	-	-	-	-	-	-	-	-	-	-	-	-	-	-	-	-	-	-	-	-	-
I_{2ELL}	DE	-	-	-	-	-	-	-	-	-	-	-	-	-	-	-	-	-	-	-	-	-	-	-	-
I_{2Er}	FR	-	-	-	-	-	-	-	-	-	-	-	-	-	-	-	-	-	-	-	-	-	-	-	-

Overall dimensions (mm)

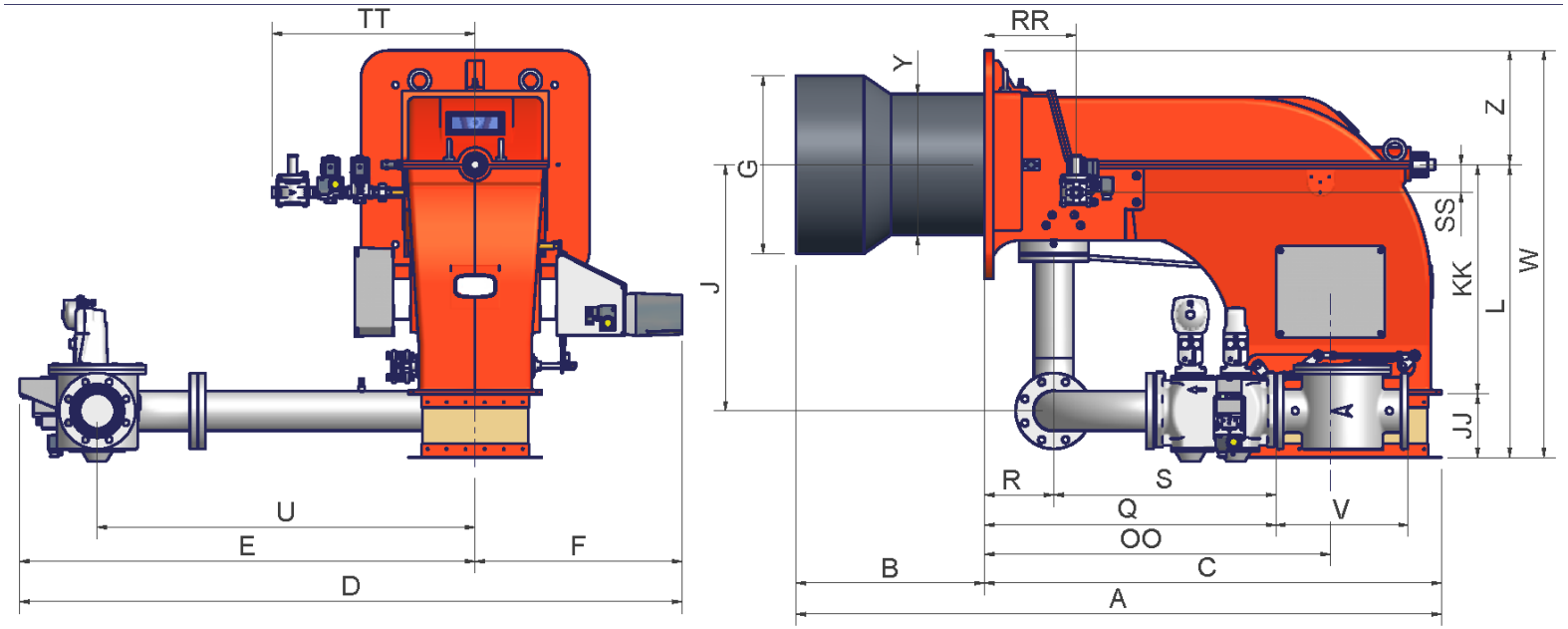

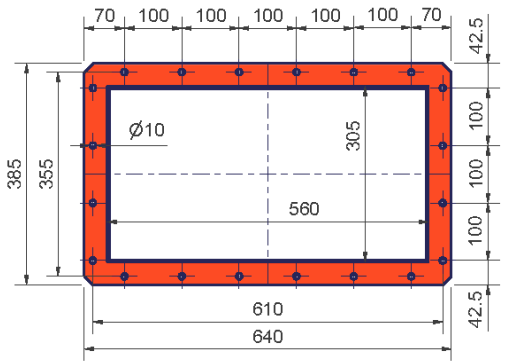

Air inlet flange

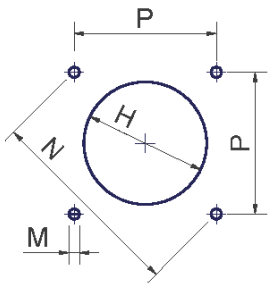

Boiler drilling plate

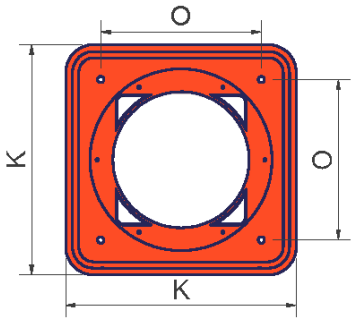

Burner flange

	DN	A	B	C	CC	D	E	F	G	H	J	JJ	K	KK	L	M	N	O	OO	P	Q	R	RR	S	SS	TT	U	V	W	Y	Z
TP1030	80	1864	544	1320	348	1898	1301	597	464	504	710	185	660	660	845	M16	651	460	1000	460	936	200	265	736	80	587	1092	322	1175	372	330
TP1030	100	1864	544	1320	348	1914	1317	597	464	504	710	185	660	660	845	M16	651	460	1000	460	842	200	265	642	80	587	1092	382	1175	372	330
TP1050	80	1864	544	1320	348	1898	1301	597	489	539	710	185	660	660	845	M16	651	460	1000	460	936	200	265	736	80	587	1092	322	1175	408	330
TP1050	100	1864	544	1320	348	1914	1317	597	489	539	710	185	660	660	845	M16	651	460	1000	460	842	200	265	642	80	587	1092	382	1175	408	330
TP1080	100	1864	544	1320	348	1914	1317	597	514	564	710	185	660	660	845	M16	651	460	1000	460	842	200	265	642	80	587	1092	382	1175	408	330
TP1080	125	1864	544	1320	348	1946	1349	597	514	564	710	185	660	660	845	M16	651	460	1000	460	954	200	265	754	80	587	1192	480	1175	408	330

Performance curves

TP1030

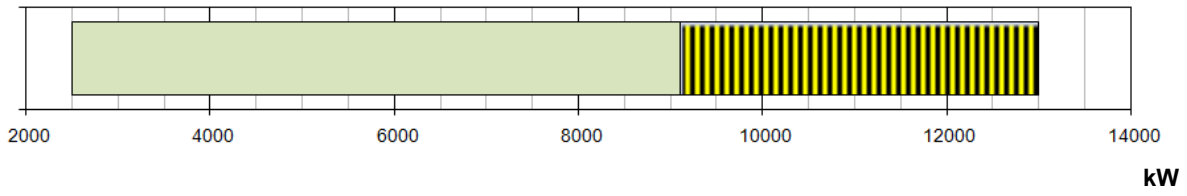

TP1050

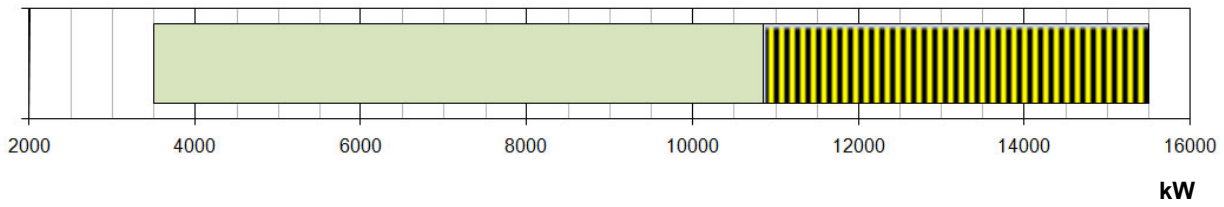

TP1080

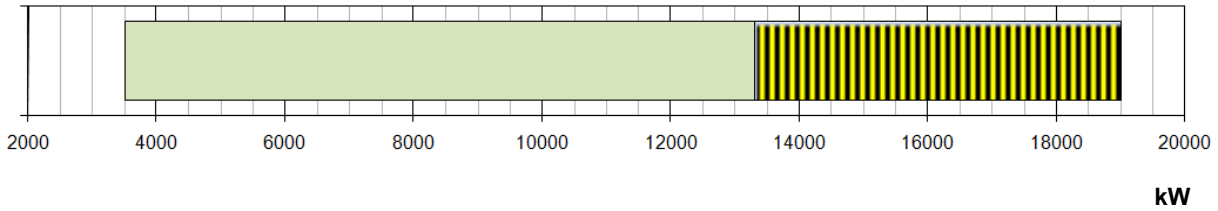

Performance range

To get the input in kcal/h, multiply value in kW by 860.
Data are referred to standard conditions: 1013mbar, 15°C.

Pressure in the network / gas rate curves

TP1030

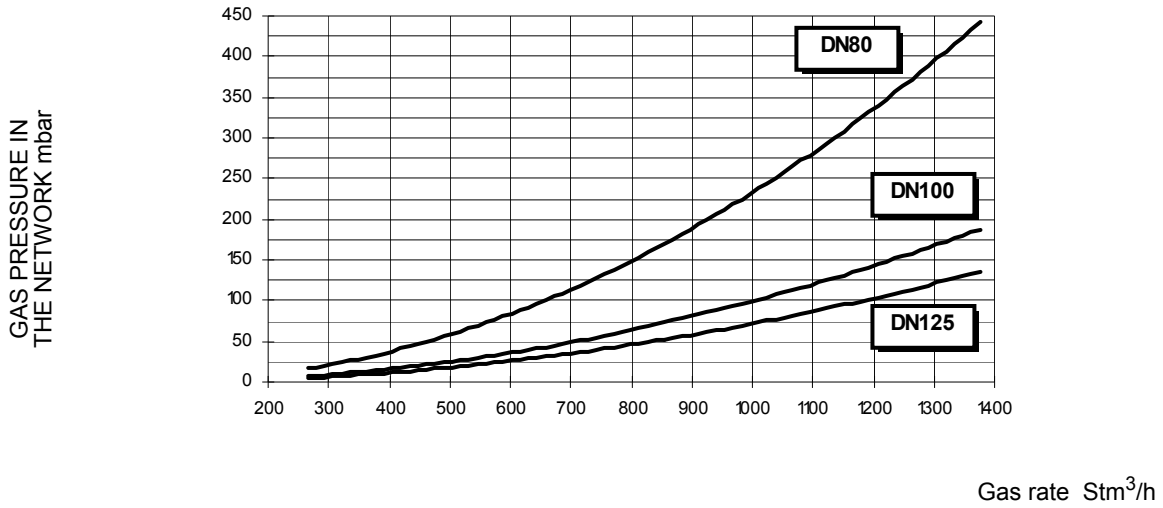

TP1050

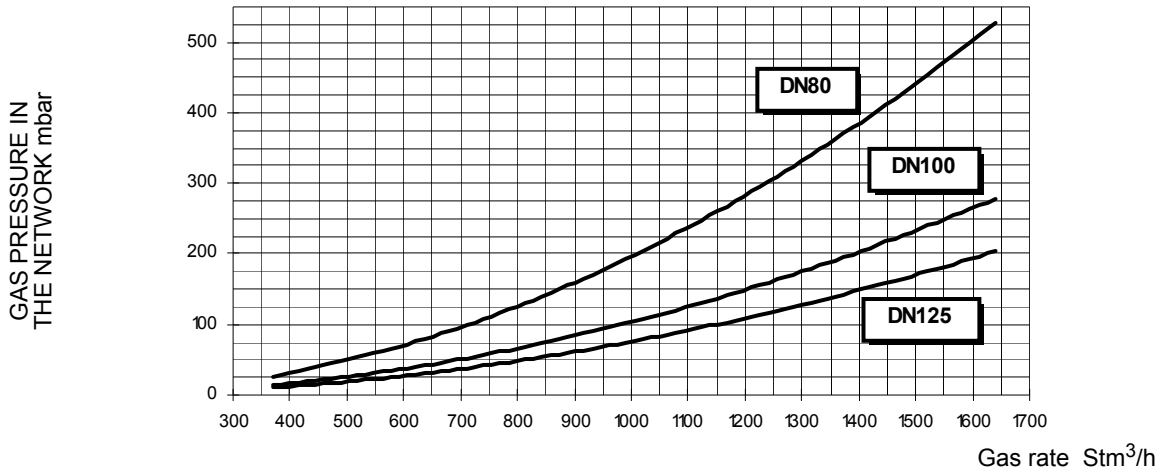

TP1080

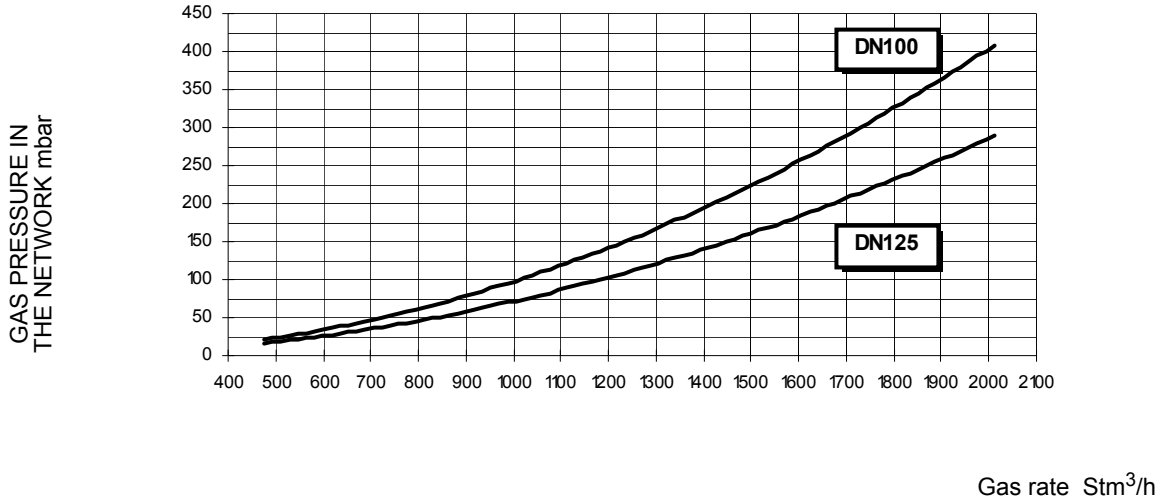

PART II: INSTALLATION

MOUNTING AND CONNECTING THE BURNERINSTALLATION

Packing

The burners are despatched in wooden crates whose dimensions are:
TP1030 - TP1050: 2180mm x 1580mm x 1210mm (L x P x H)
TP1080: 2180mm x 1580mm x 1560mm (L x P x H)
Packing cases of this type are affected by humidity and are not suitable for stacking.
The following are placed in each packing case:

1 burner with gas train detached;
1 gasket to be inserted between the burner and the boiler;
1 envelope containing this manual.

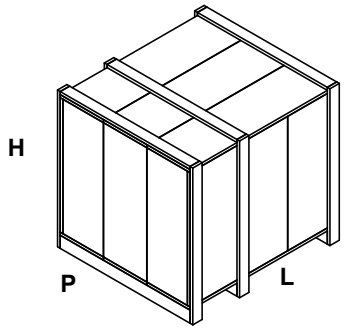

To get rid of the burner's packing, follow the procedures laid down by current laws on disposal of materials.

Handling the burner

⚠	**ATTENTION! Handling operations must be performed by trained personnel specialised on handling loads. If these operations are not carried out correctly, the residual risk for the machine to overturn and fall down remains.**
	To handle the machine, use means suitable to handle requested loads (see par. "Technical specifications").

The burner is provided with eye-bolts for lifting.

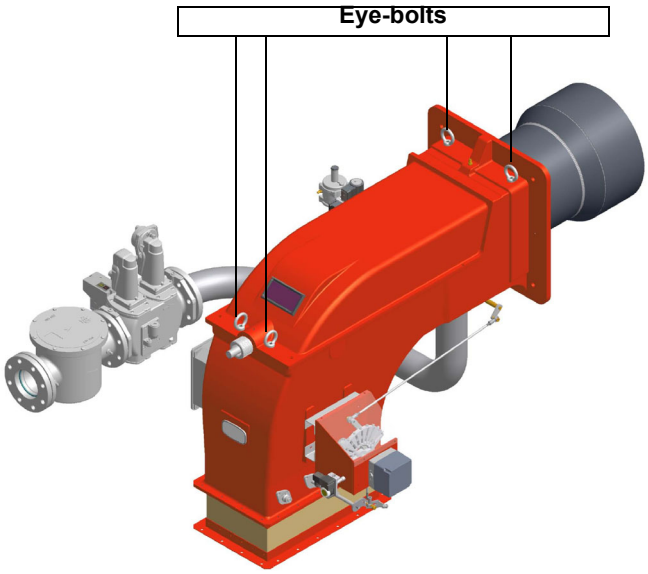

Fitting the burner to the boiler

1 To perform the installation, it is necessary to drill the boiler door as described on paragraph “Overall dimensions”;
2 screw the studbolts (5) on the boiler door, according to the drilling plate (see paragraph “Overall dimensions”);
3 move the burner towards the boiler: lift the burner by means of the eyebolts placed on its top side;
4 remove the balst tube, by loosening the three screws beside the burner flange;
5 place the the ceramic fibre plait on the burner flange;
6 replace the blast tube: before fastening completely the screws, avoid any misalignement between the blast tube axis and the combustion head axis;
7 install the burner to the boiler;
8 fix the burner to the stud bolts, by means of the fixing nuts, according to Fig. 1.
9 After fitting the burner to the boiler, ensure that the gap between the blast tube and the refractory lining is sealed with appropriate insulating material (ceramic fibre cord or refractory cement).

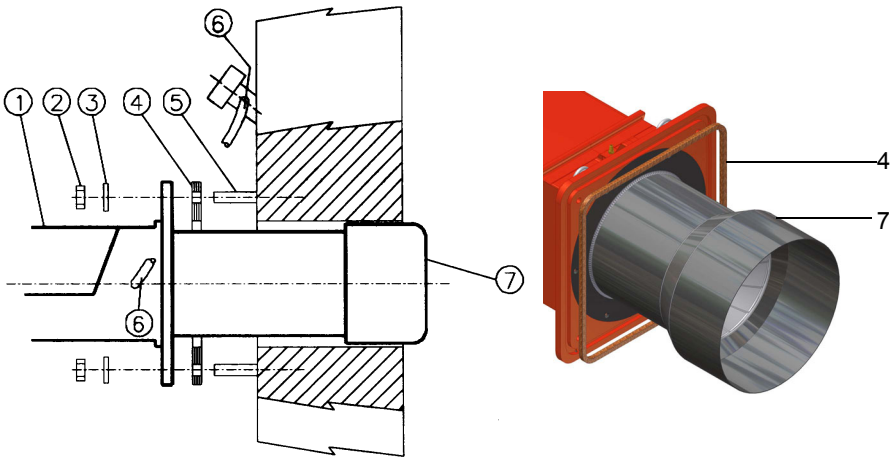

Fig. 1

Keys

1 Burner
2 Fixing nut
3 Washer
4 Ceramic fibre plait
5 Stud bolt
7 Blast tube

Fan installation

Pay attention when designing the air duct: dimensioning must be performed according to the flow rate, the temperature, the distance between the fan and the burner and according to the fan features as well.

⚠	**ATTENTION!** The bellows unit provided is made of canvas and is provided with blocking spacers to avoid breaking it during installation: **first** place the bellows unit between flanges, **then** remove the spacers. Canvas has to be stretched after the installation, but not stressed.

Matching the burner to the boiler

To correctly match the burner to the boiler verify the necessary input and the pressure in combustion chamber are included in the burner performance curve; otherwise the choice of the burner must be revised consulting the burner manufacturer.

To choose the blast tube lenght follow the instructions of the boiler manufacturer. In absence of these consider the following:

- Cast-iron boilers, three pass flue boilers (with the first pass in the rear part): the blast tube must protrude no more than 100 mm into the combustion chamber.
- Pressurised boilers with flame reversal: in this case the blast tube must penetrate at least 50 - 100 mm into combustion chamber in respect to the tube bundle plate.

The length of the blast tubes does not always allow this requirement to be met, and thus it may be necessary to use a suitably-sized spacer to move the burner backwards.

GAS TRAIN CONNECTIONS

The diagrams show the components of the gas trai included in the delivery and which must be fitted by the installer.The diagrams are in compliance with the current laws.

⚠	**ATTENTION:** BEFORE EXECUTING THE CONNECTIONS TO THE GAS PIPE NETWORK, BE SURE THAT THE MANUAL CUTOFF VALVES ARE CLOSED.

Gas train - 3: Gas train with valves group VGD 20/40 with built-in gas pressure governor + PGCP

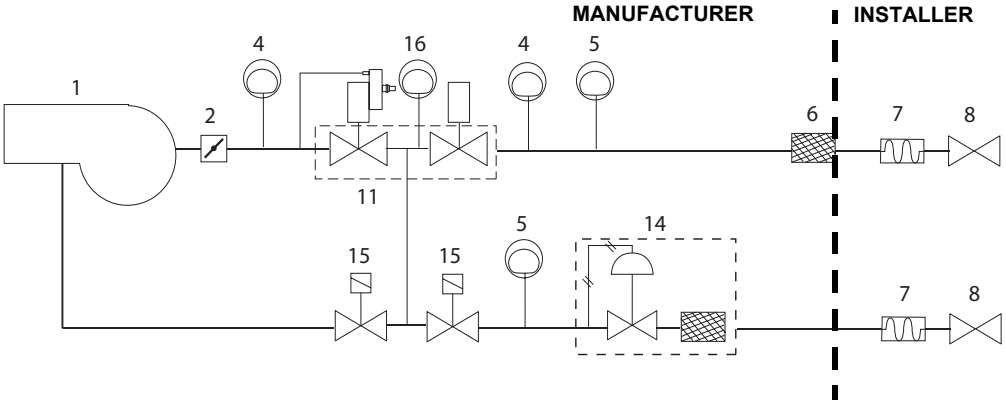

Key

1	Burner	8	Manual cutoff valve
2	Butterfly valve	11	VGD Valves group
4	Maximum gas pressure switch (optional)	14	Pressure governor with filter
5	Minimum gas pressure switch	15	Pilot gas valve
6	Gas filter	16	PGCP (leakage control pressure switch)
7	Bellow joint		

Pilot burner mounting

The pilot gas train is already installed to the burner, the following connections must be executed:

- connection from the filter with stabiliser to the gas supply network
- connection from the valve to the main gas train, by means of the pipe provided with the burner.

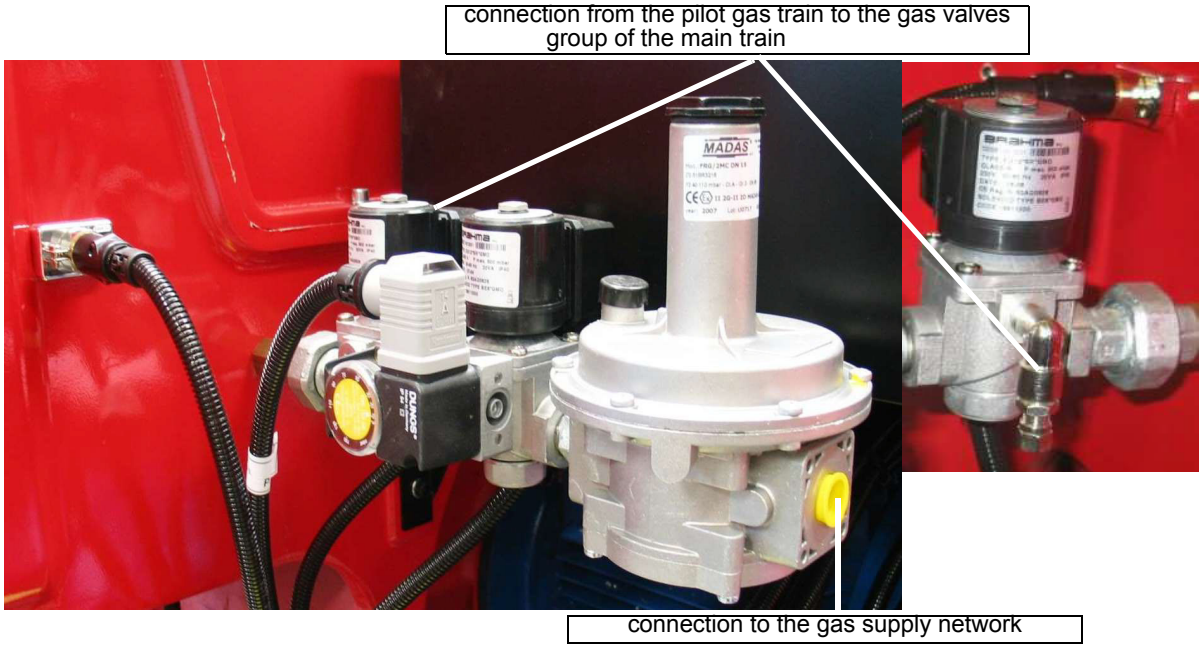

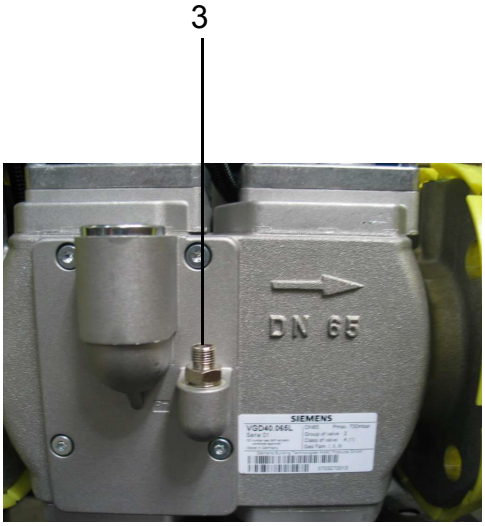

SIEMENS VGD40..

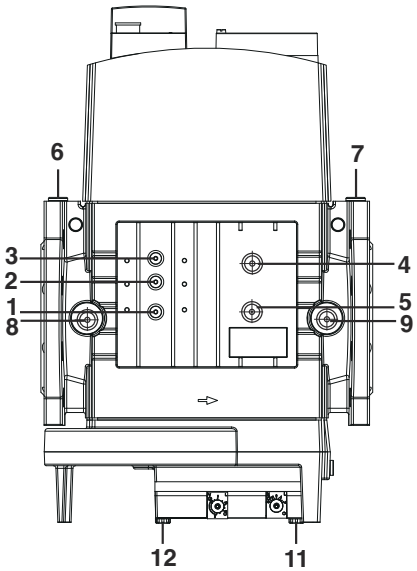

DUNGS MBC3100-5000SE

Fig. 2 - pipe port (3) for connecting the pilot gas train to the valves group of the main gas train

-

MultiBloc MBE

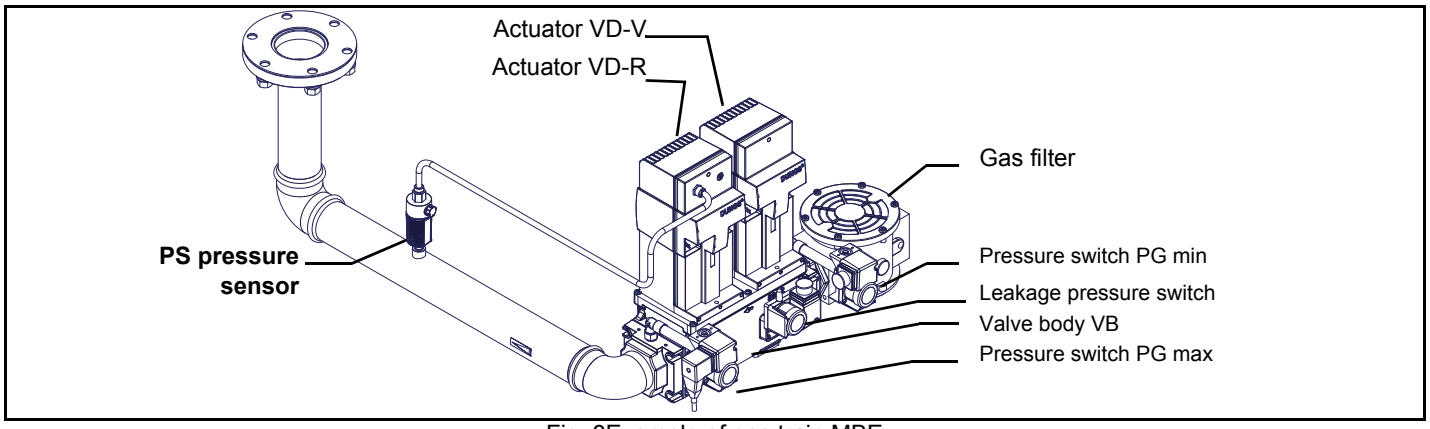

Fig. 3Example of gas train MBE

To mount the gas train, proceed as follows:

1-a) in case of threaded joints: use proper seals according to the gas used;

1-b) in case of flanged joints: place a gasket (no. 1A..1E - Fig. 4) between the elements;

2) fasten all the items by means of screws, according to the diagrams showed, observing the mounting direction for each item;

NOTE: the bellows unit, the manual cutoff valve and the gaskets are not part of the standard supply.

ATTENTION: once the gas train is mounted according to the diagram on Fig. 4, the gas proving test mus be performed, according to the procedure set by the laws in force.

ATTENTION: it is recommended to mount filter and gas valves to avoid that extraneous material drops inside the valves, during maintenance and cleaning operation of the filters (both the filters outside the valves group and the ones built-in the gas valves).

WARNING: Slowly open the fuel cock to avoid breaking the pressure regulator.

Threaded train with MultiBloc MBE - Mounting

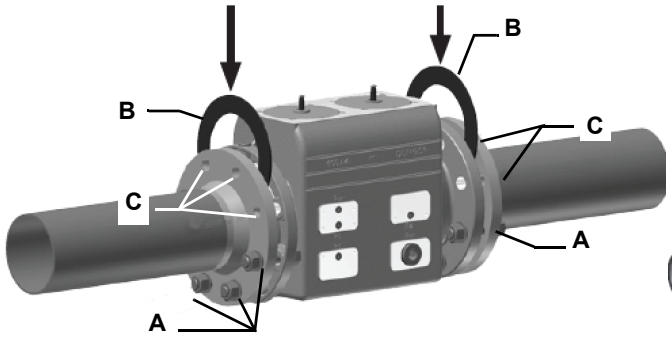

1. Insert studs A.
2. Insert seals B.
3. Insert studs C.
4. Tighten studs in accordance with section 8.

<u>Ensure correct position of the seal!</u>

5. Perform leak and functional tests after mounting.
6. Screws (4xM5x20) for VD assembly are supplied.

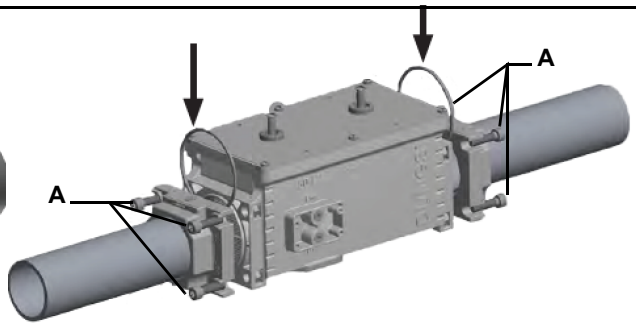

1. Mount flange into pipe systems. Use appropriate sealing agent.
2. Insert VB together with supplied O-rings.

Check current position of O-rings.

3. Tighten supplied screws (8xM8x30) in accordance with section 8.
4. Screws (4xM5x25) for VD assembly are supplied.
5. After installation, perform leakage and functional test.
6. Disassembly in reverse order.

Fig. 4

Mounting position MBE / VB / VD

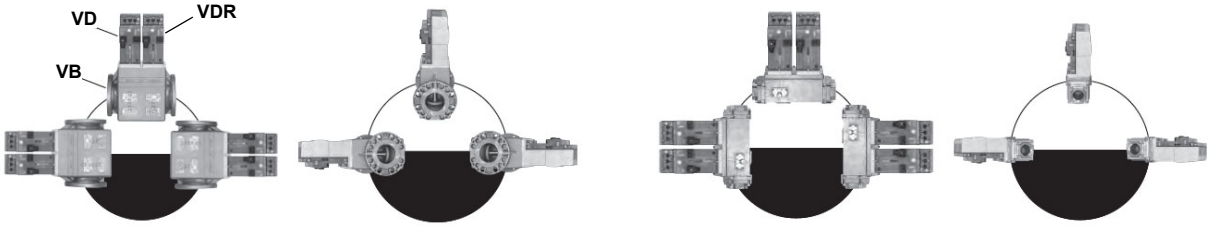

Fig. 5

Mounting VD-R & PS-...

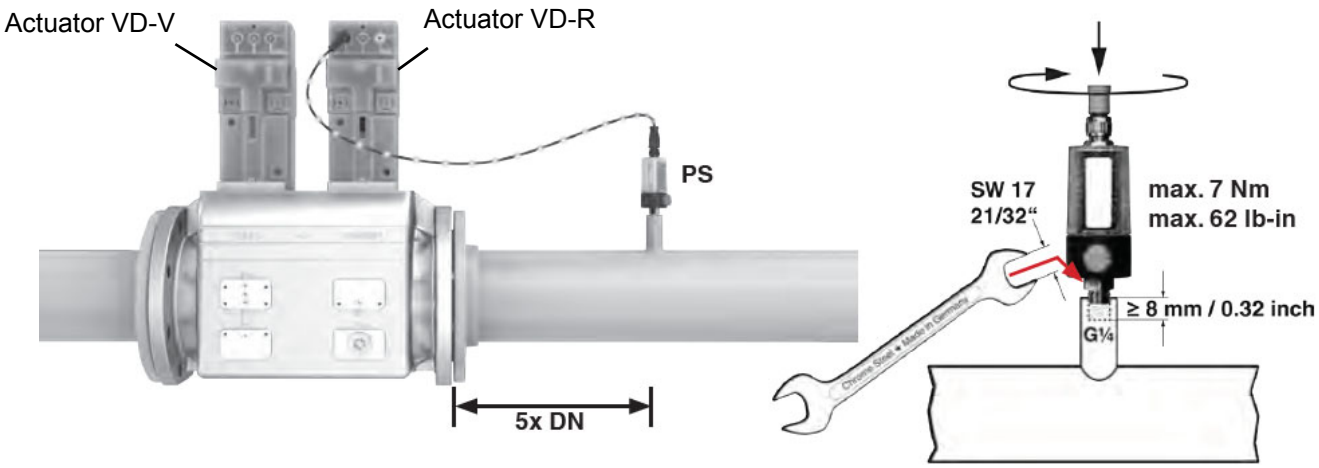

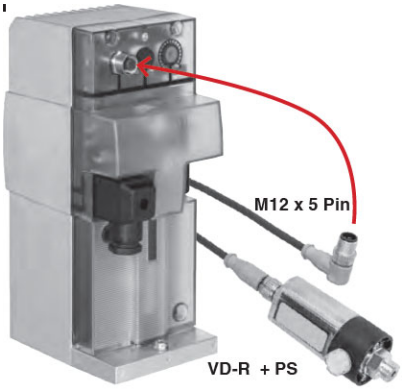

1. Gas pressure regulation is possible with VD-R and PS pressure sensor only.

WARNING!!!!. For US/CN installation, the output pressure must be monitoried by min. and max. pressure switches set to +/- 20% of the setpoint.

2. Mounting on pipe. Sensor position: 5x DN according to MBE. Pipe fitting with female thread size ¼, mount sensor with seal, observe torque.
3. The pressure sensor includes a vent limiter according to UL 353 and ANSI Z21.18/CSA 6.3. No venting required in locations where vent limiters are accepted by the jurisdiction.
4. Only PS pressure sensors specified by DUNGS are authorised to be connected to the VD-R's M12 interface.
5. Only PS cables specified by DUNGS are authorised to be used to connect the PS to the VD-R. Max. cable length 3 m.

- The actuator **VD-V** does not need any adjustment (funzione ON-OFF)
- The actuator **VD-R** It must be combined with the **PS** sensor (include regolatore di pressione)
- The **PS sensor** chosen based on the necessary pressure (there are 3 models)

Fig. 6

Siemens VGD20.. e VGD40..

Siemens VGD20.. and VGD40.. gas valves - with SKP2.. (pressure governor)

- Connect the reference gas pipe (**TP** in figure; 8mm-external size pipe supplied loose), to the gas pressure nipples placed on the gas pipe, downstream the gas valves: gas pressure must be measured at a distance that must be at least 5 times the pipe size.
- Leave the blowhole free (**SA** in figure). Should the spring fitted not permit satisfactory regulation, ask one of our service centres for a suitable replacement.

Caution: the SKP2 diaphragm D must be vertical (see Fig. 1).

WARNING: removing the four screws BS causes the device to be unserviceable!

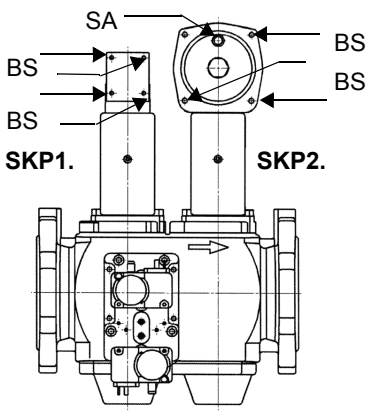

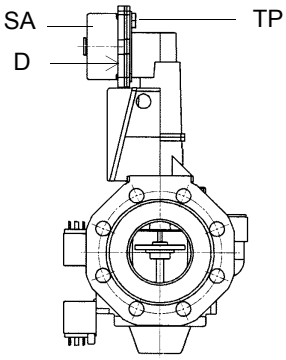

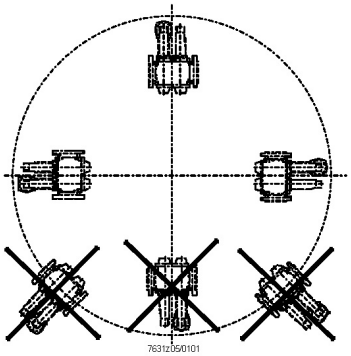

SIEMENS VGD..MOUNTING POSITIONS

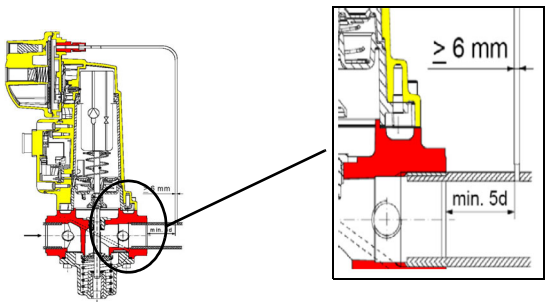

Siemens VGD valves with SKP actuator:
The pressure adjusting range, upstream the gas valves group, changes according to the spring provided with the valve group.

Fig. 7

Gas valveversion with SKP2 (built-in pressure stabilizer)

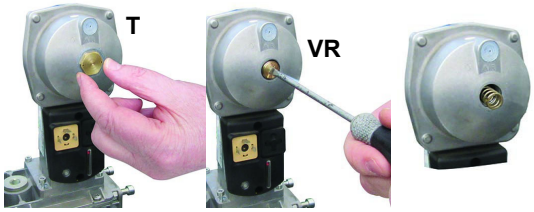

To replace the spring supplied with the valve group, proceed as follows:
- Remove the cap (T)
- Unscrew the adjusting screw (VR) with a screwdriver
- Replace the spring

Stick the adhesive label for spring identification on the type plate.

Performance range (mbar)	0 - 22	15 - 120	100 - 250
Spring colour	**neutral**	**yellow**	**red**

Gas Filter (if provided)

The gas filters remove the dust particles that are present in the gas, and prevent the elements at risk (e.g.: burner valves, counters and regulators) from becoming rapidly blocked. The filter is normally installed upstream from all the control and on-off devices.

ATTENTION: it is reccomended to install the filter with gas flow parallel to the floor in order to prevent dust fall on the safety valve during maintenance operation.

Once the train is installed, connect the gas valves group and pressure switches plugs.

PART III: MAINTENANCE

OPERATION

⚠	***ATTENTION:*** **before starting the burner up, be sure that the manual cutoff valves are open and check that the pressure upstream the gas train complies the value quoted on paragraph "Technical specifications". Read carefully the "WARNINGS" chapter in this manual.**

- Choose the typer of fuel by turning the **A** switch, on the burner control panel.
  CAUTION: if the fuel chosen is light oil, be sure the cutoff valves on the feed and return pipes are open.
- Check the control box is not locked (signalling light **O**, on); if so, reset it by means of the pushbutton **C**.
- Check the series of thermostats and pressure switches turn the burner to on.

Gas operation

- Check the gas feeding pressure is sufficient (signalling lamp **G** on).
- the gas proving system test begins; when the test is performed the proving system LED turns on. At the end of the test, the burner staring cycle begins: in case of leakage in a valve, the gas proving system stops the burner and the lamp **E** turns on. Reset it, by means of the reset pushbutton on the device, in burners with VPS504 (pushbutton **LB** in picture), or by the **D** pushbutton on the burner panel if this one is fitted with LDU11 proving system.

NOTE: if the burner is fitted with Dungs VPS504, the pre-purgue phase starts once the gas proving system is successfully performed. Since the pre-purgue phase must be carried out with the maximum air rate, the control box drives the actuator opening and when the maximum opening position is achieved, the pre-purge time counting starts.

- At the end of the pre-purge time, the actuator drives the complete closing (ignition with gas position) and, as this is achieved the ignition transformer is energised (LED **L** is on); the gas valves open.
- Few seconds after the valves opening, the transformer is de-energised and lamp **L** turns off.
- The burner is now operating, meanwhile the actuator goes to the high flame position and, after some seconds, the two-stage operation begins; the burner is driven automatically to high flame or low flame, according to the plant requirements.

Operation in high or low flame is signalled by lamp **N** on the frontal panel.

At least once a year carry out the maintenance operations listed below. In the case of seasonal servicing, it is recommended to carry out the maintenance at the end of each heating season; in the case of continuous operation the maintenance is carried out every 6 months.

Fully-modulating burners

.To adjust the fully-modulating burners, use the **CMF** switch on the burner control panel (see next picture), instead of the **TAB** thermostat as described on the previous paragraphs about the progressive burners. Go on adjusting the burner as described before, paying attention to use the CMF switch intead of **TAB**.

The **CMF** position sets the oprating stages: to drive the burner to the high-flame stage, set CMF=1; to drive it to the low-flame stage, set CMF=2.

CMF

CMF = 0 stop at the current position
CMF = 1 high flame operation
CMF = 2 low flame operation
CMF = 3 automatic operation

Adjustment procedure

Actuator cams (Siemens SQM40)

I	High flame
II	Stand-by
III	Low flame - gas
VI	Ignition - gas

To change the burner setting during the testing in the plant, follow the next procedure.

1 Before starting the burner up, drive the high flame actuator microswitch matching the low flame one (in order to let the burner operates at the lowest output) to safely achieve the high flame stage.

2 cam IV (stroke limitation cam) must be set a little higher than the cam III to limit the output in the first seconds the flame appears;

NOTE: cam IV must shift according to cam III.

3 Turn the burner on by means of its main switch : if the burner locks press the RESET button on the control panel - see chapter "OPERATION".;

4 Start the burner up by means of the thermostat series and wait until the pre-purge time comes to an end and the burner starts up;

5 drive the burner to high flame stage, by means fo the thermostat **TAB**.

6 Then move progressively the microswitch to higher values until it reaches the high flame position; always check the combustion values and eventually adjusting the gas by means of the valves group governor.

7 go on adjusting air and gas flow rates: check, continuosly, the flue gas analisys, as to avoid combustion with little air; dose the air according to the gas flow rate change following the steps quoted below;

8 acting on the pressure stabiliser of the valves group, adjust the **gas flow rate in the high flame stage** as to meet the values requested by the boiler/utilisation:

- Siemens VGD valves group: remove cap **T** and act on the **VR** adjusting screw to increase or decrease the pressure and consequently the gas rate; screwind **VR** the rate increases, unscrewing it decreases (see next figure).

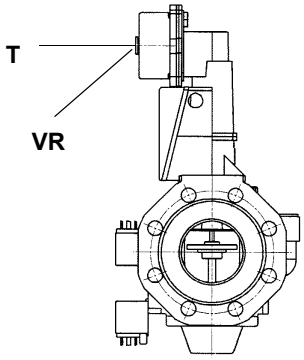

Siemens VGD..

9 To adjust the **air flow rate in the high flame stage**, loose the **RA** nut and screw **VRA** as to get the desired air flow rate: moving the rod **TR** towards the air damper shaft, the air damper opens and consequently the air flow rate increases, moving it far from the shaft the air damper closes and the air flow rate decreases.

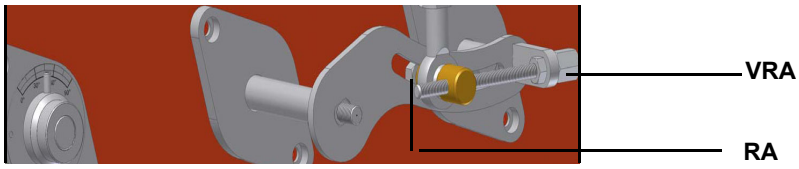

Note: once the procedure is perfomed, be sure that the blocking nut **RA** is fasten. Do not change the position of the air damper rods.

10 Only if necessary, change the combusiton head position: to let the burner operate at a lower output, loose the **VB** screw and move progressively back the combustion head towards the MIN position, by turning clockwise the **VRT** ring nut. Fasten **VB** screw when the adjustment is accomplished.

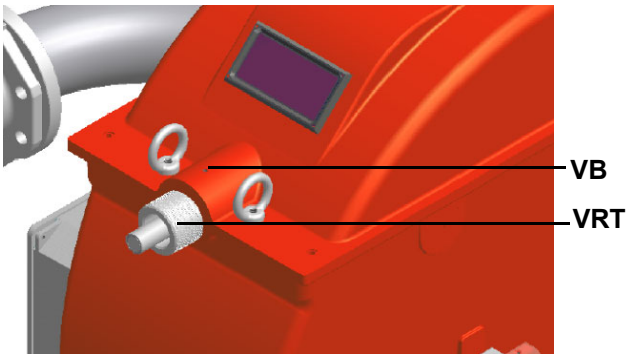

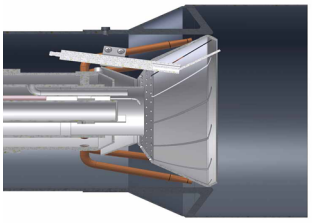

"MAX"head position

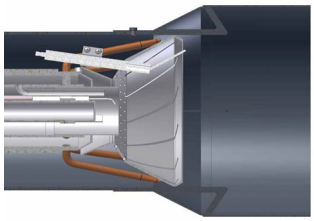

head position

Attention! if it is necessary to change the head position, repeat the air and gas adjustments described above.

11 the air and gas rate are now adjusted at the maximum power stage, go on with the point to point adjustement on the **SV** adjusting cam as to reach the minimum output point.

12 as for the point-to-point regulation, move the gas low flame microswitch (cam III) a little lower than the maximum position (90°);

13 set the **TAB** thermostat to the minimum in order that the actuator moves progressively towards the low flame position;

14 move cam III to the minimum to move the actuator towards the low flame until the two bearings find the adjusting screw that refers to the lower position: screw **V** to increase the rate, unscrew to decrease.

15 Move again cam III towards the minimum to meet the next screw on the adjusting cam and repeat the previous step; go on this way as to reach the desired low flame point.

16 Now adjust the pressure switches (see next par.).

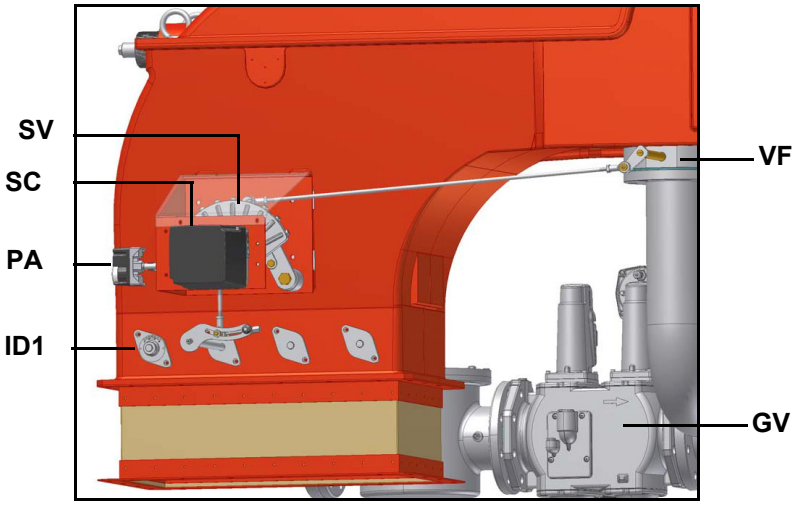

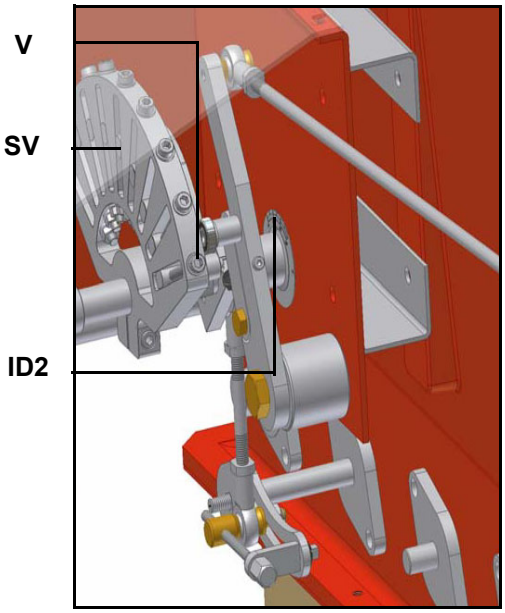

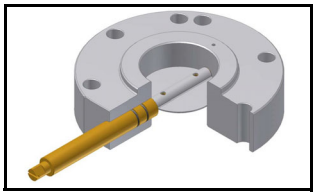

Gas butterfly valve closed

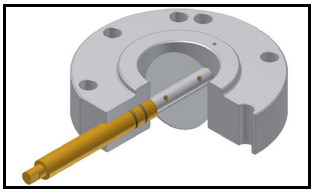

Gas butterfly valve open

MultiBloc MBE

Regulation VD-R whith PS

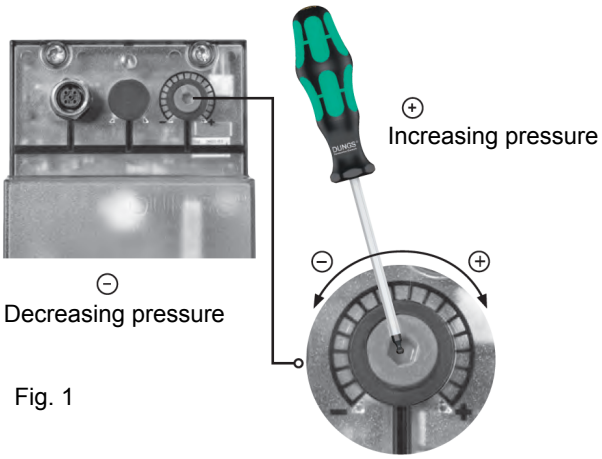

Fig. 1

Setting scale is „Not“ linear! Various sensors available. Output pressure according to sensor‘s measuring range.

Adjust the outlet pressure to the value specified by the burner or equipment manufacturer!

While making outlet pressure adjustments, do not exceed a value that creates a hazardous condition to the burner!

ATTENTION: To set the outlet pressure of the VD-R regulator, act on the adjustment ring nut (Fig. 10)

The position of the indicator in the dial indicates the value of the outlet pressure calculated as a percentage of the full scale of the PS sensor (Fig. 11)

Outlet pressure	MIN	10%	25%	50%	75%	MAX
PS-10/40	4 mbar 0,4 kPa 2 "w.c.	10 mbar 1,0 kPa 4 "w.c.	25 mbar 2,5 kPa 10 "w.c.	50 mbar 5,0 kPa 20 "w.c.	75 mbar 7,5 kPa 30 "w.c.	100 mbar 10,0 kPa 40 "w.c.
PS-50/200	20 mbar 2,0 kPa 8 "w.c.	50 mbar 5,0 kPa 20 "w.c.	125 mbar 12,5 kPa 50 "w.c.	250 mbar 25,0 kPa 100 "w.c.	375 mbar 37,5 kPa 150 "w.c.	500 mbar 50,0 kPa 200 "w.c.

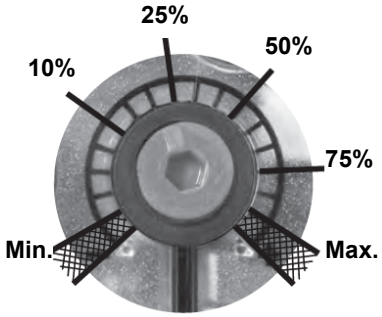

Fig. 2

Adjusting output pressure for positive pressure systems (requires PS-10/40 or PS-50/200):

Pressure taps MultiBloc MBE

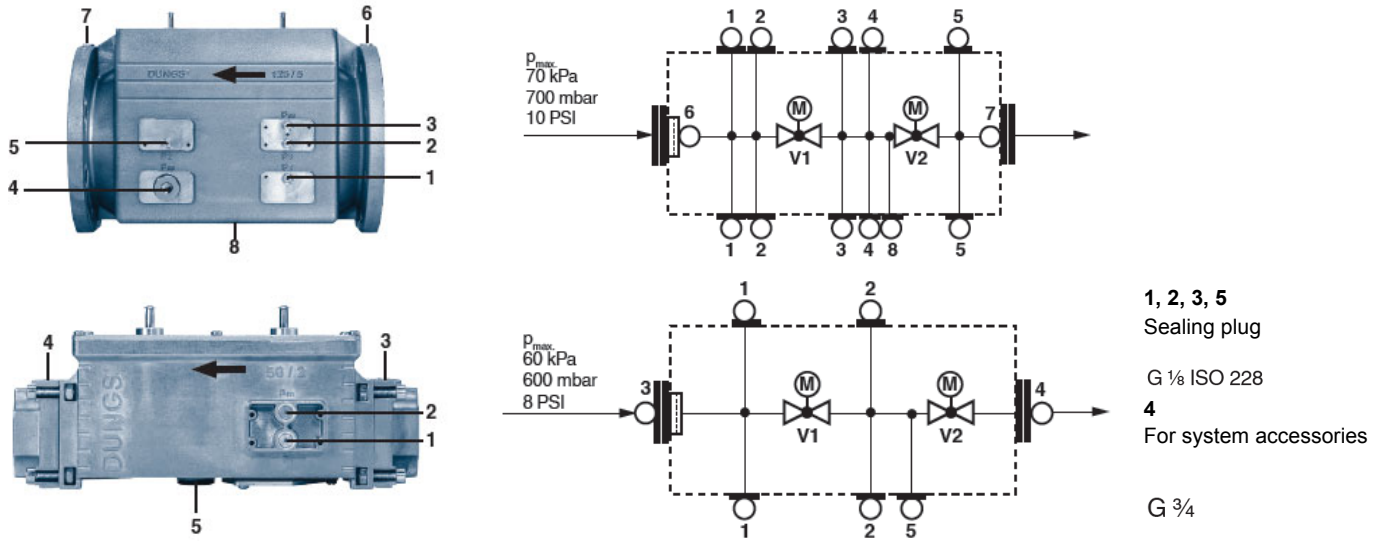

1, 2, 3, 5
Sealing plug

G ⅛ ISO 228

4
For system accessories

G ¾

Fig. 3

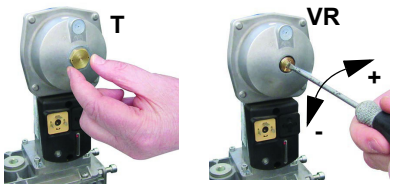

Gas valveversion with SKP2 (built-in pressure stabilizer)

To increase or decrease gas pressure, and therefore gas flow rate, remove the cap **T** and use a screwdriver to adjust the regulating screw **VR**. Turn clockwise to increase the flow rate, counterclockwise to reduce it.

Collagamento del pilota alla valvola MBE

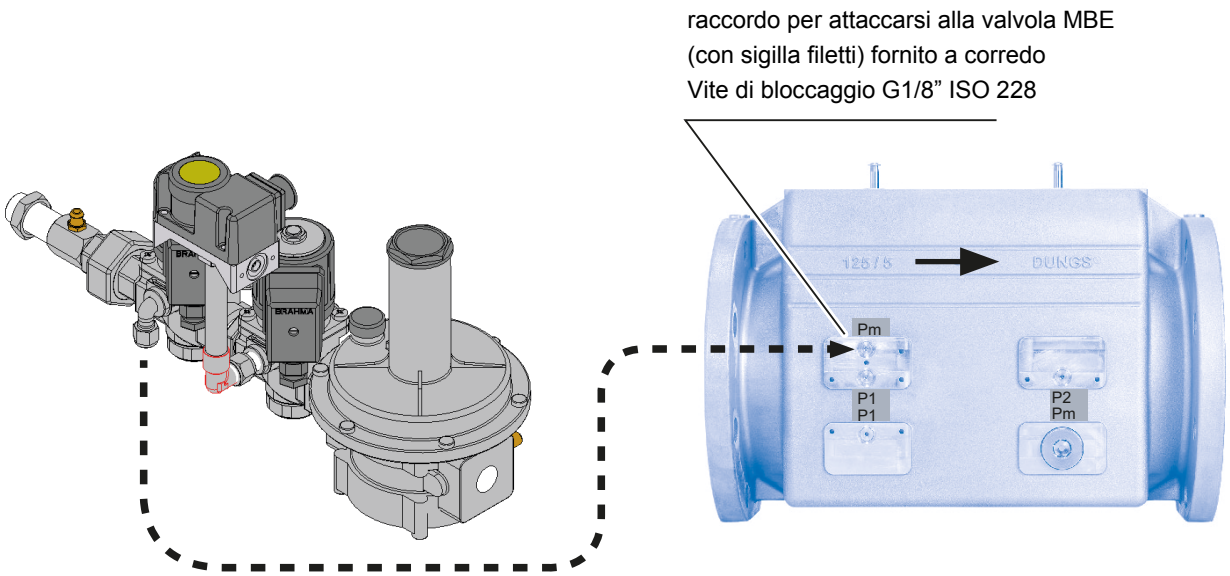

Calibration air and gas pressure switches

The **air pressure switch** locks the control box if the air pressure is not the one requested. If it happens, unlock the burner by means of the control box unlock pushbutton, placed on the burner control panel.

The **gas pressure switches** check the pressure to avoid the burner operate when the pressure value is not in the requested pressure range.

Calibration of low gas pressure switch

As for the gas pressure switch calibration, proceed as follows:

- Be sure that the filter is clean.
- Remove the transparent plastic cap.
- While the burner is operating at the maximum output, test the gas pressure on the pressure port of the minimum gas pressure switch.
- Slowly close the manual cutoff valve (placed upstream the pressure switch, see gas train installation diagram), until the detected pressure is reduced by 50%. Pay attention that the CO value in the flue gas does not increase: if the CO values are higher than the limits laid down by law, slowly open the cutoff valve as to get values lower than these limits.
- Check that the burner is operating correctly.
- Clockwise turn the pressure switch adjusting ring nut (as to increase the pressure value) until the burner stops.
- Slowly fully open the manual cutoff valve.
- Refit the transparent plastic cover on the pressure switch.

Calibration the maximum gas pressure switch (when provided)

To calibrate the maximum pressure switch, proceed as follows according to its mounting position:

- remove the pressure switch plastic cover;
- if the maximum pressure switch is mounted upstreaam the gas valves: measure the gas pressure in the network, when flame is off; by means of the adjusting ring nut **VR**, set the value read, increased by the 30%.
- if the maximum pressure switch is mounted downstream the “gas governor-gas valves” group and upstream the butterfly valve: light the burner, adjust it according to the procedure in the previous paragrph. Then, measure the gas pressure at the operating flow rate, downstream the “gas governor-gas valves” group and upstream the butterfly valve; by means of the adjusting ring nut **VR**, set the value read on step 2, increased by the 30%;
- replace the plastic cover.

Calibration of air pressure switch

To calibrate the air pressure switch, proceed as follows:

- Remove the transparent plastic cap.
- Once air and fuel setting have been accomplished, startup the burner.
- During the pre-purge phase o the operation, turn slowly the adjusting ring nut **VR** in the clockwise direction (to increase the adjusting pressure) until the burner lockout, then read the value on the pressure switch scale and set it to a value reduced by 15%.
- Repeat the ignition cycle of the burner and check it runs properly.
- Refit the transparent plastic cover on the pressure switch.

Calibration gas leakage pressure switch (PGCP)

- remove the pressure switch plastic cover;
- adjust the PGCP pressure switch to the same value set for the minimum gas pressure switch;
- replace the plastic cover.

Adjusting the combustion head

Attention! if it is necessary to change the head position, repeat the air and fuel adjustments described above.

Only if necessary, change the combusiton head position: to let the burner operate at a lower output, loose the **VB** screw and move progressively back the combustion head towards the MIN position, by turning clockwise the **VRT** ring nut. Fasten **VB** screw when the adjustment is accomplished.

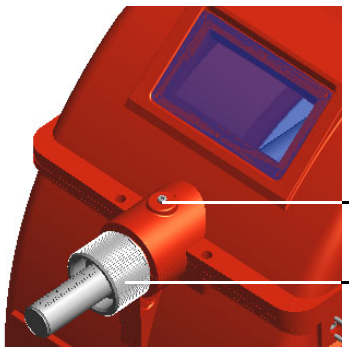

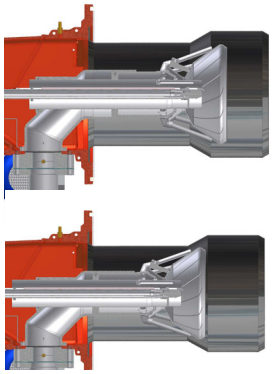

“MAX” head position

”MIN” head position

CAUTION: perform these adjustments once the burner is turned off and cooled.

Center head holes gas flow regulation (natural gas burners)

To adjust the gas flow, partially close the holes, as follows:

1 loosen the three **V** screws that fix the adjusting plate **D**;
2 insert a screwdriver on the adjusting plate notches and let it move CW/CCW as to open/close the holes;
3 once the adjustmet is performed, fasten the **V** screws.

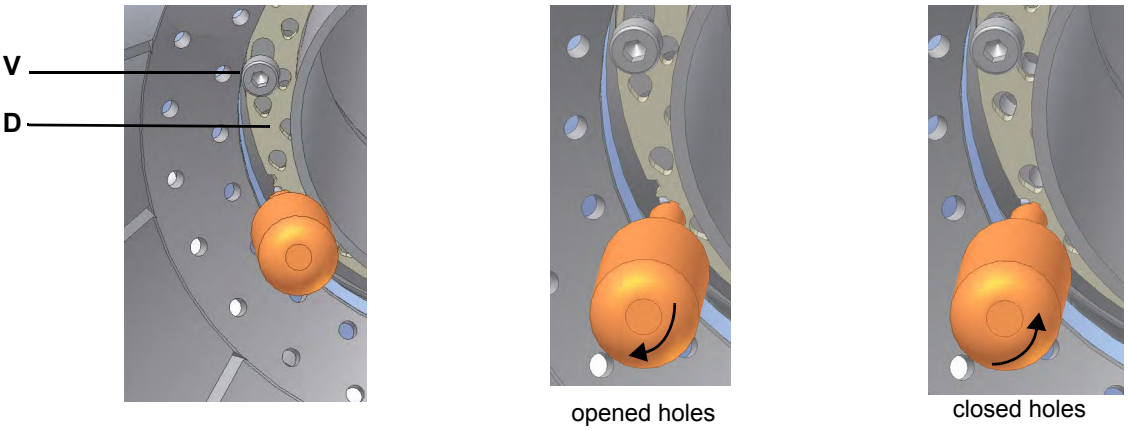

The adjusting plate correct position must be regulated in the plant during the commissioning.

The factory setting depends on the type of fuel for which the burner is designed:

- For natural gas burners, plate holes are fully opened

Center head holes gas flow regulation (LPG burners)

To adjust the gas flow, partially close the holes, as follows:

1 loosen the three **V** screws that fix the adjusting plate **D**;
2 insert a screwdriver on the adjusting plate notches and let it move CW/CCW as to open/close the holes;
3 once the adjustmet is performed, fasten the **V** screws.

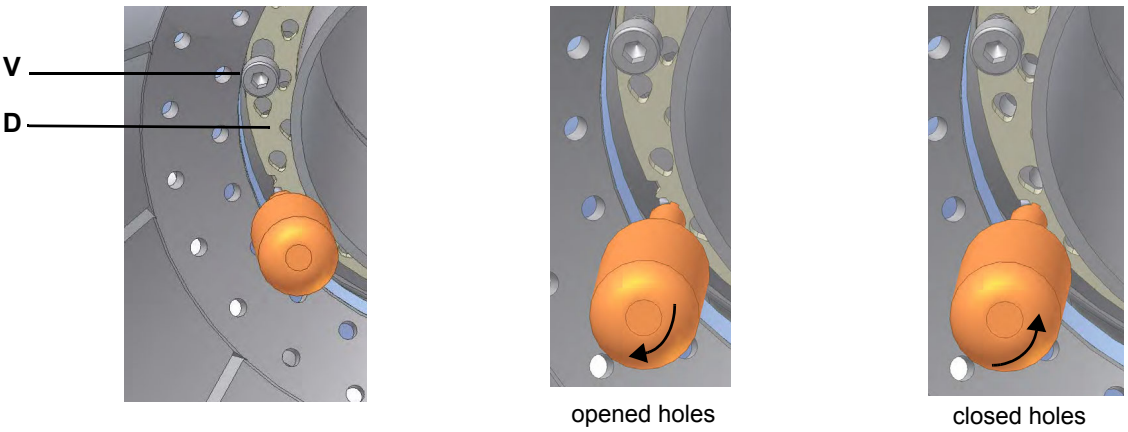

The adjusting plate correct position must be regulated in the plant during the commissioning.

The factory setting depends on the type of fuel for which the burner is designed:

- For LPG burners, plate holes are opened about:
  9xA **series**: 1.5 mm
  5xxA **series**: 1.3 mm

PART IV: MAINTENANCE

WARNING: ALL OPERATIONS ON THE BURNER MUST BE CARRIED OUT WITH THE MAINS DISCONNECTED AND THE FUEL MANAUL CUTOFF VALVES CLOSED!
ATTENTION: READ CAREFULLY THE "WARNINGS" CHAPTER AT THE BEGINNIG OF THIS MANUAL.

At least once a year carry out the maintenance operations listed below. In the case of seasonal servicing, it is recommended to carry out the maintenance at the end of each heating season; in the case of continuous operation the maintenance is carried out every 6 months.

ROUTINE MAINTENANCE

- Clean and examine the gas filter cartridge and replace it if necesssary;
- Remove and clean the combustion head;
- Examine and clean the ignition electrodes, adjust and replace them if necessary;
- Examine and clean the detection electrode/photoelement (according to the burner models), replace it if necessary, in case of doubt, check the detection circuit, after the burner start-up;
- Clean and grease leverages and rotating parts.

DANGER! Incorrect motor rotation can seriously damage property and injure people.ATTENTION: when servicing, if it was necessary to disassemble the gas train parts, remember to execute the gas proving test, once the gas train is reassembled, according to the procedure imposed by the law in force.

Gas filter maintenance

To clean or remove the filter, proceed as follows:

1. remove the cap unscrewing the fixing screws (A);
2. remove the filtering cartridge (B), clean it using water and soap, blow it with compressed air(or replace it, if necessary)
3. replace the cartridge in its proper position taking care to place it inbetween the guides as not to hamper the cap replacement;
4. be sure to replace the "O" ring into its place (C) and replace the cover fastening by the proper screws (A).

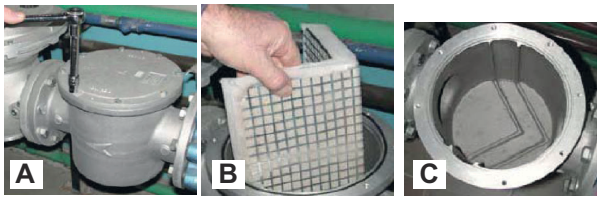

WARNING: Before opening the filter, close the manual cutoff valve downstream the filter and bleed the gas; check that inside the filter there is no pressurised gas.

MultiBloc MBE*MultiBloc VD Mounting*

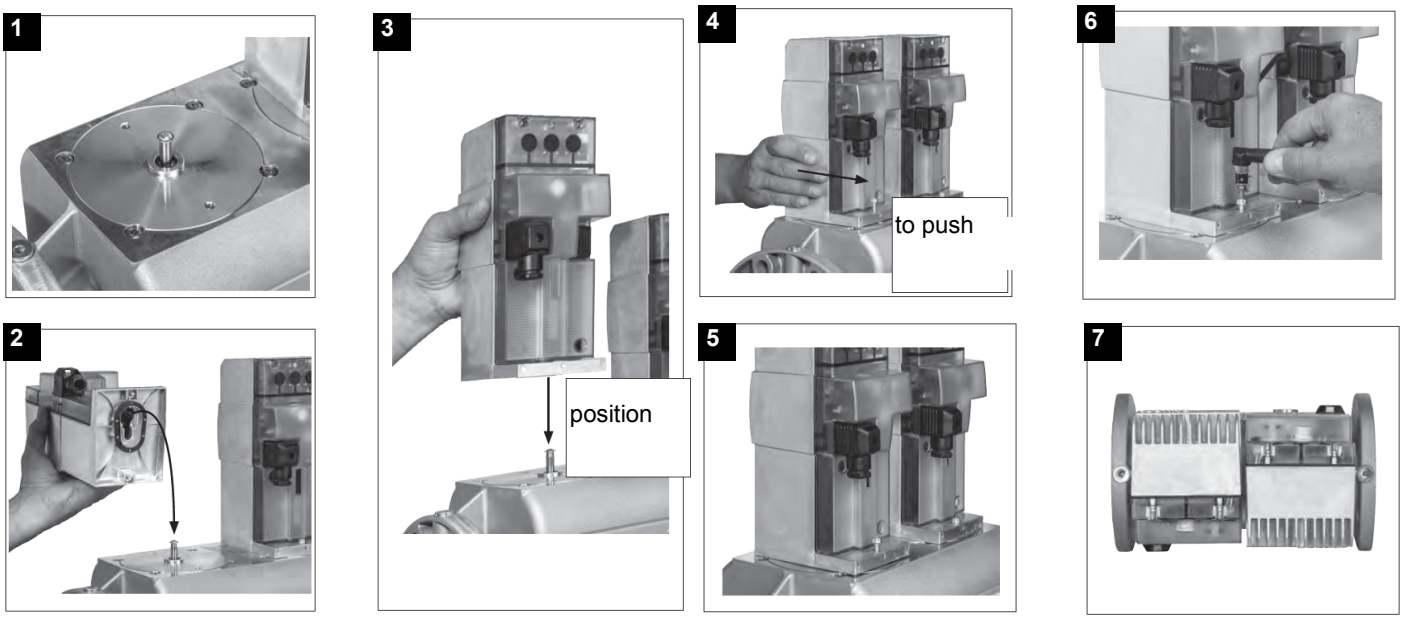

1. Position VD on VB, fig. 2+3.
2. Slide VD forward up to the stop, fig. 4.
3. Screw VD on with 2 M5 screws for each, max. 5 Nm/44 in.-lb., fig. 5/6.
4. VD can be mounted rotated by 180°, fig. 7.

Removing the combustion head

- Remove the cover **C**.
- remove the electrodes cables;
- unscrew the 3 screws **V** which hold in position the gas manifold **G** and pull out the complete group as shown in the picture below.
- Clean the combustion head by a compressed air blow or, in case of scale, scrape it off by a scratchbrush.

Note: to replace the combustion head reverse the procedure described above having care to place correctly the O ring (**OR**) between burner and gas manifold.

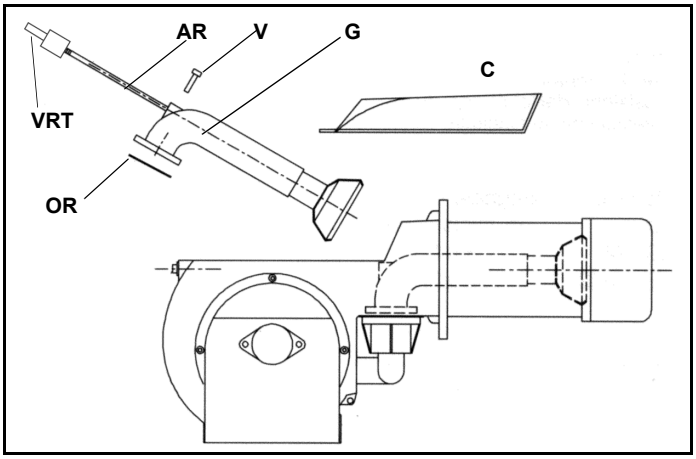

Fig. 1

Key

VRT	Head adjusting screw
AR	Threaded rod
V	Fixing screw
G	Gas manifold
OR	”O” ring
C	Cover

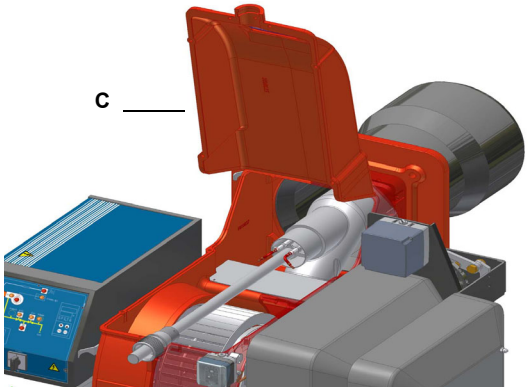

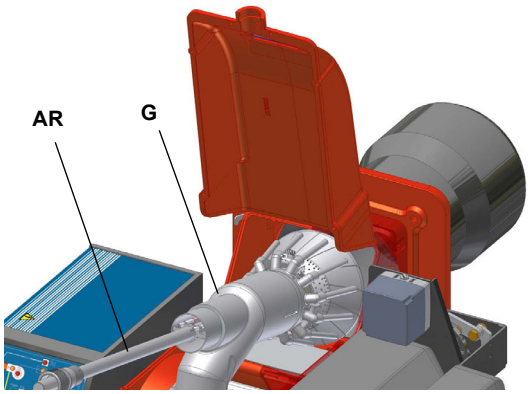

Adjusting the ignition electrode

ATTENTION: avoid the electrode to get in touch with metallic parts (blast tube, head, etc.), otherwise the boiler operation would be compromised. Check the electrode position after any intervention on the combustion head.

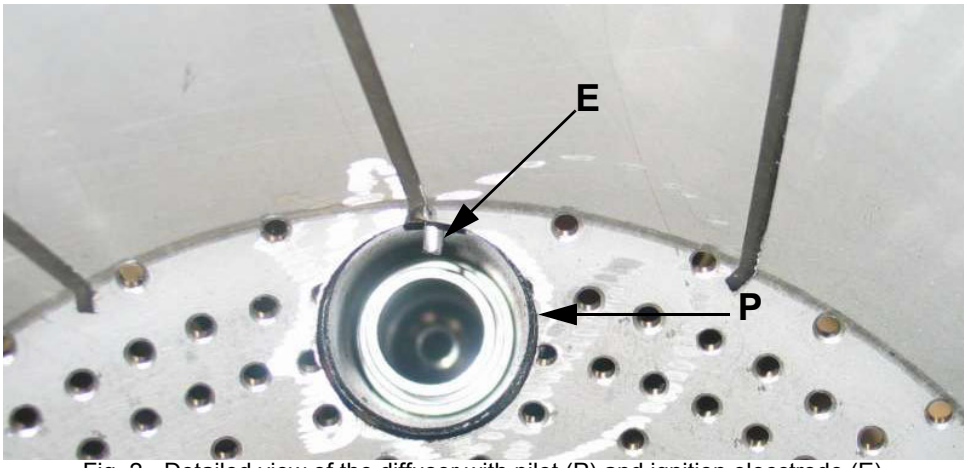

Fig. 2 - Detailed view of the diffuser with pilot (P) and ignition elecctrode (E)

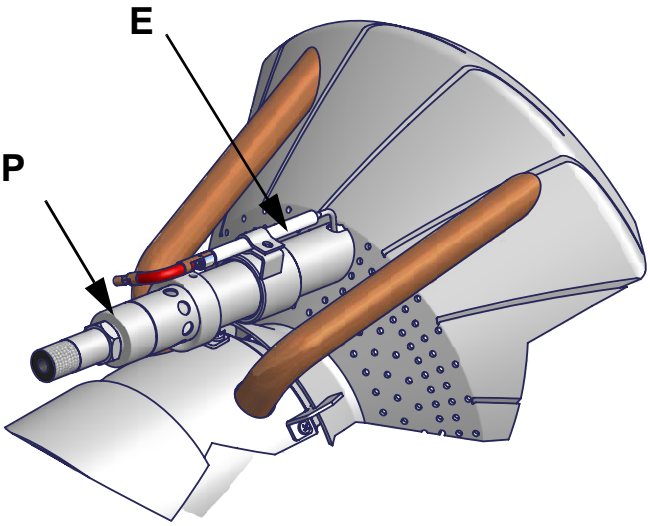

Fig. 3 - Detailed view of the combustion head with pilot (P) and ignition elecctrode (E)

Observe the values shown on next picture.

.

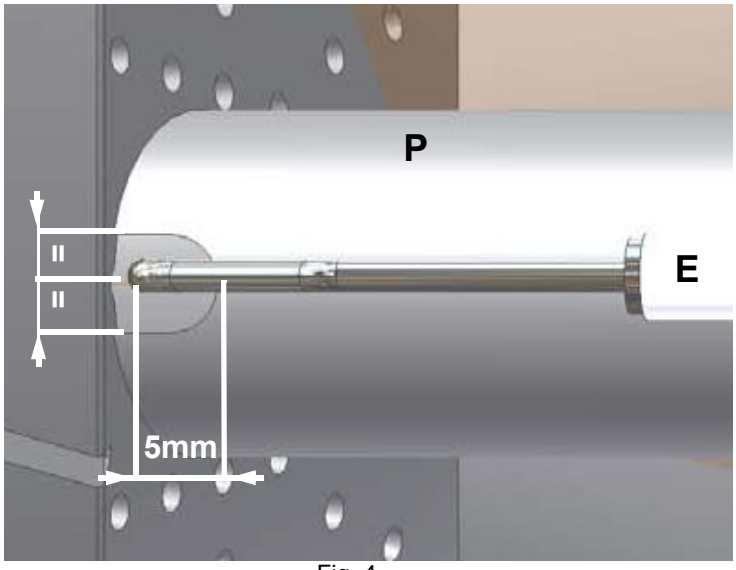

Fig. 4

Replacing the ignition electrode

ATTENTION: avoid the electrode to get in touch with metallic parts (blast tube, head, etc.), otherwise the boiler operation would be compromised. Check the electrode position after any intervention on the combustion head.

To replace the ignition electrode, proceed as follows:

1 remove the burner cover
2 disconnect the electrode (E) cable (CE);
3 remove the combustion head (see par. “Removing the combustion head”);
4 loose screw (B) that fasten the ignition electrode (E) to the burner pilot (P);
5 remove the electrode and replace it, referring to the values quoted on figure.

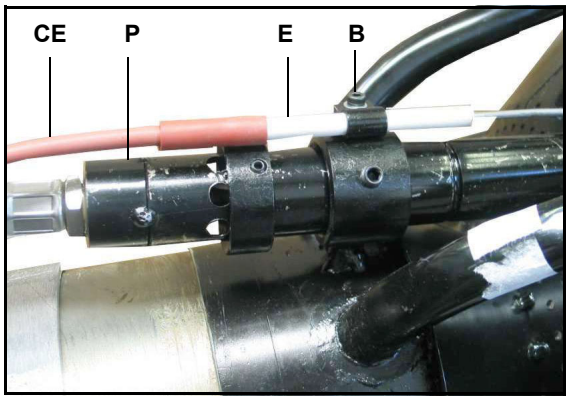

Replacing the detection electrode (natural gas burners)

ATTENTION: avoid the electrode to get in touch with metallic parts (blast tube, head, etc.), otherwise the boiler operation would be compromised. Check the electrode position after any intervention on the combustion head.

To replace the detection electrode, proceed as follows:

1 remove the combustion head according to the procedure on paragraph “Removing the combustion head”;
2 by means of an allen key, loose the fixing screws of the detection electrode **ER** and replace it;

3 replace the combustion head.

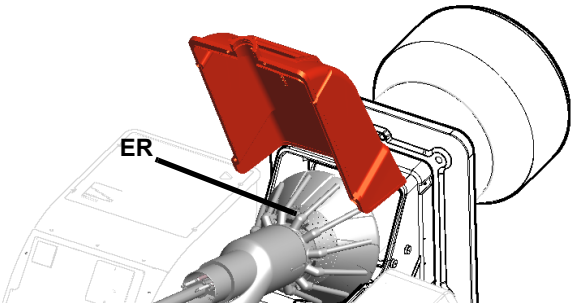

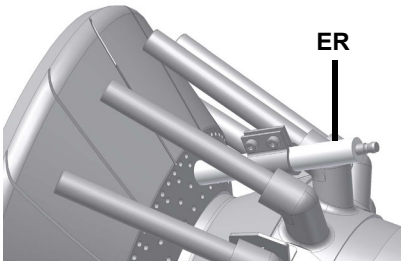

Checking the detection current with electrode (natural gas)

To check the detection signal follow the scheme in the picture below. If the signal is less than the value indicated, check the position of the detection electrode or detector, the electrical contacts and, if necessary, replace the electrode or the detector.

Control box	Minimum detection signal
Siemens LME7..	2µA (with electrode)

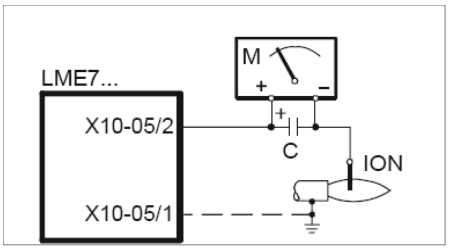

Fig. 5: Detection by electrode

Checking the detection current

To check the detection signal follow the scheme in the picture below. If the signal is less than the value indicated, check the position of the detection electrode or detector, the electrical contacts and, if necessary, replace the electrode or the detector.

Control box	Minimum detection signal
Siemens LME7...	70µA (with UV detector)

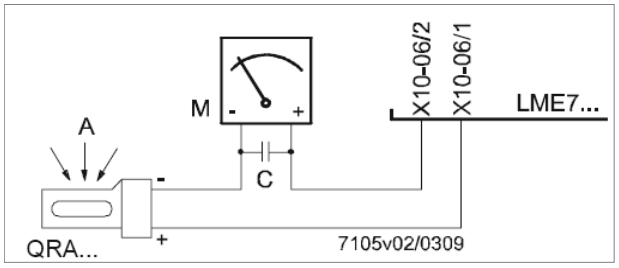

Fig. 6: Detection by photocell QRA..

Flame detection probe

To clean/replace the detection photocell, proceed as follows:

1 Disconnect the system from the electrical power supply.
2 Shut off the fuel supply;
3 remove the photocell from its slot (see next figure);
4 clean the bulbe if dirty, taking care not to touch it with bare hands;
5 if necessary, replace the bulb;
6 replace the photocell into its slot.

Burner service term

- In optimal operating conditions, and with preventive maintenance, the burner can last up to 20 years.
- Upon expiry of the burner service term, it is necessary to carry out a technical diagnosis and, if necessary, an overall repair.
- The burner status is considered to be at its limit if it is technically impossible to continue using it due to non-compliance with safety requirements or a decrease in performance.
- The owner makes the decision whether to finish using the burner, or replacing and disposing of it based on the actual state of the appliance and any repair costs.
- The use of the burner for other purposes after the expiry of the terms of use is strictly prohibited.

Seasonal stop

To stop the burner in the seasonal stop, proceed as follows:

1 turn the burner main switch to 0 (Off position)
2 disconnect the power mains
3 close the fuel valve of the supply line

Burner disposal

In case of disposal, follow the instructions according to the laws in force in your country about the “Disposal of materials”.

WIRING DIAGRAMS

Refer to the attached wiring diagrams.

WARNING

1 - Electrical supply 400V 50Hz 3N a.c.
2 - Do not reverse phase with neutral
3 - Ensure burner is properly earthed

TROUBLESHOOTNG GUIDE - Gas operation

BURNER DOESN'T LIGHT	* No electric power supply	* Wait until power supply is back
	* Main switch open	* Close the switch
	* Thermostats open	* Check set points and thermostat connections
	* Bad thermostat set point or broken thermostat	* Set or replace the thermostat
	* No gas pressure	* Restore gas pressure
	* Safety devices (manually operated safety thermostat or pressure switch and so on) open	* Restore safety devices; wait that boiler reaches its temperature then check safety device functionality.
	* Broken fuses	* Replace fuses. Check current absorption
	* Fan thermal contacts open (only three phases)	* Reset contacts and check current absorption
	* Burner control locked out	* Reset and check its functionality
	* Burner control damaged	* Replace burner control
GAS LEAKAGE: BURNER LOCKS OUT (NO FLAME)	* Gas flow too low	* Increase the gas flow * Check gas filter cleanness * Check butterfly valve opening when burner is starting (only Hi-Low flame and progressive)
	* Ignition electrodes discharge to ground because dirty or broken	* Clean or replace electrodes
	* Bad electrodes setting	* Check electrodes position referring to instruction manual
	* Electrical ignition cables damaged	* Replace cables
	* Bad position of cables in the ignition transformer or into the electrodes	* Improve the installation
	* Ignition transformer damaged	* Replace the transformer
BURNER LOCKS OUT WITH FLAME PRESENCE	* Bad flame detector set	
	* Flame detector damaged	* Replace or adjust flame detector
	* Bad cables of flame detector	* Check cables
	* Burner control damaged	* Replace burner control
	* Phase and neutral inverted	* Adjust connections
	* Ground missing or damaged	* Check ground continuity
	* Voltage on neutral	* Take off tension on neutral
	* Too small flame (due to not much gas)	* Adjust gas flow * Check gas filter cleanness
	* Too much combustion air	* Adjust air flow rate
only FOR LME22: BURNER CONTINUES TO PERFORM ALL ITS FEATURES WITHOUT IGNITING THE BURNER	* Air pressure switch damaged or bad links	* Check air pressure switch functions and links
	* Burner control damaged	* Replace burner control
BURNER LOCKS OUT WITHOUT ANY GAS FLOW	* Gas valves don't open	* Check voltage on valves; if necessary replace valve or the burner control * Check if the gas pressure is so high that the valve cannot open
	* Gas valves completely closed	* Open valves
	* Pressure governor too closed	* Adjust the pressure governor
	* Butterfly valve too closed	* Open the butterfly valve
	* Maximum pressure switch (if installed) open.	* Check connection and functionality
	* Air pressure switch doesn't close the NO contact	* Check connections * Check pressure switch functionality
THE BURNER IS BLOCKED AND THE EQUIPMENT PROVIDES A LOCK CODE "CAUSE AIR PRESSURE SWITCH FAULT"	* Air pressure switch damaged (it keeps the stand-by position or badly set	* Check air pressure switch functionality * Reset air pressure switch
	* Air pressure switch connections wrong	* Check connections
	* Air fan damaged	* Replace motor
	* No power supply	* Reset power supply
	* Air damper too closed	* Adjust air damper position
BURNER LOCKS OUT DURING NORMAL RUNNING	* Flame detector circuit interrupted	* Check wiring * Check photocell
	* Burner control damaged	* Replace burner control
	* Maximum gas pressure switch damaged or badly set	* Reset pressure switch or replace it
THE BURNER STARTS AND AFTER A WHILE IT REPEATS THE STARTING CYCLE.	* Gas pressure switch badly set	* Reset the pressure switch
	* Gas filter dirty	* Clean gas filter
	* Gas governor too low or damaged	* Reset or replace the governor
BURNER STANDS WHILE RUNNING WITHOUT ANY SWITCHING OF THERMOSTATS	* Thermal contacts of fan motor open	* Reset contacts and check values * Check current absorption
FAN MOTOR DOESN'T START	* Internal motor wiring broken	* Replace wiring or complete motor
	* Fan motor starter broken	* Replace starter
	* Fuses broken (three phases only)	* Replace fuses and check current absorption
BURNER DOESN'T SWITCH TO HIGH FLAME	* Hi-low flame thermostat badly set or damaged	* Reset or replace thermostat
	* Servomotor cam badly set	* Reset servomotor cam
***mechanical only*: SOMETIMES THE SERVOMOTOR RUNS IN THE WRONG WAY**	* Servomotor capacitor damaged	* Replace capacitor

C.I.B. UNIGAS S.p.A.
Via L.Galvani, 9 - 35011 Campodarsego (PD) - ITALY
Tel. +39 049 9200944 - Fax +39 049 9200945/9201269
web site: www.cibunigas.it - e-mail: cibunigas@cibunigas.it

Note: specifications and data subject to change. Errors and omissions excepted.

LME73.000Ax + PME73.831AxBC
LME73.831AxBC

Service instruction manual

M12921CB Rel.1.2 02/2016

GENERAL FEATURES

LME/ is suitable for gas, light and heavy oil burners
LME7 series has two devices: LME73.000 (hardware) and PME73.831AxBC (programmable unit). The LME73.831AxBC is also available: it has a built in software and it isa not programmable.
LME7 is inside the control panel. If supplied, PME73.831BC is inside the LME7;
The display AZL23.. or AZL21.. is available for Service and hardware setup.

LME7… are used for the startup and supervision of 2-stage/progressive, modulating forced draft gas burners in intermittent operation.
The flame is supervised with an ionization probe, optionally with UV flame detector QRA2..., QRA4.U or QRA10....
Integrated in the LME7... basic unit are:
• Burner control
• BCI
• Control for one actuator
• Lockout reset button (info button)
• 3 multicolor signal lamp LED for operations and fault notifications
• 3 x 7-segment display for service, fault and operating state information
• Interface for program module (no function)
Passwords protect the different parameter levels against unauthorized access. Basic settings that the plant operator can make on site require no password.
Functions:
- Undervoltage detection
- Electrical remote reset facility
- Accurate control times thanks to digital signal handling
- Multicolor indication of fault status and operating state messages
- Air pressure supervision with function check of air pressure switch during start and operation (gas)
- Repetition limitation
- Controlled intermittent operation after 24 hours of continuous operation*
- BCI
- Indication of program sequence

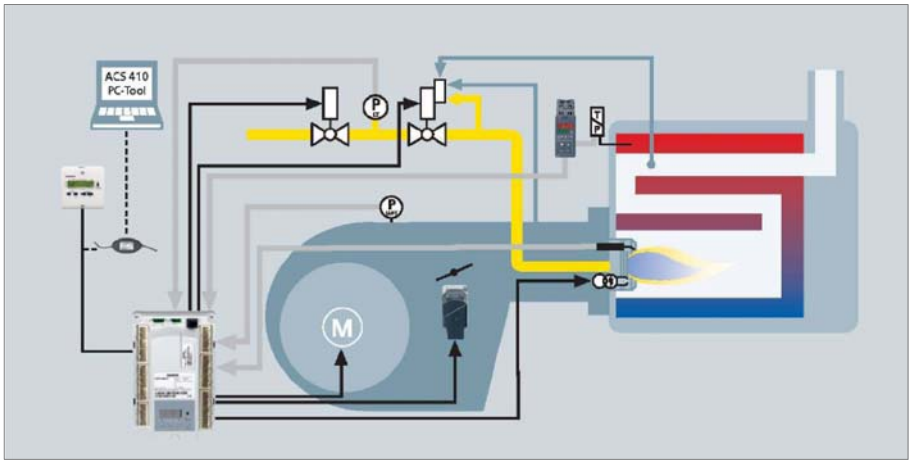

* after no more than 24 hours of continuous operation, the burner control initiates automatic controlled shutdown followed by a restart.

User interface :

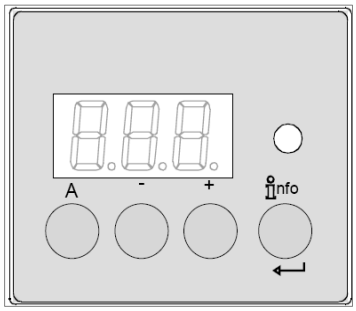

A	***Button A*** - Display preset output - In lockout position: Power value to the time of fault
Info	I***nfo and Enter button*** - Reset in the event of fault, changeover visual diagnostic of the cause of fault (refer to chapter Diagnostics of cause of fault)
-	***- button*** - Display flame signal current 2 or phases display - In lockout position: MMI phase to the time of fault
+	***+ button*** - Display flame signal current 1 or phases display - In lockout position: MMI phase to the time of fault
	3 multicolor signal lamp - Refer to chapter “Blink code table”
- + +	**+ and - button: Escape function** (press + and - simultaneously) - No adoption of value - One menu level up - Keep depressed for >1second for backup / restore function

First startup when PME is supplied or PME replacement:

First startup:
1) insert a new PME
2) turn the power on; The diplay shows "rst" and "PrC" one after the other.
3) keep pushing the INFO button more than 3 seconds; "run" appears; PME parameters will be transferred to LME
4) at the end, "End" and "rst" appears one after the other; Later (2'), the control box locks out "Loc 138"
5) reset the control box by pressing the INFO button (for less than 3 seconds)
Now the display shows "OFF"; the burner is ready to be started.

Replacement:
1) Turn off the burner, replace the existing PME with a new one
2) For the first startup, repeat the above procedure, from step 2.

List of phase display on board LME :

Phase number of 7-segment display	**LED**	**Function**
Standby		
OFF	Off	Standby, waiting for heat demand
P08	Off	Mains ON / test phase (e.g. detector test)
Startup		
P21	Yellow	Safety valve ON, air pressure switch test / POC test (timeout / locking
P22	Yellow	Fan motor ON / air pressure switch test / settling time
P24	Yellow	Actuator opens in prepurging position
P30	Yellow	Prepurging
P36	Yellow	Actuator closes in ignition load / low-fire position
P38	Yellow blinking	Preignition time
P40	Yellow blinking	1st safety time (TSA1) / ignition transformer ON
P42	Green	Safety time (ignition transformer OFF), flame check
P44	Green	Interval: End of safety time and fuel valve 1 (V1) ON Interval: End of safety time and load controller (LR) release
P50 Green	P50 Green	2nd safety time (TSA2)
P54 Green	P54 Green	P259.01: Actuator opens in > low-fire
P54 Green	P54 Green	P260: Actuator closes in low-fire
oP1 Green	oP1 Green	Interval until release of load controller target (analog or 3-position step input)
Operation		
oP	Green	Operation, modulating operation
Shutdown		
P10	Yellow	Shutdown, actuator opens in CLOSE position (home run)
P72	Yellow	Actuator opens in high-fire position / end of operation
P74	Yellow	Postpurging
Valve proving		
P80	Yellow	Test space evacuating
P81	Yellow	Checking time fuel valve 1
P82	Yellow	Test space filling
P83	Yellow	Checking time fuel valve 2
Waiting phases (start prevention)		
P01	Red / yellow blinking	Undervoltage
P02	Yellow	Safety loop open
P04	Red / green blinking	Extraneous light on burner startup (timeout / locking after 30 s)
P90	Yellow	Pressure switch-min open
Lockout		
LOC	Red	Lockout phase

Operation :

	The lockout reset button (info button) (EK) is the key operating element for resetting the burner control and for activating / deactivating the diagnostics functions.
	The multicolor signal lamp (LED) is the key indicating element for visual diagnostics.

Both lockout reset button (EK) and signal lamp (LED) are located in the control panel.
There are 2 diagnostics choices:
1. Visual diagnostics: Indication of operating state or diagnostics of cause of fault
2. Diagnostics: Via internal display or to AZL2.. display and operating unit
Visual diagnostics:
In normal operation, the different operating states are indicated in the form of color codes according to the color code table given below.

Color code table for multicolor signal lamp (LED) **:**

State	Color code	Color
Waiting time (tw), other waiting states	❍.....	OFF
Ignition phase, ignition controlled	● ❍ ● ❍ ● ❍ ● ❍ ● ❍ ●	Blinking yellow
Operation, flame o.k.	□.....	Green
Operation, flame not o.k.	□ ❍ □ ❍ □ ❍ □ ❍ □ ❍	Blinking green
Extraneous light on burner startup	□ ▲ □ ▲ □ ▲ □ ▲ □ ▲	Green-red
Undervoltage	● ▲ ● ▲ ● ▲ ● ▲ ● ▲	Yellow-red
Fault, alarm	▲.....	Red
Error code output (refer to «Error code table»)	▲❍ ▲❍ ▲❍ ▲❍	Blinking red
Interface diagnostics	▲ ▲ ▲ ▲ ▲ ▲ ▲ ▲	Red flicker light
Heating request	●.....	Yellow
Heating request	● ● ▲ ● ● ▲ ● ● ▲ ● ●	Yellow

Key

.....	Steady on
❍	Led off
▲	Led red
●	Led yellow
□	Led green

Program sequence :

Version 1:

- Ignition load < low-fire
- Prepurging in high-fire
- Parameter 515 = 1 (condition parameter 259.01 > 0 seconds)

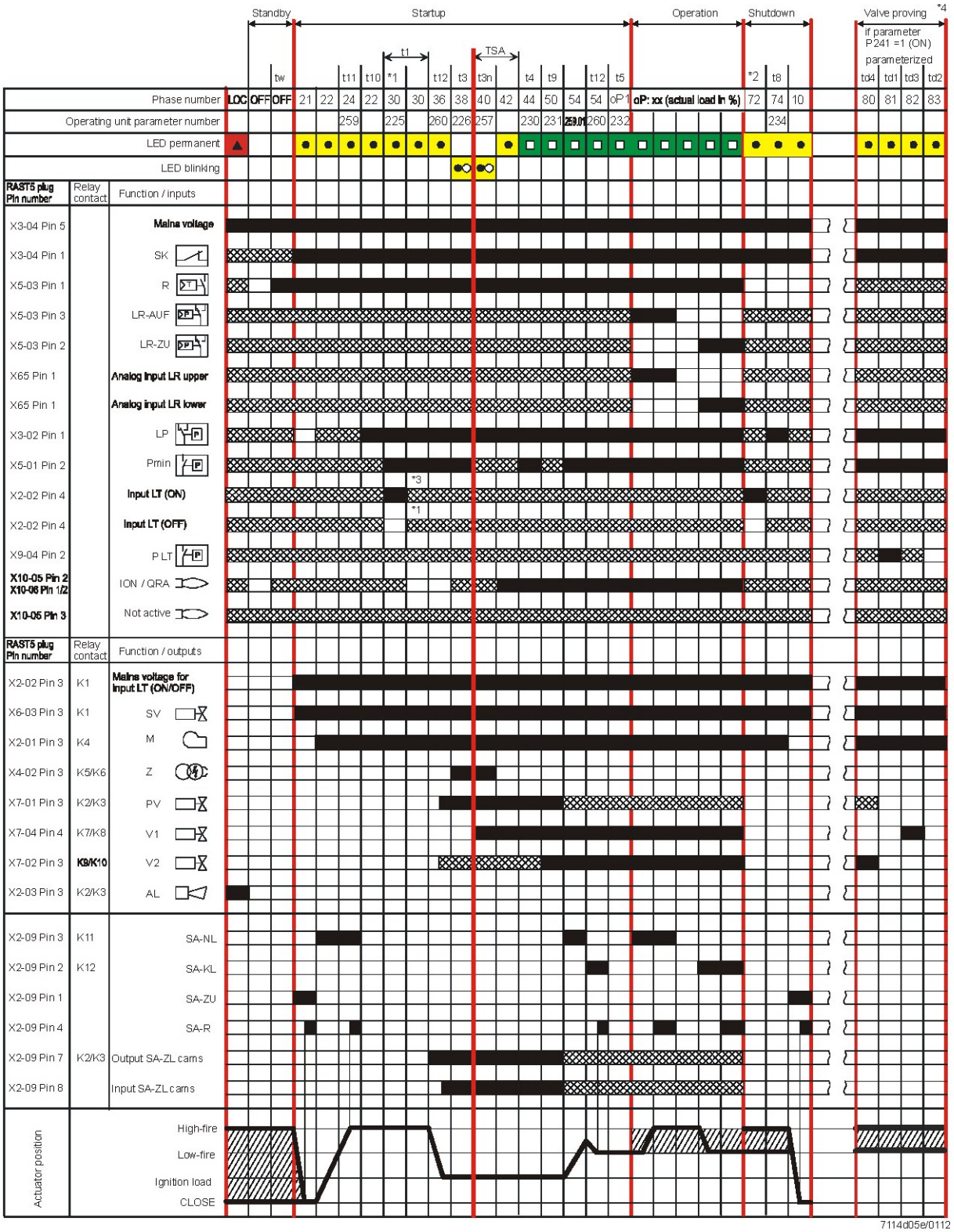

Program sequence :

Version 2:

- Ignition load > low-fire
- Prepurging in high-fire
- Parameter 515 = 1 (condition parameter 259.01 = 0 seconds)

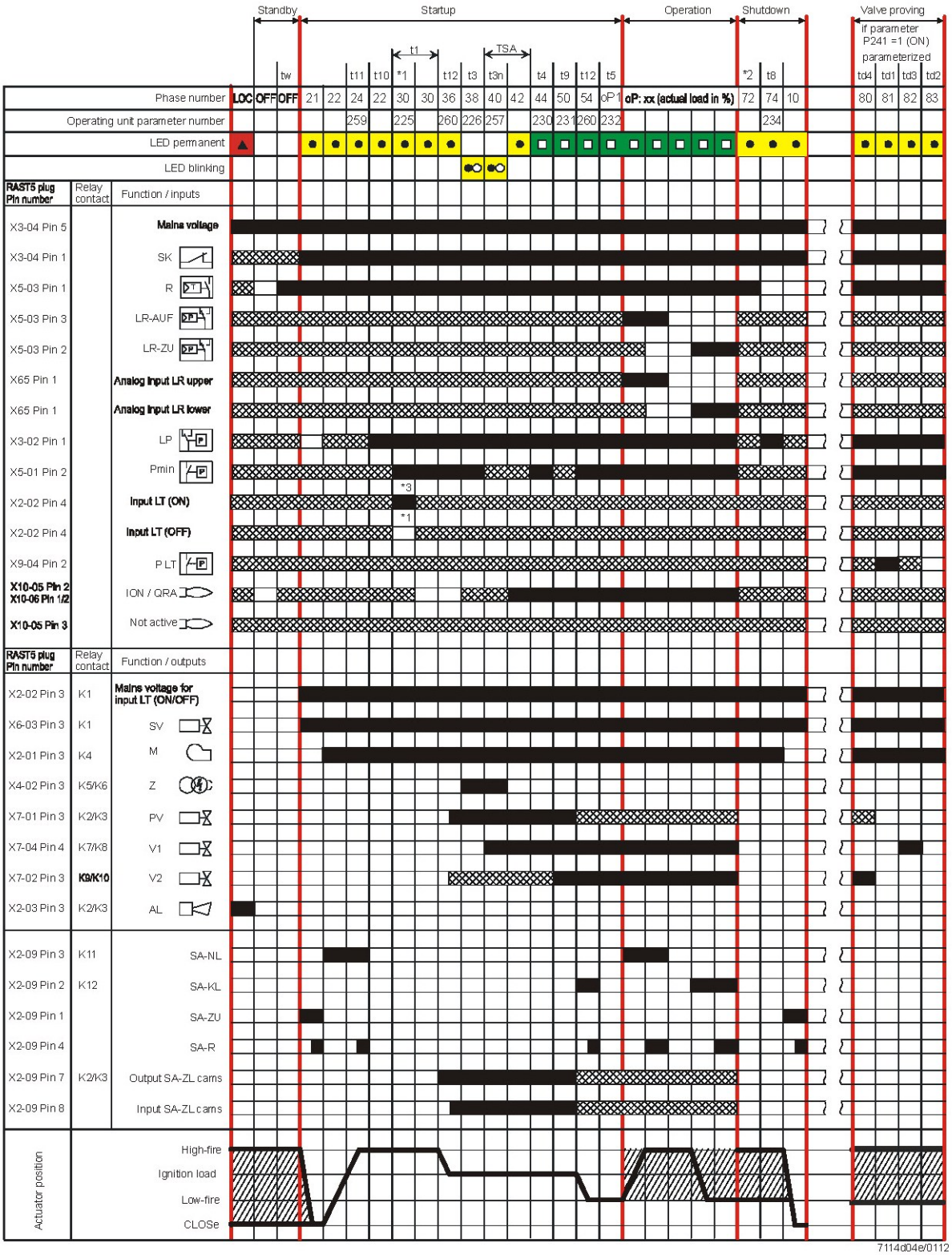

Phase number	Function
LOC	Lockout phase
OFF	Standby, waiting for heat demand
oP	Operation, modulating operation
oP1	Interval until release of load controller target (analog or 3-position step input)
01	Under voltage
02	Safety loop open
04	Extraneous light on burner startup (timeout/locking after 30 seconds)
08	Mains ON/test phase (e.g. detector test)
10	Shutdown, actuator opens in CLOSE position (homerun)
21	Safety valve ON, air pressure switch OFF, actuator opens in CLOSE position
22	Part 1: Fan motor ON
	Part 2: Specified time (t10) air pressure switch (LP)
	Message (timeout) stabilization air pressure switch
24	Actuator opens in prepurge position
30	Part 1: Prepurge time (t1) without extraneous light test
	Valve proving after mains ON, lockout
	Part 2: Prepurge time (t1) with extraneous light test
36	Actuator closes in ignition load
38	Preignition (t3)
40	Postignition time (t3n), parameter 257 + 0.3 seconds
42	Flame detection
44	Interval (t4): End of safety time (TSA) and burner valve 2 ON
50	2nd safety time (t9)
54	Parameter 259.01: Actuator opens in > low-fire
	Parameter 260: Actuator closes in low-fire
72	End of operation, checking if valve proving (LT) shall be performed
74	Postpurging (t8)
80	Test space evacuation (td4)
81	Test time (td1) fuel valve 1 (V1)
82	Test space filling (td3)
83	Test time (td2) fuel valve 2 (V2)
90	Pressure switch-min open □ safety shutdown
*1	Valve proving is conducted when…
	- parameter 241.00 = 1 and parameter 241.02 = 1, or
	- parameter 241.00 = 1 and parameter 241.01 = 0
*2	Valve proving is conducted when…
	- parameter 241.00 = 1 and parameter 241.02 = 1, or
	- parameter 241.00 = 1 and parameter 241.01 = 1
*3	Valve proving (LT) will not be performed

Error code table :

Red blink code of fault signal lamp (LED)	Possible cause
2 x blinks	No establishment of flame at the end of the safety time (TSA)
	- Faulty or soiled flame detector - Faulty or soiled fuel valves - Poor adjustment of burner, no fuel - Faulty ignition equipment
3 x blinks	Air pressure switch (LP) faulty - Loss of air pressure after specified time (t10) - - Air pressure switch (LP) welded in no-load position
4 x blinks	Extraneous light on burner startup
5 x blinks	Time supervision air pressure switch (LP) - Air pressure switch (LP) welded in working position
6 x blinks	Actuator position not reached - Actuator faulty - Wrong adjustment of cam - Actuator defective or blocked - False connection - Misadjustment
7 x blinks	Too many losses of flame during operation (limitation of repetitions) - Faulty or soiled flame detector - Faulty or soiled fuel valves - Poor adjustment of burner
8 x blinks	Free
9 x blinks	Free
10 x blinks	Wiring error or internal error, output contacts, other faults
12 x blinks	Valve proving (LT) - Fuel valve 1 (V1) leaking
13 x blinks	Valve proving (LT) - Fuel valve 2 (V2) leaking
14 x blinks	Error in connection with valve closure control POC
15 x blinks	Error code ≥15 Error code 22: Error of safety loop (SL)

During the time the cause of fault is diagnosed, the control outputs are deactivated:
- Burner remains shut down
- External fault indication (AL) at terminal X2-03, pin 3 steady on

Diagnostics of cause of fault is quit and the burner switched on again by resetting the burner control. Press the lockout reset button (info button) for about 1 second (<3 seconds).

Flame detection – detection electrode :

Short-circuit current	Max. AC 1 mA
Required detector current	Min. DC 2 µA, display approx. 45 %
Possible detector current	Max. DC 3 µA, display approx. 100 %
Permissible length of detector cable (laid separately)	30 m (core-earth 100 pF/m)

Measuring circuit

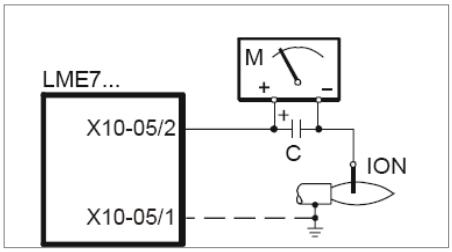

Keys

C - Electrolytic condenser 100...470 µF; DC 10...25 V
ION - Ionization probe
M - Microammeter Ri max. 5,000 Ω

Flame detection – UV probe :

Threshold values when flame is supervised by QRA...

- Start prevention (extraneous light)	Intensity (parameter 954) approx. 12 %
- Operation	Intensity (Parameter 954) approx. 13 %
Operating voltage	AC 280 V ±15 %
Mains frequency	50...60 Hz ±6 %
Required detector current	Min. 70 µA
Possible detector current	
- Operation	Max. 700 µA
Perm. length of detector cable	
- Normal cable, laid separately [1])	Max. 100 m

[1]) Multicore cable not permitted

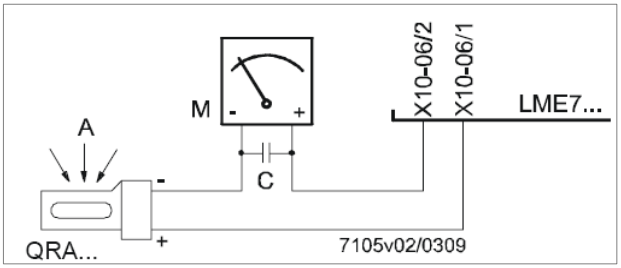

Keys

A - Exposure to light
C - Electrolytic condenser 100...470 µF; DC 10...25 V
M - Microammeter Ri max. 5,000 Ω

Warning!
Input QRA... is not short-circuit-proof!
Short-circuits of X10-06/2 against earth can destroy the QRA... input
Simultaneous operation of flame detector QRA... and detection electrode is not permitted
To make certain the age of the UV tube can be determined, the LME7... basic unit must always be connected to mains supply.

Gas proving system :

Valve proving is dependent on input valve proving ON / OFF (X2-02). When a leak is detected, the gas valve proving function ensures that the gas valves will not be opened and that ignition will not be switched on. Lockout will be initiated.
.

Valve proving with separate pressure switch (P LT)
Step 1: td4 – Evacuation of test space
Gas valve on the burner side is opened to bring the test space to atmospheric pressure.
Step 2: td1 – Test atmospheric pressure
When the gas has closed, the gas pressure in the test space must not exceed a certain level.
Step 3: td3 Filling of test space
Gas valve on the mains side opens to fill the test space.
Step 4: td2 – Test gas pressure
When the gas valve has closed, the gas pressure in the test space must not drop below a certain level.

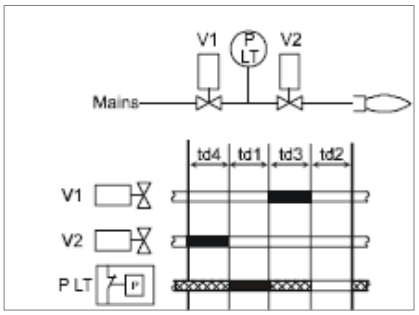

Controllo tenuta con pressostati separati

Keys
td1 Test atmospheric pressure
td2 Test gas pressure
td3 Filling of test space
td4 Evacuation of test space
V… Fuel valve
PLT Pressure switch valve proving
Input / output signal 1 (ON)
Input / output signal 0 (OFF)
Input permissible signal 1 (ON) or 0 (OFF)

No.	***Parameter***
242	Valve proving evacuation of test space
243	Valve proving time test atmospheric pressure
244	Valve proving filling of test space
245	Valve proving time test gas pressure

Instruction, control and modify via AZL2x :

The AZL2x.. display/programming unit is shown below:

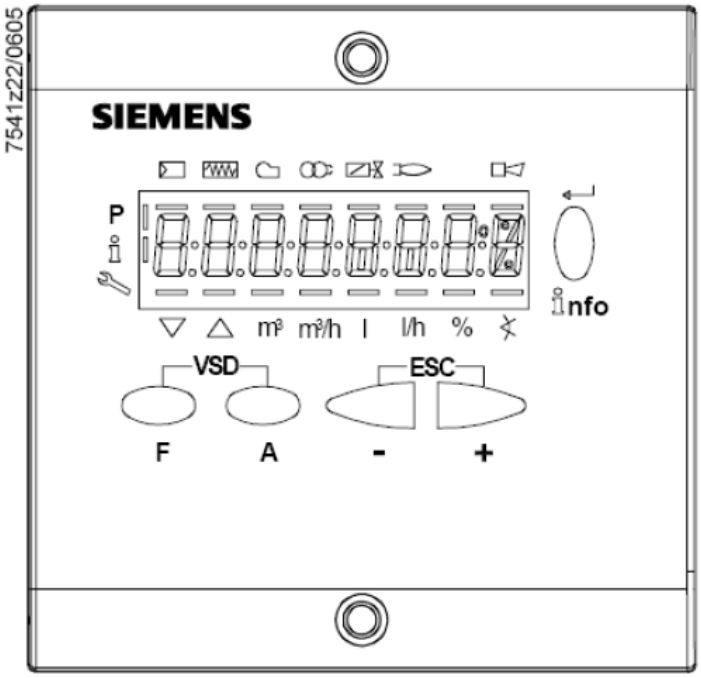

The keys functions are the following:

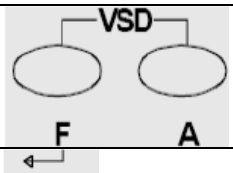	Key F + A While pressing the two keys contemporarly, the code message will appear: by entering the proper password it is possible to access the Service mode.
	Info and Enter keys Used for Info and Service menues Used as Enter key in the setting modes Used as Reset key in the burner operation mode Used to enter a lower level menu
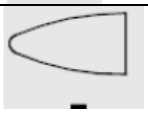	Key - Used for one menu level down Used to decrease a value
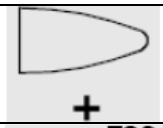	Key + Used for one menu level up Used to increase a a value
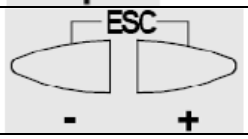	Keys (+ & -)= ESC By pressing + and - at the same time, the ESCAPE function is performed No adoption of value One menu level down

The display will show these data:

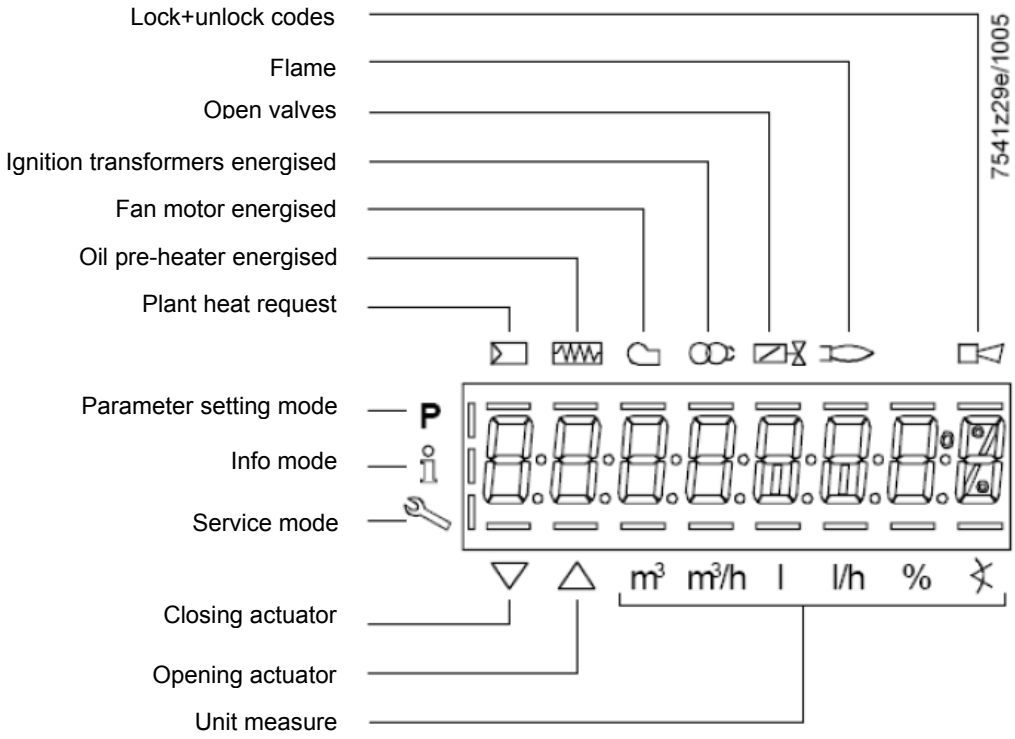

While pushing the button together with whatever else button, LME73 locks out; the display shows

On stand-by position,

appears

On operation, all the phases appears with their number. 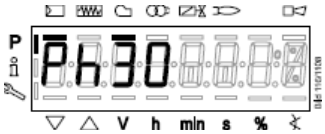

List of phase with display AZL2x :

Phase number	Function
Standby	
OFF	Standby, waiting for heat request
Ph08	Power ON / test phase (e.g. detector test)
Startup	
Ph21	Safety valve ON, air pressure switch test / POC test (timeout / locking after 5 seconds), actuator opens in low-fire position / CLOSE position
Ph22	Fan motor ON or air pressure switch test / settling time
Ph24	Actuator travels to the prepurge position
Ph30	Prepurging
Ph36	Actuator closes until ignition load / low-fire is reached, and parameter 259.02: Actuator opens to a position > ignition load
Ph38	Preignition
Ph40	1st safety time (TSA1) / ignition transformer ON
Ph42	Safety time (ignition transformer OFF), flame check
Ph44	Interval: End of safety time and fuel valve 1 (V1) ON
Ph50	2nd safety time (TSA2)
Ph54	P259.01: Actuator opens in > low-fire
Ph54	P260: Actuator closes in low-fire
oP1	Interval until release of load controller target (analog or 3-position step input)
Operation	
oP	Operation, modulating operation
Shutdown	
Ph10	Shutdown, actuator opens in CLOSE position (home run)
Ph72	Actuator opens in high-fire position / end of operation
Ph74	Postpurging
Valve proving	
Ph80	Test space evacuating
Ph81	Checking time fuel valve 1
Ph82	Test space filling
Ph83	Checking time fuel valve 2
Waiting phases (start prevention)	
Ph01	Undervoltage
Ph02	Safety loop open
Ph04	Extraneous light at burner startup (timeout / locking after 30 seconds)
Ph90	Pressure switch-min open → safety shutdown
Lockout	
LOC	Lockout phase

Error code list with operation via internal AZL :

Error code	***Clear text***	***Possible cause***
Loc 2	No establishment of flame at the end of the safety time (TSA)	- Faulty or soiled fuel valves - Faulty or soiled flame detector - Poor adjustment of burner, no fuel - Faulty ignition equipment
Loc 3	Air pressure faulty (air pressure switch (LP) welded in no-load position, decrease to spe-cified time (t10) (air pressure switch (LP) re-sponse time)	Air pressure switch (LP) faulty - Loss of air pressure signal after specified time (t10) - Air pressure switch (LP) is welded in no-load position
Loc 4	Extraneous light	Extraneous light when burner startup
Loc 5	Air pressure faulty, air pressure switch wel-ded in working position	Time out air pressure switch (LP) - Air pressure switch (LP) is welded in working position
Loc 6	Fault of actuator	- Actuator faulty or blocked - Faulty connection - Wrong adjustment
Loc 7	Loss of flame	Too many losses of flame during operation (limitation of repetitions) - Faulty or soiled fuel valves - Faulty or soiled flame detector - Poor adjustment of burner
Loc 8	---	Free
Loc 9	---	Free
Loc 10	Error not relatable (application), internal error	Wiring error or internal error, output contacts, other faults
Loc 12	Valve proving	Fuel valve 1 (V1) leak
Loc 13	Valve proving	Fuel valve 2 (V2) leak
Loc 22	Safety loop open	- Gas pressure switch-max open - Safety limit thermostat cut out
Loc 138	Restore process successful	Restore process successful
Loc 167	Manual locking	Manual locking
Loc: 206	AZL2... incompatible	Use the latest version

Entering the Parameter levels:

y means of a proper use of the keys, it is possible to enter the various level parameters, as shown in the following flow chart :

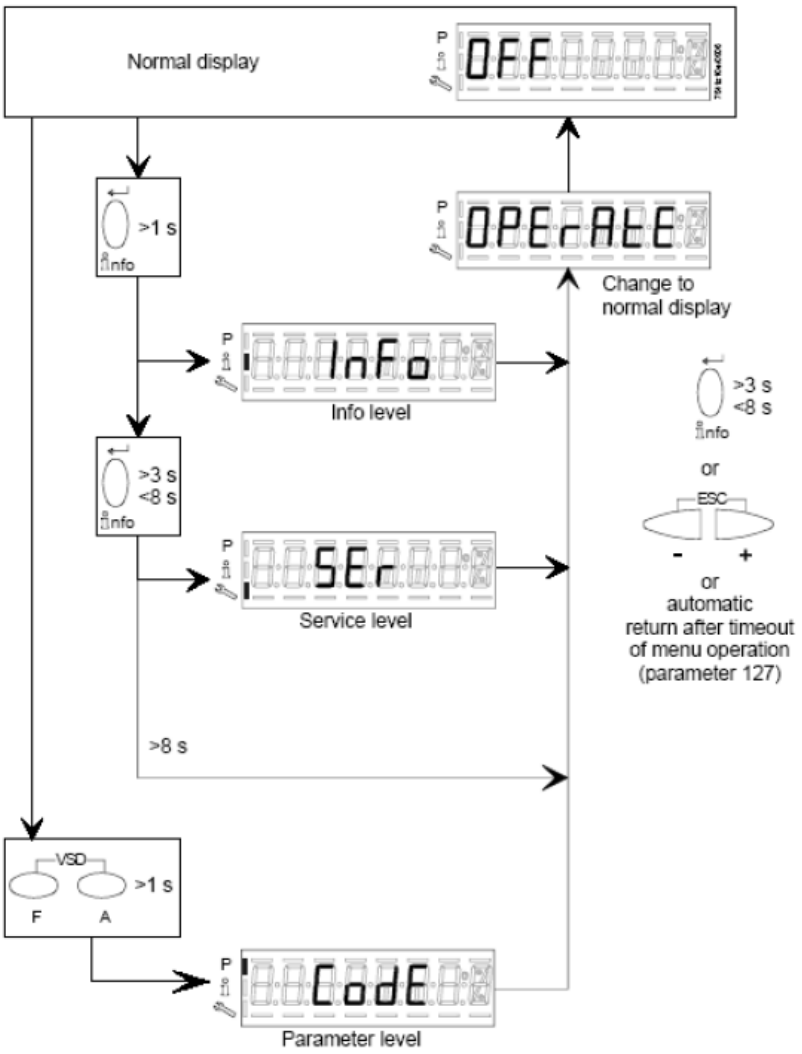

Info level :

Keep pushing the

button until 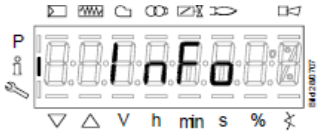

appears. Use + or - for scrolling the parameter list. If on the right side a dash-dot appears, it means the display doesn't show the full description. *Push*

again for 1 to 3 s in order to show the full description.

Below the visible **Info** parameters:

Parameter number	Parameter list PME73.000Ax + PME73.831AxBC LME73.831AxBC	Edit	Value range Min.	Value range Max.	Resolution	Factory setting	Password level reading from level	Password level writing from level
100	**General**							
102	Identification date	Read only	---	---	---		Info	---
103	Identification number	Read only	0	9999	1		Info	---
113	Burner identification	Read only	x	xxxxxxxx	1		Info	---
164	Numbers of startups resettable	Resettable	0	999999	1		Info	Info
166	Total number of startups	Read only	0	999999	1		Info	---
170.00	Switching cycles actuator relay K12	Read only	0	999999	1		Info	---
170.01	Switching cycles actuator relay K11	Read only	0	999999	1		Info	---
170.02	Switching cycles actuator relay K2	Read only	0	999999	1		Info	---
170.03	Switching cycles actuator relay K1	Read only	0	999999	1		Info	---
171	Max. switching cycles actuator relay	Read only	0	999999	1		Info	---

Service level :

Keep pushing the

button until 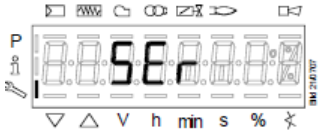

appears. Use + or - for scrolling the parameter list. . If on the right side a dash-dot appears, it means the display doesn't show the full description. *Push*

again for 1 to 3 s in order to show the full description.

Below the visible **Info** parameters:

Parameter number	Parameter list PME73.000Ax + PME73.831AxBC LME73.831AxBC	Edit	Value range Min.	Value range Max.	Resolution	Factory setting	Password level reading from level	Password level writing from level
700	**Error history**							
701	Current error:	Read only					Service	---
	00: Error code		2	255	1			
	01: Startup meter reading		0	999999	1			
	02: MMI phase		---	---	---			
	03: Power value		0%	100%	1			
702	Error history former 1:	Read only					Service	---
	00: Error code		2	255	1			
	01: Startup meter reading		0	999999	1			
	02: MMI phase		---	---	---			
	03: Power value		0%	100%	1			
•								
•								
•								
711	Error history former 10:	Read only					Service	---
	00: Error code		2	255	1			
	01: Startup meter reading		0	999999	1			
	02: MMI phase		---	---	---			
	03: Power value		0%	100%	1			

900	**Process data**							
936	Normalized speed	Read only	0%	100%	0.01 %		Service	---
951	Mains voltage	Read only	0 V	LME73.000A1: 175 V LME73.000A2: 350 V	1 V		Service	---
954	Flame intensity	Read only	0%	100%	1%		Service	---

Parameter level (Heating engeneering) :

This level lets the engineer to modify some burner parameters. It is protect with a 4 digit password (SO level) and a 5 digit password (OEM level)
Password input : push **F** and **A** buttons together until the display shows "**code"** and 7 underlines. The left one flashes. By **+** or **-** move the flashing underline until it is on the desired position and push "enter". The underline becomes a dash. By means of **+** or **-,** choose the right character and push "enter". Input the whole password and the **PArA** appears and later on **000 Int** .
Scroll the parameters using **+** or **-: 000Int**, **100**, **200**, **500**, **600 are on the display**. Choose the proper parameter group with the **enter** button and scroll the options with **+** e poi **-** (below the full par set: the two columns on the right give the level access). Choose the parameter to be modified with "enter" is writing is allowed. The parameter now flashes: **+** or **–** modifies the parameter and **enter** confirms. **+** and **-** pushed togther movbe the menu one step back. Push **+** and **-** several times in order to get the home position..

Parameter number	Parameter list PME73.000Ax + PME73.831AxBC LME73.831AxBC	Edit	Value range		Resolution	Factory setting	Password level reading from level	Password level writing from level
			Min.	Max.				
0	**Internal parameter**							
41	Heating engineers password (4 characters)	Edit	xxxx	xxxx	---		---	OEM
42	OEM's password (5 characters)	Edit	xxxxx	xxxxx	---		---	OEM
60	Backup / restore	Edit	Restore	Backup	---		---	SO
100	**General**							
123	Min. power control step	Edit	1%	10%	0.1		SO	SO
140	Mode display of Display and operating unit AZL2... 1 = Standard (program phase) 2 = Flame 1 (QRA... / ION) 3 = Flame 2 (QRB... / QRC...) 4 = Active power (power value)	Edit	1	4	4		SO	SO
200	**Burner control**							
224	Specified time (t10) air pressure switch (LP)	Edit	0 s	13.818 s	0.294 s	12,054	SO	OEM
225	Gas: Prepurge time (t1)	Edit	0 s	1237 s	4.851 s	29,106	SO	OEM
226	Gas: Preignition time (t3)	Edit	1.029 s	37.485 s	0.147 s	2,058	SO	OEM
230	Interval (t4): End of safety time (TSA) - fuel valve 1 (V1) ON	Edit	3.234 s	74.97 s	0.294 s	3,234	SO	OEM
231	Interval (t9): Fuel valve 1 (V1) ON - pilot valve (PV) OFF	Edit	0 s	74.97 s	0.294 s	2,940	SO	OEM
232	Interval (t5): Pilot valve (PV) OFF - load controller (LR) release	Edit	2.058 s	74.97 s	0.294 s	8.820	SO	OEM
234	Gas: Postpurge time (t8)	Edit	0 s	1237 s	4.851 s	0	SO	OEM
239	Gas: Intermittent operation after 24 hours of continuous operation 0=OFF 1=ON	Edit	0	1	1	1	SO	OEM

240	Repetition in the event of loss of flame during operation 0 = None 1 = None 2 = 1 x Repetition	Edit	0	2	1	0	SO	OEM
241.00	Valve proving 0 = Off 1 = On	Edit	0	1	1	1	SO	OEM
241.01	Valve proving 0 = During prepurge time (t1) 1 = During postpurge time (t8)	Edit	0	1	1	0	SO	OEM
241.02	Valve proving 0 = According to P241.01 1 = During prepurge time (t1) and postpurge time (t8)	Edit	0	1	1	0	SO	OEM
242	Valve proving test space evacuating	Edit	0 s	2.648 s	0.147 s	2,646	SO	OEM
243	Valve proving time test atmospheric pressure	Edit	1.029 s	37.485 s	0.147 s	10,290	SO	OEM
244	Valve proving test space filling	Edit	0 s	2.648 s	0.147 s	2,646	SO	OEM
245	Valve proving time test gas pressure	Edit	1.029 s	37.485 s	0.147 s	10,290	SO	OEM
254	Response time detector error 0 = 1 s 1 = 3 s	Edit	0	1	1	0	SO	OEM
257	Gas: Postignition time (t3n – 0.3 seconds)	Edit	0 s	13.23 s	0.147 s	2,205	SO	OEM
259.00	Opening time of actuator (t11) (timeout for lockout)	Edit	0 s	1237 s	4.851 s	67,914	SO	OEM
259.01	Opening time of actuator from ignition load to low-fire position	Edit	0 s	37.485 s	0.147 s	14,994	SO	OEM
259.02	Opening time of actuator from low-fire to ignition load position	Edit	0 s	37.485 s	0.147 s	14,994		
260	Closing time of actuator (t12) (timeout for lockout)	Edit	0 s	1237 s	4.851 s	67,914	SO	OEM
500	**Ratio control**							
515	Actuator position during prepurge time (t1) and postpurge time (t8) 0: Purging in low-fire 1: Purging in high-fire	Edit	0	1	1	1	SO	OEM
560	Pneumatic combustion control 0 = off / 3-step modulation 1 = PWM fan / analog modulation ~~2 = air damper / analog modulation (feedback potentiometer ASZxx.3x required)~~	Edit	0	2	1	1	SO	SO

600	Power setting							
654	Analog input (feedback potentiometer ASZxx.3x required) 0 = 3-position step input 1 = 0...10 V 2 = 0...135 Ω 3 = 0...20 mA 4 = 4...20 mA with lockout at I <4 mA 5 = 4...20 mA	Edit	0	5	1	0	SO	SO

WARNING	
Parameter Num. : **41** **42** **60** **123** **140** **242** **243** **244** **245** **259.01**	**Adjustable parameters from SO or OEM levels for LME73.831AxBC**

Note: Specifications and data subject to change. Errors and omissions excepted.