TP90A-TP91A
TP92A-TP93A
TP512A-TP515A
TP520A-TP525A

Gas burners

MANUAL OF INSTALLATION - USE - MAINTENANCE

CIB UNIGAS

BURNERS - BRUCIATORI - BRULERS - BRENNER - QUEMADORES - ГОРЕЛКИ

M039177CD Rel. 3.5 08/2023

DANGERS, WARNINGS AND NOTES OF CAUTION

THIS MANUAL IS SUPPLIED AS AN INTEGRAL AND ESSENTIAL PART OF THE PRODUCT AND MUST BE DELIVERED TO THE USER.

INFORMATION INCLUDED IN THIS SECTION ARE DEDICATED BOTH TO THE USER AND TO PERSONNEL FOLLOWING PRODUCT INSTALLATION AND MAINTENANCE.

THE USER WILL FIND FURTHER INFORMATION ABOUT OPERATING AND USE RESTRICTIONS, IN THE SECOND SECTION OF THIS MANUAL. WE HIGHLY RECOMMEND TO READ IT.

CAREFULLY KEEP THIS MANUAL FOR FUTURE REFERENCE.

1) GENERAL INTRODUCTION

- The equipment must be installed in compliance with the regulations in force, following the manufacturer's instructions, by qualified personnel.
- Qualified personnel means those having technical knowledge in the field of components for civil or industrial heating systems, sanitary hot water generation and particularly service centres authorised by the manufacturer.
- Improper installation may cause injury to people and animals, or damage to property, for which the manufacturer cannot be held liable.
- Remove all packaging material and inspect the equipment for integrity.

In case of any doubt, do not use the unit - contact the supplier.

The packaging materials (wooden crate, nails, fastening devices, plastic bags, foamed polystyrene, etc), should not be left within the reach of children, as they may prove harmful.

- Before any cleaning or servicing operation, disconnect the unit from the mains by turning the master switch OFF, and/or through the cut-out devices that are provided.
- Make sure that inlet or exhaust grilles are unobstructed.
- In case of breakdown and/or defective unit operation, disconnect the unit. Make no attempt to repair the unit or take any direct action.

Contact qualified personnel only.

Units shall be repaired exclusively by a servicing centre, duly authorised by the manufacturer, with original spare parts and accessories.

Failure to comply with the above instructions is likely to impair the unit's safety.

To ensure equipment efficiency and proper operation, it is essential that maintenance operations are performed by qualified personnel at regular intervals, following the manufacturer's instructions.

- When a decision is made to discontinue the use of the equipment, those parts likely to constitute sources of danger shall be made harmless.
- In case the equipment is to be sold or transferred to another user, or in case the original user should move and leave the unit behind, make sure that these instructions accompany the equipment at all times so that they can be consulted by the new owner and/or the installer.
- This unit shall be employed exclusively for the use for which it is meant. Any other use shall be considered as improper and, therefore, dangerous.

The manufacturer shall not be held liable, by agreement or otherwise, for damages resulting from improper installation, use and failure to comply with the instructions supplied by the manufacturer.The occurrence of any of the following circustances may cause explosions, polluting unburnt gases (example: carbon monoxide CO), burns, serious harm to people, animals and things:

- Failure to comply with one of the WARNINGS in this chapter
- Incorrect handling, installation, adjustment or maintenance of the burner
- Incorrect use of the burner or incorrect use of its parts or optional supply

2) SPECIAL INSTRUCTIONS FOR BURNERS

- The burner should be installed in a suitable room, with ventilation openings complying with the requirements of the regulations in force, and sufficient for good combustion.
- Only burners designed according to the regulations in force should be used.
- This burner should be employed exclusively for the use for which it was designed.
- Before connecting the burner, make sure that the unit rating is the same as delivery mains (electricity, gas oil, or other fuel).
- Observe caution with hot burner components. These are, usually, near to the flame and the fuel pre-heating system, they become hot during the unit operation and will remain hot for some time after the burner has stopped.

When the decision is made to discontinue the use of the burner, the user shall have qualified personnel carry out the following operations:

a Remove the power supply by disconnecting the power cord from the mains.

b Disconnect the fuel supply by means of the hand-operated shut-off valve and remove the control handwheels from their spindles.

Special warnings

- Make sure that the burner has, on installation, been firmly secured to the appliance, so that the flame is generated inside the appliance fire-box.
- Before the burner is started and, thereafter, at least once a year, have qualified personnel perform the following operations:

a set the burner fuel flow rate depending on the heat input of the appliance;

b set the flow rate of the combustion-supporting air to obtain a combustion efficiency level at least equal to the lower level required by the regulations in force;

c check the unit operation for proper combustion, to avoid any harmful or polluting unburnt gases in excess of the limits permitted by the regulations in force;

d make sure that control and safety devices are operating properly;

e make sure that exhaust ducts intended to discharge the products of combustion are operating properly;

f on completion of setting and adjustment operations, make sure that all mechanical locking devices of controls have been duly tightened;

g make sure that a copy of the burner use and maintenance instructions is available in the boiler room.

- In case of a burner shut-down, reser the control box by means of the RESET pushbutton. If a second shut-down takes place, call the Technical Service, **without trying to RESET further**.
- The unit shall be operated and serviced by qualified personnel only, in compliance with the regulations in force.

3) GENERAL INSTRUCTIONS DEPENDING ON FUEL USED

3a) ELECTRICAL CONNECTION

- For safety reasons the unit must be efficiently earthed and installed as required by current safety regulations.
- It is vital that all saftey requirements are met. In case of any doubt, ask for an accurate inspection of electrics by qualified personnel, since the manufacturer cannot be held liable for damages that may be caused by failure to correctly earth the equipment.
- Qualified personnel must inspect the system to make sure that it is adequate to take the maximum power used by the equipment shown on the equipment rating plate. In particular, make sure that the system cable cross section is adequate for the power absorbed by the unit.
- No adaptors, multiple outlet sockets and/or extension cables are permitted to connect the unit to the electric mains.
- An omnipolar switch shall be provided for connection to mains, as required by the current safety regulations.
- The use of any power-operated component implies observance of a few basic rules, for example:
  -do not touch the unit with wet or damp parts of the body and/or with bare feet;
  - do not pull electric cables;
  - do not leave the equipment exposed to weather (rain, sun, etc.) unless expressly required to do so;
  - do not allow children or inexperienced persons to use equipment;
- The unit input cable shall not be replaced by the user.
  In case of damage to the cable, switch off the unit and contact qualified personnel to replace.
  When the unit is out of use for some time the electric switch supplying all the power-driven components in the system (i.e. pumps, burner, etc.) should be switched off.

3b) FIRING WITH GAS, LIGHT OIL OR OTHER FUELS

GENERAL

- The burner shall be installed by qualified personnel and in compliance with regulations and provisions in force; wrong installation can cause injuries to people and animals, or damage to property, for which the manufacturer cannot be held liable.
- Before installation, it is recommended that all the fuel supply system pipes be carefully cleaned inside, to remove foreign matter that might impair the burner operation.
- Before the burner is commissioned, qualified personnel should inspect the following:

a the fuel supply system, for proper sealing;
b the fuel flow rate, to make sure that it has been set based on the firing rate required of the burner;
c the burner firing system, to make sure that it is supplied for the designed fuel type;
d the fuel supply pressure, to make sure that it is included in the range shown on the rating plate;
e the fuel supply system, to make sure that the system dimensions are adequate to the burner firing rate, and that the system is equipped with all the safety and control devices required by the regulations in force.

- When the burner is to remain idle for some time, the fuel supply tap or taps should be closed.

SPECIAL INSTRUCTIONS FOR USING GAS

Have qualified personnel inspect the installation to ensure that:

a the gas delivery line and train are in compliance with the regulations and provisions in force;
b all gas connections are tight;
c the boiler room ventilation openings are such that they ensure the air supply flow required by the current regulations, and in any case are sufficient for proper combustion.

- Do not use gas pipes to earth electrical equipment.
- Never leave the burner connected when not in use. Always shut the gas valve off.
- In case of prolonged absence of the user, the main gas delivery valve to the burner should be shut off.

Precautions if you can smell gas

a do not operate electric switches, the telephone, or any other item likely to generate sparks;
b immediately open doors and windows to create an air flow to purge the room;
c close the gas valves;
d contact qualified personnel.

- Do not obstruct the ventilation openings of the room where gas appliances are installed, to avoid dangerous conditions such as the development of toxic or explosive mixtures.

DIRECTIVES AND STANDARDS

Gas burners

European directives

-Regulation 2016/426/UE (appliances burning gaseous fuels)
-2014/35/UE (Low Tension Directive)
-2014/30/UE (Electromagnetic compatibility Directive)
-2006/42/EC (Machinery Directive)

Harmonized standards

-UNI EN 676 (Automatic forced draught burners for gaseous fuels)
-EN 55014-1 (Electromagnetic compatibility- Requirements for house hold appliances, electric tools and similar apparatus)
-EN 60204-1:2006 (Safety of machinery – Electrical equipment of machines.)
-CEI EN 60335-1 (Specification for safety of household and similar electrical appliances);
-CEI EN 60335-2-102 (Household and similar electrical appliances. Safety. Particular requirements for gas, oil and solid-fuel burning appliances having electrical connections).
-UNI EN ISO 12100:2010 (Safety of machinery - General principles for design - Risk assessment and risk reduction);

Light oil burners

European directives

-2014/35/UE (Low Tension Directive)
-2014/30/UE (Electromagnetic compatibility Directive)
-2006/42/EC (Machinery Directive)

Harmonized standards

-UNI EN 267-2011(Automatic forced draught burners for liquid fuels)
-EN 55014-1 (Electromagnetic compatibility- Requirements for house hold appliances, electric tools and similar apparatus)
-EN 60204-1:2006 (Safety of machinery – Electrical equipment of machines.)
-CEI EN 60335-1 (Specification for safety of household and similar electrical appliances);
-CEI EN 60335-2-102 (Household and similar electrical appliances. Safety. Particular requirements for gas, oil and solid-fuel burning appliances having electrical connections).
-UNI EN ISO 12100:2010 (Safety of machinery - General principles for design - Risk assessment and risk reduction);

Heavy oil burners

European Directives

-2014/35/UE (Low Tension Directive)
-2014/30/UE (Electromagnetic compatibility Directive)
-2006/42/EC (Machinery Directive)

Harmonized standards

-UNI EN 267(Automatic forced draught burners for liquid fuels)
-EN 55014-1 (Electromagnetic compatibility- Requirements for house hold appliances, electric tools and similar apparatus)
-EN 60204-1:2006 (Safety of machinery – Electrical equipment of machines.)
-CEI EN 60335-1 (Specification for safety of household and similar electrical appliances);
-CEI EN 60335-2-102 (Household and similar electrical appliances. Safety. Particular requirements for gas, oil and solid-fuel burning appliances having electrical connections).
-UNI EN ISO 12100:2010 (Safety of machinery - General principles for design - Risk assessment and risk reduction);

Gas - Light oil burners

European Directives

-Regulation 2016/426/UE (appliances burning gaseous fuels)
-2014/35/UE (Low Tension Directive)
-2014/30/UE (Electromagnetic compatibility Directive)
-2006/42/EC (Machinery Directive)

Harmonized standards

-UNI EN 676 (Automatic forced draught burners for gaseous fuels)
-UNI EN 267(Automatic forced draught burners for liquid fuels)
-EN 55014-1 (Electromagnetic compatibility- Requirements for house hold appliances, electric tools and similar apparatus)
-EN 60204-1:2006 (Safety of machinery – Electrical equipment of machines.)
-CEI EN 60335-1 (Specification for safety of household and similar electrical appliances);
-CEI EN 60335-2-102 (Household and similar electrical appliances. Safety. Particular requirements for gas, oil and solid-fuel burning appliances having electrical connections).
-UNI EN ISO 12100:2010 (Safety of machinery - General principles for design - Risk assessment and risk reduction);

Gas - Heavy oil burners

European directives:

-Regulation 2016/426/UE (appliances burning gaseous fuels)
-2014/35/UE (Low Tension Directive)
-2014/30/UE (Electromagnetic compatibility Directive)
-2006/42/EC (Machinery Directive)

Harmonized standards

-UNI EN 676 (Automatic forced draught burners for gaseous fuels)
-EN 55014-1 (Electromagnetic compatibility- Requirements for house hold appliances, electric tools and similar apparatus)
-EN 60204-1:2006 (Safety of machinery – Electrical equipment of machines.)
-CEI EN 60335-1 (Specification for safety of household and similar electrical appliances);
-CEI EN 60335-2-102 (Household and similar electrical appliances. Safety. Particular requirements for gas, oil and solid-fuel burning appliances having electrical connections).
-UNI EN ISO 12100:2010 (Safety of machinery - General principles for design - Risk assessment and risk reduction);

Industrial burners

European directives

-Regulation 2016/426/UE (appliances burning gaseous fuels)
-2014/35/UE (Low Tension Directive)
-2014/30/UE (Electromagnetic compatibility Directive)
-2006/42/EC (Machinery Directive)

Harmonized standards

-EN 55014-1 (Electromagnetic compatibility- Requirements for house hold appliances, electric tools and similar apparatus)
-EN 746-2 (Industrial thermoprocessing equipment - Part 2: Safety requirements for combustion and fuel handling systems)
-UNI EN ISO 12100:2010 (Safety of machinery - General principles for design - Risk assessment and risk reduction);
-EN 60204-1:2006 (Safety of machinery – Electrical equipment of machines.)
-EN 60335-2 (Electrical equipment of non-electric appliances for household and similar purposes. Safety requirements)

Burner data plate

For the following information, please refer to the data plate:

- burner type and burner model: must be reported in any communication with the supplier
- burner ID (serial number): must be reported in any communication with the supplier
- date of production (year and month)
- information about fuel type and network pressure

Type	--
Model	--
Year	--
S.Number	--
Output	--
Oil Flow	--
Fuel	--
Category	--
Gas Pressure	--
Viscosity	--
El.Supply	--
El.Consump.	--
Fan Motor	--
Protection	--
Drwaing n°	--
P.I.N.	--

SYMBOLS USED

WARNING! Failure to observe the warning may result in irreparable damage to the unit or damage to the environment

DANGER! Failure to observe the warning may result in serious injuries or death.

WARNING! Failure to observe the warning may result in electric shock with lethal consequences

Figures, illustrations and images used in this manual may differ in appearance from the actual product.

BURNER SAFETY

The burners - and the configurations described below - comply with the regulations in force regarding health, safety and the environment. For more in-depth information, refer to the declarations of conformity that are an integral part of this Manual.

DANGER! Incorrect motor rotation can seriously damage property and injure people.

Residual risks deriving from misuse and prohibitions

The burner has been built in order to make its operation safe; there are, however, residual risks.

Do not touch any mechanical moving parts with your hands or any other part of your body. Injury hazard
Do not touch any parts containing fuel (i.e. tank and pipes). Scalding hazard
Do not use the burner in situations other than the ones provided for in the data plate.
Do not use fuels other than the ones stated.
Do not use the burner in potentially explosive environments.
Do not remove or by-pass any machine safety devices.
Do not remove any protection devices or open the burner or any other component while the burner is running.
Do not disconnect any part of the burner or its components while the burner is running.
Untrained staff must not modify any linkages.

After any maintenance, it is important to restore the protection devices before restarting the machine.
All safety devices must be kept in perfect working order.
Personnel authorized to maintain the machine must always be provided with suitable protections.

ATTENTION: while running, the parts of the burner near the generator (coupling flange) are subject to overheating. Where necessary, avoid any contact risks by wearing suitable PPE.

PART I: INSTALLATION MANUAL

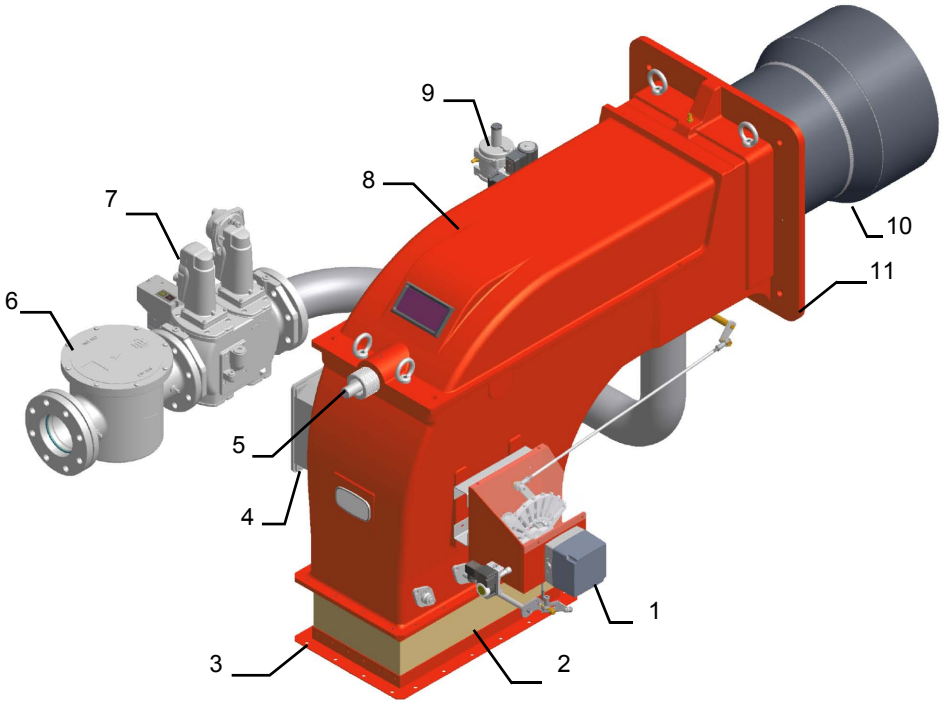

Note: the figure is indicative only

1 Actuator
2 Bellows
3 Air inlet flange
4 Junction box
5 Combustion head adjusting screw
6 Gas filter
7 Gas train
8 Cover
9 Ignitor light oil train
10 Blast tube + Combustion head
11 burner flange

Fig. 1

Gas operation: the gas coming from the supply line passes through filter, gas valves and pressure regulator. This one forces the pressure in the utilisation limits. The electric actuator , that moves proportionally the air damper and the gas butterfly valve, uses an adjusting cam with variable shape. This one allows the optimisation of the gas flue values, as to get an efficient combustion. The combustion head positioning determines the burner's output. The combustion head determines the energetic quality and the geometry of the flame. Fuel and comburent are routed into separated ways as far as the zone of flame generation (combustion chamber).

The control panel , placed on the burner's front side, shows each operating stage.

GENERAL FEATURES

This series of industrial burners is designed for all those applications that require big-sized air fans or air-flue heat exchangers to be installed in sound-proof areas to reduce noise. They can be provided with built-in or separate-mounted control panel (console or wall-mounted).

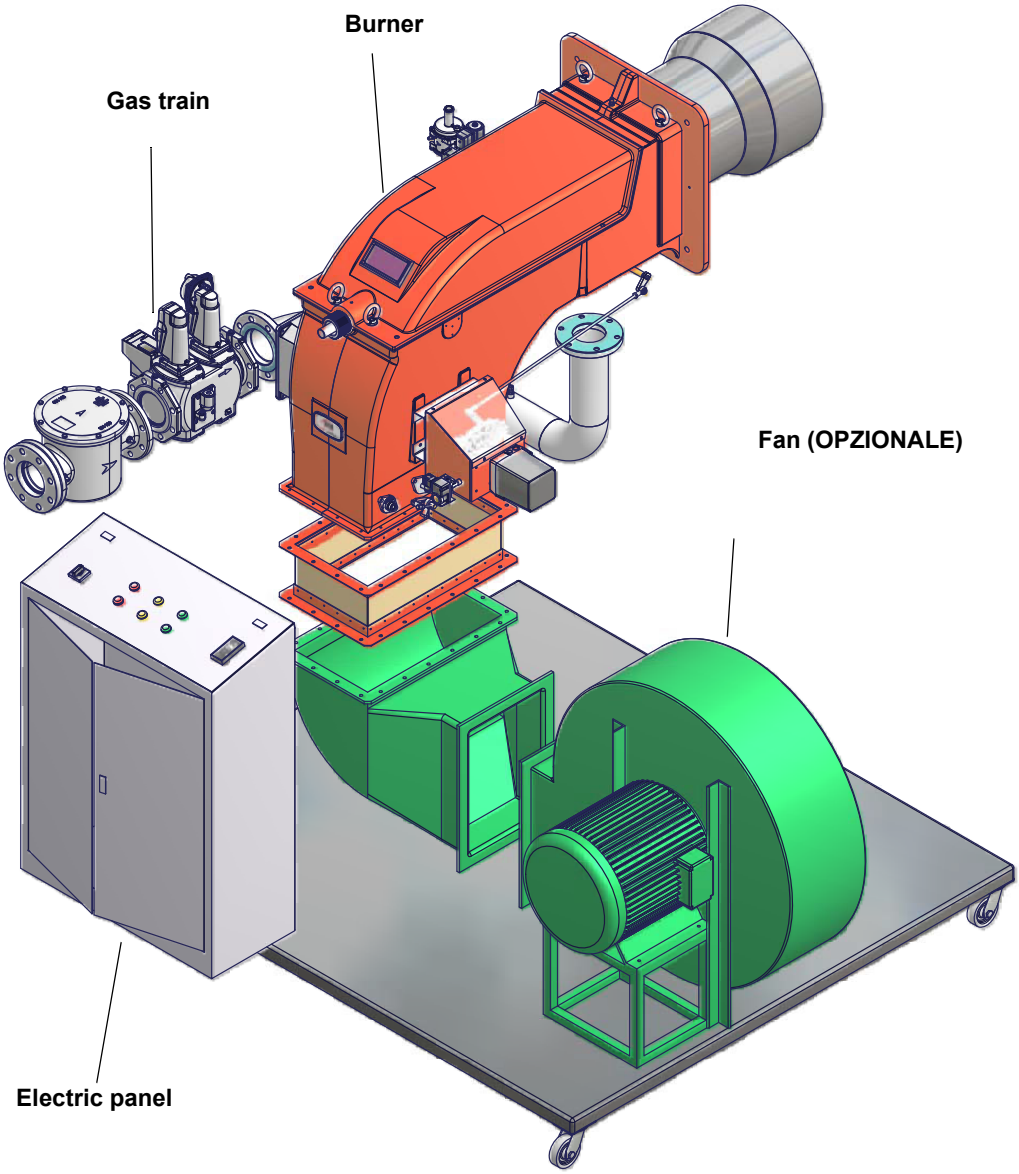

Note: the picture shows one of the possible installations. Fan and electrical panel can be placed according to the customer needs.

How to select the burner

To check if the burner is suitable for the boiler to which it must be installled, the following parameters are needed:

- fuel
- furnace input, in kW or kcal/h (kW = kcal/h / 860);
- boiler type;
- combustion chamber type (3-smoke pass, reverse flame, other)
- temperature or pressure of the thermal carrier fluid
- Comburent air temperature
- Air duct positioning
- Pressure in the combustion chamber
- Elevation (altitude) of burner installation
- Gas train (only for gas burners)
- Pumping unit (only for light-oil or heavy-oil burners)
- Air fan
- Bilt-in or separated control panel
- backpressure (data are available on the boiler's ID plate or in the user's manual).

Burners provided with built-in control panel are designed for IP40 index of protection. For other values of IP, please contact the manifacturer Technical Dpt.

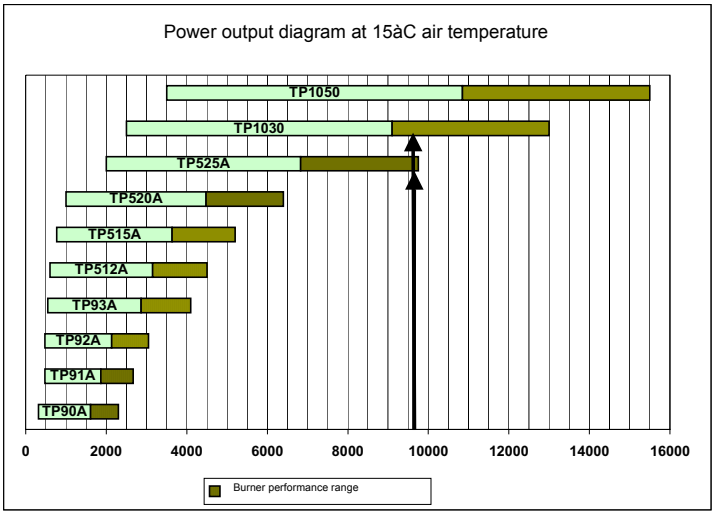

Data requested:

- furnace input;
- air temperature
- altitude
- generator pressure or temperature

Example:

- furnace input: 9600kW
- air temperature: 15°C
- altitude: 0m

See the diagram in , as to find the burners that better suite the power range requested in the exmple (9600kW). Once the models are founded out, the choice regards technical and economical features. Technical features can be summarised in a higher modulation ratio (fewer start-ups, less consumption, fewer swigings in the generator temperature and pressure values.

Gas categories and countries of application

GAS CATEGORY	COUNTRY
I_{2H}	AT, ES, GR, SE, FI, IE, HU, IS, NO, CZ, DK, GB, IT, PT, CY, EE, LV, SI, MT, SK, BG, LT, RO, TR, CH
I_{2E}	LU, PL
$I_{2E(R)B}$	BE
I_{2EK}	NL
I_{2ELL}	DE
I_{2Er}	FR

Checking the proper gas train size

To check the proper gas train size, it is necessary to the available gas pressure value upstream the burner's gas valve. Then subtract the backpressure. The result is called **pgas.** Draw a vertical line matching the furnace input value (600kW, in the example), quoted on the x-axis, as far as intercepitng the network pressure curve, according to the installed gas train (DN65, in the example). From the interception point, draw an horizontal line as far as matching, on the y-axis, the value of pressure necessary to get the requested furnace input. This value must be lower or equal to the **pgas** value, calculated before.

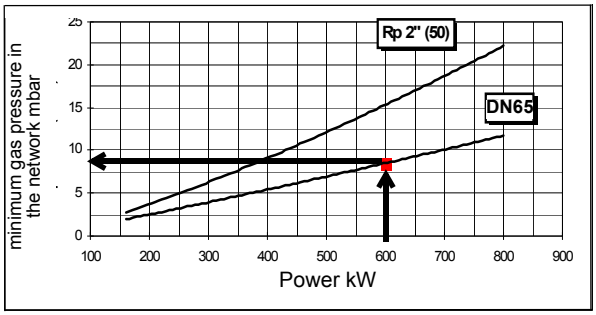

BURNER SPECIFICATIONS

Burner model identification

Burners are identified by burner type and model. Burner model identification is described as follows.

Type **TP90A** (1) Model **M-.** (2) **PR.** (3) **S.** (4) ***.** (5) **A.** (6) **1.** (7) **80** (8)	
(1) BURNER TYPE	**TP90A**
(2) FUEL	M - Natural gas L - LPG
(3) OPERATION (Available versions)	PR - Progressive MD - Fully modulating
(4) BLAST TUBE	S - Standard
(5) DESTINATION COUNTRY	* - see data plate
(6) BURNER VERSION	A - Standard
(7) EQUIPMENT	1 = 2 valves + gas proving system 8 = 2 valves + gas proving system + maximum pressure switch
(8) GAS CONNECTION see Specifications	50 = Rp2 65 = DN65 80 = DN80 100 = DN100

Fuel

WARNING! The burner must be used only with the fuel specified in the burner data plate .

Type	--
Model	--
Year	--
S.Number	--
Output	--
Oil Flow	--
Fuel	--
Category	--
Gas Pressure	--
Viscosity	--
El.Supply	--
El.Consump.	--

The burner technical specifications, described in this manual, refer to natural gas (calorific net value Hi = 9.45 kWh/Stm^3, density ρ = 0.717 Kg/Stm^3). For different fuel such as LPG, town gas and biogas, multiply the values of flow and pressure by th corrective factors shown in the table below.

Fuel	**Hi** (KWh/Stm^3)	**ρ** (kg/Stm^3)	f_Q	f_p
LPG	26,79	2,151	0,353	0,4
Town gas	4,88	0,6023	1,936	3,3
Biogas	6,395	1,1472	1,478	3,5

For example, to obtain the flow and pressure values for the biogas:

$$Q_{biogas} = Q_{naturalGas} \cdot 1,478$$

$$p_{biogas} = p_{naturalGas} \cdot 3,5$$

ATTENTION! The combustion head type and the settings depend on the fuel. The burner must be used only for its intended purpose specified in the burner data plate .

ATTENTION! The corrective factors in the above table depend on the gas composition, so on the calorifc value and the density of the gas. The above value can be taken only as reference.

Technical specifications

Note: the Output values are referred to comburent air temperature lower than 50°C

BURNER TYPE		TP90A	TP91A	TP92A	TP93A
Output	min. - max. kW	320-2300	480 - 2670	480 - 3050	550 - 4100
Fuel		Natural gas - GPL			
Category metano		(see next paragraph)			
Gas rate **metano**	min. - max. (Stm^3/h)	34 - 243	51 - 283	51 - 323	58 - 434
Portata GPL	min. - max. (Stm^3/h)	11,9 - 86	17,9 - 100	17,19 - 114	21 - 153
Category GPL		$I_{3B/P}$			
Power supply		230V 3~ / 400V 3N~ 50Hz			
Total power consumption (fan motor excluded)	kW	0,5			
Fan motor power consumption	kW	see fan ID plate			
Protection		IP40			
Operation		Progressive - Fully modulating			
Pressure		(see Note 2)			
Gas train 50	øValves / Gas connection	2" / Rp 2			
Gas train 65	øValves / Gas connection	2"1/2 / DN65			
Gas train 80	øValves / Gas connection	3" / DN80			
Gas train 100	øValves / Gas connection	4" / DN100			
Operating temperature	°C	-10 ÷ +50			
Storage Temperature	°C	-20 ÷ +60			
Working service*		Intermittent			

BURNER TYPE		TP512A	T515A	T520A	TP525A
Output	min. - max. kW	600-4.500	770 - 5.200	1.000 - 6.400	2.000 - 9.750
Fuel		Natural gas - GPL			
Category metano		(see next paragraph)			
Gas metano	min. - max. (Stm^3/h)	63 - 476	81 - 550	106 - 677	212 - 1.032
Portata GPL	min. - max. (Stm^3/h)	22 - 168	29 - 194	37 - 239	75 - 364
Power supply		230V 3~ / 400V 3N~ 50Hz			
Category GPL		$I_{3B/P}$			
Total power consumption (fan motor excluded)	kW	0,5			
Fan motor power consumption	kW	see fan ID plate			
Protection		IP40			
Operation		Progressive - Fully modulating			
Pressure		(see Note 2)			
Gas train 50	øValves / Gas connection	2" / Rp 2			
Gas train 65	øValves / Gas connection	2"1/2 / DN65			
Gas train 80	øValves / Gas connection	3" / DN80			
Gas train 100	øValves / Gas connection	4" / DN100			
Operating temperature	°C	-10 ÷ +50			
Storage Temperature	°C	-20 ÷ +60			
Working service*		Intermittent			

Note1:	**all gas flow rates are referred to Stm^3/h (1013 mbar absolute pressure, 15 °C temperature) and are valid for G20 natural gas (net calorific value H_i = 34.02 MJ/Stm^3).**
Note2:	**Maximum gas pressure = 500mbar (with Siemens VGD gas valves / Dungs MBC gas valves).** **Minimum gas pressure = see gas curves.**

Note1:	**All gas flow rates are referred to Stm^3 / h (1.013 mbar absolute pressure, 15 °C temperature) and are valid for G20 gas (net calorific value H_i = 34,02 MJ / Stm^3); for L.P.G. (net calorific value H_i = 93,5 MJ / Stm^3)**
Note2:	**Maximum gas pressure = 360 mbar (with Dungs MBDLE)** **= 500 mbar (with Siemens VGD or Dungs MultiBloc MBE)** **Minimum gas pressure = see gas curves.**
Note3:	**Burners are suitable only for indoor operation with a maximum relative humidity of 80 %**

*** NOTE ON THE BURNER WORKING SERVICE:** for safety reasons, one controlled shutdown must be performed every 24 hours of continuous operation.

Overall dimensions (mm)

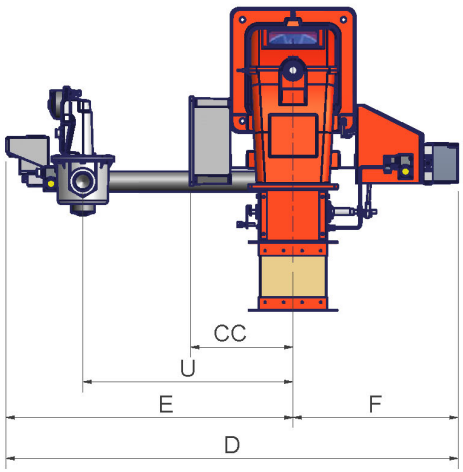

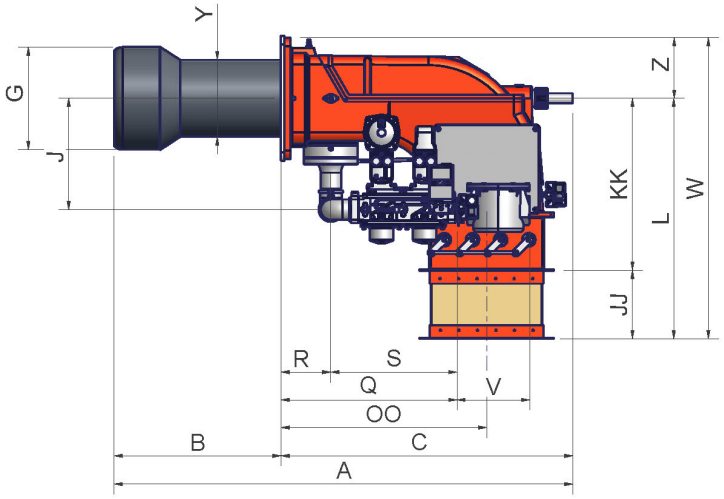

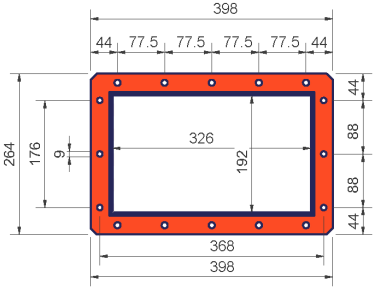

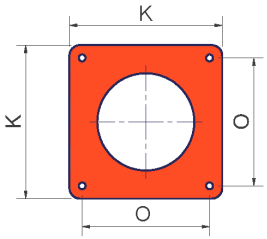

Air inlet and burner flanges

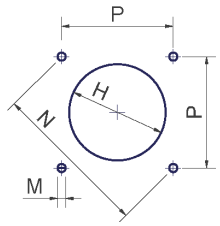

Boiler recommended drilling template

	DN	A	B	C	CC	D	E	F	G	H	J	JJ	K	KK	L	M	N	O min	O max	OO	P	Q	R	S	U	V	W	Y	Z
TP90A	50	1356	490	866	305	1342	852	490	234	264	329	185	360	510	695	M12	424	280	310	610	300	522	148	374	624	216	875	198	180
TP90A	65	1356	490	866	305	1447	957	490	234	264	288	185	360	510	695	M12	424	280	310	610	300	551	148	403	750	293	875	198	180
TP90A	80	1356	490	866	305	1449	959	490	234	264	307	185	360	510	695	M12	424	280	310	610	300	592	148	444	750	322	875	198	180
TP90A	100	1356	490	866	305	1539	1049	490	234	264	447	185	360	510	695	M12	424	280	310	610	300	672	148	524	824	382	875	198	180
TP91A	50	1356	490	866	305	1342	852	490	265	295	329	185	360	510	695	M12	424	280	310	610	300	522	148	374	624	216	875	228	180
TP91A	65	1356	490	866	305	1447	957	490	265	295	288	185	360	510	695	M12	424	280	310	610	300	551	148	403	750	293	875	228	180
TP91A	80	1356	490	866	305	1449	959	490	265	295	307	185	360	510	695	M12	424	280	310	610	300	592	148	444	750	322	875	228	180
TP91A	100	1356	490	866	305	1539	1049	490	265	295	447	185	360	510	695	M12	424	280	310	610	300	672	148	524	824	382	875	228	180
TP92A	50	1356	490	866	305	1342	852	490	269	299	329	185	360	510	695	M12	424	280	310	610	300	522	148	374	624	216	875	228	180
TP92A	65	1356	490	866	305	1447	957	490	269	299	288	185	360	510	695	M12	424	280	310	610	300	551	148	403	750	293	875	228	180
TP92A	80	1356	490	866	305	1449	959	490	269	299	307	185	360	510	695	M12	424	280	310	610	300	592	148	444	750	322	875	228	180
TP92A	100	1356	490	866	305	1539	1049	490	269	299	447	185	360	510	695	M12	424	280	310	610	300	672	148	524	824	382	875	228	180
TP93A	50	1361	495	866	305	1342	852	490	304	344	329	185	360	510	695	M12	424	280	310	610	300	522	148	374	624	216	875	228	180
TP93A	65	1361	495	866	305	1447	957	490	304	344	288	185	360	510	695	M12	424	280	310	610	300	551	148	403	750	293	875	228	180
TP93A	80	1361	495	866	305	1449	959	490	304	344	307	185	360	510	695	M12	424	280	310	610	300	592	148	444	750	322	875	228	180
TP93A	100	1361	495	866	305	1539	1049	490	304	344	447	185	360	510	695	M12	424	280	310	610	300	672	148	524	824	382	875	228	180

DN = gas valves size.

NOTE: the overall dimensions are referred to burners provided with Siemens VGD valves.

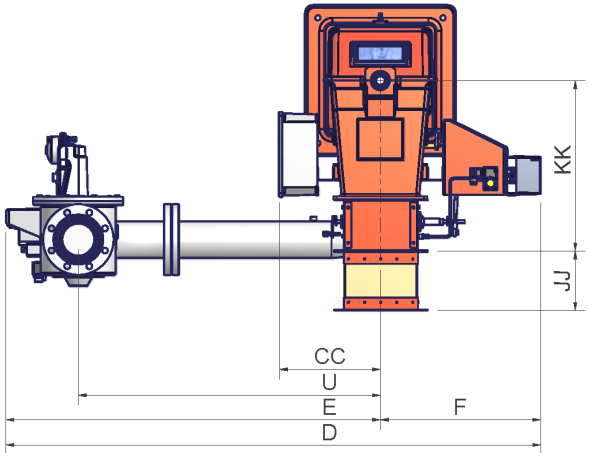

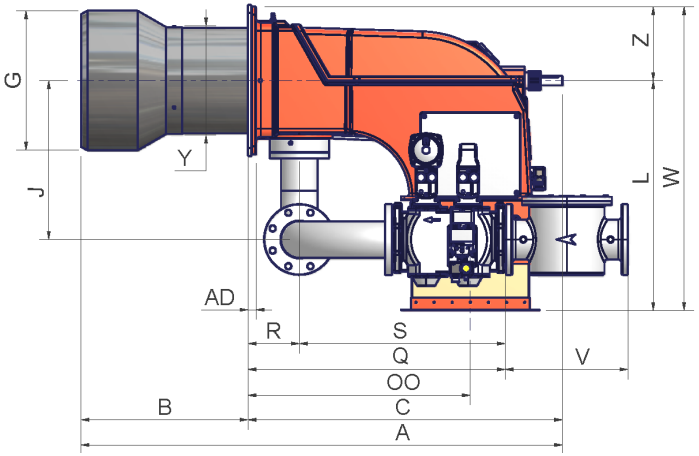

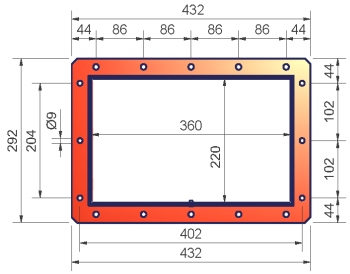

Air inlet flange

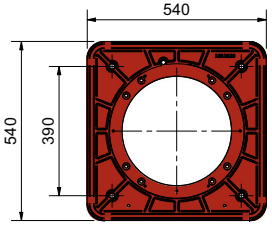

Burner flange

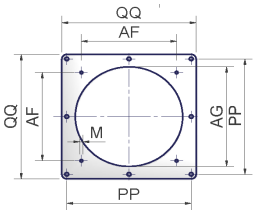

Recommended burner counterflange

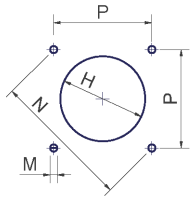

Boiler recommended drilling template

	DN	A	AD	AF	AG	B	C	CC	D	E	F	G	H	J	JJ	K	KK	L	M	N	O	OO	P	PP	Q	QQ	R	S	U	V	W	Y	Z
TP512A	50	1475	25	x	x	530	955	314	1477	978	499	340	380	337	185	540	530	715	M14	552	390	693	390	x	685	x	160	525	750	216	945	328	230
TP512A	65	1475	25	x	x	530	955	314	1456	957	499	340	380	337	185	540	530	715	M14	552	390	693	390	x	563	x	160	403	750	292	945	328	230
TP512A	80	1475	25	x	x	530	955	314	1458	959	499	340	380	354	185	540	530	715	M14	552	390	693	390	x	604	x	160	444	750	322	945	328	230
TP512A	100	1475	25	x	x	530	955	314	1548	1049	499	340	380	392	185	540	530	715	M14	552	390	693	390	x	684	x	160	524	824	382	945	328	230
TP515A	50	1491	25	x	x	530	971	314	1477	978	499	380	420	337	185	540	530	715	M14	552	390	693	390	x	685	x	160	525	750	216	945	328	230
TP515A	65	1491	25	x	x	530	971	314	1456	957	499	380	420	337	185	540	530	715	M14	552	390	693	390	x	563	x	160	403	750	292	945	328	230
TP515A	80	1491	25	x	x	530	971	314	1458	959	499	380	420	354	185	540	530	715	M14	552	390	693	390	x	604	x	160	444	750	322	945	328	230
TP515A	100	1491	25	x	x	530	971	314	1548	1049	499	380	420	392	185	540	530	715	M14	552	390	693	390	x	684	x	160	524	824	382	945	328	230
TP520A	50	1497	25	x	x	530	977	314	1477	978	499	400	440	337	185	540	530	715	M14	552	390	693	390	x	685	x	160	525	750	216	945	340	230
TP520A	65	1497	25	x	x	530	977	314	1456	957	499	400	440	337	185	540	530	715	M14	552	390	693	390	x	563	x	160	403	750	292	945	340	230
TP520A	80	1497	25	x	x	530	977	314	1458	959	499	400	440	354	185	540	530	715	M14	552	390	693	390	x	604	x	160	444	750	322	945	340	230
TP520A	100	1497	25	x	x	530	977	314	1548	1049	499	400	440	392	185	540	530	715	M14	552	390	693	390	x	684	x	160	524	824	382	945	340	230
TP525A	50	1497	25	390	440	530	977	314	1570	1071	499	434	484*	494	185	540	530	715	M14	721*	390	693	510*	510*	765	550*	160	605	843	216	945	340	230
TP525A	65	1497	25	390	440	530	977	314	1548	1049	499	434	484*	494	185	540	530	715	M14	721*	390	693	510*	510*	643	550*	160	483	843	292	945	340	230
TP525A	80	1497	25	390	440	530	977	314	1583	1084	499	434	484*	494	185	540	530	715	M14	721*	390	693	510*	510*	695	550*	160	535	875	322	945	340	230
TP525A	100	1497	25	390	440	530	977	314	1666	1167	499	434	484*	494	185	540	530	715	M14	721*	390	693	510*	510*	802	550*	160	642	942	382	945	340	230

DN = gas valves size.

* It is recommended to fit a counterflange between burner and boiler. As an alternative, make a smaller hole H, but greather than Y and fit the blast tube from the internal side of boiler

NOTE: the overall dimensions are referred to burners provided with Siemens VGD valves.

Performance Curves

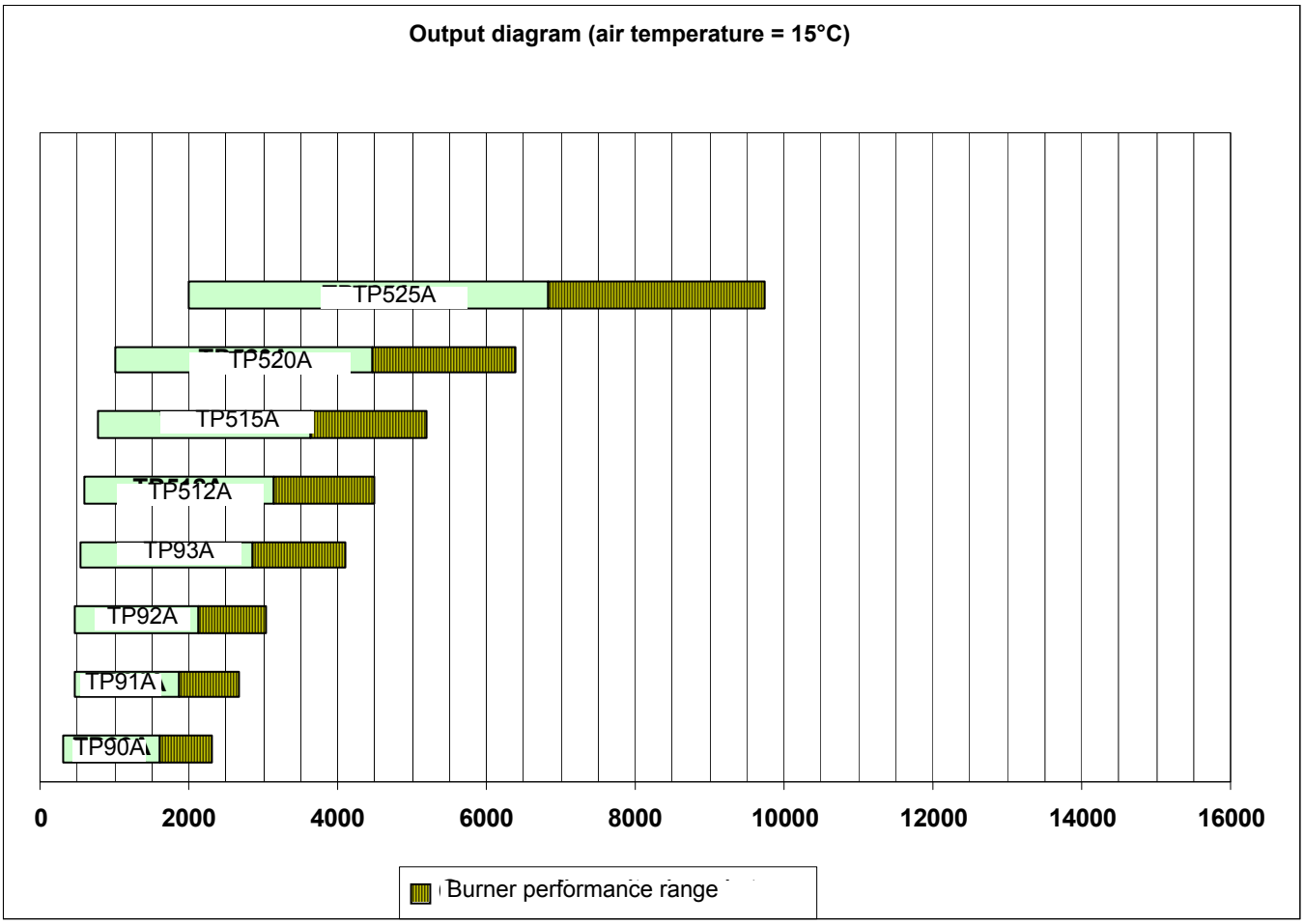

To get the input in kcal/h, multiply value in kW by 860.

Data are referred to standard conditions: atmospheric pressure at 1013mbar, ambient temperature at 15°C

Fan installation

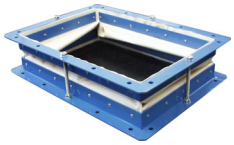

Connect the air duct to the burner by means of the bellows unit provided together with the burner (see the picture below).Install the bellows units provided as explained on pages 13-14.

ATTENTION! The bellows unit provided is made of canvas and is provided with blocking spacers to avoid breaking it during installation: first place the bellows unit between flanges, then remove the spacers. Canvas has to be stretched after the installation, but not stressed.

ATTENTION! the air duct dimensioning must be perforformed according to the flow rate, the temperature, the distance between the fan and the burner and according to the fan features as well..

ATTENTION! It is suggested to install the fan on vibration-damping supports in order to reduce vibration propagation.

Pressure in the Network / gas flow rate curves (natural gas)

TP90A

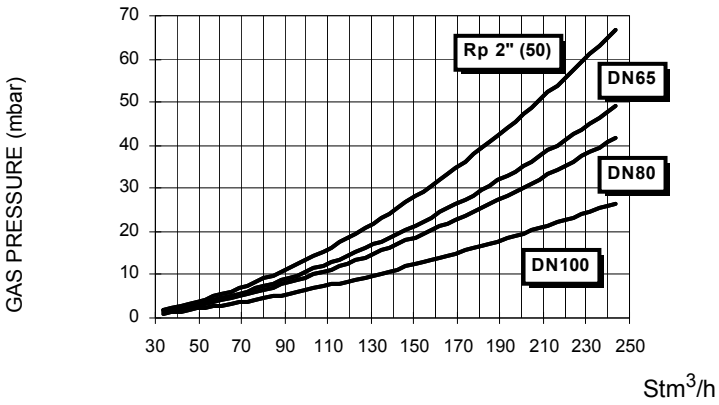

TP91A

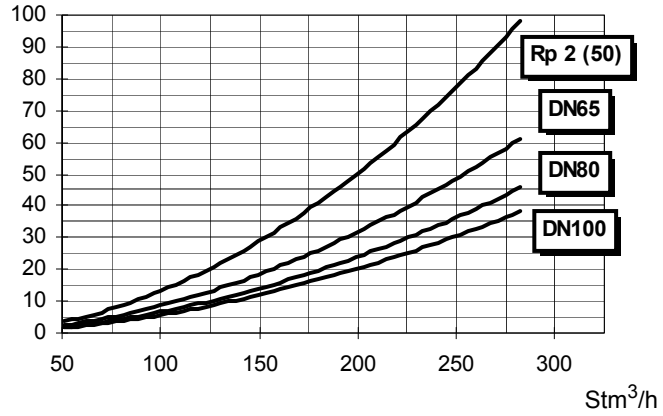

TP92A

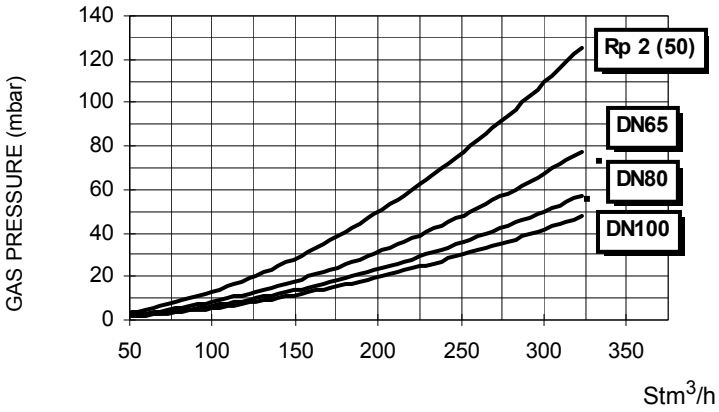

TP93A

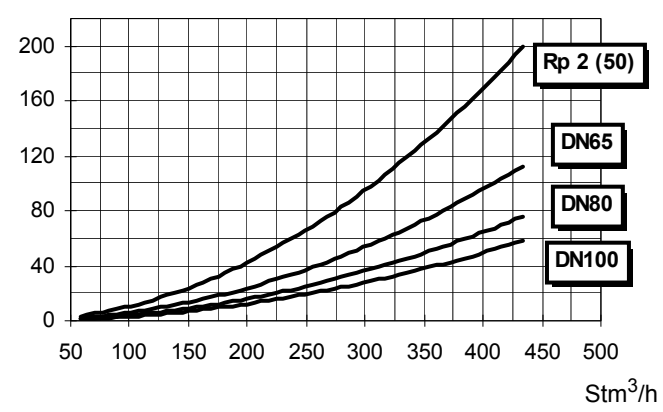

TP512A

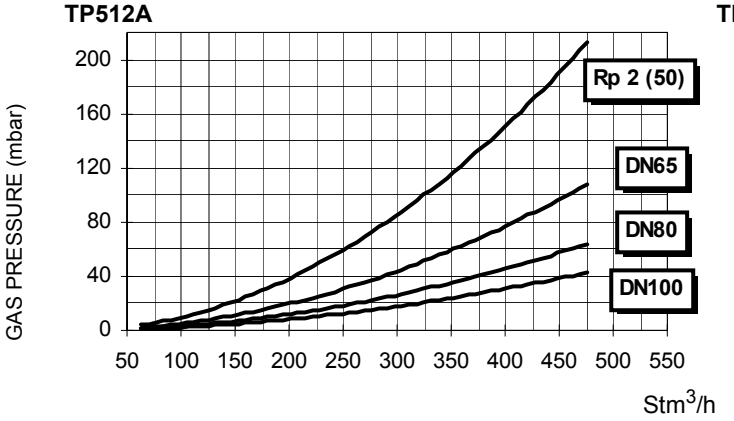

TP515A

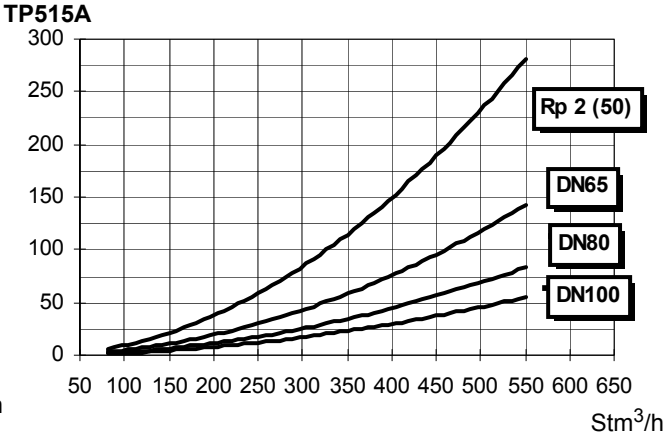

TP520A

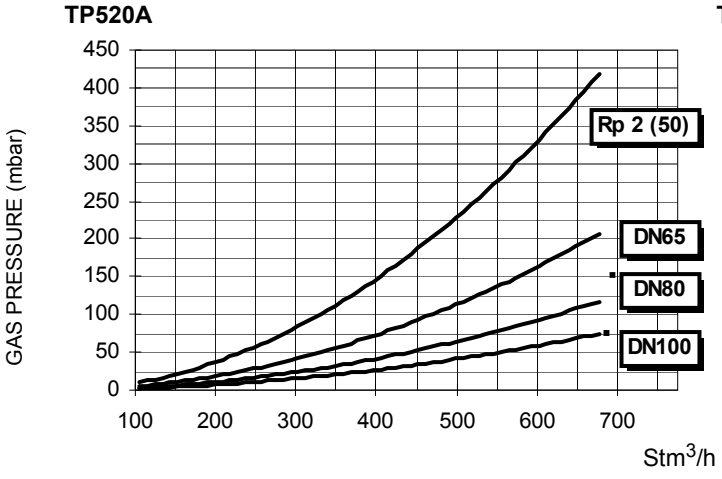

TP525A

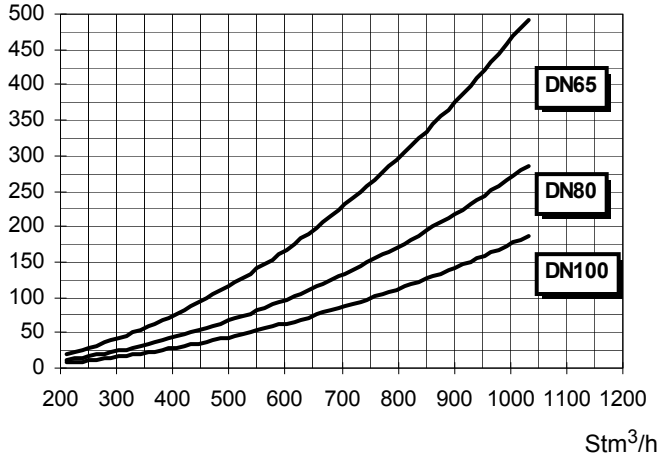

Caution: the gas rate value is quoted on the x-axis, the related network pressure is quoted on the y-axis (pressure value in the combustion chamber is not included). To know the minimum pressure at the gas train inlet, necessary to get the requested gas rate, add the pressure value in the combustion chamber to the value read on the y-axis.

MOUNTING AND CONNECTING THE BURNER

Packing

The burners are despatched in wooden crates whose dimensions are:

9xA series: 1730mm x 1280mm x 1020mm (L x P x H)

5xxA series: 1730mm x 1430mm x 1130mm (L x P x H)

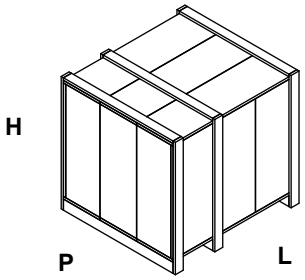

Packing cases of this type are affected by humidity and are not suitable for stacking.

The following are placed in each packing case:

- burner with gas train detached;
- gasket to be inserted between the burner and the boiler;
- bellows unit for air inlet connection
- envelope containing this manual.

To get rid of the burner's packing, follow the procedures laid down by current laws on disposal of materials.

Handling the burner

⚠	**ATTENTION! The lhandling operations must be carried out by specialised and trained personnel. If these operations are not carried out correctly, the residual risk for the burner to overturn and fall down still persists.**
	To move the burner, use means suitable to support its weight (see paragraph "Technical specifications").

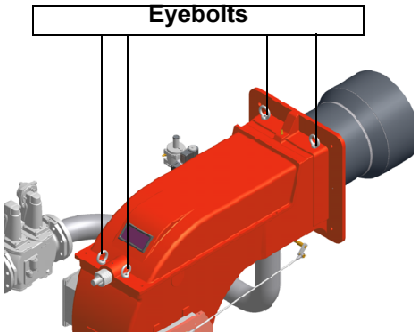

The burner is provided with eyebolts, for handling operations.

Fitting the burner to the boiler

To install the burner into the boiler, proceed as follows:

1 make a hole on the closing door of the combustion chamber as described on paragraph "Overall dimensions")
2 place the burner to the boiler: lift it up and handle it according to the procedure described on paragraph "Handling the burner";
3 place the stud bolts (5) on boiler's door, according to the burner drilling template described on paragraph "Overall dimensions";
4 fasten the stud bolts;
5 place the gasket on the burner flange;
6 install the burner into the boiler;
7 fix the burner to the stud bolts, by means of the fixing nuts, according to the next picture.
8 After fitting the burner to the boiler, ensure that the gap between the blast tube and the refractory lining is sealed with appropriate insulating material (ceramic fibre cord or refractory cement).

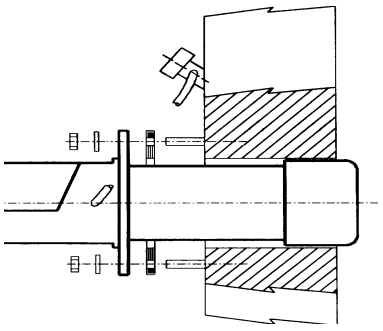

Keys

1 Burner
2 Fixing nut
3 Washer
4 Sealing gasket
5 Stud bolt
7 Blast tube

Fan installation

Pay attention when designing the air duct: dimensioning must be performed according to the flow rate, the temperature, the distance between the fan and the burner and according to the fan features as well.

⚠	**ATTENTION!** The bellows unit provided is made of canvas and is provided with blocking spacers to avoid breaking it during installation: **first** place the bellows unit between flanges, **then** remove the spacers. Canvas has to be stretched after the installation, but not stressed.

The burner is designed to work mounted as shown in the picture below. For different installations, please contact the Technical Department.

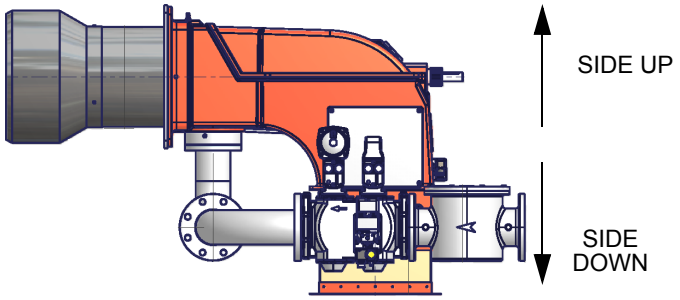

Duo-block burner orientation.

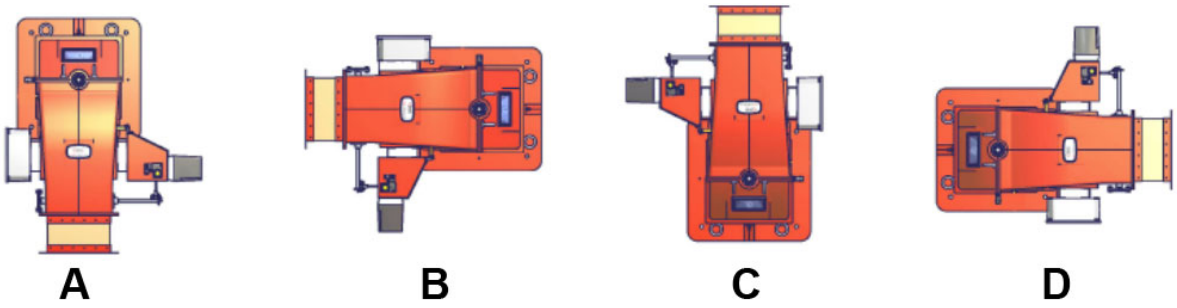

Duo-block burner orientation to be specified at the order.

Matching the burner to the boiler

The burners described in this manual have been tested with combustion chambers that comply with EN676 regulation and whose dimensions are described in the diagram . In case the burner must be coupled with boilers with a combustion chamber smaller in diameter or shorter than those described in the diagram, please contact the supplier, to verify that a correct matching is possible, with respect of the application involved. To correctly match the burner to the boiler verify the necessary input and the pressure in combustion chamber are included in the burner performance curve; otherwise the choice of the burner must be revised consulting the burner manufacturer. To choose the blast tube lenght follow the instructions of the boiler manufacturer. In absence of these consider the following:

- Cast-iron boilers, three pass flue boilers (with the first pass in the rear part): the blast tube must protrude no more than 100 mm into the combustion chamber.
- Pressurised boilers with flame reversal: in this case the blast tube must penetrate at least 50 - 100 mm into combustion chamber in respect to the tube bundle plate.

The length of the blast tubes does not always allow this requirement to be met, and thus it may be necessary to use a suitably-sized spacer to move the burner backwards or to design a blast tube tha suites the utilisation (please, contact the manifacturer).

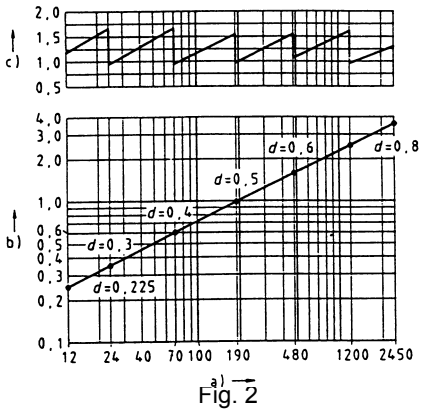

Fig. 2

Key

a) Heat output in kW

b) Lenght of the flame tube in meters

c) Flame tube firing intensity in MW/m^3

d) Combustion chamber diameter (m)

Fig. 2 - Firing intensity, diameter and lenght of the test flame tube as a function of the heat input in kW.

Gas train connections

The diagrams show the components of the gas trai included in the delivery and which must be fitted by the installer.The diagrams are in compliance with the current laws.

⚠	**ATTENTION:** BEFORE EXECUTING THE CONNECTIONS TO THE GAS PIPE NETWORK, BE SURE THAT THE MANUAL CUTOFF VALVES ARE CLOSED.

Gas train - 1 - Gas train with valves group VGD 20/40 with built-in gas pressure governor + VPS504 gas proving system

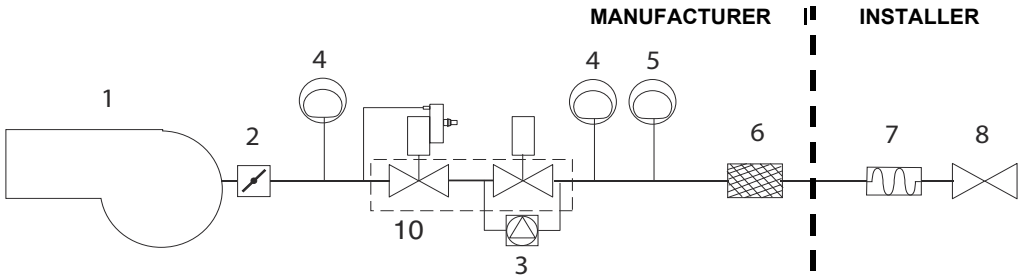

Gas train - 4 - Gas train with valves group VGD 20/40.. with built-in gas pressure governor + PGCP gas leakage pressure switch

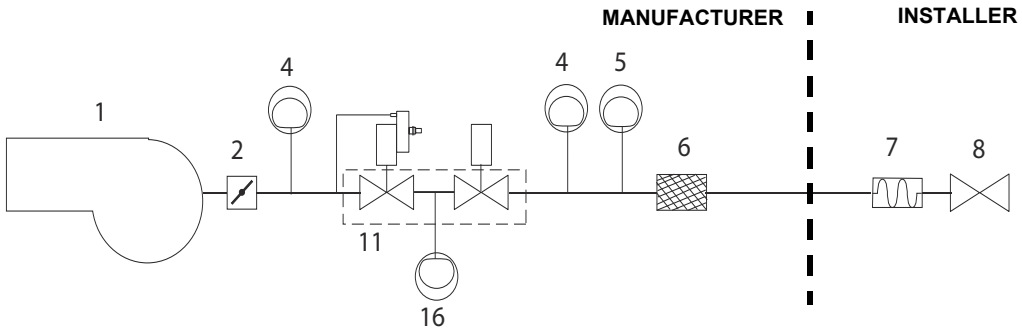

*Note: the maximum gas pressure switch can be mounted either upstream or downstream the gas valve but upstream the butterfly gas valve (see item no.4 in the scheme above).

Keys

1 Burner
2 Butterfly valve
3 Gas proving system
4 Maximum gas pressure switch (option*)
5 Minimum gas pressure switch
6 Gas filter
7 Bellow joint
8 Manual cutoff valve
10 VGD Valves group
16 PGCP gas leakage pressure switch

Connection diagram of the air pressure switch to the burner air conduct

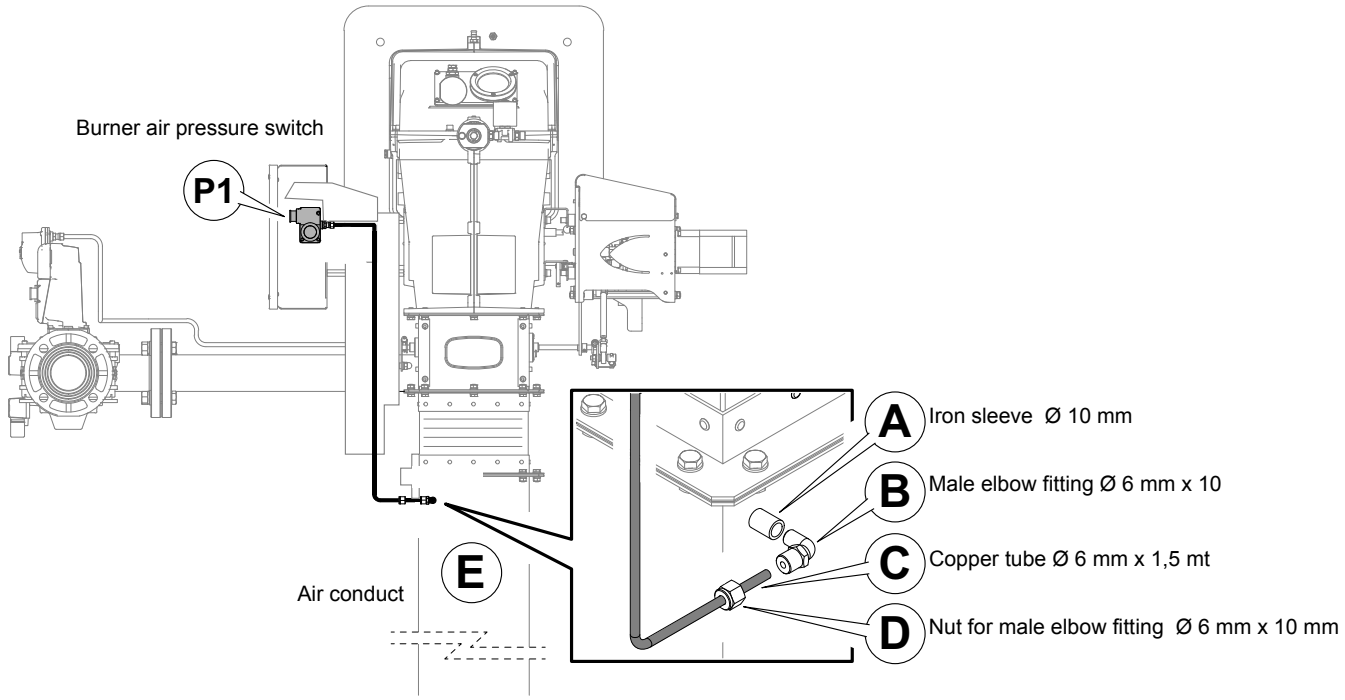

Copper tube connection Ø 6 mm:

- Drill the air duct (with hole from Ø 10 mm);
- Fit sleeve **A** (Ø 10 mm) and weld it on channel **E**;
- Assemble in sequence the **B-D** details on the tube (Ø 6 mm) **C** appropriately shaped up to the connection on the air pressure switch (**P1**).

GAS TRAIN CONNECTIONS

The diagrams show the components of the gas train included in the delivery and which must be fitted by the installer.The diagrams are in compliance with the current laws.

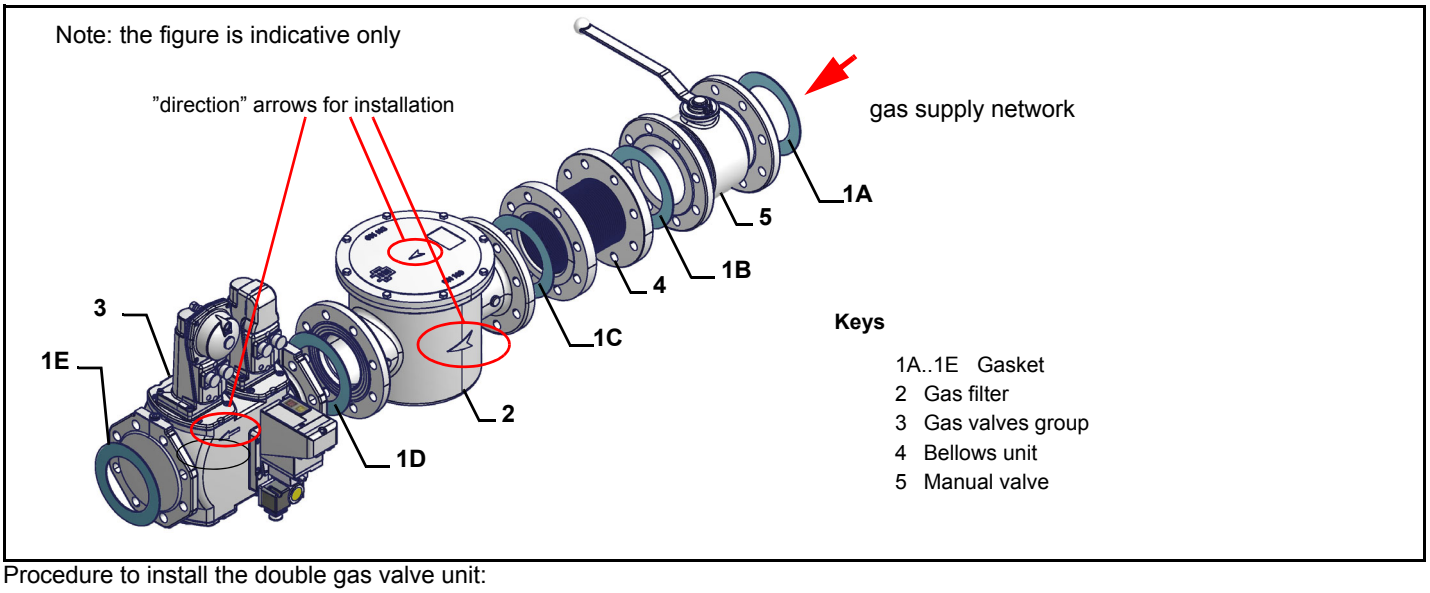

Procedure to install the double gas valve unit:

- **two (2) gas flanges are required; they may be threaded or flanged depending on size**
- **first step: install the flanges to prevent entry of foreign bodies in the gas line**
- **on the gas pipe, clean the already assembled parts and then install the valve unit**
- **check gas flow direction: it must follow the arrow on the valve body**
- **VGD20: make sure the O-rings are correctly positioned between the flanges and the valve**
- **VGD40 and MBE: make sure the gaskets are correctly positioned between the flange**
- **fasten all the components with screws, according to the following diagrams**
- **make sure bolts on the flanges are properly tightened**

WARNING: before executing the connections to the gas pipe network, be sure that the manual cutoff valves are closed.

ATTENTION: it is recommended to mount filter and gas valves to avoid that extraneous material drops inside the valves, during maintenance and cleaning operation of the filters (both the filters outside the valves group and the ones built-in the gas valves).

ATTENTION: once the gas train is mounted, the gas proving test must be performed, according to the procedure set by laws in force.

To mount the gas train, proceed as follows:

-

1 In case of threaded joints: use proper seals according to the gas used- in case of flanged joints: place a gasket between the elements

2 Fasten all the items by means of screws, according to the diagrams showed, observing the mounting direction for each item

NOTE: the bellows unit, the manual cutoff valve and the gaskets are not part of the standard supply

MultiBloc MBE

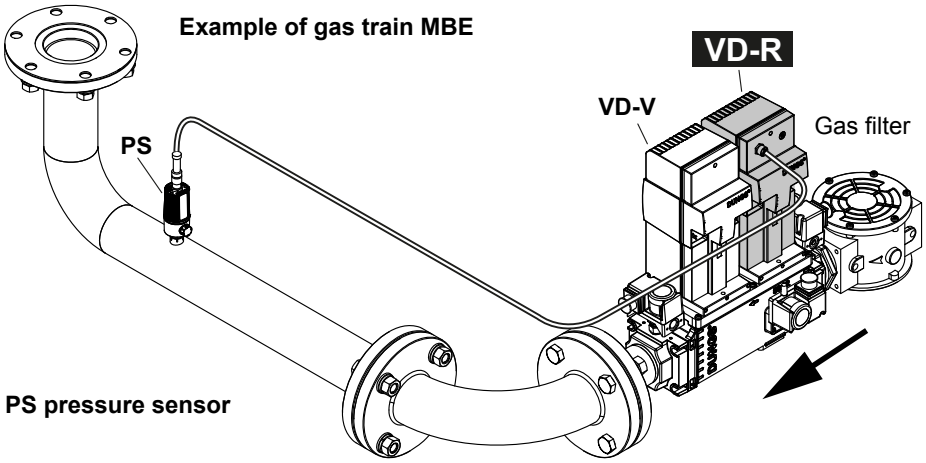

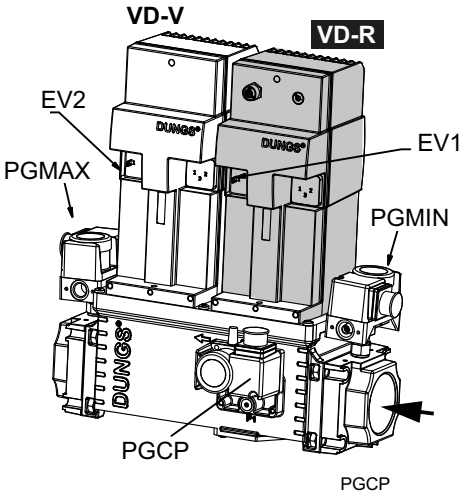

ATTENTION: once the gas train is mounted according, the gas proving test mus be performed, according to the procedure set by the laws in force.

ATTENTION: it is recommended to mount filter and gas valves to avoid that extraneous material drops inside the valves, during maintenance and cleaning operation of the filters (both the filters outside the valves group and the ones built-in the gas valves).

WARNING: Slowly open the fuel cock to avoid breaking the pressure regulator.

Threaded train with MultiBloc MBE - Mounting

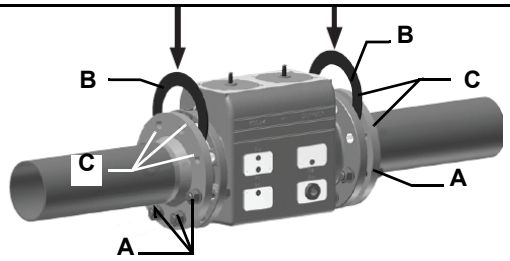

1. Insert studs A.
2. Insert seals B.
3. Insert studs C.
4. Tighten studs in accordance with section 8.

Ensure correct position of the seal!

5. Perform leak and functional tests after mounting.
6. Screws (4xM5x20) for VD assembly are supplied.

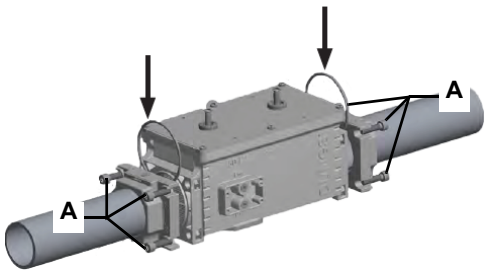

1. Mount flange into pipe systems. Use appropriate sealing agent.
2. Insert VB together with supplied O-rings.
Check current position of O-rings.
3. Tighten supplied screws (8xM8x30) in accordance with section 8.
4. Screws (4xM5x25) for VD assembly are supplied.
5. After installation, perform leakage and functional test.
6. Disassembly in reverse order.

Mounting position MBE / VB / VD

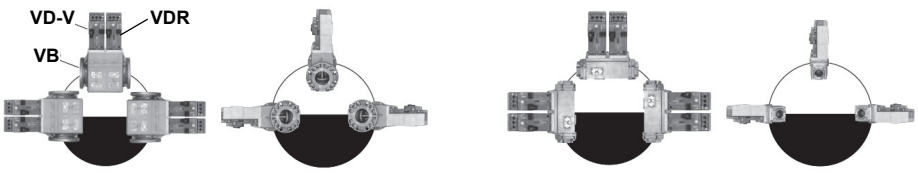

Mounting VD-R & PS-...

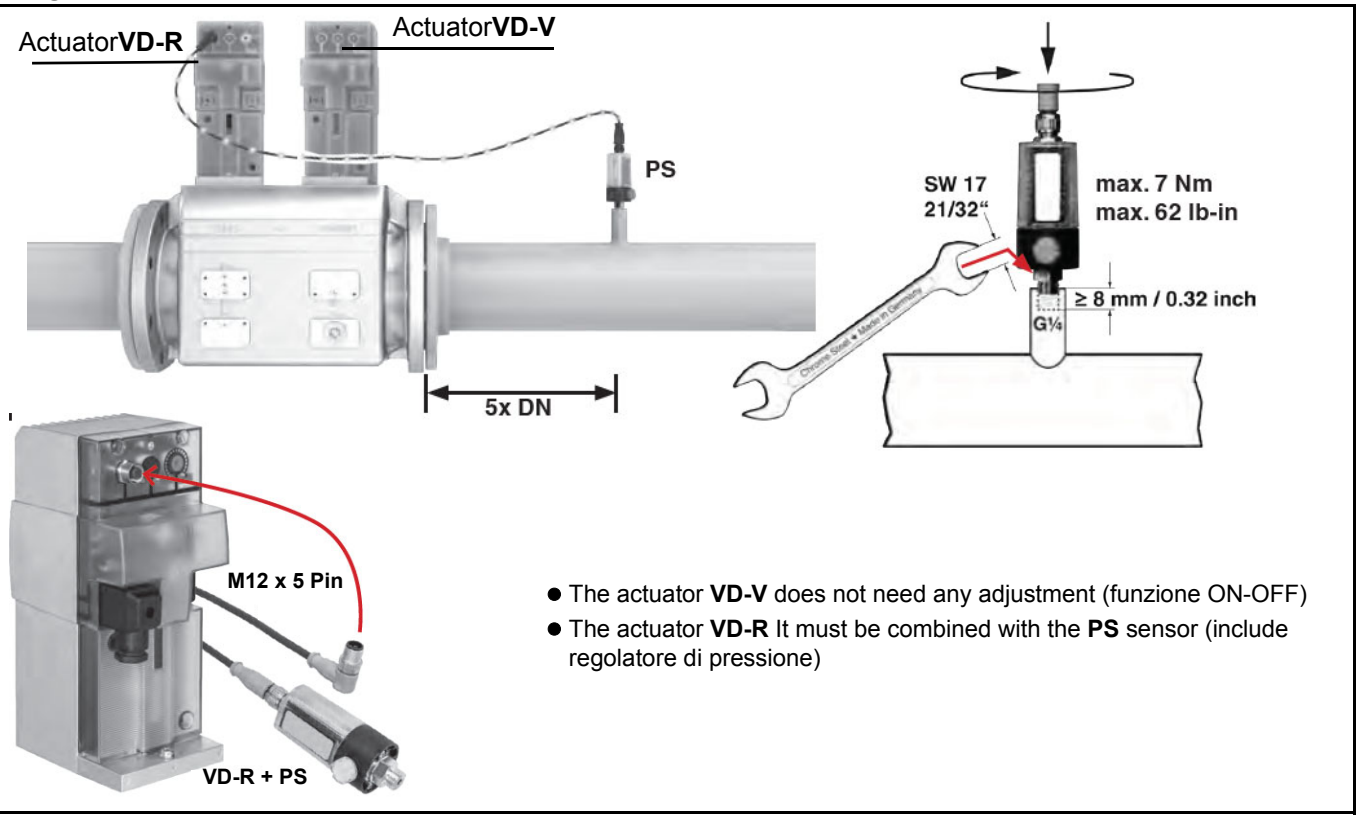

- The actuator **VD-V** does not need any adjustment (funzione ON-OFF)
- The actuator **VD-R** It must be combined with the **PS** sensor (include regolatore di pressione)

1. Gas pressure regulation is possible with VD-R and PS pressure sensor only.
WARNING! For US/CN installation, the output pressure must be monitoried by min. and max. pressure switches set to +/- 20% of the setpoint.
2. Mounting on pipe. Sensor position: 5x DN according to MBE. Pipe fitting with female thread size ¼, mount sensor with seal, observe torque.
3. The pressure sensor includes a vent limiter according to UL 353 and ANSI Z21.18/CSA 6.3. No venting required in locations where vent limiters are accepted by the jurisdiction.
4. Only PS pressure sensors specified by DUNGS are authorised to be connected to the VD-R‘s M12 interface.
5. Only PS cables specified by DUNGS are authorised to be used to connect the PS to the VD-R. Max. cable length 3 m.

ATTENTION: once the gas train is mounted according to the diagram on Fig. 4, the gas proving test mus be performed, according to the procedure set by the laws in force.

Siemens VGD20.. e VGD40..

Siemens VGD20.. and VGD40.. gas valves - with SKP2.. (pressure governor)

- Connect the reference gas pipe (**TP** in figure; 8mm-external size pipe supplied loose), to the gas pressure nipples placed on the gas pipe, downstream the gas valves: gas pressure must be measured at a distance that must be at least 5 times the pipe size.
- Leave the blowhole free (**SA** in figure). Should the spring fitted not permit satisfactory regulation, ask one of our service centres for a suitable replacement.

Caution: the SKP2 diaphragm D must be vertical

WARNING: removing the four screws BS causes the device to be unserviceable!

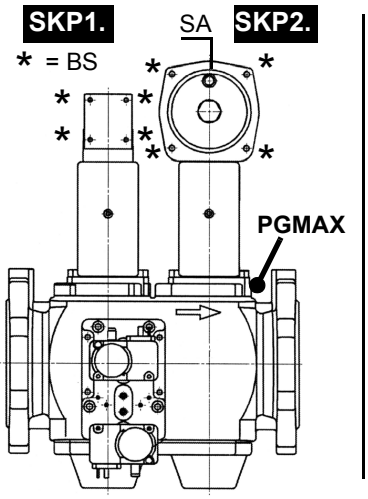

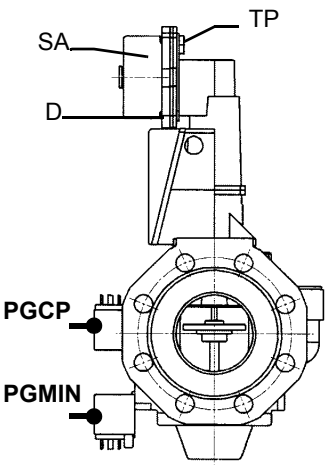

SIEMENS VGD..
Mounting positions

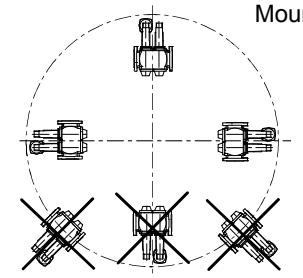

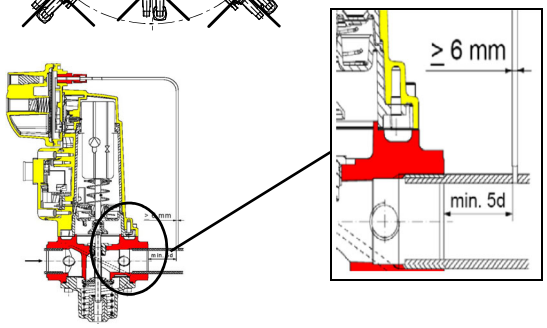

Siemens VGD... con SKPx Example of gas train

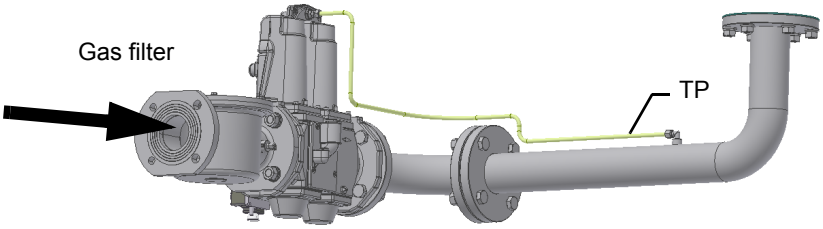

version with SKP2 (built-in pressure stabilizer)

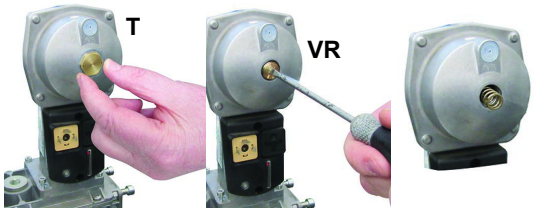

Performance range (mbar)			
	neutral	**yellow**	**red**
Spring colour SKP 25.0	0 ÷ 22	15 ÷ 120	100 ÷ 250
Spring colour SKP 25.4		7 ÷ 700	150 ÷ 1500

Siemens VGD valves with SKP actuator:

The pressure adjusting range, upstream the gas valves group, changes according to the spring provided with the valve group.

To replace the spring supplied with the valve group, proceed as follows:

- Remove the cap (T)
- Unscrew the adjusting screw (VR) with a screwdriver
- Replace the spring

Stick the adhesive label for spring identification on the type plate.

Siemens VGD SKPx5 (Auxiliary-optional micro switch)

Actuator connection

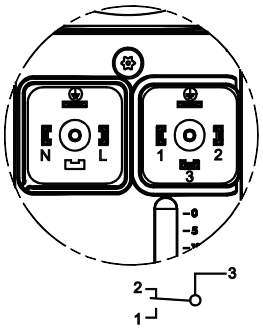

Valve drive
Plug connection

End of stroke
Plug connection

(only with SKPxx.xx1xx)

A Valve closed

Gas valveGas Filter (if provided)

The gas filters remove the dust particles that are present in the gas, and prevent the elements at risk (e.g.: burner valves, counters and regulators) from becoming rapidly blocked. The filter is normally installed upstream from all the control and on-off devices.

ATTENTION: it is reccomended to install the filter with gas flow parallel to the floor in order to prevent dust fall on the safety valve during maintenance operation.

Once the train is installed, connect the gas valves group and pressure switches plugs.

The procedures of installation fo the gas valves are showed in the next paragraphs, according to the gas train used:

- threaded gas trains with Multibloc Dungs MBC..SE 1200 or Siemens VGD20..
- flanged gas trains with Multibloc Dungs MBC..SE 1900-3100-5000 or Siemens VGD40..

Once the train is installed, connect electrically all its elements: gas valves group, pressure switches, gas proving system.

ELECTRICAL CONNECTIONS

WARNING! Respect the basic safety rules. make sure of the connection to the earthing system. do not reverse the phase and neutral connections. fit a differential thermal magnet switch adequate for connection to the mains.

WARNING! before executing the electrical connections, pay attention to turn the plant's switch to OFF and be sure that the burner's main switch is in 0 position (OFF) too. Read carefully the chapter "WARNINGS", and the "Electrical connections" section.

ATTENTION: Connecting electrical supply wires to the burner teminal block MA, be sure that the ground wire is longer than phase and neutral ones.

To execute the electrical connections, proceed as follows:

1 remove the cover from the electrical board, unscrewing the fixing screws;
2 execute the electrical connections to the supply terminal board as shown in the attached wiring diagrams;
3 check the direction of the fan motor (see next paragraph);
1 refit the panel cover.

WARNING: (only for double stage and progressive burners) The burner is provided with an electrical bridge between terminals 6 and 7; when connecting the high/low flame thermostat, remove this bridge before connecting the thermostat.

Rotation of electric motor

Once the electrical connection of the burner is executed, remember to check the rotation of the electric motor. The motor should rotate according to the "arrow" symbol on the body. In the event of wrong rotation, reverse the three-phase supply and check again the rotation of the motor.

CAUTION: check the motor thermal cut-out adjustment

NOTE: the burners are supplied for three-phase 380/400/415/480 V supply, and in the case of three-phase 220/230/240 V supply it is necessary to modify the electrical connections into the terminal box of the electric motor and replace the overload tripped relay.

Note on electrical supply

In the case where the power supply of the AUXILIARIES of the phase-phase burner (without a neutral), for the flame detection it is necessary to connect the RC circuit Siemens between the terminal 2 (terminal X3-04-4 in case of LMV2x, LMV3x, LMV5x, LME7x) of the base and the earth terminal, RC466890660. For LMV5 control box, please refer to the clabeling recommendations avaible on the Siemens CD attached to the burner

Key

C - Capacitor (22 nF , 250 V)
LME / LMV - Siemens control box
R - Resistor (1 MΩ)
M: Terminal 2 (LGB, LME), Terminal X3-04-4 (LMV2x, LMV3x, LMV5, LME7x)
RC466890660 - RC Siemens filter

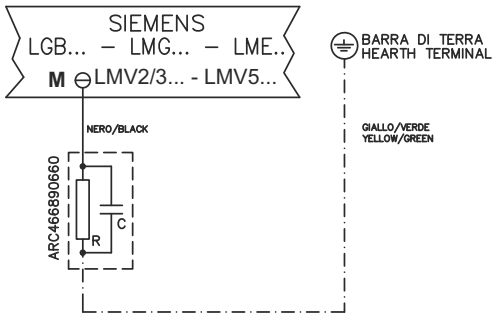

Combustion head gas pressure curves depending on the flow rate

Curves are referred to pressure = 0mbar in the combustion head!

The curves referred to the gas pressure in the combustion head, depending on the gas flow rate, are referred to the burner properly adjusted (percentage of residual O_2 in the flues as shown in the "Recommended combustion values" table and CO in the standard limits). During this stage, the combustion head, the gas butterfly valve and the actuator are at the maximum opening. Refer to Fig. 3, showing the correct way to measure the gas pressure, considering the values of pressure in combustion chamber, surveyed by means

of the pressure gauge or taken from the boiler's Technical specifications.

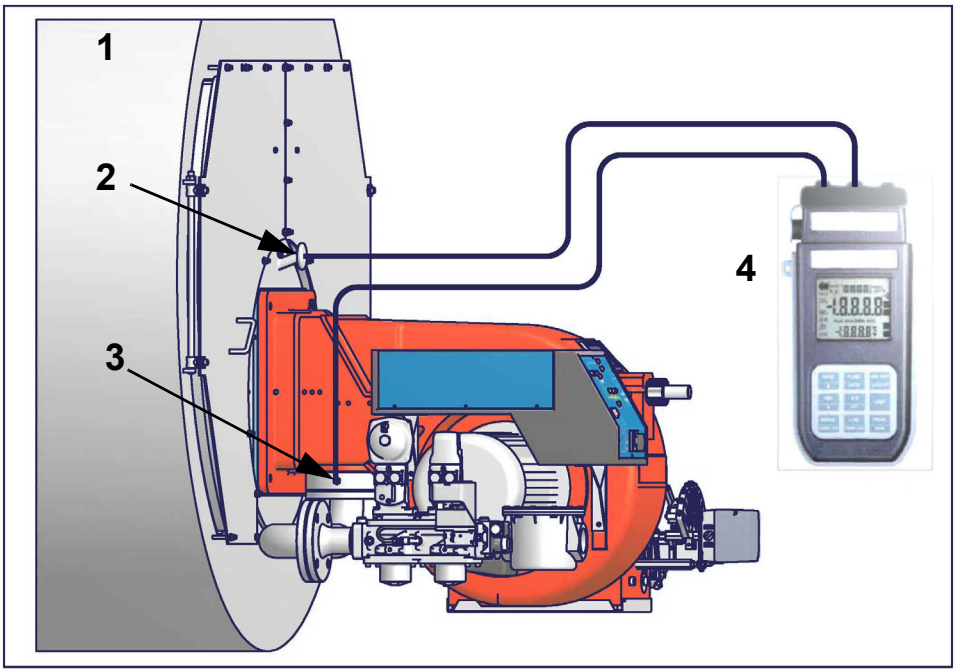

Fig. 3

Key

1 Generator
2 Pressure outlet on the combustion chamber
3 Gas pressure outlet on the butterfly valve
4 Differential pressure gauge

Measuring the gas pressure in the combustion head

In order to measure the pressure in the combustion head, insert the pressure gauge probes: one into the combustion chamber's pressure outlet to get the pressure in the combustion chamber and the other one into the butterfly valve's pressure outlet of the burner. On the basis of the measured differential pressure, it is possible to get the maximum flow rate: in the pressure - rate curves (showed on the next paragraph), it is easy to find out the burner's output in Stm^3/h (quoted on the x axis) from the pressure measured in the combustion head (quoted on the y axis). The data obtained must be considered when adjusting the gas flow rate.

NOTE: THE PRESSURE-RATE CURVES ARE GIVEN AS INFORMATION ONLY; FOR A PROPER SETTING OF THE GAS RATE, PLEASE REFER TO THE GAS METER READING.

Pressure - rate in combustion head curves (natural gas)

Curves are referred to pressure = 0 mbar in the combustion chamber!

TP90A

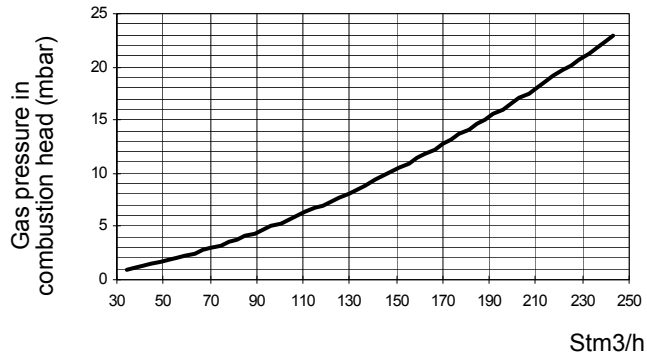

TP91A

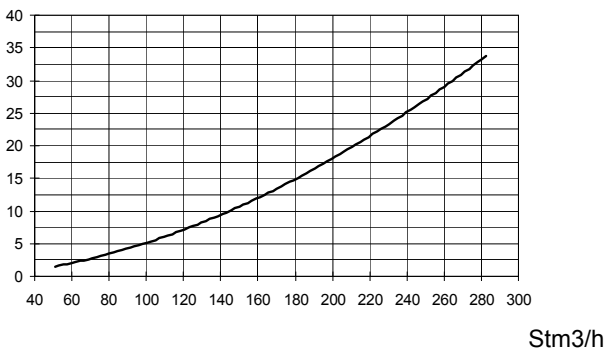

TP92A

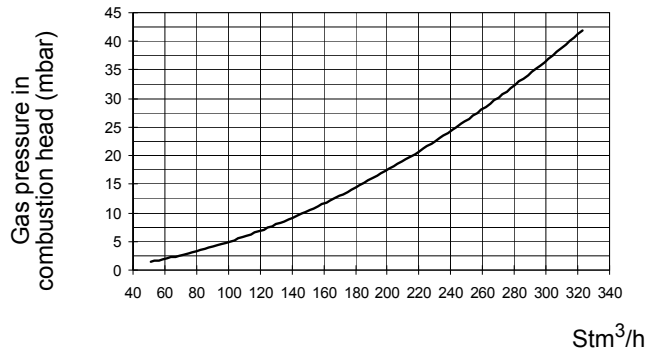

TP93A

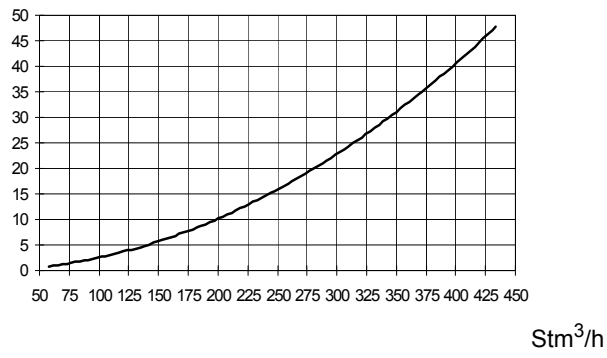

TP512A

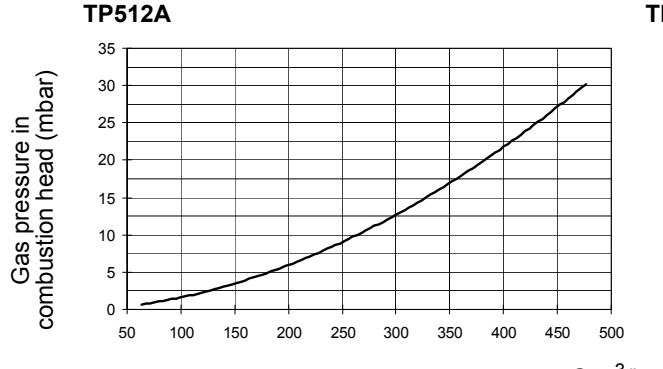

TP515A

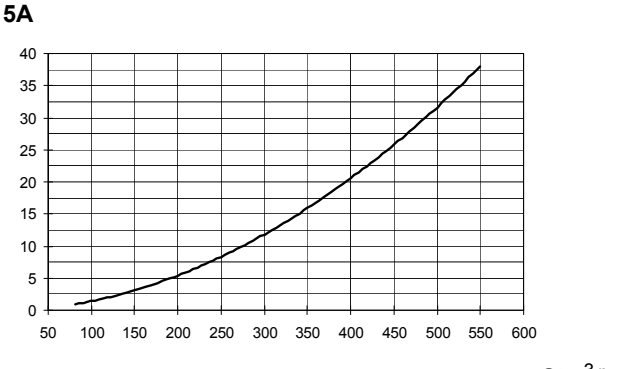

TP520A

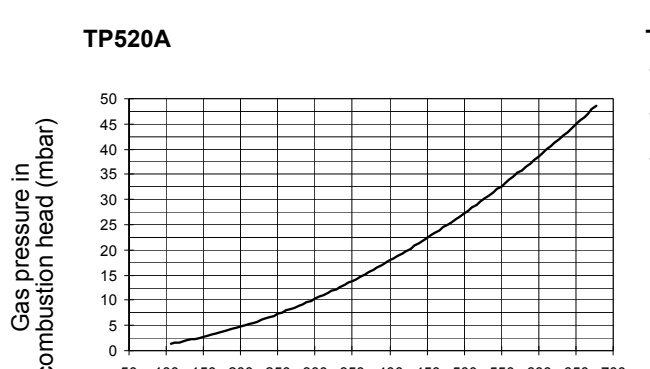

TP525A

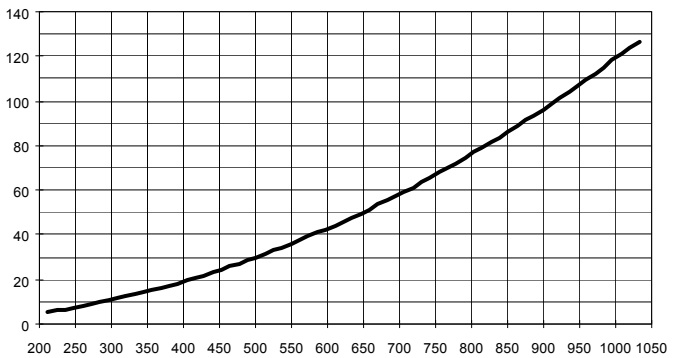

ADJUSTING AIR AND GAS FLOW RATES

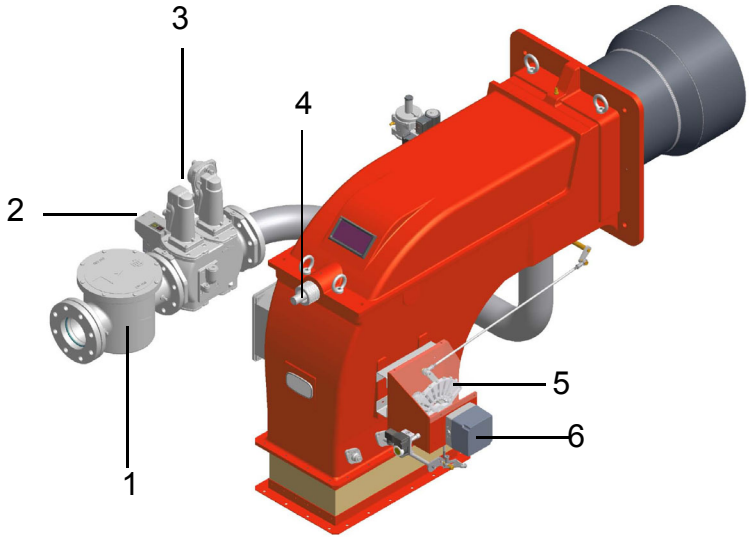

Fig. 4

Keys

1 Gas filter
2 Gas proving system
3 Gas valves
4 Combustion head adjusting screw
5 Adjusting cam
6 Actuatori

Gas Filter

The gas filters remove the dust particles that are present in the gas, and prevent the elements at risk (e.g.: burners, counters and regulators) from becoming rapidly blocked. The filter is normally installed upstream from all the control and on-off devices.

Integrated proving system (burners equipped with LME7x, LMV, LDU)

This paragraph describes the integrated proving system operation sequence:

- At the beginning both the valves (EV1 and EV2) must be closed.
- Test space evacuating: EV2 valve (burner side) opens and keep this position for a preset time (td4), in order the bring the test space to ambient pressure.Test atmospheric pressure: EV2 closes and keep this position for a preset time (test time td1). The pressure switch PGCP has not to detect a rise of pressure.
- Test space filling: EV1 opens and keep this position for a preset time (td3), in order to fill the test space.
- Test gas pressure: EV1 closes and keep this position for a preset time (td2). The pressure switch PGCP has not to detect a pressure drop down.

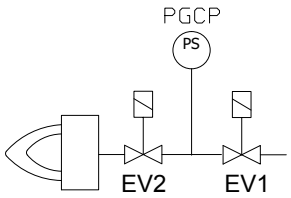

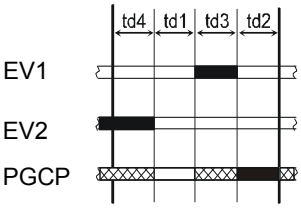

If all of the test phases are passed the proving system test is successful, if not a burner lockout happens.

On LMV5x and LMV2x/3x and LME73 (except LME73.831BC), the valve proving can be parameterized to take place on startup, shutdown, or both. On LME73.831BC the valve proving is parameterized to take place on startup only.

Adjusting air and gas flow rates

	ATTENTION: **before starting the burner up, be sure that the manual cutoff valves are open and check that the pressure upstream the gas train complies the value quoted on paragraph "Technical specifications". Be sure that the mains switch is closed.**
	ATTENTION: During commissioning operations, do not let the burner operate with insufficient air flow (danger of formation of carbon monoxide); if this should happen, make the fuel decrease slowly until the normal combustion values are achieved.
	WARNING: NEVER LOOSE THE SEALED SCREWS! OTHERWISE, THE DEVICE WARRANTY WILL BE INVALIDATE!

	IMPORTANT! the combustion air excess must be adjusted according to the in the following chart:

Recommended combustion parameters		
Fuel	Recommended (%) CO_2	Recommended (%) O_2
Natural gas	9 ÷ 10	3 ÷ 4.8
LPG	11 ÷ 12	2.8 ÷ 4.3

.During the factory test, the gas butterfly valve, air damper in low flame and actuator are set to average values.

Adjustments - brief description

- Adjust the air and gas flow rates at the maximum output ("high flame") first, by means of the air damper and the valves group pressure stabiliser respectively.
- Check that the combustion parameters are in the suggested limits.
- Check the flow rate measuring it on the counter or, if it was not possible, verifying the combustion head pressure by means of a differential pressure gauge, as described on par. "Measuring the gas pressure in the combustion head".
- Then, adjust the combustion values corresponding to the points between maximum and minimum (progressive -fully modulating burners only): set the shape of the adjusting cam foil. The adjusting cam sets the air/gas ratio in those points, regulating the opening-closing of the air damper.
- Set, now, the low flame output, acting on the low flame microswitch of the actuator in order to avoid the low flame output increasing too much or that the flues temperature gets too low to cause condensation in the chimney.

To change the burner setting during the testing in the plant, follows the next procedure, according to the model provided.

Adjusting procedure

The burner is factory-set wih the adjusting plate holes fully open, and the combustion head at its MAX position, so it is fit to work at the maximum output.
To adjust the gas flow, partially close the holes, as follows:

⚠	CAUTION: perform the adjustments once the buner is turned off and cooled.

1 loosen the three **V** screws that fix the adjusting plate **D**;
2 insert a screwdriver on the adjusting plate notches and let it move CW/CCW as to open/close the holes;
3 once the adjustmet is performed, fasten the **V** screws.

- **TP91A - TP92A - TP93A**

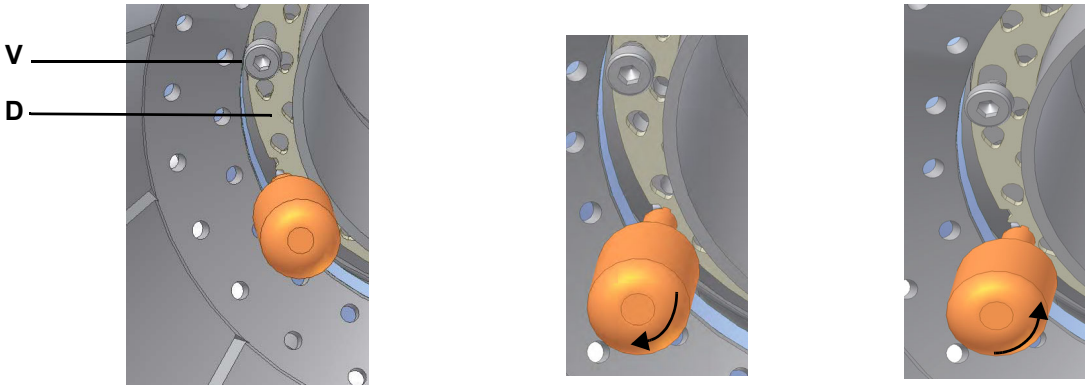

- **TP512A - TP515A - TP520A - TP525A**

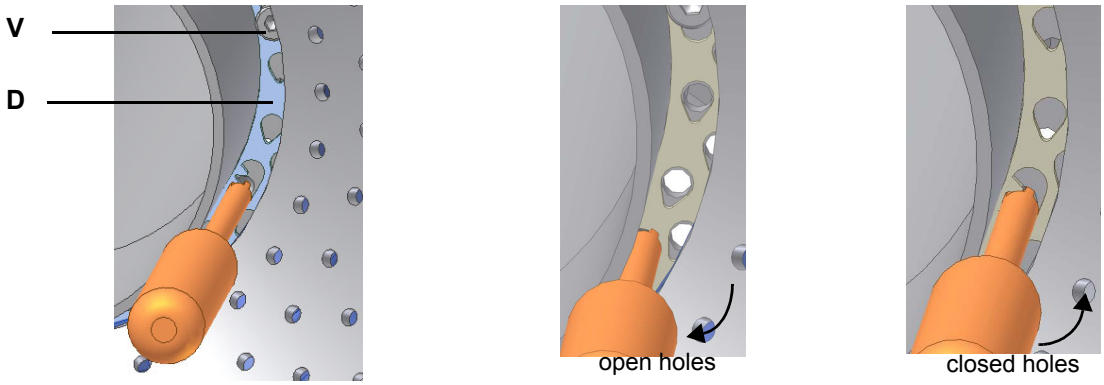

To let the burner operate at a lower output, loose the **VB** screw and move progressively back the combustion head towards the MIN position, by turning clockwise the **VRT** ring nut. Fasten **VB** screw when the adjustment is accomplished.

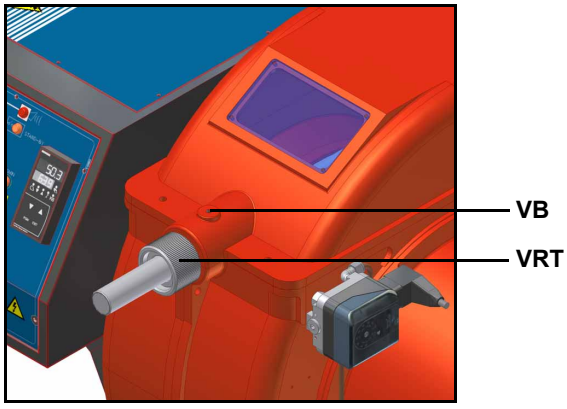

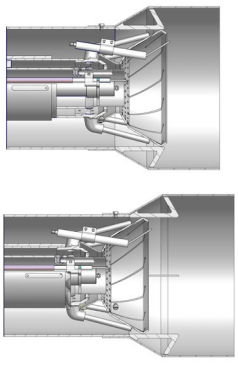

Attention! Change the combustion head position only if necessary. If so, repeat the air and gas adjustments described above.
Now, adjust the burner according to the actuator model provided.

MultiBloc MBE *Regulation VD-R whith PS*

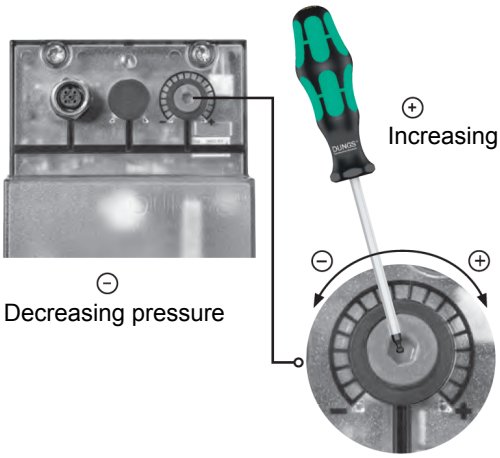

Setting scale is „Not“ linear! Various sensors available. Output pressure according to sensor‘s measuring range.

Adjust the outlet pressure to the value specified by the burner or equipment manufacturer!

While making outlet pressure adjustments, do not exceed a value that creates a hazardous condition to the burner!

Fig. 5

ATTENTION: To set the outlet pressure of the VD-R regulator, act on the adjustment ring nut (Fig. 10)
The position of the indicator in the dial indicates the value of the outlet pressure calculated as a percentage of the full scale of the PS sensor (Fig. 11)

Outlet pressure	MIN	10%	25%	50%	75%	MAX
PS-10/40	4 mbar 0,4 kPa 2 "w.c.	10 mbar 1,0 kPa 4 "w.c.	25 mbar 2,5 kPa 10 "w.c.	50 mbar 5,0 kPa 20 "w.c.	75 mbar 7,5 kPa 30 "w.c.	100 mbar 10,0 kPa 40 "w.c.
PS-50/200	20 mbar 2,0 kPa 8 "w.c.	50 mbar 5,0 kPa 20 "w.c.	125 mbar 12,5 kPa 50 "w.c.	250 mbar 25,0 kPa 100 "w.c.	375 mbar 37,5 kPa 150 "w.c.	500 mbar 50,0 kPa 200 "w.c.

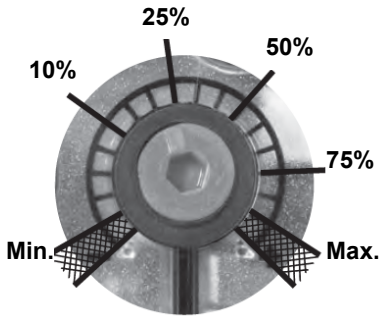

Fig. 6

Adjusting output pressure for positive pressure systems (requires PS-10/40 or PS-50/200):

Pressure taps MultiBloc MBE

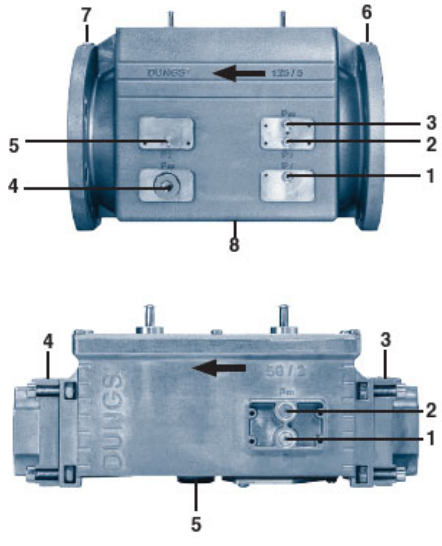

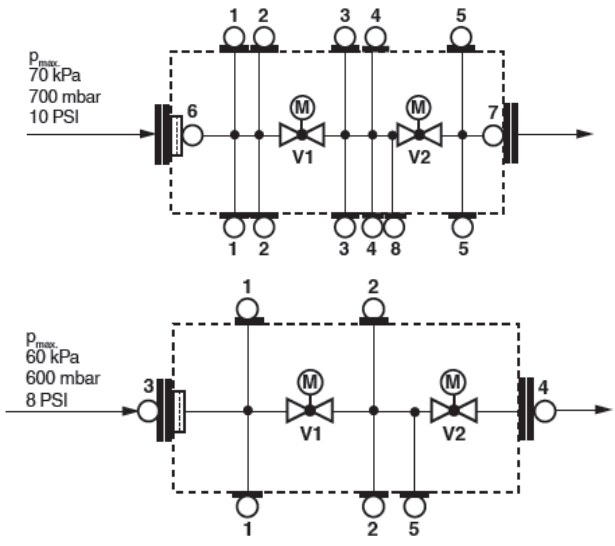

1, 2, 3, 5
Sealing plug

G ⅛ ISO 228
4
For system accessories

G ¾

Fig. 7

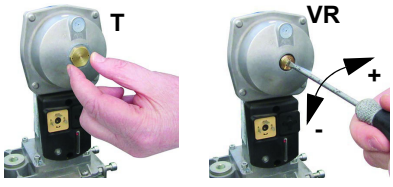

Gas valve Siemens VGD - Version with SKP2. (Built-in pressure stabilizer)

To increase or decrease gas pressure, and therefore gas flow rate, remove the cap **T** and use a screwdriver to adjust the regulating screw **VR**. Turn clockwise to increase the flow rate, counterclockwise to reduce it.

Settings by means of Berger Siemens SQM40.. actuator

1 startup the burner by turning its main switch to on: if the burner locks press the RESET button on the burner control panel - see-chpater “OPERATION”.

SQM40.265 Actuator cams

(RD) I	High flame
(BU) II	Stand-by
(OG) III	Low flame
(YE) IV	-
(BK) V	-
(GN) VI	Ignition

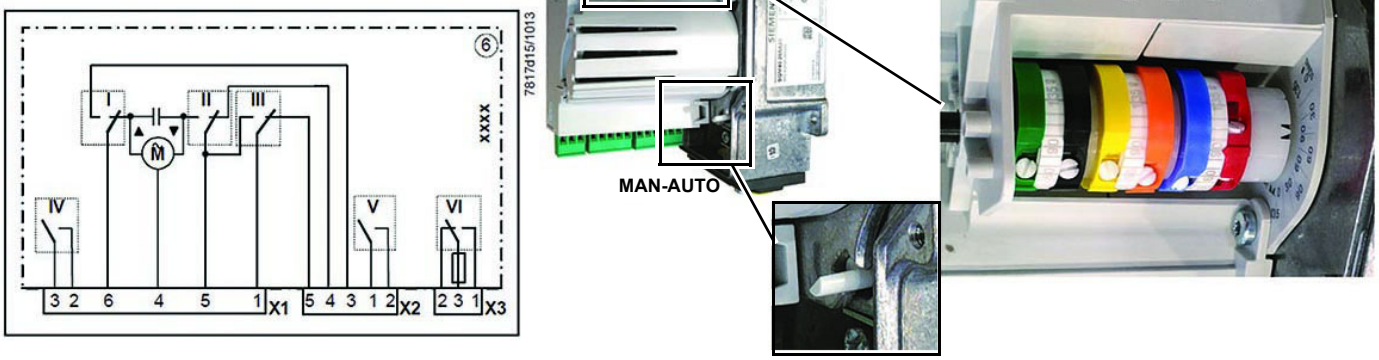

2

3 check the fan motor rotation (see page 22)..

4 Before starting the burner up, drive the high flame actuator microswitch matching the low flame one (in order to let the burner operates at the lowest output)to safely achieve the high flame stage.

5 Start the burner up by means of the thermostat series and wait until the pre-purge time comes to an end and that the burner starts up;

6 drive the burner to high flame stage, by means of the high/low flame thermostat **TAB** (see Wiring diagrams); as far as fully-modulating burners, see relateda paragraph.

7 Then move progressively the high flame actuator microswitch to higher values until it reaches the high flame position; always check the combustion values and eventually adjusting the gas by means of the valves group governor and the air by means of the related adjusting cam (see next steps).

8 Go on adjusting air and gas flow rates: check, continuosly, the flue gas analisys, as to avoid combustion with little air; adjust the air according to the gas flow rate change following the steps quoted below;

9 acting on the pressure stabiliser of the valves group, adjust the **gas flow rate in the high flame stage** as to meet the values requested by the boiler/utilisation:

- Siemens VGD valves group: remove cap **T** and act on the **VR** adjusting screw to increase or decrease the pressure and consequently the gas rate; screwind **VR** the rate increases, unscrewing it decreases (see next figure).

- Dungs MBC..SE valves group: act on its pressure governor to increase or decrease the pressure and consequently the gas rate.

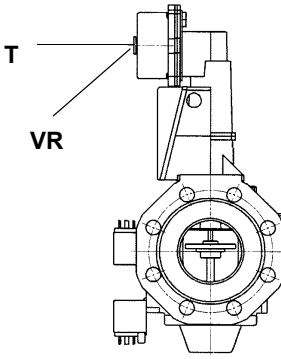

:

Siemens VGD..

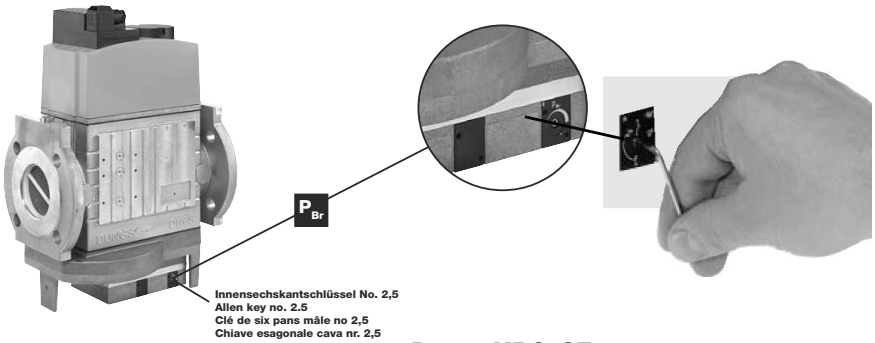

Dungs MBC..SE

10 To adjust the **air flow rate in the high flame stage**, loose the **RA** nut and screw **VRA** as to get the desired air flow rate: moving the rod **TR** towards the air damper shaft, the air damper opens and consequently the air flow rate increases, moving it far from the shaft the air damper closes and the air flow rate decreases.

Note: once the procedure is perfomed, be sure that the blocking nut **RA** is fasten. Do not change the position of the air damper

rods.

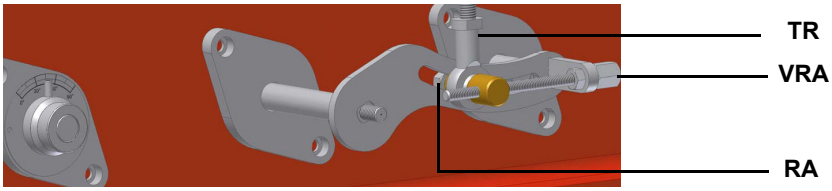

11 the air and gas rate are now adjusted at the maximum power stage, go on with the point to point adjustement on the **SV** adjusting cam as to reach the minimum output point.

12 as for the point-to-point regulation, move the gas low flame microswitch (cam III) a little lower than the maximum position (90°);

13 Set the **TAB** thermostat to the minimum in order that the actuator moves progressively towards the low flame position;

14 move cam III to the minimum to move the actuator towards the low flame until the two bearings find the adjusting screw that refers to the lower position: screw **V** to increase the rate, unscrew to decrease.

15 Move again cam III towards the minimum to meet the next screw on the adjusting cam and repeat the previous step; go on this way as to reach the desired low flame point.

16 If it is necessary to change the burner output in the low flame stage, move cam III: the low flame position must never match the ignition position, that is why cam III must be set 20°-30° more than cam II.

17 Now adjust the pressure switches (see next par.).

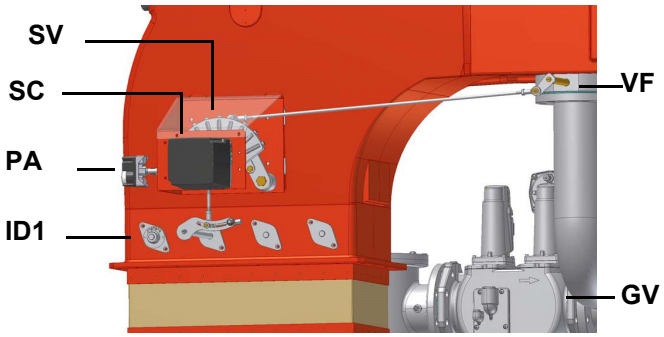

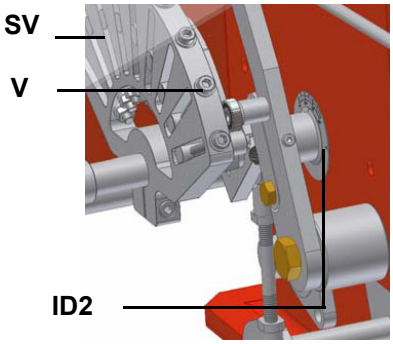

Keys
GV gas valves group
ID1 air damper indexgas valves group
ID2 index
PA air pressure switch
SC actuator
SV adjusting cam
V adjusting screws
VF butterfly valve

Fully modulating burners

To adjust the fully-modulating burners, use the **CMF** switch on the burner control panel (see next picture), instead of the **TAB** thermostat as described on the previous paragraphs about the progressive burners. Go on adjusting the burner as described before, paying attention to use the CMF switch intead of **TAB**.

The **CMF** position sets the oprating stages: to drive the burner to the high-flame stage, set CMF=1; to drive it to the low-flame stage, set CMF=2. To move the adjusting cam set CMF=1 or 2 and then CMF=0.

CMF = 0 stop at the current position
CMF = 1 high flame operation
CMF = 2 low flame operation
CMF = 3 automatic operation

Calibration of air and gas pressure switches

The **air pressure switch** locks the control box if the air pressure is not the one requested. If it happens, unlock the burner by means of the control box unlock pushbutton, placed on the burner control panel.

The **gas pressure switches** check the pressure to avoid the burner operate when the pressure value is not in the requested pressure range.

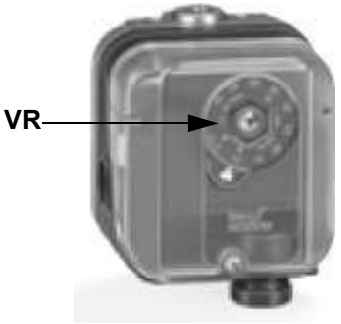

Calibration of air pressure switch

To calibrate the air pressure switch, proceed as follows:

- Remove the transparent plastic cap.
- Once air and gas setting have been accomplished, startup the burner.
- During the pre-purge phase o the operation, turn slowly the adjusting ring nut **VR** in the clockwise direction until the burner lockout, then read the value on the pressure switch scale and set it to a value reduced by 15%.
- Repeat the ignition cycle of the burner and check it runs properly.
- Refit the transparent plastic cover on the pressure switch.

Calibration of low gas pressure switch

As for the gas pressure switch calibration, proceed as follows:

- Be sure that the filter is clean.
- Remove the transparent plastic cap.
- While the burner is operating at the maximum output, test the gas pressure on the pressure port of the minimum gas pressure switch.
- Slowly close the manual cutoff valve (placed upstream the pressure switch, see gas train installation diagram), until the detected pressure is reduced by 50%. Pay attention that the CO value in the flue gas does not increase: if the CO values are higher than the limits laid down by law, slowly open the cutoff valve as to get values lower than these limits.
- Check that the burner is operating correctly.
- Clockwise turn the pressure switch adjusting ring nut (as to increase the pressure value) until the burner stops.
- Slowly fully open the manual cutoff valve.
- Refit the transparent plastic cover on the pressure switch.

Adjusting the maximum gas pressure switch (when provided)

To calibrate the maximum pressure switch, proceed as follows according to its mounting position:

1 remove the pressure switch plastic cover;

2 if the maximum pressure switch is mounted upstreaam the gas valves: measure the gas pressure in the network, when flame is off; by means of the adjusting ring nut **VR**, set the value read, increased by the 30%.

3 if the maximum pressure switch is mounted downstream the “gas governor-gas valves” group and upstream the butterfly valve: light the burner, adjust it according to the procedure in the previous paragrph. Then, measure the gas pressure at the operating flow rate, downstream the “gas governor-gas valves” group and upstream the butterfly valve; by means of the adjusting ring nut **VR**, set the value read on step 2, increased by the 30%;

4 replace the plastic cover.

PGCP Gas leakage pressure switch (witn Siemens LDU burner control/Siemens LMV Burner Management System)

- remove the pressure switch plastic cover;
- adjust the PGCP pressure switch to the same value set for the minimum gas pressure switch;
- replace the plastic cover.

PART II: OPERATION

For further information on the output controller, see the relevant manual.

LIMITATIONS OF USE

THE BURNER IS AN APPLIANCE DESIGNED AND CONSTRUCTED TO OPERATE ONLY AFTER BEING CORRECTLY CONNECTED TO A HEAT GENERATOR (E.G. BOILER, HOT AIR GENERATOR, FURNACE, ETC.), ANY OTHER USE IS TO BE CONSIDERED IMPROPER AND THEREFORE DANGEROUS.

THE USER MUST GUARANTEE THE CORRECT FITTING OF THE APPLIANCE, ENTRUSTING THE INSTALLATION OF IT TO QUALIFIED PERSONNEL AND HAVING THE FIRST COMMISSIONING OF IT CARRIED OUT BY A SERVICE CENTRE AUTHORISED BY THE COMPANY MANUFACTURING THE BURNER.

A FUNDAMENTAL FACTOR IN THIS RESPECT IS THE ELECTRICAL CONNECTION TO THE GENERATOR'S CONTROL AND SAFETY UNITS (CONTROL THERMOSTAT, SAFETY, ETC.) WHICH GUARANTEES CORRECT AND SAFE FUNCTIONING OF THE BURNER.

THEREFORE, ANY OPERATION OF THE APPLIANCE MUST BE PREVENTED WHICH DEPARTS FROM THE INSTALLATION OPERATIONS OR WHICH HAPPENS AFTER TOTAL OR PARTIAL TAMPERING WITH THESE (E.G. DISCONNECTION, EVEN PARTIAL, OF THE ELECTRICAL LEADS, OPENING THE GENERATOR DOOR, DISMANTLING OF PART OF THE BURNER).

NEVER OPEN OR DISMANTLE ANY COMPONENT OF THE MACHINE.

OPERATE ONLY THE MAIN SWITCH, WHICH THROUGH ITS EASY ACCESSIBILITY AND RAPIDITY OF OPERATION ALSO FUNCTIONS AS AN EMERGENCY SWITCH, AND ON THE RESET BUTTON.

IN CASE OF A BURNER SHUT-DOWN, RESET THE CONTROL BOX BY MEANS OF THE RESET PUSHBUTTON. IF A SECOND SHUT-DOWN TAKES PLACE, CALL THE TECHNICAL SERVICE, WITHOUT TRYING TO RESET FURTHER.

WARNING: DURING NORMAL OPERATION THE PARTS OF THE BURNER NEAREST TO THE GENERATOR (COUPLING FLANGE) CAN BECOME VERY HOT, AVOID TOUCHING THEM SO AS NOT TO GET BURNT.

OPERATION

ATTENTION: BEFORE STARTING THE BURNER UP, BE SURE THAT THE MANUAL CUTOFF VALVES ARE OPEN AND CHECK THAT THE PRESSURE VALUE UPSTREAM THE GAS TRAIN MATCHES THE VALUE ON PARAGRAPH "TECHNICAL SPECIFICATIONS"). CHECK THAT THE MAINS SWITCH IS CLOSED. CAREF

- Turn to the "ON" position the main switch on the burner control panel.
- Check the control box is not locked and eventually release it by means of the reset pushbutton (for further information about the , please refer to the manual's Appendix).
- Check the series of thermostats or pressure switches enables the burner to operate.
- Check that the gas pressure in the gas network is sufficient.
- The check cycle of the gas proving system starts; the end of this check is signalled by the related light on the device (see page 25). To unlock the system, press the reset pushbutton on the gas proving system.
- The fan motor starts, the servocontrol drives the air damper to the maximum opening position; the pre-purge time countdown starts now.
- At the end of the pre-purgue time, the air damper moves to the ignition position (about 5°), the ignition transformer is energised, the solenoid gas valves **EV1** and **EV2** are energised.
- The flame must appear within few seconds after the gas valves opening, otherwise the control box locks out. Some seconds after the gas valves opening the ignition transformer turns off.. The burner is now on and at the same time the actuator drives itself to the high flame position (90° - see pag. 26).
- Some seconds after the gas valves opening, the burner starts the automatic operation: it works in high or low-flame operation (for progressive PR- burners) or in the phase requested by the burner modulator (Fully modulating - MD buners) according to the requirements of the plant.

PART III: MAINTENANCE

At least once a year carry out the maintenance operations listed below. In the case of seasonal servicing, it is recommended to carry out the maintenance at the end of each heating season; in the case of continuous operation the maintenance is carried out every 6 months.

WARNING: ALL OPERATIONS ON THE BURNER MUST BE CARRIED OUT WITH THE MAINS DISCONNECTED AND THE FUEL MANAUL CUTOFF VALVES CLOSED!

ATTENTION: READ CAREFULLY THE "WARNINGS" CHAPTER AT THE BEGINNIG OF THIS MANUAL.

ROUTINE MAINTENANCE

- Clean and examining the gas filter cartdrige, if necessary replace it (see next paragraphs).
- Removal, examination and cleaning of the combustion head (Fig. 8 and the following).
- Check the ignition and detection electrodes, clean and adjust if necessary (see Fig. 10). In case of doubt, check the detection current according to the schemes in Fig. 30-Fig. 31.
- Cleaning and greasing of sliding and rotating parts.

ATTENTIONwhen servicing, if it was necessary to disassemble the gas train parts, remember to execute the gas proving test, once the gas train is reassembled, according to the procedure imposed by the law in force.

Gas filter maintenance

ATTENTION: Before opening the filter, close the manual cutoff valve downstream the filter and bleed the gas; check that inside the filter there is no pressurised gas.

To clean or remove the filter, proceed as follows:

1 remove the cap unscrewing the fixing screws (A);
2 remove the filtering cartridge (B), clean it using water and soap, blow it with compressed air(or replace it, if necessary)
3 replace the cartridge in its proper position taking care to place it inbetween the guides as not to hamper the cap replacement;
4 be sure to replace the "O" ring into its place (C) and replace the cover fastening by the proper screws (A).

A

B

C

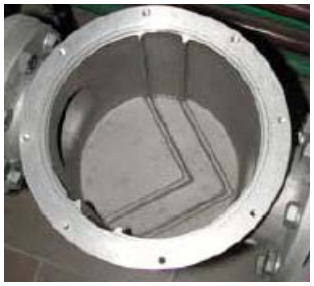

MultiBloc MBE*MultiBloc VD Mounting*

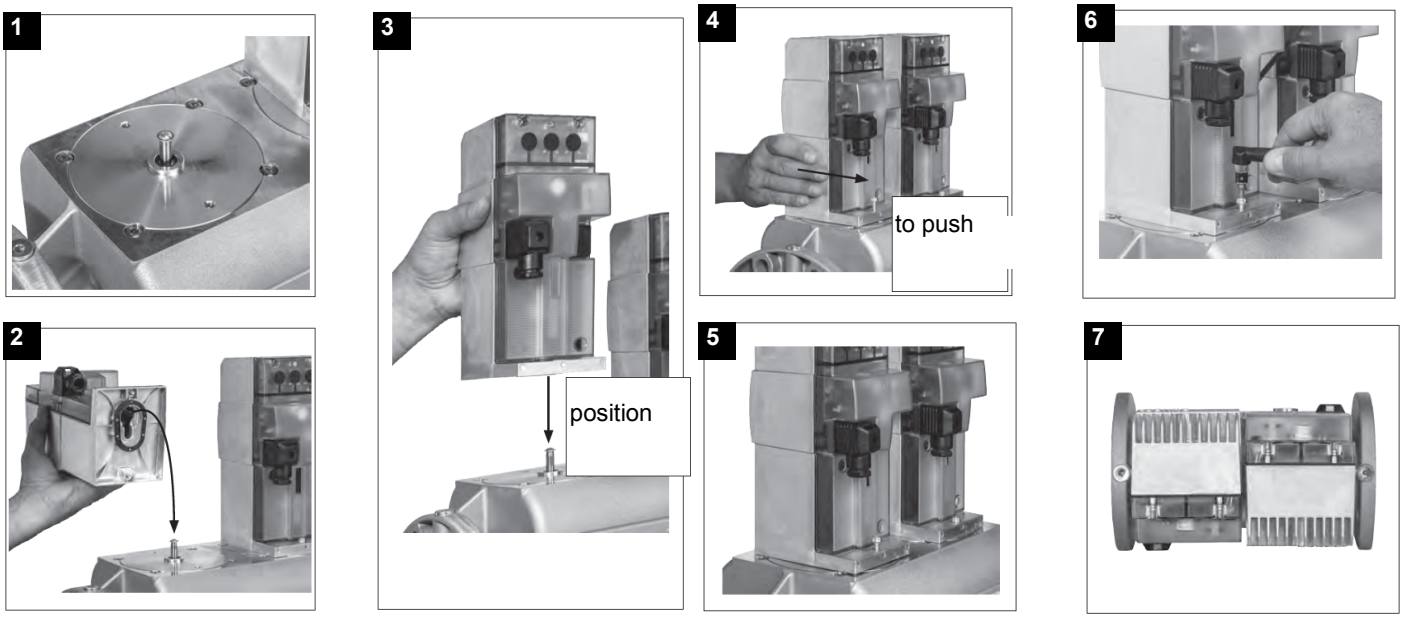

1. Position VD on VB, fig. 2+3.
2. Slide VD forward up to the stop, fig. 4.
3. Screw VD on with 2 M5 screws for each, max. 5 Nm/44 in.-lb., fig. 5/6.
4. VD can be mounted rotated by 180°, fig. 7.

Removing the combustion head

1 Remove the cover **C**.
2 remove the electrodes cables;
3 unscrew the 3 screws **V** which hold in position the gas manifold **G** and pull out the complete group as shown in figure.

Note: to replace the combustion head reverse the procedure described above having care to place correctly the O ring (**OR**) between burner and gas manifold.

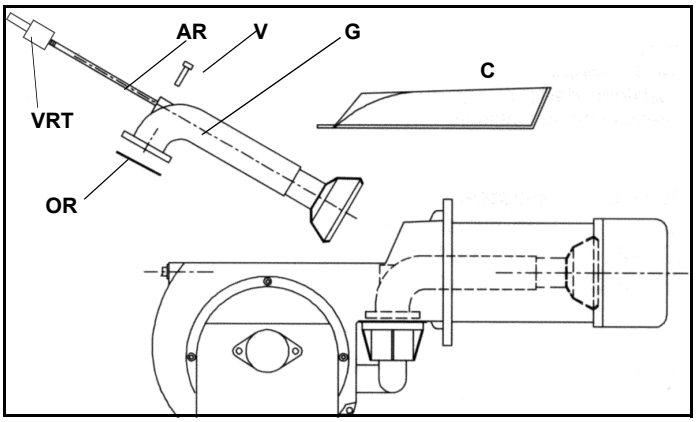

Keys

VRT	Head adjusting screw
AR	Threaded rod
V	Fixing screw
G	Gas manifold
OR	“O” ring
C	Cover

Fig. 8

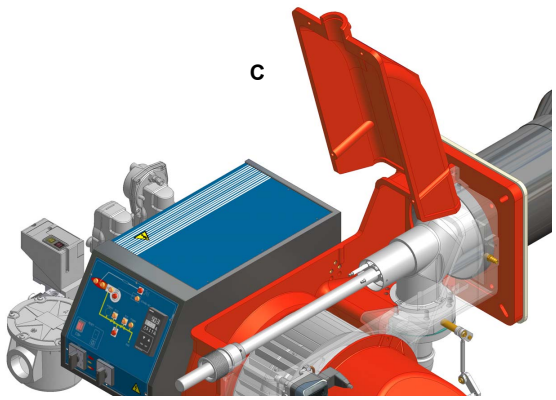

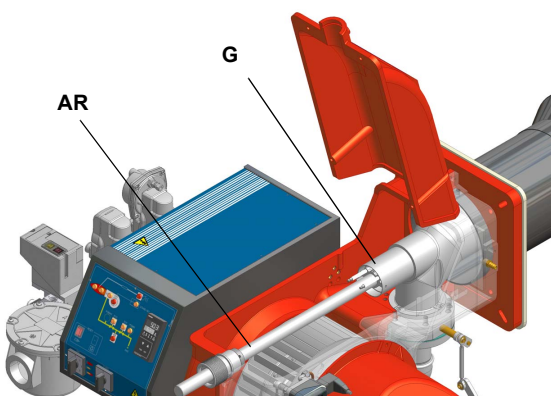

Adjusting the electrodes

Important Note: Check the ignition and detection electrodes after removing/adjusting the combustion head.

ATTENTION: avoid the ignition and detection electrodes to contact metallic parts (blast tube, head, etc.), otherwise the boiler's operation would be compromised. Check the electrodes position after any intervention on the combustion head.

The gap between the ignition electrodes must be **4mm**.

TP90A-91A-92A-93A

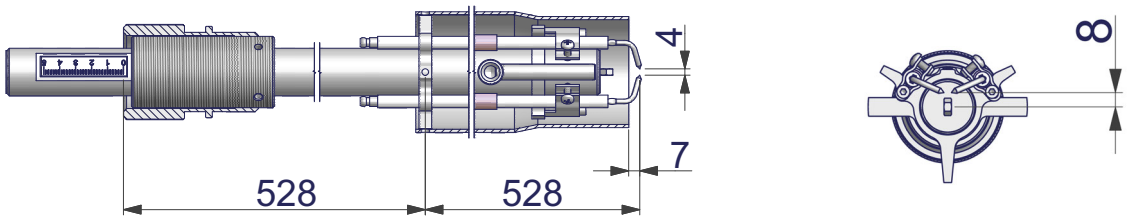

Fig. 9

TP512A-515A-520A-525A

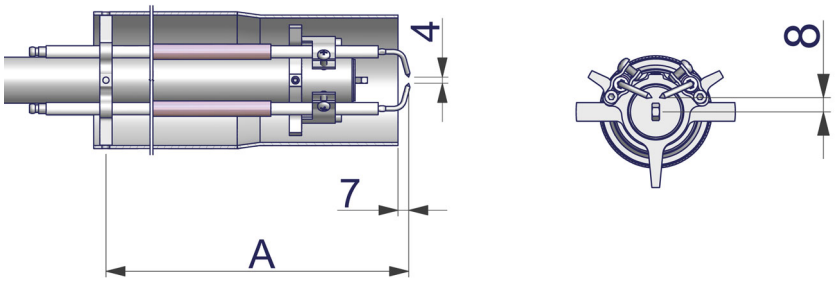

-	TP512A	TP515A	TP520A	TP525A
A	534 mm	519 mm	515 mm	515 mm

Fig. 10

Replacing the ignition electrodes

ATTENTION: avoid the ignition and detection electrodes to contact metallic parts (blast tube, head, etc.), otherwise the boiler's operation would be compromised. Check the electrodes position after any intervention on the combustion head.

To replace the ignition electrodes, proceed as follows:

1 remove the burner cover
2 loose the nuts that fasten;the electrodes group to the combustion head (A);
3 disconnect the electrodes cables (B);
4 loose the security dowes of the adjusting ring nut (C);
5 shift the electrodes group back to the outside and remove the combustion head (D),
6 loose the screw of th eignition electrodes support (E);
7 remove the electrodes and replace them paying attention to the measures shown on previous paragraph.

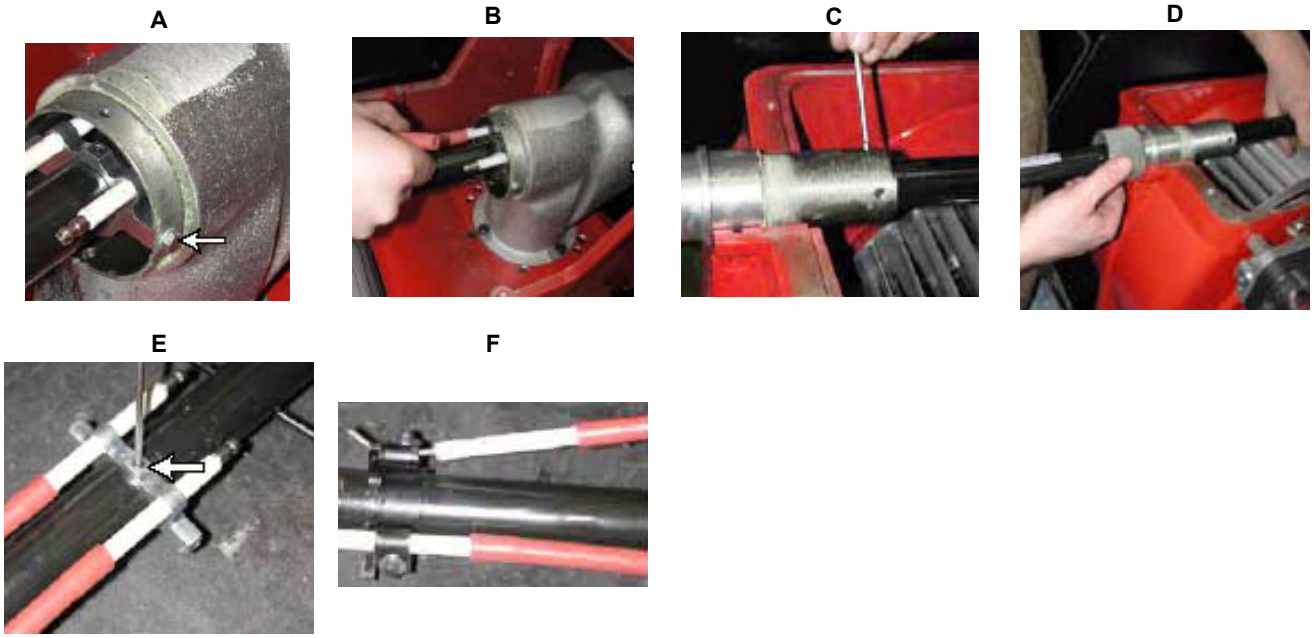

Replacing the detection electrode (natural gas burners)

To replace the detection electrode, proceed as follows:

1 remove the combustion head according to the procedure on paragraph “Removing the combustion head”;

2 by means of an allen key, loose the fixing screws of the detection electrode **ER** and replace it;

3 replace the combustion head.

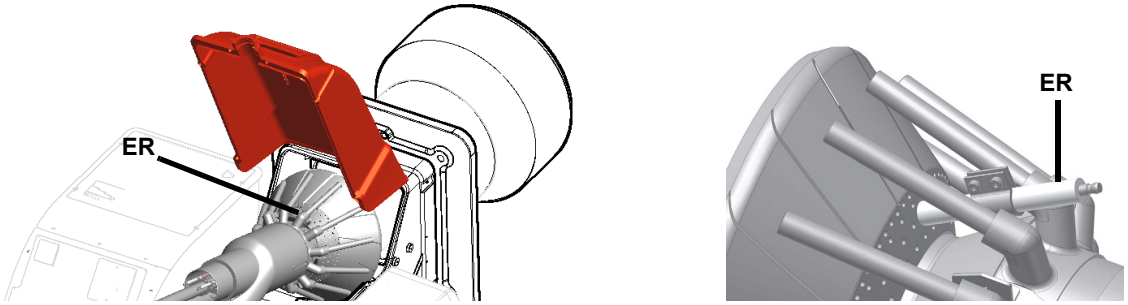

ATTENTION: avoid the electrode to get in touch with metallic parts (blast tube, head, etc.), otherwise the boiler operation would be compromised. Check the electrode position after any intervention on the combustion head.

Checking the detection current with electrode (natural gas)

To check the detection signal follow the scheme in the picture below. If the signal is less than the value indicated, check the position of the detection electrode or detector, the electrical contacts and, if necessary, replace the electrode or the detector.

Control box	Minimum detection signal
Siemens LME7..	2µA (with electrode)

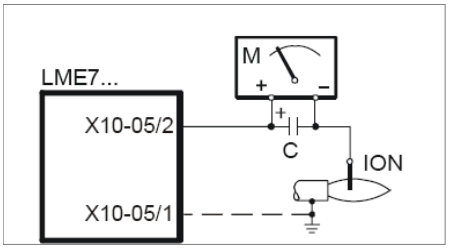

Fig. 11: Detection by electrode

)

Checking the detection current with photocell (LME) (L.P.G.)

To check the detection signal follow the scheme in the picture below. If the signal is less than the value indicated, check the position of the detection electrode or detector, the electrical contacts and, if necessary, replace the electrode or the detector.

Control box	Minimum detection signal
Siemens LME7...	70µA (with UV detector)

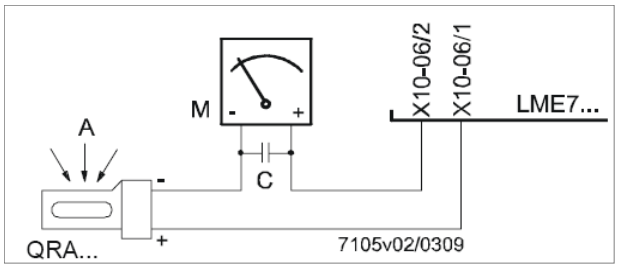

Fig. 12: Detection by photocell QRA..

Seasonal stop

To stop the burner in the seasonal stop, proceed as follows:

1 turn the burner's main switch to 0 (Off position)
2 disconnect the power mains
3 close the fuel cock of the supply line

Burner disposal

In case of disposal, follow the instructions according to the laws in force in your country about the "Disposal of materials".

WIRING DIAGRAMS

Refer to the attached wiring diagrams.

WARNING

1 - Electrical supply 230V / 400V 50Hz 3N a.c.
2 - Do not reverse phase with neutral
3 - Ensure burner is properly earthed

TROUBLESHOOTNG GUIDE Gas operation

BURNER DOESN'T LIGHT	* No electric power supply	* Restore power supply
	* Main switch open	* Close switch
	* Thermostats open	* Check set points and thermostat connections
	* Bad thermostat set point or broken thermostat	* Reset or replace the thermostat
	* No gas pressure	* Restore gas pressure
	* Safety devices (manually operated safety thermostat, pressure switches and so on) open	* Restore safety devices; wait till boiler reaches operating temperature then check safety device functionality.
	* Broken fuses	* Replace fuses. Check current absorption
	* Fan thermal contacts open (three phases motors only)	* Reset contacts and check current absorption
	* Burner control lock out	* Reset and check its functionality
	* Burner control damaged	* Replace burner control
GAS LEAKAGE: BURNER LOCKS OUT (NO FLAME)	* Gas flow is too low	* Increase the gas flow * Check gas filter cleanness * Check butterfly valve opening when burner is starting (only Hi-Low flame and progressive)
	* Ignition electrodes discharge to ground because dirty or broken	* Clean or replace electrodes
	* Bad electrodes setting	* Check electrodes position referring to instruction manual
	* Electrical ignition cables damaged	* Replace cables
	* Bad position of cables in the ignition transformer or into the electrodes	* Improve the installation
	* Ignition transformer damaged	* Replace the transformer
BURNER LOCKS OUT WITH FLAME PRESENCE	* Wrong setting of flame detector	* Adjust flame detector
	* Flame detector damaged	* Replace flame detector
	* Bad cables of flame detector	* Check cables
	* Burner control damaged	* Replace burner control
	* Phase and neutral inverted	* Adjust connections
	* Ground missing or damaged	* Check ground continuity
	* Voltage on neutral	* Take off tension on neutral
	* Too small flame (due to not much gas)	* Adjust gas flow * Check gas filter cleanness
	* Too much combustion air	* Adjust air flow rate
only FOR LME22: BURNER CONTINUES TO PERFORM ALL ITS FEATURES WITHOUT IGNITING THE BURNER	* Air pressure switch damaged or bad links	* Check air pressure switch functions and links
	* Burner control damaged	* Replace burner control
BURNER LOCKS OUT WITHOUT ANY GAS FLOW	* Gas valves don't open	* Check voltage on valves; if necessary replace valve or the burner control * Check if the gas pressure is so high that the valve cannot open
	* Gas valves completely closed	* Open valves
	* Pressure governor too closed	* Adjust the pressure governor
	* Butterfly valve closed	* Open the butterfly valve
	* Maximum pressure switch open.	* Check connection and functionality
	* Air pressure switch doesn't close the NO contact	* Check connections * Check pressure switch functionality
THE BURNER IS BLOCKED AND THE EQUIPMENT PROVIDES A LOCK CODE "CAUSE AIR PRESSURE SWITCH FAULT"	* Air pressure switch damaged (it keeps the stand-by position or badly set)	* Check air pressure switch functionality * Reset air pressure switch
	* Air pressure switch connections wrong	* Check connections
	* Air fan damaged	* Replace motor
	* No power supply	* Reset power supply
	* Air damper too closed	* Adjust air damper position
BURNER LOCKS OUT DURING NORMAL RUNNING	* Flame detector circuit interrupted	* Check wiring * Check photocell
	* Burner control damaged	* Replace burner control
	* Maximum gas pressure switch damaged or badly set	* Reset pressure switch or replace it
THE BURNER STARTS AND AFTER A WHILE IT REPEATS THE STARTING CYCLE.	* Gas pressure switch badly set	* Reset the pressure switch
	* Gas filter dirty	* Clean gas filter
	* Gas governor too low or damaged	* Reset or replace the governor
BURNER STANDS WHILE RUNNING WITHOUT ANY SWITCHING OF THERMOSTATS	* Thermal contacts of fan motor open	* Reset contacts and check values * Check current absorption
FAN MOTOR DOESN'T START	* Internal motor wiring broken	* Replace wiring or complete motor
	* Fan motor starter broken	* Replace starter
	* Fuses broken (three phases only)	* Replace fuses and check current absorption
BURNER DOESN'T SWITCH TO HIGH FLAME	* Hi-low flame thermostat badly set or damaged	* Reset or replace thermostat
	* Servomotor cam badly set	* Reset servomotor cam
***mechanical only*: SOMETIMES THE SERVOMOTOR RUNS IN THE WRONG WAY**	* Servomotor capacitor damaged	* Replace capacitor
PHASE-TO-PHASE SUPPLY OR PRESENCE OF VOLTAGE ON NEUTRAL*	* Lights up and freezes	* In such cases, insert an RC circuit (our code 2531003).

C.I.B. UNIGAS S.p.A.
Via L.Galvani, 9 - 35011 Campodarsego (PD) - ITALY
Tel. +39 049 9200944 - Fax +39 049 9200945/9201269
web site: www.cibunigas.it - e-mail: cibunigas@cibunigas.it

Note: specifications and data subject to change. Errors and omissions excepted.

LME73.000Ax + PME73.831AxBC
LME73.831AxBC

Service instruction manual

M12921CB Rel.1.2 02/2016

GENERAL FEATURES

LME/ is suitable for gas, light and heavy oil burners
LME7 series has two devices: LME73.000 (hardware) and PME73.831AxBC (programmable unit). The LME73.831AxBC is also available: it has a built in software and it isa not programmable.
LME7 is inside the control panel. If supplied, PME73.831BC is inside the LME7;
The display AZL23.. or AZL21.. is available for Service and hardware setup.

LME7… are used for the startup and supervision of 2-stage/progressive, modulating forced draft gas burners in intermittent operation.
The flame is supervised with an ionization probe, optionally with UV flame detector QRA2..., QRA4.U or QRA10....
Integrated in the LME7... basic unit are:
• Burner control
• BCI
• Control for one actuator
• Lockout reset button (info button)
• 3 multicolor signal lamp LED for operations and fault notifications
• 3 x 7-segment display for service, fault and operating state information
• Interface for program module (no function)
Passwords protect the different parameter levels against unauthorized access. Basic settings that the plant operator can make on site require no password.
Functions:
- Undervoltage detection
- Electrical remote reset facility
- Accurate control times thanks to digital signal handling
- Multicolor indication of fault status and operating state messages
- Air pressure supervision with function check of air pressure switch during start and operation (gas)
- Repetition limitation
- Controlled intermittent operation after 24 hours of continuous operation*
- BCI
- Indication of program sequence

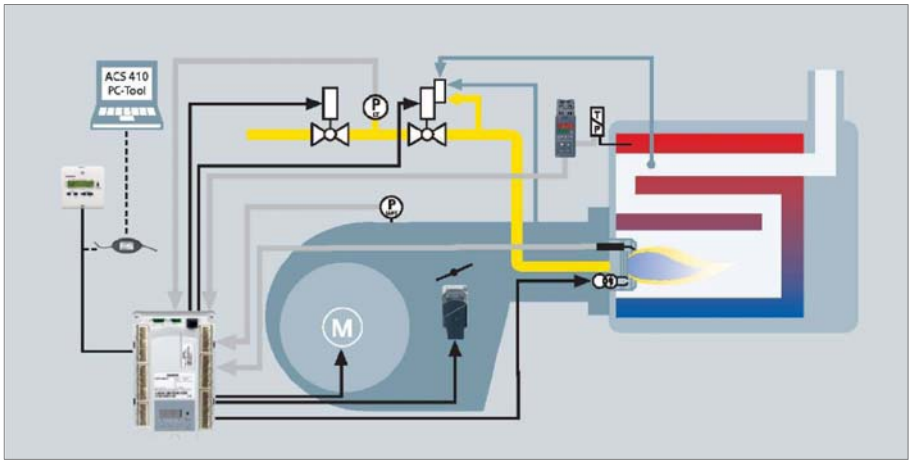

* after no more than 24 hours of continuous operation, the burner control initiates automatic controlled shutdown followed by a restart.

User interface :

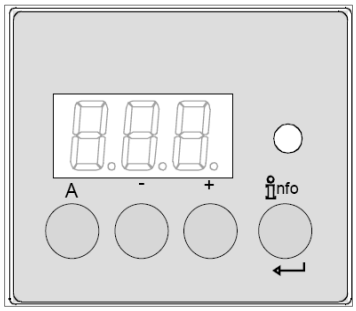

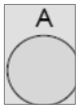	***Button A*** - Display preset output - In lockout position: Power value to the time of fault
	I***nfo and Enter button*** - Reset in the event of fault, changeover visual diagnostic of the cause of fault (refer to chapter Diagnostics of cause of fault)
	- button - Display flame signal current 2 or phases display - In lockout position: MMI phase to the time of fault
	+ button - Display flame signal current 1 or phases display - In lockout position: MMI phase to the time of fault
	3 multicolor signal lamp - Refer to chapter “Blink code table”
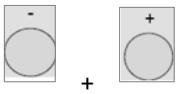	**+ and - button: Escape function** (press + and - simultaneously) - No adoption of value - One menu level up - Keep depressed for >1second for backup / restore function

First startup when PME is supplied or PME replacement:

First startup:
1) insert a new PME
2) turn the power on; The diplay shows "rst" and "PrC" one after the other.
3) keep pushing the INFO 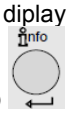 button more than 3 seconds; "run" appears; PME parameters will be transferred to LME
4) at the end, "End" and "rst" appears one after the other; Later (2'), the control box locks out "Loc 138"
5) reset the control box by pressing the INFO button (for less than 3 seconds)
Now the display shows "OFF"; the burner is ready to be started.

Replacement:
1) Turn off the burner, replace the existing PME with a new one
2) For the first startup, repeat the above procedure, from step 2.

List of phase display on board LME :

Phase number of 7-segment display	**LED**	**Function**
Standby		
OFF	Off	Standby, waiting for heat demand
P08	Off	Mains ON / test phase (e.g. detector test)
Startup		
P21	Yellow	Safety valve ON, air pressure switch test / POC test (timeout / locking
P22	Yellow	Fan motor ON / air pressure switch test / settling time
P24	Yellow	Actuator opens in prepurging position
P30	Yellow	Prepurging
P36	Yellow	Actuator closes in ignition load / low-fire position
P38	Yellow blinking	Preignition time
P40	Yellow blinking	1st safety time (TSA1) / ignition transformer ON
P42	Green	Safety time (ignition transformer OFF), flame check
P44	Green	Interval: End of safety time and fuel valve 1 (V1) ON Interval: End of safety time and load controller (LR) release
P50 Green	P50 Green	2nd safety time (TSA2)
P54 Green	P54 Green	P259.01: Actuator opens in > low-fire
P54 Green	P54 Green	P260: Actuator closes in low-fire
oP1 Green	oP1 Green	Interval until release of load controller target (analog or 3-position step input)
Operation		
oP	Green	Operation, modulating operation
Shutdown		
P10	Yellow	Shutdown, actuator opens in CLOSE position (home run)
P72	Yellow	Actuator opens in high-fire position / end of operation
P74	Yellow	Postpurging
Valve proving		
P80	Yellow	Test space evacuating
P81	Yellow	Checking time fuel valve 1
P82	Yellow	Test space filling
P83	Yellow	Checking time fuel valve 2
Waiting phases (start prevention)		
P01	Red / yellow blinking	Undervoltage
P02	Yellow	Safety loop open
P04	Red / green blinking	Extraneous light on burner startup (timeout / locking after 30 s)
P90	Yellow	Pressure switch-min open
Lockout		
LOC	Red	Lockout phase

Operation :

	The lockout reset button (info button) (EK) is the key operating element for resetting the burner control and for activating / deactivating the diagnostics functions.
	The multicolor signal lamp (LED) is the key indicating element for visual diagnostics.

Both lockout reset button (EK) and signal lamp (LED) are located in the control panel.
There are 2 diagnostics choices:
1. Visual diagnostics: Indication of operating state or diagnostics of cause of fault
2. Diagnostics: Via internal display or to AZL2.. display and operating unit
Visual diagnostics:
In normal operation, the different operating states are indicated in the form of color codes according to the color code table given below.

Color code table for multicolor signal lamp (LED) **:**

State	Color code	Color
Waiting time (tw), other waiting states	❍.....	OFF
Ignition phase, ignition controlled	●❍●❍●❍●❍●❍●❍●	Blinking yellow
Operation, flame o.k.	□.....	Green
Operation, flame not o.k.	□❍□❍□❍□❍□❍□❍	Blinking green
Extraneous light on burner startup	□▲□▲□▲□▲□▲□▲	Green-red
Undervoltage	●▲●▲●▲●▲●▲●▲	Yellow-red
Fault, alarm	▲.....	Red
Error code output (refer to «Error code table»)	▲❍ ▲❍ ▲❍ ▲❍	Blinking red
Interface diagnostics	▲▲▲▲▲▲▲▲	Red flicker light
Heating request	●.....	Yellow
Heating request	●●▲●●▲●●▲●●▲●●	Yellow

Key

.....	Steady on
❍	Led off
▲	Led red
●	Led yellow
□	Led green

Program sequence :

Version 1:

- Ignition load < low-fire
- Prepurging in high-fire
- Parameter 515 = 1 (condition parameter 259.01 > 0 seconds)

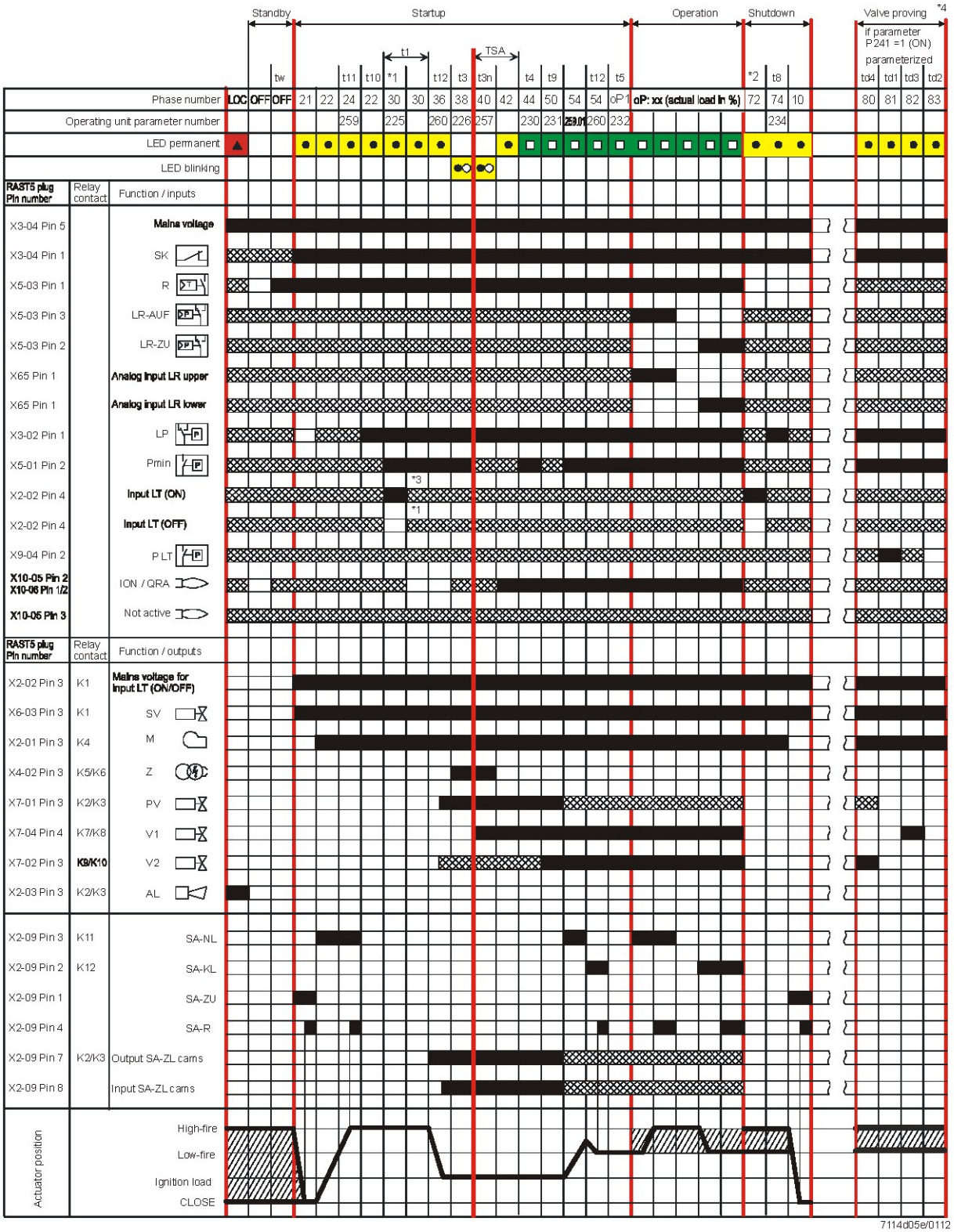

Program sequence :

Version 2:

- Ignition load > low-fire
- Prepurging in high-fire
- Parameter 515 = 1 (condition parameter 259.01 = 0 seconds)

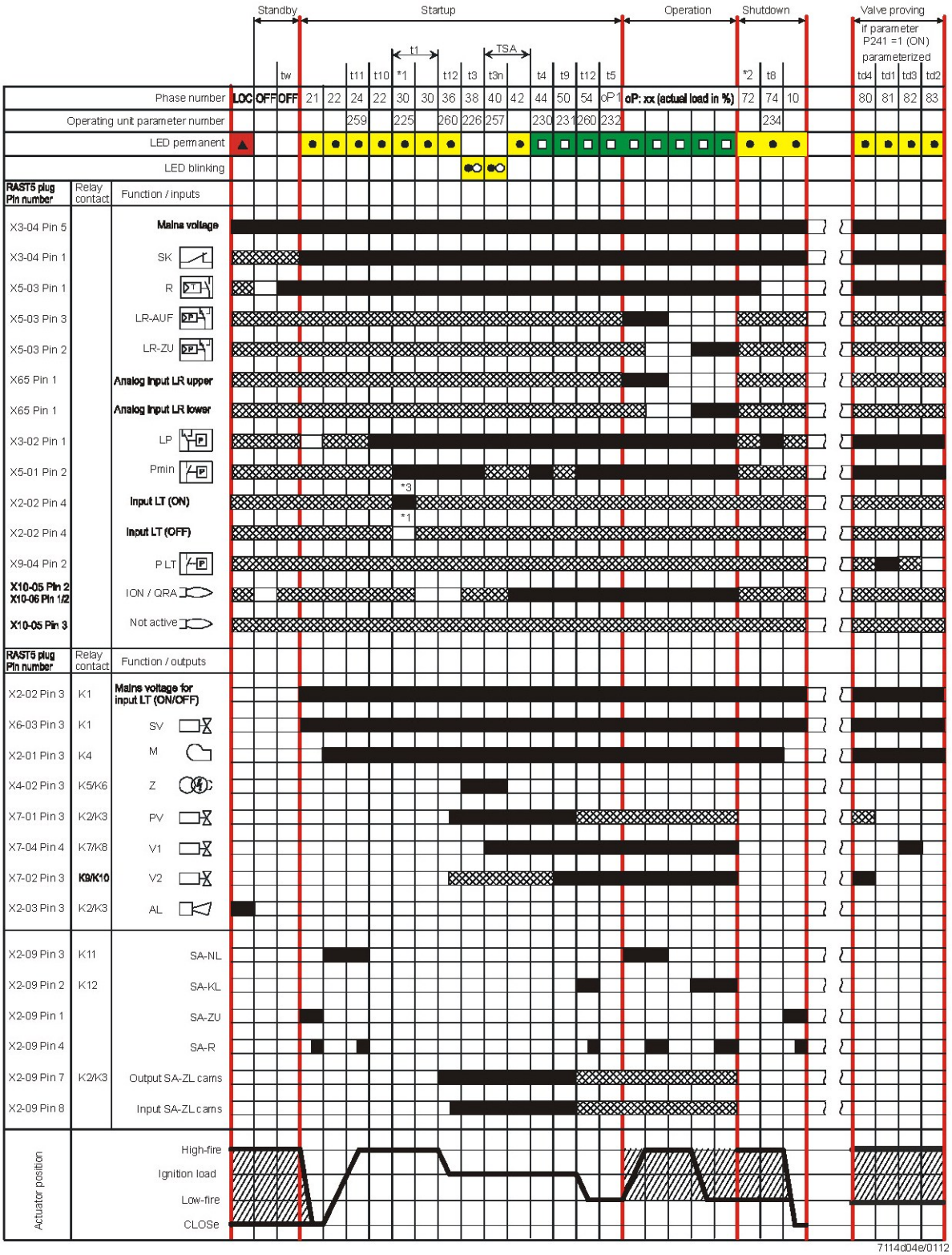

Phase number	Function
LOC	Lockout phase
OFF	Standby, waiting for heat demand
oP	Operation, modulating operation
oP1	Interval until release of load controller target (analog or 3-position step input)
01	Under voltage
02	Safety loop open
04	Extraneous light on burner startup (timeout/locking after 30 seconds)
08	Mains ON/test phase (e.g. detector test)
10	Shutdown, actuator opens in CLOSE position (homerun)
21	Safety valve ON, air pressure switch OFF, actuator opens in CLOSE position
22	Part 1: Fan motor ON
	Part 2: Specified time (t10) air pressure switch (LP)
	Message (timeout) stabilization air pressure switch
24	Actuator opens in prepurge position
30	Part 1: Prepurge time (t1) without extraneous light test
	Valve proving after mains ON, lockout
	Part 2: Prepurge time (t1) with extraneous light test
36	Actuator closes in ignition load
38	Preignition (t3)
40	Postignition time (t3n), parameter 257 + 0.3 seconds
42	Flame detection
44	Interval (t4): End of safety time (TSA) and burner valve 2 ON
50	2nd safety time (t9)
54	Parameter 259.01: Actuator opens in > low-fire
	Parameter 260: Actuator closes in low-fire
72	End of operation, checking if valve proving (LT) shall be performed
74	Postpurging (t8)
80	Test space evacuation (td4)
81	Test time (td1) fuel valve 1 (V1)
82	Test space filling (td3)
83	Test time (td2) fuel valve 2 (V2)
90	Pressure switch-min open safety shutdown
*1	Valve proving is conducted when…
	- parameter 241.00 = 1 and parameter 241.02 = 1, or
	- parameter 241.00 = 1 and parameter 241.01 = 0
*2	Valve proving is conducted when…
	- parameter 241.00 = 1 and parameter 241.02 = 1, or
	- parameter 241.00 = 1 and parameter 241.01 = 1
*3	Valve proving (LT) will not be performed

Error code table :

Red blink code of fault signal lamp (LED)	Possible cause
2 x blinks	No establishment of flame at the end of the safety time (TSA)
	- Faulty or soiled flame detector - Faulty or soiled fuel valves - Poor adjustment of burner, no fuel - Faulty ignition equipment
3 x blinks	Air pressure switch (LP) faulty - Loss of air pressure after specified time (t10) - - Air pressure switch (LP) welded in no-load position
4 x blinks	Extraneous light on burner startup
5 x blinks	Time supervision air pressure switch (LP) - Air pressure switch (LP) welded in working position
6 x blinks	Actuator position not reached - Actuator faulty - Wrong adjustment of cam - Actuator defective or blocked - False connection - Misadjustment
7 x blinks	Too many losses of flame during operation (limitation of repetitions) - Faulty or soiled flame detector - Faulty or soiled fuel valves - Poor adjustment of burner
8 x blinks	Free
9 x blinks	Free
10 x blinks	Wiring error or internal error, output contacts, other faults
12 x blinks	Valve proving (LT) - Fuel valve 1 (V1) leaking
13 x blinks	Valve proving (LT) - Fuel valve 2 (V2) leaking
14 x blinks	Error in connection with valve closure control POC
15 x blinks	Error code ≥15 Error code 22: Error of safety loop (SL)

During the time the cause of fault is diagnosed, the control outputs are deactivated:
- Burner remains shut down
- External fault indication (AL) at terminal X2-03, pin 3 steady on

Diagnostics of cause of fault is quit and the burner switched on again by resetting the burner control. Press the lockout reset button (info button) for about 1 second (<3 seconds).

Flame detection – detection electrode :

Short-circuit current	Max. AC 1 mA
Required detector current	Min. DC 2 µA, display approx. 45 %
Possible detector current	Max. DC 3 µA, display approx. 100 %
Permissible length of detector cable (laid separately)	30 m (core-earth 100 pF/m)

Measuring circuit

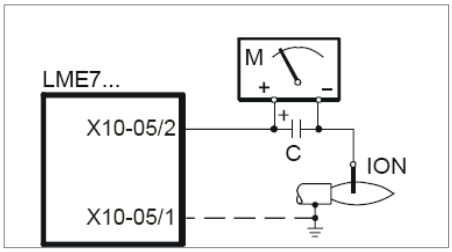

Keys

C	-	Electrolytic condenser 100...470 µF; DC 10...25 V
ION	-	Ionization probe
M	-	Microammeter Ri max. 5,000 Ω

Flame detection – UV probe :

Threshold values when flame is supervised by QRA...

- Start prevention (extraneous light)	Intensity (parameter 954) approx. 12 %
- Operation	Intensity (Parameter 954) approx. 13 %
Operating voltage	AC 280 V ±15 %
Mains frequency	50...60 Hz ±6 %
Required detector current	Min. 70 µA
Possible detector current	
- Operation	Max. 700 µA
Perm. length of detector cable	
- Normal cable, laid separately [1])	Max. 100 m

[1]) Multicore cable not permitted

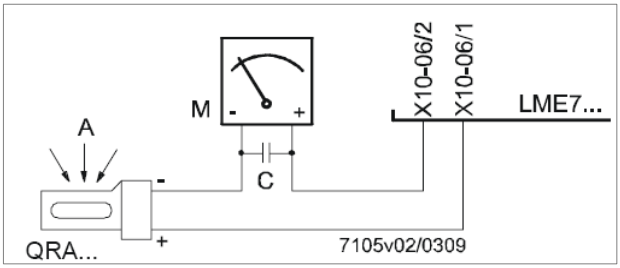

Keys

A	-	Exposure to light
C	-	Electrolytic condenser 100...470 µF; DC 10...25 V
M	-	Microammeter Ri max. 5,000 Ω

Warning!
Input QRA... is not short-circuit-proof!
Short-circuits of X10-06/2 against earth can destroy the QRA... input
Simultaneous operation of flame detector QRA... and detection electrode is not permitted
To make certain the age of the UV tube can be determined, the LME7... basic unit must always be connected to mains supply.

Gas proving system :

Valve proving is dependent on input valve proving ON / OFF (X2-02). When a leak is detected, the gas valve proving function ensures that the gas valves will not be opened and that ignition will not be switched on. Lockout will be initiated.
.

Valve proving with separate pressure switch (P LT)
Step 1: td4 – Evacuation of test space
Gas valve on the burner side is opened to bring the test space to atmospheric pressure.
Step 2: td1 – Test atmospheric pressure
When the gas has closed, the gas pressure in the test space must not exceed a certain level.
Step 3: td3 Filling of test space
Gas valve on the mains side opens to fill the test space.
Step 4: td2 – Test gas pressure
When the gas valve has closed, the gas pressure in the test space must not drop below a certain level.

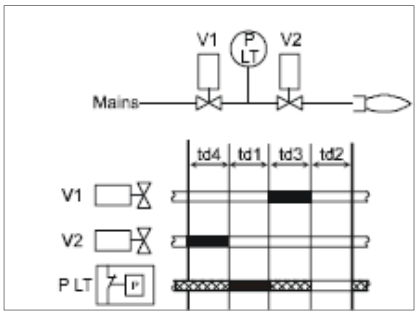

Controllo tenuta con pressostati separati

Keys
td1 Test atmospheric pressure
td2 Test gas pressure
td3 Filling of test space
td4 Evacuation of test space
V… Fuel valve
PLT Pressure switch valve proving
Input / output signal 1 (ON)
Input / output signal 0 (OFF)
Input permissible signal 1 (ON) or 0 (OFF)

No.	***Parameter***
242	Valve proving evacuation of test space
243	Valve proving time test atmospheric pressure
244	Valve proving filling of test space
245	Valve proving time test gas pressure

Instruction, control and modify via AZL2x :

The AZL2x.. display/programming unit is shown below:

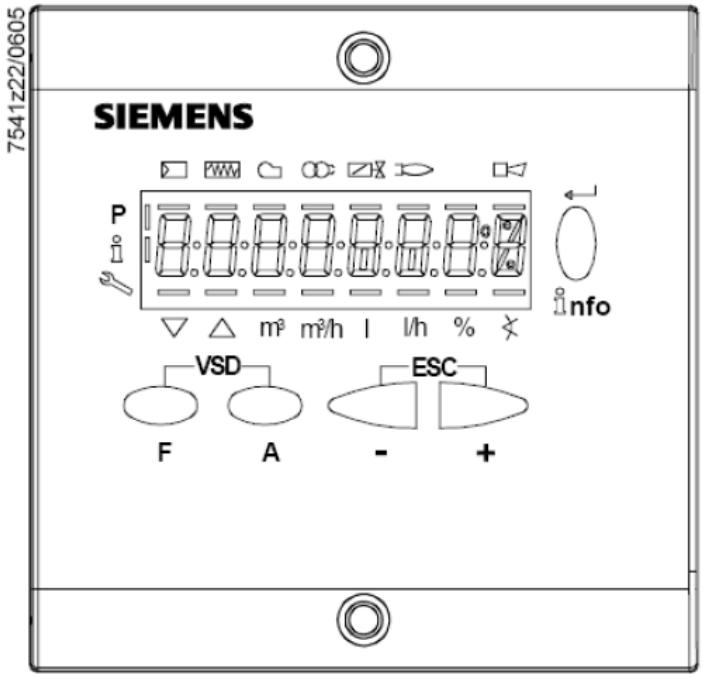

The keys functions are the following:

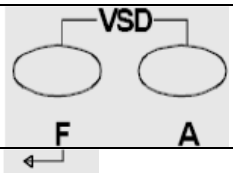	Key F + A While pressing the two keys contemporarly, the code message will appear: by entering the proper password it is possible to access the Service mode.
	Info and Enter keys Used for Info and Service menues Used as Enter key in the setting modes Used as Reset key in the burner operation mode Used to enter a lower level menu
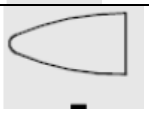	Key - Used for one menu level down Used to decrease a value
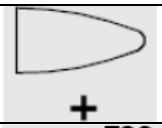	Key + Used for one menu level up Used to increase a a value
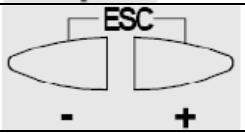	Keys (+ & -)= ESC By pressing + and - at the same time, the ESCAPE function is performed No adoption of value One menu level down

The display will show these data:

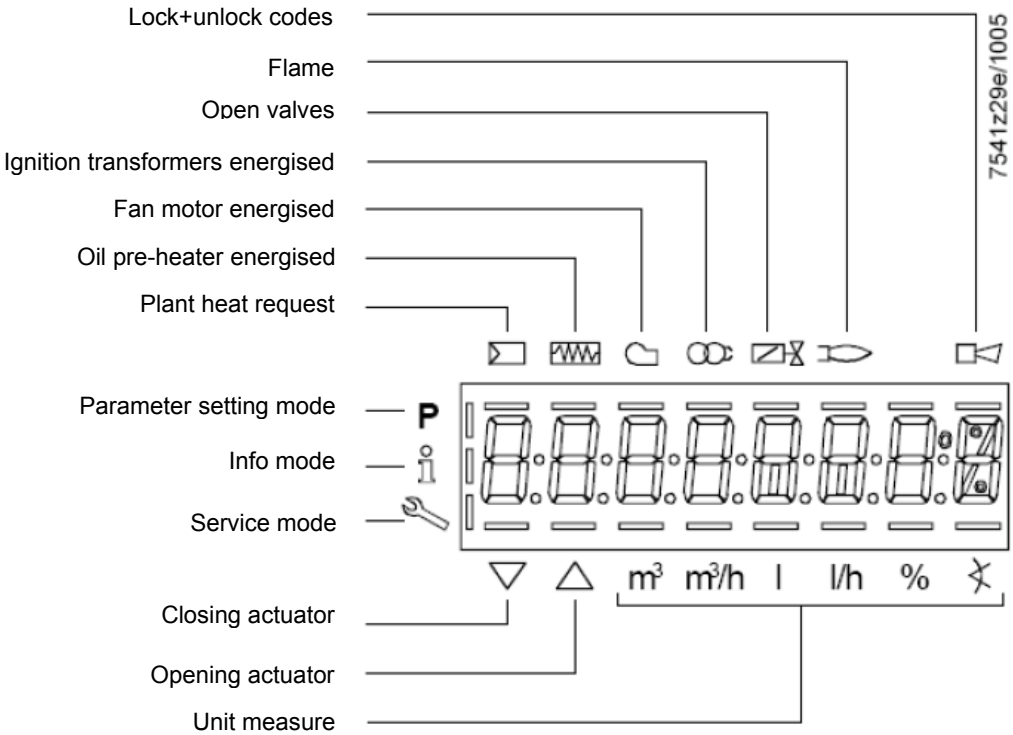

While pushing the

button together with whatever else button, LME73 locks out; the display shows

On stand-by position, 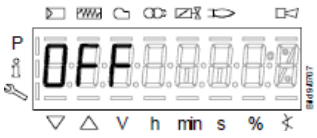

appears

On operation, all the phases appears with their number.

List of phase with display AZL2x :

Phase number	**Function**
Standby	
OFF	Standby, waiting for heat request
Ph08	Power ON / test phase (e.g. detector test)
Startup	
Ph21	Safety valve ON, air pressure switch test / POC test (timeout / locking after 5 seconds), actuator opens in low-fire position / CLOSE position
Ph22	Fan motor ON or air pressure switch test / settling time
Ph24	Actuator travels to the prepurge position
Ph30	Prepurging
Ph36	Actuator closes until ignition load / low-fire is reached, and parameter 259.02: Actuator opens to a position > ignition load
Ph38	Preignition
Ph40	1st safety time (TSA1) / ignition transformer ON
Ph42	Safety time (ignition transformer OFF), flame check
Ph44	Interval: End of safety time and fuel valve 1 (V1) ON
Ph50	2nd safety time (TSA2)
Ph54	P259.01: Actuator opens in > low-fire
Ph54	P260: Actuator closes in low-fire
oP1	Interval until release of load controller target (analog or 3-position step input)
Operation	
oP	Operation, modulating operation
Shutdown	
Ph10	Shutdown, actuator opens in CLOSE position (home run)
Ph72	Actuator opens in high-fire position / end of operation
Ph74	Postpurging
Valve proving	
Ph80	Test space evacuating
Ph81	Checking time fuel valve 1
Ph82	Test space filling
Ph83	Checking time fuel valve 2
Waiting phases (start prevention)	
Ph01	Undervoltage
Ph02	Safety loop open
Ph04	Extraneous light at burner startup (timeout / locking after 30 seconds)
Ph90	Pressure switch-min open → safety shutdown
Lockout	
LOC	Lockout phase

Error code list with operation via internal AZL :

Error code	*Clear text*	*Possible cause*
Loc 2	No establishment of flame at the end of the safety time (TSA)	- Faulty or soiled fuel valves - Faulty or soiled flame detector - Poor adjustment of burner, no fuel - Faulty ignition equipment
Loc 3	Air pressure faulty (air pressure switch (LP) welded in no-load position, decrease to spe-cified time (t10) (air pressure switch (LP) re-sponse time)	Air pressure switch (LP) faulty - Loss of air pressure signal after specified time (t10) - Air pressure switch (LP) is welded in no-load position
Loc 4	Extraneous light	Extraneous light when burner startup
Loc 5	Air pressure faulty, air pressure switch wel-ded in working position	Time out air pressure switch (LP) - Air pressure switch (LP) is welded in working position
Loc 6	Fault of actuator	- Actuator faulty or blocked - Faulty connection - Wrong adjustment
Loc 7	Loss of flame	Too many losses of flame during operation (limitation of repetitions) - Faulty or soiled fuel valves - Faulty or soiled flame detector - Poor adjustment of burner
Loc 8	---	Free
Loc 9	---	Free
Loc 10	Error not relatable (application), internal error	Wiring error or internal error, output contacts, other faults
Loc 12	Valve proving	Fuel valve 1 (V1) leak
Loc 13	Valve proving	Fuel valve 2 (V2) leak
Loc 22	Safety loop open	- Gas pressure switch-max open - Safety limit thermostat cut out
Loc 138	Restore process successful	Restore process successful
Loc 167	Manual locking	Manual locking
Loc: 206	AZL2... incompatible	Use the latest version

Entering the Parameter levels:

y means of a proper use of the keys, it is possible to enter the various level parameters, as shown in the following flow chart :

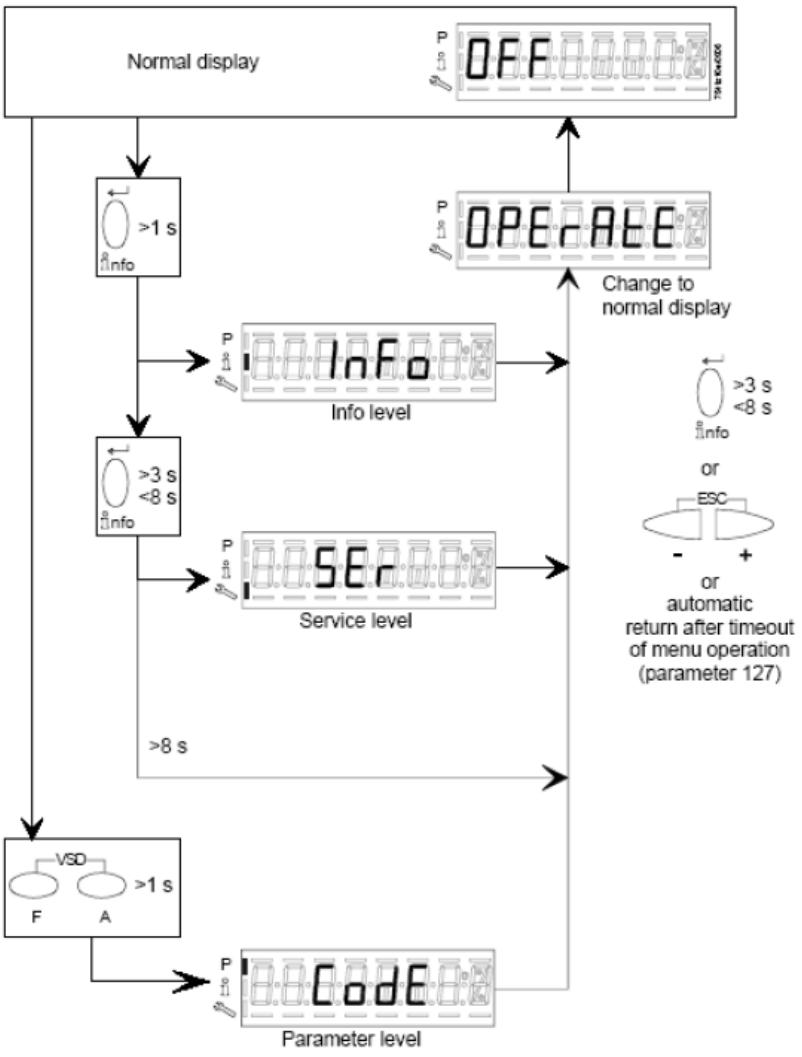

Info level :

Keep pushing the

button until 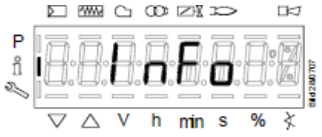

appears. Use + or - for scrolling the parameter list. If on the right side a dash-dot appears, it means the display doesn't show the full description. *Push*

again for 1 to 3 s in order to show the full description.

Below the visible **Info** parameters:

Parameter number	Parameter list PME73.000Ax + PME73.831AxBC LME73.831AxBC	Edit	Value range Min.	Value range Max.	Resolution	Factory setting	Password level reading from level	Password level writing from level
100	**General**							
102	Identification date	Read only	---	---	---		Info	---
103	Identification number	Read only	0	9999	1		Info	---
113	Burner identification	Read only	x	xxxxxxxx	1		Info	---
164	Numbers of startups resettable	Resettable	0	999999	1		Info	Info
166	Total number of startups	Read only	0	999999	1		Info	---
170.00	Switching cycles actuator relay K12	Read only	0	999999	1		Info	---
170.01	Switching cycles actuator relay K11	Read only	0	999999	1		Info	---
170.02	Switching cycles actuator relay K2	Read only	0	999999	1		Info	---
170.03	Switching cycles actuator relay K1	Read only	0	999999	1		Info	---
171	Max. switching cycles actuator relay	Read only	0	999999	1		Info	---

Service level :

Keep pushing the

button until 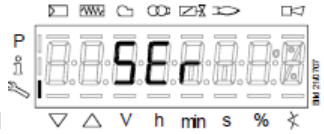

appears. Use + or - for scrolling the parameter list. . If on the right side a dash-dot appears, it means the display doesn't show the full description. *Push*

again for 1 to 3 s in order to show the full description.

Below the visible **Info** parameters:

Parameter number	Parameter list PME73.000Ax + PME73.831AxBC LME73.831AxBC	Edit	Value range Min.	Value range Max.	Resolution	Factory setting	Password level reading from level	Password level writing from level
700	**Error history**							
701	Current error:	Read only					Service	---
	00: Error code		2	255	1			
	01: Startup meter reading		0	999999	1			
	02: MMI phase		---	---	---			
	03: Power value		0%	100%	1			
702	Error history former 1:	Read only					Service	---
	00: Error code		2	255	1			
	01: Startup meter reading		0	999999	1			
	02: MMI phase		---	---	---			
	03: Power value		0%	100%	1			
•								
•								
•								
711	Error history former 10:	Read only					Service	---
	00: Error code		2	255	1			
	01: Startup meter reading		0	999999	1			
	02: MMI phase		---	---	---			
	03: Power value		0%	100%	1			

900	Process data							
936	Normalized speed	Read only	0%	100%	0.01 %		Service	---
951	Mains voltage	Read only	0 V	LME73.000A1: 175 V LME73.000A2: 350 V	1 V		Service	---
954	Flame intensity	Read only	0%	100%	1%		Service	---

Parameter level (Heating engeneering) :

This level lets the engineer to modify some burner parameters. It is protect with a 4 digit password (SO level) and a 5 digit password (OEM level)
Password input : push **F** and **A** buttons together until the display shows "**code"** and 7 underlines. The left one flashes. By **+** or **-** move the flashing underline until it is on the desired position and push "enter". The underline becomes a dash. By means of **+** or **-,** choose the right character and push "enter". Input the whole password and the **PArA** appears and later on **000 Int** .
Scroll the parameters using **+** or **-: 000Int**, **100**, **200**, **500**, **600 are on the display**. Choose the proper parameter group with the **enter** button and scroll the options with **+** e poi **-** (below the full par set: the two columns on the right give the level access). Choose the parameter to be modified with "enter" is writing is allowed. The parameter now flashes: **+** or **–** modifies the parameter and **enter** confirms. **+** and **-** pushed togther movbe the menu one step back. Push **+** and **-** several times in order to get the home position..

Parameter number	Parameter list PME73.000Ax + PME73.831AxBC LME73.831AxBC	Edit	Value range Min.	Value range Max.	Resolution	Factory setting	Password level reading from level	Password level writing from level
0	**Internal parameter**							
41	Heating engineers password (4 characters)	Edit	xxxx	xxxx	---		---	OEM
42	OEM's password (5 characters)	Edit	xxxxx	xxxxx	---		---	OEM
60	Backup / restore	Edit	Restore	Backup	---		---	SO
100	**General**							
123	Min. power control step	Edit	1%	10%	0.1		SO	SO
140	Mode display of Display and operating unit AZL2... 1 = Standard (program phase) 2 = Flame 1 (QRA... / ION) 3 = Flame 2 (QRB... / QRC...) 4 = Active power (power value)	Edit	1	4	4		SO	SO
200	**Burner control**							
224	Specified time (t10) air pressure switch (LP)	Edit	0 s	13.818 s	0.294 s	12,054	SO	OEM
225	Gas: Prepurge time (t1)	Edit	0 s	1237 s	4.851 s	29,106	SO	OEM
226	Gas: Preignition time (t3)	Edit	1.029 s	37.485 s	0.147 s	2,058	SO	OEM
230	Interval (t4): End of safety time (TSA) - fuel valve 1 (V1) ON	Edit	3.234 s	74.97 s	0.294 s	3,234	SO	OEM
231	Interval (t9): Fuel valve 1 (V1) ON - pilot valve (PV) OFF	Edit	0 s	74.97 s	0.294 s	2,940	SO	OEM
232	Interval (t5): Pilot valve (PV) OFF - load controller (LR) release	Edit	2.058 s	74.97 s	0.294 s	8.820	SO	OEM
234	Gas: Postpurge time (t8)	Edit	0 s	1237 s	4.851 s	0	SO	OEM
239	Gas: Intermittent operation after 24 hours of continuous operation 0=OFF 1=ON	Edit	0	1	1	1	SO	OEM

240	Repetition in the event of loss of flame during operation 0 = None 1 = None 2 = 1 x Repetition	Edit	0	2	1	0	SO	OEM
241.00	Valve proving 0 = Off 1 = On	Edit	0	1	1	1	SO	OEM
241.01	Valve proving 0 = During prepurge time (t1) 1 = During postpurge time (t8)	Edit	0	1	1	0	SO	OEM
241.02	Valve proving 0 = According to P241.01 1 = During prepurge time (t1) and postpurge time (t8)	Edit	0	1	1	0	SO	OEM
242	Valve proving test space evacuating	Edit	0 s	2.648 s	0.147 s	2,646	SO	OEM
243	Valve proving time test atmospheric pressure	Edit	1.029 s	37.485 s	0.147 s	10,290	SO	OEM
244	Valve proving test space filling	Edit	0 s	2.648 s	0.147 s	2,646	SO	OEM
245	Valve proving time test gas pressure	Edit	1.029 s	37.485 s	0.147 s	10,290	SO	OEM
254	Response time detector error 0 = 1 s 1 = 3 s	Edit	0	1	1	0	SO	OEM
257	Gas: Postignition time (t3n – 0.3 seconds)	Edit	0 s	13.23 s	0.147 s	2,205	SO	OEM
259.00	Opening time of actuator (t11) (timeout for lockout)	Edit	0 s	1237 s	4.851 s	67,914	SO	OEM
259.01	Opening time of actuator from ignition load to low-fire position	Edit	0 s	37.485 s	0.147 s	14,994	SO	OEM
259.02	Opening time of actuator from low-fire to ignition load position	Edit	0 s	37.485 s	0.147 s	14,994		
260	Closing time of actuator (t12) (timeout for lockout)	Edit	0 s	1237 s	4.851 s	67,914	SO	OEM
500	**Ratio control**							
515	Actuator position during prepurge time (t1) and postpurge time (t8) 0: Purging in low-fire 1: Purging in high-fire	Edit	0	1	1	1	SO	OEM
560	Pneumatic combustion control 0 = off / 3-step modulation 1 = PWM fan / analog modulation ~~2 = air damper / analog modulation (feedback potentiometer ASZxx.3x required)~~	Edit	0	2	1	1	SO	SO

600	Power setting							
654	Analog input (feedback potentiometer ASZxx.3x required) 0 = 3-position step input 1 = 0...10 V 2 = 0...135 Ω 3 = 0...20 mA 4 = 4...20 mA with lockout at I <4 mA 5 = 4...20 mA	Edit	0	5	1	0	SO	SO

WARNING	
Parameter Num. : **41** **42** **60** **123** **140** **242** **243** **244** **245** **259.01**	**Adjustable parameters from SO or OEM levels for LME73.831AxBC**

Note: Specifications and data subject to change. Errors and omissions excepted.

CIB UNIGAS 600V

CONTROLLER

CE

USER'S MANUAL

COD. M12925CA Rel 1.2 08/2014

SOFTWARE VERSION **1.0x T73**
code **80379** / Edition **01** - **06/2012**

1 • INSTALLATION

• Dimensions and cut-out; panel mounting

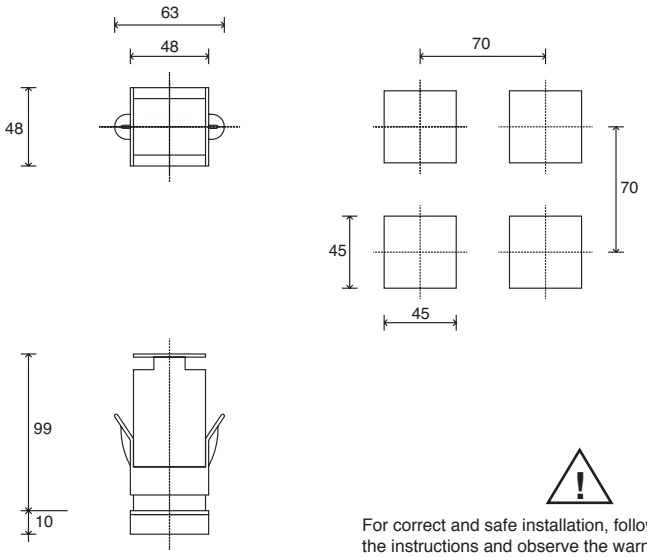

For correct and safe installation, follow the instructions and observe the warnings contained in this manual.

Panel mounting:

To fix the unit, insert the brackets provided into the seats on either side of the case.
To mount two or more units side by side, respect the cut-out dimensions shown in the drawing.

CE MARKING: The instrument conforms to the European Directives 2004/108/CE and 2006/95/CE with reference to the generic standards: **EN 61000-6-2** (immunity in industrial environment) **EN 61000-6-3** (emission in residential environment) **EN 61010-1** (safety).

MAINTENANCE: Repairs must be done only by trained and specialized personnel.
Cut power to the device before accessing internal parts.
Do not clean the case with hydrocarbon-based solvents (Petrol, Trichlorethylene, etc.). Use of these solvents can reduce the mechanical reliability of the device. Use a cloth dampened in ethyl alcohol or water to clean the external plastic case.

SERVICE: GEFRAN has a service department. The warranty excludes defects caused by any use not conforming to these instructions.

EMC conformity has been tested with the following connections

FUNCTION	CABLE TYPE	LENGTH
Power supply cable	1 mm²	1 m
Relay output cable	1 mm²	3,5 m
TC input	0,8 mm² compensated	5 m
Pt100 input	1 mm²	3 m

2 • TECHNICAL SPECIFICATIONS

Display	2x4 digit green, high display 10 and 7mm
Keys	4 of mechanical type (Man/Aut, INC, DEC, F)
Accuracy	0.2% f.s. ±1 digit ambient temperature 25°C
Main input (settable digital filter)	TC, RTD, PTC, NTC 60mV,1V Ri≥1MΩ; 5V,10V Ri≥10KΩ; 20mA Ri=50Ω Tempo di campionamento 120 msec.
Type TC Thermocouples (ITS90)	Type TC Thermocouples : J,K,R,S,T (IEC 584-1, CEI EN 60584-1, 60584-2) ; custom linearization is available / types B,E,N,L GOST,U,G,D,C are available by using the custom linearization.
Cold junction error	0,1° / °C
RTD type (scale configurable within indicated range, with or without decimal point) (ITS90) *Max line resistance for RTD*	DIN 43760 (Pt100), JPT100 20Ω
PTC type / NTC Type	990Ω, 25°C / 1KΩ, 25°C
Safety	detection of short-circuit or opening of probes, LBA alarm
°C / °F selection	configurable from faceplate
Linear scale ranges	-1999 to 9999 with configurable decimal point position
Controls	PID, Self-tuning, on-off
pb - dt - it	0,0...999,9 % - 0,00...99,99 min - 0,00...99,99 min
Action	Heat / Cool
Control outputs	on / off
Maximum power limit heat / cool	0,0...100,0 %
Cycle time	0...200 sec
Main output type	relay, logic, continuous (0...10V Rload ≥ 250KΩ, 0/4...20mA Rload ≤ 500Ω)
Softstart	0,0...500,0 min
Fault power setting	-100,0...100,0 %
Automatic blanking	Displays PV value, optional exclusion
Configurable alarms	Up to 3 alarm functions assignable to an output, configurable as: maximum, minimum, symmetrical, absolute/deviation, LBA
Alarm masking	- exclusion during warm up - latching reset from faceplate or external contact
Type of relay contact	NO (NC), 5A, 250V/30Vdc cosφ=1
Logic output for static relays	24V ±10% (10V min at 20mA)
Transmitter power supply	15/24Vdc, max 30mA short-circuit protection
Power supply (switching type)	(std) 100 ... 240Vac ±10% (opt.) 11...27Vac/dc ±10%; 50/60Hz, 8VA max
Faceplate protection	IP65
Working / Storage temperature range	0...50°C / -20...70°C
Relative humidity	20 ... 85% non-condensing
Environmental conditions of use	for internal use only, altitude up to 2000m
Installation	Panel, plug-in from front
Weight	160g for the complete version

3 • DESCRIPTION OF FACEPLATE

Function indicators
Indicates modes of operation

L1 MAN/AUTO = OFF (automatic control)
ON (manual control)

L2 PRE-HEATING = ON (running)

L3 SELFTUNING = ON (enabled Self)
OFF (disabled Self)

Automatic/Manual adjustment selection
Active only when PV display visualises the process variable (button pressed for at least 5 sec.)

Indication of output states
OUT 1 (AL1); OUT 2 (OPEN); OUT 3 (CLOSED)

PV Display: Indication of process variable
Error Indication: LO, HI, Sbr, Err
LO= the value of process variable is < di LO_S
HI= the value of process variable is > di HI_S
Sbr= faulty sensor or input values higher than max. limits
Err= PT100 third wire opened for PT100, PTC or input values lower than min. limits (i.e.: TC wrong connection)

SV display: Indication of setpoint

Function key
Gives access to the various configuration phases •• Confirms change of set parameters and browses next or previous parameter (if Auto/Man key is pressed)

"Inc" and "Dec" key
Press to increment (decrement) any numerical parameter •• Increment (decrement) speed is proportional to time key stays pressed •• The operation is not cyclic: once the maximum (minimum) value of a field is reached, the value will not change even if the key remains pressed.

4 • CONNECTIONS

• Outputs

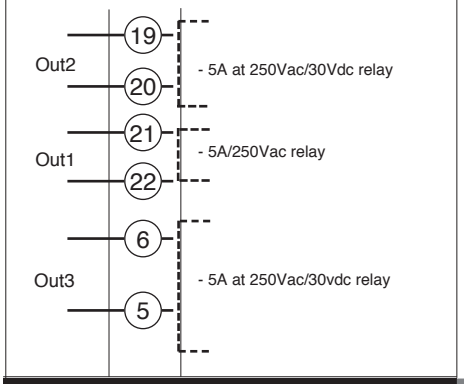

TOP

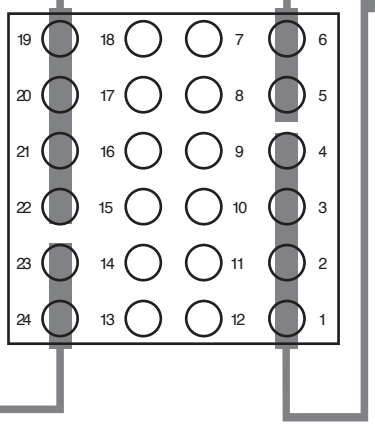

• Power Supply

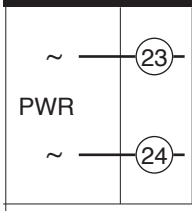

Standard:
100...240Vac ± 10%

Optional:
11...27Vac/Vdc ± 10%

Max. power 8VA; 50/60 Hz

• Inputs

• TC Input

Available thermocouples:
J, K, R, S, T
(B, E, N, L, U, G, D, C custom linearization is available)
- Observe polarities
- For extensions, use the correct compensating cable for the type of TC used

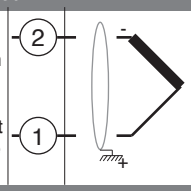

• Linear input with 3-wire transmitter

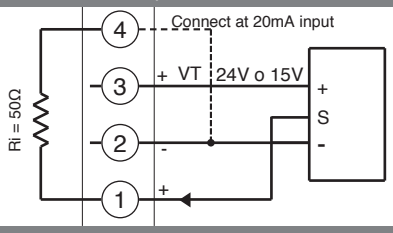

• Linear input (I)

Linear input in dc current

20mA, Ri = 50Ω

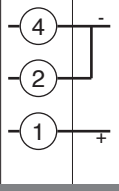

• Input 1 linear with transmitter 2 wires

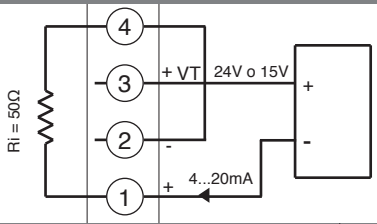

• Linear input (V)

Linear input in dc voltage
60mV, 1V
Ri > 1MΩ
5V, 10V
Ri > 10KΩ

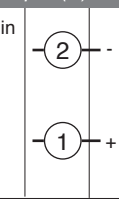

• Pt100 / PTC / NTC

Use wires of adequate diameter (min. 1mm²)
PT100, JPT100, PTC, NTC

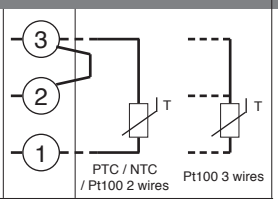

• Identification of boards

Power board - Solder side

Select transmitter voltage

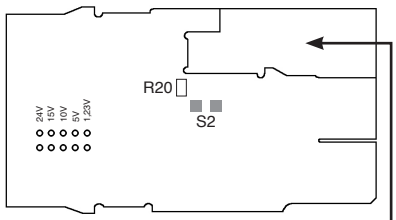

N.B. : you can keep the **OUT1** relay energized at power-up by inserting jumper **S2** and removing resistance **R20**.

CPU board - Component side

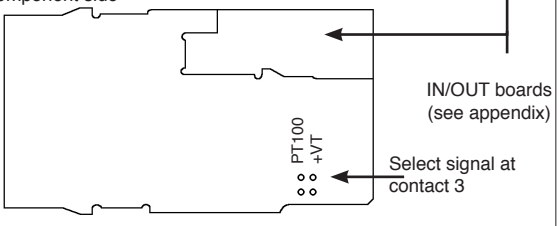

IN/OUT boards (see appendix)

Select signal at contact 3

• Device structure

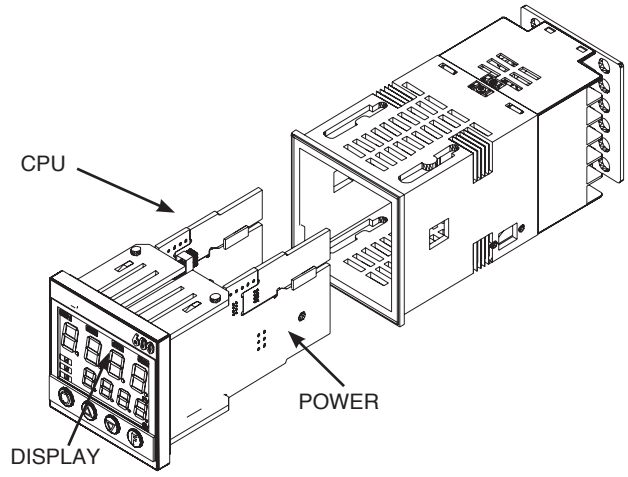

5 • "EASY" PROGRAMMING and CONFIGURATION

THE EASY CONFIGURATION (Pro=0...12) IS SUITABLE FOR VERSIONS WITH AL1/OPEN/CLOSED

S4 Jumper (CPU) ON

LEVEL 1 MENU

P.V. / S.V.	P.V. / S.V. Process variable (PV display) Work Setpoint (SV display) or control output value with controller in manual
_SP	Local Setpoint (scale points Lo.L...Hi.L)
HY.P	Positive hysteresis alarm 1 (0 ... +999 scale points)
HY.n	Negative hysteresis alarm 1 (0 ... -999 scale points)

PAS — Password

PAS = 99

Pro — Protection code

• Prot

12 — *Pro* — Protection code

Prot	Display	Modification
0	SP, Hy.P, Hy.n	SP, Hy.P , Hy.n
1	SP, Hy.P, Hy.n	SP
2	SP	

+ 4 to disable InP, Out
+ 8 to disable CFG

6 • PROGRAMMING and CONFIGURATION

LEVEL 1 MENU

	P.V. / S.V.	P.V. / S.V. Process variable (PV display) Work Setpoint (SV display) or control output value with controller in manual
80.0	_SP	Local Setpoint (Lo.L ... Hi.L)
+5.0	HY.P	Positive hysteresis alarm 1 (0 ... +999 scale points)
-5.0	HY.n	Negative hysteresis alarm 1 (0 ... +999 scale points)
	P.oS	Valve position indication (0.0 ... 100.0 %) (*)
	Ou.P	Control output value (*)

(*) The automatic return *PV/SV* display is disabled for these displays

If Inc, Dec, F keys are not pressed within 15 sec, display returns automatically to P.V. value.

INF — Information display

NO — S4 Jumper (CPU) = ON

CFG — Custom menu

InP — Input settings

Out — Output settings

PAS — Password

NO — PAS = 99

Pro — Protection code

Hrd — Hardware configuration

Lin — Input linearization

U.CA — User calibration

Keep the F key pressed to scroll the menus

Release the F key to select the displayed menu

Press the F key to access the parameters

Keep the F key pressed to exit any menu

Keep F + Auto/Man keys pressed for 2 sec. on any menu to go immediately to level 1 display

Pressing the Auto/Man + F keys on any menu immediately returns you to the previous parameter.

N.B.: Once a particular configuration is entered, all unnecessary parameters are no longer displayed

• InFo Display

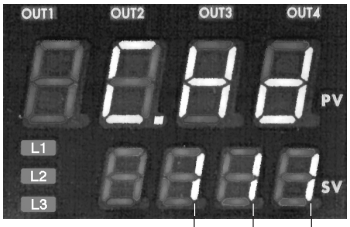

OUTPUT 2	OUTPUT 3	SERIAL COMMUNICATION
0 = None 1 = Relay	0 = None 1 = Relay	0 = None

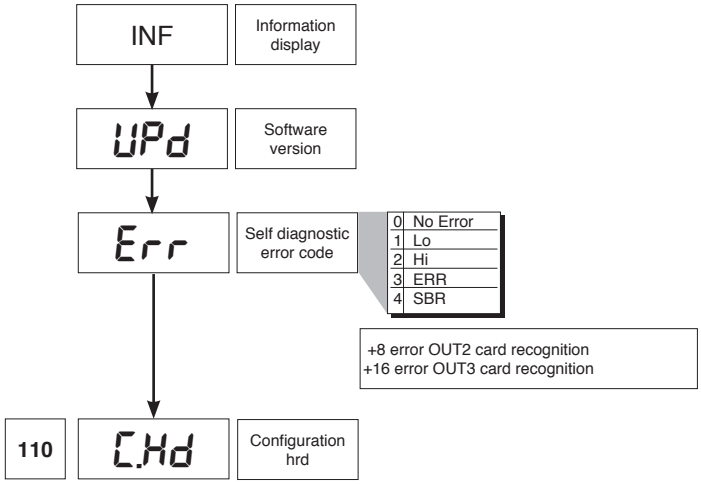

• CFG

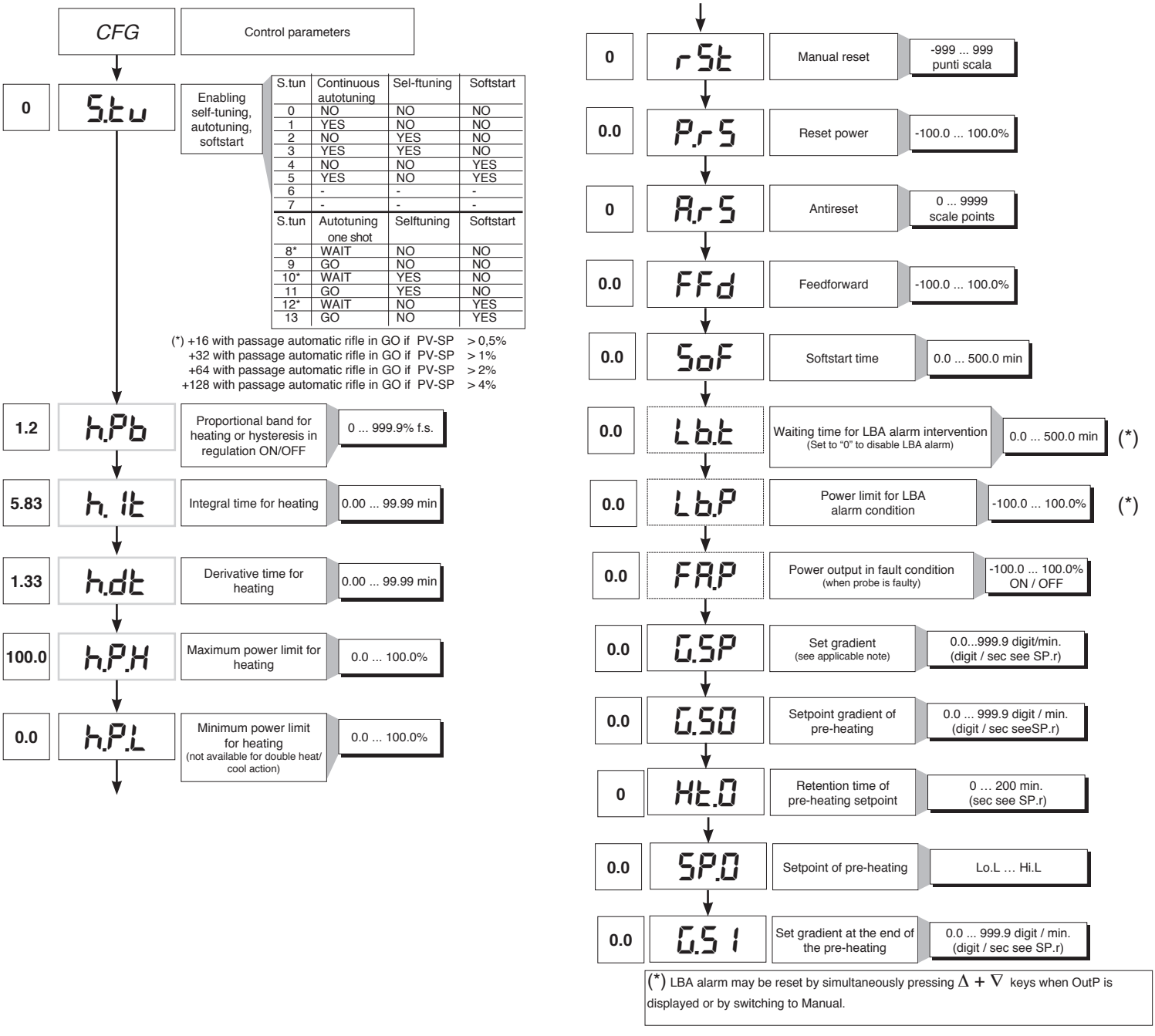

• InP

InP — Input settings

0 — SP.r — Def. remote setpoint — 0 default (remote setpoint present)

+2 Times of pre-heating and gradients of set digit/sec

30 — tYP. — Probe type, signal, enable custom linearization, and main input scale

Type	Probe type	without decimal point	with decimal point
	Sensore:	TC	
0	TC J °C	0/1000	0.0/999.9
1	TC J °F	32/1832	32.0/999.9
2	TC K °C	0/1300	0.0/999.9
3	TC K °F	32/2372	32.0/999.9
4	TC R °C	0/1750	0.0/999.9
5	TC R °F	32/3182	32.0/999.9
6	TC S °C	0/1750	0.0/999.9
7	TC S ° F	32/3182	32.0/999.9
8	TC T °C	-200/400	-199.9/400.0
9	TC T °F	-328/752	-199.9/752.0
28	TC	CUSTOM	CUSTOM
29	TC	CUSTOM	CUSTOM
30	PT100 °C	-200/850	-199.9/850.0
31	PT100 °F	-328/156 2	-199.9/999.9
32	JPT100 °C	-200/600	-199.9/600.0
33	JPT100 °F	-328/1112	-199.9/999.9
34	PTC °C	-55/120	-55.0/120.0
35	PTC °F	-67/248	-67.0/248.0
36	NTC °C	-10/70	-10.0/70.0
37	NTC °F	14/158	14.0/158.0
38	0...60 mV	-1999/9999	-199.9/999.9
39	0...60 mV	Custom scale	Custom scale
40	12...60 mV	-1999/9999	-199.9/999.9
41	12...60 mV	Custom scale	Custom scale
42	0...20 mA	-1999/9999	-199.9/999.9
43	0...20 mA	Custom scale	Custom scale
44	4...20 mA	-1999/9999	-199.9/999.9
45	4...20 mA	Custom scale	Custom scale
46	0...10 V	-1999/9999	-199.9/999.9
47	0...10 V	Custom scale	Custom scale
48	2...10 V	-1999/9999	-199.9/999.9
49	2...10 V	Custom scale	Custom scale
50	0...5 V	-1999/9999	-199.9/999.9
51	0...5 V	Custom scale	Custom scale
52	1...5 V	-1999/9999	-199.9/999.9
53	1...5 V	Custom scale	Custom scale
54	0...1 V	-1999/9999	-199.9/999.9
55	0...1 V	Custom scale	Custom scale
56	200mv..1V	-1999/9999	-199.9/999.9
57	200mv..1V	Custom scale	Custom scale
58	Cust10 V-20mA	-1999/9999	-199.9/999.9
59	Cust10 V-20mA	Custom scale	Custom scale
60	Cust 60mV	-1999/9999	-199.9/999.9
61	Cust 60mV	Custom scale	Custom scale
62	PT100-JPT	CUSTOM	CUSTOM
63	PTC	CUSTOM	CUSTOM
64	NTC	CUSTOM	CUSTOM

For custom linearization:
- LO signal is generated with variable below Lo.S or at minimum calibration value
- HI signal is generated with variable above Lo.S or at maximum calibration value

Max. non-linearity error for thermocouples (TC), resistors (PT100) and thermistors (PTC, NTC).

The error is calculated as deviation from theoretical value and is expressed as percentage of full scale (in °C).

S, R range 0...1750°C; error < 0.2% f.s. (t > 300°C) / for other range; error < 0.5% f.s.
T error < 0.2% f.s. (t > -150°C)
B range 44...1800°C; error < 0.5% f.s. (t > 300°C) / range 44,0...999,9; error < 1% f.s. (t > 300°C)
U range -99,9...99,9 and -99...99°C; error < 0.5% f.s. / for other range; error < 0.2% f.s. (t > -150°C)
G error < 0.2% f.s. (t > 300°C)
D error < 0.2% f.s. (t > 200°C)
C range 0...2300; error < 0.2% f.s. / for other range; error < 0.5% f.s.

NTC error < 0.5% f.s.

Tc: **J, K, E, N, L** error < 0,2% f.s.
JPT100 and **PTC** error < 0,2% f.s.
PT100 scale -200...850°C
Precision better than 0,2% f.s. at 25°C
In range 0...50°C:
- Precision better than 0,2% f.s. in range -200...400°C
- Precision better than 0,4% f.s. in range +400...850°C

(where f.s. refers to range -200... +850°C)

0.1 — FLt — Digital filter on input (if = 0 excludes averaging filter on sample value) — 0.0 ... 20.0 sec

0.5 — FLd — Digital filter on input display — 0 ... 9.9 scale points

1 — dP.S — Decimal point position for input scale

dP_S	Format
0	xxxx
1	xxx.x
2	xx.xx (*)
3	x.xxx (*)

(*) not available for TC, RTD, PTC and NTC scales

0.0 — Lo.S — Minimum limit of main input scale — min...max input range selected in tyP

850.0 — Hi.S — Maximum limit of main input scale — min...max input range selected in tyP

0 — oFS. — Offset correction of main input — -999 ... 999 scale points

30.0 — LoL — Lower limit for setting SP and absolute alarms — Lo.S ... Hi.S

130.0 — HiL — Upper limit for setting SP and absolute alarms — Lo.S ... Hi.S

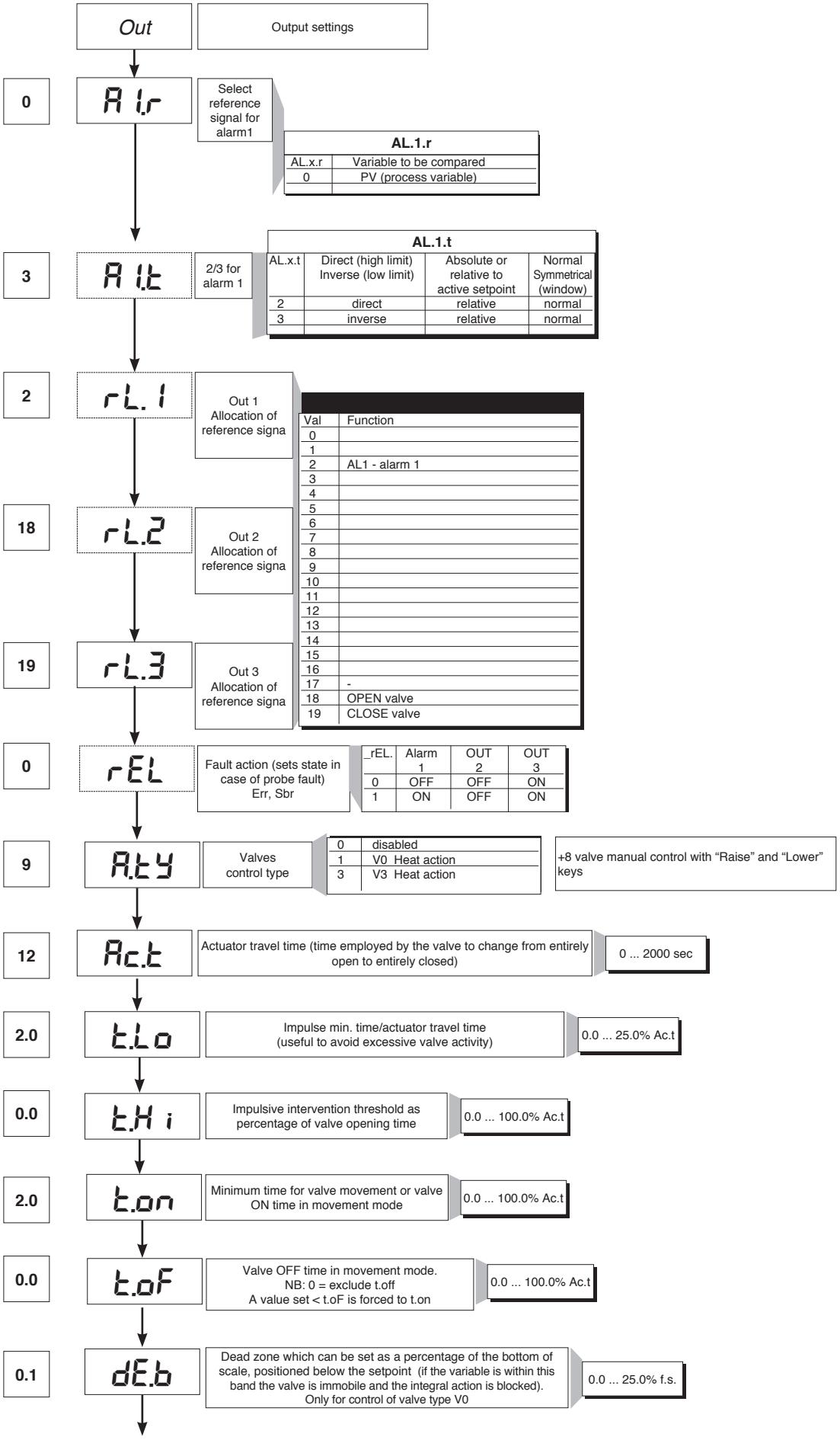
Out
Output settings
0
A 1.r
Select reference signal for alarm1
AL.1.r
AL.x.r
Variable to be compared
0
PV (process variable)
3
A 1.t
2/3 for alarm 1
AL.1.t
AL.x.t
Direct (high limit) Inverse (low limit)
Absolute or relative to active setpoint
Normal Symmetrical (window)
2
direct
relative
normal
3
inverse
relative
normal
2
rL. 1
Out 1 Allocation of reference signa
18
rL.2
Out 2 Allocation of reference signa
19
rL.3
Out 3 Allocation of reference signa
Val
Function
0
1
2
AL1 - alarm 1
3
4
5
6
7
8
9
10
11
12
13
14
15
16
17
-
18
OPEN valve
19
CLOSE valve
0
rEL
Fault action (sets state in case of probe fault) Err, Sbr
_rEL.
Alarm 1
OUT 2
OUT 3
0
OFF
OFF
ON
1
ON
OFF
ON
9
A.tY
Valves control type
0
disabled
1
V0 Heat action
3
V3 Heat action
+8 valve manual control with “Raise” and “Lower” keys
12
Ac.t
Actuator travel time (time employed by the valve to change from entirely open to entirely closed)
0 ... 2000 sec
2.0
t.Lo
Impulse min. time/actuator travel time (useful to avoid excessive valve activity)
0.0 ... 25.0% Ac.t
0.0
t.Hi
Impulsive intervention threshold as percentage of valve opening time
0.0 ... 100.0% Ac.t
2.0
t.on
Minimum time for valve movement or valve ON time in movement mode
0.0 ... 100.0% Ac.t
0.0
t.oF
Valve OFF time in movement mode.
NB: 0 = exclude t.off
A value set < t.oF is forced to t.on
0.0 ... 100.0% Ac.t
0.1
dE.b
Dead zone which can be set as a percentage of the bottom of scale, positioned below the setpoint (if the variable is within this band the valve is immobile and the integral action is blocked).
Only for control of valve type V0
0.0 ... 25.0% f.s.

• Prot

12 — *Pro* — Protection code

Prot	Display	Modification
0	SP, Hy.P, Hy.n, AL.2, AL.3, PoS, OuP, INF	SP, Hy.P , Hy.n, AL.2, AL.3, PoS
1	SP, Hy.P, Hy.n, AL.2, AL.3, PoS, OuP, INF	SP
2	SP, OuP, INF	

+ 4 to disable InP, Out
+ 8 to disable CFG
+ 16 to disable SW “power-up - power down”
+ 32 disable manual power latching
+ 64 to disable manual power modification
+128 enables full configuration

Note: OuP and INF only display configuration extended

• Hrd

Hrd — Hardware configuration

0 — *hd.1* — Enable multiset instrument control by serial

6 — *Ctr* — Control type

Val	Control type
0	P heat
1	
2	
3	PI heat
4	
5	
6	PID heat
7	
8	
9	ON-OFF heat
10	
11	
12	
13	
14	

Selection of derivative action sampling time:
+ 0 sample 1 sec.
+ 16 sample 4 sec.
+ 32 sample 8 sec.
+ 64 sample 240 msec.

Note: LbA alarm is not enabled with ON/OFF type control

1 — *AL.n* — Select number of enabled alarms

AL.nr	Alarme1	Alarm 2	Alarm 3
1	enabled	disabled	disabled

1 — *but.* — Function of M/A keys

butt	
0	No function (key disenabled))
1	MAN / AUTO controller
2	
3	HOLD
4	
5	
6	Start/Stop selftuning
7	Start/Stop autotuning
8	

+ 16 disables the “back menu” function (Auto/Man + F keys) in the configuration menus

0 — *dSP* — Defining SV display function

diSP	Lower display (SV) function
0	SSP - setpoint enabled
1	PoS - valve position
2	Control output value
3	Deviation (SSP - PV)

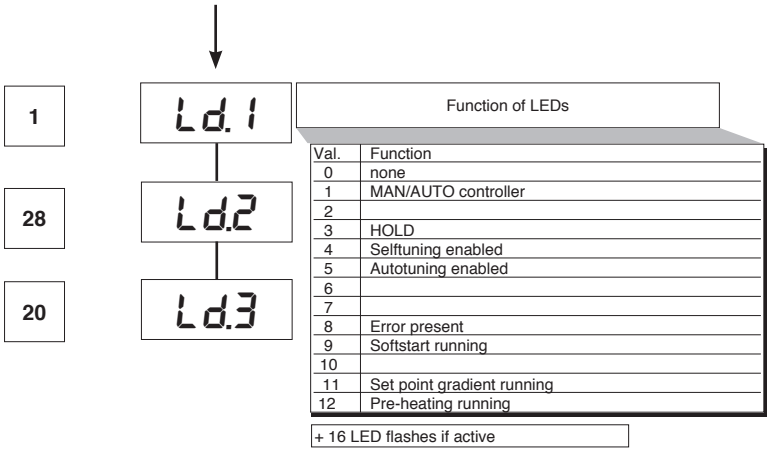

Val.	Function
0	none
1	MAN/AUTO controller
2	
3	HOLD
4	Selftuning enabled
5	Autotuning enabled
6	
7	
8	Error present
9	Softstart running
10	
11	Set point gradient running
12	Pre-heating running

+ 16 LED flashes if active

• Lin

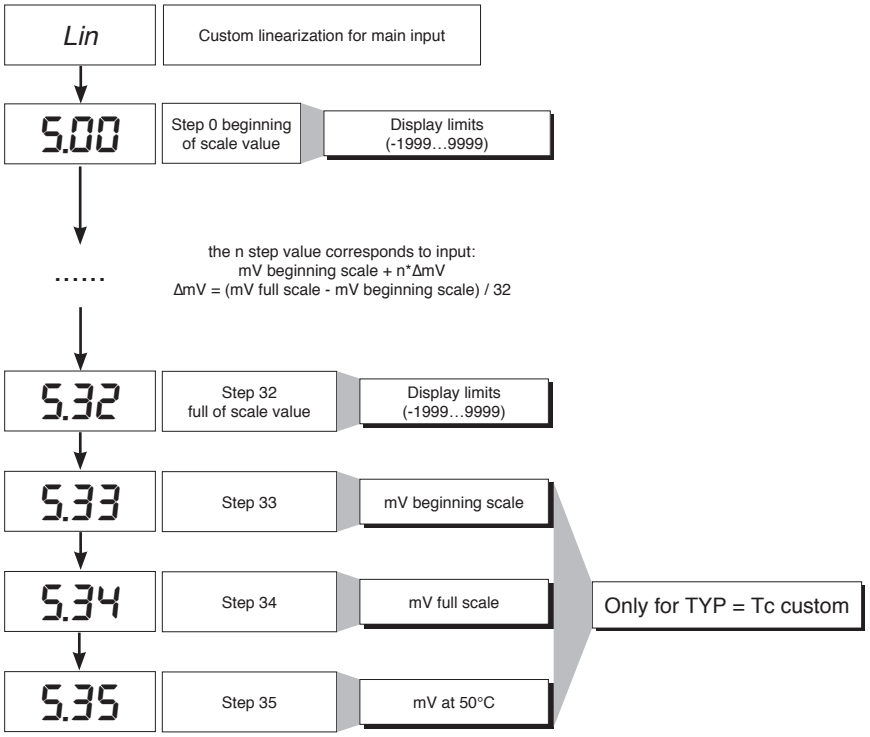

• U.CAL

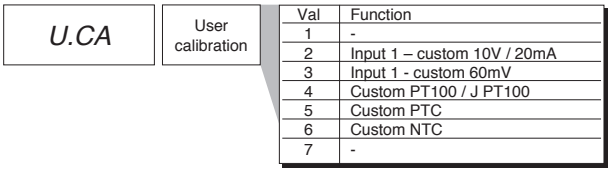

Val	Function
1	-
2	Input 1 – custom 10V / 20mA
3	Input 1 - custom 60mV
4	Custom PT100 / J PT100
5	Custom PTC
6	Custom NTC
7	-

7 • CONSENT FOR BURNER AL1

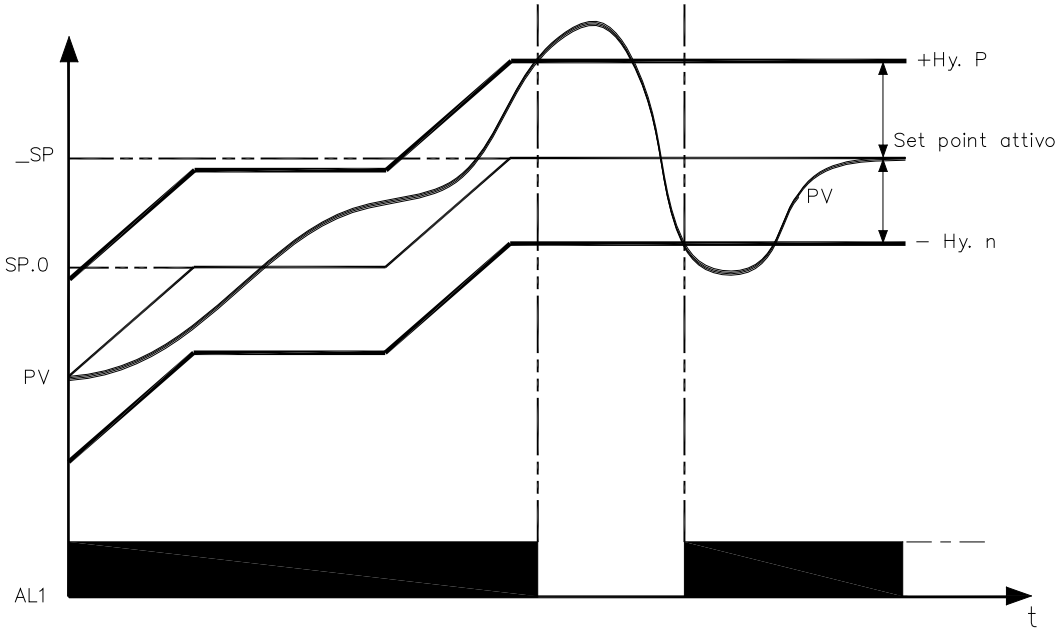

Obtain burner consent by configuring alarm 1 as inverse deviation with positive hysteresis Hy.P and negative hysteresis Hy.n

8 • PRE-HEATING FUNCTION

Enable the pre-heating function by setting parameters GS.0, Ht.0, GS.1 other than zero.
It consists of three phases that are activated sequentially at firing:

- **Ramp 0 phase**
  Enabled by setting GS.0 > 0. Starting from setpoint = PV (initial state), it reaches pre-heating set SP.0 with gradient GS.0
- **Maintenance phase**
  Enabled by setting Ht.0 > 0. Maintains pre-heating setpoint SP.0 for time Ht.0
- **Ramp 1 phase**
  Enabled by setting GS.1 > 0. Starting from pre-heating setpoint SP.0, it reaches active _SP set with gradient GS.1

In case of selftuning, the pre-heating function is not activated

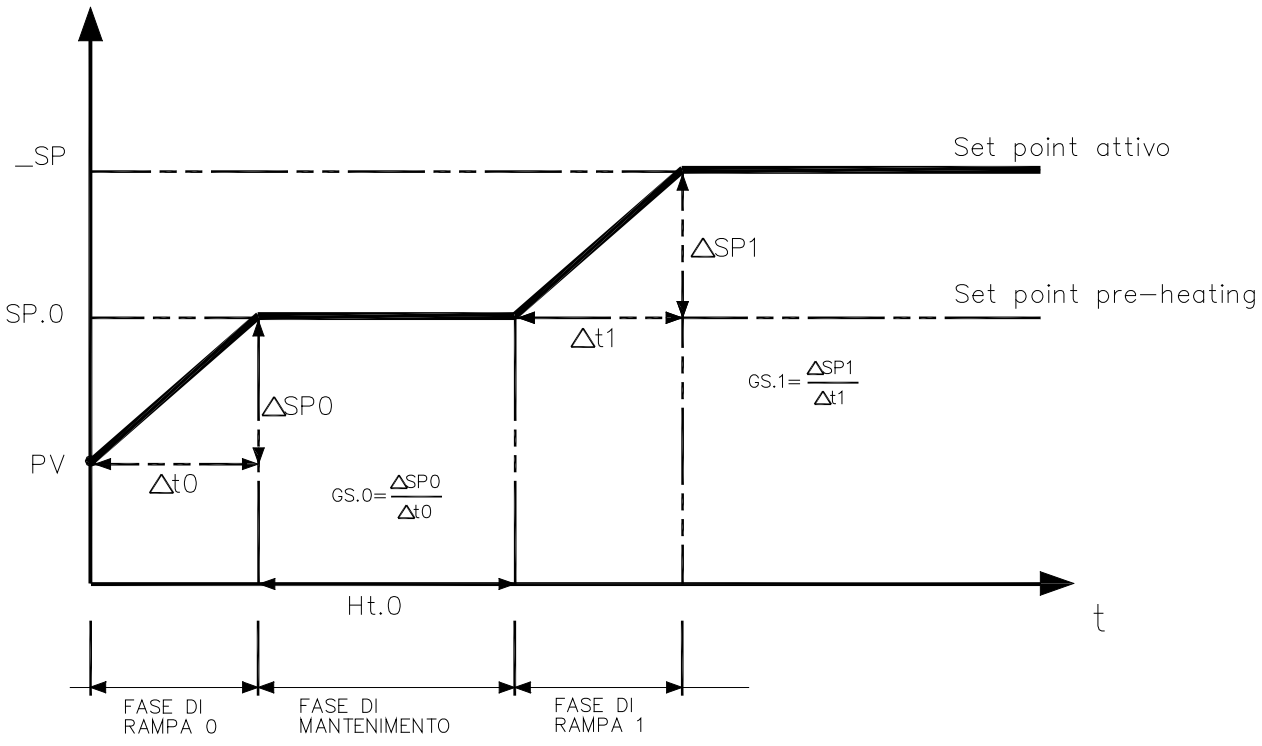

9 • ADJUSTMENT WITH MOTORIZED VALVE

In an adjustment process the adjustment valve has the function of varying fuel delivery (frequently corresponding to the thermal energy introduced into the process) in relation to the signal coming from the controller.
For this purpose it is provided with an actuator able to modify its opening value, overcoming the resistances produced by the fluid passing inside it.
The adjustment valves vary the delivery in a modulated manner, producing finite variations in the fluid passage inner area corresponding to finite variations of the actuator input signal, coming from the controller. The servomechanism, for example, comprises an electric motor, a reducer and a mechanical transmission system which actions the valve.
Various auxiliary components can be present such as the mechanical and electrical safety end travels, manual actioning systems.

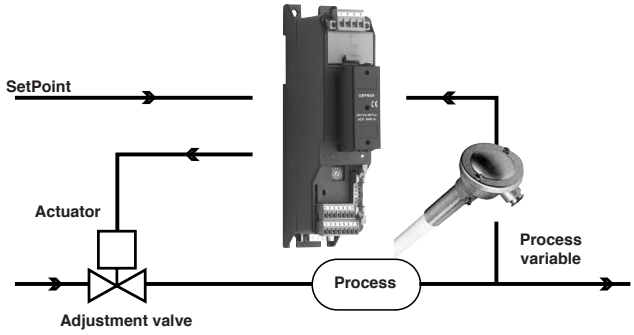

CONTROL EXAMPLE FOR V0 VALVE

The controller determines, on the basis of the dynamics of the process, the control output for the valve corresponding to the opening of the same in such a way so as to maintain the desired value of the process variable.

Characteristic parameters for valves control

- Actuator time (Ac.t) is the time employed by the valve to pass from entirely open to entirely closed (or vice-versa), and can be set with a resolution of one second. It is a mechanical feature of the valve+actuator unit.
NOTE: if the actuator's travel is mechanically limited it is necessary to proportionally reduce the Ac.t value.

- Minimum impulse (t.Lo) expressed as a % of the actuator time (resolution 0.1%).
Represents the minimum change in position corresponding to a minimum change in power supplied by the instrument below which the actuator will not physically respond to the command.
This represents the minimum variation in position due to which the actuator does not physically respond to the command.
The minimum duration of the movement can be set in t.Lo, expressed as a % of actuator time.
- Impulsive intervention threshold (t.Hi) expressed as a % of the actuator time (resolution 0.1%) represents the position displacement (requested position – real position) due to which the manoeuvre request becomes impulsive.

You can choose between 2 types of control:
1) ON time of movement = t.on and OFF time proportional to shift and greater than or equal to t.Lo (we recommend setting t.on = t.Lo) (set t.oF = 0).
2) ON time of movement = t.on and OFF time = t.oF. A value set for t.oF < t.on is forced to t.on. To activate this type, set t.oF < > 0.
The type of movement approach allows fine control of the reverse drive valve (from potentiometer or not), especially useful in cases of high mechanical inertia.
Set t.Hi = 0 to exclude modulation in positioning.
This type of modulated approach allows precise control of the feedback actioned valve, by a potentiometer or not, and is especially useful in cases of high mechanical inertia. Setting t.Hi = 0 excludes modulation in positioning.

- Dead zone(dE.b) is a displacement band between the adjustment setpoint and the process variable within which the controller does not supply any command to the valve (Open = OFF; Close = OFF). It is expressed as a percentage of the bottom scale and is positioned below the setpoint.
The dead zone is useful in an operative process to avoid straining the actuator with repeated commands and an insignificant effect on the adjustment. Setting dE.b = 0 the dead zone is excluded.

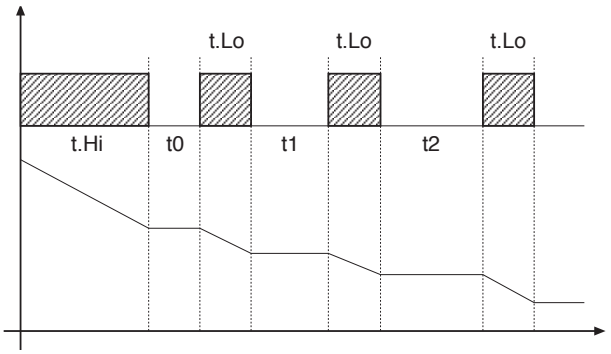

Graph of behavior inside the band with integral time ≠ 0.

With integral time = 0, movement ON time is always equal to OFF time.

t0 = t.Lo

Valve control modes

With the controller in manual, the setting of parameter At.y ≥ 8 allows direct control of the valve open and close commands through the keyboard Increments and Decrements on the front seats.

V0 - for floating valve without potentiometer

Model V0 have similar behaviour: every manoeuvre request greater than the minimum impulse t.Lo is sent to the actuator by means of the OPEN/CLOSE relays; every action updates the presumed position of the virtual potentiometer calculated on the basis of the actuator travel declared time.
In this way there is always a presumed position of the valve which is compared with the position request of the controller.
Having reached a presumed extreme position (entirely open or entirely closed determined by the “virtual potentiometer”) the controller provides a command in the same direction, in this way ensuring the real extreme position is reached (minimum command time = t.on).
The actuators are usually protected against the OPEN command in the entirely open position or CLOSE command in the entirely closed position.

V3 - for floating valve, PI control

When the difference between the position calculated by the controller and the only proportional component exceeds the value corresponding to the minimum impulse t.Lo the controller provides an OPEN or CLOSE command of the duration of the minimum impulse itself t.Lo.
At each delivery the integral component of the command is set to zero (discharge of the integral).
The frequency and duration of the impulses is correlated to the integral time (h.it or c.it).

Non-movement behavior
t.Hi = 0: with power = 100% or 0.0%, the corresponding open or close outputs always remain enabled (safety status).

Movement behavior
t.Hi < > 0: with position attained corresponding to 100% or 0.0%, the corresponding open or close outputs are switched off.

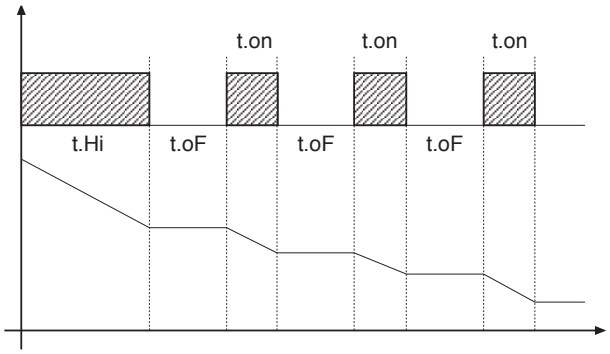

If t.oF = 0, current function is maintained.

If t.oF ≠ 0 movement mode will be as shown on the graph

10 • CONTROL ACTIONS

Proportional Action:
action in which contribution to output is proportional to deviation at input (deviation = difference between controlled variable and setpoint).
Derivative Action:
action in which contribution to output is proportional to rate of variation input deviation.
Integral Action:
action in which contribution to output is proportional to integral of time of input deviation.

Influence of Proportional, Derivative and Integral actions on response of process under control

* An increase in P.B. reduces oscillations but increases deviation.
* A reduction in P.B. reduces the deviation but provokes oscillations of the controlled variable (the system tends to be unstable if P.B. value is too low).
* An increase in Derivative Action corresponds to an increase in Derivative Time, reduces deviation and prevents oscillation up to a critical value of Derivative Time, beyond which deviation increases and prolonged oscillations occur.
* An increase in Integral Action corresponds to a reduction in Integral Time, and tends to eliminate deviation between the controlled variable and the setpoint when the system is running at rated speed.
If the Integral Time value is too long (Weak integral action), deviation between the controlled variable and the setpoint may persist.
Contact GEFRAN for more information on control actions.

11 • MANUAL TUNING

A) Enter the setpoint at its working value.
B) Set the proportional band at 0.1% (with on-off type setting).
C) Switch to automatic and observe the behavior of the variable. It will be similar to that in the figure:

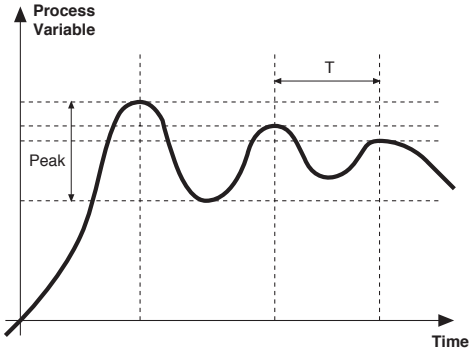

D) The PID parameters are calculated s follows: Proportional band

$$P.B.= \frac{Peak}{(V\ max - V\ min)} \times 100$$

(V max - V min) is the scale range.
Integral time: It = 1.5 x T
Derivative time: dt = It/4
E) Switch the unit to manual, set the calculated parameters. Return to PID action by setting the appropriate relay output cycle time, and switch back to Automatic.
F) If possible, to optimize parameters, change the setpoint and check temporary response. If an oscillation persists, increase the proportional band. If the response is too slow, reduce it.

12 • SET GRADIENT

SET GRADIENT: if set to ≠0, the setpoint is assumed equal to PV at power-on and auto/man switchover. With gradient set, it reaches the local setpoint. Every variation in setpoint is subject to a gradient.
The set gradient is inhibited at power-on when self-tuning is engaged.
If the set gradient is set to ≠0, it is active even with variations of the local setpoint.
The control setpoint reaches the set value at the speed defined by the gradient.

13 • SOFTWARE ON / OFF SWITCHING FUNCTION

How to switch the unit OFF: hold down the “F” and “Raise” keys simultaneously for 5 seconds to deactivate the unit, which will go to the OFF state while keeping the line supply connected and keeping the process value displayed. The SV display is OFF.
All outputs (alarms and controls) are OFF (logic level 0, relays de-energized) and all unit functions are disabled except the switch-on function and digital communication.
How to switch the unit ON: hold down the “F” key for 5 seconds and the unit will switch OFF to ON. If there is a power failure during the OFF state, the unit will remain in OFF state at the next power-up (ON/OFF state is memorized).
The function is normally enabled, but can be disabled by setting the parameter Prot = Prot +16.

14 • SELF-TUNING

The function works for single output systems (heating or cooling). The self-tuning action calculates optimum control parameter values during process startup. The variable (for example, temperature) must be that assumed at zero power (room temperature).
The controller supplies maximum power until an intermediate value between starting value and setpoint is reached, after which it zeros power.
PID parameters are calculated by measuring overshoot and the time needed to reach peak. When calculations are finished, the system disables automatically and the control proceeds until the setpoint is reached.

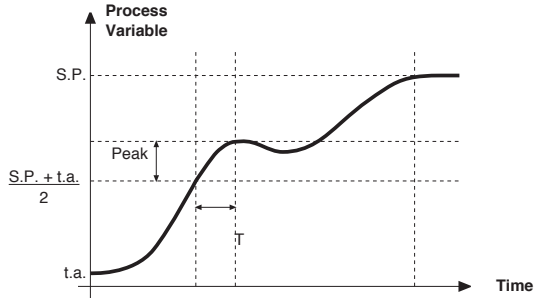

How to activate self-tuning:
A. Activation at power-on
1. Set the setpoint to the required value
2. Enable selftuning by setting the Stun parameter to 2 (CFG menu)
3. Turn off the instrument
4. Make sure the temperature is near room temperature
5. Turn on the instrument again

B. Activation from keyboard
1. Make sure that key M/A is enabled for Start/Stop selftuning (code but = 6 Hrd menu)
2. Bring the temperature near room temperature
3. Set the setpoint to the required value
4. Press key M/A to activate selftuning (Attention: selftuning interrupts if the key is pressed again)

The procedure runs automatically until finished, when the new PID parameters are stored: proportional band, integral and derivative times calculated for the active action (heating or cooling). In case of double action (heating or cooling), parameters for the opposite action are calculated by maintaining the initial ratio between parameters (ex.: CPb = HPb * K; where K = CPb / HPb when self-tuning starts). When finished, the Stun code is automatically cancelled.

Notes :
-The procedure does not start if the temperature is higher than the setpoint (heating control mode) or if the temperature is lower than the setpoint (cooling control mode). In this case , the Stu code is not cancelled.
-It is advisable to eneable one of the configurable LEDs to signal selftuning status.By setting one of parameters
LED1, LED2, LED3=4 or 20 on the Hrd menu, the respective LED will be on or flashing when selftuning is active.

15 • ACCESSORIES

• Interface for instrument configuration

KIT PC USB / RS485 o TTL

Kit for PC via the USB port (Windows environment) for GEFRAN instruments configuration:
Lets you read or write all of the parameters
• A single software for all models
• Easy and rapid configuration
• Saving and management of parameter recipes
• On-line trend and saving of historical data
Component Kit:
- Connection cable PC USB ... port TTL
- Connection cable PC USB ... RS485 port
- Serial line converter
- CD SW GF Express installation

• ORDERING CODE

GF_eXK-2-0-0	cod F049095

16 • ORDER CODE

600V [R] [R] [R] [-]

UTPUT 1	
Relay	R

UTPUT 2	
Relay	R

UTPUT 3	
Relay	R

POWER SUPPLY	
0	11...27Vac/dc
1	100...240Vac

• WARNINGS

WARNING: this symbol indicates danger. It is placed near the power supply circuit and near high-voltage relay contacts.

Read the following warnings before installing, connecting or using the device:

• follow instructions precisely when connecting the device.
• always use cables that are suitable for the voltage and current levels indicated in the technical specifications.
• the device has no ON/OFF switch: it switches on immediately when power is turned on. For safety reasons, devices permanently connected to the power supply require a two-phase disconnecting switch with proper marking. Such switch must be located near the device and must be easily reachable by the user. A single switch can control several units.
• if the device is connected to electrically NON-ISOLATED equipment (e.g. thermocouples), a grounding wire must be applied to assure that this connection is not made directly through the machine structure.
• if the device is used in applications where there is risk of injury to persons and/or damage to machines or materials, it MUST be used with auxiliary alarm units. You should be able to check the correct operation of such units during normal operation of the device.
• before using the device, the user must check that all device parameters are correctly set in order to avoid injury to persons and/or damage to property.
• the device must NOT be used in infiammable or explosive environments. It may be connected to units operating in such environments only by means of suitable interfaces in conformity to local safety regulations.
• the device contains components that are sensitive to static electrical discharges. Therefore, take appropriate precautions when handling electronic circuit boards in order to prevent permanent damage to these components.

***Installation*:** installation category II, pollution level 2, double isolation
The equipment is intended for permanent indoor installations within their own enclosure or panel mounted enclosing the rear housing and exposed terminals on the back.
• only for low power supply: supply from Class 2 or low voltage limited energy source
• power supply lines must be separated from device input and output lines; always check that the supply voltage matches the voltage indicated on the device label.
• install the instrumentation separately from the relays and power switching devices
• do not install high-power remote switches, contactors, relays, thyristor power units (particularly if “phase angle” type), motors, etc... in the same cabinet.
• avoid dust, humidity, corrosive gases and heat sources.
• do not close the ventilation holes; working temperature must be in the range of 0...50°C.
• surrounding air: 50°C
• use 60/75°C copper (Cu) conductor only, wire size range 2x No 22 - 14AWG, Solid/Stranded
• use terminal tightening torque 0.5N m
If the device has faston terminals, they must be protected and isolated; if the device has screw terminals, wires should be attached at least in pairs.
• *Power*: supplied from a disconnecting switch with fuse for the device section; path of wires from switch to devices should be as straight as possible; the same supply should not be used to power relays, contactors, solenoid valves, etc.; if the voltage waveform is strongly distorted by thyristor switching units or by electric motors, it is recommended that an isolation transformer be used only for the devices, connecting the screen to ground; it is important for the electrical system to have a good ground connection; voltage between neutral and ground must not exceed 1V and resistance must be less than 6Ohm; if the supply voltage is highly variable, use a voltage stabilizer for the device; use line filters in the vicinity of high frequency generators or arc welders; power supply lines must be separated from device input and output lines; always check that the supply voltage matches the voltage indicated on the device label.
• *Input and output connections*: external connected circuits must have double insulation; to connect analog inputs (TC, RTD) you have to: physically separate input wiring from power supply wiring, from output wiring, and from power connections; use twisted and screened cables, with screen connected to ground at only one point; to connect adjustment and alarm outputs (contactors, solenoid valves, motors, fans, etc.), install RC groups (resistor and capacitor in series) in parallel with inductive loads that work in AC *(Note: all capacitors must conform to VDE standards (class x2) and support at least 220 VAC. Resistors must be at least 2W)*; fit a 1N4007 diode in parallel with the coil of inductive loads that operate in DC.

GEFRAN spa will not be held liable for any injury to persons and/or damage to property deriving from tampering, from any incorrect or erroneous use, or from any use not conforming to the device specifications.

Set-up for 600V RRR0-1-T73 regulator

Set up for temperature probe Pt100 (ex Siemens QAE2120 130°C max.)

The regulator comes out of the factory preset with the corresponding values of the Siemens RWF40.000 and RWF50.2x

Verify wiring of the sensor

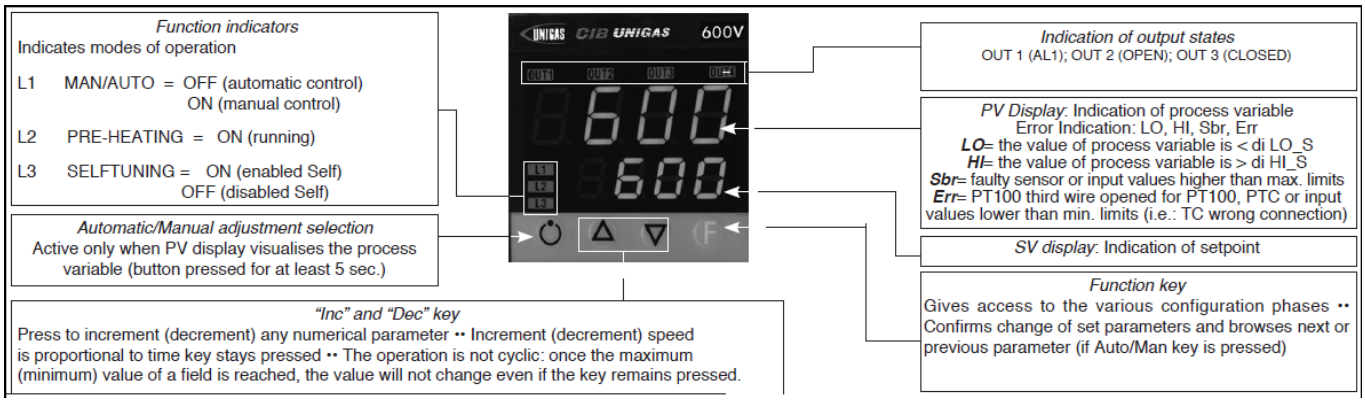

Regulation of the set-point **= 80**
It can be modified by using arrows "up" and "down".
By pushing **F** you go to parameters:

Hy.P	5 (hysteresis positive for output 1, terminals 21-22 (ex Q13-Q14)
Hy.n	-5 hysteresis negative for output ,1 terminals 21-22 (ex Q13-Q14)

Keep pushing **F** until you see **PASS**, release **F** and through the arrows set **99**, push **F** and visualize **Pro** (protection code) default is **12**, through the arrows set **128** and push **F,** keep it pushed until all parameters **InF**, **CFG**, **InP**, **Out**, **PASS** are visualized.

CFG	
S.tun	0
hPb	1,2
hIt	5,83
hdt	1,33
…	

InP	
….	
tyP	30 (Pt100)
…	
dP_S	1 (decimals num.)
Lo.S	0 (min. sensor scale)
Hi.S	850,0 (max sensor scale)
oFS	0 (offset of input correction)
Lo.L	30,0 (lower set-point range limit)
Hi.L	130,0 (upper set-point range limit)

Out	
A1.r	0
…	
A1.t	3 (operating mode AL1 =inverse-relative-normal)
…	
rL.1	2 (AL1)
rL.2	18 (open)
rL.3	19 (close)
rEL	0
A.ty	9 (type of servocontrol command)
Ac.t	12 (servocontrol running time: SQN72.4…/STA12..=12; SQM40.265=30)
t_Lo	2
t_Hi	0.0
t.on	2
t.oF	0.0
dE.b	0,1 (dead zone in % of end scale)

PAS	99 then push and keep pushed **F** until visualization of **Hrd**
Hrd	
…	
CtrL	6 (PID warm)
AL.nr	1
but	1
diSP	0
Ld.1	1
Ld.2	28
Ld.3	20

Keep pushed **F** until you visualize **PASS**, release **F** and through the arrows set **99**, push **F** and visualize **Pro** (protection code) from **128**, through the arrows, bring it back to **12,** and keep **F** pushed until you come back to set-point value.

Manual operation :
Keep pushed the lower left key for at least 5 sec.
The instrument will enter the "MAN" mode (see also "Ld1" switching on).
Through the arrows, "Open" and "Close" outputs are activated.
To come back to normal working keep the lower left key pushed for at least 5 sec.

Software switch off :
By keeping pushed keys **Arrow up** + **F** for more than 5 sec. the instrument switches off the software, does not command the outputs and visualize only the variable of process measured by the probe.
To restore keep pushed **F** for more than 5 sec.

Set up for temperature probe Pt100 for high temperature (350°C max.)

Verify wiring of the sensor

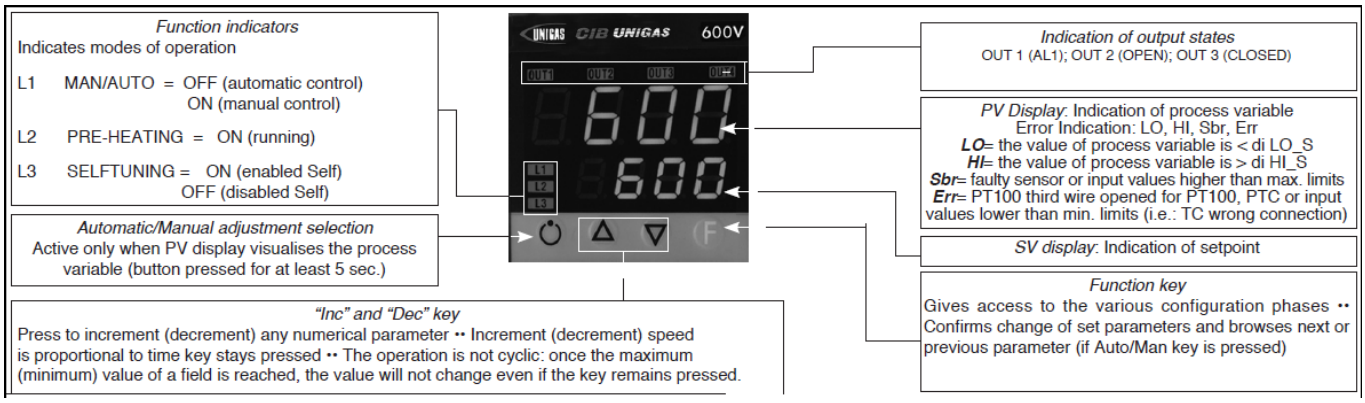

Regulation of the set-point = **80**
It can be modified by using arrows "up" and "down".
By pushing **F** you go to parameters:

Hy.P	10 (hysteresis positive for output 1 terminals 21-22 (ex Q13-Q14)
Hy.n	-5 (hysteresis negative for output 1 terminals 21-22 (ex Q13-Q14)

Keep pushing **F** until you see **PASS**, release **F** and through the arrows set **99**, push **F** and visualize **Pro** (protection code) default is **12**, through the arrows set **128** and push **F,** keep it pushed until all parameters **InF**, **CFG**, **InP**, **Out**, **PASS** are visualized.

CFG	
S.tun	0
hPb	1,2
hIt	5,83
hdt	1,33
…	

InP	
….	
tyP	30 (Pt100)
…	
dP_S	1 (decimals num.)
Lo.S	0 (min. sensor scale)
Hi.S	850,0 (max sensor scale)
oFS	0 (offset of input correction)
Lo.L	0,0 (lower set-point range limit)
Hi.L	350,0 (upper set-point range limit)

Out	
A1.r	0
…	
A1.t	3 (mode AL1 =inverse-relative-normal)
…	
rL.1	2 (AL1)
rL.2	18 (open)
rL.3	19 (close)
rEL	0
A.ty	9 (type of servocontrol command)
Ac.t	12 (servocontrol running time: SQN72.4…/STA12..=12; SQM40.265=30)
t_Lo	2
t_Hi	0.0
t.on	2
t.oF	0.0
dE.b	0,1 (dead zone in % of end scale)

PAS	99 then push and keep pushed **F** until visualization of **Hrd**
Hrd	
…	
CtrL	6 (PID warm)
AL.nr	1
but	1
diSP	0
Ld.1	1
Ld.2	28
Ld.3	20

Keep pushed **F** until you visualize **PASS**, release **F** and through the arrows set **99**, push **F** and visualize **Pro** (protection code) from **128**, through the arrows, bring it back to **12,** and keep **F** pushed until you come back to set-point value.

Manual operation:
Keep pushed the lower left key for at least 5 sec.
The instrument will enter the "MAN" mode (see also "Ld1" switching on).
Through the arrows, "Open" and "Close" outputs are activated.
To come back to normal working keep the lower left key pushed for at least 5 sec.

Software switch off :
By keeping pushed keys **Arrow up** + **F** for more than 5 sec. the instrument switches off the software, does not command the outputs and visualize only the variable of process measured by the probe.
To restore keep pushed **F** for more than 5 sec.

Set up for pressure transmitter 2 wires signal 4÷20mA

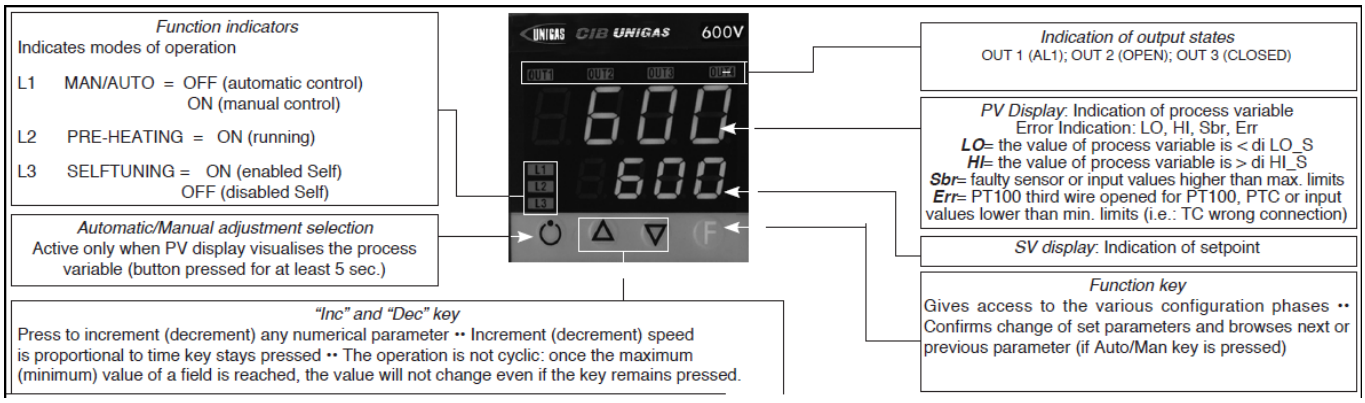

With pressure transmitters first we need to enable their power supply: remove the part as shown below, then, on the CPU unit, move the bridge from Pt100 to +Vt

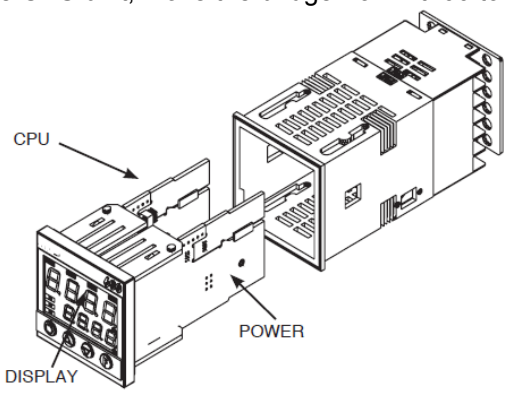

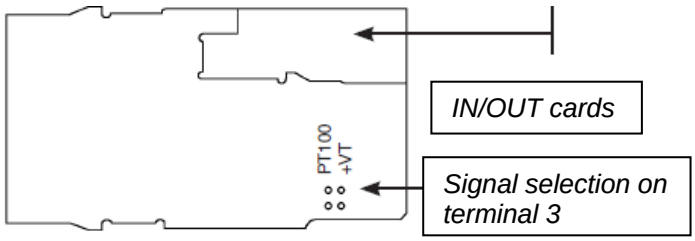

Verify wiring of the sensor

Impostazione set-point

Transmitter	**1,6bar**	**3bar**	**10bar**	**16bar**	**25bar**	**40bar**
Set-point	1bar	1,5bar	6bar	6bar	6bar	6bar

To modify it directly use "up" and "down" arrows.
By pushing **F** you go to parameter:

Transmitter	**1,6bar**	**3bar**	**10bar**	**16bar**	**25bar**	**40bar**
Hy.P	0,2bar	0,5bar	0,5bar	0,8bar	1,25bar	2bar
Hy.n	0bar	0bar	0bar	0bar	0bar	0bar

Keep pushing **F** until you see **PASS**, release **F** and through the arrows set **99**, push **F** and visualize **Pro** (protection code) default is **12**, through the arrows set **128** and push **F,** keep it pushed until all parameters **InF**, **CFG**, **InP**, **Out**, **PASS** are visualized.

CFG	
S.tun	0
hPb	5
hIt	1,33
hdt	0,33
…	

InP	
….	
tyP	44 (4÷20mA)
…	
dP_S	2 (decimals num.)

Transmitter	**1,6bar**	**3bar**	**10bar**	**16bar**	**25bar**	**40bar**	
Lo.S	0,00	0,00	0,00	0,00	0,00	0,00	min. sensor scale
Hi.S	1,60	3,00	10,00	16,00	25,00	40,00	max sensor scale
oFS	0	0	0	0	0	0	offset of input correction
Lo.L	0,00	0,00	0,00	0,00	0,00	0,00	lower set-point setting
Hi.L	1,60	3,00	10,00	16,00	25,00	40,00	upper set-point setting

Out	
A1.r	0
…	
A1.t	3 (mode AL1 =inverse-relative-normal)
…	
rL.1	2 (AL1)
rL.2	18 (open)
rL.3	19 (close)
rEL	0
A.ty	9 (type of servocontrol command)
Ac.t	12 (servocontrol running time: SQN72.4…/STA12..=12; SQM40.265=30)
t_Lo	2
t_Hi	0.0
t.on	2
t.oF	0.0
dE.b	0,1 (dead zone in % of end scale)

PAS	99 then push and keep pushed **F** until visualization of **Hrd**
Hrd	
…	
CtrL	6 (PID warm)
AL.nr	1
but	1
diSP	0
Ld.1	1
Ld.2	28
Ld.3	20

Keep pushed **F** until you visualize **PASS**, release **F** and through the arrows set **99**, push **F** and visualize **Pro** (protection code) from **128**, through the arrows, bring it back to **12,** and keep **F** pushed until you come back to set-point value.

Manual operation:
Keep pushed the lower left key for at least 5 sec.
The instrument will enter the "MAN" mode (see also "Ld1" switching on).
Through the arrows, "Open" and "Close" outputs are activated.
To come back to normal working keep the lower left key pushed for at least 5 sec.

Software switch off :
By keeping pushed keys **Arrow up** + **F** for more than 5 sec. the instrument switches off the software, does not command the outputs and visualize only the variable of process measured by the probe.
To restore keep pushed **F** for more than 5 sec.

Set -up for thermocouples type **K** or **J**

Verify wiring of the sensor

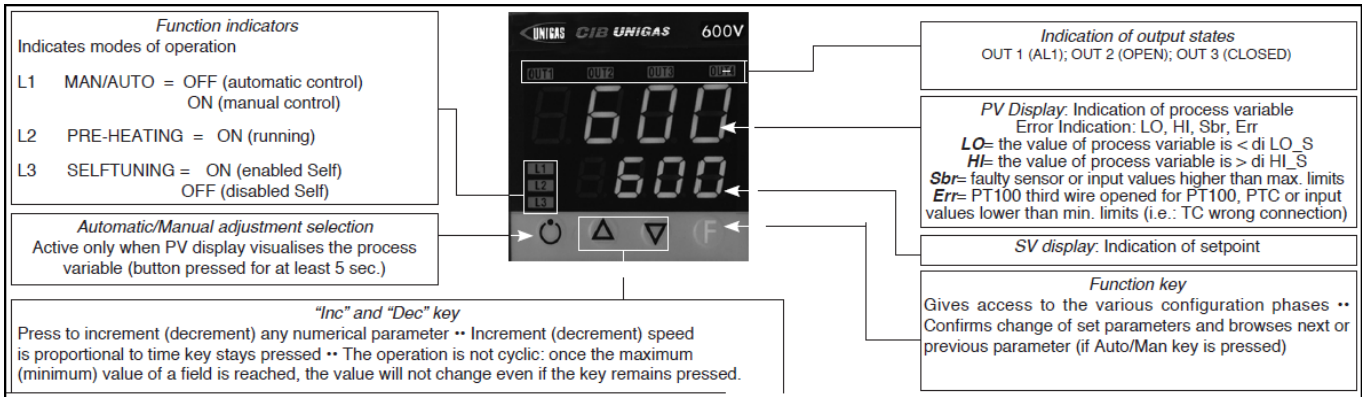

Regulation of the set-point = **80**
It can be modified by using arrows "up" and "down".
By pushing **F** you go to parameters:

Hy.P	10 (hysteresis positive for output 1 terminals 21-22 (ex Q13-Q14)
Hy.n	-5 (hysteresis negative for output 1 terminals 21-22 (ex Q13-Q14)

Keep pushing **F** until you see **PASS**, release **F** and through the arrows set **99**, push **F** and visualize **Pro** (protection code) default is **12**, through the arrows set **128** and push **F,** keep it pushed until all parameters **InF**, **CFG**, **InP**, **Out**, **PASS** are visualized.

CFG	
S.tun	0
hPb	1,2
hIt	5,83
hdt	1,33
…	

InP	
….	
tyP	2 (thermocouple **K** 0÷1300°C) / 0 (thermocouple **J** 0÷1000°C)
…	
dP_S	0 (no decimal) / 1 (1 decimal)
Lo.S	0 (min. sensor scale)
Hi.S	1300 (max sensor scale for tc **K**) / 1000 (max sensor scale for tc **J**)
oFS	0 (offset of input correction)
Lo.L	0 (lower set-point range limit)
Hi.L	1300 (upper set-point range limit) per tc **K** / 1000 for tc **J**

Out	
A1.r	0
…	
A1.t	3 (mode AL1 =inverse-relative-normal)
…	
rL.1	2 (AL1)
rL.2	18 (open)
rL.3	19 (close)
rEL	0
A.ty	9 (type of servocontrol command)
Ac.t	12 (servocontrol running time: SQN72.4…/STA12..=12; SQM40.265=30)
t_Lo	2
t_Hi	0.0
t.on	2
t.oF	0.0
dE.b	0,1 (dead zone in % of end scale)

PAS	99 then push and keep pushed **F** until visualization of **Hrd**
Hrd	
…	
CtrL	6 (PID warm)
AL.nr	1
but	1
diSP	0
Ld.1	1
Ld.2	28
Ld.3	20

Keep pushed **F** until you visualize **PASS**, release **F** and through the arrows set **99**, push **F** and visualize **Pro** (protection code) from **128**, through the arrows, bring it back to **12,** and keep **F** pushed until you come back to set-point value.

Manual operation:
Keep pushed the lower left key for at least 5 sec.
The instrument will enter the "MAN" mode (see also "Ld1" switching on).
Through the arrows, "Open" and "Close" outputs are activated.
To come back to normal working keep the lower left key pushed for at least 5 sec.

Software switch off :
By keeping pushed keys **Arrow up** + **F** for more than 5 sec. the instrument switches off the software, does not command the outputs and visualize only the variable of process measured by the probe.
To restore keep pushed **F** for more than 5 sec.

RWF50.2x & RWF50.3x

User manual

M12922CB Rel.1.0 07/2012

DEVICE INSTALLATION

Install the device using the relevant tools as shown in the figure.
To wire the device and sensors, follow the instructions on the burner wiring diagram.

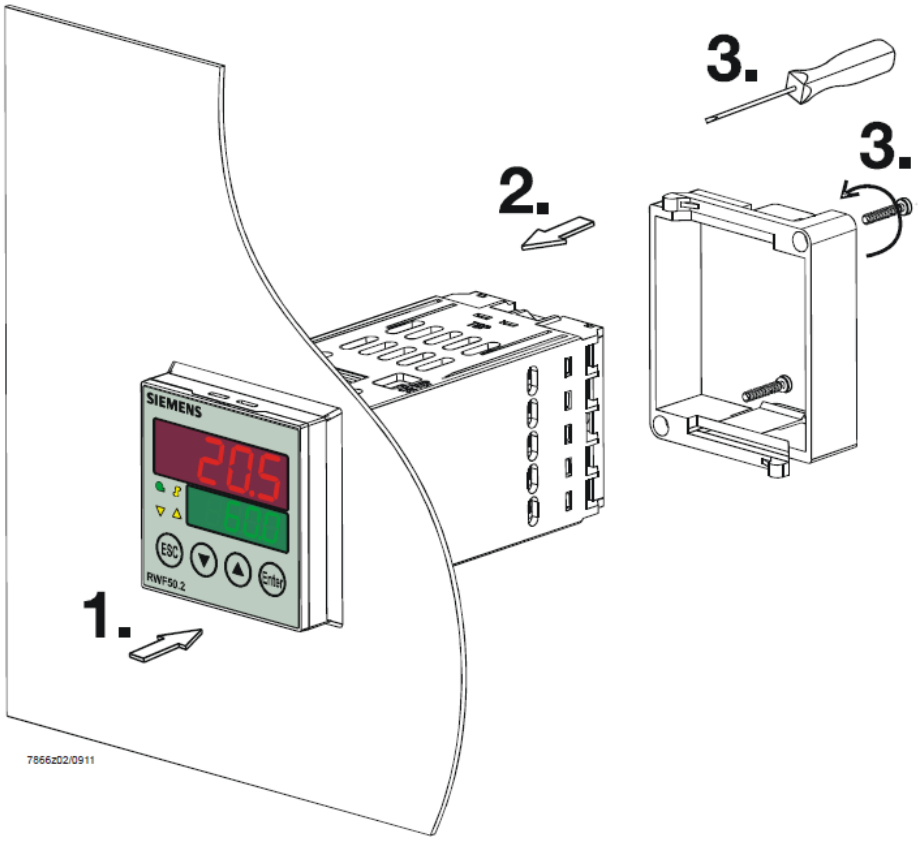

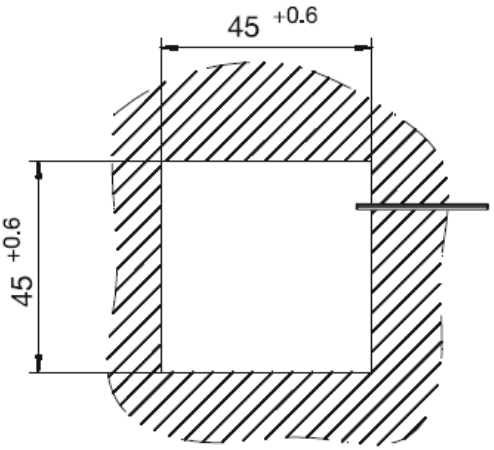

FRONT PANEL

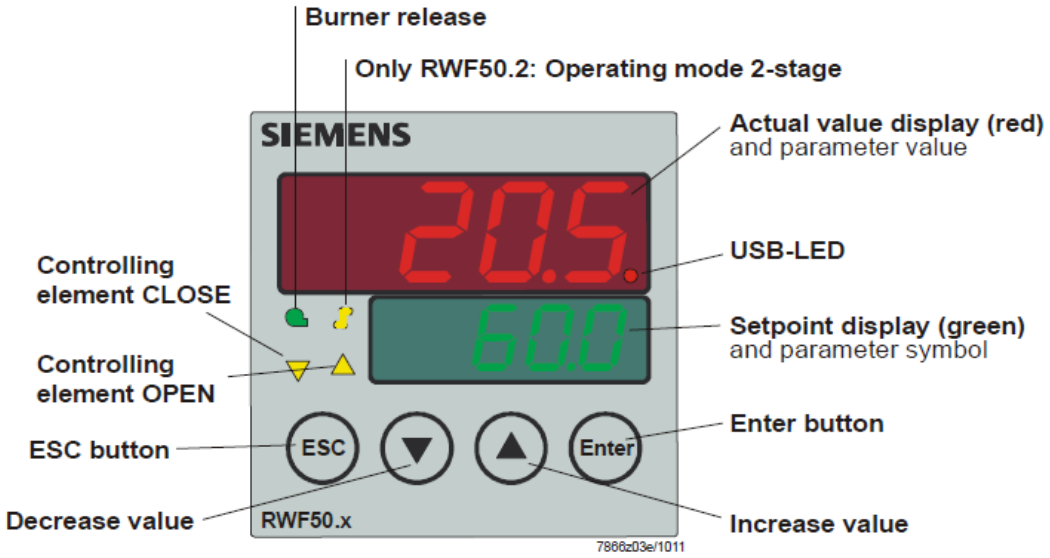

NAVIGATION MENU

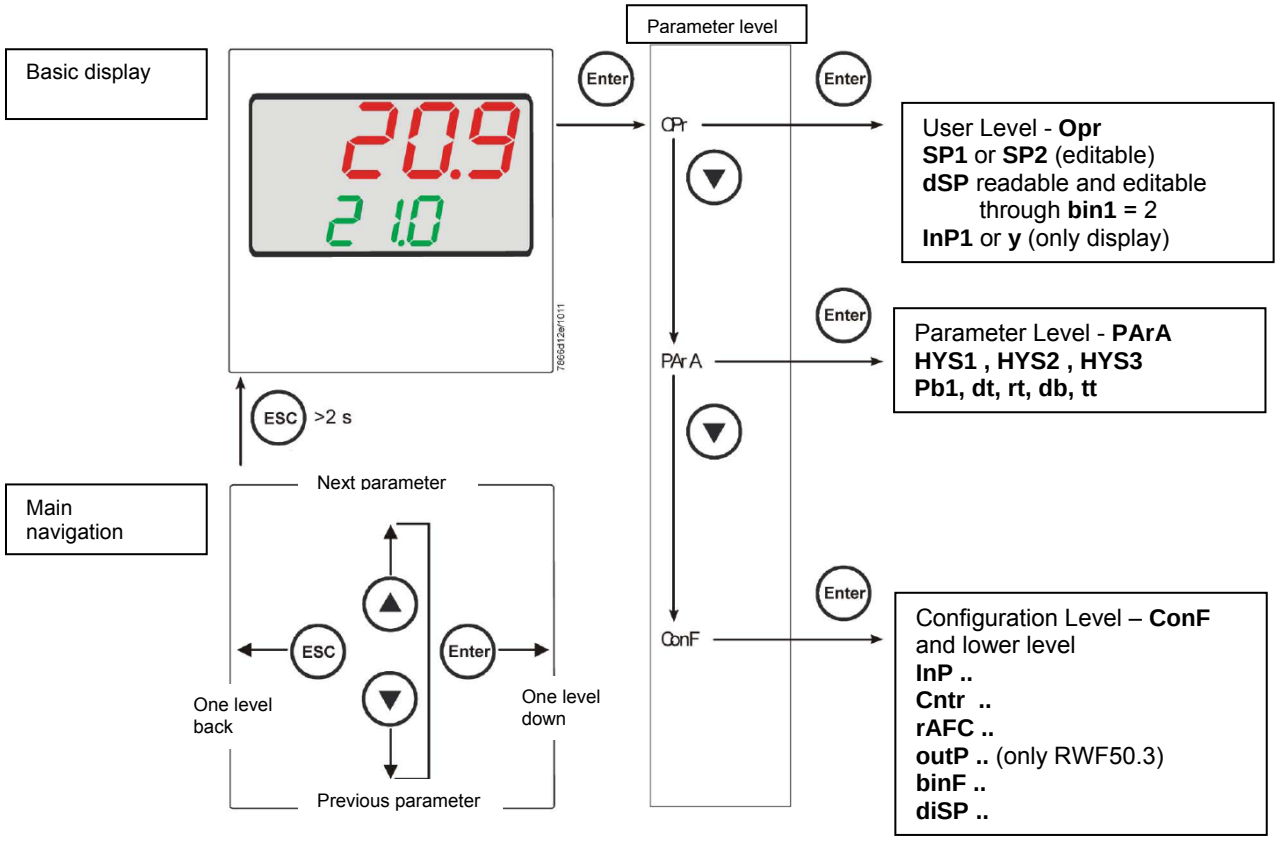

RWF5 is preset good for 90% of applications. However, you can set or edit parameters as follow:

Set-point: set or modification:
When the burner is in stand-by, (safety loop open, that is terminals 3-4/T1-T2 on the 7 pole plug open) push the **Enter** button: on the lower display (green) **Opr** appears; push **Enter** again and in the same display **SP1** appears. Push **Enter** again and the lower display (green **SP1**) flashes. Using the **up and down arrows** change the set-point on the upper display (red).Push **Enter** to confirm and push **ESC** more times to get the home position.

PID parameters set and modifications (see table below):

- Push **Enter** button, on the green display **Opr** appears; using the **down arrow,** scroll until group **PArA** is reached and push **Enter**.
- on the green display **Pb1** e appears and on the red one the set parameter.
- Push is sequence the **down or up** arrow the menu is scrolled.
- Push **Enter** to select and the **arrows** to choose the desired value. **Enter** to confirm.

Parameter	Display	Range	Factory setting	Remarks
Proportional band	PB.1	1… 9999 digit	10	Typical value for temperature
Derivative action	dt	0… 9999 sec.	80	Typical value for temperature
Integral action	rt	0… 9999 sec.	350	Typical value for temperature
Dead band (*)	db	0… 999,9 digit	1	Typical value
Servocontrol running time	tt	10… 3000 sec.	15	Set servocontrol running time
Switch-on differential (*)	HYS1	0,0… -1999 digit	-5	Value under setpoint below which the burner switches back on (1N-1P closes)
Switch-off differential 2° stage (*)	HYS2	0,0 … HYS3	3	(enable only with parameter **bin1** = 4)
Upper switch-off differential (*)	HYS3	0,0… 9999 digit	5	Value over setpoint above which the burner switches off (1N-1P opens)
Switch-on differential on cooling controller (*)	HYS4	0,0… 9999 digit	5	Do not used (enable only with parameter **CACt** = 0)
Switch-off differential 2° stage on cooling controller (*)	HYS5	HYS6…0,0 digit	5	Do not used (enable only with parameters **CACt** = 0 and **bin1** = 4)
Upper switch-off differential on cooling controller (*)	HYS6	0,0… -1999 digit	5	Do not used (enable only with parameter **CACt** = 0)
Delay modulation	q	0,0… 999,9 digit	0	Do not alter

(*)Parameters affected by setting of decimal place (**ConF > dISP** parameter **dECP**)

Setting the kind of sensor to be connected to the device:

- push the **Enter** button: on the lower display (green) **Opr** appears. Using the **up and down arrows** find **ConF.** Push **Enter** to confirm.
- Now on the green display the group **InP** appears. Push **Enter** and **InP1** is displaied. Enter to confirm.
- You are inside **InP1**; the green display shows **Sen1 (sensor type)**, while the red display shows the chosen sensor code
- Push **Enter** to enter the **Sen1** parameter, then choose the desired sensor using the **arrows.** Push **Enter** to confirm and **ESC** to escape.
- Once selected the sensor, you can modify all the other parameters using **up and down arrows** according to the tables here below.

ConF > InP >InP1

Parameter	Value	Description
SEn1 type of sensor for analog input 1	**1**	**Pt100 3 fili**
	2	Pt100 2 fili
	3	Pt1000 3 fili
	4	Pt1000 2 fili
	5	Ni1000 3 fili
	6	Ni1000 2 fili
	7	0 ÷ 135 ohm
	15	0 ÷ 20mA
	16	4 ÷ 20mA
	17	0 ÷ 10V
	18	0 ÷ 5V
	19	1 ÷ 5V
OFF1 sensor offset	-1999..**0**.. +9999	Using the measured value correction (offset), a measured value can be corrected to a certain degree, either up or down
SCL1 scale low level	-1999..**0**.. +9999	In the case of a measuring transducer with standard signal, the physical signal is assigned a display value here (for input ohm, mA, V)
SCH1 scale high level	-1999..**100**.. +9999	In the case of a measuring transducer with standard signal, the physical signal is assigned a display value here (for input ohm, mA, V)
dF1 digital filter	0…**0,6**…100	Is used to adapt the digital 2nd order input filter (time in s; 0 s = filter off)
Unit temperature unit	**1** 2	**1 = degrees Celsius** 2 = degrees Fahrenheit

(**bold** = factory settings)

Remark:
RWF50.2 e RWF50.3 cannot be connected to thermocouples.
If thermocouples have to be connected, convert the signal to a 4-20 mA one and set the RWF accordingly.

ConF > Cntr

Parameter	Value	Description
CtYP controller type	**1** 2	**1 = 3-position controller (open-stop-close only RWF50.2)** 2 = continuative action controller (only RWF50.3)
CACt control action	**1** 0	**1 = heating controller** 0 = cooling controller
SPL least value of the set-point range	-1999..**0**..+9999	set-point limitation prevents entry of values outside the defined range
SPH maximum value of the set-point range	-1999..**100**..+9999	set-point limitation prevents entry of values outside the defined range
oLLo set-point limitation start, operation limit low	**-1999**.... +9999	lower working range limit
oLHi set-point limitation end, operation limit high	-1999.... **+9999**	upper working range limit

(**bold** = factory settings)

ConF > rAFC

Activation boiler shock termic protetion:
RWF50.. can activate the thermal shock protection only on sites where the set-point is lower than 250°C and according to **rAL** parameter.

Parameter	Value	Description
FnCT function	**0** 1 2	Choose type of range degrees/time **0 = deactivated** 1 = Kelvin degrees/minute 2 = Kelvin degrees/hour
rASL ramp rate	**0,0 …** 999,9	Slope of thermal shock protection (only with functions 1 and 2)
toLP tolerance band ramp	**0**…9999	width of tolerance band (in K) about the set-point **0 = tolerance band inactive** 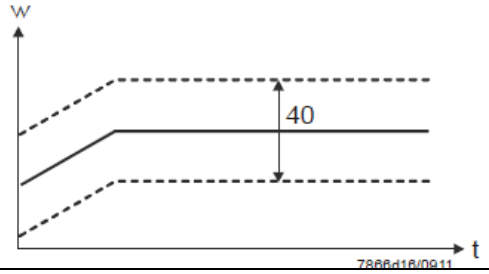
rAL ramp limit	**0**…250	Ramp limit. When this value is lower than the temperature set-point, the RWF controls the output increasing the temp set point step by step according to rASL. If this is over the temp set point, the control is performed in cooling.

(**bold** = factory settings)

ConF > OutP (parameter under group only for RWF50.3)

Parameter	Value	Description
FnCt tipo di controllo	 1 **4**	1 = analog input 1 doubling with possibility to convert (depending on par **SiGn**) **4 = modulation controller**
SiGn type of output signal	 **0** 1 2	physical output signal (terminals A+, A-) **0 = 0÷20mA** 1 = 4÷20mA 2 = 0÷10V
rOut Value when out of input range	 **0**…101	 signal (in percent) when measurement range is crossed
oPnt zero point	 -1999…**0**..+9999	value range of the output variable is assigned to a physical output signal Per default, the setting corresponds to 0...100% angular positioning for the controller outputs (terminals A+, A-) (effective only with **FnCt** = 1)
End End value	 -1999…**100**..+9999	value range of the output variable is assigned to a physical output signal Per default, the setting corresponds to 0...100% angular positioning for the controller outputs (terminals A+, A-) (effective only with **FnCt** = 1)

(**bold** = factory settings)

ConF > binF

Parameter	Value	Description
bin1 digital inputs (terminals DG - D1)	 **0** 1 2 4	**0 = without function** 1 = set-point changeover (SP1 / SP2) 2 = set-point shift (**Opr** > **dSP** parameter = value of set-point modify) 4 = changeover of operating mode open – modulating operation; close – 2 stage operation.

(**bold** = factory settings)

ConF > dISP

Parameter	Value	Description
diSU upper display (red)	 0 **1** 4 6 7	display value for upper display: 0 = display power-off **1 = analog input value** 4 = Controller's angular positioning 6 = set-point value 7 = end value with thermal shock protection
diSL lower display (green)	 0 1 4 **6** 7	display value for lower display: 0 = display power-off 1 = analog input value 4 = Controller's angular positioning **6 = set-point value** 7 = end value with thermal shock protection
tout timeout	 0..**180**..250	time (s) on completion of which the controller returns automatically to the basic display, if no button is pressed
dECP decimal point	**0** 1 2	**0 = no decimal place** 1 = one decimal place 2 = two decimal places
CodE level lockout	**0** 1 2 3	**0 = no lockout** 1 = configuration level lockout (ConF) 2 = Parameter and configuration level lockout (PArA & ConF) 3 = keyboard lockout

(**bold** = factory settings)

Manual control :

- in order to manual change the burner load, while firing keep pushing the **ESC** button for more than 5 s; on the lower green display **Hand** appears.
- using the **UP** and **DOWN** arrows, the load varies.
- Keep pushing the **ESC** button for getting the normal operation again.
- **NB:** every ime the device shuts the burner down (start led switched off - contact 1N-1P open), the manual control is not active.

Device self-setting (auto-tuning):

If the burner in the steady state does not respond properly to heat generator requests, you can activate the Device's self-setting function, which recalculates PID values for its operation, deciding which are most suitable for the specific kind of request

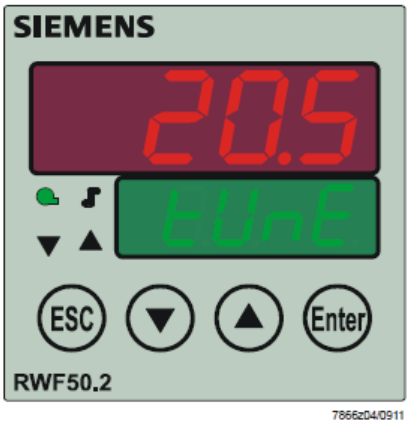

Follow the below instructions:
push the **UP** and **DOWN** arrows for more than 5 s; on the green lower display **TUNE** appears. Now the device pushes the burner to increase and decrease its output. During this time, the device calculates PID parameters (**Pb1, dt** and **rt**). After the calculations, the TUNE is automatically deactivated and the device has already stored them.
In order to stop the Auto-tuning function while it works, push again the **UP** and **DOWN** arrows for more than 5 s. The calculated PID parameters can be manually modified following the previously described instructions.

Display of software version :

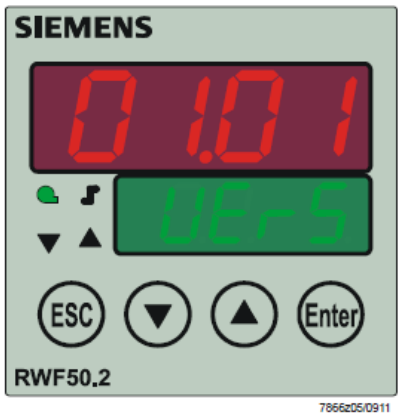

The software version is shown by pushing **Enter + UP arrow** on the upper display

Electric connection :

With 7 pins connector version

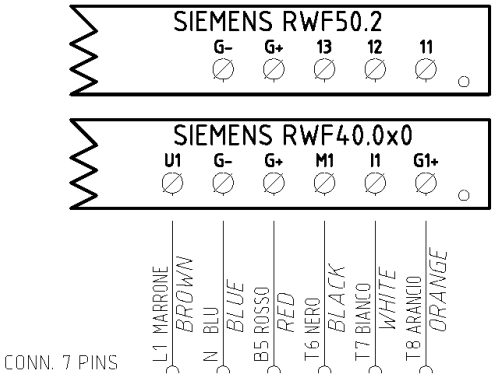

With terminals version

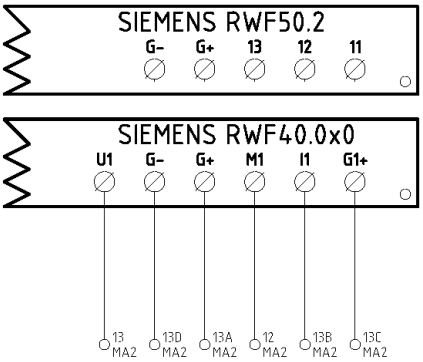

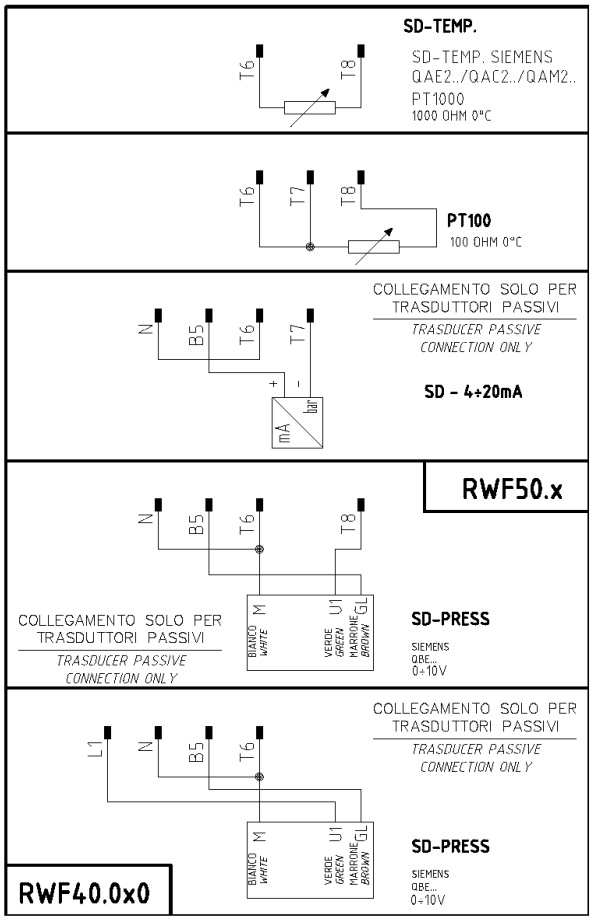

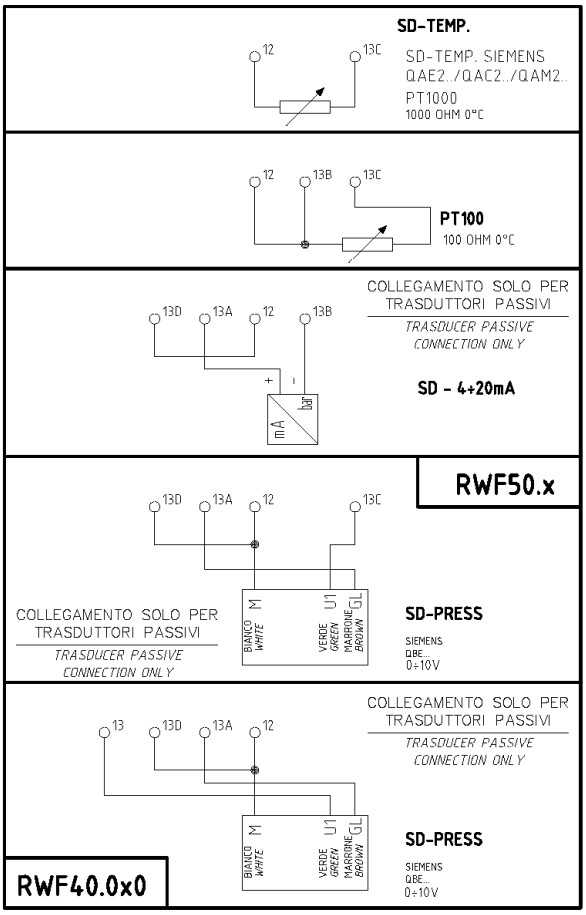

Matches terminals between RWF50.2 and RWF40.0x0

Parameters summarising for RWF50.2x:

Navigation menù / Types of probe	Conf					Conf			PArA						Opr
	Inp					Cntr		diSP							
	Inp1														
	SEn1	OFF1	SCL1	SCH1	Unit	SPL	SPH	dECP	Pb. 1	dt	rt	tt	HYS1 (*)	HYS3 (*)	SP1 (*)
Siemens QAE2120…	6	0	needless	needless	1	30	95	1	10	80	350	(#)	-5	5	80 °C
Siemens QAM2120..	6	0	needless	needless	1	0	80	1	10	80	350	(#)	-2,5	2,5	40°C
Pt1000 (130°C max.)	4	0	needless	needless	1	30	95	1	10	80	350	(#)	-5	5	80°C
Pt1000 (350°C max.)	4	0	needless	needless	1	0	350	1	10	80	350	(#)	-5	10	80°C
Pt100 (130°C max.)	1	0	needless	needless	1	0	95	1	10	80	350	(#)	-5	5	80°C
Pt100 (350°C max)	1	0	needless	needless	1	0	350	1	10	80	350	(#)	-5	10	80°C
Probe 4÷20mA / 0÷1,6bar	16	0	0	160	needless	0	160	0	5	20	80	(#)	0	20	100 kPa
Probe 4÷20mA / 0÷3bar	16	0	0	300	needless	0	300	0	5	20	80	(#)	0	20	200 kPa
Probe 4÷20mA / 0÷10bar	16	0	0	1000	needless	0	1000	0	5	20	80	(#)	0	50	600 kPa
Probe 4÷20mA / 0÷16bar	16	0	0	1600	needless	0	1600	0	5	20	80	(#)	0	80	600 kPa
Probe 4÷20mA / 0÷25bar	16	0	0	2500	needless	0	2500	0	5	20	80	(#)	0	125	600 kPa
Probe 4÷20mA / 0÷40bar	16	0	0	4000	needless	0	4000	0	5	20	80	(#)	0	200	600 kPa
Siemens QBE2002 P4	17	0	0	400	needless	0	400	0	5	20	80	(#)	0	20	200 kPa
Siemens QBE2002 P10	17	0	0	1000	needless	0	1000	0	5	20	80	(#)	0	50	600 kPa
Siemens QBE2002 P16	17	0	0	1600	needless	0	1600	0	5	20	80	(#)	0	80	600 kPa
Siemens QBE2002 P25	17	0	0	2500	needless	0	2500	0	5	20	80	(#)	0	125	600 kPa
Siemens QBE2002 P40	17	0	0	4000	needless	0	4000	0	5	20	80	(#)	0	200	600 kPa
Segnale 0÷10V	17	0	to be fixed	to be fixed	needless	to be fixed	to be fixed	to be fixed	5	20	80	(#)	to be fixed	to be fixed	to be fixed
Segnale 4÷20mA	16	0	to be fixed	to be fixed	needless	to be fixed	to be fixed	to be fixed	5	20	80	(#)	to be fixed	to be fixed	to be fixed

NOTE :
(#) tt – servo control run time
SQL33 ; STM30; SQM10; SQM40; SQM50; SQM54 = **30** (secondi) - STA12B3.41; SQN30.251; SQN72.4A4A20 = **12** (secondi)
(*)These values are factory set - values **must be** set during operation at the plant based on the real working temperature/pressure value.
WARNING : With pressure probes the parameters SP1, SCH, SCL, HYS1, HYS3 must be selected, and visualized in kPa (kilo Pascal). (1bar = 100.000Pa = 100kPa)

APPENDIX: PROBES CONNECTION

To assure the utmost comfort, the control system needs reliable information, which can be obtained provided the sensors have been installed correctly. Sensors measure and transmit all variations encountered at their location.

Measurement is taken based on design features (time constant) and according to specific operating conditions.With wiring run in raceways, the sheath (or pipe) containing the wires must be plugged at the sensor's terminal board so that currents of air cannot affect the sensor's measurements.

Ambient probes (or ambient thermostats)

Installation

The sensors (or room thermostats) must be located in

reference rooms in a position where they can take real temperature measurements without being affected by

foreign factors.

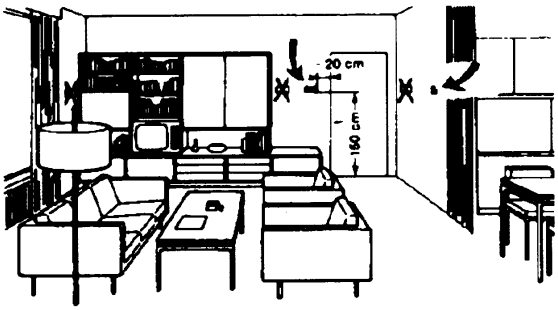

Outside probes (weather)

Installation

In heating or air-conditioning systems featuring adjustment in response to outside temperature, the sensor's positioning is of paramount importance.

It's good to be admired …even better to be effective

Heating systems: the room sensor must not be installed in rooms with heating units complete with thermostatic valves. Avoid all sources of heat foreign to the system.

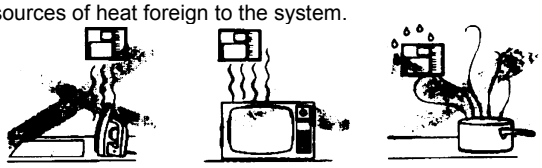

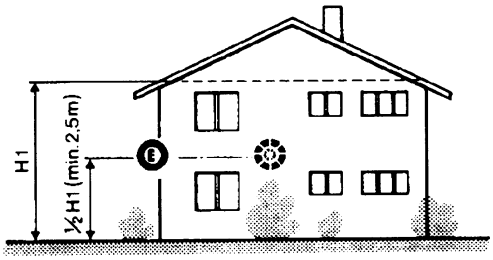

General rule: on the outer wall of the building where the living rooms are, never on the south-facing wall or in a position where they will be affected by morning sun. If in any doubt, place them on the north or north-east façade.

Location

On an inner wall on the other side of the room to heating unitsheight above floor 1.5 m, at least 1.5 m away from external sources of heat (or cold).

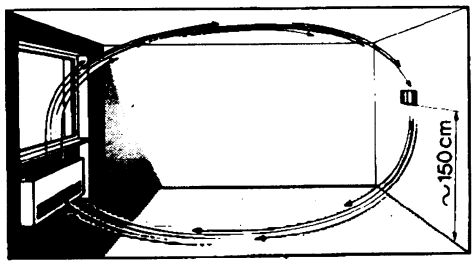

Positions to be avoided

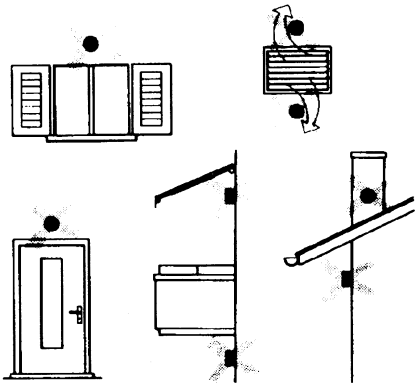

Installation position to be avoided

near shelving or alcoves and recesses, near doors or win-dows, inside outer walls exposed to solar radiation or currents of cold air, on inner walls with heating system pipes, domestic hot water pipes, or cooling system pipes running through them.

Avoid installing near windows, vents, outside the boiler room, on chimney breasts or where they are protected by balconies, cantilever roofs.

The sensor must not be painted (measurement error).

Duct or pipe sensors

Installing temperature sensors

For measuring outlet air:

- after delivery fan or
- after coil to be controlled, at a distance of at least 0,5 m

For measuring room temperature:

- before return air intake fan and near room's return airintake. For measuring saturation temperature: after mist eliminator.

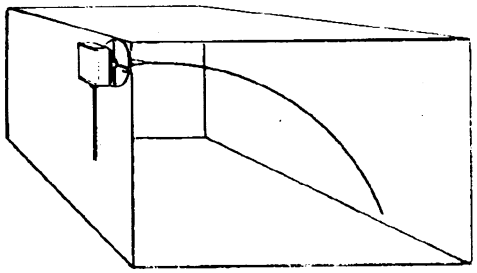

Bend 0.4m sensor by hand (never use tools) as illustrated.

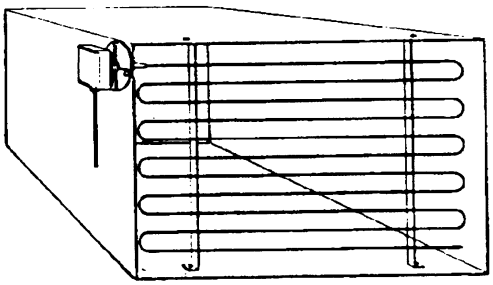

Use whole cross-section of duct, min. distance from walls 50 mm, radius of curvature 10 mm for 2m or 6m sensors.

Installing combined humidity sensors

As max. humidity limit sensor on outlet (steam humidifiers).

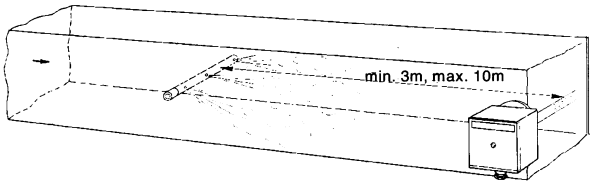

Installing pressure sensors

A - installation on ducts carrying fluids at max. temperature 80°C

B - installation on ducts at temperature over 80°C and for refrigerants

C - installation on ducts at high temperatures:

- increase length of siphon
- place sensor at side to prevent it being hit by hot air coming from the pipe.

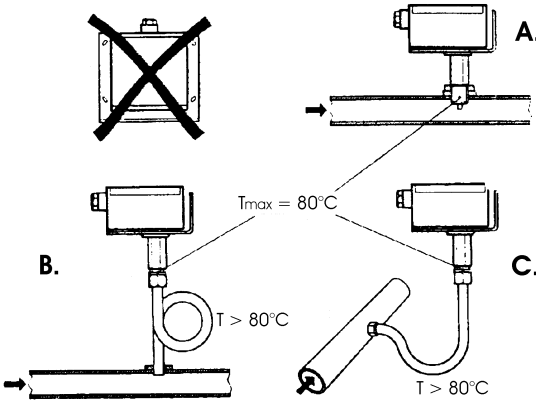

Installing differential pressure sensors for water

- Installation with casing facing down not allowed.-With temperature over 80°C, siphons are needed.
- To avoid damaging the sensor, you must comply with the following instructions

when installing:

- make sure pressure difference is not greater than thevalue permitted by the sensor
- when there are high static pressures, make sure you insert shutoff valves A-B-C.

Putting into operation

Start disable

1=open C1=open C

2=open A2=close B

3=open B3=close A

4= close C

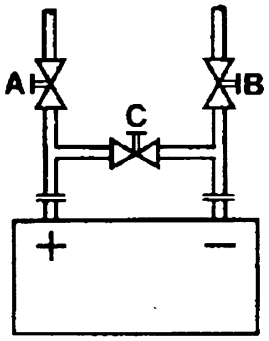

Immersion or strap-on sensors

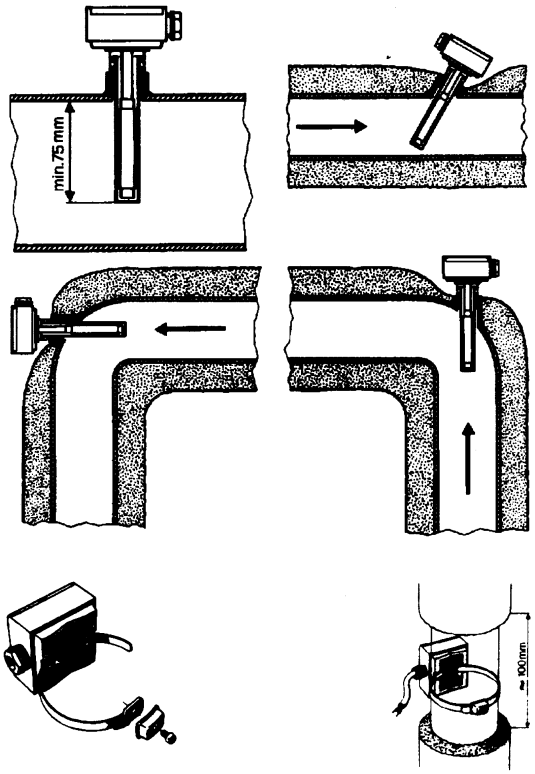

Placing the probes (QAD22.../QAE21.../QAP21.../RCA...)

With pumps on outlet

with 3 ways valves / with 4 ways valves

Panel system / burner control

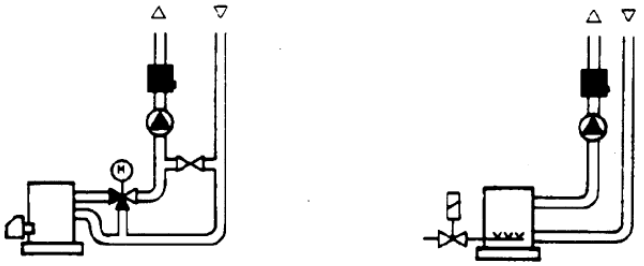

With pumps on return

with 3 ways valves / with 4 ways valves

Immersion probes installation

Sensors must be installed on the stretch of pipe in which fluid circulates all the time.

The rigid stem (sensing element doing the measuring) must be inserted by at least 75mm and must face the direction of flow.

Recommended locations: on a bend or on a straight stretch of pipe but tilted by 45° and against the flow of fluid.

Protect them to prevent water from infiltrating (dripping gates, condensation from pipes etc.)

Installing QAD2.. strap-on sensors

Make sure fluid is circulating in the chosen location.

Eliminate insulation and paintwork (including rust inhibitor) on a min. 100mm length of pipe.

Sensors come with straps for pipes up to 100 mm in diameter

Strap-on or immersion sensors?

QAD2.. strap-on sensors

Advantages :

- 10 sec. time constant
- Installed with system running (no plumbing work)
- Installation can be changed easily if it proves incorrect.

Limits:

- Suitable for pipe diameters max. 100 mm
- Can be affected by currents of air etc.

QAE2... immersion sensors

Advantages:

- Measure "mean" fluid temperature
- No external influence on measurement such as: currents of air, nearby pipes etc.

Limits:

- Time constant with sheath: 20 sec.
- Hard to change installation position if it proves incorrect.

Installing differential pressure probes for air

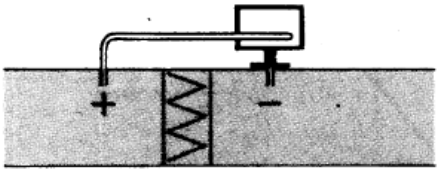

A - Control a filter (clogging)

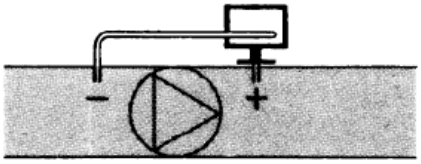

B - Control a fan (upstream/downstream)

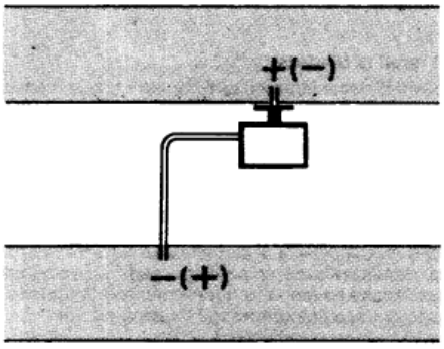

C - Measurement of difference in pressure between two ducts

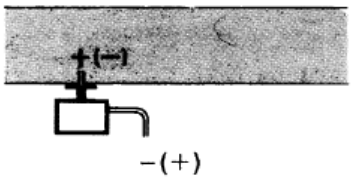

D - Measurement of difference in pressure between two rooms or of inside of duct and outside

Basic principles

Measuring static pressure(i.e. pressure exerted by air on pipe walls)

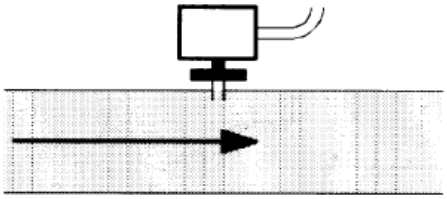

Measuring dinamic pressure

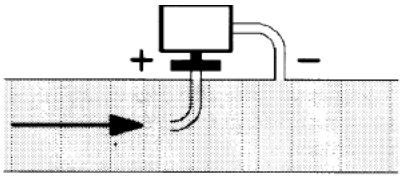

$$Pd = \frac{y\,\vartheta^2}{2g}$$

Key

y	Kg/m^3, specific weight of air
□	m/s, air speed
g	9.81 m/s^2 gravity acceleration
Pd	mm C.A., dynamic pressure

Measuring total pressure

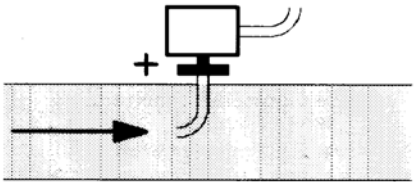

Spare parts

Description	Code
Modulator RWF50.2 (uscita a 3 punti - apri, fermo, chiudi)	2570148
Modulator RWF50.3 (uscita continua 0÷20mA, 4÷20mA, 0÷10V)	2570149
Temperature probe Siemens QAE2120.010A (30÷130°C)	2560101
Temperature probe Siemens QAM2120.040 (-15÷+50°C)	2560135
Thermoresistor Pt1000 ø6mm L100mm (30÷130°C)	2560188
Thermoresistor Pt1000 ø10mm L200mm (0÷350°C)	2560103
Thermoresistor Pt100 ø10mm L200mm (0÷350°C)	2560145
Thermoresistor Pt100 ø8mm L85mm (0÷120°C)	25601C3
Pressure probe Siemens QBE2.. P4 (0÷4bar)	2560159
Pressure probe Siemens QBE2.. P10 (0÷10bar / signal 0÷10V)	2560160
Pressure probe Siemens QBE2.. P16 (0÷16bar / signal 0÷10V)	2560167
Pressure probe Siemens QBE2.. P25 (0÷25bar / signal 0÷10V)	2560161
Pressure probe Siemens QBE2.. P40 (0÷40bar / signal 0÷10V)	2560162
Pressure probe Danfoss MBS 3200 P 1,6 (0÷1,6bar / signal 4÷20mA)	2560189
Pressure probe Danfoss MBS 3200 P 10 (0÷10bar / signal 4÷20mA)	2560190
Pressure probe Danfoss MBS 3200 P 16 (0÷16bar / signal 4÷20mA)	2560191
Pressure probe Danfoss MBS 3200 P 25 (0÷25bar / signal 4÷20mA)	2560192
Pressure probe Danfoss MBS 3200 P 40 (0÷40bar / signal 4÷20mA)	2560193
Pressure probe Siemens 7MF1565-3BB00-1AA1 (0÷1,6bar / signal 4÷20mA)	25601A3
Pressure probe Siemens 7MF1565-3CA00-1AA1 (0÷10bar / signal 4÷20mA)	25601A4
Sonda di pressione Siemens 7MF1565-3CB00-1AA1 (0÷16bar / signal	25601A5
Pressure probe Siemens 7MF1565-3CD00-1AA1 (0÷25bar / signal 4÷20mA)	25601A6
Pressure probe Siemens 7MF1565-3CE00-1AA1 (0÷40bar / signal 4÷20mA)	25601A7
Pressure probe Gefran E3E B1V6 MV (0÷1,6bar / segnale 4÷20mA)	25601C4
Pressure probe Danfoss E3E B01D MV (0÷10bar / segnale 4÷20mA)	25601C5
Pressure probe Danfoss E3E B16U MV (0÷16bar / segnale 4÷20mA)	25601C6
Pressure probe Danfoss E3E B25U MV (0÷25bar / segnale 4÷20mA)	25601C7
Pressure probe Danfoss E3E B04D MV (0÷40bar / segnale 4÷20mA))	25601C8

Note: Specifications and data subject to change. Errors and omissions excepted.

KM3 Modulator

USER MANUAL

M12927CA Rel.1.0 10/2020

MOUNTING

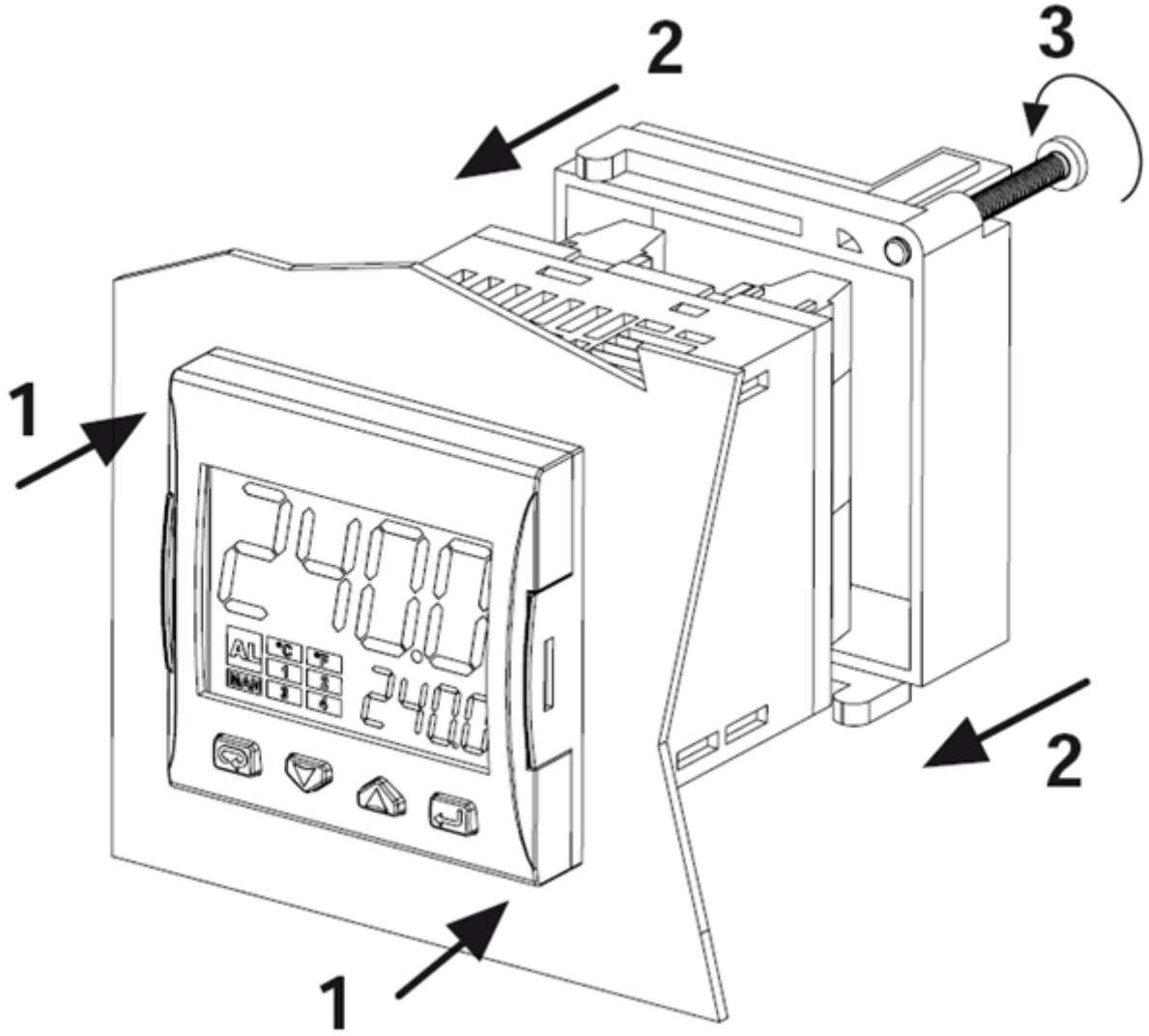

DISPLAY AND KEYS

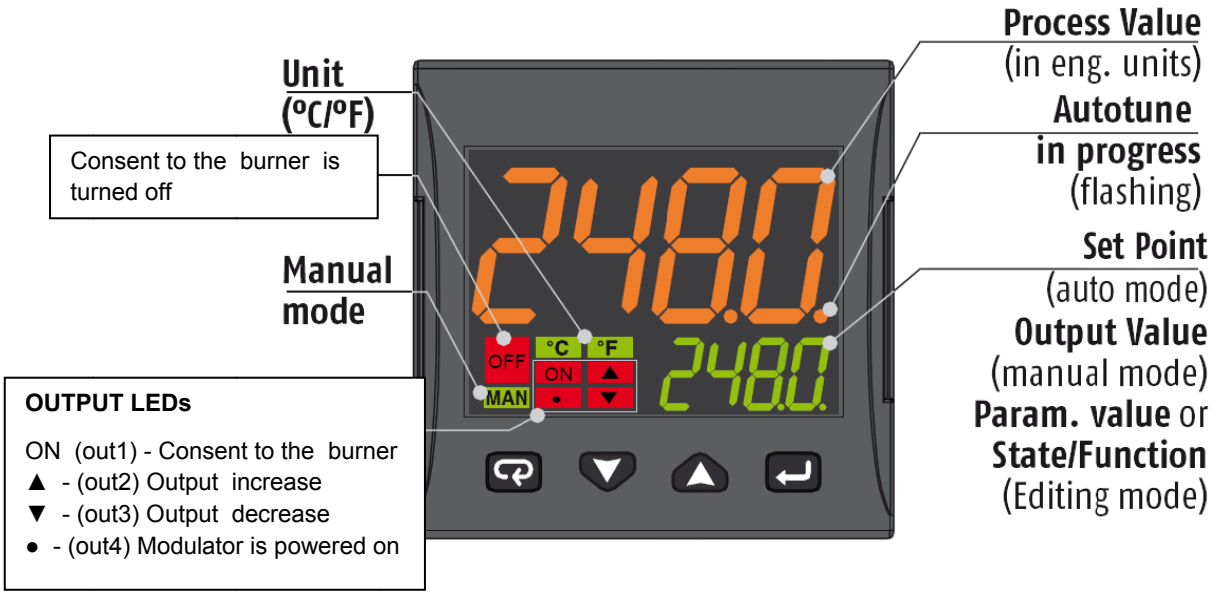

	Operator Mode	Editing Mode
	Access to: - Operator Commands (Timer, Setpoint selection ...) - Parameters - Configuration	Confirm and go to Next parameter
	Access to: - Operator additional information (Output value, running time ...)	Increase the displayed value or select the next element of the parameters list
	Access to: - Set Point	Decrease the displayed value or select the previous element
	Programmable key: Start the programmed function (Autotune, Auto/Man, Timer ...)	Exit from Operator commands/Parameter setting/Configuration

CONNECTIONS DIAGRAM

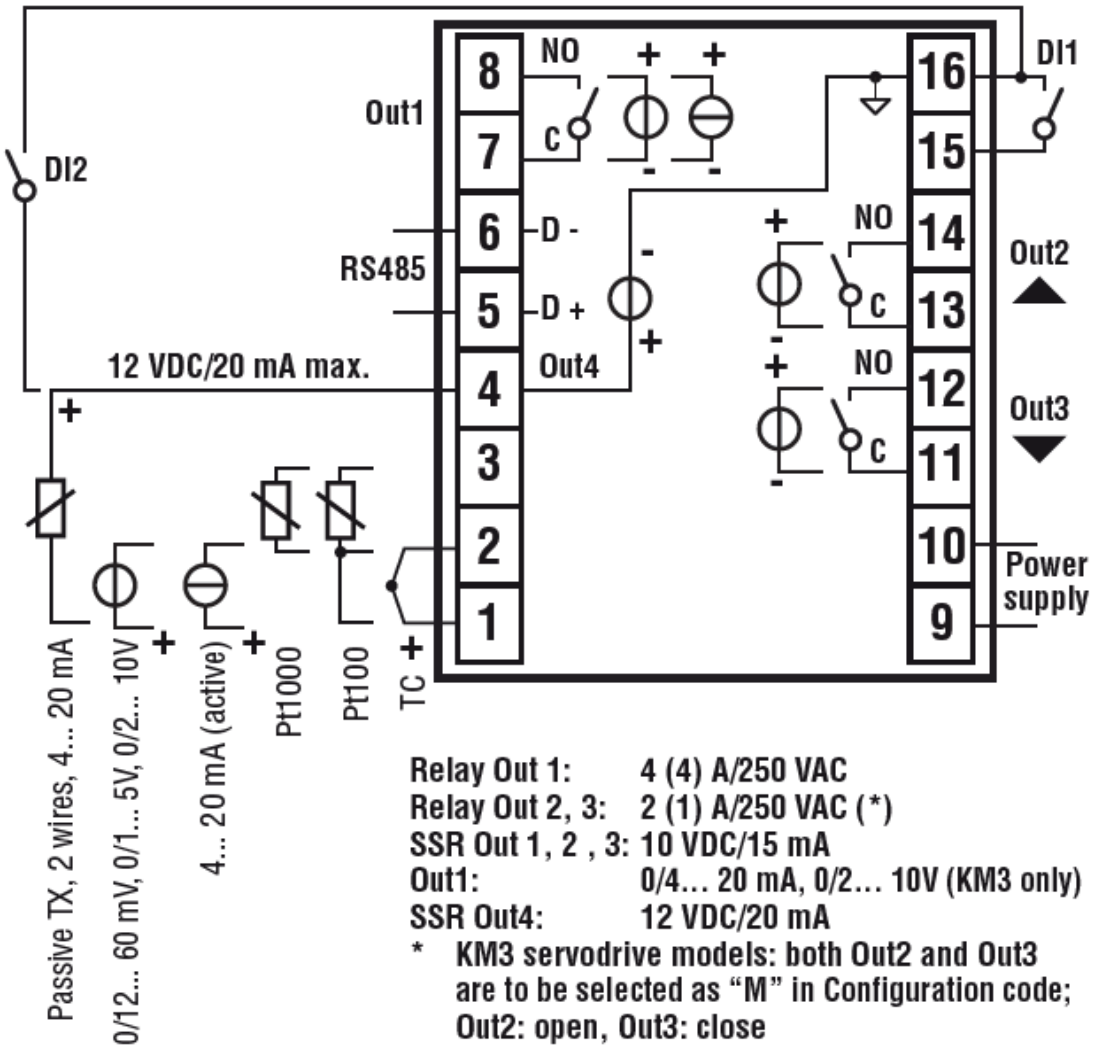

Probe connection:

- **PT1000/NTC/PTC**: between terminal 3 and 2
- **PT 100**: between terminal 3 and 2 with terminal 1
- **Passive pressure probe** 0/4-20 mA: between terminal 4 (+) e 1 (-)
  Note: out4 must be activated (IO4F must be setted to ON)
- **Powered pressure probe** 0/4-20 mA between terminal 4 (power supply), 2 (negative) e 1 (positive)
  Note: set IO4F to ON to activate Out4

Power supply connection:

- **Neutral wire:** terminal 9
- **Phase:** terminal 10 (100…240 Vac)
- Close terminals 15-16 to switch to the set point 2

Output connection:

- **Channel 1:** terminal 7 and 8 (burner on – off)
- **Channel 2:** terminal 11 and 12 (servomotor opens)
- **Channel 3:** terminal 13 and 14 (servomotor closes)

SETPOINT AND HYSTERESIS CONFIGURATION (SP, AL1, HAL1 parameters)

Push the ↵ button to enter into the setpoint configuration:

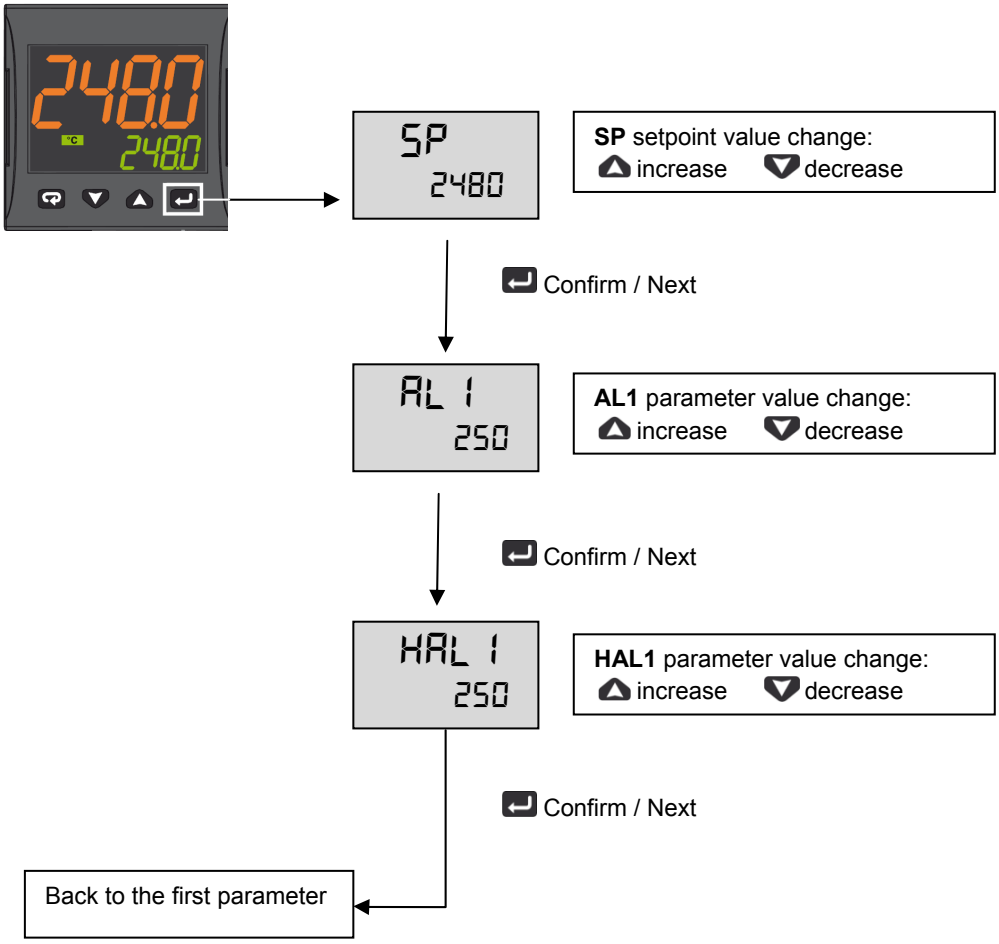

To return to normal mode, press the ↩ key for 3 seconds or wait the 10s timeout

Operation example

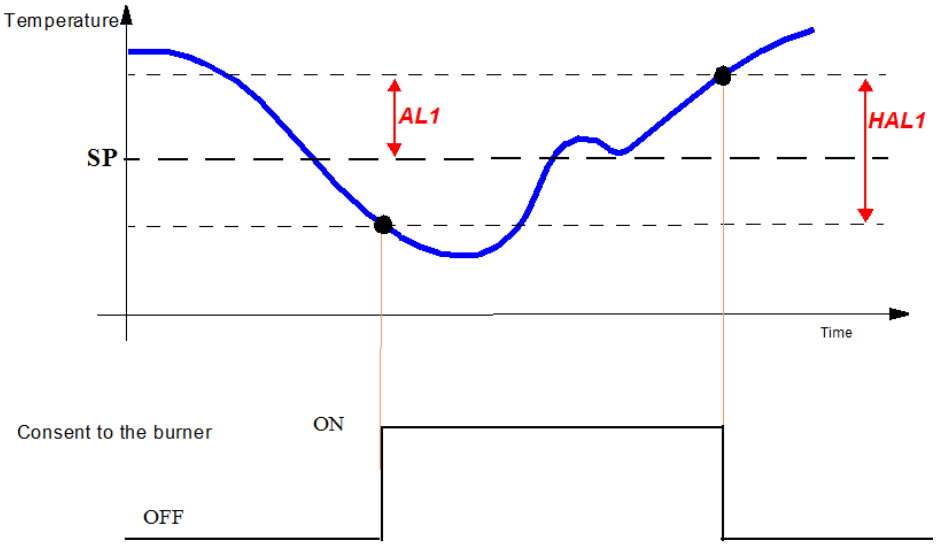

LIMITED ACCESS LEVEL

Proceed as follows to change some parameters that are not visible in standard user mode:

Press the ↵ key for 3 seconds

Password = 20

Access to parameter:

▲	Increase the displayed value
▼	Decrease the displayed value
↵	Confirm and go to next parameter

Param	Description	Values	Default
SEnS	Input type	Pt1 = RTD Pt100 Pt10 = RTD Pt1000 0.20 = 0..20mA 4.20 = 4..20mA Pressure probe 0.10 = 0..10V 2.10 = 2..10V crAL= Thermocouple K	Depends on the probe
SP	Set point 1	SPLL ... SPLH	See page 7
AL1	AL1 threshold	AL1L... AL1H (E.U.)	
HAL1	AL1 hysteresis	1... 9999 (E.U.)	
Pb	Proportional band	1... 9999 (E.U.)	
ti	Integral time	0 (oFF) ... 9999 (s)	
td	Derivative time	0 (oFF) ... 9999 (s)	
Str.t	Servomotor stroke time	5...1000 seconds	
db.S	Servomotor dead band	0...100%	
SPLL	Minimum set point value	-1999 ... SPHL	
SPHL	Maximum set point value	SPLL ... 9999	
dp	Decimal point position	0... 3	
SP 2	Set point 2	SPLL...SPLH	60
A.SP	Selection of the active set point	"SP" ... " nSP"	SP

To exit the parameter setting procedure press the ↩ key (for 3 s) or wait until the timeout expiration (about 30 seconds)

Probe parameters configuration MODULATORE ASCON KM3

Parameter Group	**inP**						**AL1**		**rEG**					**SP**		
Parameter	**Sens**	**dp**	**SSC**	**FSc**	**unit**	**IO4.F (**)**	**AL1 (***)**	**HAL1 (***)**	**Pb (***)**	**ti (***)**	**td (***)**	**Str.t**	**db.S**	**SPLL**	**SPHL**	**SP (***)**
Probes		Dec Point	Scale Min	Scale Max			Off	On	p	i	d	servo time s	Band Mo.	SP Min	SP Max	Set point
Pt1000 (130°C max)	Pt10	1			°C	on	5	10	10	350	1	*	5	30	95	80
Pt1000 (350°C max)	PT10	1			°C	on	10	10	10	350	1	*	5	0	350	80
Pt100 (130°C max)	PT1	1			°C	on	5	10	10	350	1	*	5	0	95	80
Pt100 (350°C max)	Pt1	1			°C	on	10	10	10	350	1	*	5	0	350	80
Pt100 (0÷100°C 4÷20mA)	4.20	1	0	100		on	5	10	10	350	1	*	5	0	95	80
Thermocouple K (1200°C max)	crAL	0			°C	on	20	25	10	350	1	*	5	0	1200	80
Thermocouple J (1000°C max)	J	0			°C	on	20	25	10	350	1	*	5	0	1000	80
4-20mA / 0-1,6barPressure probe	4.20	0	0	160		on	20	20	5	120	1	*	5	0	160	100
4-20mA / 0-10bar Pressure probe	4.20	0	0	1000		on	50	50	5	120	1	*	5	0	1000	600
4-20mA / 0-16bar Pressure probe	4.20	0	0	1600		on	80	80	5	120	1	*	5	0	1600	600
4-20mA / 0-25bar Pressure probe	4.20	0	0	2500		on	125	125	5	120	1	*	5	0	2500	600
4-20mA / 0-40bar Pressure probe	4.20	0	0	4000		on	200	200	5	120	1	*	5	0	4000	600
QBE2002 / 0-25bar Pressure probe	0.10	0	0	2500		0n	125	125	5	120	1	*	5	0	2500	600

Note:

(*) Str.t - Servomotor stroke time
SQL33; STM30; SQM10; SQM40; SQM50; SQM54 = 30 (Seconds)
STA12B3.41; SQN30.251; SQN72.4A4A20 = 12 (Seconds)

(**) Out 4 … on Display led °4 must be switched on, otherwise change the io4.F parameter value from "on" to "out4", confirm the value, quit the configuration mode then change again the io4.F parameter value from "out4" to "on".

(***) Factory settings. These values must be adapted to machine conditions

N.B. For pressure probe, SP, SPHL, SPLL parameters values are expressed in Kpa (1 bar = 100 Kpa).

CONFIGURATION

How to access configuration level

The configuration parameters are collected in various groups. Every group defines all parameters related with a specific function (e.g.: control, alarms, output functions).

1. Push the button for more than 5 seconds. The upper display will show PASS while the lower display will show 0.
2. Using and buttons set the programmed password.
   According to the entered password, it is possible to see a part of the parameters listed in the "configuration parameters" section.
   a. Enter "**30**" as password to view all the configuration parameters
   b. Enter "**20**" as password to view the parameters of the "limited access level". At this point, only the parameters with attribute **Liv = A** or **Liv = O** will be editable.
   c. Leave the password blank to edit "user level" parameters, that are identified by attribute **Liv = O**
3. Push the button. If the password is correct the display will show the acronym of the first parameter group preceded by the symbol: . In other words the upper display will show: inP (group of the **Input parameters**).

The instrument is in configuration mode. To press for more than 5 seconds, the instrument will return to the "standard display.

Keyboard functions during parameter changing:

	Operator Mode
	When the upper display is showing a group and the lower display is blank, this key allows to enter in the selected group. When the upper display is showing a parameter and the lower display is showing its value, this key allows to store the selected value for the current parameter and access the next parameter within the same group.
	Allows to increase the value of the selected parameter.
	Allows to decrease the value of the selected parameter.
	Short presses allow you to exit the current group of parameters and select a new group. A long press terminates the configuration procedure (the instrument returns to the normal display).
+	These two keys allow to return to the previous group. Proceed as follows: Push the button and maintaining the pressure, then push the ; release both the buttons.

Configuration Parameters

inP GROUP - input confiuration					
Liv	**N°**	**Param**	**Description**	**Values**	**Default**
A	1	SEnS	Input type	Pt1 = RTD Pt100 Pt10 = RTD Pt1000 0.20 = 0..20mA 4.20 = 4..20mA Pressure probe 0.10 = 0..10V 2.10 = 2..10V crAL= Thermocouple K	Depends on the probe
A	2	dp	Decimal point position	0... 3	See page 7
A	3	SSc	Initial scale read-out for linear inputs (avaiable only if SEnS parameter is not equal to Pt1, Pt10, crAL values)	-1999... 9999	0
C	4	FSc	Full scale read-out for linear input inputs (avaiable only if SEnS parameter is not equal to Pt1, Pt10, crAL values)	-1999... 9999	Depends on the probe
C	5	unit	Unit of measure (present only in the case of temperature probe)	°C/°F	°C
C	6	Fil	Digital filter on the measured value	0 (= OFF)... 20.0 s	1.0
C	7	inE	Selection of the Sensor Out of Range type that will enable the safety output value	or = Over range ou = Under range our = over e under range	or

C	8	oPE	Safety output value	-100... 100	0
C	9	io4.F	I/O4 function selection	on = Out4 will be ever ON (used as a transmitter power supply) ,out4 = Uscita 4 (Used as digital output 4), dG2c = Digital input 2 for contact closure, dG2U = Digital input 2 driven by 12... 24 VDC	on
C	10	diF1	Digital input 1 function	oFF = Not used, 1 = Alarm reset, 2 = Alarm acknowledge (ACK), 3 = Hold of the measured value, 4 = Stand by mode, 5 = Manual mode, 6 = HEAt with SP1 and CooL with SP2, 7 = Timer RUN/Hold/Reset, 8 = Timer Run, 9 = Timer Reset, 10 = Timer Run/Hold, 11 = Timer Run/Reset, 12 = Timer Run/Reset with lock, 13 = Program Start, 14 = Program Reset, 15 = Program Hold, 16 = Program Run/Hold, 17 = Program Run/Reset, 18 = Sequential SP selection, 19 = SP1 - SP2 selection, 20 = SP1... SP4 binary selection, 21 = Digital inputs in parallel	19
C	12	di.A	Digital Inputs Action (DI2 only if configured)	0 = DI1 direct action, DI2 direct action 1 = DI1 reverse action, DI2 direct action 2 = DI1 direct action, DI2 reverse action 3 = DI1 reverse action, DI2 reverse action	0

Out GROUP- Output parameters					
Liv	**N°**	**Param**	**Description**	**Values**	**Default**
C	14	o1F	Out 1 function	AL = Alarm output	AL
C	15	o1AL	Initial scale value of the analog retransmission	-1999 ... Ao1H	1
C	18	o1Ac	Out 1 action	dir = Direct action rEU = Reverse action dir.r = Direct with reversed LED ReU.r = Reverse with reversed LED	rEUr.r
C	19	o2F	Out 2 function	H.rEG = Heating output	H.rEG
C	21	o2Ac	Out 2 action	dir = Direct action rEU = Reverse action dir.r = Direct with reversed LED ReU.r = Reverse with reversed LED	dir
C	22	o3F	Out 3 function	H.rEG = Heating output	H.rEG
C	24	o3Ac	Out 3 action	dir = Direct action rEU = Reverse action dir.r = Direct with reversed LED ReU.r = Reverse with reversed LED	dir

AL1 GROUP - Alarm 1 parameters					
Liv	**N°**	**Param**	**Descrizione**	**Values**	**Default**
C	28	AL1t	Tipo allarme AL1	nonE = Alarm not used LoAb = Absolute low alarm HiAb = Absolute high alarm LHAo = Windows alarm in alarm outside the windows LHAI = Windows alarm in alarm inside the	HidE

				windows SE.br = Sensor Break LodE = Deviation low alarm (relative) HidE = Deviation high alarm (relative) LHdo = Relative band alarm in alarm out of the band LHdi = Relative band alarm in alarm inside the band	
C	29	Ab1	Alarm 1 function	0... 15 +1 = Not active at power up +2 = Latched alarm (manual reset) +4 = Acknowledgeable alarm +8 = Relative alarm not active at set point change	0
C	30	AL1L	-- For High and low alarms, it is the low limit of the AL1 threshold; -- For band alarm, it is low alarm threshold	-1999... AL1H (E.U.)	-199.9
C	31	AL1H	-- For High and low alarms, it is the high limit of the AL1 threshold; -- For band alarm, it is high alarm threshold	AL1L... 9999 (E.U.)	999.9
O	32	AL1	AL1 threshold	AL1L... AL1H (E.U.)	See page 7
O	33	HAL1	AL1 hysteresis	1... 9999 (E.U.)	See page 7
C	34	AL1d	AL1 delay	0 (oFF)... 9999 (s)	oFF
C	35	AL1o	Alarm 1 enabling during Stand-by mode and out of range conditions	0 = Alarm 1 disabled during Stand by and out of range 1 = Alarm 1 enabled in stand by mode 2 = Alarm 1 enabled in out of range condition 3 = Alarm 1 enabled in stand by mode and in overrange condition	1

GRUPPO AL2 - parametri allarme 2					
Liv	**N°**	**Param**	**Description**	**Values**	**Default**
C	36	AL2t	Alarm 2 type	nonE = Alarm not used LoAb = Absolute low alarm HiAb = Absolute high alarm LHAo = Windows alarm in alarm outside the windows LHAI = Windows alarm in alarm inside the windows SE.br = Sensor Break LodE = Deviation low alarm (relative) HidE = Deviation high alarm (relative) LHdo = Relative band alarm in alarm out of the band LHdi = Relative band alarm in alarm inside the band	SE.br
C	37	Ab2	Alarm 2 function	0... 15 +1 = Not active at power up +2 = Latched alarm (manual reset) +4 = Acknowledgeable alarm +8 = Relative alarm not active at set point change	0
C	42	AL2d	AL2 hysteresis	0 (oFF)... 9999 (s)	oFF
C	43	AL2o	Alarm 2 enabling during Stand-by mode and out of range conditions	0 = Alarm 2 disabled during Stand by and out of range 1 = Alarm 2 enabled in stand by mode 2 = Alarm 2 enabled in out of range condition 3 = Alarm 2 enabled in stand by mode and in overrange condition	0

AL3 Group - alarm 3 parameters					
Liv	**N°**	**Param**	**Description**	**Values**	**Default**
	44	AL3t	Alarm 3 type	nonE = Alarm not used LoAb = Absolute low alarm HiAb = Absolute high alarm LHAo = Windows alarm in alarm outside the windows LHAI = Windows alarm in alarm inside the windows SE.br = Sensor Break LodE = Deviation low alarm (relative) HidE = Deviation high alarm (relative) LHdo = Relative band alarm in alarm out of the band LHdi = Relative band alarm in alarm inside the band	nonE

LbA Group - Loop break alarm					
Liv	**N°**	**Param**	**Descrizione**	**Values**	**Default**
C	52	LbAt	LBA time	Da 0 (oFF) a 9999 (s)	oFF

rEG Group - Control parameters					
Liv	**N°**	**Param**	**Description**	**Values**	**Default**
C	56	cont	Control type	Pid = PID (heat and/or) On.FA = ON/OFF asymmetric hysteresis On.FS = ON/OFF symmetric hysteresis nr = Heat/Cool ON/OFF control with neutral zone 3Pt = Servomotor control (available only when Output 2 and Output 3 have been ordered as “M”)	3pt
C	57	Auto	Autotuning selection	-4 = Oscillating auto-tune with automaticrestart at power up and after all point change -3 = Oscillating auto-tune with manual start -2 = Oscillating -tune with auto-matic start at the first power up only -1 = Oscillating auto-tune with auto-matic restart at every power up 0 = Not used 1 = Fast auto tuning with automatic restart at every power up 2 = Fast auto-tune with automatic start the first power up only 3 = FAST auto-tune with manual start 4 = FAST auto-tune with automatic restart at power up and after set point change 5 = Evo-tune with automatic restart at every power up 6 = Evo-tune with automatic start the first power up only 7 = Evo-tune with manual start 8 = Evo-tune with automatic restart at power up and after a set point change	7
C	58	tunE	Manual start of the Autotuning	oFF = Not active on = Active	oFF

C	59	SELF	Self tuning enabling	no = The instrument does not perform the self-tuning YES = The instrument is performing the self-tuning	No
A	62	Pb	Proportional band	1... 9999 (E.U.)	See page 7
A	63	ti	Integral time	0 (oFF) ... 9999 (s)	See page 7
A	64	td	Derivative time	0 (oFF) ... 9999 (s)	See page 7
C	65	Fuoc	Fuzzy overshoot control	0.00... 2.00	1
C	69	rS	Manual reset (Integral pre-load)	-100.0... +100.0 (%)	0.0
A	70	Str.t	Servomotor stroke time	5...1000 seconds	See page 7
A	71	db.S	Servomotor dead band	0...100%	5
C	72	od	Delay at power up	0.00 (oFF) ... 99.59 (hh.mm)	oFF

SP Group - Set point parameters

Liv	N°	Param	Description	Values	Default
C	76	nSP	Number of used set points	1... 4	2
A	77	SPLL	Minimum set point value	-1999 ... SPHL	See page 7
A	78	SPHL	Maximum set point value	SPLL ... 9999	See page 7
O	79	SP	Set point 1	SPLL ... SPLH	See page 7
C	80	SP 2	Set point 2	SPLL ... SPLH	60
	83	A.SP	Selection of the active set point	"SP" ... " nSP"	SP
C	84	SP.rt	Remote set point type	RSP = The value coming from serial link is used as remote set point trin = The value will be added to the local set point selected by A.SP and the sum becomes the operative set point PErc = The value will be scaled on the input range and this value will be used as remote SP	trin
C	85	SPLr	Local/remote set point selection	Loc = Local rEn = Remote	Loc
C	86	SP.u	Rate of rise for POSITIVE set point change (ramp UP)	0.01... 99.99 (inF) Eng. units per minute	inF
C	87	SP.d	Rate of rise for NEGATIVE set point change (ramp DOWN)	0.01... 99.99 (inF) Eng. units per minute	inF

PAn Group - Operator HMI

Liv	N°	Param	Description	Values	Default
C	118	PAS2	Level 2 password (limited access level)	oFF (Level 2 not protected by password) 1... 200	20
C	119	PAS3	Level 3 password (complete configuration level)	3... 300	30
C	120	PAS4	Password livello (livello configurazione a codice)	201... 400	300
C	121	uSrb	button function during RUN TIME	nonE = No function tunE = Auto-tune/self-tune enabling. A single press (longer than 1 second) starts the auto-tune oPLo = Manual mode. The first pressure puts the instrument in manual mode (OPLO) while a second one puts the instrument in Auto mode	tunE

				AAc = Alarm reset ASi = Alarm acknowledge chSP = Sequential set point selection St.by = Stand by mode. The first press puts the instrument in stand by mode while a second one puts the instrument in Auto mode. Str.t = Timer run/hold/reset P.run = Program run P.rES = Program reset P.r.H.r = Program run/hold/reset	
C	122	diSP	Display management	Spo = Operative set point	SPo
C	123	di.cL	Display colour	0 = The display colour is used to show the actual deviation (PV - SP) 1 = Display red (fix) 2 = Display green (fix) 3 = Display orange (fix)	2
	125	diS.t	Display Timeout	-- oFF (display always ON) -- 0.1... 99.59 (mm.ss)	oFF
C	126	fiLd	Filter on the displayed value	-- oFF (filter disabled) -- From 0.0 (oFF) to 20.0 (E.U.)	oFF
C	128	dSPu	Instrument status at power ON	AS.Pr = Starts in the same way it was prior to the power down Auto = Starts in Auto mode oP.0 = Starts in manual mode with a power output equal to zero St.bY = Starts in stand-by mode	Auto
C	129	oPr.E	Operative modes enabling	ALL = All modes will be selectable by the next parameter Au.oP = Auto and manual (OPLO) mode only will be selectable by the next parameter Au.Sb = Auto and Stand-by modes only will be selectable by the next parameter	ALL
C	130	oPEr	Operative mode selection	If oPr.E = ALL: - Auto = Auto mode - oPLo = Manual mode - St.bY = Stand by mode If oPr.E = Au.oP: - Auto = Auto mode - oPLo = Manual mode If oPr.E = Au.Sb: - Auto = Auto mode - St.bY = Stand by mode	Auto

SEr Group - Serial link parameter					
Liv	**N°**	**Param**	**Description**	**Values**	**Default**
C	131	Add	Instrument address	-- oFF -- 1... 254	1
C	132	bAud	baud rate	1200 = 1200 baud 2400 = 2400 baud 9600 = 9600 baud 19.2 = 19200 baud 38.4 = 38400 baud	9600
C	133	trSP	Selection of the value to be retransmitted (Master)	nonE = Retransmission not used (the instrument is a slave) rSP = The instrument becomes a Master and retransmits the operative set point PErc = The instrument become a Master and it retransmits the power output	nonE

con Group - Consumption parameters					
Liv	**N°**	**Param**	**Description**	**Values**	**Default**
C	134	Co.tY	Count type	oFF = Not used 1 = Instantaneous power (kW) 2 = Power consumption (kW/h) 3 = Energy used during program execution. This measure starts from zero when a program runs end stops at the end of the program. A new program execution will reset the value 4 = Total worked days: number of hours the instrument is turned ON divided by 24. 5 = Total worked hours: number of hours the instrument is turned ON. 6 = Total worked days with threshold: number of hours the instrument is turned ON divided by 24, the controller is forced in stand-by when Co.ty value reaches the threshold set in [137] h.Job. 7 = Total worked hours with threshold: number of hours the instrument is turned ON, the controller is forced in stand-by when Co.ty value reaches the threshold set in [137] h.Job. 8 = Totalizer of control relay worked days: number of hours the control relay has been in ON condition, divided by 24. 9 = Totalizer of control relay worked hours: number of hours the control relay has been in ON condition. 10 = Totalizer of control relay worked days with threshold: number of hours the control relay has been in ON condition divided by 24, the controller is forced in stand-by when Co.ty value reaches the threshold set in [137] h.Job. 11 = Totalizer of control relay worked hours with threshold: number of hours the control relay has been in ON condition, the controller is forced in stand-by when Co.ty value reaches the threshold set in [137] h.Job.	oFF
C	138	t.Job	Worked time (not resettable)	0... 9999 days	0

cAL Group - User calibration group					
Liv	**N°**	**Param**	**Description**	**Values**	**Default**
C	139	AL.P	Adjust Low Point	From -1999 to (AH.P - 10) in engineering units	0
C	140	AL.o	Adjust Low Offset	-300... +300 (E.U.)	0
C	141	AH.P	Adjust High Point	From (AL.P + 10) to 9999 engineering units	999.9
C	142	AH.o	Adjust High Offset	-300... +300	0

OPERATIVE MODES

When the instrument is powered, it starts immediately to work according to the parameters values loaded in its memory. The instrument behaviour and its performance are governed by the value of the stored parameters.

At power ON the instrument can start in one of the following mode depending on its configuration:

Automatic Mode In Automatic mode the instrument drives automatically the control output according to the parameter value set and the set point/measured value.

Manual Mode (OPLO): In Manual mode the the upper display shows the measured value while the lower display shows the power output The lower display shows the power output [preceded by H (for heating) or C (for cooling)], MAN is lit and the instrument allows you to set manually the control output power. No Automatic action will be made.

Stand by Mode (St.bY): In stand-by mode the instrument operates as an indicator. It will show on the upper display the measured value and on the lower display the set point alternately to the “St.bY” messages and forces the control outputs to zero.

We define all the above described conditions as “Standard Display”.

As we have seen, it is always possible to modify the value assigned to a parameter independently from the operative modes selected.

AUTOMATIC MODE

Keyboard function when the instrument is in Auto mode:

	Modo Operatore
	Allows entry into parameter modification procedures
	Allows you to start the “Direct set point modification” function (see below).
	Allows you to display the “additional informations” (see below).
	Performs the action programmed by [121] uSrb (button function during RUN TIME) parameter

Additional information
This instrument is able to show you some additional informations that can help you to manage your system.
The additional informations are related to how the instrument is programmed, hence in many cases, only part of this information is available.

1. When the instrument is showing the “standard display” push button. The lower display will show H or c followed by a number. This value is the current power output applied to the process. The H show you that the action is a Heating action while the "c" show you that the action is a Cooling action
2. Push button again. When the programmer is running the lower display will show the segment currently performed and the Event status as shown below:
   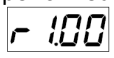 where the first character can be r for a ramp or S for a soak, the next digit show the number of the segment (e.g. S3 means Soak number 3) and the twoless significant digits (LSD) show you the status of the two event (the LSD is the Event 2)..
3. Push button again. When the programmer is running the lower display will show the theoretical remaining time to the end of the program preceded by a "P" letter:
   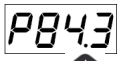
4. Push button again. When the wattmeter function is running the lower display will show U followed by the measured energy..
5. Push button. When the “Worked time count” is running the lower display will show "d" for days or "h" for hours followed by the measured time.
6. Push button. The instrument returns to the "standard display".

Note: The additional information visualization is subject to a time out. If no button is pressed for more than 10 second the instrument comes automatically back to the Standard display..

Direct set point modification
This function allows to modify rapidly the set point value selected by [83] A.SP (selection of the active Set point) or to the set point of the segment group (of the programmer) currently in progress.

1. Push button. The upper display shows the acronym of the selected set point (e.g. SP2) and the lower display will show its value.
2. By and buttons, assign to this parameter the desired value
3. Do not push any button for more than 5 second or push the button. In both cases the instrument memorize the new value and come back to the “standard display”.

Manual mode

This operative mode allows you to deactivate automatic control and manually program the percentage power output to the process. When the instrument is in manual mode, the upper display shows the measured value while the lower display shows the power output [preceded by H (for heating action) or C (for cooling action)] The MAN LED is lit. When manual control is selected, the instrument will start to operate with the same power output as the last one supplied by automatic mode and can be modified using the and buttons.

In case of ON/OFF control, 0% corresponds to the deactivated output while any value different from 0 corresponds to the activated output. As in the case of visualization, the programmable values range from H100 (100% output power with reverse action) to C100 (100% output power with direct action).

Notes:

- During manual mode, the alarms are operative.
- If you set manual modes during program execution, the program will be frozen and it will restart when the instrument will come back to Auto mode.
- If you set manual modes during self-tune execution, the self- tune function will be aborted.
- During manual mode, all functions not related with the control (wattmeter, independent timer, “worked time”, etc) continue to operate normally..

STAND-BY MODE

This operative mode also deactivates the automatic control but forces the control output to zero. In this mode the instrument operates as an indicator. When the instrument is in stand by mode the upper display will show the measured value while the lower display will show alternately the set point and the message “St.bY”.

Notes:

- During stand by mode, the relative alarms are disabled while the absolute alarms are operative or not according to the ALxo (Alarm x enabling during Stand-by mode) parameter setting.
- If you set stand by mode during program execution, the program will be aborted.
- If you set stand by mode during self-tune execution, the self- tune function will be aborted.
- During stand by mode, all functions not related with the control (wattmeter, independent timer, “worked time”, etc) continue to operate normally.
- When the instrument is swapped from stand by to auto modes, the instrument will start automatically the alarm masking, the soft start functions and the auto-tune (if programmed).

AUTOTUNE (EVOTUNE)

Evotune is a fast and fully automatic procedure that can be started in any condition, regardless the deviation from SP. The controller selects automatically the best tune method and computes the optimum PID parameters. To activate Evotune press button for 3 seconds.

ERROR MESSAGES

The upper display shows the OVER-RANGE and UNDERRANGE conditions with the following indications:

Over-range:

Under-range

The sensor break will be signalled as an out of range:

Note: When an over-range or an under-range is detected, the alarms operate as in presence of the maximum or the minimum measurable value respectively.

To check the out of span Error condition, proceed as follows:

1. Check the input signal source and the connecting line.
2. Make sure that the input signal is in accordance with the instrument configuration. Otherwise, modify the input configuration.
3. If no error is detected, send the instrument to your supplier to be checked.

List of possible errors

ErAT Fast Auto-tune cannot start. The measure value is tooclose to the set point. Push the button in order to delete the error message.

ouLd Overload on the out 4. The messages shows that a short circuit is present on the Out 4 when it is used as output or as a transmitter power suply. When the short circuit disappears the output restart to operate..

NoAt Auto-tune not finished within 12 hours.

ErEP Possible problem of the instrument memory. The messages disappears automatically. When the error continues, send the instrument to your supplier.

RonE Possible problem of the firmware memory. When this error is detected, send the instrument to your supplier.

Errt Possible problem of the calibration memory. When this error is detected, send the instrument to your supplier.

FACTORY RESET

Sometime, e.g. when you re-configure an instrument previously used for other works or from other people or when you have made too many errors during configuration and you decided to re-configure the instrument, it is possible to restore the factory configuration. This action allows to put the instrument in a defined condition (the same it was at the first power ON).

The default data are those typical values loaded in the instrument prior to ship it from factory. To load the factory default parameter set, proceed as follows:

1. Press the ↵ button for more than 5 seconds. The upper display will show PASS while the lower display shows 0;
2. Using ▲ and ▼ buttons set the value -481;
3. Push ↵ button;
4. The instrument will turn OFF all LEDs for a few seconds, then the upper display will show dFLt (default) and then all LEDs are turned ON for 2 seconds. At this point the instrument restarts as for a new power ON.

The procedure is complete.

Note: The complete list of the default parameters is available in Chapter "Configuration".

KM3 Modulator

USER MANUAL

M12927CA Rel.1.0 10/2020

MOUNTING

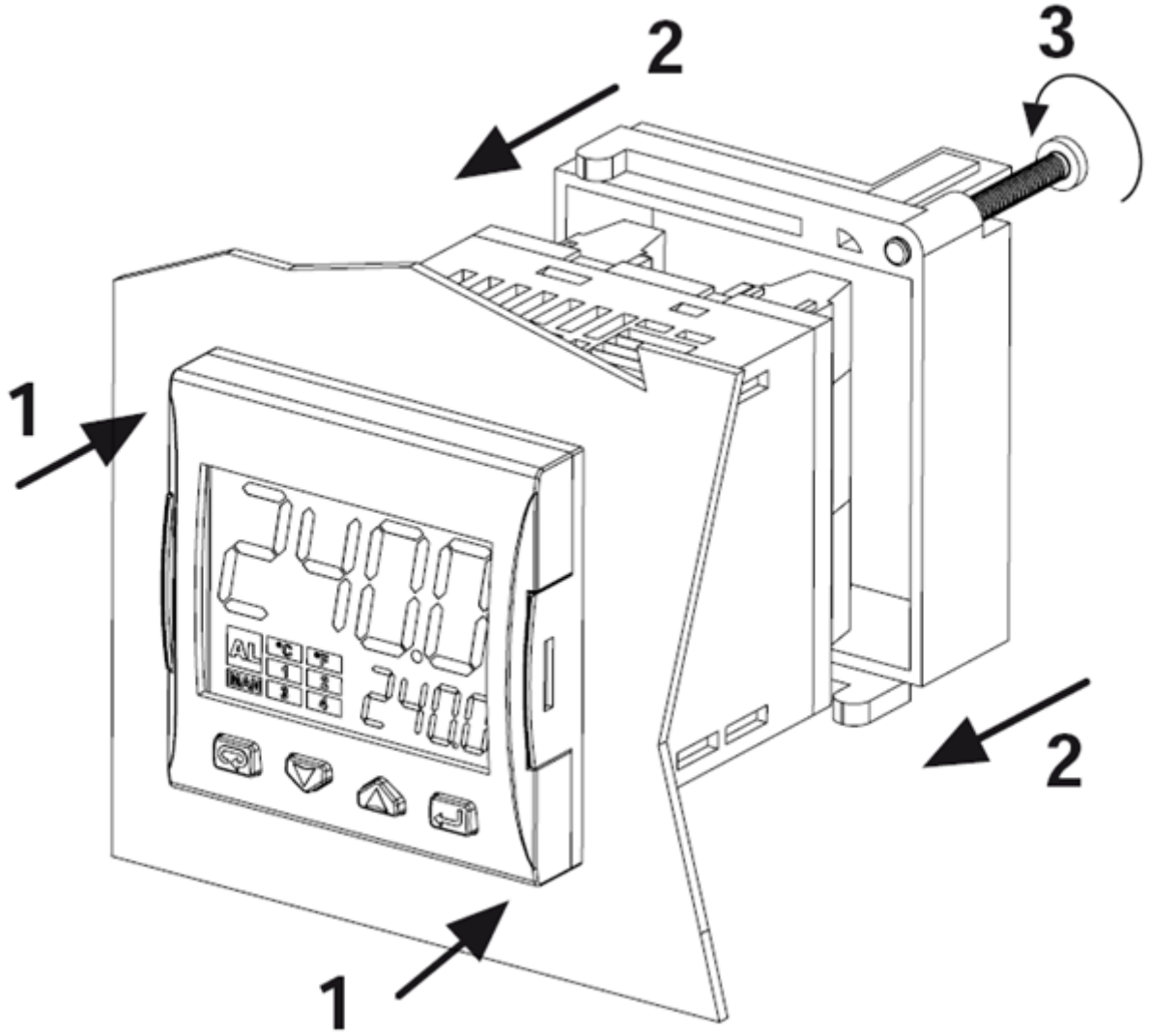

DISPLAY AND KEYS

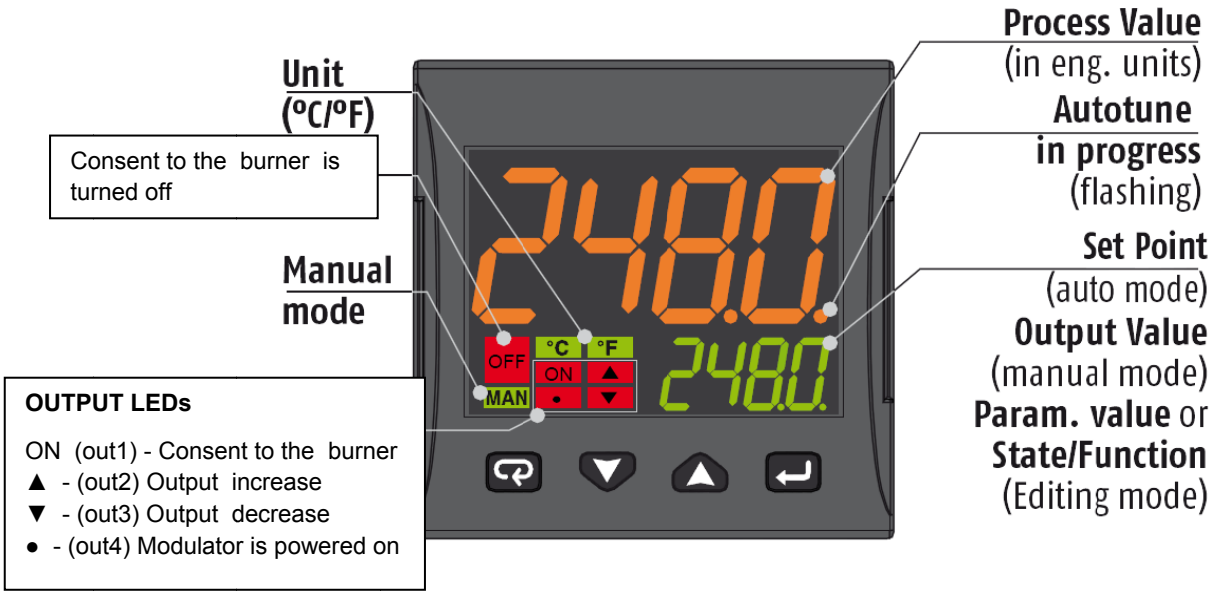

	Operator Mode	Editing Mode
	Access to: - Operator Commands (Timer, Setpoint selection ...) - Parameters - Configuration	Confirm and go to Next parameter
	Access to: - Operator additional information (Output value, running time ...)	Increase the displayed value or select the next element of the parameters list
	Access to: - Set Point	Decrease the displayed value or select the previous element
	Programmable key: Start the programmed function (Autotune, Auto/Man, Timer ...)	Exit from Operator commands/Parameter setting/Configuration

CONNECTIONS DIAGRAM

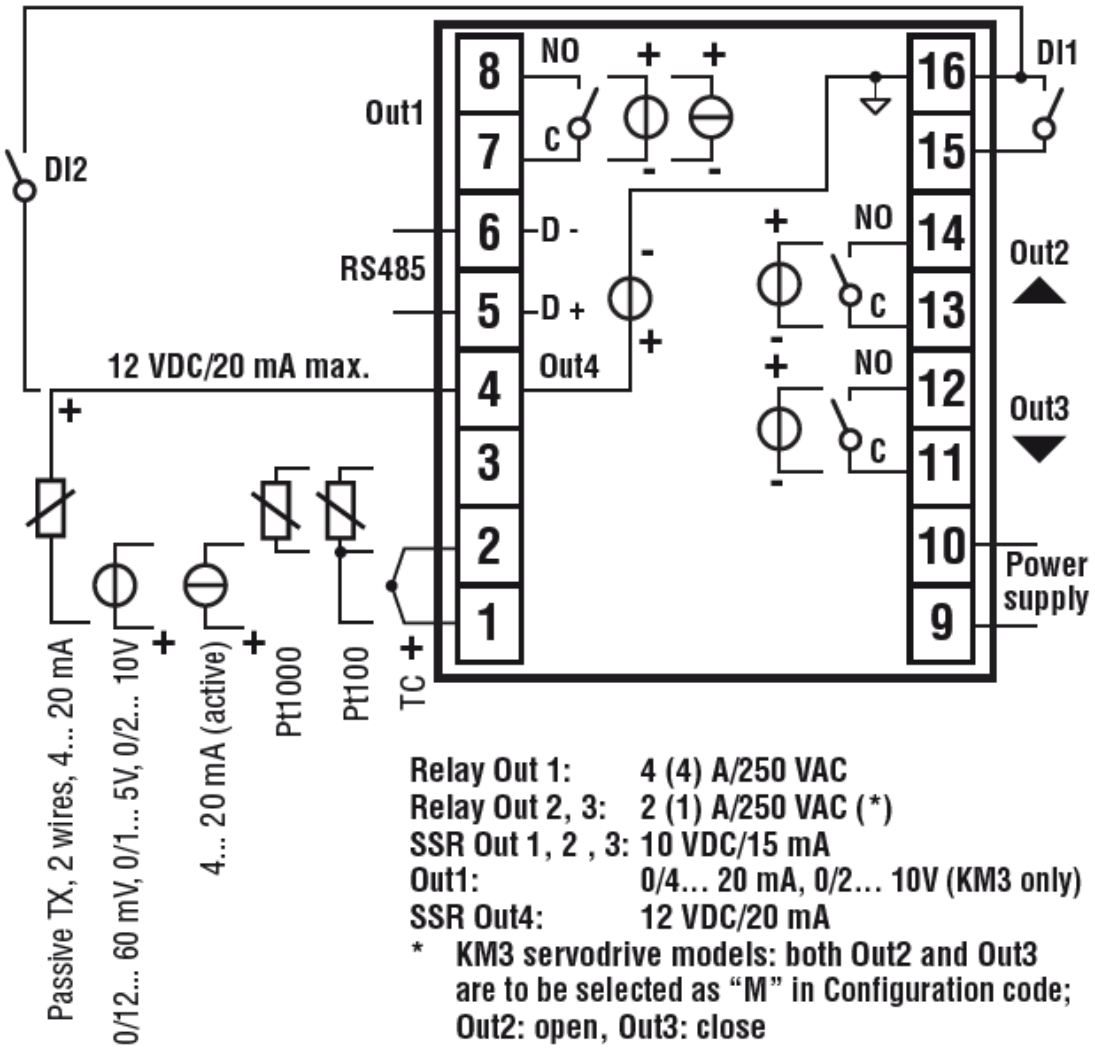

Probe connection:

- **PT1000/NTC/PTC**: between terminal 3 and 2
- **PT 100**: between terminal 3 and 2 with terminal 1
- **Passive pressure probe** 0/4-20 mA: between terminal 4 (+) e 1 (-)
  Note: out4 must be activated (IO4F must be setted to ON)
- **Powered pressure probe** 0/4-20 mA between terminal 4 (power supply), 2 (negative) e 1 (positive)
  Note: set IO4F to ON to activate Out4

Power supply connection:

- **Neutral wire:** terminal 9
- **Phase:** terminal 10 (100…240 Vac)
- Close terminals 15-16 to switch to the set point 2

Output connection:

- **Channel 1:** terminal 7 and 8 (burner on – off)
- **Channel 2:** terminal 11 and 12 (servomotor opens)
- **Channel 3:** terminal 13 and 14 (servomotor closes)

SETPOINT AND HYSTERESIS CONFIGURATION (SP, AL1, HAL1 parameters)

Push the ↵ button to enter into the setpoint configuration:

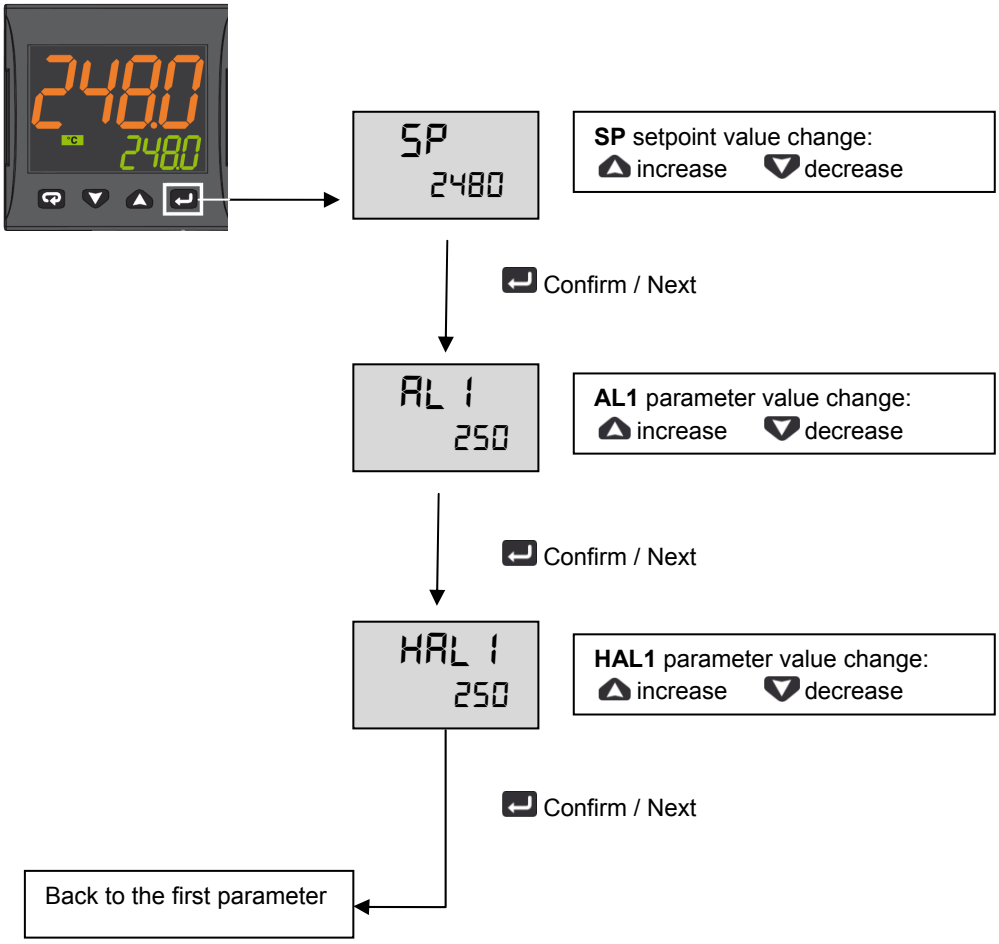

To return to normal mode, press the ↩ key for 3 seconds or wait the 10s timeout

Operation example

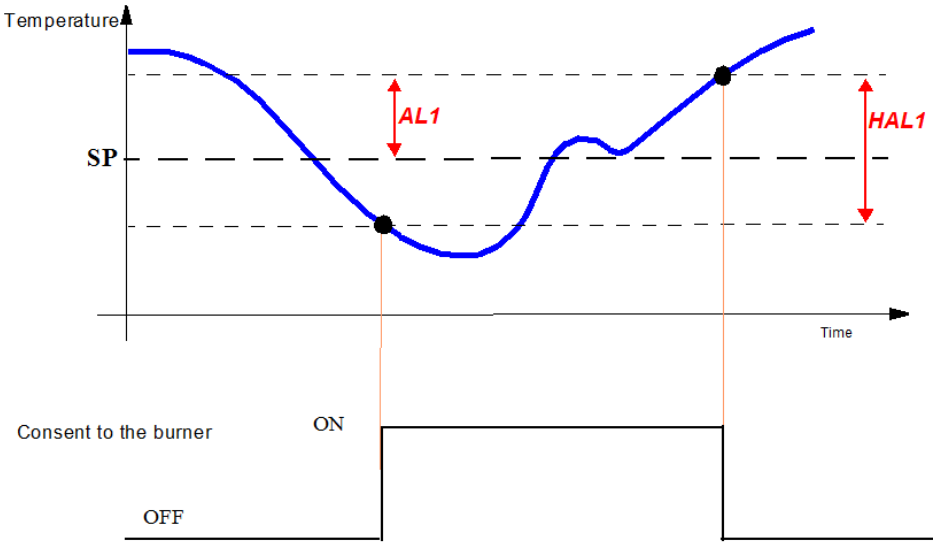

LIMITED ACCESS LEVEL

Proceed as follows to change some parameters that are not visible in standard user mode:

Press the ↵ key for 3 seconds

Password = 20

Access to parameter:

▲	Increase the displayed value
▼	Decrease the displayed value
↵	Confirm and go to next parameter

Param	Description	Values	Default
SEnS	Input type	Pt1 = RTD Pt100 Pt10 = RTD Pt1000 0.20 = 0..20mA 4.20 = 4..20mA Pressure probe 0.10 = 0..10V 2.10 = 2..10V crAL= Thermocouple K	Depends on the probe
SP	Set point 1	SPLL ... SPLH	See page 7
AL1	AL1 threshold	AL1L... AL1H (E.U.)	
HAL1	AL1 hysteresis	1... 9999 (E.U.)	
Pb	Proportional band	1... 9999 (E.U.)	
ti	Integral time	0 (oFF) ... 9999 (s)	
td	Derivative time	0 (oFF) ... 9999 (s)	
Str.t	Servomotor stroke time	5...1000 seconds	
db.S	Servomotor dead band	0...100%	
SPLL	Minimum set point value	-1999 ... SPHL	
SPHL	Maximum set point value	SPLL ... 9999	
dp	Decimal point position	0... 3	
SP 2	Set point 2	SPLL...SPLH	60
A.SP	Selection of the active set point	"SP" ... " nSP"	SP

To exit the parameter setting procedure press the ↩ key (for 3 s) or wait until the timeout expiration (about 30 seconds)

Probe parameters configuration MODULATORE ASCON KM3

Parameter Group	**inP**						**AL1**		**rEG**					**SP**		
Parameter	**Sens**	**dp**	**SSC**	**FSc**	**unit**	**IO4.F (**)**	**AL1 (***)**	**HAL1 (***)**	**Pb (***)**	**ti (***)**	**td (***)**	**Str.t**	**db.S**	**SPLL**	**SPHL**	**SP (***)**
Probes		Dec Point	Scale Min	Scale Max			Off	On	p	i	d	servo time s	Band Mo.	SP Min	SP Max	Set point
Pt1000 (130°C max)	Pt10	1			°C	on	5	10	10	350	1	*	5	30	95	80
Pt1000 (350°C max)	PT10	1			°C	on	10	10	10	350	1	*	5	0	350	80
Pt100 (130°C max)	PT1	1			°C	on	5	10	10	350	1	*	5	0	95	80
Pt100 (350°C max)	Pt1	1			°C	on	10	10	10	350	1	*	5	0	350	80
Pt100 (0÷100°C 4÷20mA)	4.20	1	0	100		on	5	10	10	350	1	*	5	0	95	80
Thermocouple K (1200°C max)	crAL	0			°C	on	20	25	10	350	1	*	5	0	1200	80
Thermocouple J (1000°C max)	J	0			°C	on	20	25	10	350	1	*	5	0	1000	80
4-20mA / 0-1,6barPressure probe	4.20	0	0	160		on	20	20	5	120	1	*	5	0	160	100
4-20mA / 0-10bar Pressure probe	4.20	0	0	1000		on	50	50	5	120	1	*	5	0	1000	600
4-20mA / 0-16bar Pressure probe	4.20	0	0	1600		on	80	80	5	120	1	*	5	0	1600	600
4-20mA / 0-25bar Pressure probe	4.20	0	0	2500		on	125	125	5	120	1	*	5	0	2500	600
4-20mA / 0-40bar Pressure probe	4.20	0	0	4000		on	200	200	5	120	1	*	5	0	4000	600
QBE2002 / 0-25bar Pressure probe	0.10	0	0	2500		0n	125	125	5	120	1	*	5	0	2500	600

Note:

(*) Str.t - Servomotor stroke time
SQL33; STM30; SQM10; SQM40; SQM50; SQM54 = 30 (Seconds)
STA12B3.41; SQN30.251; SQN72.4A4A20 = 12 (Seconds)

(**) Out 4 … on Display led °4 must be switched on, otherwise change the io4.F parameter value from "on" to "out4", confirm the value, quit the configuration mode then change again the io4.F parameter value from "out4" to "on".

(***) Factory settings. These values must be adapted to machine conditions

N.B. For pressure probe, SP, SPHL, SPLL parameters values are expressed in Kpa (1 bar = 100 Kpa).

CONFIGURATION

How to access configuration level

The configuration parameters are collected in various groups. Every group defines all parameters related with a specific function (e.g.: control, alarms, output functions).

1. Push the button for more than 5 seconds. The upper display will show PASS while the lower display will show 0.
2. Using and buttons set the programmed password.
   According to the entered password, it is possible to see a part of the parameters listed in the "configuration parameters" section.
   a. Enter "**30**" as password to view all the configuration parameters
   b. Enter "**20**" as password to view the parameters of the "limited access level". At this point, only the parameters with attribute **Liv = A** or **Liv = O** will be editable.
   c. Leave the password blank to edit "user level" parameters, that are identified by attribute **Liv = O**
3. Push the button. If the password is correct the display will show the acronym of the first parameter group preceded by the symbol: . In other words the upper display will show: inP (group of the **Input parameters**).

The instrument is in configuration mode. To press for more than 5 seconds, the instrument will return to the "standard display.

Keyboard functions during parameter changing:

	Operator Mode
	When the upper display is showing a group and the lower display is blank, this key allows to enter in the selected group. When the upper display is showing a parameter and the lower display is showing its value, this key allows to store the selected value for the current parameter and access the next parameter within the same group.
	Allows to increase the value of the selected parameter.
	Allows to decrease the value of the selected parameter.
	Short presses allow you to exit the current group of parameters and select a new group. A long press terminates the configuration procedure (the instrument returns to the normal display).
+	These two keys allow to return to the previous group. Proceed as follows: Push the button and maintaining the pressure, then push the ; release both the buttons.

Configuration Parameters

inP GROUP - input confiuration					
Liv	**N°**	**Param**	**Description**	**Values**	**Default**
A	1	SEnS	Input type	Pt1 = RTD Pt100 Pt10 = RTD Pt1000 0.20 = 0..20mA 4.20 = 4..20mA Pressure probe 0.10 = 0..10V 2.10 = 2..10V crAL= Thermocouple K	Depends on the probe
A	2	dp	Decimal point position	0... 3	See page 7
A	3	SSc	Initial scale read-out for linear inputs (avaiable only if SEnS parameter is not equal to Pt1, Pt10, crAL values)	-1999... 9999	0
C	4	FSc	Full scale read-out for linear input inputs (avaiable only if SEnS parameter is not equal to Pt1, Pt10, crAL values)	-1999... 9999	Depends on the probe
C	5	unit	Unit of measure (present only in the case of temperature probe)	°C/°F	°C
C	6	Fil	Digital filter on the measured value	0 (= OFF)... 20.0 s	1.0
C	7	inE	Selection of the Sensor Out of Range type that will enable the safety output value	or = Over range ou = Under range our = over e under range	or

C	8	oPE	Safety output value	-100... 100	0
C	9	io4.F	I/O4 function selection	on = Out4 will be ever ON (used as a transmitter power supply) ,out4 = Uscita 4 (Used as digital output 4), dG2c = Digital input 2 for contact closure, dG2U = Digital input 2 driven by 12... 24 VDC	on
C	10	diF1	Digital input 1 function	oFF = Not used, 1 = Alarm reset, 2 = Alarm acknowledge (ACK), 3 = Hold of the measured value, 4 = Stand by mode, 5 = Manual mode, 6 = HEAt with SP1 and CooL with SP2, 7 = Timer RUN/Hold/Reset, 8 = Timer Run, 9 = Timer Reset, 10 = Timer Run/Hold, 11 = Timer Run/Reset, 12 = Timer Run/Reset with lock, 13 = Program Start, 14 = Program Reset, 15 = Program Hold, 16 = Program Run/Hold, 17 = Program Run/Reset, 18 = Sequential SP selection, 19 = SP1 - SP2 selection, 20 = SP1... SP4 binary selection, 21 = Digital inputs in parallel	19
C	12	di.A	Digital Inputs Action (DI2 only if configured)	0 = DI1 direct action, DI2 direct action 1 = DI1 reverse action, DI2 direct action 2 = DI1 direct action, DI2 reverse action 3 = DI1 reverse action, DI2 reverse action	0

Out GROUP- Output parameters					
Liv	**N°**	**Param**	**Description**	**Values**	**Default**
C	14	o1F	Out 1 function	AL = Alarm output	AL
C	15	o1AL	Initial scale value of the analog retransmission	-1999 ... Ao1H	1
C	18	o1Ac	Out 1 action	dir = Direct action rEU = Reverse action dir.r = Direct with reversed LED ReU.r = Reverse with reversed LED	rEUr.r
C	19	o2F	Out 2 function	H.rEG = Heating output	H.rEG
C	21	o2Ac	Out 2 action	dir = Direct action rEU = Reverse action dir.r = Direct with reversed LED ReU.r = Reverse with reversed LED	dir
C	22	o3F	Out 3 function	H.rEG = Heating output	H.rEG
C	24	o3Ac	Out 3 action	dir = Direct action rEU = Reverse action dir.r = Direct with reversed LED ReU.r = Reverse with reversed LED	dir

AL1 GROUP - Alarm 1 parameters					
Liv	**N°**	**Param**	**Descrizione**	**Values**	**Default**
C	28	AL1t	Tipo allarme AL1	nonE = Alarm not used LoAb = Absolute low alarm HiAb = Absolute high alarm LHAo = Windows alarm in alarm outside the windows LHAI = Windows alarm in alarm inside the	HidE

				windows SE.br = Sensor Break LodE = Deviation low alarm (relative) HidE = Deviation high alarm (relative) LHdo = Relative band alarm in alarm out of the band LHdi = Relative band alarm in alarm inside the band	
C	29	Ab1	Alarm 1 function	0... 15 +1 = Not active at power up +2 = Latched alarm (manual reset) +4 = Acknowledgeable alarm +8 = Relative alarm not active at set point change	0
C	30	AL1L	-- For High and low alarms, it is the low limit of the AL1 threshold; -- For band alarm, it is low alarm threshold	-1999... AL1H (E.U.)	-199.9
C	31	AL1H	-- For High and low alarms, it is the high limit of the AL1 threshold; -- For band alarm, it is high alarm threshold	AL1L... 9999 (E.U.)	999.9
O	32	AL1	AL1 threshold	AL1L... AL1H (E.U.)	See page 7
O	33	HAL1	AL1 hysteresis	1... 9999 (E.U.)	See page 7
C	34	AL1d	AL1 delay	0 (oFF)... 9999 (s)	oFF
C	35	AL1o	Alarm 1 enabling during Stand-by mode and out of range conditions	0 = Alarm 1 disabled during Stand by and out of range 1 = Alarm 1 enabled in stand by mode 2 = Alarm 1 enabled in out of range condition 3 = Alarm 1 enabled in stand by mode and in overrange condition	1

GRUPPO AL2 - parametri allarme 2					
Liv	**N°**	**Param**	**Description**	**Values**	**Default**
C	36	AL2t	Alarm 2 type	nonE = Alarm not used LoAb = Absolute low alarm HiAb = Absolute high alarm LHAo = Windows alarm in alarm outside the windows LHAI = Windows alarm in alarm inside the windows SE.br = Sensor Break LodE = Deviation low alarm (relative) HidE = Deviation high alarm (relative) LHdo = Relative band alarm in alarm out of the band LHdi = Relative band alarm in alarm inside the band	SE.br
C	37	Ab2	Alarm 2 function	0... 15 +1 = Not active at power up +2 = Latched alarm (manual reset) +4 = Acknowledgeable alarm +8 = Relative alarm not active at set point change	0
C	42	AL2d	AL2 hysteresis	0 (oFF)... 9999 (s)	oFF
C	43	AL2o	Alarm 2 enabling during Stand-by mode and out of range conditions	0 = Alarm 2 disabled during Stand by and out of range 1 = Alarm 2 enabled in stand by mode 2 = Alarm 2 enabled in out of range condition 3 = Alarm 2 enabled in stand by mode and in overrange condition	0

AL3 Group - alarm 3 parameters					
Liv	**N°**	**Param**	**Description**	**Values**	**Default**
	44	AL3t	Alarm 3 type	nonE = Alarm not used LoAb = Absolute low alarm HiAb = Absolute high alarm LHAo = Windows alarm in alarm outside the windows LHAI = Windows alarm in alarm inside the windows SE.br = Sensor Break LodE = Deviation low alarm (relative) HidE = Deviation high alarm (relative) LHdo = Relative band alarm in alarm out of the band LHdi = Relative band alarm in alarm inside the band	nonE

LbA Group - Loop break alarm					
Liv	**N°**	**Param**	**Descrizione**	**Values**	**Default**
C	52	LbAt	LBA time	Da 0 (oFF) a 9999 (s)	oFF

rEG Group - Control parameters					
Liv	**N°**	**Param**	**Description**	**Values**	**Default**
C	56	cont	Control type	Pid = PID (heat and/or) On.FA = ON/OFF asymmetric hysteresis On.FS = ON/OFF symmetric hysteresis nr = Heat/Cool ON/OFF control with neutral zone 3Pt = Servomotor control (available only when Output 2 and Output 3 have been ordered as “M”)	3pt
C	57	Auto	Autotuning selection	-4 = Oscillating auto-tune with automaticrestart at power up and after all point change -3 = Oscillating auto-tune with manual start -2 = Oscillating -tune with auto-matic start at the first power up only -1 = Oscillating auto-tune with auto-matic restart at every power up 0 = Not used 1 = Fast auto tuning with automatic restart at every power up 2 = Fast auto-tune with automatic start the first power up only 3 = FAST auto-tune with manual start 4 = FAST auto-tune with automatic restart at power up and after set point change 5 = Evo-tune with automatic restart at every power up 6 = Evo-tune with automatic start the first power up only 7 = Evo-tune with manual start 8 = Evo-tune with automatic restart at power up and after a set point change	7
C	58	tunE	Manual start of the Autotuning	oFF = Not active on = Active	oFF

C	59	SELF	Self tuning enabling	no = The instrument does not perform the self-tuning YES = The instrument is performing the self-tuning	No
A	62	Pb	Proportional band	1... 9999 (E.U.)	See page 7
A	63	ti	Integral time	0 (oFF) ... 9999 (s)	See page 7
A	64	td	Derivative time	0 (oFF) ... 9999 (s)	See page 7
C	65	Fuoc	Fuzzy overshoot control	0.00... 2.00	1
C	69	rS	Manual reset (Integral pre-load)	-100.0... +100.0 (%)	0.0
A	70	Str.t	Servomotor stroke time	5...1000 seconds	See page 7
A	71	db.S	Servomotor dead band	0...100%	5
C	72	od	Delay at power up	0.00 (oFF) ... 99.59 (hh.mm)	oFF

SP Group - Set point parameters

Liv	N°	Param	Description	Values	Default
C	76	nSP	Number of used set points	1... 4	2
A	77	SPLL	Minimum set point value	-1999 ... SPHL	See page 7
A	78	SPHL	Maximum set point value	SPLL ... 9999	See page 7
O	79	SP	Set point 1	SPLL ... SPLH	See page 7
C	80	SP 2	Set point 2	SPLL ... SPLH	60
	83	A.SP	Selection of the active set point	"SP" ... " nSP"	SP
C	84	SP.rt	Remote set point type	RSP = The value coming from serial link is used as remote set point trin = The value will be added to the local set point selected by A.SP and the sum becomes the operative set point PErc = The value will be scaled on the input range and this value will be used as remote SP	trin
C	85	SPLr	Local/remote set point selection	Loc = Local rEn = Remote	Loc
C	86	SP.u	Rate of rise for POSITIVE set point change (ramp UP)	0.01... 99.99 (inF) Eng. units per minute	inF
C	87	SP.d	Rate of rise for NEGATIVE set point change (ramp DOWN)	0.01... 99.99 (inF) Eng. units per minute	inF

PAn Group - Operator HMI

Liv	N°	Param	Description	Values	Default
C	118	PAS2	Level 2 password (limited access level)	oFF (Level 2 not protected by password) 1... 200	20
C	119	PAS3	Level 3 password (complete configuration level)	3... 300	30
C	120	PAS4	Password livello (livello configurazione a codice)	201... 400	300
C	121	uSrb	button function during RUN TIME	nonE = No function tunE = Auto-tune/self-tune enabling. A single press (longer than 1 second) starts the auto-tune oPLo = Manual mode. The first pressure puts the instrument in manual mode (OPLO) while a second one puts the instrument in Auto mode	tunE

				AAc = Alarm reset ASi = Alarm acknowledge chSP = Sequential set point selection St.by = Stand by mode. The first press puts the instrument in stand by mode while a second one puts the instrument in Auto mode. Str.t = Timer run/hold/reset P.run = Program run P.rES = Program reset P.r.H.r = Program run/hold/reset	
C	122	diSP	Display management	Spo = Operative set point	SPo
C	123	di.cL	Display colour	0 = The display colour is used to show the actual deviation (PV - SP) 1 = Display red (fix) 2 = Display green (fix) 3 = Display orange (fix)	2
	125	diS.t	Display Timeout	-- oFF (display always ON) -- 0.1... 99.59 (mm.ss)	oFF
C	126	fiLd	Filter on the displayed value	-- oFF (filter disabled) -- From 0.0 (oFF) to 20.0 (E.U.)	oFF
C	128	dSPu	Instrument status at power ON	AS.Pr = Starts in the same way it was prior to the power down Auto = Starts in Auto mode oP.0 = Starts in manual mode with a power output equal to zero St.bY = Starts in stand-by mode	Auto
C	129	oPr.E	Operative modes enabling	ALL = All modes will be selectable by the next parameter Au.oP = Auto and manual (OPLO) mode only will be selectable by the next parameter Au.Sb = Auto and Stand-by modes only will be selectable by the next parameter	ALL
C	130	oPEr	Operative mode selection	If oPr.E = ALL: - Auto = Auto mode - oPLo = Manual mode - St.bY = Stand by mode If oPr.E = Au.oP: - Auto = Auto mode - oPLo = Manual mode If oPr.E = Au.Sb: - Auto = Auto mode - St.bY = Stand by mode	Auto

SEr Group - Serial link parameter					
Liv	**N°**	**Param**	**Description**	**Values**	**Default**
C	131	Add	Instrument address	-- oFF -- 1... 254	1
C	132	bAud	baud rate	1200 = 1200 baud 2400 = 2400 baud 9600 = 9600 baud 19.2 = 19200 baud 38.4 = 38400 baud	9600
C	133	trSP	Selection of the value to be retransmitted (Master)	nonE = Retransmission not used (the instrument is a slave) rSP = The instrument becomes a Master and retransmits the operative set point PErc = The instrument become a Master and it retransmits the power output	nonE

con Group - Consumption parameters					
Liv	**N°**	**Param**	**Description**	**Values**	**Default**
C	134	Co.tY	Count type	oFF = Not used 1 = Instantaneous power (kW) 2 = Power consumption (kW/h) 3 = Energy used during program execution. This measure starts from zero when a program runs end stops at the end of the program. A new program execution will reset the value 4 = Total worked days: number of hours the instrument is turned ON divided by 24. 5 = Total worked hours: number of hours the instrument is turned ON. 6 = Total worked days with threshold: number of hours the instrument is turned ON divided by 24, the controller is forced in stand-by when Co.ty value reaches the threshold set in [137] h.Job. 7 = Total worked hours with threshold: number of hours the instrument is turned ON, the controller is forced in stand-by when Co.ty value reaches the threshold set in [137] h.Job. 8 = Totalizer of control relay worked days: number of hours the control relay has been in ON condition, divided by 24. 9 = Totalizer of control relay worked hours: number of hours the control relay has been in ON condition. 10 = Totalizer of control relay worked days with threshold: number of hours the control relay has been in ON condition divided by 24, the controller is forced in stand-by when Co.ty value reaches the threshold set in [137] h.Job. 11 = Totalizer of control relay worked hours with threshold: number of hours the control relay has been in ON condition, the controller is forced in stand-by when Co.ty value reaches the threshold set in [137] h.Job.	oFF
C	138	t.Job	Worked time (not resettable)	0... 9999 days	0

cAL Group - User calibration group					
Liv	**N°**	**Param**	**Description**	**Values**	**Default**
C	139	AL.P	Adjust Low Point	From -1999 to (AH.P - 10) in engineering units	0
C	140	AL.o	Adjust Low Offset	-300... +300 (E.U.)	0
C	141	AH.P	Adjust High Point	From (AL.P + 10) to 9999 engineering units	999.9
C	142	AH.o	Adjust High Offset	-300... +300	0

OPERATIVE MODES

When the instrument is powered, it starts immediately to work according to the parameters values loaded in its memory. The instrument behaviour and its performance are governed by the value of the stored parameters.

At power ON the instrument can start in one of the following mode depending on its configuration:

Automatic Mode In Automatic mode the instrument drives automatically the control output according to the parameter value set and the set point/measured value.

Manual Mode (OPLO): In Manual mode the the upper display shows the measured value while the lower display shows the power output The lower display shows the power output [preceded by H (for heating) or C (for cooling)], MAN is lit and the instrument allows you to set manually the control output power. No Automatic action will be made.

Stand by Mode (St.bY): In stand-by mode the instrument operates as an indicator. It will show on the upper display the measured value and on the lower display the set point alternately to the “St.bY” messages and forces the control outputs to zero.

We define all the above described conditions as “Standard Display”.

As we have seen, it is always possible to modify the value assigned to a parameter independently from the operative modes selected.

AUTOMATIC MODE

Keyboard function when the instrument is in Auto mode:

	Modo Operatore
	Allows entry into parameter modification procedures
	Allows you to start the “Direct set point modification” function (see below).
	Allows you to display the “additional informations” (see below).
	Performs the action programmed by [121] uSrb (button function during RUN TIME) parameter

Additional information
This instrument is able to show you some additional informations that can help you to manage your system.
The additional informations are related to how the instrument is programmed, hence in many cases, only part of this information is available.

1. When the instrument is showing the “standard display” push button. The lower display will show H or c followed by a number. This value is the current power output applied to the process. The H show you that the action is a Heating action while the "c" show you that the action is a Cooling action
2. Push button again. When the programmer is running the lower display will show the segment currently performed and the Event status as shown below:
   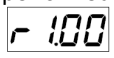 where the first character can be r for a ramp or S for a soak, the next digit show the number of the segment (e.g. S3 means Soak number 3) and the twoless significant digits (LSD) show you the status of the two event (the LSD is the Event 2)..
3. Push button again. When the programmer is running the lower display will show the theoretical remaining time to the end of the program preceded by a "P" letter:
   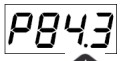
4. Push button again. When the wattmeter function is running the lower display will show U followed by the measured energy..
5. Push button. When the “Worked time count” is running the lower display will show "d" for days or "h" for hours followed by the measured time.
6. Push button. The instrument returns to the "standard display".

Note: The additional information visualization is subject to a time out. If no button is pressed for more than 10 second the instrument comes automatically back to the Standard display..

Direct set point modification
This function allows to modify rapidly the set point value selected by [83] A.SP (selection of the active Set point) or to the set point of the segment group (of the programmer) currently in progress.

1. Push button. The upper display shows the acronym of the selected set point (e.g. SP2) and the lower display will show its value.
2. By and buttons, assign to this parameter the desired value
3. Do not push any button for more than 5 second or push the button. In both cases the instrument memorize the new value and come back to the “standard display”.

Manual mode

This operative mode allows you to deactivate automatic control and manually program the percentage power output to the process. When the instrument is in manual mode, the upper display shows the measured value while the lower display shows the power output [preceded by H (for heating action) or C (for cooling action)] The MAN LED is lit. When manual control is selected, the instrument will start to operate with the same power output as the last one supplied by automatic mode and can be modified using the and buttons.

In case of ON/OFF control, 0% corresponds to the deactivated output while any value different from 0 corresponds to the activated output. As in the case of visualization, the programmable values range from H100 (100% output power with reverse action) to C100 (100% output power with direct action).

Notes:

- During manual mode, the alarms are operative.
- If you set manual modes during program execution, the program will be frozen and it will restart when the instrument will come back to Auto mode.
- If you set manual modes during self-tune execution, the self- tune function will be aborted.
- During manual mode, all functions not related with the control (wattmeter, independent timer, “worked time”, etc) continue to operate normally..

STAND-BY MODE

This operative mode also deactivates the automatic control but forces the control output to zero. In this mode the instrument operates as an indicator. When the instrument is in stand by mode the upper display will show the measured value while the lower display will show alternately the set point and the message “St.bY”.

Notes:

- During stand by mode, the relative alarms are disabled while the absolute alarms are operative or not according to the ALxo (Alarm x enabling during Stand-by mode) parameter setting.
- If you set stand by mode during program execution, the program will be aborted.
- If you set stand by mode during self-tune execution, the self- tune function will be aborted.
- During stand by mode, all functions not related with the control (wattmeter, independent timer, “worked time”, etc) continue to operate normally.
- When the instrument is swapped from stand by to auto modes, the instrument will start automatically the alarm masking, the soft start functions and the auto-tune (if programmed).

AUTOTUNE (EVOTUNE)

Evotune is a fast and fully automatic procedure that can be started in any condition, regardless the deviation from SP. The controller selects automatically the best tune method and computes the optimum PID parameters. To activate Evotune press button for 3 seconds.

ERROR MESSAGES

The upper display shows the OVER-RANGE and UNDERRANGE conditions with the following indications:

Over-range:

Under-range

The sensor break will be signalled as an out of range:

Note: When an over-range or an under-range is detected, the alarms operate as in presence of the maximum or the minimum measurable value respectively.

To check the out of span Error condition, proceed as follows:

1. Check the input signal source and the connecting line.
2. Make sure that the input signal is in accordance with the instrument configuration. Otherwise, modify the input configuration.
3. If no error is detected, send the instrument to your supplier to be checked.

List of possible errors

ErAT Fast Auto-tune cannot start. The measure value is tooclose to the set point. Push the button in order to delete the error message.

ouLd Overload on the out 4. The messages shows that a short circuit is present on the Out 4 when it is used as output or as a transmitter power suply. When the short circuit disappears the output restart to operate..

NoAt Auto-tune not finished within 12 hours.

ErEP Possible problem of the instrument memory. The messages disappears automatically. When the error continues, send the instrument to your supplier.

RonE Possible problem of the firmware memory. When this error is detected, send the instrument to your supplier.

Errt Possible problem of the calibration memory. When this error is detected, send the instrument to your supplier.

FACTORY RESET

Sometime, e.g. when you re-configure an instrument previously used for other works or from other people or when you have made too many errors during configuration and you decided to re-configure the instrument, it is possible to restore the factory configuration. This action allows to put the instrument in a defined condition (the same it was at the first power ON).

The default data are those typical values loaded in the instrument prior to ship it from factory. To load the factory default parameter set, proceed as follows:

1. Press the ↵ button for more than 5 seconds. The upper display will show PASS while the lower display shows 0;
2. Using ▲ and ▼ buttons set the value -481;
3. Push ↵ button;
4. The instrument will turn OFF all LEDs for a few seconds, then the upper display will show dFLt (default) and then all LEDs are turned ON for 2 seconds. At this point the instrument restarts as for a new power ON.

The procedure is complete.

Note: The complete list of the default parameters is available in Chapter "Configuration".