LG/NG70
LGX/NGX70
LG/NG90

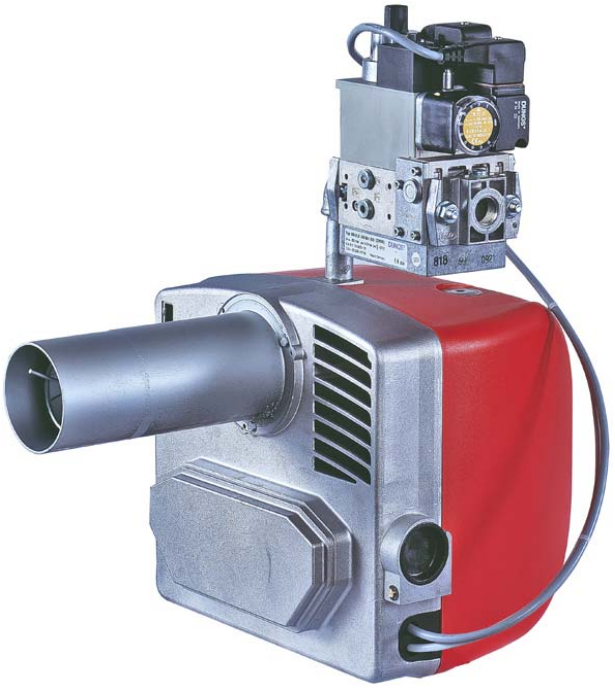

Idea Series
Gas burners

MANUAL OF INSTALLATION - USE - MAINTENANCE

CIB UNIGAS

BURNERS - BRUCIATORI - BRULERS - BRENNER - QUEMADORES - ГОРЕЛКИ

M039135CG Rev. 6.2 07/2020

DANGERS, WARNINGS AND NOTES OF CAUTION

THIS MANUAL IS SUPPLIED AS AN INTEGRAL AND ESSENTIAL PART OF THE PRODUCT AND MUST BE DELIVERED TO THE USER.

INFORMATION INCLUDED IN THIS SECTION ARE DEDICATED BOTH TO THE USER AND TO PERSONNEL FOLLOWING PRODUCT INSTALLATION AND MAINTENANCE.

THE USER WILL FIND FURTHER INFORMATION ABOUT OPERATING AND USE RESTRICTIONS, IN THE SECOND SECTION OF THIS MANUAL. WE HIGHLY RECOMMEND TO READ IT.

CAREFULLY KEEP THIS MANUAL FOR FUTURE REFERENCE.

1) GENERAL INTRODUCTION

- The equipment must be installed in compliance with the regulations in force, following the manufacturer's instructions, by qualified personnel.
- Qualified personnel means those having technical knowledge in the field of components for civil or industrial heating systems, sanitary hot water generation and particularly service centres authorised by the manufacturer.
- Improper installation may cause injury to people and animals, or damage to property, for which the manufacturer cannot be held liable.
- Remove all packaging material and inspect the equipment for integrity.

In case of any doubt, do not use the unit - contact the supplier.

The packaging materials (wooden crate, nails, fastening devices, plastic bags, foamed polystyrene, etc), should not be left within the reach of children, as they may prove harmful.

- Before any cleaning or servicing operation, disconnect the unit from the mains by turning the master switch OFF, and/or through the cut-out devices that are provided.
- Make sure that inlet or exhaust grilles are unobstructed.
- In case of breakdown and/or defective unit operation, disconnect the unit. Make no attempt to repair the unit or take any direct action.

Contact qualified personnel only.

Units shall be repaired exclusively by a servicing centre, duly authorised by the manufacturer, with original spare parts and accessories.

Failure to comply with the above instructions is likely to impair the unit's safety.

To ensure equipment efficiency and proper operation, it is essential that maintenance operations are performed by qualified personnel at regular intervals, following the manufacturer's instructions.

- When a decision is made to discontinue the use of the equipment, those parts likely to constitute sources of danger shall be made harmless.
- In case the equipment is to be sold or transferred to another user, or in case the original user should move and leave the unit behind, make sure that these instructions accompany the equipment at all times so that they can be consulted by the new owner and/or the installer.
- This unit shall be employed exclusively for the use for which it is meant. Any other use shall be considered as improper and, therefore, dangerous.

The manufacturer shall not be held liable, by agreement or otherwise, for damages resulting from improper installation, use and failure to comply with the instructions supplied by the manufacturer.The occurrence of any of the following circustances may cause explosions, polluting unburnt gases (example: carbon monoxide CO), burns, serious harm to people, animals and things:

- Failure to comply with one of the WARNINGS in this chapter
- Incorrect handling, installation, adjustment or maintenance of the burner
- Incorrect use of the burner or incorrect use of its parts or optional supply

2) SPECIAL INSTRUCTIONS FOR BURNERS

- The burner should be installed in a suitable room, with ventilation openings complying with the requirements of the regulations in force, and sufficient for good combustion.
- Only burners designed according to the regulations in force should be used.
- This burner should be employed exclusively for the use for which it was designed.
- Before connecting the burner, make sure that the unit rating is the same as delivery mains (electricity, gas oil, or other fuel).
- Observe caution with hot burner components. These are, usually, near to the flame and the fuel pre-heating system, they become hot during the unit operation and will remain hot for some time after the burner has stopped.

When the decision is made to discontinue the use of the burner, the user shall have qualified personnel carry out the following operations:

a Remove the power supply by disconnecting the power cord from the mains.

b Disconnect the fuel supply by means of the hand-operated shut-off valve and remove the control handwheels from their spindles.

Special warnings

- Make sure that the burner has, on installation, been firmly secured to the appliance, so that the flame is generated inside the appliance fire-box.
- Before the burner is started and, thereafter, at least once a year, have qualified personnel perform the following operations:

a set the burner fuel flow rate depending on the heat input of the appliance;

b set the flow rate of the combustion-supporting air to obtain a combustion efficiency level at least equal to the lower level required by the regulations in force;

c check the unit operation for proper combustion, to avoid any harmful or polluting unburnt gases in excess of the limits permitted by the regulations in force;

d make sure that control and safety devices are operating properly;

e make sure that exhaust ducts intended to discharge the products of combustion are operating properly;

f on completion of setting and adjustment operations, make sure that all mechanical locking devices of controls have been duly tightened;

g make sure that a copy of the burner use and maintenance instructions is available in the boiler room.

- In case of a burner shut-down, reser the control box by means of the RESET pushbutton. If a second shut-down takes place, call the Technical Service, **without trying to RESET further**.
- The unit shall be operated and serviced by qualified personnel only, in compliance with the regulations in force.

3) GENERAL INSTRUCTIONS DEPENDING ON FUEL USED

3a) ELECTRICAL CONNECTION

- For safety reasons the unit must be efficiently earthed and installed as required by current safety regulations.
- It is vital that all saftey requirements are met. In case of any doubt, ask for an accurate inspection of electrics by qualified personnel, since the manufacturer cannot be held liable for damages that may be caused by failure to correctly earth the equipment.
- Qualified personnel must inspect the system to make sure that it is adequate to take the maximum power used by the equipment shown on the equipment rating plate. In particular, make sure that the system cable cross section is adequate for the power absorbed by the unit.
- No adaptors, multiple outlet sockets and/or extension cables are permitted to connect the unit to the electric mains.
- An omnipolar switch shall be provided for connection to mains, as required by the current safety regulations.
- The use of any power-operated component implies observance of a few basic rules, for example:
  - do not touch the unit with wet or damp parts of the body and/or with bare feet;
  - do not pull electric cables;
  - do not leave the equipment exposed to weather (rain, sun, etc.) unless expressly required to do so;
  - do not allow children or inexperienced persons to use equipment;
- The unit input cable shall not be replaced by the user.
  In case of damage to the cable, switch off the unit and contact qualified personnel to replace.
  When the unit is out of use for some time the electric switch supplying all the power-driven components in the system (i.e. pumps, burner, etc.) should be switched off.

3b) FIRING WITH GAS, LIGHT OIL OR OTHER FUELS

GENERAL

- The burner shall be installed by qualified personnel and in compliance with regulations and provisions in force; wrong installation can cause injuries to people and animals, or damage to property, for which the manufacturer cannot be held liable.
- Before installation, it is recommended that all the fuel supply system pipes be carefully cleaned inside, to remove foreign matter that might impair the burner operation.
- Before the burner is commissioned, qualified personnel should inspect the following:

a the fuel supply system, for proper sealing;
b the fuel flow rate, to make sure that it has been set based on the firing rate required of the burner;
c the burner firing system, to make sure that it is supplied for the designed fuel type;
d the fuel supply pressure, to make sure that it is included in the range shown on the rating plate;
e the fuel supply system, to make sure that the system dimensions are adequate to the burner firing rate, and that the system is equipped with all the safety and control devices required by the regulations in force.

- When the burner is to remain idle for some time, the fuel supply tap or taps should be closed.

SPECIAL INSTRUCTIONS FOR USING GAS

Have qualified personnel inspect the installation to ensure that:

a the gas delivery line and train are in compliance with the regulations and provisions in force;
b all gas connections are tight;
c the boiler room ventilation openings are such that they ensure the air supply flow required by the current regulations, and in any case are sufficient for proper combustion.

- Do not use gas pipes to earth electrical equipment.
- Never leave the burner connected when not in use. Always shut the gas valve off.
- In case of prolonged absence of the user, the main gas delivery valve to the burner should be shut off.

Precautions if you can smell gas

a do not operate electric switches, the telephone, or any other item likely to generate sparks;
b immediately open doors and windows to create an air flow to purge the room;
c close the gas valves;
d contact qualified personnel.

- Do not obstruct the ventilation openings of the room where gas appliances are installed, to avoid dangerous conditions such as the development of toxic or explosive mixtures.

DIRECTIVES AND STANDARDS

Gas burners

European directives

-Regulation 2016/426/UE (appliances burning gaseous fuels)
-2014/35/UE (Low Tension Directive)
-2014/30/UE (Electromagnetic compatibility Directive)
-2006/42/EC (Machinery Directive)

Harmonized standards

-UNI EN 676 (Automatic forced draught burners for gaseous fuels)
-EN 55014-1 (Electromagnetic compatibility- Requirements for house hold appliances, electric tools and similar apparatus)
-EN 60204-1:2006 (Safety of machinery – Electrical equipment of machines.)
-CEI EN 60335-1 (Specification for safety of household and similar electrical appliances);
-CEI EN 60335-2-102 (Household and similar electrical appliances. Safety. Particular requirements for gas, oil and solid-fuel burning appliances having electrical connections).
-UNI EN ISO 12100:2010 (Safety of machinery - General principles for design - Risk assessment and risk reduction);

Light oil burners

European directives

-2014/35/UE (Low Tension Directive)
-2014/30/UE (Electromagnetic compatibility Directive)
-2006/42/EC (Machinery Directive)

Harmonized standards

-UNI EN 267-2011(Automatic forced draught burners for liquid fuels)
-EN 55014-1 (Electromagnetic compatibility- Requirements for house hold appliances, electric tools and similar apparatus)
-EN 60204-1:2006 (Safety of machinery – Electrical equipment of machines.)
-CEI EN 60335-1 (Specification for safety of household and similar electrical appliances);
-CEI EN 60335-2-102 (Household and similar electrical appliances. Safety. Particular requirements for gas, oil and solid-fuel burning appliances having electrical connections).
-UNI EN ISO 12100:2010 (Safety of machinery - General principles for design - Risk assessment and risk reduction);

Heavy oil burners

European Directives

-2014/35/UE (Low Tension Directive)
-2014/30/UE (Electromagnetic compatibility Directive)
-2006/42/EC (Machinery Directive)

Harmonized standards

-UNI EN 267(Automatic forced draught burners for liquid fuels)
-EN 55014-1 (Electromagnetic compatibility- Requirements for house hold appliances, electric tools and similar apparatus)
-EN 60204-1:2006 (Safety of machinery – Electrical equipment of machines.)
-CEI EN 60335-1 (Specification for safety of household and similar electrical appliances);
-CEI EN 60335-2-102 (Household and similar electrical appliances. Safety. Particular requirements for gas, oil and solid-fuel burning appliances having electrical connections).
-UNI EN ISO 12100:2010 (Safety of machinery - General principles for design - Risk assessment and risk reduction);

Gas - Light oil burners

European Directives

-Regulation 2016/426/UE (appliances burning gaseous fuels)
-2014/35/UE (Low Tension Directive)
-2014/30/UE (Electromagnetic compatibility Directive)
-2006/42/EC (Machinery Directive)

Harmonized standards

-UNI EN 676 (Automatic forced draught burners for gaseous fuels)
-UNI EN 267(Automatic forced draught burners for liquid fuels)
-EN 55014-1 (Electromagnetic compatibility- Requirements for house hold appliances, electric tools and similar apparatus)
-EN 60204-1:2006 (Safety of machinery – Electrical equipment of machines.)
-CEI EN 60335-1 (Specification for safety of household and similar electrical appliances);
-CEI EN 60335-2-102 (Household and similar electrical appliances. Safety. Particular requirements for gas, oil and solid-fuel burning appliances having electrical connections).
-UNI EN ISO 12100:2010 (Safety of machinery - General principles for design - Risk assessment and risk reduction);

Gas - Heavy oil burners

European directives:

-Regulation 2016/426/UE (appliances burning gaseous fuels)
-2014/35/UE (Low Tension Directive)
-2014/30/UE (Electromagnetic compatibility Directive)
-2006/42/EC (Machinery Directive)

Harmonized standards

-UNI EN 676 (Automatic forced draught burners for gaseous fuels)
-EN 55014-1 (Electromagnetic compatibility- Requirements for house hold appliances, electric tools and similar apparatus)
-EN 60204-1:2006 (Safety of machinery – Electrical equipment of machines.)
-CEI EN 60335-1 (Specification for safety of household and similar electrical appliances);
-CEI EN 60335-2-102 (Household and similar electrical appliances. Safety. Particular requirements for gas, oil and solid-fuel burning appliances having electrical connections).
-UNI EN ISO 12100:2010 (Safety of machinery - General principles for design - Risk assessment and risk reduction);

Industrial burners

European directives

-Regulation 2016/426/UE (appliances burning gaseous fuels)
-2014/35/UE (Low Tension Directive)
-2014/30/UE (Electromagnetic compatibility Directive)
-2006/42/EC (Machinery Directive)

Harmonized standards

-EN 55014-1 (Electromagnetic compatibility- Requirements for house hold appliances, electric tools and similar apparatus)
-EN 746-2 (Industrial thermoprocessing equipment - Part 2: Safety requirements for combustion and fuel handling systems)
-UNI EN ISO 12100:2010 (Safety of machinery - General principles for design - Risk assessment and risk reduction);
-EN 60204-1:2006 (Safety of machinery – Electrical equipment of machines.)
-EN 60335-2 (Electrical equipment of non-electric appliances for household and similar purposes. Safety requirements)

Burner data plate

For the following information, please refer to the data plate:

- burner type and burner model: must be reported in any communication with the supplier
- burner ID (serial number): must be reported in any communication with the supplier
- date of production (year and month)
- information about fuel type and network pressure

Type	--
Model	--
Year	--
S.Number	--
Output	--
Oil Flow	--
Fuel	--
Category	--
Gas Pressure	--
Viscosity	--
El.Supply	--
El.Consump.	--
Fan Motor	--
Protection	--
Drwaing n°	--
P.I.N.	--

SYMBOLS USED

WARNING! Failure to observe the warning may result in irreparable damage to the unit or damage to the environment

DANGER! Failure to observe the warning may result in serious injuries or death.

WARNING! Failure to observe the warning may result in electric shock with lethal consequences

Figures, illustrations and images used in this manual may differ in appearance from the actual product.

BURNER SAFETY

The burners - and the configurations described below - comply with the regulations in force regarding health, safety and the environment. For more in-depth information, refer to the declarations of conformity that are an integral part of this Manual.

DANGER! Incorrect motor rotation can seriously damage property and injure people.

Residual risks deriving from misuse and prohibitions

The burner has been built in order to make its operation safe; there are, however, residual risks.

Do not touch any mechanical moving parts with your hands or any other part of your body. Injury hazard
Do not touch any parts containing fuel (i.e. tank and pipes). Scalding hazard
Do not use the burner in situations other than the ones provided for in the data plate.
Do not use fuels other than the ones stated.
Do not use the burner in potentially explosive environments.
Do not remove or by-pass any machine safety devices.
Do not remove any protection devices or open the burner or any other component while the burner is running.
Do not disconnect any part of the burner or its components while the burner is running.
Untrained staff must not modify any linkages.

After any maintenance, it is important to restore the protection devices before restarting the machine.
All safety devices must be kept in perfect working order.
Personnel authorized to maintain the machine must always be provided with suitable protections.

ATTENTION: while running, the parts of the burner near the generator (coupling flange) are subject to overheating. Where necessary, avoid any contact risks by wearing suitable PPE.

PART I - INSTALLATION

Burner model identification

Burners are identified by burner type and model. Burner model identification is described as follows.

Type**NG90** Model	**M-.**	**AB.**	**S.**	***.**	**A.**	**0.**	**15**
(1)	(2)	(3)	(4)	(5)	(6)	(7)	(8)

(1) BURNER TYPE	NG - Natural gas burner LG - L.P.G. burner LGX - Natural gas Low NOx burners NGX - Natural gas Low NOx burners
(2) FUEL	M - Natural gas L - LPG
(3) OPERATION	TN - Single stage AB - Double stage
(4) BLAST TUBE	S - Standard L - Extended
(5) DESTINATION COUNTRY	* - see data plate
(6) BURNER VERSION	A = StandardStandard
(7) EQUIPMENT	0 = 2 gas valves 1= 2 Gas valves + gas proving system (option)
(8) GAS CONNECTION	10= 3/8” = Rp1/2 15= 1/2” = Rp1/2 20= 3/4” = Rp3/4

Specifications

BURNERS		**NG70 M-.TN...10**	**NG70 M-.TN...15**	**NG90 M-.TN...10**	**NG90 M-.TN...15**	**NG90 M-.TN...20**
Output	min. - max. kW	30 - 70		40 - 85		
Fuel		Natural gas				
Category		(see next paragraph)				
Gas rate	min.-max. (Stm³/h)	3,2 - 7,4		4,2 - 9,0		
Gas pressure	min.-max. mbar	(see Note 2)				
Power supply		230V 1N.ac - 50 Hz				
Total power consumption	kW	0,40				
Electric motor	kW	0,10				
Protection		IP40				
Approx. weight	kg	14				
Valves size / Gas connection		3/8 / ”Rp1/2	1/2” / Rp1/2	3/8” / Rp1/2	1/2” / Rp1/2	3/4” / Rp3/4
Operation		Single stage				
Operating temperature	°C	-10 ÷ +50				
Storage TemperatureStorage Temperature	°C	-20 ÷ +60				
Working serviceWorking service*		IntermittentIntermitent				

BURNERS		**NG70 M-.AB...10**	**NG70 M-.AB...15**	**NG90 M-.AB...10**	**NG90 M-.AB...15**	**NG90 M-.AB...20**
Output	min. - max. kW	19 - 68		22 - 85		
Fuel		Natural gas				
Category		(see next paragraph)				
Gas rate	min.-max. (Stm³/h)	2 - 7		2,3 - 9		
Gas pressure	min.-max. mbar	(see Note 2)				
Power supply		230V 1N.ac - 50 Hz				
Total power consumption	kW	0.40				
Electric motor	kW	0,10				
Protection		IP40				
Approx. weight	kg	14				
Valves size - Gas connection		3/8” - Rp1/2	1/2” - Rp1/2	1/2” - Rp1/2	1/2” - Rp1/2	3/4” - Rp3/4
Operation		High-low flame				
Operating temperature	°C	-10 ÷ +50				
Storage TemperatureStorage Temperature	°C	-20 ÷ +60				
Working serviceWorking service*		IntermittentIntermitent				

BURNERS		LG70 L-.TN...10	LG70 L-.TN...15	LG90 L-.TN...10	LG90 L-.TN...15
Output	min. - max. kW	30 - 70		40 - 85	
Fuel		L.P.G.	L.P.G.	L.P.G.	L.P.G.
Category		$I_{3B/P}$			
Gas rate	min.-max. (Stm³/h)	1,2 - 2,7		1,5 - 3,3	
Gas pressure	min.-max. mbar	(see Note 2)			
Power supply		230V 1N.ac - 50 Hz			
Total power consumption	kW	0,40			
Electric motor	kW	0,10			
Protection		IP40			
Approx. weight	kg	14			
Valves size / Gas connection		3/8" / Rp1/2	1/2" / Rp1/2	3/8" / Rp1/2	1/2" / Rp1/2
Operation		Single stage			
Operating temperature	°C	-10 ÷ +50			
Storage TemperatureStorage Temperature	°C	-20 ÷ +60			
Working serviceWorking service*		IntermittentIntermittentIntermitent			

BURNERS		LG70 L-.AB...10	LG70 L-.AB...15	LG90 L-.AB...10	LG90 L-.AB...15
Output	min. - max. kW	20 - 65		22 - 80	
Fuel		L.P.G.			
Category		$I_{3B/P}$			
Gas rate	min.-max. (Stm³/h)	0,8 - 2,5	0,8 - 2,5	0,8 - 3,0	0,8 - 3,0
Gas pressure	min.-max. mbar	(see Note 2)			
Power supply		230V 1N.ac- 50 Hz			
Total power consumption	kW	0.40			
Electric motor	kW	0.10			
Protection		IP40			
Approx. weight	kg	14			
Valves size / Gas connection		3/8" / Rp1/2	1/2" / Rp1/2	1/2" / Rp1/2	1/2" / Rp1/2
Operation		High-low flame			
Operating temperature	°C	-10 ÷ +50			
Storage TemperatureStorage Temperature	°C	-20 ÷ +60			
Working serviceWorking service*		IntermittentIntermittentIntermitent			

Low NOx burners

BURNERS		NGX70 M-.TN...15	NGX70 M-.TN...20	LGX70 M-.TN...15	LGX70 M-.TN...20	NGX70 M-.AB...15	NGX70 M-.AB...20
Output	min. - max. kW	40 - 65				21 - 65	
Fuel		Natural gas		$I_{3B/P}$		Natural gas	
Category		(see next paragraph)					
Gas rate	min.-max. (Stm³/h)	4.2 - 6,9		1,5 - 2,4		2,2 - 6,9	
Gas pressure	min.-max. mbar	(see Note 2)					
Power supply		230V 1N.ac - 50 Hz					
Total power consumption	kW	0,40					
Electric motor	kW	0,10					
Protection		IP40					
Approx. weight	kg	14					
Valves size / Gas connection		3/8" / Rp1/2	1/2" / Rp1/2	3/8" / Rp1/2	1/2" / Rp1/2	3/8" / Rp1/2	1/2" / Rp1/2
Operation		Single stage		Single stage		High-low flame	
	°C	-10 ÷ +50					
Storage TemperatureStorage Temperature	°C	-20 ÷ +60					
Working serviceWorking service*		IntermittentIntermittentIntermitent					

Note1:	**All gas flow rates are referred to Stm^3/h (1013 mbar absolute pressure, 15 °C temperature) and are valid for G20 gas (nett calorific value H_i = 34.02 MJ/Stm^3); for L.P.G. (nett calorific value H_i = 93.5 MJ/Stm^3)**
Note2:	**Maximum gas pressure = 65mbar (with Dungs MBC 65 DLE valves)** **Maximum gas pressure = 360mbar (with Dungs MB-DLE valves)** **Minimum gas pressure = see gas curves.**

*** NOTE ON THE WORKING SERVICE: the control box automatically stops after 24h of continuous working. The control box immediately starts up, automatically.**

Country and usefulness gas categories

GAS CAT	COUNTRY																								
I_{2H}	AT	ES	GR	SE	FI	IE	HU	IS	NO	CZ	DK	GB	IT	PT	CY	EE	LV	SI	MT	SK	BG	LT	RO	TR	CH
I_{2E}	LU	PL	-	-	-	-	-	-	-	-	-	-	-	-	-	-	-	-	-	-	-	-	-	-	-
$I_{2E(R}$	BE	-	-	-	-	-	-	-	-	-	-	-	-	-	-	-	-	-	-	-	-	-	-	-	-
(*)	NL	-	-	-	-	-	-	-	-	-	-	-	-	-	-	-	-	-	-	-	-	-	-	-	-
I_{2ELL}	DE	-	-	-	-	-	-	-	-	-	-	-	-	-	-	-	-	-	-	-	-	-	-	-	-
I_{2Er}	FR	-	-	-	-	-	-	-	-	-	-	-	-	-	-	-	-	-	-	-	-	-	-	-	-

(*) Only for I_{2EK} : the appliance was configured for the appliance category K (I2K) and is suitable for the use of G and G+ distribution gases according to the specifications as included in the NTA 8837:2012 Annex D with a Wobbe index of 43.46 – 45.3 MJ/m3 (dry, 0 °C, upper value) or 41.23 – 42.98 (dry, 15 °C, upper value). This appliance can moreover be converted and/or be calibrated for the appliance category E (I2E). This therefore implies that the appliance "is suitable for G+ gas and H gas or is demonstrably suitable for G+ gas and can demonstrably be made suitable for H gas" within the meaning of the "Dutch Decree of 10 May 2016 regarding amendment of the Dutch Gas Appliances Decree and the Dutch Commodities (Administrative Fines) Act in connection with the changing composition of gas in the Netherlands as well as technical amendment of some other decrees.

OVERALL DIMENSIONS (mm) (NG70 - NG90)

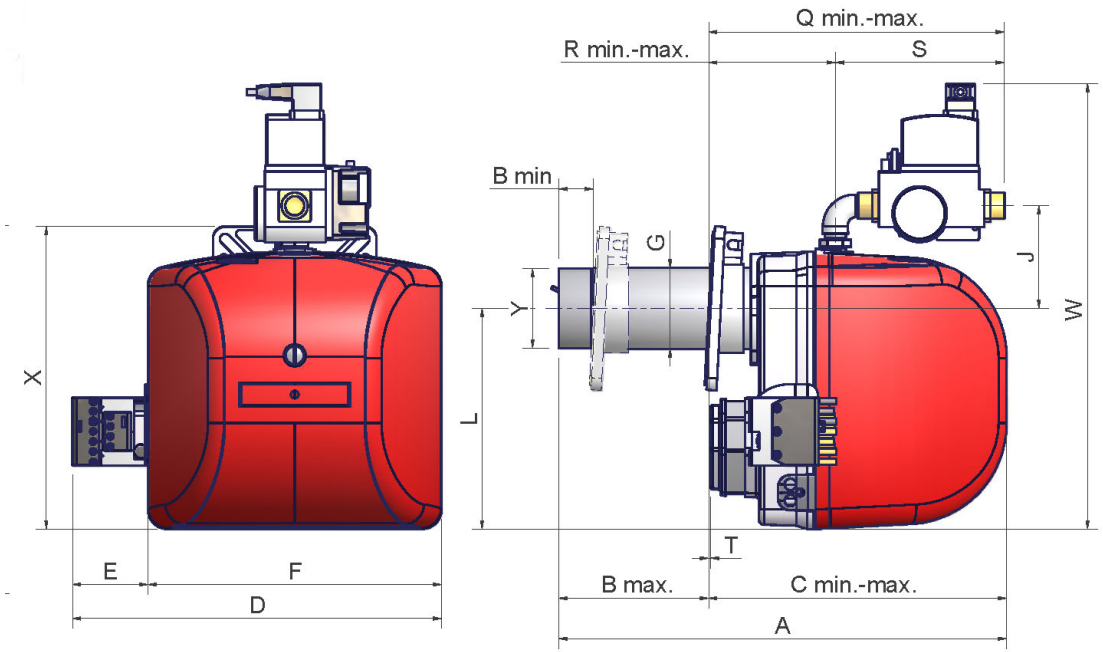

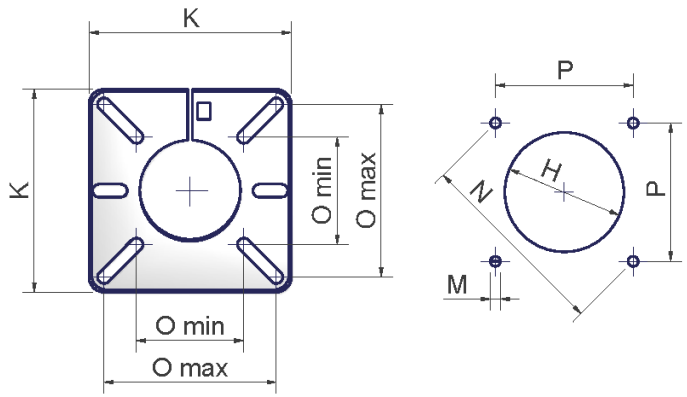

Burner flange and boiler drilling template

	Rp	A	B		C		D	E	F	G	H	J	K	L	M	N	O		P	Q		R		S	Tmin.	W	X	Y
			min.	max.	min.	max.											min.	max.		min.	max.	min.	max.					
NG70 ..S..	1/2"	365	34	79	287	332	365	75	291	Ø80	Ø95	99	162	218	M8	155	86	138	110	285	330	118	163	168	14	438	299	Ø78,5
NG70 ..L..	1/2"	443	34	157	287	410	365	75	291	Ø80	Ø95	99	162	218	M8	155	86	138	110	285	408	118	241	168	14	438	299	Ø78,5
NG90 ..S..	1/2"	365	34	70	295	331	365	75	291	Ø80	Ø95	102	162	218	M8	155	86	138	110	293	329	125	203	168	2	441	299	Ø78,5
NG90 ..L..	1/2"	443	34	149	295	409	365	75	291	Ø80	Ø95	102	162	218	M8	155	86	138	110	293	407	125	239	168	2	441	299	Ø78,5

BS = standard blast tube BL = long blast tube DN = gas valves size

B*: SPECIAL blast tube lengths must be agreed with **Cib Unigas**

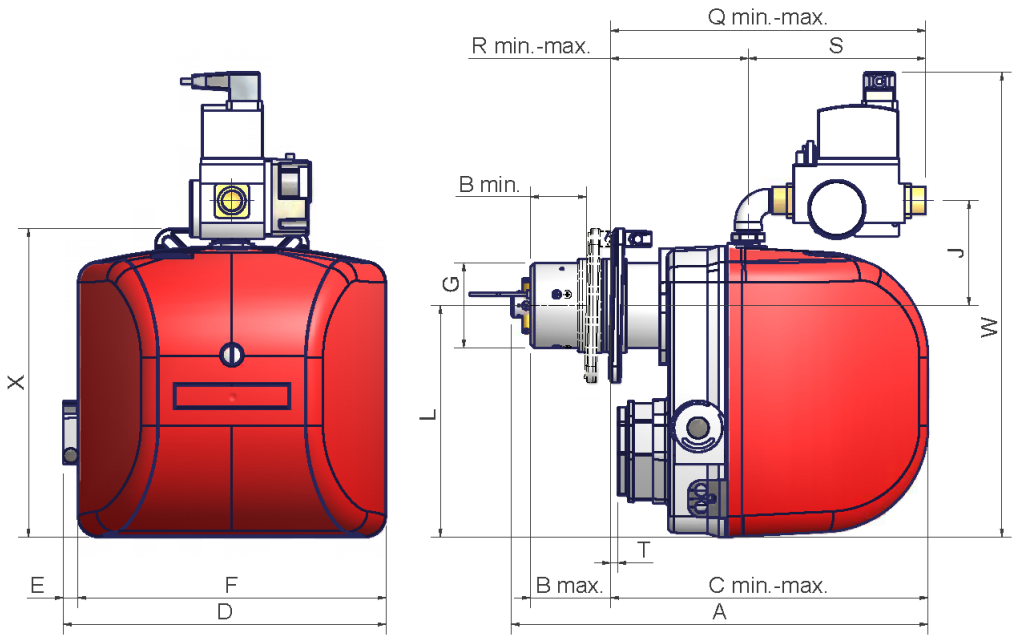

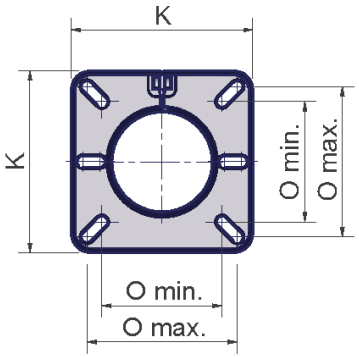

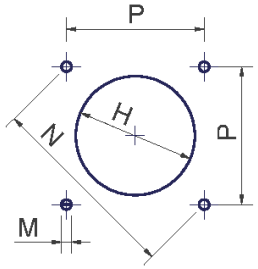

Burner flange and boiler drilling template

			A	B		C		D	E	F	G	H	J	K	L	M	N	O		P	Q		R		S	T	W	X
				min.	max.	min.	max.											min.	max.		min.	max.	min.	max.				
Blast tube	**Standard**	**LGX-NGX70**	383	76	76	299	299	304	14	291	Ø80	Ø98	99	145	218	M8	153	96	120	108	296	296	130	130	167	7	438	291
	Extended	**LGX-NGX70**	451	66	149	294	377	304	14	291	Ø80	Ø98	99	145	218	M8	153	96	120	108	292	375	125	208	167	2	438	291

BS = standard blast tube BL = long blast tube DN = gas valves size
B*: SPECIAL blast tube lengths must be agreed with **Cib Unigas**

Performance curves

L.P.G. Burners

NG70 M-.TN...

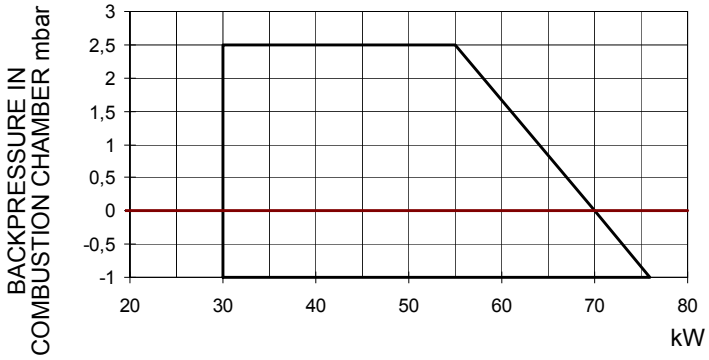

NG70 M-.AB...

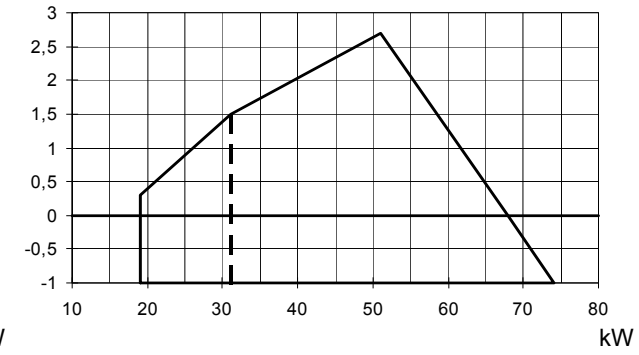

NG90 M-.TN...

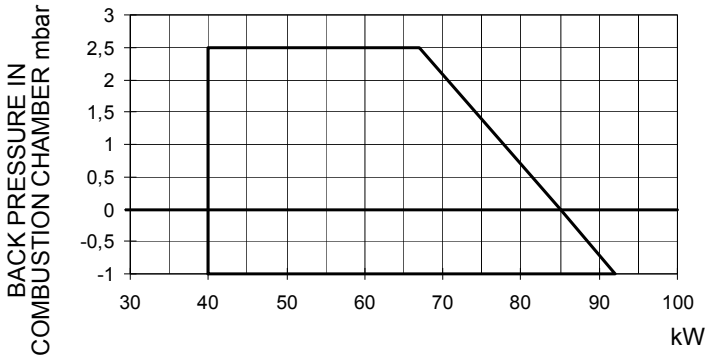

NG90 M-.AB...

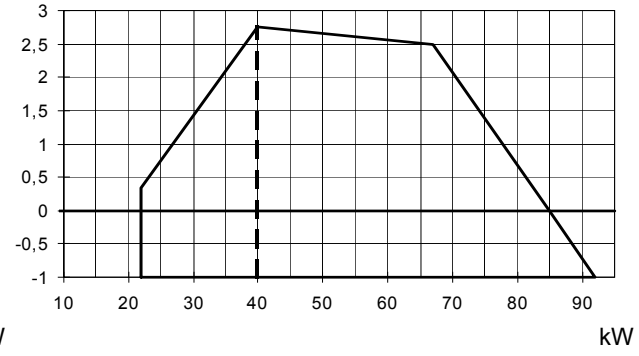

L.P.G. Burners

LG70 L-.TN...

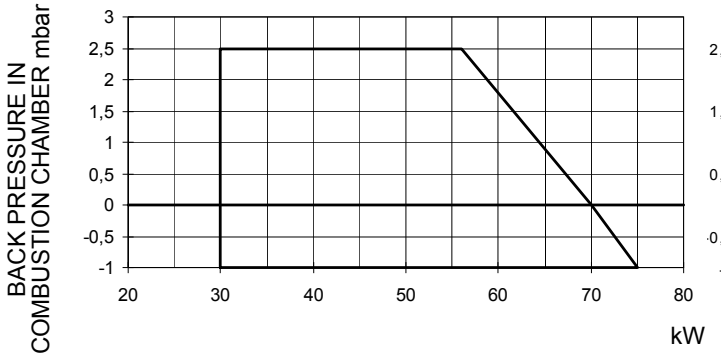

LG70 L-.AB...

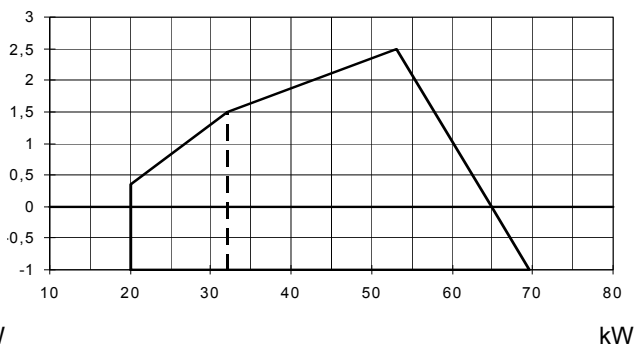

LG90 L-.TN...

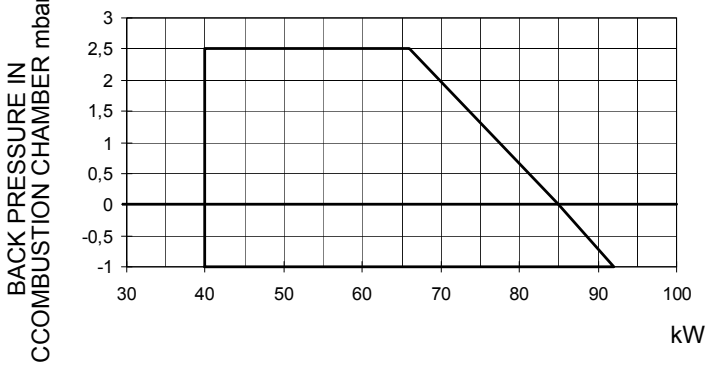

LG90 L-.AB...

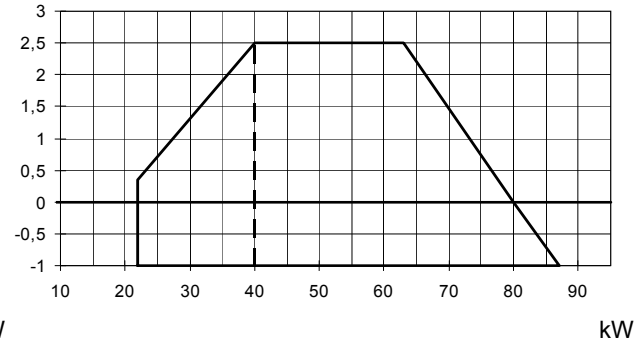

Low NOx burners

NGX70 M-.TN...

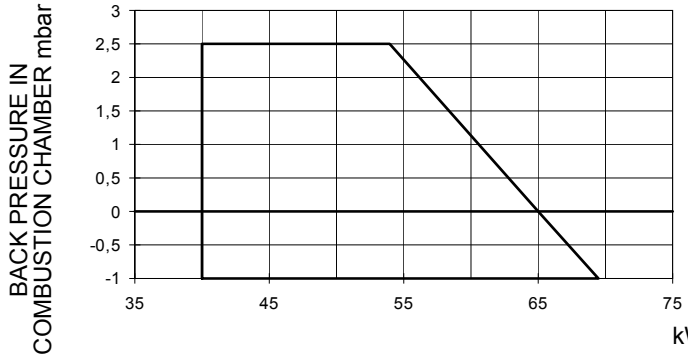

NGX70 M-.AB...

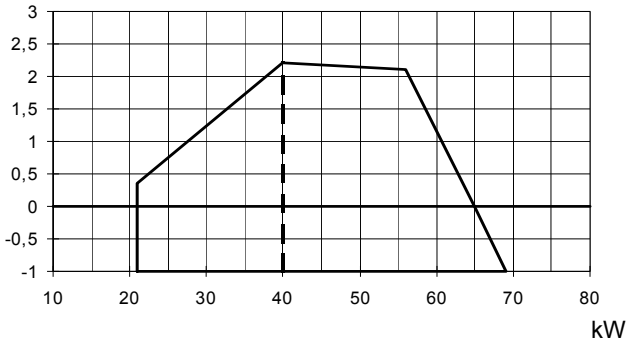

To get the input in kcal/h, multiply value in kW by 860.

Data are referred to standard conditions: atmospheric pressure at 1013mbar, ambient temperature at 15°C.

Pressure in the network / gas flow rate curves

L.P.G. Burners

NG70 M-.TN...

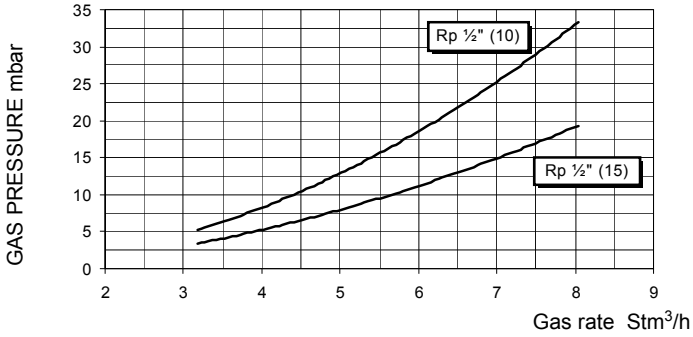

NG70 M-.AB...

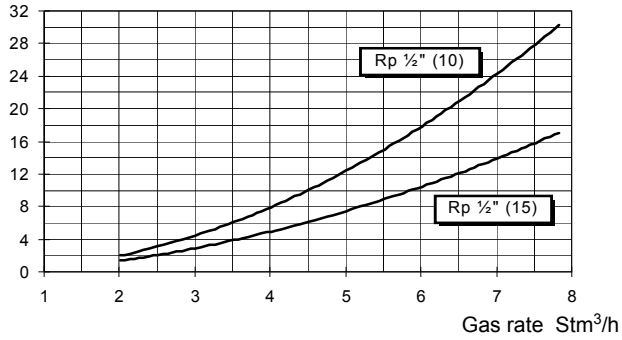

NG90 M-.TN...

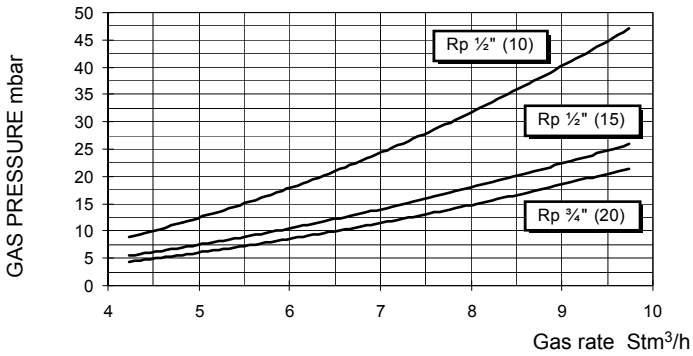

NG90 M-.AB...

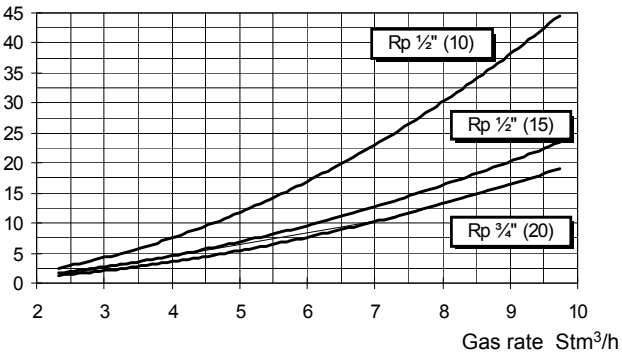

L.P.G. Burners

LG70 L-.TN...

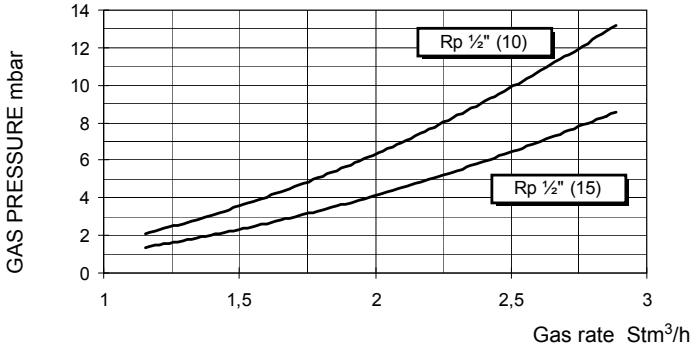

LG70 L-.AB...

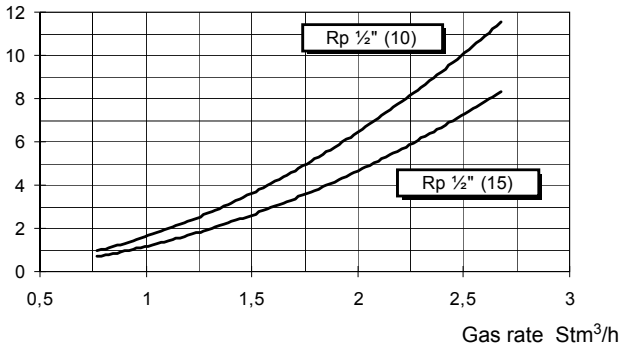

LG90 L-.TN...

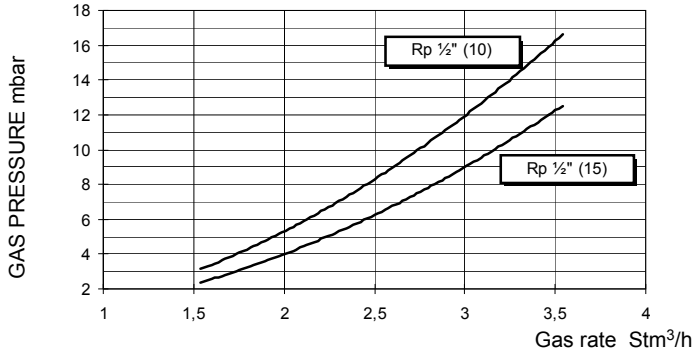

LG90 L-.AB...

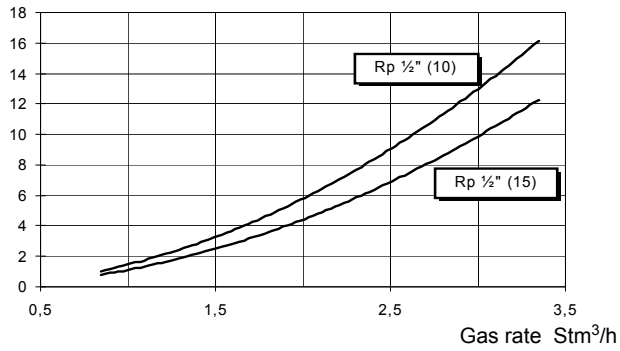

Low NOx burners

NGX70 M-.TN...

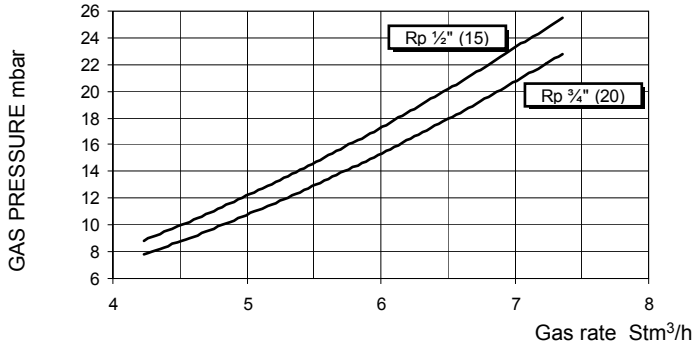

NGX70 M-.AB...

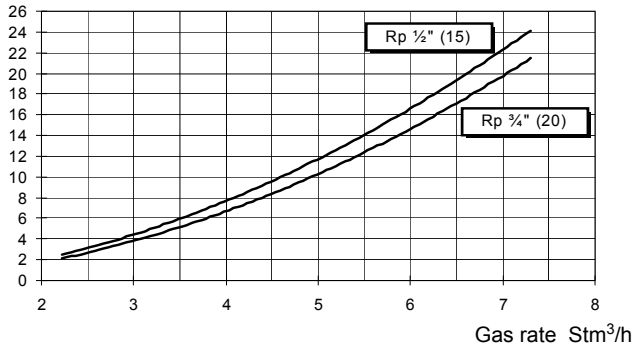

The values in the diagrams refer to **natural gas** with a calorific value of 8125 kcal/Stm^3 (15°C, 1013 mbar) and a density of 0.714 kg/Stm^3 .

The values in the diagrams refer to **GPL** with a calorific value of 22300 kcal/Stm^3 (15°C, 1013 mbar) and a density of 2.14 kg/Stm^3. When the calorific value and the density change, the pressure values should be adjusted accordingly.

$$\Delta p2 = \Delta p1 \quad * \left(\frac{Q2}{Q1}\right)^2 * \left(\frac{\rho 2}{\rho 1}\right)$$

Where:

$p1$	Natural gas pressure shown in diagram
$p2$	Real gas pressure
$Q1$	Natural gas flow rate shown in diagram
$Q2$	Real gas flow rate
$\rho 1$	Natural gas density shown in diagram
$\rho 2$	Real gas density

MOUNTINGS AND CONNECTIONS

PackingThe burners are despatched in cardboard packages whose dimensions are: 400mm x 300mm x 520mm (L x P x H)

Packing cases of this type are affected by humidity; the maximum number of cases to be stacked is indicated outside the packing.

The following are placed in each packing case.

1 Burner with gas train;

1 gasket to be inserted between the burner and the boiler;

1 envelope containing this manual

When disposing of the burner packing and if the packing is scrapped follow the procedures laid down in the current legislation regarding the disposal of materials.***Fitting the burner to the boiler***

To install the burner into the boiler, proceed as follows:

1 on the boiler's door hole, fix the 4 stud bolts according to the drilling template showed on paragraph "Overall dimensions"

2 fix the flange of the burner to the boiler;

3 install the burner into the boiler;

4 according to the reference showed on Fig. 2, fix the flange to the boiler's stud bolts **D**, without completely fastening;

5 loosen the **VS** screws in order to let the blast tube move back and forth;

6 install the burner making the blast tube move into the flange as to reach the right position according to the boiler/utilisation

7 fasten the **VS** screws:

8 tighten the 4 stud blolts **D** completely;

9 seal the space between the blast tube and the refractory lining with appropriate insulating material (ceramic fibre cord or refractory cement).

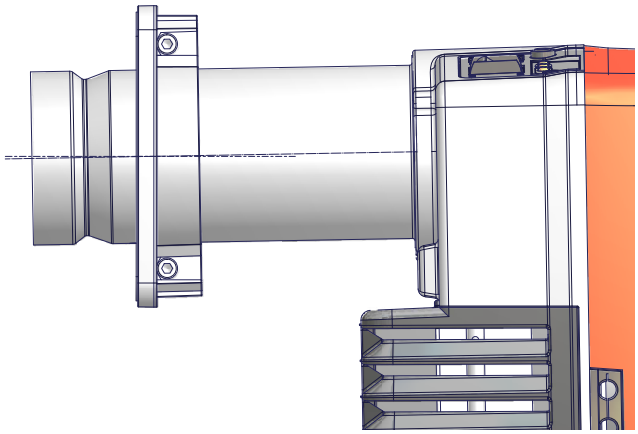

Fig. 1

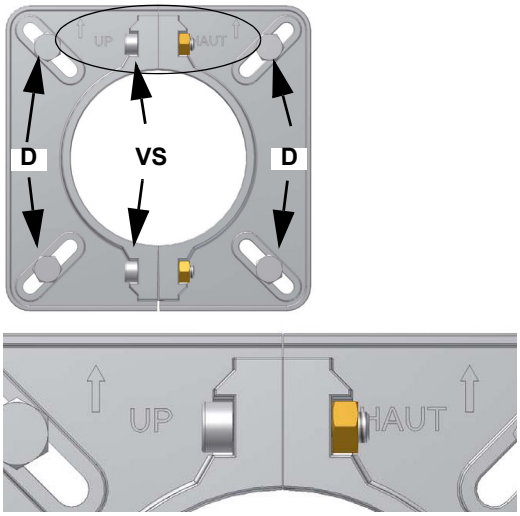

Fig. 2

Matching the burner to the boiler

The burners described in this manual have been tested with combustion chambers that comply with EN676 regulation and whose dimensions are described in the diagram . In case the burner must be coupled with boilers with a combustion chamber smaller in diameter or shorter than those described in the diagram, please contact the supplier, to verify that a correct matching is possible, with respect of the application involved. To correctly match the burner to the boiler verify the necessary input and the pressure in combustion chamber are included in the burner performance curve; otherwise the choice of the burner must be revised consulting the burner manufacturer. To choose the blast tube lenght follow the instructions of the boiler manufacturer. In absence of these consider the following:

- Cast-iron boilers, three pass flue boilers (with the first pass in the rear part): the blast tube must protrude no more than 100 mm into the combustion chamber.
- Pressurised boilers with flame reversal: in this case the blast tube must penetrate at least 50 - 100 mm into combustion chamber in respect to the tube bundle plate.

The length of the blast tubes does not always allow this requirement to be met, and thus it may be necessary to use a suitably-sized

spacer to move the burner backwards or to design a blast tube tha suites the utilisation (please, contact the manifacturer).

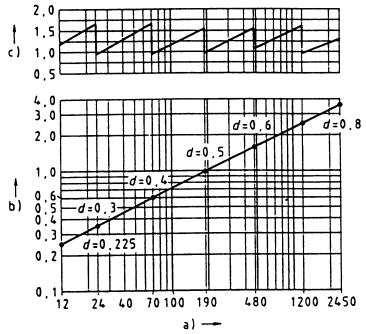

Fig. 3

Key

a) Heat output in kW

b) Length of the flame tube in meters

c) Flame tube firing intensity in MW/m^3

d) Combustion chamber diameter (m)

Fig. 3 - Firing intensity, diameter and lenght of the test flame tube as a function of the heat input in kW.

Installing the gas train

⚠	**ATTENTION:** BEFORE EXECUTING THE CONNECTIONS TO THE GAS PIPE NETWORK, BE SURE THAT THE MANUAL CUTOFF VALVES ARE CLOSED. READ CAREFULLY THE “WARNINGS” CHAPTER AT THE BEGINNING OF THIS MANUAL.

The following diagram shows the gas train components which are included in the delivery and those which must be fitted by the customer. The diagram complies with regulations in force.

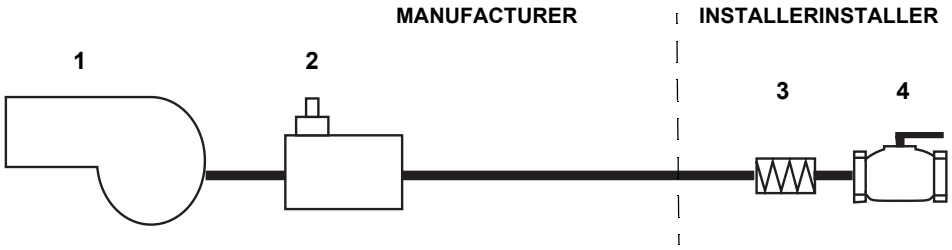

Keys

1 Burner

2 Multibloc valves group: Multibloc DUNGS (2 gas valves + gas pressure switch + filter + pressure governor)

3 Bellow joint

4 Manual cutoff valve

Once the train is installed, connect the gas valves group plug.

⚠	**ATTENTION:** once the gas train is mounted according to the diagram, the gas proving test mus be performed, according to the procedure set by the laws in force.

ELECTRICAL CONNECTIONS

⚠	**Respect the basic safety rules. make sure of the connection to the earthing system. do not reverse the phase and neutral connections. fit a differential thermal magnet switch adequate for connection to the mains.**
	ATTENTION: before executing the electrical connections, pay attention to turn the plant's switch to OFF and be sure that the burner's main switch is in 0 position (OFF) too. Read carefully the chapter "WARNINGS", and the "Electrical connections" section.

To execute the electrical connections, proceed as follows:

find the pulg or the plugs, according to the model, that comes out from the burnrer:

- 7 pins plug for the power supply (for all models);
- 4 pins plug (double-stage burners);

⚠	**WARNING: if the cable that connects the thermostats and the control box should be longer than 3 meters, insert a sectioning relay following the attached electrical wiring diagram.**

Connectors identification

Burner power supply connector

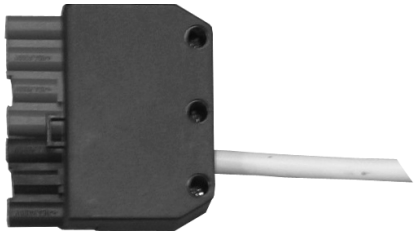

HIGH/LOW flame connector

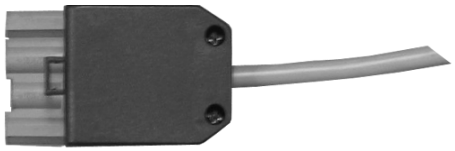

Single stage burner connector

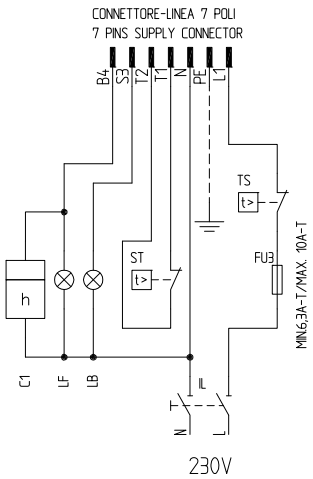

7-pins connector

Double-stage burner connectors

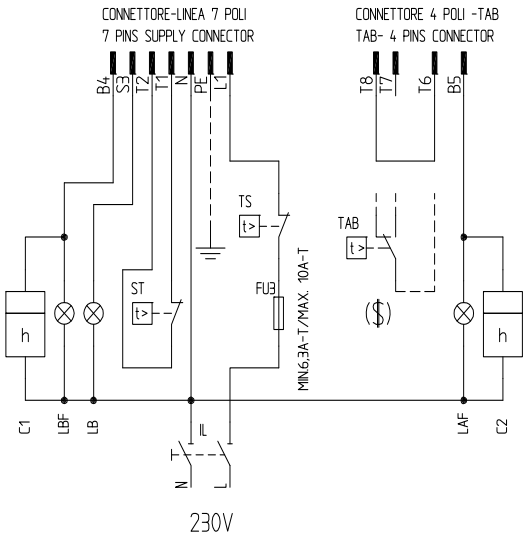

7-pins and 4-pins connectors

Key

C1	LOW FLAME TIME METER
C2	HIGH FLAME TIME METER
FU1	FAN MOTOR LINE FUSE
FU3	LINE FUSE
IL	BURNER LINE SWITCH
IM	FAN MOTOR LINE SWITCH
KM1	FAN MOTOR CONTACTOR
LAF	BURNER IN HIGH FLAME INDICATOR LIGHT
LB	INDICATOR LIGHT FOR BURNER LOCK-OUT
LBF	BURNER IN LOW FLAME SIGNALLING LAMP
MV	FAN MOTOR
ST	THERMOSTATS O PRESSURE SWITCHES SERIE
TAB	HIGH LOW FLAME THERMOSTAT/PRESSURE SWITCH
TS	SAFETY THERMOSTAT/PRESSURE SWITCH

CONN-MOTORE FAN MOTOR CONNECTOR

CONN-LINEA BURNER POWER SUPPLY CONNNECTOR

CONN-TAB HIGH-LOW FLAME CONNECTOR

($) IF "TAB" USED REMOVE THE BRIDGE BETWEEN TERMINALS T6-T8

⚠	**WARNING: the burner is fitted with a bridge between terminals T6 and T8 on CN2-TAB connector (external side link, male connector); remove this bridge before thermostat connection.**

Power supply without neutral

If the burner power supply is 230V three-phase or 230V phase-phase (without a neutral), as fas as the Siemens LME2... control box, the RC Siemens RC466890660 filter must be inserted between terminal 2 and the earth terminal on the board.

Key

C - Capacitor (22nF/250V)
LME - Siemens control box
R - Resistor (1Mohm)
RC466890660 - RC Siemens filter

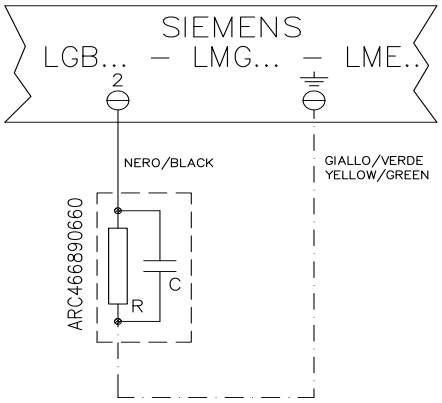

ADJUSTING THE AIR AND GAS FLOW RATES

⚠	**ATTENTION: before starting the burner up, be sure that the manual cutoff valves are open and check that the pressure upstream the gas train complies the value quoted on paragraph "Technical specifications". Be sure that the mains switch is closed.**
	ATTENTION: During commissioning operations, do not let the burner operate with insufficient air flow (danger of formation of carbon monoxide); if this should happen, make the gas decrease slowly until the normal combustion values are achieved.
	WARNING: NEVER LOOSE THE SEALED SCREWS! OTHERWISE, THE DEVICE WARRANTY WILL BE IMMEDIATELY INVALIDATE!

While performing the air and fuel adjustment, check the flow rate, measuring it on the counter or, if it is not possible, checking the combustion head pressure by means of a differential pressure gauge as described on the next paragraph.

Combustion head pressure curves vs. the gas flow rate

Curves are referred to pressure= 0mbar in the combustion head!

The curves referred to the gas pressure in the combustion head, depending on the gas flow rate, are referred to the burner in the combustion stage (percentage of residual O_2 in the flues as shown in the "Recommended combustion values" table and CO in the standard limits). During this stage, the combustion head, the gas butterfly valve and the servocontrol are at the maximum opening. Refer to Fig. 4, showing the correct way to measure the gas pressure, considering the values of pressure in combustion chamber, surveyed by means of the pressure gauge or taken from the boiler's Technical specifications.

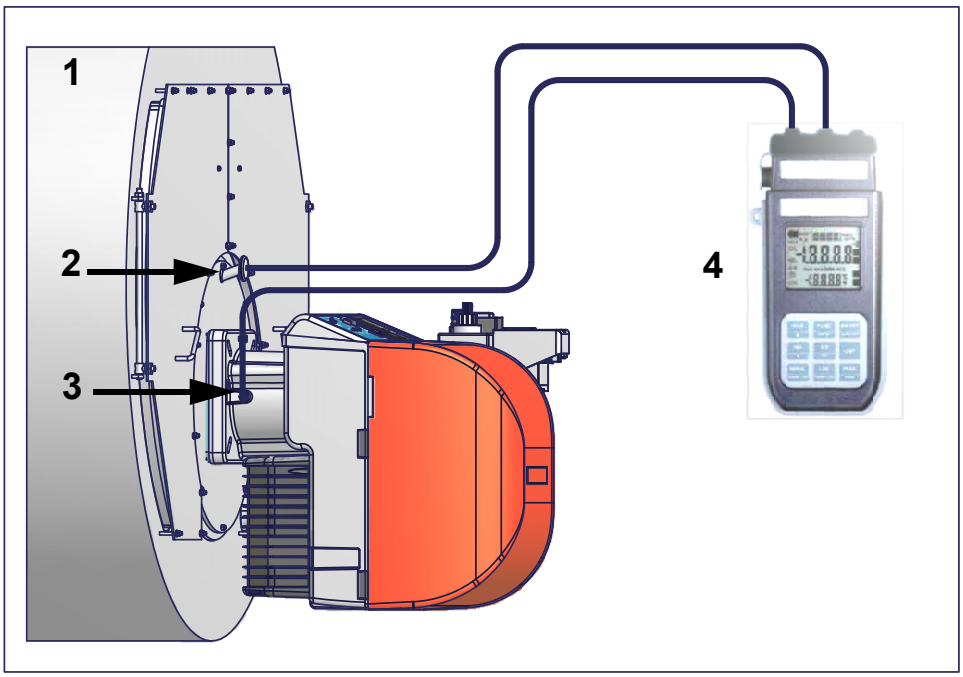

Fig. 4

Key

1 Generator
2 Pressure outlet on the combustion chamber
3 Gas pressure outlet on the butterfly valve
4 Differential pressure gauge

Measuring the gas pressure in the combustion head

In order to measure the pressure in the combustion head, insert the pressure gauge probes: one into the generator's pressure outlet (Fig. 4-2) to get the pressure in the combustion chamber and the other one into the butterfly valve's pressure outlet of the burner (Fig. 4-3). On the basis of the measured differential pressure, it is possible to get the maximum flow rate: in the pressure - rate curves (showed on the next paragraph), it is easy to get the burner output in kW or Stm3/h (quoted on the x axis) from the pressure measured in the combustion head (quoted on the y axis).

NOTE: THE PRESSURE-RATE CURVES ARE APPROXIMATE; FOR A PROPER SETTING OF THE GAS RATE, PLEASE REFER TO THE GAS METER READING.

Plugs for pressure measurement

To measure the pressure in the combustion chamber, as far as the IDEA series, a pressure plug is provided upstream the burner's blast tube.

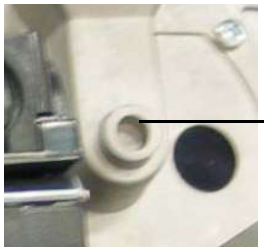

Single-stage models

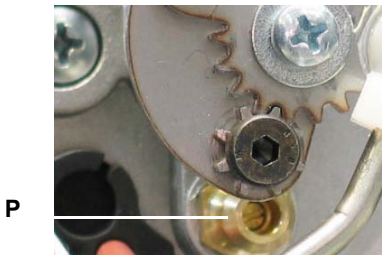

Double-stage models

The values in the diagrams refer to **natural gas** with a calorific value of 8125 kcal/Stm^3 (15°C, 1013 mbar) and a density of 0.714 kg/Stm^3 .

The values in the diagrams refer to **GPL** with a calorific value of 22300 kcal/Stm^3 (15°C, 1013 mbar) and a density of 2.14 kg/Stm^3. When the calorific value and the density change, the pressure values should be adjusted accordingly.

$$\Delta p2 = \Delta p1 \quad * \left(\frac{Q2}{Q1}\right)^2 * \left(\frac{\rho 2}{\rho 1}\right)$$

Where:

$p1$ Natural gas pressure shown in diagram
$p2$ Real gas pressure
$Q1$ Natural gas flow rate shown in diagram
$Q2$ Real gas flow rate
$\rho 1$ Natural gas density shown in diagram
$\rho 2$ Real gas density

Pressure in combustion head - gas rate curves

Natural gas Burners

NG70 M-..

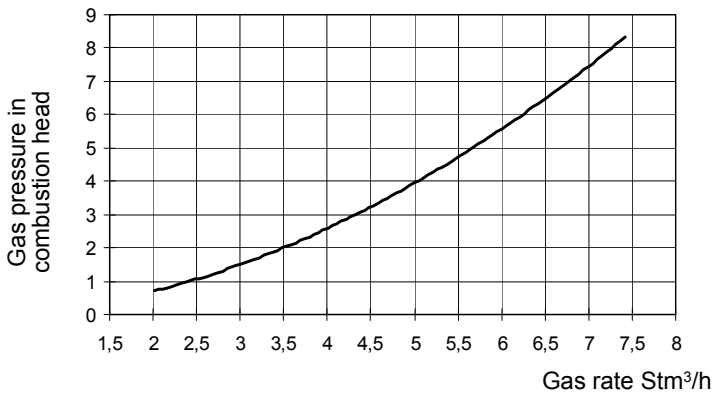

NGX70 M-..

NG90 M-.

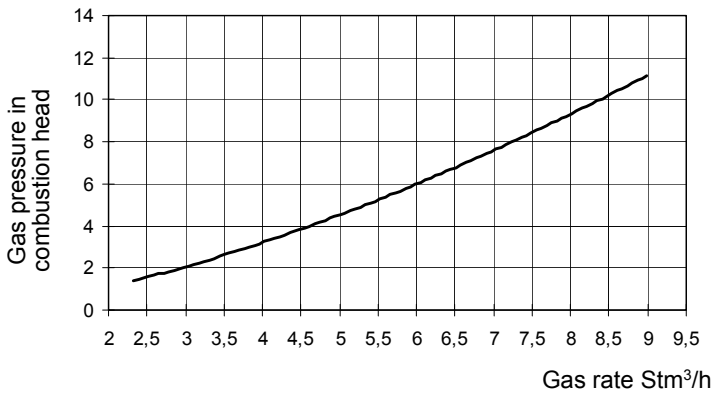

L.P.G. Burners

LG70 L-.

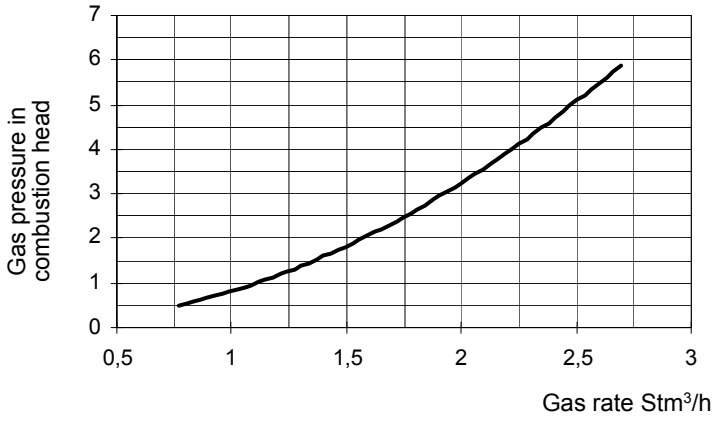

LG90 L-.

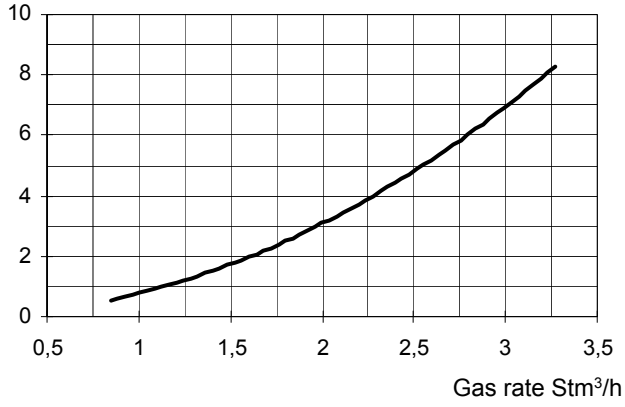

Adjusting the air and gas flow rates

⚠	**ATTENTION: before starting the burner up, be sure that the manual cutoff valves are open and check that the pressure upstream the gas train complies the value quoted on paragraph "Technical specifications". Be sure that the mains switch is closed.**
	ATTENTION: During commissioning operations, do not let the burner operate with insufficient air flow (danger of formation of carbon monoxide); if this should happen, make the gas decrease slowly until the normal combustion values are achieved.
	WARNING: NEVER LOOSE THE SEALED SCREWS! OTHERWISE, THE DEVICE WARRANTY WILL BE IMMEDIATELY INVALIDATE!

To perform the adjustments, unscrew the fixing screws and remove the burner cover.

NOTE: the combustion analysis must be performed with the burner cover fitted!

Startup Output

The start-up heat output shall not exceed 120 kW (single stage burners) or 1/3 of nominal output (double-stage, progressive or fully modulating burners). In order to comply with these requirements, burners are provided with butterfly valve and/or slow-opening safety valve.

On double-stage, progressive or modulating burners, the low flame ouptut must be higher than the minimum ouptut quoted in the performance curve (see "Measuring the gas pressure in the combustion head" on page 17).

⚠	**IMPORTANT! the combustion air excess must be adjusted according to the in the following chart:**

Recommended combustion parameters		
Fuel	Recommended (%) CO_2	Recommended (%) O_2
Natural gas	9 ÷ 10	3 ÷ 4,8
LPG	11 ÷ 12	2,8 ÷ 4,3

Adjusting procedure

- Check the phase and neutral position.
- Check the proper earthening.
- (Double-stage burners) Adjust the air and gas flow rates at the maximum output ("high flame") first, by means of the air damper and the valves group pressure stabiliser respectively.

- Check that the combustion parameters are in the suggested limits.
- Check the flow rate measuring it on the counter or, if it was not possible, verifying the combustion head pressure by means of a differential pressure gauge, as described on par. “Measuring the gas pressure in the combustion head” on page 17.
- (Double-stage burners) Set, now, the low flame output, acting on the low flame actuator microswitch in order to avoid the low flame output increasing too much or that the flues temperature gets too low to cause condensation in the chimney.

Adjusting the combustion head

The burner is adjusted in the factory with the combustion head in the position that refers to the "MAX" output. The maximum output setting refers to the “fully-ahead” position of the combustion head, as far as standard models (Fig. 6), and to “fully-backward” position for low NOx burners (Fig. 7). As for “fully-ahead” position, it means that the head is placed inside the boiler, “fully-backward” position means that the head is towards the operator. To remove the combsution head, please refer to par. “Removing and cleaning the combustion head” on pag. 53. As far as the reduced output operation, progressively move the combusiton head towards the “MIN” position, rotating clockwise the **VRT** screw (Fig. 5).

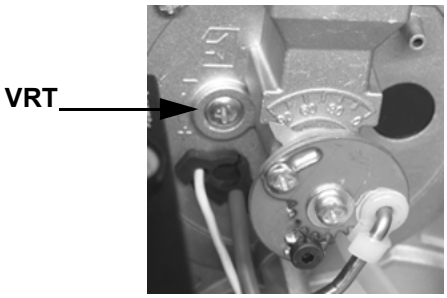

Fig. 5

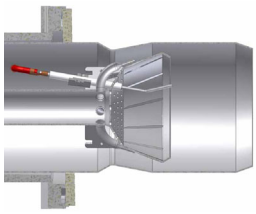

Fig. 6 - Head in “fully-ahead position”

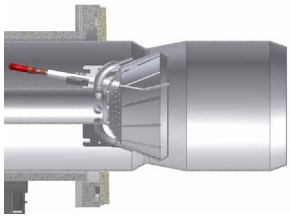

Fig. 7 - Head in “fully-backward position”

go on adjusting air and gas flow rates: check, continuosly, the flue gas analisys, as to avoid combustion with little air; dose the air according to the gas flow rate change following the steps quoted below;

To change the burner setting during the testing in the plant, follows the next procedure.

Adjustements for single-stage burners

1 startup the burner by turning its main switch **A** to on: if the burner locks (LED **B** on in the control panel) press the RESET button (**C**) on the control panel.

ATTENTION: if the ignition pahse fails, during the first start-up, increase the gas flow rate according to the precedure quoted below.

2 acting on the pressure stabiliser of the valves group, adjust the **gas flow rate in the high flame stage** as to meet the values requested from the boiler/utilisation:

⚠ **Pressure controller is provisionally factory-set. The setting values must be locally adapted to machine conditions. Important: Follow the instructions of the burner manufacturer!**

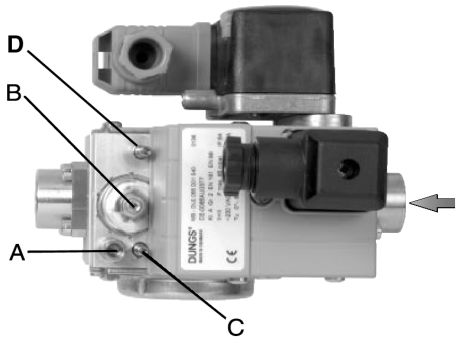

Fig. 8 -**DUNGS MBC 65-DLE**

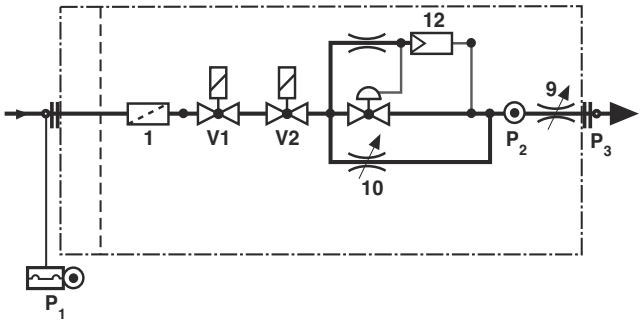

Fig. 9

Keys

A. measuring noozle P2 (Fig. 9) before valve D

B. pressure regulator

C. startup valve (no. 10 in Fig. 9)

D. maximum flow rate valve(no. 9 in Fig. 9)

The compact DUNGS gas Multibloc is made of built-in filter, valves, governor and pressure switch.

- **Setting the startup gas flow rate**

To adjust the gas flow rate at the startup, proceed as follows:

- slacken screw A (Fig. 8) in measuring nozzle. Connect pressure gauge.
- Set to the minimum the pressure regulator by turning adjustment screw B (Fig. 8) anticlockwise .
- Turn the burner on.
- Adjust the flame during the startup phase by means of the bypass C (see Fig. 8 n. 10). Turning clockwise the gas flow decreases, turning counterclockwise the gas flow increases. Do not exceed in the start flow, otherwise the stabiliser B (Fig. 8) will be ineffica-cious.
- Go on adjusting the gas flow rate (unscrewing **C**) until hte flame lights up. Then do not act on **C** anymore and see next paragraph.

NOTE: The adjustment screw **C** for the start flow restrictor is closed (factory setting). The start flow can be set by opening the restrictor up to approx. 80% of the main gas flow rate.

- ***Setting the gas flow rate***

Act on the pressure regulator to achieve the desired gas flow rate, by means of the Adjustment screw B (Fig. 8): turn the screw clockwise to increase the flow rate, turn counter-clockwise to decrease it.

⚠	**On completion of work on the MBC, perform a gas proving test.**

- ***Adjusting the maximum flow rate valve***

The adjustment screw D for the main flow restrictor is completely open (factory setting): do not change its position. Once the adju-smetns are accomplished, close screw A (Fig. 8) in the measuring nozzle..

The air flow rate can be adjusted by means of the **V** screw. The air damper position is shown on the graduated indes **I**, where “0” refe-res to the totally closed postion.

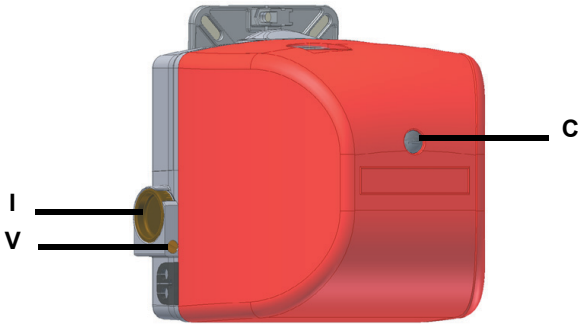

Fig. 10

Double-stage burners

1 Before starting the burner up, set the slow opening. To set the slow opening, remove cover **T**, reverse it upside down and use it as a tool to rotate screw **VR**. Clockwise rotation reduces start flow rate, anticlockwise rotation increases it. Do not use a screwdriver on the screw **VR**!**Note:** the screw **VSB** must be removed only in case of replacemente of the coil.

2 startup the burner by turning its main switch **A** to on: if the burner locks (LED **B** on in the control panel) press the RESET button (**C**) on the control panel..

⚠	**ATTENTION:** in case of start-up failure, increase the gas flow rate according to the procedure quoted below.

3 the burner lights in low flame stage;

4 drive the burner to high flame stage, by means fo the thermostat **TAB**.

5 acting on the pressure stabiliser of the valves group, adjust the **gas flow rate in the high flame stage** as to meet the values requested by the boiler/utilisation: the pressure governor is adjusted by operating the screw **VS** located under the cover **C**. By screwing down the pressure is increased and by unscrewing it is reduced. The valve is adjusted by means of the **RP** regulator after

slackening the locking screw **VB** by a number of turns. By unscrewing the regulator **RP** the valve opens, screwing the valve closes.

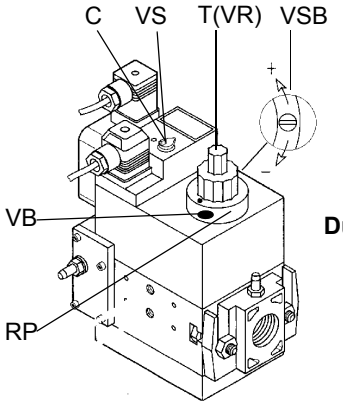

Dungs Multibloc MB-DLE

Fig. 11

6 To adjust the air flow rate, slacken the nut **RA** (see picture) and move the lever **VRA** through the slot as shown in see picture, to increase or decrease the air rate, until the desired rate is obtained; lock then the nut **RA** in this position.

7 Drive the burner to the low flame operation, by the **TAB** boiler thermostat.To eventually change the gas flow rate, slacken the screw **V1** (see picture below) and set the opening angle of the buttefly valve rotating the round plate **C** (turn clockwise to decrease the gas rate or counterclockwise to increase it). The index **S** shows the opening angle of the butterfly valve.

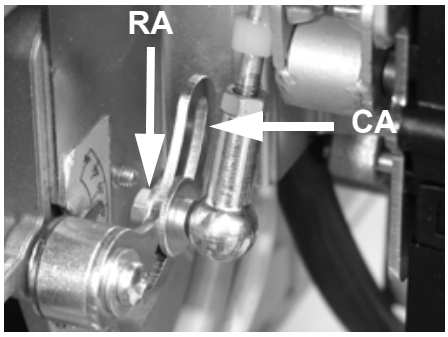

Fig. 12

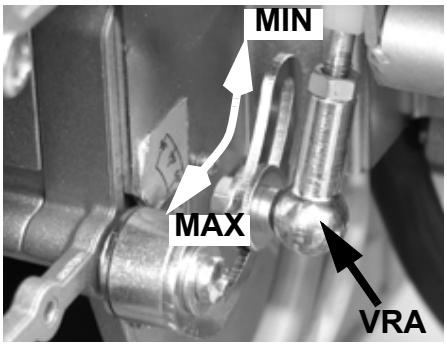

Fig. 13

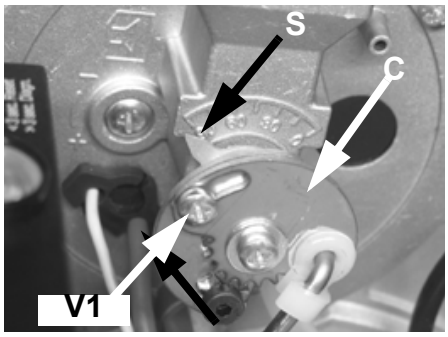

Fig. 14

8 If it was necessary to change the low flame burner output, act on the actuator related cam. Then, check the gas flow rate and repeat from step 7.

As for the setting, refer to this correspondence table. On this actuator, the manual control of the air damper is not provided; the setting of the cams is carried out working with a screwdriver on the **VS** screw placed internally to the cam.

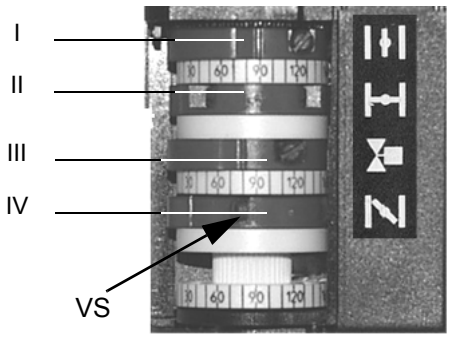

	BERGER STA4.5B0.37/
High flame position (set to 90°)	I
Low flame and ignition position	IV
Stand-by position (set to 0°)	II
Not used	III

Calibration of air and gas pressure switches

The **air pressure switch** locks the control box if the air pressure is not the one requested. If it happens, unlock the burner by means of the control box unlock pushbutton, placed on the burner control panel.

The **gas pressure switches** check the pressure to avoid the burner operate when the pressure value is not in the requested pressure range.

Calibration of air pressure switch (only for single stage burners)

Calibration is carried out as follows:

- Remove the transparent plastic cap.
- Once air and gas setting have been accomplished, startup the burner.
- While the burner is operating, rotate slowly and clockwise the adjusting ring nut **VR**, until the burner locks; read the pressure value on the scale of the pressure switch and set it again to a value reduced by the 15%.
- Repeat the start-up cycle and check the burner runs properly.
- Refit the transparent plastic cover on the pressure switch.

Calibration of air pressure switch (double-stage, progressive and fully-modulating)

To calibrate the air pressure switch, proceed as follows:

- Remove the transparent plastic cap.
- Once air and gas setting have been accomplished, startup the burner.
- During the pre-purge phase o the operation, turn slowly the adjusting ring nut **VR** in the clockwise direction until the burner lockout, then read the value on the pressure switch scale and set it to a value reduced by 15%.
- Repeat the ignition cycle of the burner and check it runs properly.
- Refit the transparent plastic cover on the pressure switch.

Calibration of low gas pressure switch

As for the gas pressure switch calibration, proceed as follows:

- Be sure that the filter is clean.
- Remove the transparent plastic cap.
- While the burner is operating at the maximum output, test the gas pressure on the pressure port of the minimum gas pressure switch.
- Slowly close the manual cutoff valve (placed upstream the pressure switch, see gas train installation diagram), until the detected pressure is reduced by 50%. Pay attention that the CO value in the flue gas does not increase: if the CO values are higher than the limits laid down by law, slowly open the cutoff valve as to get values lower than these limits.
- Check that the burner is operating correctly.
- Clockwise turn the pressure switch adjusting ring nut (as to increase the pressure value) until the burner stops.
- Slowly fully open the manual cutoff valve.
- Refit the transparent plastic cover on the pressure switch.

Adjusting the high gas pressure switch (when provided)

To calibrate the high pressure switch, proceed as follows:

- remove the plastic cover;
- measure the gas pressure in the network, when flame is off;
- by means of the adjusting ring nut **VR**, set the value read on step 2, increased by the 30%;
- replace the plastic cover.

PART II: OPERATION

LIMITATIONS OF USE

THE BURNER IS AN APPLIANCE DESIGNED AND CONSTRUCTED TO OPERATE ONLY AFTER BEING CORRECTLY CONNECTED TO A HEAT GENERATOR (E.G. BOILER, HOT AIR GENERATOR, FURNACE, ETC.), ANY OTHER USE IS TO BE CONSIDERED IMPROPER AND THEREFORE DANGEROUS.

THE USER MUST GUARANTEE THE CORRECT FITTING OF THE APPLIANCE, ENTRUSTING THE INSTALLATION OF IT TO QUALIFIED PERSONNEL AND HAVING THE FIRST COMMISSIONING OF IT CARRIED OUT BY A SERVICE CENTRE AUTHORISED BY THE COMPANY MANUFACTURING THE BURNER.

A FUNDAMENTAL FACTOR IN THIS RESPECT IS THE ELECTRICAL CONNECTION TO THE GENERATOR'S CONTROL AND SAFETY UNITS (CONTROL THERMOSTAT, SAFETY, ETC.) WHICH GUARANTEES CORRECT AND SAFE FUNCTIONING OF THE BURNER.

THEREFORE, ANY OPERATION OF THE APPLIANCE MUST BE PREVENTED WHICH DEPARTS FROM THE INSTALLATION OPERATIONS OR WHICH HAPPENS AFTER TOTAL OR PARTIAL TAMPERING WITH THESE (E.G. DISCONNECTION, EVEN PARTIAL, OF THE ELECTRICAL LEADS, OPENING THE GENERATOR DOOR, DISMANTLING OF PART OF THE BURNER).

NEVER OPEN OR DISMANTLE ANY COMPONENT OF THE MACHINE.

OPERATE ONLY THE MAIN SWITCH, WHICH THROUGH ITS EASY ACCESSIBILITY AND RAPIDITY OF OPERATION ALSO FUNCTIONS AS AN EMERGENCY SWITCH, AND ON THE RESET BUTTON.

IN CASE OF A BURNER SHUT-DOWN, RESET THE CONTROL BOX BY MEANS OF THE RESET PUSHBUTTON. IF A SECOND SHUT-DOWN TAKES PLACE, CALL THE TECHNICAL SERVICE, WITHOUT TRYING TO RESET FURTHER.

WARNING: DURING NORMAL OPERATION THE PARTS OF THE BURNER NEAREST TO THE GENERATOR (COUPLING FLANGE) CAN BECOME VERY HOT, AVOID TOUCHING THEM SO AS NOT TO GET BURNT.

OPERATION

1 Turn on the burner by means of the boiler main switch.
2 Check the control box is not locked and, if necessary, reset it by means of the reset button **R**, on the burner cover.
3 Check the series of thermostats or pressure switches enables the burner to operate.
4 The burner starts and the control box drives the burner fan.
5 At the end of pre-purge phase the ignition transformer is energised, the gas solenoid valves are energised as well and the burner starts up.

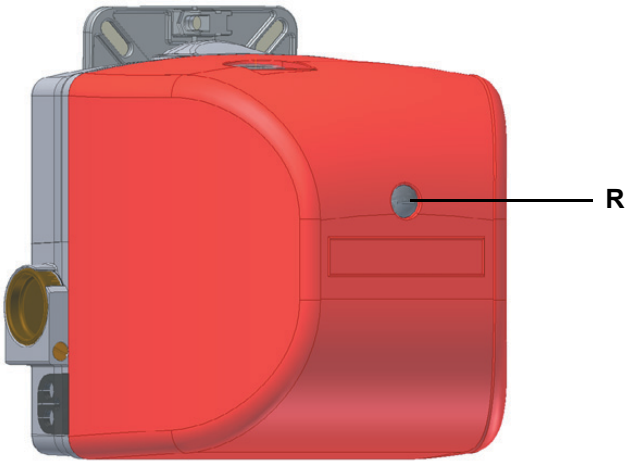

Fig. 15

PART III: MAINTENANCE

At least once a year carry out the maintenance operations listed below. In the case of seasonal servicing, it is recommended to carry out the maintenance at the end of each heating season; in the case of continuous operation the maintenance is carried out every 6 months.

WARNING: ALL OPERATIONS ON THE BURNER MUST BE CARRIED OUT WITH THE MAINS DISCONNECTED AND THE FUEL MANAUL CUTOFF VALVES CLOSED!

ATTENTION: READ CAREFULLY THE "WARNINGS" CHAPTER AT THE BEGINNIG OF THIS MANUAL.

ROUTINE MAINTENANCE

- Check and clean the filter inside the gas valves group (see next paragraph);
- remove, check and clean the combustion head (see page 26);
- check the ignition and detection electrodes; clean and adjust and, if necessary, replace them (see page 27);
- in case of doubt, check the detection circuit once the burner has started up, referring to the diagram on page 27.
- Check and grease of sliding and rotating parts.

NOTE: The check on the ignition and detection electrodes is carried out after removing the combustion head.

Removing the filter in the MULTIBLOC DUNGS MB-DLE 405..412

- Check the filter at least once a year!
- Change the filter if the pressure difference between pressure connection 1 and 3 (Fig. 16-Fig. 17)is $\Delta p > 10$ mbar.
- Change the filter if the pressure difference between pressure connection 1 and 3 (Fig. 16-Fig. 17) is twice as high compared to the last check.

You can change the filter without removing the fitting.

1 Interrupt the gas supply closing the on-off valve.
2 Remove screws 1 ÷ 4 using the Allen key n. 3 and remove filter cover 5 in Fig. 18.
3 Remove the filter 6 and replace with a new one.
4 Replace filter cover 5 and tighten screws 1 ÷ 4 without using any force and fasten.
5 Perform leakage and functional test, $p_{max.}$ = 360 mbar.
6 Pay attention that dirt does not fall inside the valve.

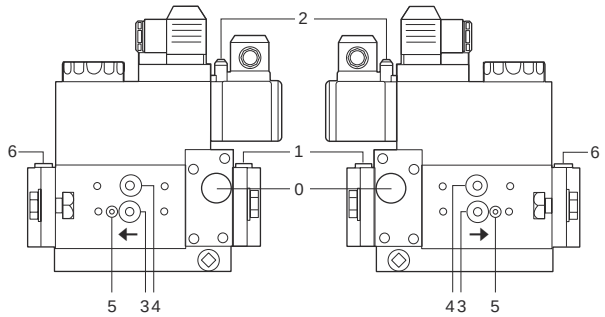

Fig. 16

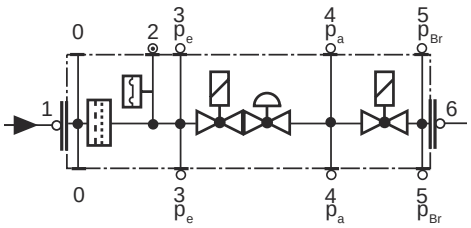

Fig. 17

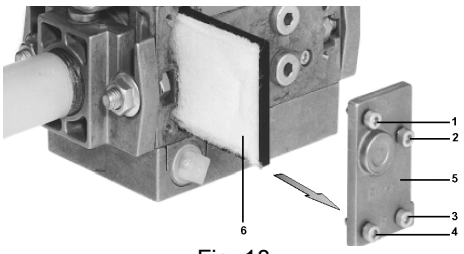

Fig. 18

Disassembling the burner plate for the fan maintenance

To clean/replace the fan, follow the next procedure:

1 remove the burner plate **C** by unscrewing the **V1**, **V2**, **V3** screws and the **F** fixing pin;

2 hang the plate in one of the ways showed on Fig. 20 figure in order to make maintenance operations easier.

⚠ **NOTE: When re-assembling the component plate, make sure that the pin for the air damper "P" enters its housing "B" (see next figure).**

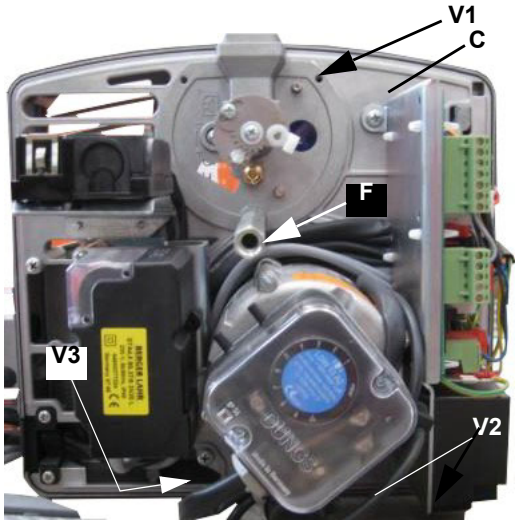

Fig. 19

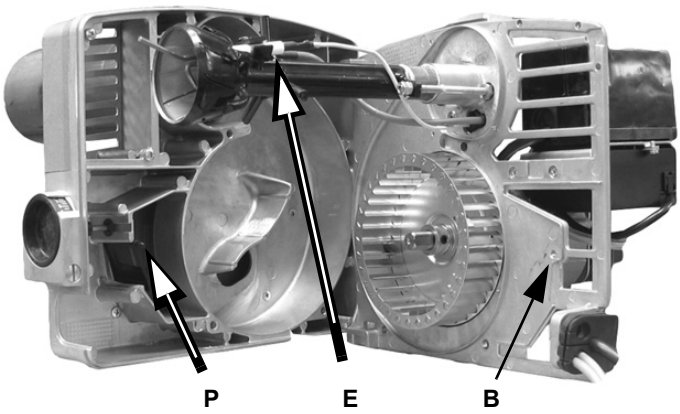

Fig. 20

Removing the combustion head

To remove the combustion head, proceed as follows:

1 remove the burner cover;

2 unscrew the **VT** fixing screws;

3 disconnect the ignition cable **CA**; unscrew the fixing nuts **D** and shift the combustion head off its housing;

4 adjust the electrodes: to replace them, if necessary, disconnect the cables and unscrew **VE**;

5 remove the electrodes and replace them;

6 to clean the combustion head, use a vacuum cleaner; to scrape off the scale use a metallic brush;

7 replace all the items reversing the procedure.

CAUTION: during the assembling phase, before tightening screws V1, V2, V3, mount and tighten screws S1 and S2.

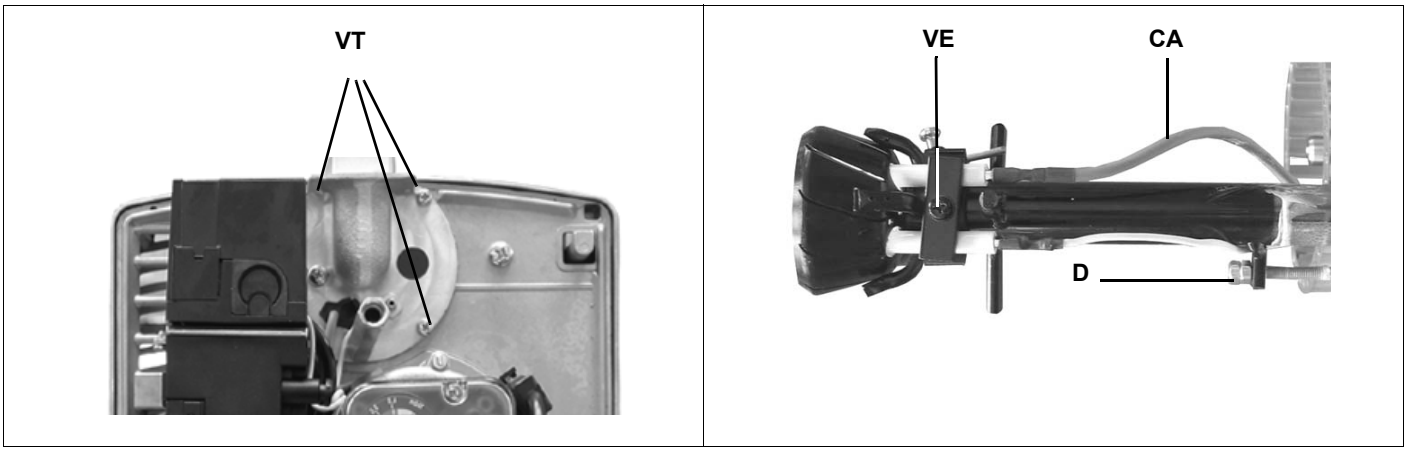

Correct electrodes positioning

To guarantee a proper ignition, the measures shown in the following pictures must be observed.

Ensure the **VE** locking screw of the electrodes group is tight before refitting the burner.

- **Standard burner**

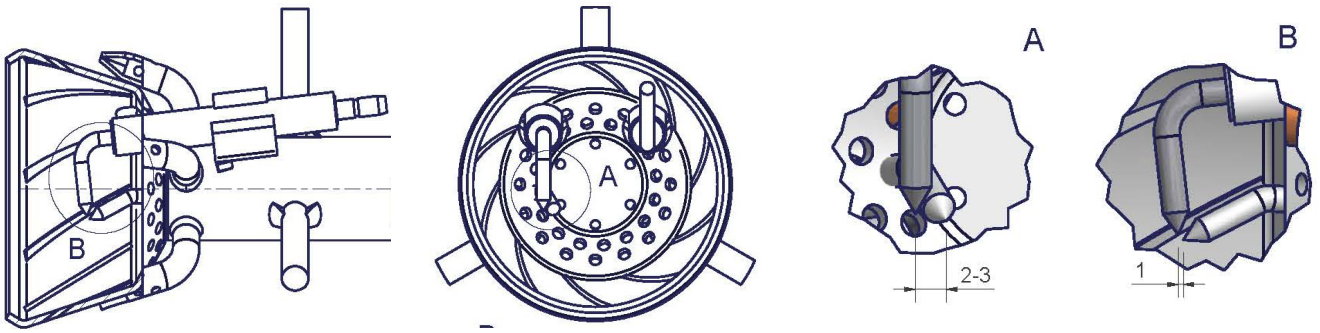

- **Low NOx burners**

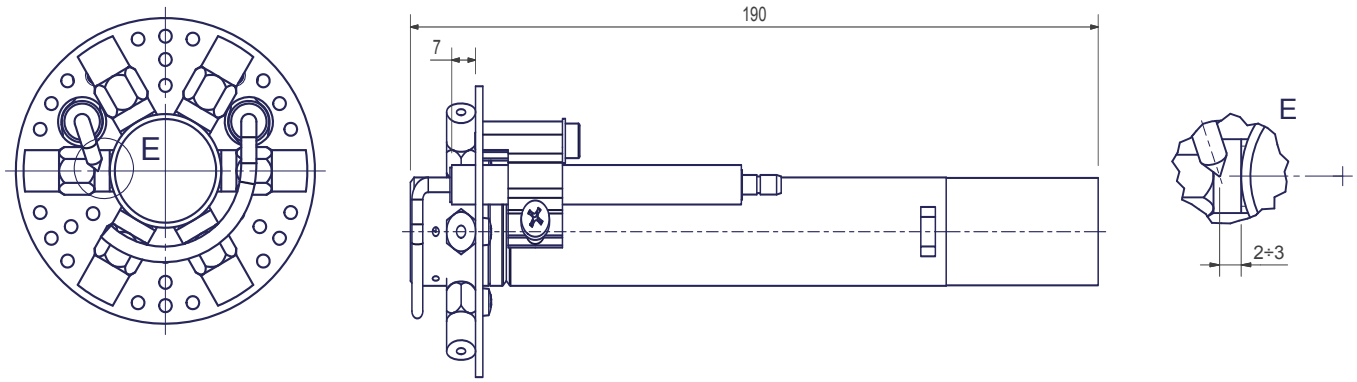

Checking the detection current

If the burner locks, perform the following inpesctions. To measure the detection signals refer to the diagrams in the next picture. If the signal is less than the value shown, check the position of the detection electrode, the electrical contacts and if necessary replace the detection electrode.

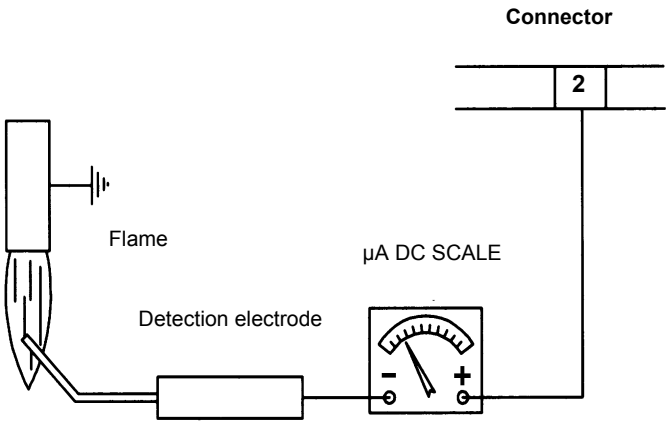

Control box	Minimum detection signal
Siemens LME11	3 µA

Seasonal stop

To stop the burner in the seasonal stop, proceed as follows:

1 turn the burner's main switch to 0 (Off position)

2 disconnect the power mains

3 close the fuel cock of the supply line

Burner disposal

In case of disposal, follow the instructions according to the laws in force in your country about the "Disposal of materials".

TROUBLESHOOTING

CAUSE	TROUBLE											
	THE BURNER DOESN'TSTART	CONTINUE WITH PRE-PURGE	DOESN'T START AND LOCK-OUT	DOESN'T START AND REPEATS THE CYCLE	STARTS AND REPEATS THE CYCLE	STARTS AND LOCK-OUTB	THE FLAME MONITOR DEVICE DOESN'T GIVECONSENT TO START	DOESEN'T SWITCH TO HIGH FLAME	DOESEN'T RETURN IN LOW FLAME	HE SERVO CONTROL IS LOCK AND VIBRATE	LOCK-OUT DURING OPERATION	TURNS OF AND REPEATS CYCLE DURING OPERATION
MAIN SWITCH OPEN	●											
LACK OF GAS	●			●								
MAXIMUM GAS PRESSURE SWITCH DEFECTIVE (IF PROVIDED)	●		●									
THERMOSTATS/PRESSURE SWITCHES DEFECTIVE	●			●								●
OVERLOAD TRIPPED INTERVENTION	●											
AUXILIARIES FUSE INTERRUPTED	●											
CONTROL BOX FAULTY	●	●	●			●					●	
DEFECTIVE SERVOCONTROL (IF PROVIDED)	●	●	●				♦					
AIR PRESSURE SWITCH FAULT OR BAD SETTING	●					●	●				●	
MINIMUM GAS PRESSURE SWITCH DEFECTIVE OR GAS FILTER DIRTY	●			●	●		●					●
IGNITION TRANSFORMER FAULT			●									
IGNITION ELECTRODES BAD POSITION			●									
DETECTION ELECTRODE BAD POSITION						●					●	
BUTTERFLY VALVE BAD SETTING			●			●						
DEFECTIVE GAS GOVERNOR			●	●	●							●
GAS VALVE DEFECTIVE			●									
BAD CONNECTION OR DEFECTIVE HIGH/LOW FLAME THERMOSTAT OR PRESSURE SWITCH (IF PROVIDED)							♦	●	●	♦		
WRONG SETTING SERVO CONTROL CAM							l	l	l			
UV PROBE DIRTY OR DEFECTIVE (IF PROVIDED)			l			l					l	
PHASE-NEUTRAL INVERTED						s						
PHASE-PHASE SUPPLY OR PRESENCE OF VOLTAGE ON THE NEUTRAL CONDUCTOR(*)						s						

l = with any control box;
s = with only LGB2../LMG2../LME11/LME2..
(*) In such cases, insert the circuit SIEMENS “RC466890660” ()See chapter “Electrical connections”)

BURNER EXPLODED VIEW

ITEM	DESCRIPTION		ITEM	DESCRIPTION
1	BLAST TUBE FLANGE		7.15.3	BRACKET
2.1	AIR INTAKE		7.16.1	SPACER
2.2	FAIRLEAD		7.16.2	BUSH
2.3	BURNER HOUSING		7.16.3	BRACKET
2.4	SPACER		7.16.4	ACTUATOR
3	GASKET		7.17.1	TRANSFORMER
4	PLASTIC CAP		7.17.2	BRACKET
5	PLASTIC CAP		7.17.3	JUNCTION BOX
6	BLAST TUBE		8.1	RUBBER FAIRLEAD
7.1	FAIRLEAD		8.2	FLANGE
7.2	AIR DAMPER ASS.Y		8.3	BUTTERFLY VALVE INDEX ASS.Y
7.3	FAN WHEEL		8.4	INSPECTION GLASS
7.4	PRESSURE SWITCH		8.5	BUTTERFLY VALVE
7.5	MOTOR		8.6	COMBUSTION HEAD
7.6	AIR DAMPER INDEX ASS.Y		8.7	SCREW
7.7	PIN		8.8	NUT
7.8	MOTOR PLATE		9.1	ELBOW
7.9	ROD		9.2	NIPPLE
7.10	AIR LOUVER CAM		9.3	PRESSURE SWITCH
7.11	ROD		9.4	GAS VALVE GROUP WITH GOVERNOR
7.12	JOINT		9.5	CONNECTOR
7.13	AIR PRESSURE SWITCH BRACKET		9.6	CONNECTOR
7.14	WASHER		10.1	COVER
7.15.1	CONTROL BOX		10.2	RUBBER PUSHBUTTON
7.15.2	CONTROL BOX SOCKET		10.3	COVER FIXING SCREW

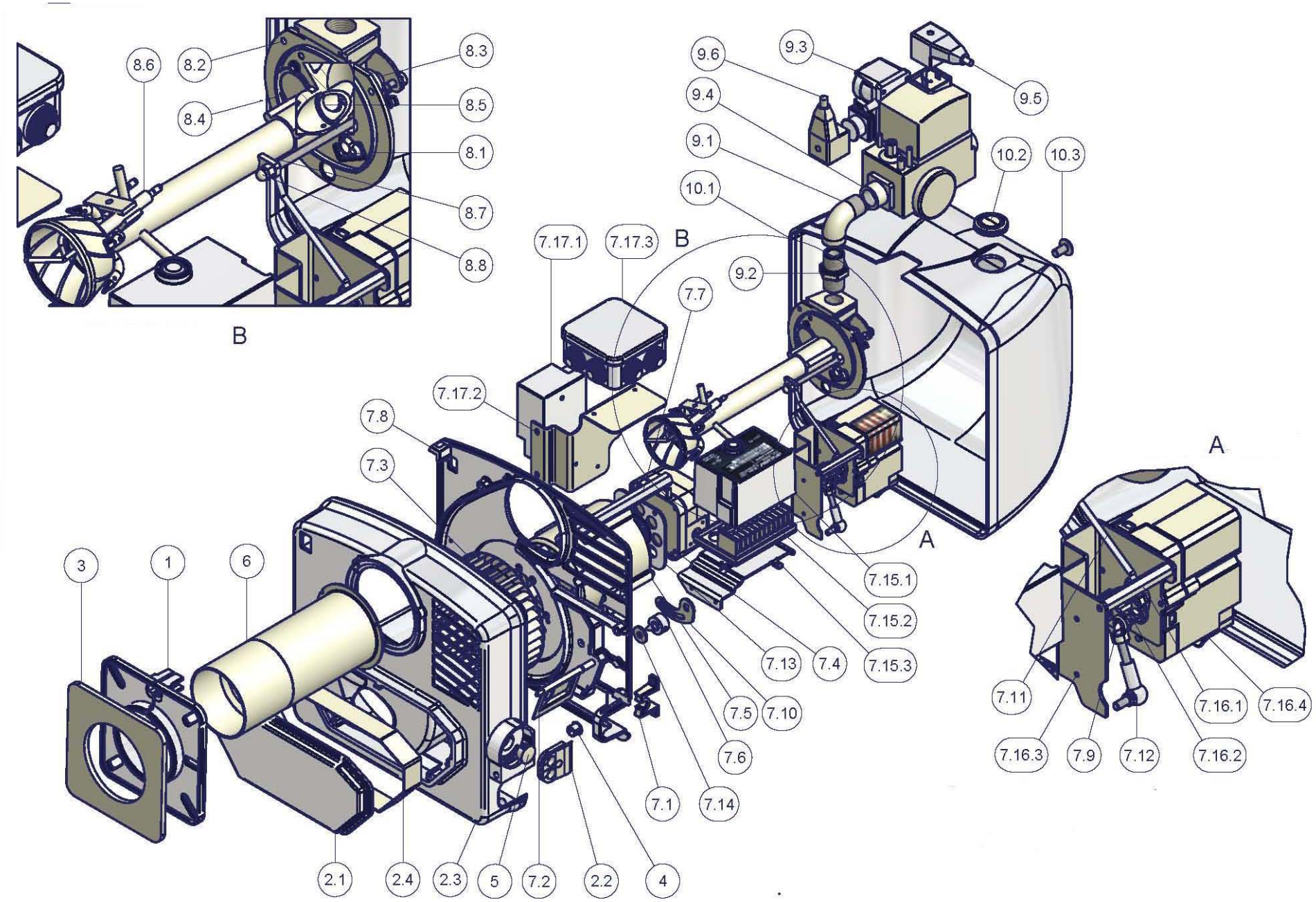
8.6
8.2
8.3
8.4
8.5
8.1
8.7
8.8
B
9.6
9.3
9.5
9.4
9.1
10.2
10.3
10.1
7.17.1
7.17.3
B
9.2
7.7
7.17.2
7.8
7.3
A
A
3
1
6
7.15.1
7.15.2
7.13
7.4
7.15.3
7.5
7.10
7.6
7.1
7.14
2.1
2.4
2.3
5
7.2
2.2
4
7.11
7.16.1
7.16.4
7.16.3
7.9
7.12
7.16.2

WIRING DIAGRAMS

Wiring Diagrams 01-319/5 - Complete key

Single-stage burners

CO	Time counter
ER	Flame detection electrode
EV1	Network side gas solenoid valve (or valves group)
EV2	Burner side gas solenoid valve (or valves group)
F	Fuse
IL	Line switch
L	Phase
LB	Flame lockout signalling lamp
LF	Borner operation lamp
LGB (*) / LMG / LME	SIEMENS control box
MA	Burner power supply terminal board
MV	Fan motor
N	Neutral
PA	Air pressure switch
PG	Minimum gas pressure switch
ST	Thermostats or pressure switches group
TA	Ignition transformer
TS	Safety thermostat/pressure switch on boiler
VM41	BRAHMA control box
VPS	DUNGS gas proving system (optional)

NOTE: Bridge terminals 7 and 9 only if SIEMENS LGB21.33 is used

WARNING:

1 - Power supply 230V 50/60Hz 1N a.c.
2 - Don’t reverse phase with neutral
3 - Be sure the burner is properly hearted

Wiring Diagrams 18-070/3 - Complete key
Double-stage burners

C1	Time counter, low flame
C2	Time counter, high flame
DMG972	SATRONIC monitor box (alternative)
ER	Flame detection electrode
EV1,2	Gas electro-valves (or valves group)
FU3	Fuses
IL	Main switch
LAF1	Burner in high flame indicator light
LAF	Burner in high flame indicator light
LB	Indicator light for burner lock-out
LBF1	Burner in high flame indicator light
LBF	Burner in high flame indicator light
LGB22/LMG22/LME22	SIEMENS control box
MV	Fan motor
PA	Air pressure switch
PG	Minimum gas pressure switch
STA4.5B0.37/63N30L	BERGER actuator
ST	Thermostats or pressure switches serie
TA	Ignition transformer
TAB	High-low flame thermostat or pressure switch (if fitted remove the connection between terminals T6 and T8)
TS	Safety thermostat or pressure switch on boiler
VPS504	DUNGS gas proving system (optional)

ACTUATOR CAMS

BERGER
STA4.5B0.37

I	high flame
II	stand by
IV	low flame
III	Not used

WARNING:

1 - Power supply 230V 50/60Hz 1N a.c.
2 - Don’t reverse phase with neutral
3 - Be sure the burner is properly hearted

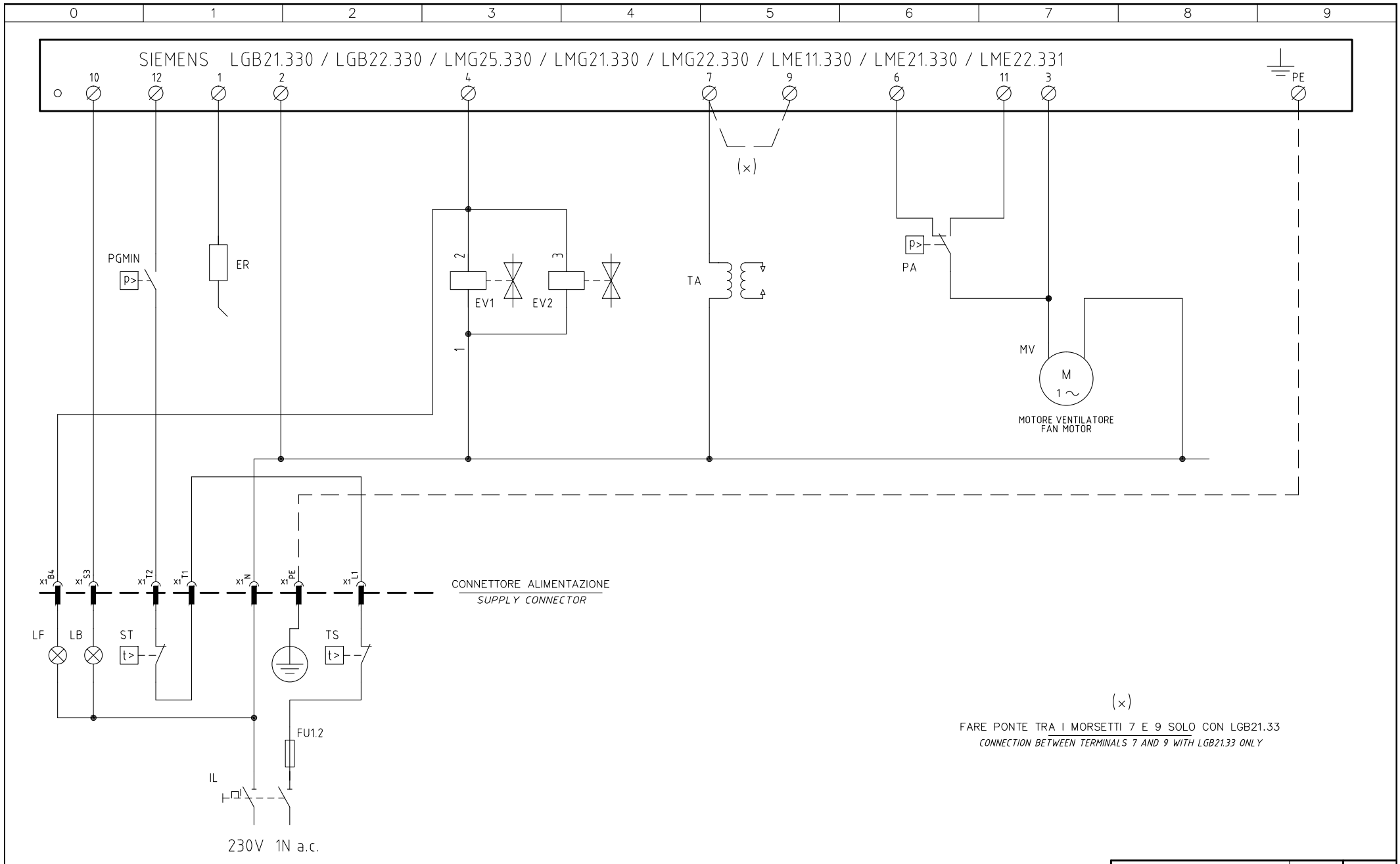

Data 06/02/1996		PREC.	FOGLIO
Revisione 05		/	1
Dis. N. 01 – 319		SEGUE	TOTALE
		2	2

0	1	2	3	4	5	6	7	8	9

Sigla / Item	Descrizione	Description
ER	ELETTRODO RILEVAZIONE FIAMMA	FLAME DETECTION ELECTRODE
EV1	ELETTROVALVOLA GAS LATO RETE (O GRUPPO VALVOLE)	UPSTREAM GAS SOLENOID VALVE (OR VALVES GROUP)
EV2	ELETTROVALVOLA GAS LATO BRUCIATORE (O GRUPPO VALVOLE)	DOWNSTREAM GAS SOLENOID VALVE (OR VALVES GROUP)
FU1.2	FUSIBILE DI LINEA	LINE FUSE
IL	INTERRUTTORE GENERALE	MAINS SWITCH
LB	LAMPADA SEGNALAZIONE BLOCCO BRUCIATORE	INDICATOR LIGHT FOR BURNER LOCK-OUT
LF	LAMPADA SEGNALAZIONE FUNZIONAMENTO BRUCIATORE	INDICATOR LIGHT BURNER OPERATION
LGB.. / LMG.. / LME..	APPARECCHIATURA CONTROLLO FIAMMA	CONTROL BOX
MV	MOTORE VENTILATORE	FAN MOTOR
PA	PRESSOSTATO ARIA	AIR PRESSURE SWITCH
PGMIN	PRESSOSTATO GAS DI MINIMA PRESSIONE	MINIMUM GAS PRESSURE SWITCH
ST	SERIE TERMOSTATI/PRESSOSTATI	SERIES OF THERMOSTATS OR PRESSURE SWITCHES
TA	TRASFORMATORE DI ACCENSIONE	IGNITION TRANSFORMER
TS	TERMOSTATO/PRESSOSTATO DI SICUREZZA	SAFETY THERMOSTAT OR PRESSURE SWITCH

Data 06/02/1996		PREC.	FOGLIO
Revisione 05		1	2
Dis. N. 01 – 319		SEGUE	TOTALE
		/	2

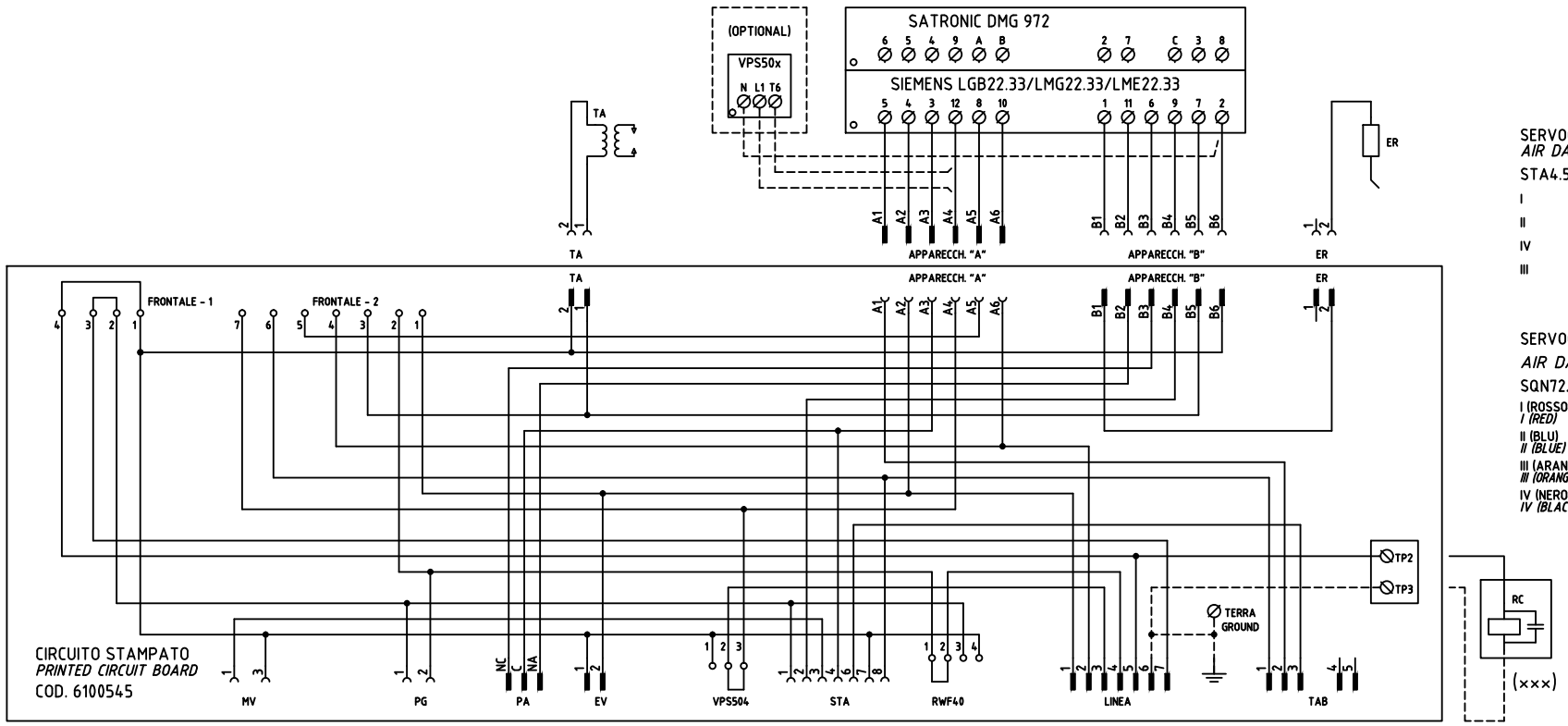

SERVOCOMANDO SERRANDA ARIA
AIR DAMPER ACTUATOR
STA4.5B.. (AB) / STA13B.. (PR)

I	ALTA FIAMMA *HIGH FLAME*
II	SOSTA *STAND-BY*
IV	BASSA FIAMMA *LOW FLAME*
III	NON USATA *NOT USED*

SERVOCOMANDO SERRANDA ARIA
AIR DAMPER ACTUATOR
SQN72.2xx (AB) / SQN72.4xx (PR)

I (ROSSO) *I (RED)*	ALTA FIAMMA *HIGH FLAME*
II (BLU) *II (BLUE)*	SOSTA *STAND-BY*
III (ARANCIO) *III (ORANGE)*	BASSA FIAMMA *LOW FLAME*
IV (NERO) *IV (BLACK)*	NON USATA *NOT USED*

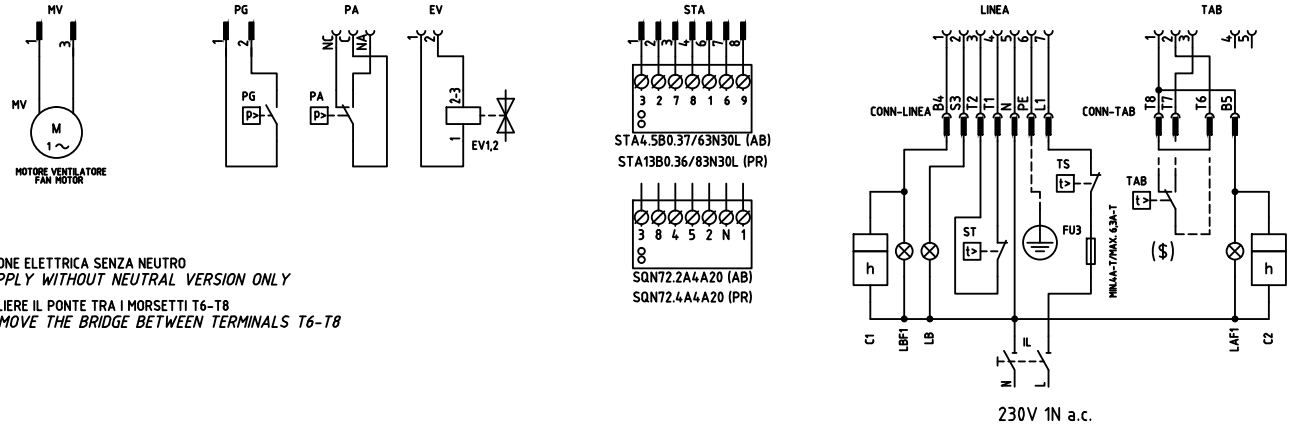

(xxx) SOLO CON ALIMENTAZIONE ELETTRICA SENZA NEUTRO
WITH ELECTRIC SUPPLY WITHOUT NEUTRAL VERSION ONLY

($) SE USATO "TAB", TOGLIERE IL PONTE TRA I MORSETTI T6-T8
IF USED "TAB", REMOVE THE BRIDGE BETWEEN TERMINALS T6-T8

Data 18/10/2005		PREC.	FOGLIO
Revisione 03		/	1
Dis. N. 18 – 070		SEGUE	TOTALE
		2	2

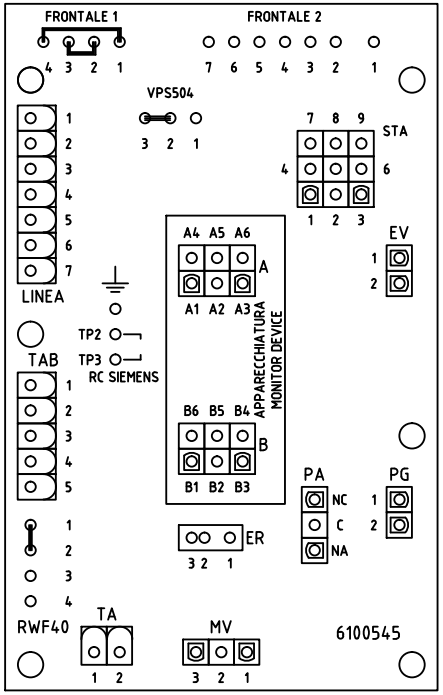

SIGLA/ITEM	FUNZIONE	FUNCTION
C1	CONTAORE BASSA FIAMMA	LOW FLAME TIME COUNTER
C2	CONTAORE ALTA FIAMMA	HIGH FLAME TIME COUNTER
ER	ELETTRODO RILEVAZIONE FIAMMA	FLAME DETECTION ELECTRODE
EV1,2	ELETTROVALVOLE GAS (O GRUPPO VALVOLE)	GAS ELECTRO-VALVES (OR VALVES GROUP)
FU3	FUSIBILE LINEA BRUCIATORE	BURNER LINE FUSE
IL	INTERRUTTORE LINEA BRUCIATORE	BURNER LINE SWITCH
LAF1	LAMPADA SEGNALAZIONE ALTA FIAMMA BRUCIATORE	BURNER IN HIGH FLAME INDICATOR LIGHT
LB	LAMPADA SEGNALAZIONE BLOCCO BRUCIATORE	INDICATOR LIGHT FOR BURNER LOCK-OUT
LBF1	LAMPADA SEGNALAZIONE BASSA FIAMMA BRUCIATORE	BURNER IN LOW FLAME INDICATOR LIGHT
MV	MOTORE VENTILATORE	FAN MOTOR
PA	PRESSOSTATO ARIA COMBURENTE	COMBUSTION AIR PRESSURE SWITCH
PG	PRESSOSTATO GAS DI MINIMA PRESSIONE	MINIMUM GAS PRESSURE SWITCH
RC	CIRCUITO RC	RC CIRCUIT
SATRONIC DMG 972	APPARECCHIATURA CONTROLLO FIAMMA	CONTROL BOX
SIEMENS LGB2233/LMG2233/LME2233	APPARECCHIATURA CONTROLLO FIAMMA	CONTROL BOX
SQN72.2A4A20 (AB)	SERVOCOMANDO SERRANDA ARIA (ALTERNATIVO)	AIR DAMPER ACTUATOR (ALTERNATIVE)
SQN72.4A4A20 (PR)	SERVOCOMANDO SERRANDA ARIA (ALTERNATIVO)	AIR DAMPER ACTUATOR (ALTERNATIVE)
ST	SERIE TERMOSTATI/PRESSOSTATI	SERIES OF THERMOSTATS OR PRESSURE SWITCHES
STA4.5B0.37/63N30L (AB)	SERVOCOMANDO SERRANDA ARIA	AIR DAMPER ACTUATOR
STA13B0.36/83N30L (PR)	SERVOCOMANDO SERRANDA ARIA	AIR DAMPER ACTUATOR
TA	TRASFORMATORE DI ACCENSIONE	IGNITION TRANSFORMER
TAB	TERMOSTATO/PRESSOSTATO ALTA-BASSA FIAMMA	HIGH-LOW THERMOSTAT/PRESSURE SWITCHES
TS	TERMOSTATO/PRESSOSTATO DI SICUREZZA	SAFETY THERMOSTAT OR PRESSURE SWITCH
VPS50x	CONTROLLO DI TENUTA VALVOLE GAS (OPTIONAL)	GAS PROVING SYSTEM (OPTIONAL)

Data 18/10/2005		PREC.	FOGLIO
Revisione 03		1	2
Dis. N. 18 – 070		SEGUE	TOTALE
		/	2

VERSIONE ALTA-BASSA FIAMMA / PROGRESSIVO CON RELE' "KAB" DI SEZIONAMENTO
HIGH-LOW / PROGRESSIVE VERSION WITH "KAB" SECTIONING RELAY
ИСПОЛНЕНИЕ ДВУХСТУПЕНЧАТОЕ/ПРОГРЕССИВНОЕ С РАЗДЕЛИТЕЛЬНЫМ РЕЛЕ «KAB»

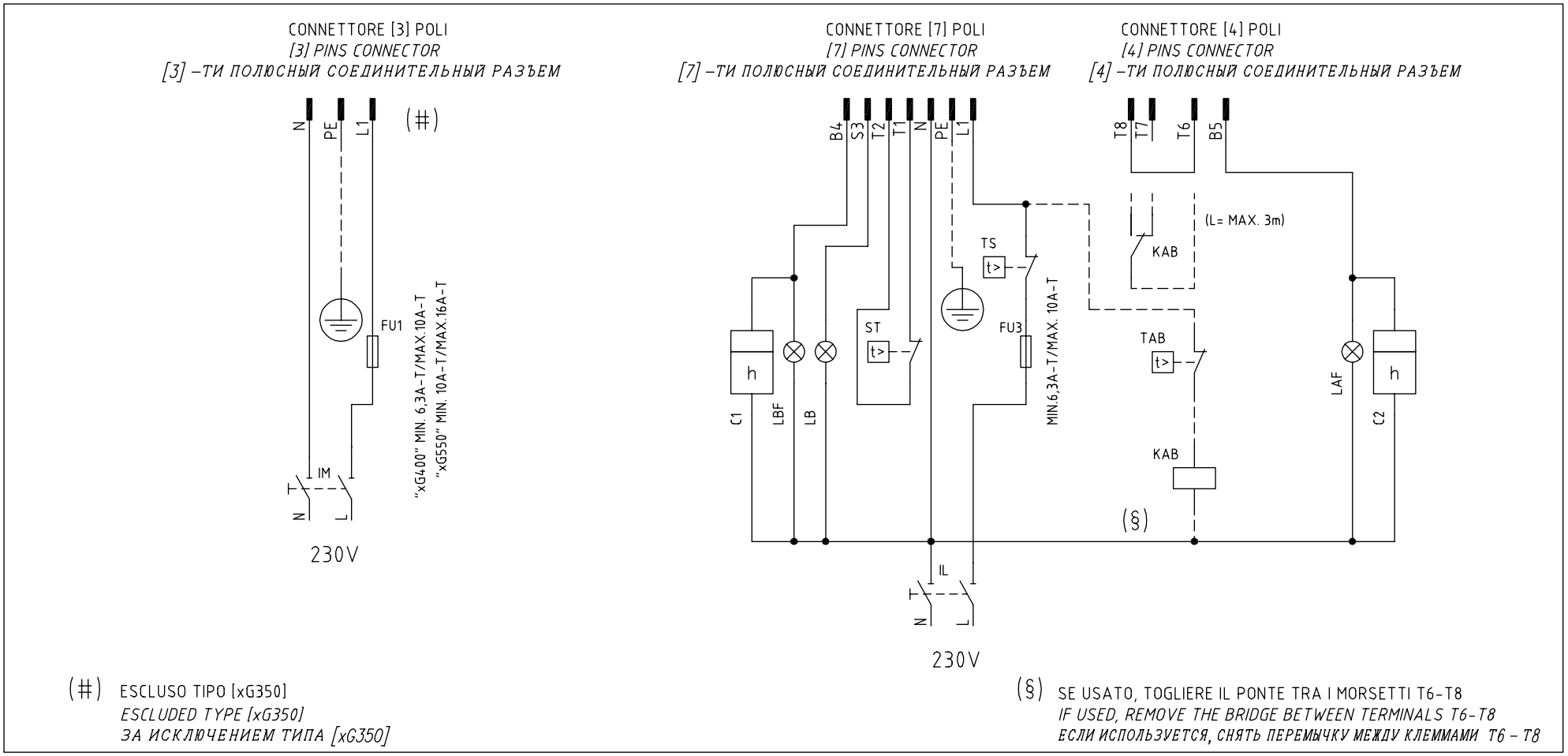

(#) ESCLUSO TIPO [xG350]
ESCLUDED TYPE [xG350]
ЗА ИСКЛЮЧЕНИЕМ ТИПА [xG350]

(§) SE USATO, TOGLIERE IL PONTE TRA I MORSETTI T6-T8
IF USED, REMOVE THE BRIDGE BETWEEN TERMINALS T6-T8
ЕСЛИ ИСПОЛЬЗУЕТСЯ, СНЯТЬ ПЕРЕМЫЧКУ МЕЖДУ КЛЕММАМИ T6 – T8

Data 26/06/2008		PREC. /	FOGLIO 1
Revisione 00			
Dis. N. TAB_1		SEGUE 2	TOTALE 1

0	1	2	3	4	5	6	7	8	9

SIGLA/ITEM	FUNZIONE	FUNCTION
C1	CONTAORE BASSA FIAMMA	LOW FLAME TIME COUNTER
C2	CONTAORE ALTA FIAMMA	HIGH FLAME TIME COUNTER
FU1	FUSIBILE LINEA MOTORE VENTILATORE	FAN MOTOR LINE FUSE
FU3	FUSIBILE LINEA BRUCIATORE	BURNER LINE FUSE
IL	INTERRUTTORE LINEA BRUCIATORE	BURNER LINE SWITCH
IM	INTERRUTTORE LINEA MOTORE VENTILATORE	FAN MOTOR LINE SWITCH
KAB	RELE' AUSILARIO	AUXILIARY RELAY
LAF	LAMPADA SEGNALAZIONE ALTA FIAMMA BRUCIATORE	BURNER IN HIGH FLAME INDICATOR LIGHT
LB	LAMPADA SEGNALAZIONE BLOCCO BRUCIATORE	INDICATOR LIGHT FOR BURNER LOCK-OUT
LBF	LAMPADA SEGNALAZIONE BASSA FIAMMA BRUCIATORE	BURNER IN LOW FLAME INDICATOR LIGHT
ST	SERIE TERMOSTATI/PRESSOSTATI	SERIES OF THERMOSTATS OR PRESSURE SWITCHES
TAB	TERMOSTATO/PRESSOSTATO ALTA-BASSA FIAMMA	HIGH-LOW THERMOSTAT/PRESSURE SWITCHES
TS	TERMOSTATO/PRESSOSTATO DI SICUREZZA	SAFETY THERMOSTAT OR PRESSURE SWITCH

SIGLA/ITEM	FUNZIONE	FUNCTION
C1	CONTAORE BASSA FIAMMA	СЧЕТЧИК ЧАСОВ РАБОТЫ НА МАЛОМ ПЛАМЕНИ
C2	CONTAORE ALTA FIAMMA	СЧЕТЧИК ЧАСОВ РАБОТЫ НА БОЛЬШОМ ПЛАМЕНИ
FU1	FUSIBILE LINEA MOTORE VENTILATORE	ПЛАВКИЙ ПРЕДОХРАНИТЕЛЬ ЛИНИИ ДВИГАТЕЛЯ ВЕНТИЛЯТОРА
FU3	FUSIBILE LINEA BRUCIATORE	ПЛАВКИЙ ПРЕДОХРАНИТЕЛЬ ЛИНИИ ГОРЕЛКИ
IL	INTERRUTTORE LINEA BRUCIATORE	ВЫКЛЮЧАТЕЛЬ ЛИНИИ ГОРЕЛКИ
IM	INTERRUTTORE LINEA MOTORE VENTILATORE	ВЫКЛЮЧАТЕЛЬ ЛИНИИ ДВИГАТЕЛЯ ВЕНТИЛЯТОРА
KAB	RELE' AUSILIARIO	ВСПОМОГАТЕЛЬНОЕ РЕЛЕ
LAF	LAMPADA SEGNALAZIONE ALTA FIAMMA BRUCIATORE	СИГНАЛЬНАЯ ЛАМПОЧКА БОЛЬШОГО ПЛАМЕНИ ГОРЕЛКИ
LB	LAMPADA SEGNALAZIONE BLOCCO BRUCIATORE	СИГНАЛЬНАЯ ЛАМПОЧКА БЛОКИРОВКИ ГОРЕЛКИ
LBF	LAMPADA SEGNALAZIONE BASSA FIAMMA BRUCIATORE	СИГНАЛЬНАЯ ЛАМПОЧКА МАЛОГО ПЛАМЕНИ ГОРЕЛКИ
ST	SERIE TERMOSTATI/PRESSOSTATI	РЯД ТЕРМОСТАТОВ/РЕЛЕ ДАВЛЕНИЯ
TAB	TERMOSTATO/PRESSOSTATO ALTA–BASSA FIAMMA	ТЕРМОСТАТ/РЕЛЕ ДАВЛЕНИЯ БОЛЬШОГО/МАЛОГО ПЛАМЕНИ
TS	TERMOSTATO/PRESSOSTATO DI SICUREZZA	ПРЕДОХРАНИТЕЛЬНЫЙ ТЕРМОСТАТ/ РЕЛЕ ДАВЛЕНИЯ

Data 26/06/2008		PREC. 1	FOGLIO 2
Revisione 00			
Dis. N. TAB_1		SEGUE /	TOTALE 1

APPENDIX

SIEMENS LME11/21/22 CONTROL BOX

The series of equipment LME.. is used for the starup and supervisione of 1- or 2- stage gas burners. The series LME..is interchangeable with the series LGB.. and LMG.., all diagrams and accessories are interchangeable, the main features are:

- Indications of error codes by a signalling multicolor LED in the lockout reset button;
- Programmer fix times for the digital management of signals.

Comparative table

LGB Series	LMG Series	LME Series
---	LMG 25.33	LME 11.33
LGB 21.33	LMG 21.33	LME 21.33
LGB 22.33	LMG 22.33	LME 22.33

Preconditions for burner startup

- Burner control must be reset
- All contacts in the line are closed, request for heat
- No undervoltage
- Air pressure switch LP must be in its “no-load” position
- Fan motor or AGK25 is closed
- Flame detector is darkened and there is no extraneous light

Undervoltage

Safety shutdown from the operating position takes place should mains voltage drop below about AC 175 V (at UN = AC 230 V)

Restart is initiated when mains voltage exceeds about AC 185 V (at UN = AC 230 V).

Controlled intermittent operation

After no more than 24 hours of continuous operation, the burner control will initiate automatic controlled shutdown followed by a restart.

Reversed polarity protection with ionization

If the connections of live conductor (terminal 12) and neutral conductor (terminal 2) aremixed up, the burner control will initiate lockout at the end of the safety time “TSA”.

Control sequence in the event of fault

If lockout occurs, the outputs for the fuel valves, the burner motor and the ignition equipment will immediately be deactivated (< 1 second).

Operational status indication

In normal operation, the different operating states are showed by means of the multicolor LED, inside the lockout reset button:

LED	**red LED** **yellow LED** **green LED**	..... ❍...
		Steady on Off

During startup, status indication takes place according to the table:

Status	Color code	Color
Waiting time tw, other waiting states	❍.....	Off
Ignition phase, ignition controlled	● ❍ ● ❍ ● ❍ ● ❍ ● ❍ ●	Flashing yellow
Operation, flame ok	□.....	Green
Operation, flame not ok	□ ❍ □ ❍ □ ❍ □ ❍ □ ❍	Flashing green
Extraneous light on burner startup	□ ▲ □ ▲ □ ▲ □ ▲ □ ▲	Green - red
Undervoltage	● ▲ ● ▲ ● ▲ ● ▲ ● ▲	Yellow - red
Fault, alarm	▲.....	Red
Error code output (refer to “Error code table”)	▲❍ ▲❍ ▲❍ ▲❍	Flashing red

START-UP PROGRAM

As far as the startup program, see its time diagram:

A Start command (switching on)

This command is triggered by control thermostat / pressure controller «R». Terminal 12 receives voltage and the programming mechanism starts running. On completion of waiting time «tw» with the LME21..., or after air damper «SA» has reached the nominal load position (on completion of «t11») with the LME22..., fan motor «M» will be started.

tw Waiting time

During the waiting time, air pressure monitor «LP» and flame relay «FR» are tested for correct contact positions.

t11 Programmed opening time for actuator «SA»

(Only with LME22...) The air damper opens until the nominal load position is reached. Only then will fan motor «M» be switched on.

t10 Specified time for air pressure signal

On completion of this period of time, the set air pressure must have built up, or else lockout will occur.

t1 Prepurge time

Purging the combustion chamber and the secondary heating surfaces: required with low-fire air volumes when using the LME21... and with nominal load air volumes when using the LME22.... The diagrams show the so-called prepurge time «t1» during which air pressure monitor «LP» must indicate that the required air pressure is available. The effective prepurge time «t1» comprises interval end «tw» through «t3».

t12 Programmed closing time for actuator «SA»

(Only with LME22...)During «t12», the air damper travels to the low-fire position.

t3 Preignition time

During «t3» and up to the end of «TSA», flame relay «FR» is forced to close. On completion of «t3», the release of fuel is triggered at terminal 4.

TSA Ignition safety time

On completion of «TSA», a flame signal must be present at terminal 1. That flame signal must be continuously available until shutdown occurs, or else flame relay «FR» will be deenergized, resulting in lockout.

t4 Interval BV1 and BV2-LR

Time between the end of TSA and the signal to the second fuel valve BV2 or to the load controller LR

B - B' Interval for flame establishment

C Burner operation position

C - D Burner operation (heat production)

D Controlled by "R" shutdown

The burner stops and the control device is ready for a new startup.

LME11 control sequence

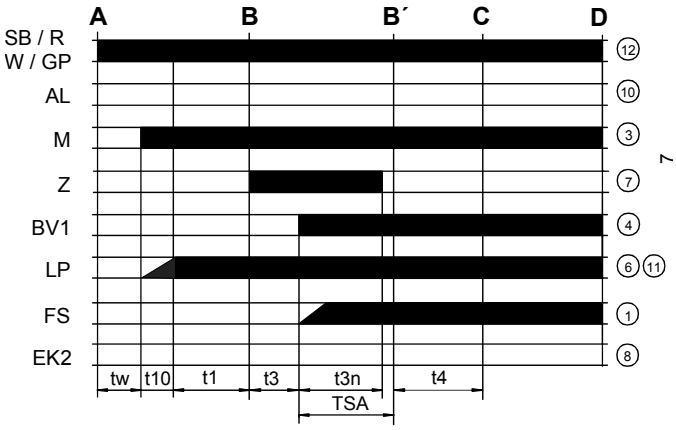

LME22 control sequence

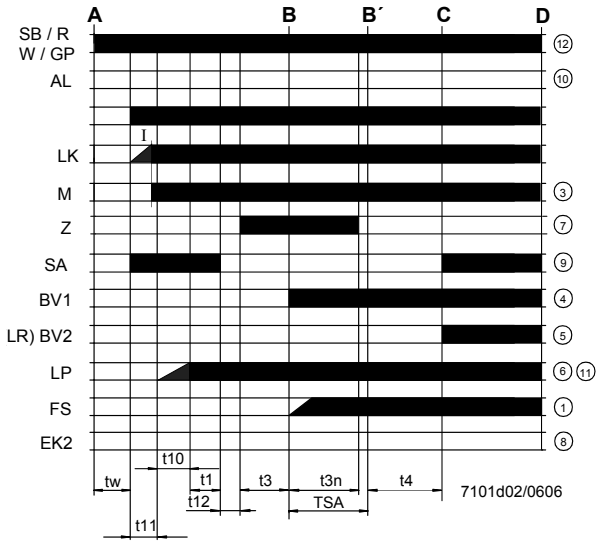

LME21 control sequence

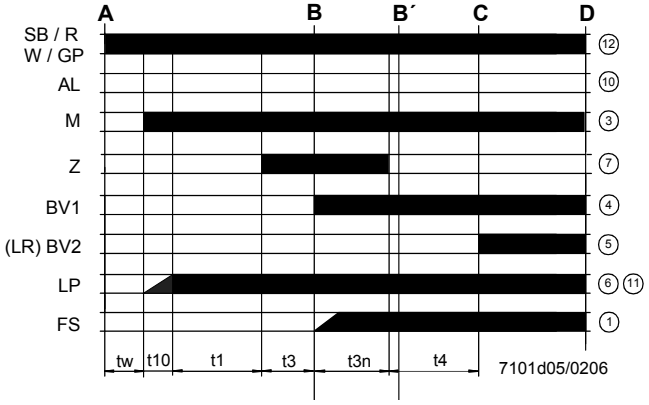

Control sequence

tw	Waiting time
t1	Purge time
TSA	Ignition safety time
t3	Preignition time
t3n	Postignition time
t4	Interval between BV1 and BV2/LR
t10	Specified time for air pressure signal
t11	Programmed opening time for actuator SA
t12	Programmed closing time for actuator SA

LME11 connection diagram

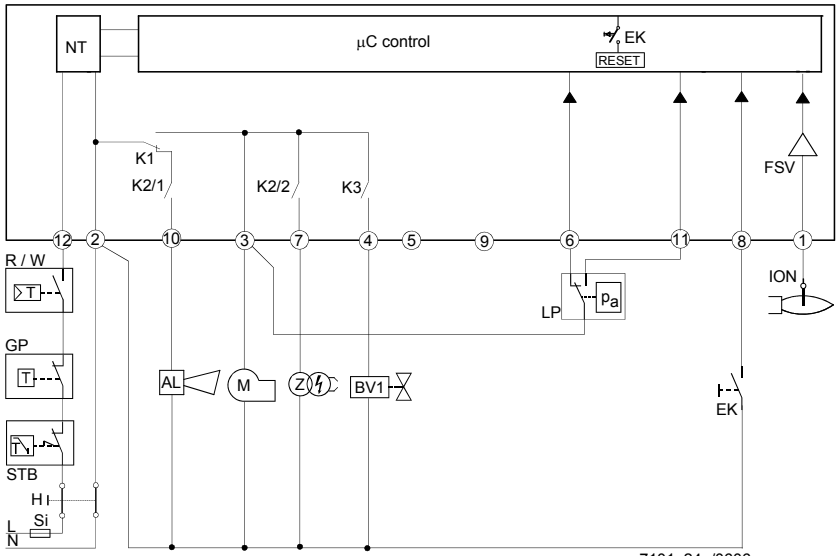

LME21 connection diagram

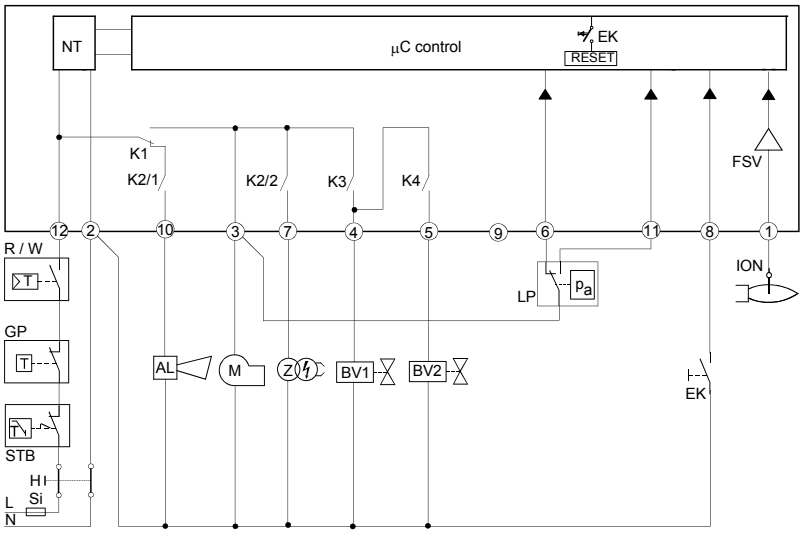

LME22 connection diagram

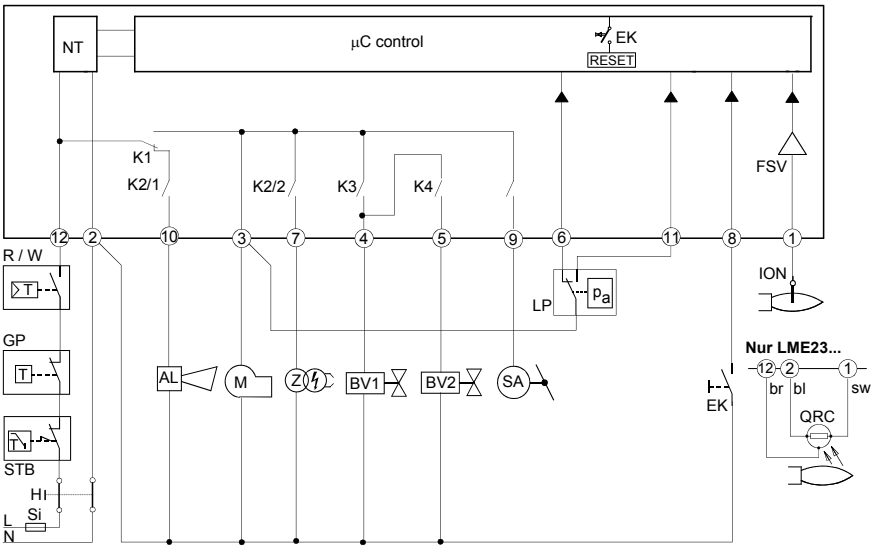

Connection diagram

AL	Error message (alarm)
BV	Fuel valve
EK2	Remote lockout reset button
FS	Flame signal
GP	Gas pressure switch
LP	Air pressure switch
LR	Load controller
M	Fan motor
R	Control thermostat/pressurestat
SB	Safety limit thermostat
W	Limit thermostat /pressure switch
Z	Ignition transformer

CONTROL PROGRAM IN THE EVENT OF FAULT

- If a fault occurs, all outputs will immediately be deactivated (in less than 1s).
- After an interruption of power, a restart will be made with the full program sequence.
- If the operating voltage drops below the undervoltage thresold, a safety shutdown is performed.
- If the operating voltage exceeds the undervoltage thresold, a restart will be performed.
- In case of extraneous light during “t1”, a lockout occurs.
- In case of extraneous light during “tw”, there is a prevention of startup and a lockout after 30 seconds.
- In case of no flame at the end of TSA, there will be max. 3 repetitions of the startup cycle, followed by a lockout at the end of TSA, for mod. LME11..; directly a lockout at the end of TSA for LME21-22 models.
- For LME11 model: if a loss of flame occurs during operation, in case of an establishment of flame at the end of TSA, there will be max. 3 repetitions, otherwise a lockout will occur.
- For LME21-22 models: if a loss of flame occurs during operation, there will be a lockout.
- If the contact of air pressure monitor LP is in working position, a prevention of startup and lockout after 65 seconds will occur.
- IIf the contact of air pressure monitor LP is in normal position, a lockout occurs at the end of t10.
- If no air pressure signal is present after completion of t1, a lockout will occur.

In the event of lockout, the LME.. remains locked and the red signal lamp (LED) will light up.The burner control can immediately be reset. This state is also mantained in the case fo mains failure.

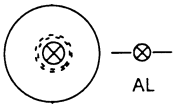

DIAGNOSITICS OF THE CASUE OF FAULT

- Press the lockout reset button for more than 3 seconds to activate the visual diagnostics.
- Count the number of blinks of the red signsl lamp and check the fault condition on the “Error code table” (the device repeats the blinks for regular intervals).

During diagnostics, the control outputs are deactivated:

- the burner remains shut down;
- external fault indication is deactivated;
- fault status is showed by the red LED, inside the LME’s lockout reset buttonaccording to the “Error code table”:

CONTROL BOX LOCKED

ERROR CODE TABLE	
2 blinks **	**No establishment of flame at the end of TSA** - Faulty or soiled fuel valves - Faulty or soiled flame detector - Inadequate adjustement of burner, no fuel - Faulty ignition equipment
3 blinks ***	**The air pressure switch does not switch or remains in idle position:** - LP is faulty - Loss of air pressure signal after t10 - LPis welded in normal position.
4 blinks ****	- Extraneous light when burner starts up.
5 blinks *****	- LP is working position.
6 blinks *****	Free.
7 blinks *******	**Loss of flame during operation** - Faulty or soiled fuel valves - Faulty or soiled flame detector - Inadequate adjustement of burner
8 ÷ 9 blinks	Free
10 blinks **********	**Faulty output contacts** - Wiring error - Anomalous voltage on ouput terminals - Other faults
14 blinks **************	- CPI contact not closed.

RESETTING THE BURNER CONTROL

When lockout occurs, the burner control can immediately be reset, by pressing the lockout reset button for about 1..3 seconds. The LME.. can only be reset when all contacts in the line are closed and when there is no undervoltage.

LIMITATION OF REPETITIONS (only for LME11.. model)

If no flame is established at the end of TSA, or if the flame is lost during operation, a maximum of 3 repetitions per controller startup can be performed via “R”, otherwise lockout will be initiated. Counting of repetitions is restarted each time a controlled startup via “R” takes place.

TECHNICAL CHARACTERISTICS

Mains voltage	120V AC +10% / -15% 230V AC +10% / -15%
Frequency	50 ... 60 Hz +/- 6%
Power consumption	12VA
External primary fuse	max. 10 A (slow)
input current at terminal 12	max. 5 A
Thermostats cable length	max. 3 m
Index of protection	IP40 (to be ensured during mounting)
Operating conditions	-20... +60 °C, < 95% UR
Storage conditions	-20... +60 °C, < 95% UR
Weight	approx. 160 g

C.I.B. UNIGAS S.p.A.
Via L.Galvani, 9 - 35011 Campodarsego (PD) - ITALY
Tel. +39 049 9200944 - Fax +39 049 9200945/9201269
web site: www.cibunigas.it - e-mail: cibunigas@cibunigas.it

Note: specifications and data subject to change. Errors and omissions exceptd.

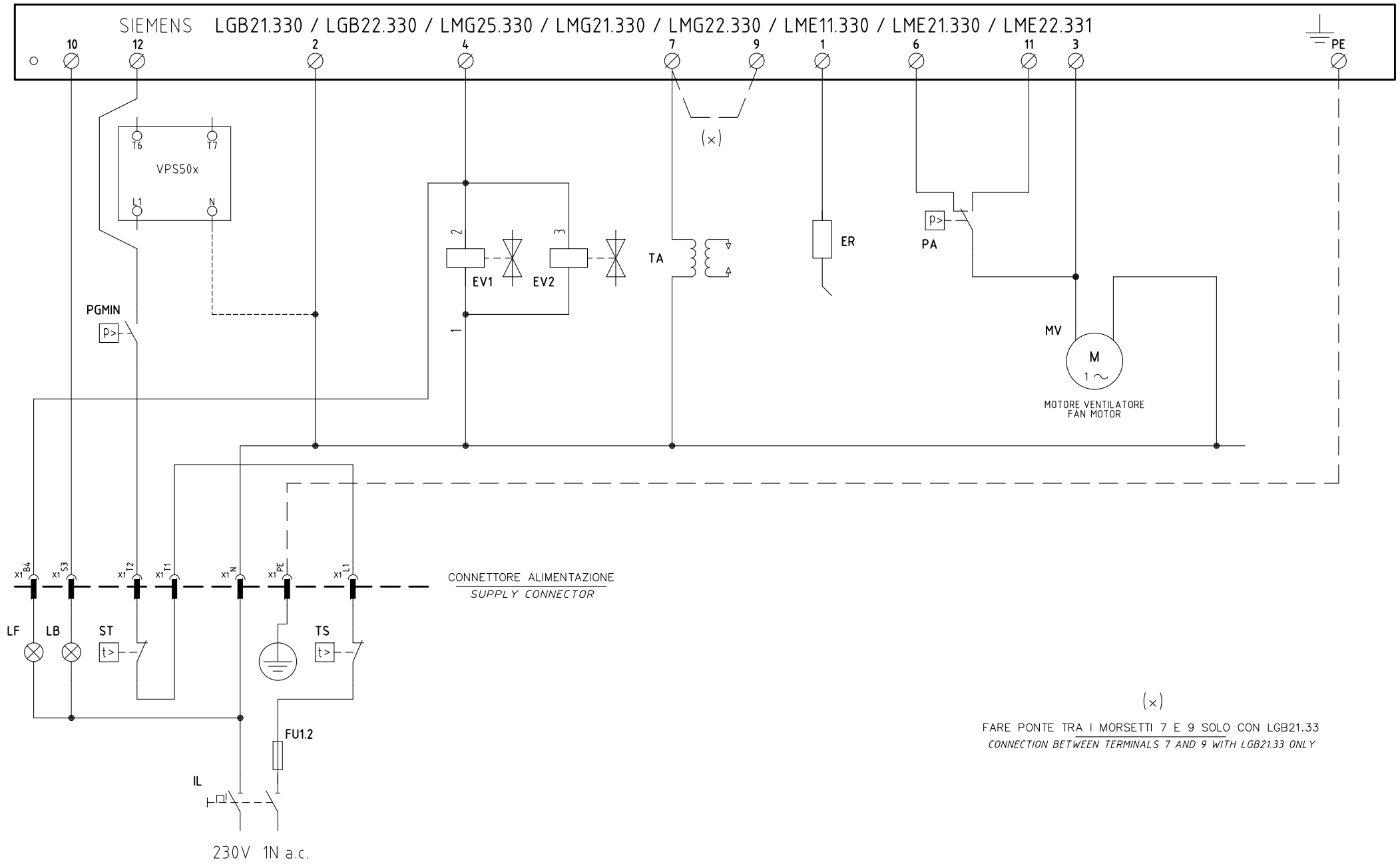

(x)

FARE PONTE TRA I MORSETTI 7 E 9 SOLO CON LGB21.33

CONNECTION BETWEEN TERMINALS 7 AND 9 WITH LGB21.33 ONLY

REV.	MODIFICA	DATA	FIRME
05	SIEMENS LME... & TYPE ADDED	10/07/20	U. PINTON
04	TYPES NG-NGX-LG70/90/140/200 ADDED	01/09/05	U. PINTON
03	SIEMENS LMG... ADDED	07/09/99	U. PINTON
02	"MA" TERMINAL BLOCK MODIFIED	18/03/97	U. PINTON
01	BRIDGE FOR LGB21.33 ADDED	07/11/96	U. PINTON

UNIGAS

Impianto

TIPI/TYPES NG(X)–LG(X) 35/70/90/120/140/200
MODELLO/MODEL x–.TN.x.xx.A.x.xx

Descrizione

Ordine		Data	06/02/1996
Commessa	Data Controllato 10/07/2020	Revisione	05
Esecutore U. PINTON	Controllato M. MASCHIO	Dis. N.	01 – 0319

PREC.	FOGLIO
/	1
SEGUE	TOTALE
2	2

0	1	2	3	4	5	6	7	8	9

SIGLA/ITEM	FOGLIO/SHEET	FUNZIONE/FUNCTION [1]	FUNZIONE/FUNCTION [2]
ER	1	ELETTRODO RILEVAZIONE FIAMMA	FLAME DETECTION ELECTRODE
EV1	1	ELETTROVALVOLA GAS LATO RETE (O GRUPPO VALVOLE)	UPSTREAM GAS SOLENOID VALVE (OR VALVES GROUP)
EV2	1	ELETTROVALVOLA GAS LATO BRUCIATORE (O GRUPPO VALVOLE)	DOWNSTREAM GAS SOLENOID VALVE (OR VALVES GROUP)
FU1.2	1	FUSIBILE DI LINEA	LINE FUSE
IL	1	INTERRUTTORE GENERALE	MAINS SWITCH
LB	1	LAMPADA SEGNALAZIONE BLOCCO BRUCIATORE	INDICATOR LIGHT FOR BURNER LOCK-OUT
LF	1	LAMPADA SEGNALAZIONE FUNZIONAMENTO BRUCIATORE	INDICATOR LIGHT BURNER OPERATION
LGB.. / LMG.. / LME..	1	APPARECCHIATURA CONTROLLO FIAMMA	CONTROL BOX
MV	1	MOTORE VENTILATORE	FAN MOTOR
PA	1	PRESSOSTATO ARIA	AIR PRESSURE SWITCH
PGMIN	1	PRESSOSTATO GAS DI MINIMA PRESSIONE	MINIMUM GAS PRESSURE SWITCH
ST	1	SERIE TERMOSTATI/PRESSOSTATI	SERIES OF THERMOSTATS OR PRESSURE SWITCHES
TA	1	TRASFORMATORE DI ACCENSIONE	IGNITION TRANSFORMER
TS	1	TERMOSTATO/PRESSOSTATO DI SICUREZZA	SAFETY THERMOSTAT OR PRESSURE SWITCH
VPS50x	1	CONTROLLO DI TENUTA VALVOLE GAS (OPTIONAL)	GAS PROVING SYSTEM (OPTIONAL)