# HP91A-HP92A-HP93A
# HP512A-HP515A
# HP520A-HP525A

## *Progressive and fully-modulating gas - light oil burners*

***MANUAL OF INSTALLATION - USE - MAINTENANCE***

**CIB UNIGAS**

**BURNERS - BRUCIATORI - BRULERS - BRENNER - QUEMADORES - ГОРЕЛКИ**

M039140CE Rev. 4 12/2009

## DANGERS, WARNINGS AND NOTES OF CAUTION

**THIS MANUAL IS SUPPLIED AS AN INTEGRAL AND ESSENTIAL PART OF THE PRODUCT AND MUST BE DELIVERED TO THE USER.**

**INFORMATION INCLUDED IN THIS SECTION ARE DEDICATED BOTH TO THE USER AND TO PERSONNEL FOLLOWING PRODUCT INSTALLATION AND MAINTENANCE.**

**THE USER WILL FIND FURTHER INFORMATION ABOUT OPERATING AND USE RESTRICTIONS, IN THE SECOND SECTION OF THIS MANUAL. WE HIGHLY RECOMMEND TO READ IT.**

**CAREFULLY KEEP THIS MANUAL FOR FUTURE REFERENCE.**

### 1) GENERAL INTRODUCTION

- The equipment must be installed in compliance with the regulations in force, following the manufacturer's instructions, by qualified personnel.
- Qualified personnel means those having technical knowledge in the field of components for civil or industrial heating systems, sanitary hot water generation and particularly service centres authorised by the manufacturer.
- Improper installation may cause injury to people and animals, or damage to property, for which the manufacturer cannot be held liable.
- Remove all packaging material and inspect the equipment for integrity.

In case of any doubt, do not use the unit - contact the supplier.

The packaging materials (wooden crate, nails, fastening devices, plastic bags, foamed polystyrene, etc), should not be left within the reach of children, as they may prove harmful.

- Before any cleaning or servicing operation, disconnect the unit from the mains by turning the master switch OFF, and/or through the cut-out devices that are provided.
- Make sure that inlet or exhaust grilles are unobstructed.
- In case of breakdown and/or defective unit operation, disconnect the unit. Make no attempt to repair the unit or take any direct action.

Contact qualified personnel only.

Units shall be repaired exclusively by a servicing centre, duly authorised by the manufacturer, with original spare parts and accessories.

Failure to comply with the above instructions is likely to impair the unit's safety.

To ensure equipment efficiency and proper operation, it is essential that maintenance operations are performed by qualified personnel at regular intervals, following the manufacturer's instructions.

- When a decision is made to discontinue the use of the equipment, those parts likely to constitute sources of danger shall be made harmless.
- In case the equipment is to be sold or transferred to another user, or in case the original user should move and leave the unit behind, make sure that these instructions accompany the equipment at all times so that they can be consulted by the new owner and/or the installer.
- This unit shall be employed exclusively for the use for which it is meant. Any other use shall be considered as improper and, therefore, dangerous.

The manufacturer shall not be held liable, by agreement or otherwise, for damages resulting from improper installation, use and failure to comply with the instructions supplied by the manufacturer.The occurrence of any of the following circustances may cause explosions, polluting unburnt gases (example: carbon monoxide CO), burns, serious harm to people, animals and things:

- Failure to comply with one of the WARNINGS in this chapter
- Incorrect handling, installation, adjustment or maintenance of the burner
- Incorrect use of the burner or incorrect use of its parts or optional supply

### 2) SPECIAL INSTRUCTIONS FOR BURNERS

- The burner should be installed in a suitable room, with ventilation openings complying with the requirements of the regulations in force, and sufficient for good combustion.
- Only burners designed according to the regulations in force should be used.
- This burner should be employed exclusively for the use for which it was designed.
- Before connecting the burner, make sure that the unit rating is the same as delivery mains (electricity, gas oil, or other fuel).
- Observe caution with hot burner components. These are, usually, near to the flame and the fuel pre-heating system, they become hot during the unit operation and will remain hot for some time after the burner has stopped.

When the decision is made to discontinue the use of the burner, the user shall have qualified personnel carry out the following operations:

a Remove the power supply by disconnecting the power cord from the mains.

b Disconnect the fuel supply by means of the hand-operated shut-off valve and remove the control handwheels from their spindles.

**Special warnings**

- Make sure that the burner has, on installation, been firmly secured to the appliance, so that the flame is generated inside the appliance fire-box.
- Before the burner is started and, thereafter, at least once a year, have qualified personnel perform the following operations:

a set the burner fuel flow rate depending on the heat input of the appliance;

b set the flow rate of the combustion-supporting air to obtain a combustion efficiency level at least equal to the lower level required by the regulations in force;

c check the unit operation for proper combustion, to avoid any harmful or polluting unburnt gases in excess of the limits permitted by the regulations in force;

d make sure that control and safety devices are operating properly;

e make sure that exhaust ducts intended to discharge the products of combustion are operating properly;

f on completion of setting and adjustment operations, make sure that all mechanical locking devices of controls have been duly tightened;

g make sure that a copy of the burner use and maintenance instructions is available in the boiler room.

- In case of a burner shut-down, reser the control box by means of the RESET pushbutton. If a second shut-down takes place, call the Technical Service, **without trying to RESET further**.
- The unit shall be operated and serviced by qualified personnel only, in compliance with the regulations in force.

### 3) GENERAL INSTRUCTIONS DEPENDING ON FUEL USED

#### 3a) ELECTRICAL CONNECTION

- For safety reasons the unit must be efficiently earthed and installed as required by current safety regulations.
- It is vital that all saftey requirements are met. In case of any doubt, ask for an accurate inspection of electrics by qualified personnel, since the manufacturer cannot be held liable for damages that may be caused by failure to correctly earth the equipment.
- Qualified personnel must inspect the system to make sure that it is adequate to take the maximum power used by the equipment shown on the equipment rating plate. In particular, make sure that the system cable cross section is adequate for the power absorbed by the unit.
- No adaptors, multiple outlet sockets and/or extension cables are permitted to connect the unit to the electric mains.
- An omnipolar switch shall be provided for connection to mains, as required by the current safety regulations.
- The use of any power-operated component implies observance of a few basic rules, for example:
  - do not touch the unit with wet or damp parts of the body and/or with bare feet;
  - do not pull electric cables;
  - do not leave the equipment exposed to weather (rain, sun, etc.) unless expressly required to do so;
  - do not allow children or inexperienced persons to use equipment;
- The unit input cable shall not be replaced by the user.
  In case of damage to the cable, switch off the unit and contact qualified personnel to replace.
  When the unit is out of use for some time the electric switch supplying all the power-driven components in the system (i.e. pumps, burner, etc.) should be switched off.

## 3b) FIRING WITH GAS, LIGHT OIL OR OTHER FUELS

### GENERAL

- The burner shall be installed by qualified personnel and in compliance with regulations and provisions in force; wrong installation can cause injuries to people and animals, or damage to property, for which the manufacturer cannot be held liable.
- Before installation, it is recommended that all the fuel supply system pipes be carefully cleaned inside, to remove foreign matter that might impair the burner operation.
- Before the burner is commissioned, qualified personnel should inspect the following:

a the fuel supply system, for proper sealing;
b the fuel flow rate, to make sure that it has been set based on the firing rate required of the burner;
c the burner firing system, to make sure that it is supplied for the designed fuel type;
d the fuel supply pressure, to make sure that it is included in the range shown on the rating plate;
e the fuel supply system, to make sure that the system dimensions are adequate to the burner firing rate, and that the system is equipped with all the safety and control devices required by the regulations in force.

- When the burner is to remain idle for some time, the fuel supply tap or taps should be closed.

### SPECIAL INSTRUCTIONS FOR USING GAS

Have qualified personnel inspect the installation to ensure that:

a the gas delivery line and train are in compliance with the regulations and provisions in force;
b all gas connections are tight;
c the boiler room ventilation openings are such that they ensure the air supply flow required by the current regulations, and in any case are sufficient for proper combustion.

- Do not use gas pipes to earth electrical equipment.
- Never leave the burner connected when not in use. Always shut the gas valve off.
- In case of prolonged absence of the user, the main gas delivery valve to the burner should be shut off.

**Precautions if you can smell gas**

a do not operate electric switches, the telephone, or any other item likely to generate sparks;
b immediately open doors and windows to create an air flow to purge the room;
c close the gas valves;
d contact qualified personnel.

- Do not obstruct the ventilation openings of the room where gas appliances are installed, to avoid dangerous conditions such as the development of toxic or explosive mixtures.

### DIRECTIVES AND STANDARDS

***Gas burners***

**European directives**

-Regulation 2016/426/UE (appliances burning gaseous fuels)
-2014/35/UE (Low Tension Directive)
-2014/30/UE (Electromagnetic compatibility Directive)
-2006/42/EC (Machinery Directive)

**Harmonized standards**

-UNI EN 676 (Automatic forced draught burners for gaseous fuels)
-EN 55014-1 (Electromagnetic compatibility- Requirements for house hold appliances, electric tools and similar apparatus)
-EN 60204-1:2006 (Safety of machinery – Electrical equipment of machines.)
-CEI EN 60335-1 (Specification for safety of household and similar electrical appliances);
-CEI EN 60335-2-102 (Household and similar electrical appliances. Safety. Particular requirements for gas, oil and solid-fuel burning appliances having electrical connections).
-UNI EN ISO 12100:2010 (Safety of machinery - General principles for design - Risk assessment and risk reduction);

***Light oil burners***

**European directives**

-2014/35/UE (Low Tension Directive)
-2014/30/UE (Electromagnetic compatibility Directive)
-2006/42/EC (Machinery Directive)

**Harmonized standards**

-UNI EN 267-2011(Automatic forced draught burners for liquid fuels)
-EN 55014-1 (Electromagnetic compatibility- Requirements for house hold appliances, electric tools and similar apparatus)
-EN 60204-1:2006 (Safety of machinery – Electrical equipment of machines.)
-CEI EN 60335-1 (Specification for safety of household and similar electrical appliances);
-CEI EN 60335-2-102 (Household and similar electrical appliances. Safety. Particular requirements for gas, oil and solid-fuel burning appliances having electrical connections).
-UNI EN ISO 12100:2010 (Safety of machinery - General principles for design - Risk assessment and risk reduction);

***Heavy oil burners***

**European Directives**

-2014/35/UE (Low Tension Directive)
-2014/30/UE (Electromagnetic compatibility Directive)
-2006/42/EC (Machinery Directive)

**Harmonized standards**

-UNI EN 267(Automatic forced draught burners for liquid fuels)
-EN 55014-1 (Electromagnetic compatibility- Requirements for house hold appliances, electric tools and similar apparatus)
-EN 60204-1:2006 (Safety of machinery – Electrical equipment of machines.)
-CEI EN 60335-1 (Specification for safety of household and similar electrical appliances);
-CEI EN 60335-2-102 (Household and similar electrical appliances. Safety. Particular requirements for gas, oil and solid-fuel burning appliances having electrical connections).
-UNI EN ISO 12100:2010 (Safety of machinery - General principles for design - Risk assessment and risk reduction);

*Gas - Light oil burners*

**European Directives**

-Regulation 2016/426/UE (appliances burning gaseous fuels)
-2014/35/UE (Low Tension Directive)
-2014/30/UE (Electromagnetic compatibility Directive)
-2006/42/EC (Machinery Directive)

**Harmonized standards**

-UNI EN 676 (Automatic forced draught burners for gaseous fuels)
-UNI EN 267(Automatic forced draught burners for liquid fuels)
-EN 55014-1 (Electromagnetic compatibility- Requirements for house hold appliances, electric tools and similar apparatus)
-EN 60204-1:2006 (Safety of machinery – Electrical equipment of machines.)
-CEI EN 60335-1 (Specification for safety of household and similar electrical appliances);
-CEI EN 60335-2-102 (Household and similar electrical appliances. Safety. Particular requirements for gas, oil and solid-fuel burning appliances having electrical connections).
-UNI EN ISO 12100:2010 (Safety of machinery - General principles for design - Risk assessment and risk reduction);

*Gas - Heavy oil burners*

**European directives:**

-Regulation 2016/426/UE (appliances burning gaseous fuels)
-2014/35/UE (Low Tension Directive)
-2014/30/UE (Electromagnetic compatibility Directive)
-2006/42/EC (Machinery Directive)

**Harmonized standards**

-UNI EN 676 (Automatic forced draught burners for gaseous fuels)
-EN 55014-1 (Electromagnetic compatibility- Requirements for house hold appliances, electric tools and similar apparatus)
-EN 60204-1:2006 (Safety of machinery – Electrical equipment of machines.)
-CEI EN 60335-1 (Specification for safety of household and similar electrical appliances);
-CEI EN 60335-2-102 (Household and similar electrical appliances. Safety. Particular requirements for gas, oil and solid-fuel burning appliances having electrical connections).
-UNI EN ISO 12100:2010 (Safety of machinery - General principles for design - Risk assessment and risk reduction);

*Industrial burners*

**European directives**

-Regulation 2016/426/UE (appliances burning gaseous fuels)
-2014/35/UE (Low Tension Directive)
-2014/30/UE (Electromagnetic compatibility Directive)
-2006/42/EC (Machinery Directive)

**Harmonized standards**

-EN 55014-1 (Electromagnetic compatibility- Requirements for house hold appliances, electric tools and similar apparatus)
-EN 746-2 (Industrial thermoprocessing equipment - Part 2: Safety requirements for combustion and fuel handling systems)
-UNI EN ISO 12100:2010 (Safety of machinery - General principles for design - Risk assessment and risk reduction);
-EN 60204-1:2006 (Safety of machinery – Electrical equipment of machines.)
-EN 60335-2 (Electrical equipment of non-electric appliances for household and similar purposes. Safety requirements)

## Burner data plate

For the following information, please refer to the data plate:

- burner type and burner model: must be reported in any communication with the supplier
- burner ID (serial number): must be reported in any communication with the supplier
- date of production (year and month)
- information about fuel type and network pressure

| | |
|---|---|
| Type | -- |
| Model | -- |
| Year | -- |
| S.Number | -- |
| Output | -- |
| Oil Flow | -- |
| Fuel | -- |
| Category | -- |
| Gas Pressure | -- |
| Viscosity | -- |
| El.Supply | -- |
| El.Consump. | -- |
| Fan Motor | -- |
| Protection | -- |
| Drwaing n° | -- |
| P.I.N. | -- |

**SYMBOLS USED**

***WARNING!*** Failure to observe the warning may result in irreparable damage to the unit or damage to the environment

***DANGER!*** Failure to observe the warning may result in serious injuries or death.

***WARNING!*** Failure to observe the warning may result in electric shock with lethal consequences

Figures, illustrations and images used in this manual may differ in appearance from the actual product.

## BURNER SAFETY

The burners - and the configurations described below - comply with the regulations in force regarding health, safety and the environment. For more in-depth information, refer to the declarations of conformity that are an integral part of this Manual.

***DANGER! Incorrect motor rotation can seriously damage property and injure people.***

### *Residual risks deriving from misuse and prohibitions*

The burner has been built in order to make its operation safe; there are, however, residual risks.

Do not touch any mechanical moving parts with your hands or any other part of your body. Injury hazard
Do not touch any parts containing fuel (i.e. tank and pipes). Scalding hazard
Do not use the burner in situations other than the ones provided for in the data plate.
Do not use fuels other than the ones stated.
Do not use the burner in potentially explosive environments.
Do not remove or by-pass any machine safety devices.
Do not remove any protection devices or open the burner or any other component while the burner is running.
Do not disconnect any part of the burner or its components while the burner is running.
Untrained staff must not modify any linkages.

After any maintenance, it is important to restore the protection devices before restarting the machine.
All safety devices must be kept in perfect working order.
Personnel authorized to maintain the machine must always be provided with suitable protections.

ATTENTION: while running, the parts of the burner near the generator (coupling flange) are subject to overheating. Where necessary, avoid any contact risks by wearing suitable PPE.

# PART I: INSTALLATION

## GENERAL FEATURES

This series represents monobloc gas burners made in die-cast aluminium housing, that can burn either gas or light oil, thanks to the adjustable combustion head which allows a good performance with both fuels. They can be provided in progressive or fully-modulating version.

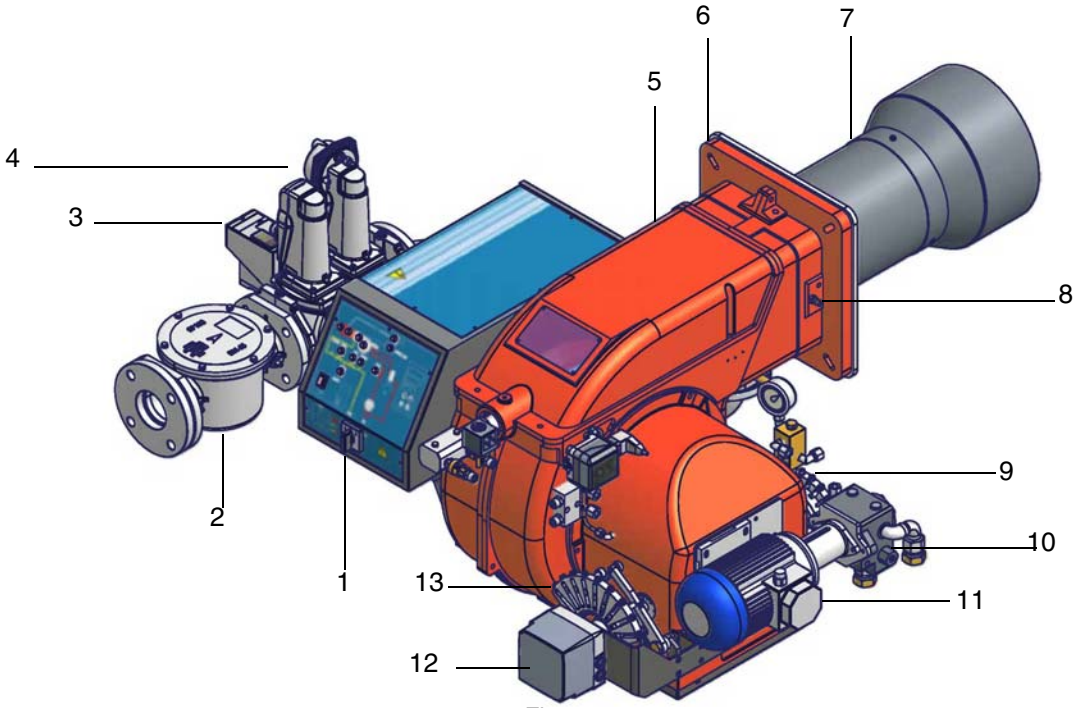


Fig. 1

1 Control panel with startup switch
2 Gas filter
3 Gas proving system
4 Gas valve group
5 Cover
6 Flange
7 Blast tube-Combustion head group
8 Detection probe
9 Oil adjusting cam
10 Light oil pump
11 Pump motor
12 Actuator
13 Gas adjusting cam

**Gas operation:** the gas coming from the supply line, passes through the valves group provided with filter and stabiliser. This one forces the pressure in the utilisation limits. The actuator (12) moves proportionally the air damper and the gas butterfly valve It drives an adjusting cam (13) with variable shape. This one allows the optimisation of the gas flue values, as to get an efficient combustion.

**Light oil operation:**the fuel coming from the supply line, is pushed by the pump (10) to the nozzle and then into the combustion chamber, where the mixture between fuel and air takes place and consequently the flame.

In the burners, the mixture bertween fuel and air, to perform clean and efficient combustion, is activated by atomisation of oil into very small particles. This process is achieved making pressurised oil passing through the nozzle.

The pump (8) main function is to transfer oil from the tank to the nozzle in the desired quantity and pressure. To adjust this pressure, pumps are provided with a pressure regulator (except for some models for which a separate regulating valve is provided). Other pumps are provided with two pressure regulators: one for the high and one for low pressure (in double-stage systems with one nozzle).

The adjustable combustion head can improve the burner performance. The combustion head (7) determines the energetic quality and the geometry of the flame. Fuel and comburent are routed into separated ways as far as the zone of flame generation (combustion chamber).

The control panel (1), placed on the burner front side, shows each operating stage.

### *How to interpret the burner "Performance curve"*

To check if the burner is suitable for the boiler to which it must be installled, the following parameters are needed:

- furnace input, in kW or kcal/h (kW = kcal/h / 860);
- backpressure (data are available on the boiler's ID plate or in the user's manual).

Example:

Furnace input: 600kW

Backpressure: 4mbar

In the "Performance curve" diagram (Fig. 2), draw a vertical line matching the furnace input value and an horizontal line matching the backpressure value. The burner is suitable if the intersection point A is inside the performance curve.

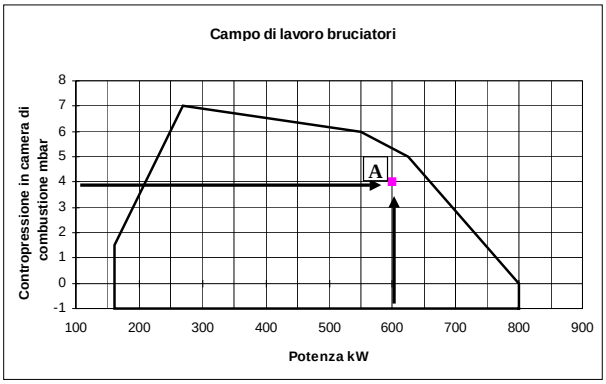


Fig. 2

Data are referred to standard conditions: atmospheric pressure at 1013mbar, ambient temperature at 15°C

***Checking the proper gas train size*** To check the proper gas train size, it is necessary to the available gas pressure value upstream the burner's gas valve. Then subtract the backpressure. The result is called **$p_{gas}$.** Draw a vertical line matching the furnace input value (600kW, in the example), quoted on the x-axis, as far as intercepitng the network pressure curve, according to the installed gas train (DN65, in the example). From the interception point, draw an horizontal line as far as matching, on the y-axis, the value of pressure necessary to get the requested furnace input. This value must be lower or equal to the **$p_{gas}$** value, calculated before.

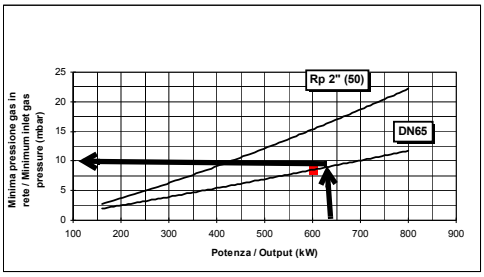


Fig. 3

### *Burner model identification*

Burners are identified by burner type and model. Burner model identification is described as follows.

| Type **HP91A** Model **MG. PR. S. *. A. 1. 80**<br>(1) (2) (3) (4) (5) (6) (7) (8) | |
|---|---|
| (1) BURNER TYPE | **HP91A** |
| (2) FUEL | M - Natural gas G - Light oilLight oil |
| (3) OPERATION (Available versions) | PR - Progressive MD - Fully modulating |
| (4) BLAST TUBE | S - Standard L - Extended |
| (5) DESTINATION COUNTRY | * - see data plate |
| (6) BURNER VERSION | A - Standard |
| (7) EQUIPMENT | 1 = 2 valves + gas proving system<br>8 = 2 valves + gas proving system |
| (8)GAS CONNECTION<br>see Specifications | 50 = Rp2 65 = DN65<br>80 = DN80 100 = DN100 |

## *Specifications*

| BURNER TYPE | | HP91A | HP92A | HP93A | HP512A |
|---|---|---|---|---|---|
| Output | min. - max. kW | 480 - 2670 | 480 - 3050 | 550 - 4100 | 600 - 4500 |
| Fuel | | Natural gas - Light oil | | | |
| Category | | (see next paragraph) | | | |
| Gas rate | min.- max. ($Stm^3/h$) | 51 - 283 | 51 - 323 | 58 - 434 | 63 - 476 |
| Gas pressure | mbar | (see Note 2) | | | |
| Light oil rate | min.-max. kg/h | 40 - 225 | 40 - 257 | 46 - 345 | 50 - 379 |
| Oil viscosity | cSt @ 40°C | 2 - 7.4 | | | |
| Oil density | $kg/m^3$ | 840 | | | |
| Power supply | | 230V 3~ / 400V 3N ~ 50Hz | | | |
| Total power consumption | kW | 5.6 | 7.1 | 9.1 | 10.8 |
| Electric motor | kW | 4 | 5.5 | 7.5 | 9.2 |
| Pump motor | kW | 1.1 | 1.1 | 1.1 | 1.1 |
| Protection | | IP40 | | | |
| Operation | | Progressive - Fully modulating | | | |
| Gas train 50 | Valves size / Gas connection | 50 / Rp 2 | | | |
| Gas train 65 | Valves size / Gas connection | 65 / DN65 | | | |
| Gas train 80 | Valves size / Gas connection | 80 / DN80 | | | |
| Gas train 100 | Valves size / Gas connection | 100 / DN100 | | | |
| Operating temperature | °C | -10 ÷ +50 | | | |
| Storage Temperature | °C | -20 ÷ +60 | | | |
| Working service* | | Intermittent | | | |

| BURNER TYPE | | HP515A | HP520A | HP525A...50 | HP525A...xx |
|---|---|---|---|---|---|
| Output | min. - max. kW | 770 - 5200 | 1000 - 6400 | 2000 - 6700 | 2000 - 8000 |
| Fuel | | Natural gas - Light oil | | | |
| Category | | (see next paragraph) | | | |
| Gas rate | min.- max. ($Stm^3/h$) | 81 - 550 | 106 - 677 | 212 - 709 | 212 - 847 |
| Gas pressure | mbar | (see Note 2) | | | |
| Light oil rate | min.-max. kg/h | 65 - 438 | 84 - 539 | 168 - 564 | 168 - 674 |
| Oil viscosity | cSt @ 40°C | 2 - 7.4 | | | |
| Oil density | $kg/m^3$ | 840 | | | |
| Power supply | | 230V 3~ / 400V 3N ~ 50Hz | | | |
| Total power consumption | kW | 13 | 17 | 22 | 22 |
| Electric motor | kW | 11 | 15 | 18.5 | 18.5 |
| Pump motor | kW | 1.5 | 1.5 | 3 | 3 |
| Protection | | IP40 | | | |
| Operation | | Progressive - Fully modulating | | | |
| Gas train 50 | Valves size /Gas connection Gas | 50 / Rp2 | | | - |
| Gas train 65 | Valves size / Gas connection | 65 / DN65 | | - | DN65 |
| Gas train 80 | Valves size / Gas connection | 80 / DN80 | | - | 80 / DN80 |
| Gas train 100 | Valves size / Gas connection | 100 / DN100 | | - | 100 / DN100 |
| Operating temperature | °C | -10 ÷ +50 | | | |
| Storage Temperature | °C | -20 ÷ +60 | | | |
| Working service* | | Intermittent | | | |

| | |
|---|---|
| **Note1:** | **all gas flow rates are referred to $Stm^3/h$ (1013 mbar absolute pressure, 15 °C temperature) and are valid for G20 natural gas (nett calorific value $H_i$ = 34.02 $MJ/Stm^3$).** |
| **Note2:** | **Maximum gas pressure = 500mbar (with Siemens VGD gas valves).**<br>**Minimum gas pressure = see gas curves.** |

*** NOTE ON THE BURNER WORKING SERVICE:** for safety reasons, one controlled shutdown must be performed every 24 hours of continuous operation.

## *Country and usefulness gas categories*

| GAS CATEGORY | COUNTRY | | | | | | | | | | | | | | | | | | | | | | | | |
|---|---|---|---|---|---|---|---|---|---|---|---|---|---|---|---|---|---|---|---|---|---|---|---|---|---|
| $I_{2H}$ | AT | ES | GR | SE | FI | IE | HU | IS | NO | CZ | DK | GB | IT | PT | CY | EE | LV | SI | MT | SK | BG | LT | RO | TR | CH |
| $I_{2E}$ | LU | PL | - | - | - | - | - | - | - | - | - | - | - | - | - | - | - | - | - | - | - | - | - | - | - |
| $I_{2E(R)B}$ | BE | - | - | - | - | - | - | - | - | - | - | - | - | - | - | - | - | - | - | - | - | - | - | - | - |
| $I_{2L}$ | NL | - | - | - | - | - | - | - | - | - | - | - | - | - | - | - | - | - | - | - | - | - | - | - | - |
| $I_{2ELL}$ | DE | - | - | - | - | - | - | - | - | - | - | - | - | - | - | - | - | - | - | - | - | - | - | - | - |
| $I_{2Er}$ | FR | - | - | - | - | - | - | - | - | - | - | - | - | - | - | - | - | - | - | - | - | - | - | - | - |

## *Overall dimensions (mm)*

*HP91A - HP92A - HP93A*

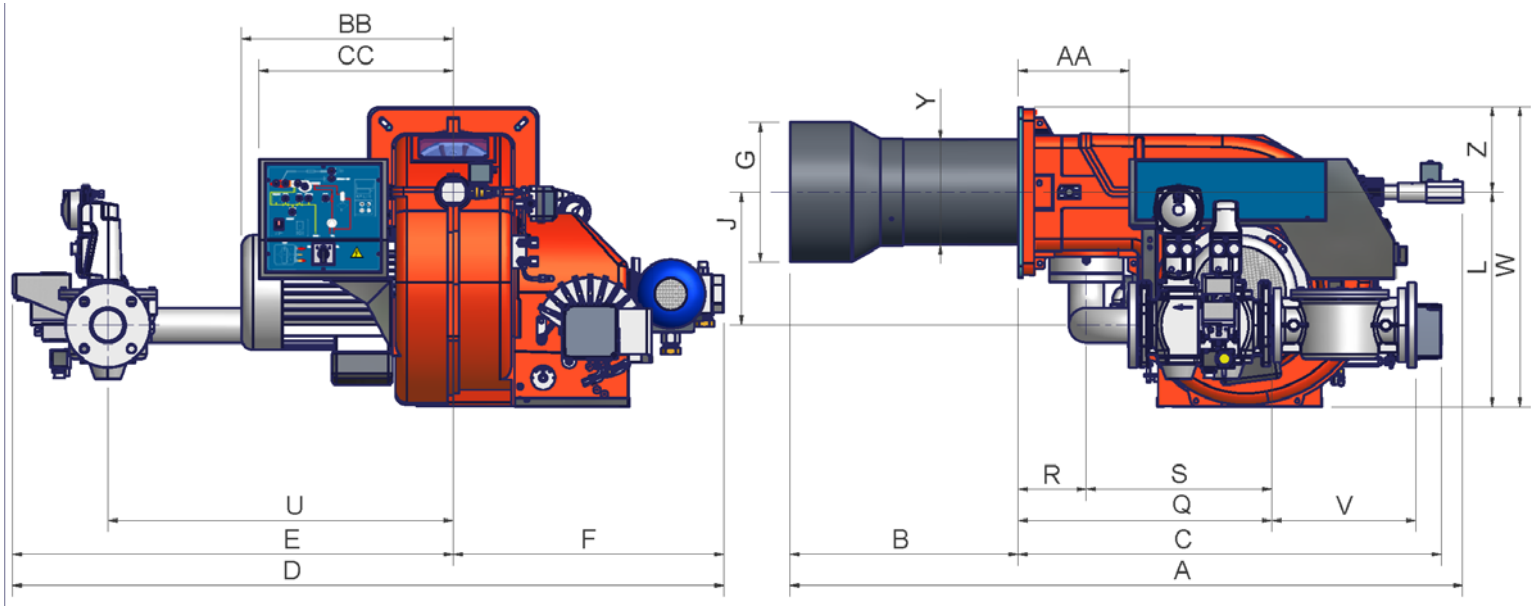


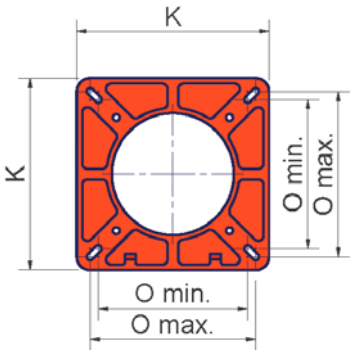


Burner flange

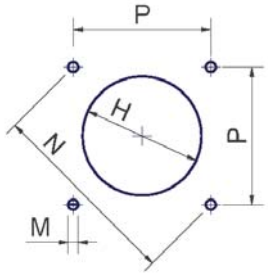


Boiler recommended drilling template

| | DN | A | AA | B | BB | C | CC | D | E | F | G | H | J | K | L | M | N | Omin | Omax | P | Q | R | S | U | V | W | Y | Z |
|---|---|---|---|---|---|---|---|---|---|---|---|---|---|---|---|---|---|---|---|---|---|---|---|---|---|---|---|---|
| **HP91A** | 50 | 1455 | 242 | 490 | 419 | 918 | 422 | 1439 | 852 | 587 | 265 | 295 | 329 | 360 | 466 | M12 | 417 | 280 | 310 | 295 | 522 | 148 | 374 | 624 | 216 | 651 | 228 | 185 |
| **HP91A** | 65 | 1455 | 242 | 490 | 419 | 918 | 422 | 1544 | 957 | 587 | 265 | 295 | 288 | 360 | 466 | M12 | 417 | 280 | 310 | 295 | 551 | 148 | 403 | 750 | 292 | 651 | 228 | 185 |
| **HP91A** | 80 | 1455 | 242 | 490 | 419 | 918 | 422 | 1546 | 959 | 587 | 265 | 295 | 307 | 360 | 466 | M12 | 417 | 280 | 310 | 295 | 592 | 148 | 444 | 750 | 322 | 651 | 228 | 185 |
| **HP91A** | 100 | 1455 | 242 | 490 | 419 | 918 | 422 | 1636 | 1049 | 587 | 265 | 295 | 447 | 360 | 592 | M12 | 417 | 280 | 310 | 295 | 672 | 148 | 524 | 824 | 382 | 777 | 228 | 185 |
| **HP92A** | 50 | 1455 | 242 | 490 | 419 | 918 | 422 | 1439 | 852 | 587 | 269 | 299 | 329 | 360 | 466 | M12 | 417 | 280 | 310 | 295 | 522 | 148 | 374 | 624 | 216 | 651 | 228 | 185 |
| **HP92A** | 65 | 1455 | 242 | 490 | 419 | 918 | 422 | 1544 | 957 | 587 | 269 | 299 | 288 | 360 | 466 | M12 | 417 | 280 | 310 | 295 | 551 | 148 | 403 | 750 | 292 | 651 | 228 | 185 |
| **HP92A** | 80 | 1455 | 242 | 490 | 419 | 918 | 422 | 1546 | 959 | 587 | 269 | 299 | 307 | 360 | 466 | M12 | 417 | 280 | 310 | 295 | 592 | 148 | 444 | 750 | 322 | 651 | 228 | 185 |
| **HP92A** | 100 | 1455 | 242 | 490 | 419 | 918 | 422 | 1636 | 1049 | 587 | 269 | 299 | 447 | 360 | 592 | M12 | 417 | 280 | 310 | 295 | 672 | 148 | 524 | 824 | 382 | 777 | 228 | 185 |
| **HP93A** | 50 | 1460 | 242 | 495 | 460 | 918 | 422 | 1439 | 852 | 587 | 304 | 344 | 329 | 360 | 466 | M12 | 417 | 280 | 310 | 295 | 522 | 148 | 374 | 624 | 216 | 651 | 228 | 185 |
| **HP93A** | 65 | 1460 | 242 | 495 | 460 | 918 | 422 | 1544 | 957 | 587 | 304 | 344 | 288 | 360 | 466 | M12 | 417 | 280 | 310 | 295 | 551 | 148 | 403 | 750 | 292 | 651 | 228 | 185 |
| **HP93A** | 80 | 1460 | 242 | 495 | 460 | 918 | 422 | 1546 | 959 | 587 | 304 | 344 | 307 | 360 | 466 | M12 | 417 | 280 | 310 | 295 | 592 | 148 | 444 | 750 | 322 | 651 | 228 | 185 |
| **HP93A** | 100 | 1460 | 242 | 495 | 460 | 918 | 422 | 1636 | 1049 | 587 | 304 | 344 | 447 | 360 | 592 | M12 | 417 | 280 | 310 | 295 | 672 | 148 | 524 | 824 | 382 | 777 | 228 | 185 |

*HP512A - HP515A - HP520A - HP525A*

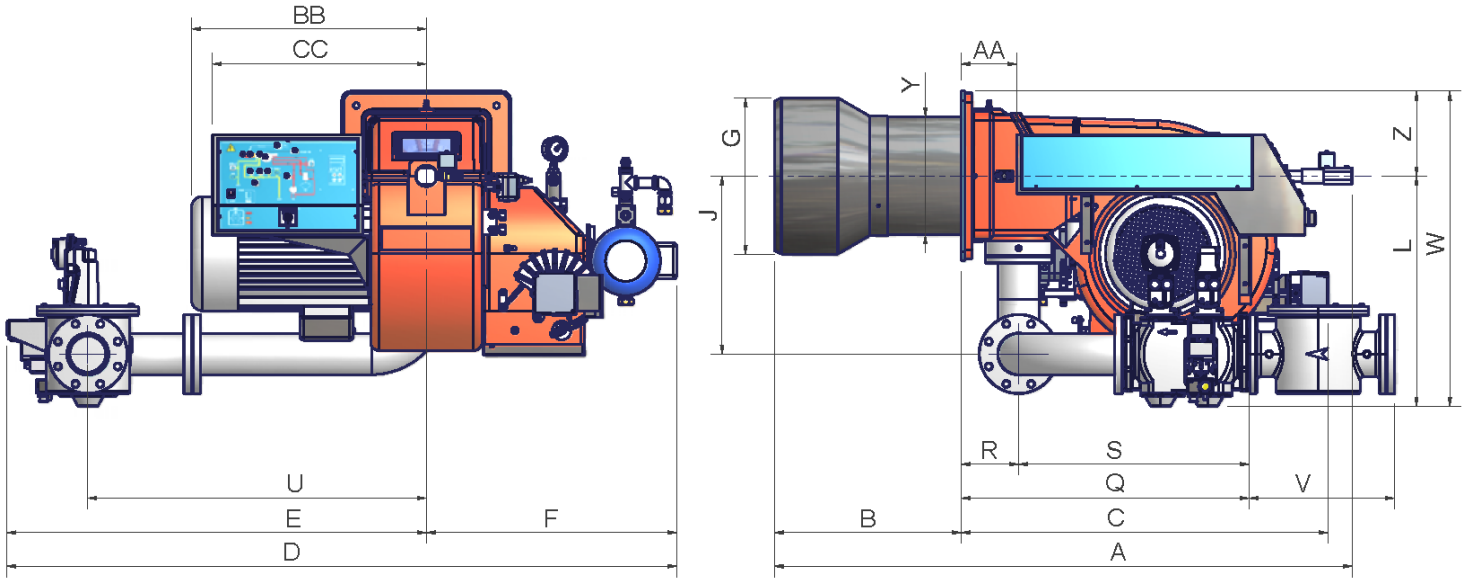


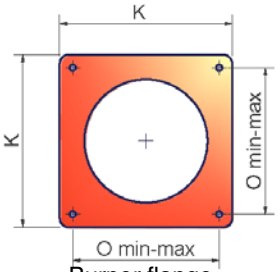


Burner flange

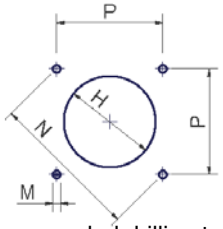


Boiler recommended drilling template

| | DN | A | AA | B | BB | C | CC | D | E | F | G | H | J | K | L | M | N | O | P | Q | R | S | U | V | W | Y | Z |
|---|---|---|---|---|---|---|---|---|---|---|---|---|---|---|---|---|---|---|---|---|---|---|---|---|---|---|---|
| **HP512A** | 50 | 1608 | 332 | 520 | 511 | 1021 | 455 | 1595 | 938 | 657 | 340 | 380 | 337 | 460 | 498 | M14 | 552 | 390 | 390 | 685 | 160 | 525 | 710 | 216 | 733 | 328 | 235 |
| **HP512A** | 65 | 1608 | 332 | 520 | 511 | 1021 | 455 | 1614 | 957 | 657 | 340 | 380 | 337 | 460 | 498 | M14 | 552 | 390 | 390 | 563 | 160 | 403 | 750 | 292 | 733 | 328 | 235 |
| **HP512A** | 80 | 1608 | 332 | 520 | 511 | 1021 | 455 | 1616 | 959 | 657 | 340 | 380 | 354 | 460 | 498 | M14 | 552 | 390 | 390 | 604 | 160 | 444 | 750 | 322 | 733 | 328 | 235 |
| **HP512A** | 100 | 1608 | 332 | 520 | 511 | 1021 | 455 | 1706 | 1049 | 657 | 340 | 380 | 392 | 460 | 498 | M14 | 552 | 390 | 390 | 684 | 160 | 524 | 824 | 382 | 733 | 328 | 235 |
| **HP515A** | 50 | 1608 | 332 | 520 | 511 | 1021 | 455 | 1615 | 938 | 677 | 380 | 420 | 337 | 460 | 498 | M14 | 552 | 390 | 390 | 685 | 160 | 525 | 710 | 216 | 733 | 328 | 235 |
| **HP515A** | 65 | 1608 | 332 | 520 | 511 | 1021 | 455 | 1634 | 957 | 677 | 380 | 420 | 337 | 460 | 498 | M14 | 552 | 390 | 390 | 563 | 160 | 403 | 750 | 292 | 733 | 328 | 235 |
| **HP515A** | 80 | 1608 | 332 | 520 | 511 | 1021 | 455 | 1636 | 959 | 677 | 380 | 420 | 354 | 460 | 498 | M14 | 552 | 390 | 390 | 604 | 160 | 444 | 750 | 322 | 733 | 328 | 235 |
| **HP515A** | 100 | 1608 | 332 | 520 | 511 | 1021 | 455 | 1726 | 1049 | 677 | 380 | 420 | 392 | 460 | 498 | M14 | 552 | 390 | 390 | 684 | 160 | 524 | 824 | 382 | 733 | 328 | 235 |
| **HP520A** | 50 | 1608 | 332 | 520 | 511 | 1021 | 455 | 1615 | 938 | 677 | 400 | 450 | 337 | 460 | 498 | M14 | 552 | 390 | 390 | 685 | 160 | 525 | 710 | 216 | 733 | 340 | 235 |
| **HP520A** | 65 | 1608 | 332 | 520 | 511 | 1021 | 455 | 1634 | 957 | 677 | 400 | 450 | 337 | 460 | 498 | M14 | 552 | 390 | 390 | 563 | 160 | 403 | 750 | 292 | 733 | 340 | 235 |
| **HP520A** | 80 | 1608 | 332 | 520 | 511 | 1021 | 455 | 1636 | 959 | 677 | 400 | 450 | 354 | 460 | 498 | M14 | 552 | 390 | 390 | 604 | 160 | 444 | 750 | 322 | 733 | 340 | 235 |
| **HP520A** | 100 | 1608 | 332 | 520 | 511 | 1021 | 455 | 1726 | 1049 | 677 | 400 | 450 | 392 | 460 | 498 | M14 | 552 | 390 | 390 | 684 | 160 | 524 | 824 | 382 | 733 | 340 | 235 |
| **HP525A** | 50 | 1608 | 115 | 520 | 653 | 1021 | 595 | 1768 | 1071 | 697 | 434 | 484* | 494 | 460 | 595 | M14 | 552 | 390 | 390 | 765 | 160 | 605 | 843 | 216 | 830 | 340 | 235 |
| **HP525A** | 65 | 1608 | 115 | 520 | 653 | 1021 | 595 | 1746 | 1049 | 697 | 434 | 484* | 494 | 460 | 610 | M14 | 552 | 390 | 390 | 643 | 160 | 483 | 843 | 292 | 845 | 340 | 235 |
| **HP525A** | 80 | 1608 | 115 | 520 | 653 | 1021 | 595 | 1781 | 1084 | 697 | 434 | 484* | 494 | 460 | 626 | M14 | 552 | 390 | 390 | 695 | 160 | 535 | 875 | 322 | 861 | 340 | 235 |
| **HP525A** | 100 | 1608 | 115 | 520 | 653 | 1021 | 595 | 1864 | 1167 | 697 | 434 | 484* | 494 | 460 | 639 | M14 | 552 | 390 | 390 | 802 | 160 | 642 | 942 | 382 | 874 | 340 | 235 |

*DN = gas valves diameter

** Fit a counterflange between burner and boiler. As an alternative, make a smaller hole H, but greather than Y and fit the blast tube from the internal side of boiler.

NOTE: the overall dimensions are referred to burners provided with Siemens VGD valves.

***Performance Curves***

**HP91A**

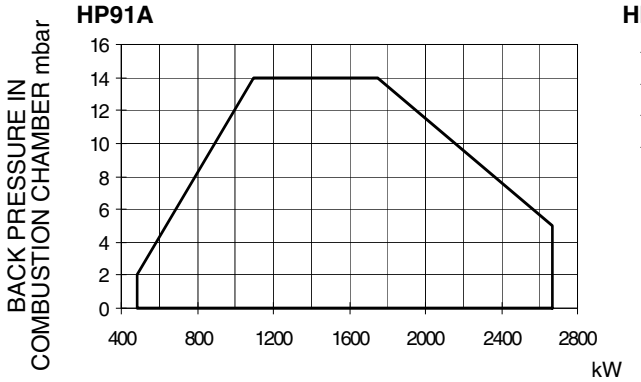


**HP92A**

**HP93A**

**HP512A**

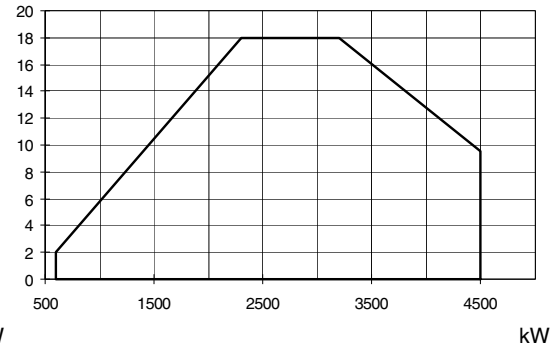


**HP515A**

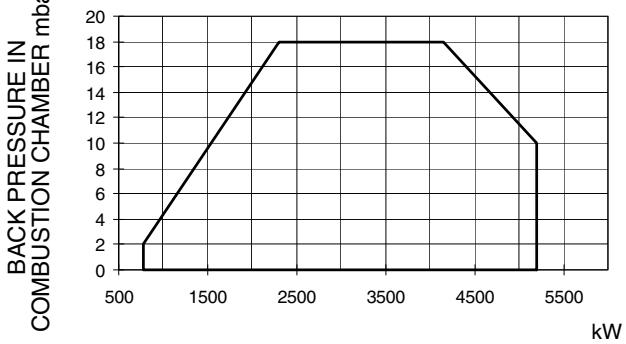


**HP520A**

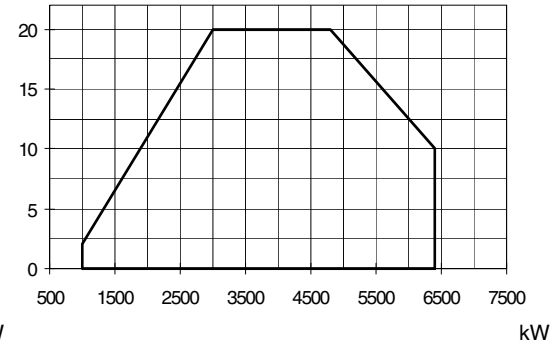


**HP525A Rp2**

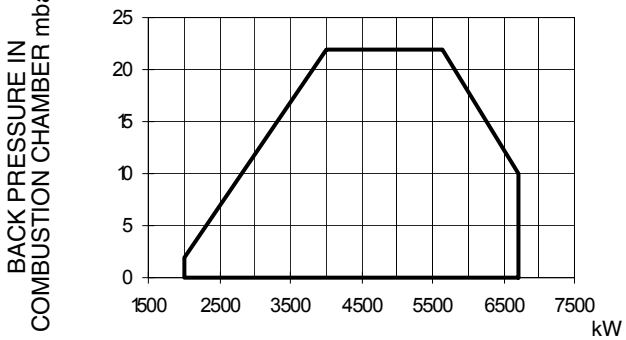


**HP525A DN65-80-100**

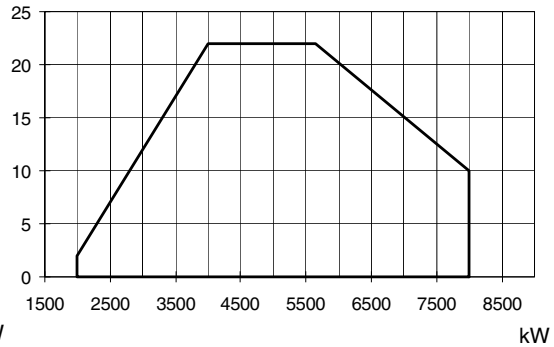


To get the input in kcal/h, multiply value in kW by 860.

Data are referred to standard conditions: atmospheric pressure at 1013mbar, ambient temperature at 15°C.

**NOTE:** The performance curve is a diagram that represents the burner performance in the type approval phase or in the laboratory tests, but does not represent the regulation range of the machine. On this diagram the maximum output point is usually reached by adjsuting the combustion head to its “MAX” position (see paragraph “Adjusting the combustion head”); the minimum output point is reached setting the combustion head to its “MIN” position. During the first ignition, the combustion head is set in order to find a compromise between the burner output and the generator specifications, that is why the minimum output may be different from the Performance curve minimum.

## *Pressure in the network - gas rate curves*

**HP91A**

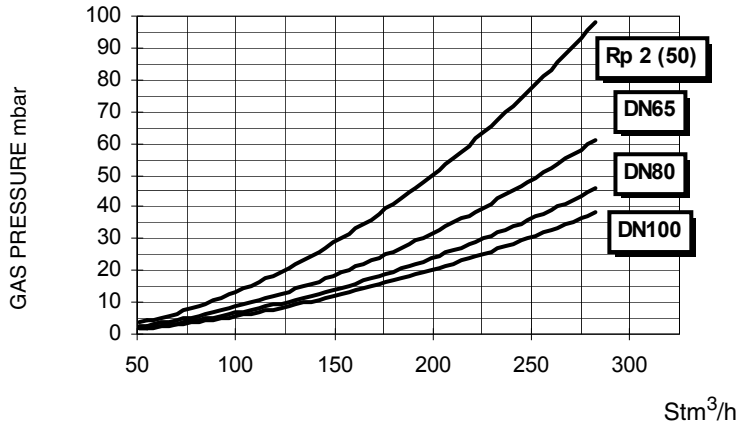


**HP92A**

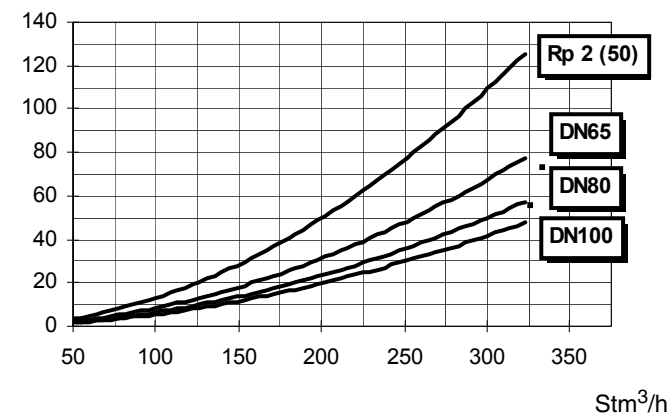


**HP93A**

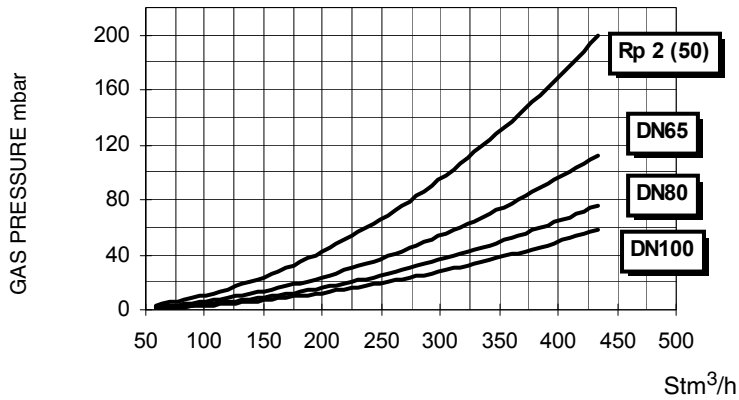


**HP512A**

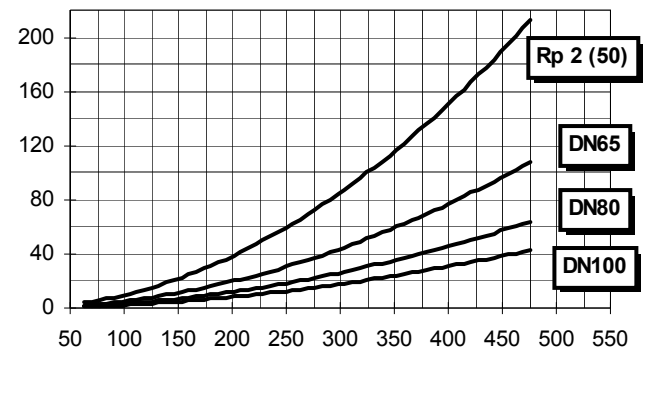


**HP515A**

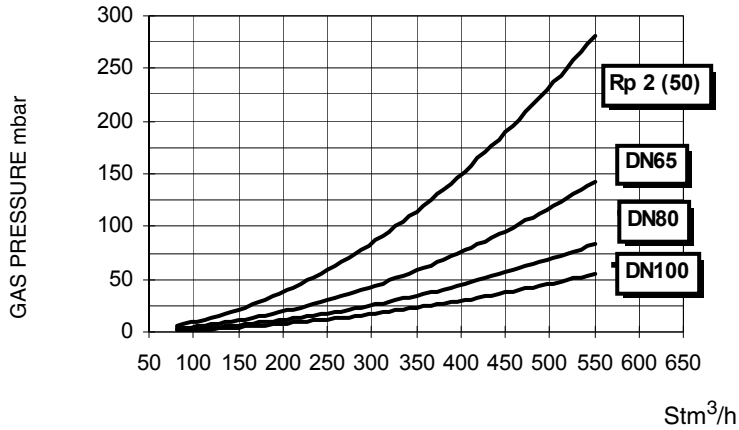


**HP520A**

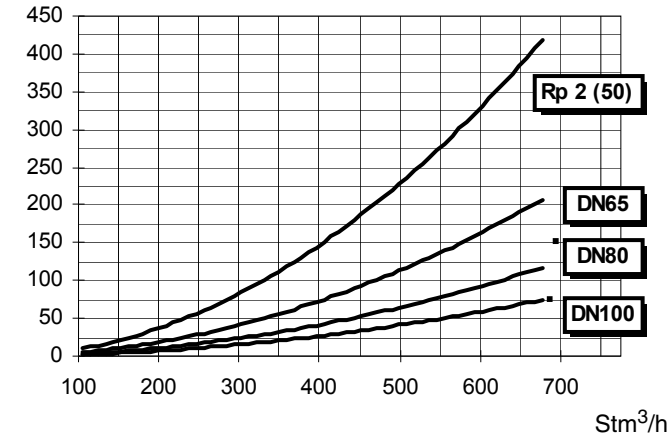


**HP525A Rp2**

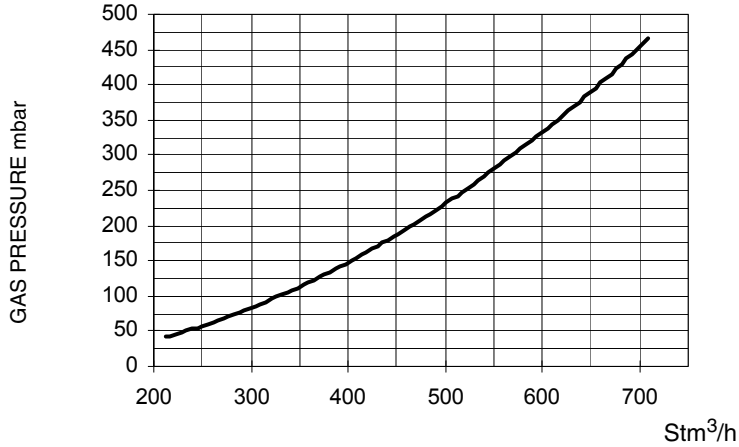


**HP525A DN65-80-100**

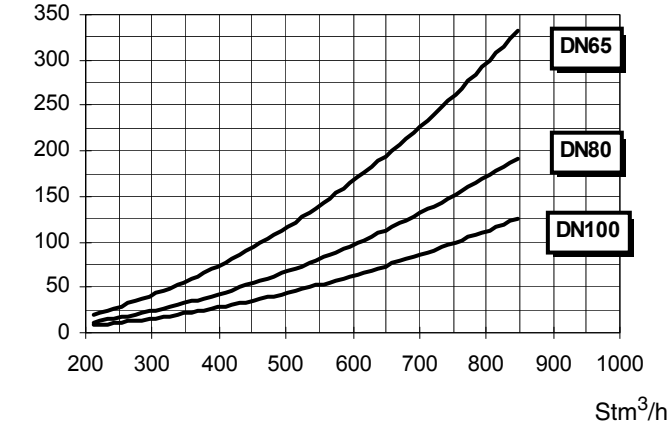

Caution: the gas rate value is quoted on the x-axis, the related network pressure is quoted on the y-axis (pressure value in the combustion chamber is not included). To know the minimum pressure at the gas train inlet, necessary to get the requested gas rate, add the pressure value in the combustion chamber to the value read on the y-axis.

## MOUNTINGS AND CONNECTIONS

**Packing**

The burners are despatched wooden cages whose dimensions:

- **9xA series: 1730mm x 1280mm x 1020mm (L x P x H)**
- **5xxA series: 1730mm x 1430mm x 1130mm (L x P x H)**

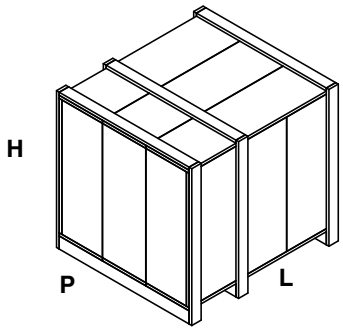


Packing cases of this kind are affected by humidity and are not suitable for stacking. The following are placed in each packing case:

- burner with gas train detached;
- gasket to be inserted between the burner and the boiler;
- flexible oil pipes;
- oil filter;
- envelope containing this manual

To get rid of the burner's packing, follow the procedures laid down by current laws on disposal of materials

To get rid of the burner's packing, follow the procedures laid down by current laws on disposal of materials.

### *Handling the burner*

| | |
|---|---|
| ⚠ | **ATTENTION! The lhandling operations must be carried out by specialised and trained personnel. If these operations are not carried out correctly, the residual risk for the burner to overturn and fall down still persists.** |
| | **To move the burner, use means suitable to support its weight (see paragraph "Technical specifications").** |
| | **The unpacked burner must be lifted and moved only by means of a fork lift truck.** |

The burner is mounted on a stirrup provided for handling the burner by means of a fork lift truck: the forks must be inserted into the A anb B ways. Remove the stirrup only once the burner is installed to the boiler.

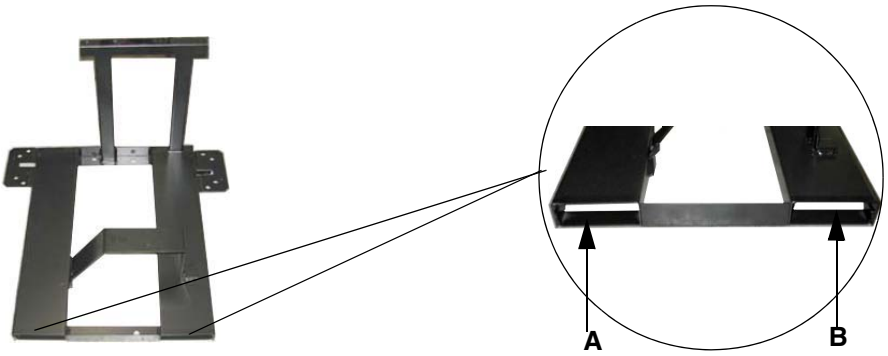


### *Fitting the burner to the boiler*

To install the burner into the boiler, proceed as follows:

1 make a hole on the closing door of the combustion chamber as described on paragraph "Overall dimensions")
2 place the burner to the boiler: lift it up and handle it according to the procedure described on paragraph "Handling the burner";
3 place the 4 stud bolts (5) on boiler's door, according to the burner's drilling template described on paragraph "Overall dimensions";
4 fasten the 4 stud bolts;
5 place the gasket on the burner flange;
6 install the burner into the boiler;
7 fix the burner to the stud bolts, by means of the fixing nuts, according to the next picture.
8 After fitting the burner to the boiler, ensure that the gap between the blast tube and the refractory lining is sealed with appropriate insulating material (ceramic fibre cord or refractory cement).

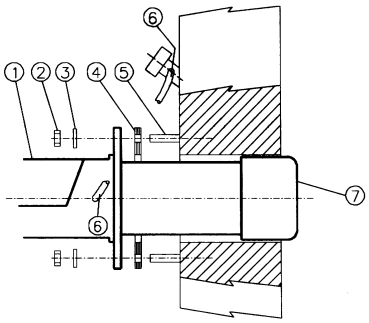


**Keys**

1 Burner
2 Fixing nut
3 Washer
4 Sealing gasket
5 Stud bolt
7 Blast tube

The burner is designed to work positioned according to the picture below. For different installations, please contact the Technical Department.

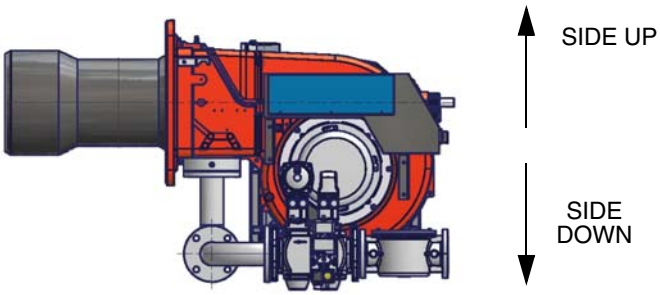


### *Matching the burner to the boiler*

The burners described in this manual have been tested with combustion chambers that comply with EN676 regulation and whose dimensions are described in the diagram . In case the burner must be coupled with boilers with a combustion chamber smaller in diameter or shorter than those described in the diagram, please contact the supplier, to verify that a correct matching is possible, with respect of the application involved. To correctly match the burner to the boiler verify the necessary input and the pressure in combustion chamber are included in the burner performance curve; otherwise the choice of the burner must be revised consulting the burner manufacturer. To choose the blast tube lenght follow the instructions of the boiler manufacturer. In absence of these consider the following:

- Cast-iron boilers, three pass flue boilers (with the first pass in the rear part): the blast tube must protrude no more than 100 mm into the combustion chamber.
- Pressurised boilers with flame reversal: in this case the blast tube must penetrate at least 50 - 100 mm into combustion chamber in respect to the tube bundle plate.

The length of the blast tubes  does not always allow this requirement to be met, and thus it may be necessary to use a suitably-sized spacer to move the burner backwards or to design a blast tube tha suites the utilisation (please, contact the manifacturer).

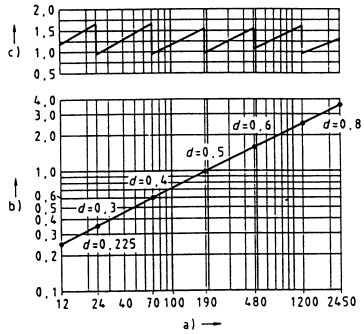


Fig. 4

**Key**

a) Heat output in kW

b) Lenght of the flame tube in meters

c) Flame tube firing intensity in MW/m$^3$

d) Combustion chamber diameter (m)

Fig. 4 - Firing intensity, diameter and lenght of the test flame tube as a function of the heat input in kW.

### *Gas train connections*

The diagrams show the components of the gas train included in the delivery and which must be fitted by the installer.The diagrams are in compliance with the current laws.

| | |
|---|---|
| ⚠ | **ATTENTION:** BEFORE EXECUTING THE CONNECTIONS TO THE GAS PIPE NETWORK, BE SURE THAT THE MANUAL CUTOFF VALVES ARE CLOSED. READ CAREFULLY THE “WARNINGS” CHAPTER AT THE BEGINNING OF THIS MANUAL. |

**Gas train - 1**Gas train with valves group VGD 20/40.. with built-in gas pressure governor + VPS504 gas proving system

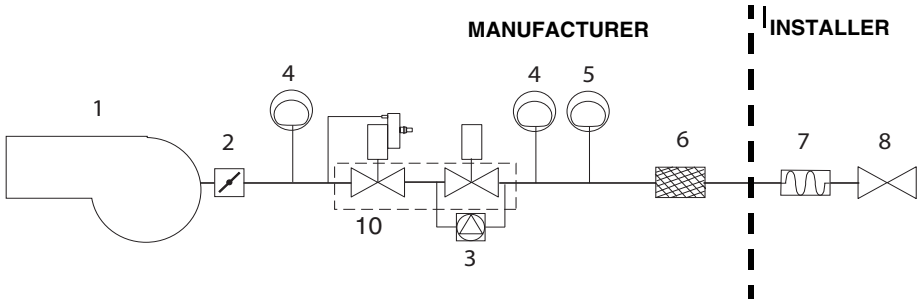


**Gas train - 2**Gas train with valves group MBC 1200SE (2 valves + gas filter + pressure governor) + VPS504 gas proving system

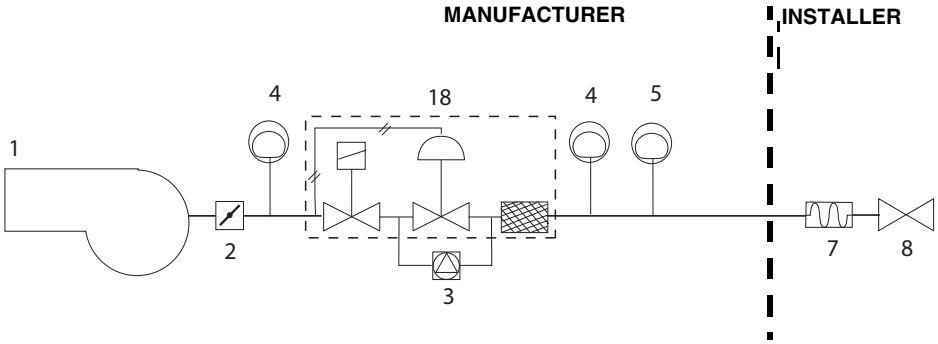


**Gas train - 3**(DN65/80/100)

Gas train with valves group MBC 1900/3100/5000SE (2 valves + gas filter + pressure governor) + VPS504 gas proving system

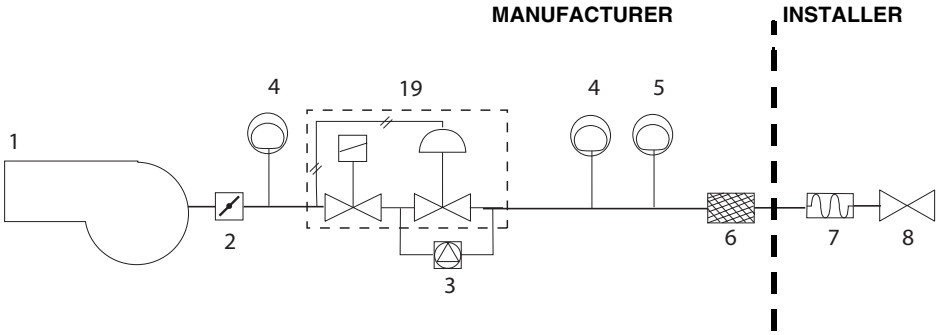


**Key**

| | | | |
|---|---|---|---|
| 1 | Burner | | |
| 2 | Butterfly valve | 8 | Manual cutoff valve |
| 3 | Gas proving system | 10 | VGD Valves group |
| 4 | Maximum gas pressure switch (option*) | 14 | Pressure stabiliser with filter |
| 5 | Minimum gas pressure switch | 15 | Pilot gas valve |
| 6 | Gas filter | 18 | MBC Valves group (2” with filter provided) |
| 7 | Bellow joint | 19 | MBC Valves group (DN65/80/100) |

*Note: the high gas pressure switch can be mounted either upstream the gas valve or downstream the gas valves but upstream the butterfly gas valve.

## *Assembling the gas grain*

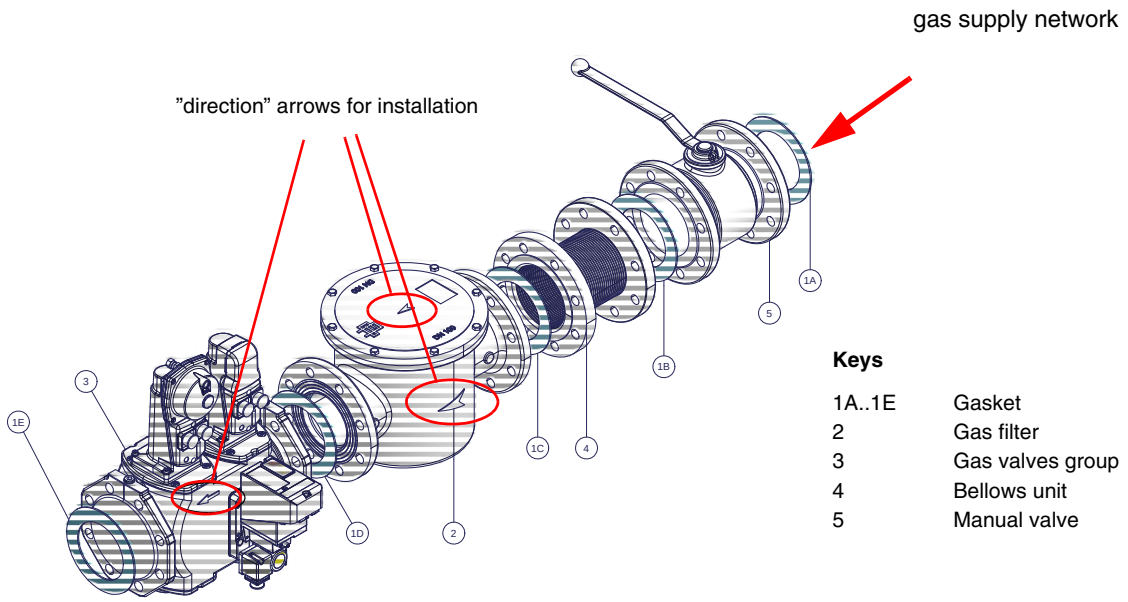


Fig. 5 - Example of gas train

To mount the gas train, proceed as follows:

1-a) in case of threaded joints: use proper seals according to the gas used;

1-b) in case of flanged joints: place a gasket (no. 1A..1E - Fig. 5) between the elements

**NOTE:** the bellow joint, the manual valve and the gaskets are not part of the standard supply.

| | |
|---|---|
| ⚠ | **ATTENTION:** once the gas train is mounted according to the diagram on Fig. 5, the gas proving test mus be performed, according to the procedure set by the laws in force. |

The procedures of installation fo the gas valves are showed in the next paragraphs, according to the gas train used:

- threaded gas trains with Multibloc Dungs MBC..SE 1200 or Siemens VGD20..
- flanged gas trains with Multibloc Dungs MBC..SE 1900-3100-5000 or Siemens VGD40..

| | |
|---|---|
| ⚠ | **ATTENTION:** it is recommended to mount filter and gas valves to avoid that extraneous material drops inside the valves, during maintenance and cleaning operation of the filters (both the filters outside the valves group and the ones built-in the gas valves). |

### *MULTIBLOC DUNGS MBC300-700-1200SE (Threaded valves group)*

**Mounting**

1. Mount flange onto tube lines. Use appropriate sealing agent (see Fig. 6)
2. Insert MBC...SE. Note position of O rings (see Fig. 7).
3. Tighten screws A – H
4. After installation, perform leakage and functional test.
5. Disassembly in reverse order

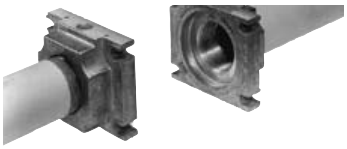

Fig. 6

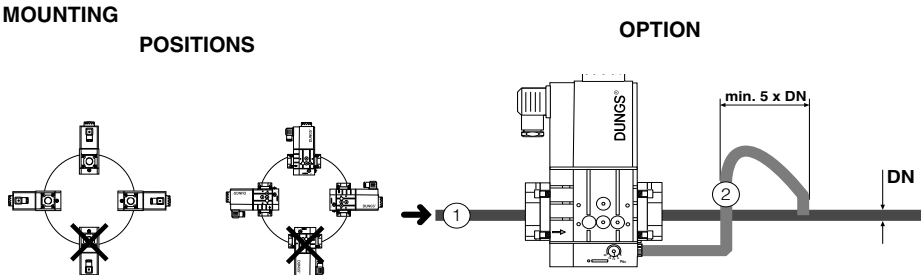


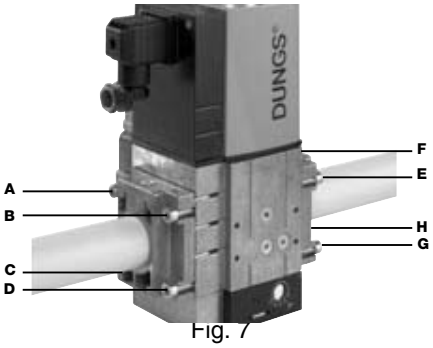


Fig. 7

**MULTIBLOCDUNGS MBC1900-3100-5000SE (Flanged valves group)**

**Mounting**

1. Insert setscrews A
2. Insert seals
3. Insert setscrews B
4. Tighten setscrews A + B.

Ensure correct seating of the seal!

6. After installation, perform leakage and functional test.
7. Disassembly in reverse order.

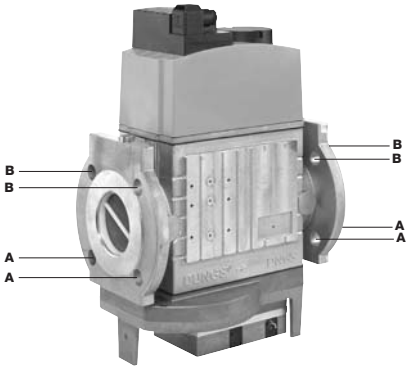


Fig. 8

**Mounting positions**

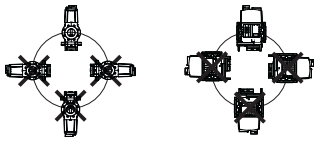

**OPTION**

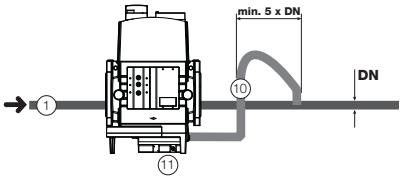


10 = pulse lines

### *Siemens VGD20.. and VGD40.. gas valves - with SKP2.. (pressure governor)*

***Mounting***

- When mounting the VGD.. double gas valve, two flanges are required (as for VGD20.. model, the flanges are threaded);
- to prevent cuttings from falling inside the valve, first fit the flanges to the piping and then clean the associated parts;
- install the valve;
- the direction of gas flow must be in accordance with the direction of the arrow on the valve body;
- ensure that the bolts on the flanges are properly tightened;
- ensure that the connections with all components are tight;
- make certain that the O-rings and gaskets between the flanges and the double gas valve are fitted.
- Connect the reference gas pipe (**TP** in figure), to the gas pressure nipples placed on the gas pipe, downstream the gas valves: gas pressure must be measured at a distance that must be at least 5 times the pipe size .

Leave the blowhole free (**SA** in figure). Should the spring fitted not permit satisfactory regulation, ask one of our service centres for a suitable replacement.

⚠ **Caution:** the SKP2 diaphragm **D** must be vertical (see Fig. 11).

⚠ **WARNING: removing the four screws BS causes the device to be unserviceable!**

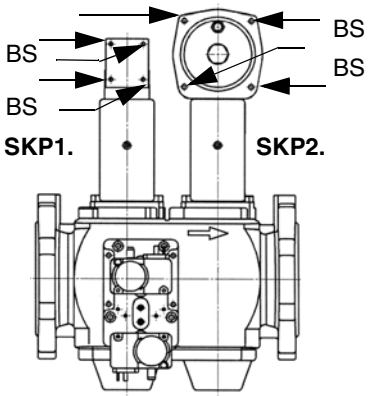


Fig. 9

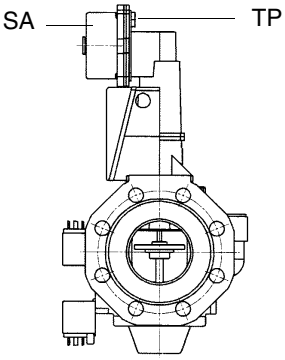


Fig. 10

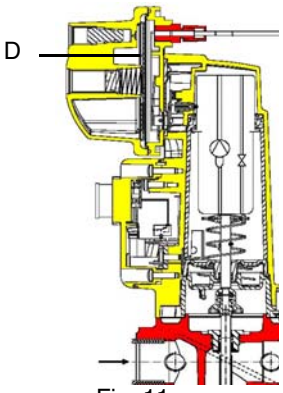


Fig. 11

SIEMENS VGD..MOUNTING POSITIONS

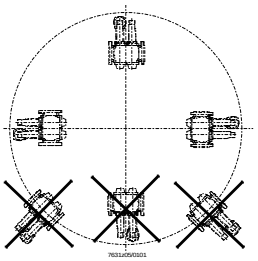

Fig. 12

### *Pressure adjusting range*

The pressure adjusting range, downstream the gas valves group, changes according to the spring provided with the valve group.

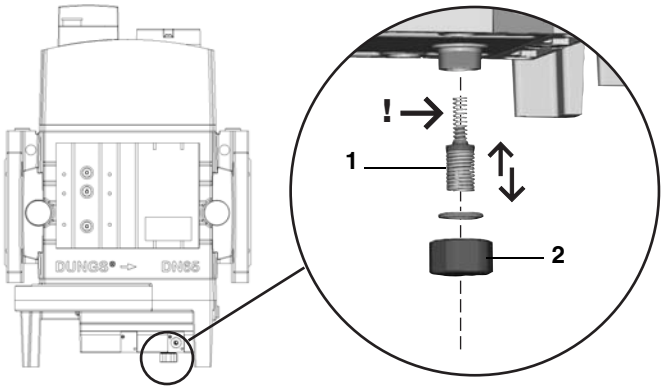


**DUNGS MBC..SE**

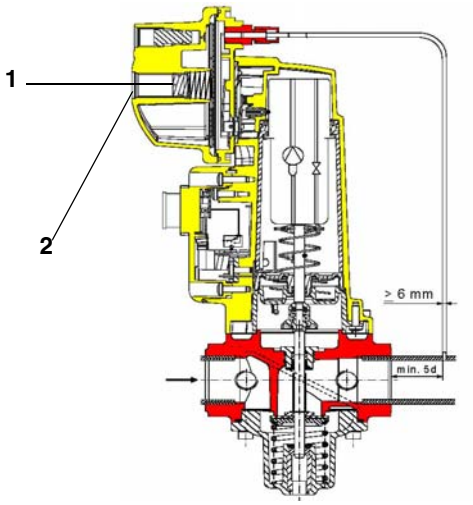


**Siemens SKP actuator**

**Keys**

1 spring

2 cap

**DUNGS MBC valves:**

| | | | | |
|---|---|---|---|---|
| ***Performance range (mbar)*** | 4 - 20 | 20 - 40 | 40 - 80 | 80 - 150 |
| ***Spring colour*** | - | red | black | green |

**Siemens VGD valves with SKP actuator :**

| | | | |
|---|---|---|---|
| ***Performance range (mbar)*** | 0 - 22 | 15 - 120 | 100 - 250 |
| ***Spring colour*** | neutral | yellow | red |

Once the train is installed, connect electrically all its elements: gas valves group, pressure switches, gas proving system.

| | |
|---|---|
| ⚠ | **ATTENTION:** once the gas train is mounted according to the diagram on Fig. 5, the gas proving test mus be performed, according to the procedure set by the laws in force. |

## *Hydraulic diagrams for light oil supplying circuits*

Fig. 13 - Gravity circuit

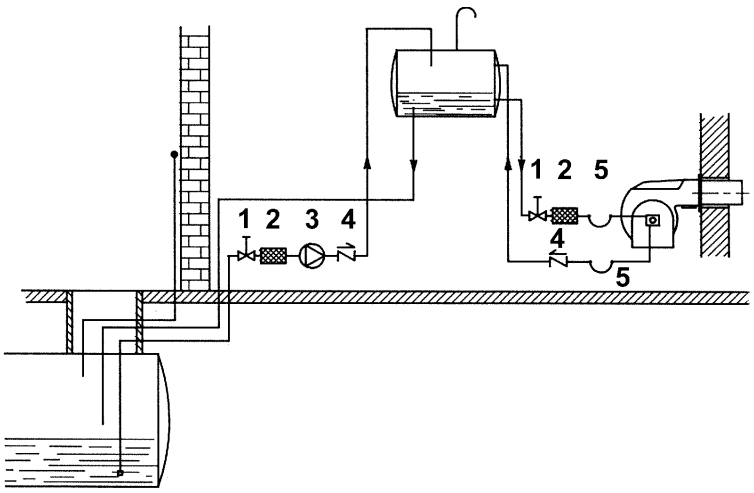


Fig. 14 - Ring circuit

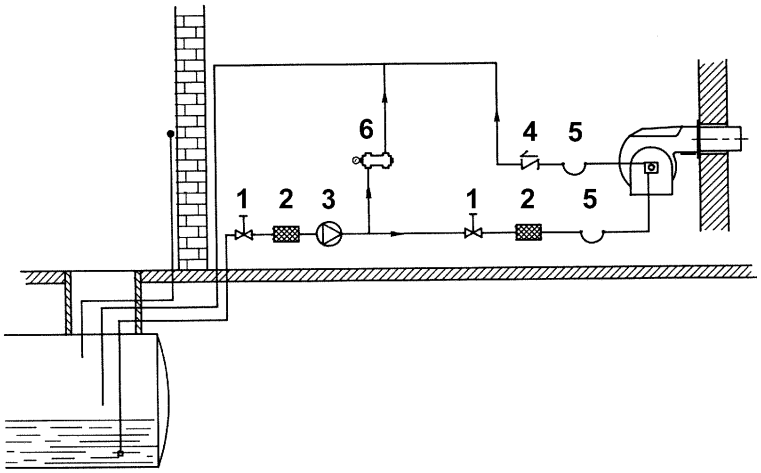


Fig. 15 - Suction circuit

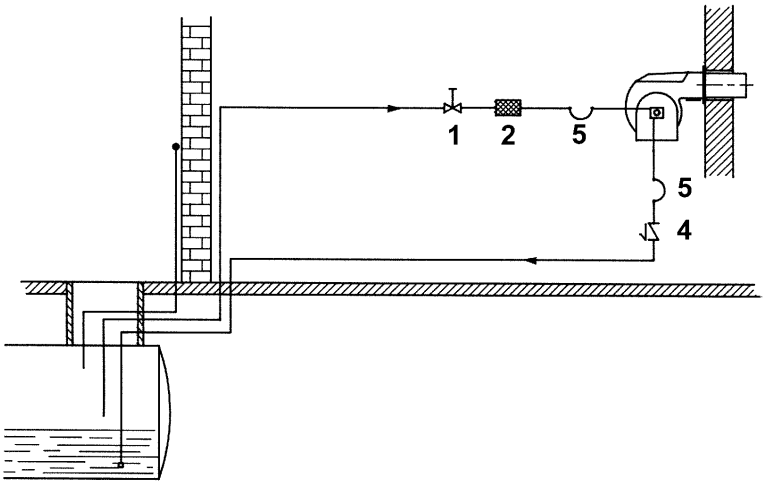


**Key**

1 Manual valve
2 Light oil filter
3 Light oil feeding pump
4 One way valve
5 Flexible hoses
6 Relief valve

**NOTE:** in plants where gravity or ring feed systems are provided, install an automatic interception device (see n. 4 - Fig. 16).

## *Light oil piping installation diagram*

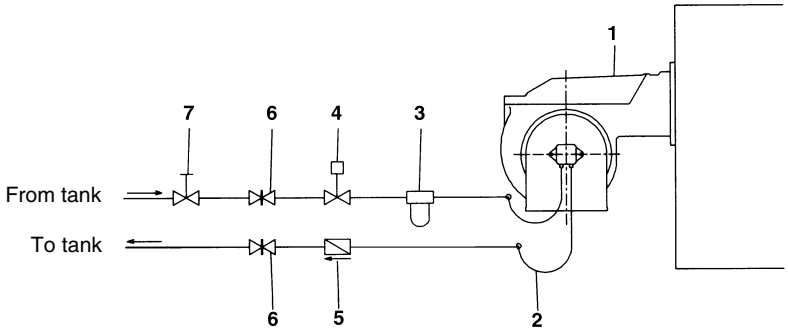


Fig. 16

**Key**

1 Burner
2 Flexible hoses (fitted)
3 Light oil filter (fitted)
4 Automatic interceptor (*)
5 One-way valve (*)
6 Gate valve
7 Quick-closing gate-valve (not in vicinity of tank or boiler)

(*) Only for installations with gravity, siphon or forced circulation feed systems. If the device installed is a solenoid valve, a timer must be installed to delay the valve closing.
The direct connection of the device without a timer may cause pump breaks.

The pumps that are used can be installed both into single-pipe and double-pipe systems.

**Single-pipe system:** a single pipe drives the oil from the tank to the pump's inlet. Then, from the pump, the pressurised oil is driven to the nozzle: a part comes out from the nozzle while the othe part goes back to the pump. In this system, the by-pass pulg, if provided, must be removed and the optional return port, on the pump's body, must be sealed by steel plug and washer.

**Double-pipe system:** as for the single pipe system, a pipe that connects the tank to the pump's inlet is used besides another pipe that connects the pum's return port to the tank, as well. The excess of oil goes back to the tank: this installation can be considered self-bleeding. If provided, the inside by-pass plug must be installed to avoid air and fuel passing through the pump.

Burners come out from the factory provided for double-stage systems. They can be suited for single-pipe system (recommended in the case of gravity feed) as decribed before.To change from a 1-pipe system to a 2-pipe-system, insert the by-pass plug **G** (as for ccw-rotation- referring to the pump shaft).

**Caution:** Changing the direction of rotation, all connections on top and side are reversed.

pipeline length in meters.

**Danfoss KSM..**

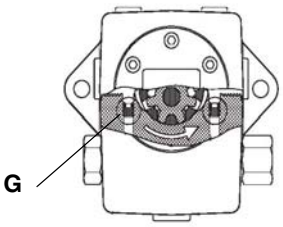


**Suntec TA**

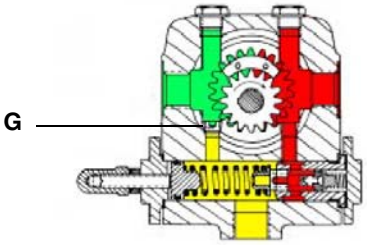


**Suntec T**

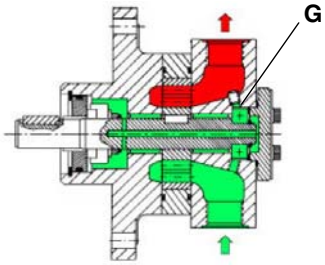


## *Bleed*

Bleeding in two-pipe operation is automatic : it is assured by a bleed flat on the piston. In one-pipe operation, the plug of a pressure gauge port must be loosened until the air is evacuated from the system.

## *About the use of fuel pumps*

- Make sure that the by-pass plug is not used in a single pipe installation, because the fuel unit will not function properly and damage to the pump and burner motor could result.
- Do not use fuel with additives to avoid the possible formation over time of compounds which may deposit between the gear teeth, thus obstructing them.
- After filling the tank, wait before starting the burner. This will give any suspended impurities time to deposit on the bottom of the tank, thus avoiding the possibility that they might be sucked into the pump.
- On initial commissioning a "dry" operation is foreseen for a considerable length of time (for example, when there is a long suction line to bleed). To avoid damages inject some lubrication oil into the vacuum inlet.
- Care must be taken when installing the pump not to force the pump shaft along its axis or laterally to avoid excessive wear on the joint, noise and overloading the gears.

- Pipes should not contain air pockets. Rapid attachment joint should therefore be avoided and threaded or mechanical seal junctions preferred. Junction threads, elbow joints and couplings should be sealed with removable sg component. The number of junctions should be kept to a minimum as they are a possible source of leakage.
- Do not use PTFE tape on the suction and return line pipes to avoid the possibility that particles enter circulation. These could deposit on the pump filter or the nozzle, reducing efficiency. Always use O-Rings or mechanical seal (copper or aluminium gaskets) junctions if possible.
- An external filter should always be installed in the suction line upstream of the fuel unit.

### *Light oil pumps*

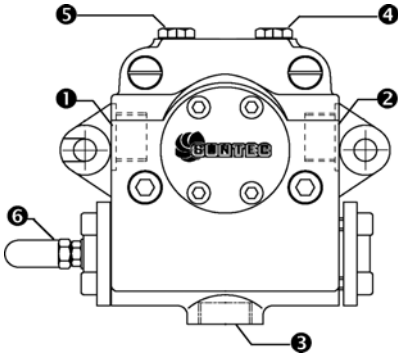


| **Suntec TA..** | |
|---|---|
| Oil viscosity | 3 ÷ 75 cSt |
| Oil temperature | 0 ÷ 150°C |
| Min. suction pressure | - 0.45 bar to avoid gasing |
| Max. suction pressure | 5 bar |
| Max. return pressure | 5 bar |
| Rotation speed | 3600 rpm max. |

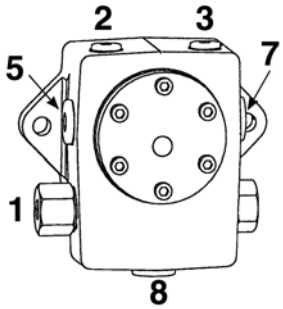


| **Danfoss KSM..** | |
|---|---|
| Oil viscosity | 2.5 ÷ 450 cSt |
| Oil temperature | -10 ÷ 160 °C |
| Max. suction pressure | 4 bar |
| Min. suction pressure | -0.45 bar to avoid gasing |
| Max. return pressure | 4 bar |
| Rotation speed | 3450 rpm max |

**Keys**

1 Pressure regulator
2 Pressure/Vacuum gauge port to measure inlet pressure/vacuum
3 Pressure gauge port
5 Suction
7 To the nozzle
8 Return

### *Suntec T pump*

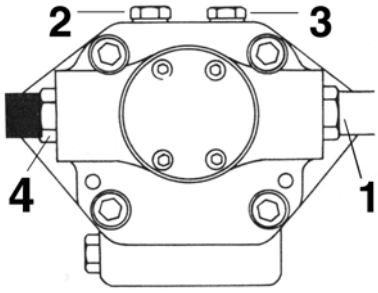


| | |
|---|---|
| Viscosity | 3 - 75 cSt |
| Oil temperature | 0 - 150 °C |
| Minimum suction pressure | - 0.45 bar to prevent gasing |
| Maximum suction pressure | 5 bar |
| Rated speed | 3600 rpm max. |

**Key**

1 Inlet G3/4
2 Pressure gauge port G1/4
3 Vacuum gauge port to measure the inlet vacuum G1/4
4 To pressure adjusting valve G3/4

"Note: pump with “C” rotation.

## *Pressure regulator valve Suntec TV*

**Pressure regulation**

Remove cap-nut 1 and the gasket 2, unscrew the lock nut 4. To increase pressure, turn adjusting screw 3 clockwise.

To decrease the pressure, turn screw anticlockwise. Tight the lock nut 4, refit the gasket 2 and the cap nut 1.

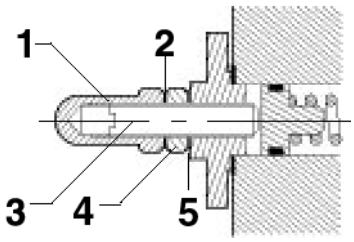


**Key**

1 Cap nut
2 Gasket
3 Adjusting screw
4 Lock nut
5 Gasket

## *Assembling the light oil flexible hoses*

To connect the flexible light oil hoses to the pump, proceed as follows, according to the pump provided:

1 remove the closing nuts **A** and **R** on the inlet and return connections of the pump;

2 screw the rotating nut of the two flexible hoses on the pump **being careful to avoid exchanging the inlet and return lines**: see the arrows marked on the pump that show the inlet and the return (see prevoius paragraph).

| Suntec TA.. | Danfoss KSM.. | Suntec T |
|---|---|---|
| | | 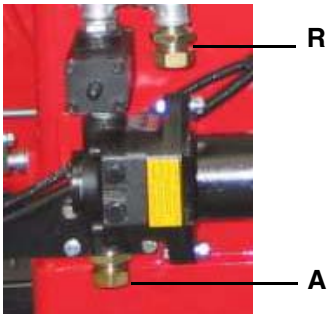  |

## *Electrical connections*

| | |
|---|---|
| ⚠ | **Respect the basic safety rules. make sure of the connection to the earthing system. do not reverse the phase and neutral connections. fit a differential thermal magnet switch adequate for connection to the mains.** |
| | **ATTENTION: before executing the electrical connections, pay attention to turn the plant's switch to OFF and be sure that the burner's main switch is in 0 position (OFF) too. Read carefully the chapter "WARNINGS", and the "Electrical connections" section.** |

| | |
|---|---|
| ⚠ | **WARNING: The burner is provided with a jumper between terminals 6 and 7; in the event of connecting the high/low flame thermostat remove this jumper before connecting the thermostat.** |
| | **IMPORTANT: while connecting electric supply wires to burner's teminal block be sure that ground wire should be longer than phase and neutral ones.** |

- Remove the cover of the electrical board mounted on the burner.
- Execute the electrical connections to the power supply terminal board as shown here following, check the direction of rotation of the fan motor (see next paragraph) and refit the electrical board cover.

## *Electrical Wiring Diagram for Burners Fitted with Printed Circuit*

**High-low flame burners**

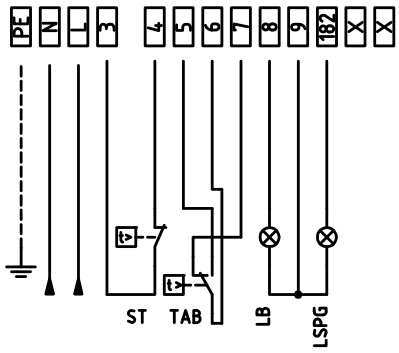


**Fully modulating burners**

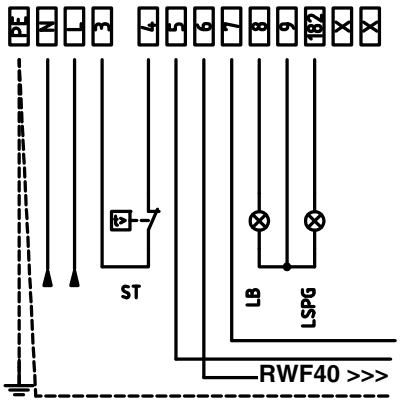


**Electric motor connection**

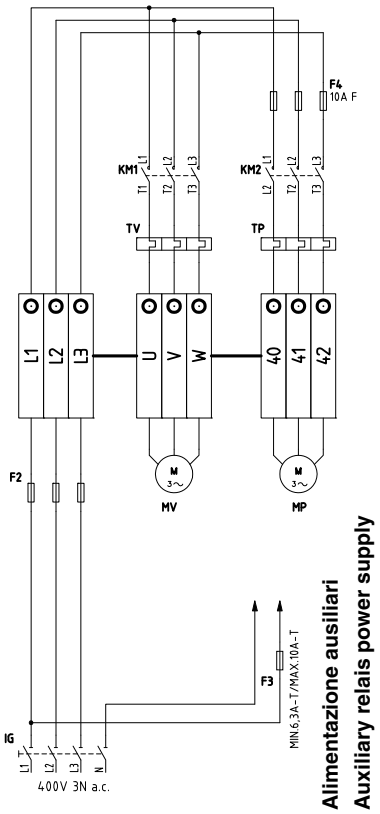


**Probes connection**

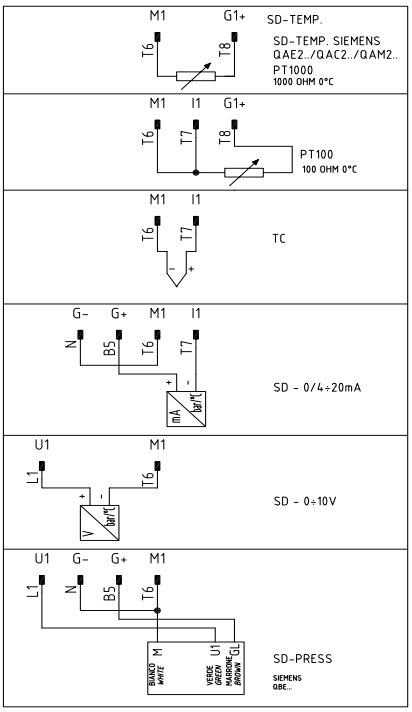


**Power supply terminal board**

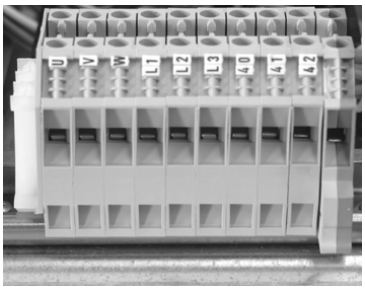

**Terminal board for connections on printed circuit**

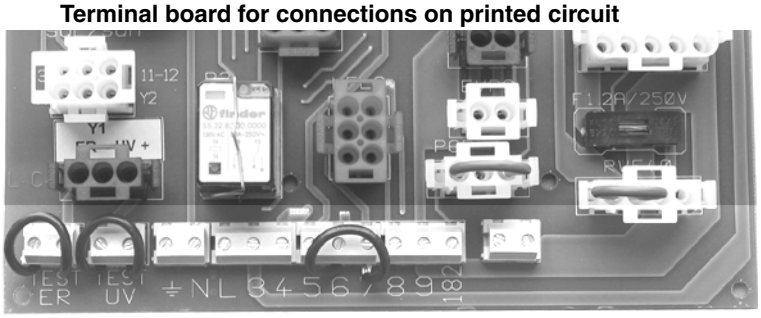

### *Rotation of fan motor and pump motor*

Once the electrical connection of the burner is executed, remember to check the rotation of the motor. The motor should rotate according to the indication on the body. In the event of wrong rotation, reverse the three-phase supply and check again the rotation of the motor.

**NOTE (exceptHP525A): burners are supplied for three-phase 400V supply, and in the case of three-phase 230V supply it is necessary to modify the electrical connections into the terminal box of the electric motor and replace the overload tripped relay.**

| | |
|---|---|
| ⚠ | **CAUTION: check the motor thermal cut-out adjustment** |

## *Connecting burners not fitted with printed circuit*

**High-low flame burners**

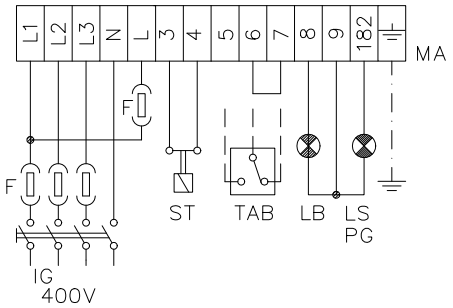


**Fully modulating burners**

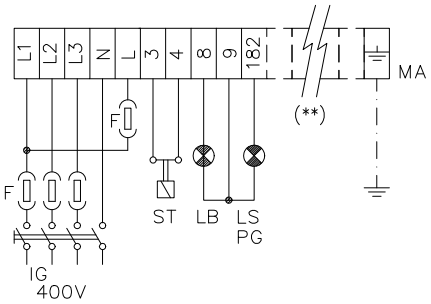


**Probes connection**

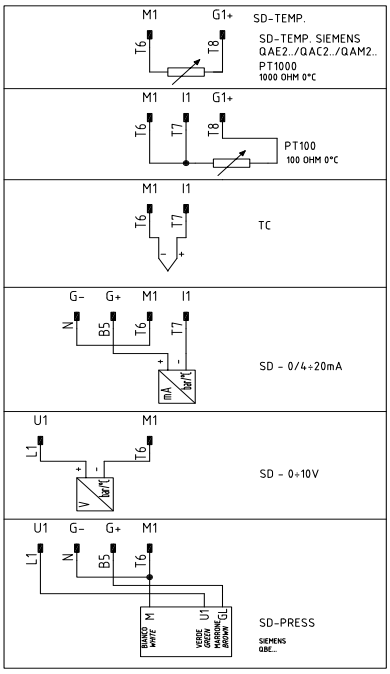


Fig. 17

(**) Probes connection (Fig. 17)

## ADJUSTMENTS

### *Combustion head gas pressure curves depending on the flow rate*

**Curves are referred to pressure = 0mbar in the combustion head!**

The curves referred to the gas pressure in the combustion head, depending on the gas flow rate, are referred to the burner properly adjusted (percentage of residual $O_2$ in the flues as shown in the “Recommended combustion values” table and CO in the standard limits). During this stage, the combustion head, the gas butterfly valve and the actuator are at the maximum opening. Refer to Fig. 18, showing the correct way to measure the gas pressure, considering the values of pressure in combustion chamber, surveyed by means of the pressure gauge or taken from the boiler’s Technical specifications.

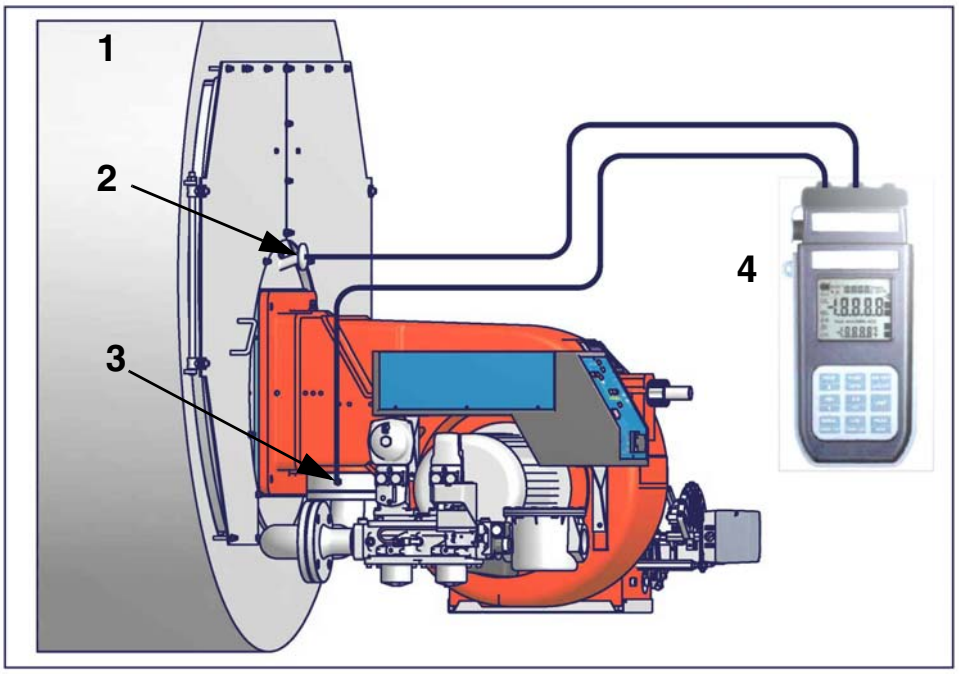


Fig. 18

**Key**

1 Generator
2 Pressure outlet on the combustion chamber
3 Gas pressure outlet on the butterfly valve
4 Differential pressure gauge

### *Measuring the gas pressure in the combustion head*

In order to measure the pressure in the combustion head, insert the pressure gauge probes: one into the combustion chamber's pressure outlet (Fig. 18-2) to get the pressure in the combustion chamber and the other one into the butterfly valve's pressure outlet of the burner (Fig. 18-3). On the basis of the measured differential pressure, it is possible to get the maximum flow rate: in the pressure - rate curves (showed on the next paragraph), it is easy to find out the burner's output in $Stm^3/h$ (quoted on the x axis) from the pressure measured in the combustion head (quoted on the y axis). The data obtained must be considered when adjusting the gas flow rate.

**NOTE: THE PRESSURE-RATE CURVES ARE GIVEN AS INFORMATION ONLY; FOR A PROPER SETTING OF THE GAS RATE, PLEASE REFER TO THE GAS METER READING.**

### *Pressure in combustion head - gas rate curves*

**HP91A**

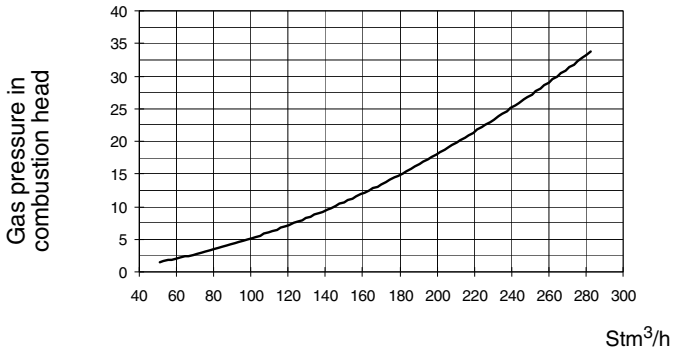


**HP92A**

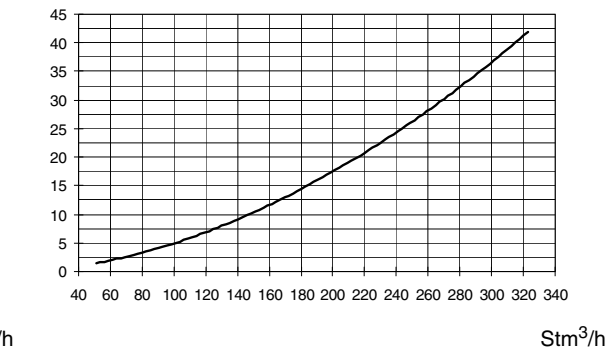


**HP93A**

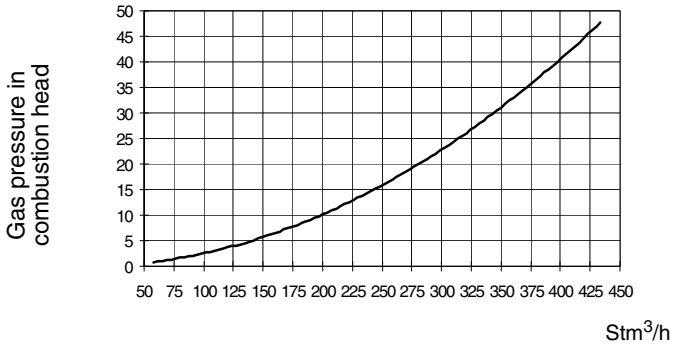


**HP512A**

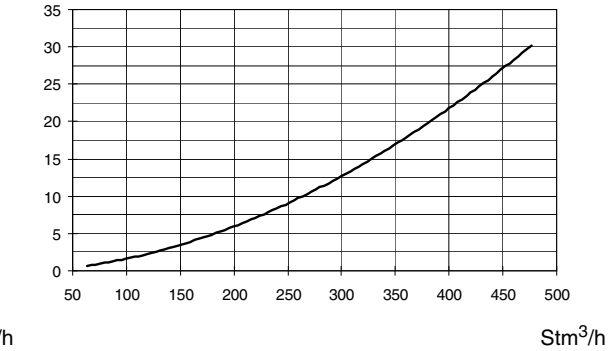


**HP515A**

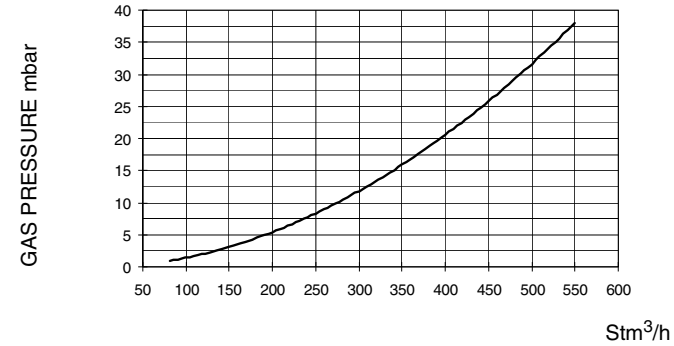


**HP520A**

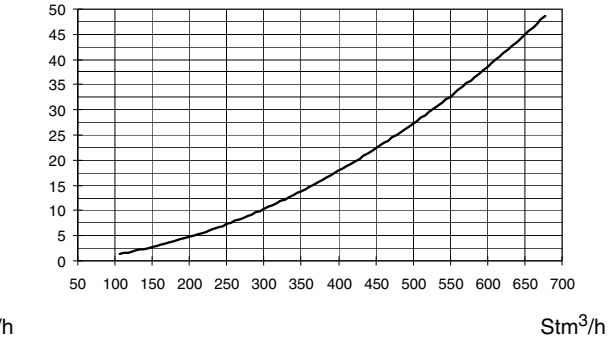


**HP525A Rp2**

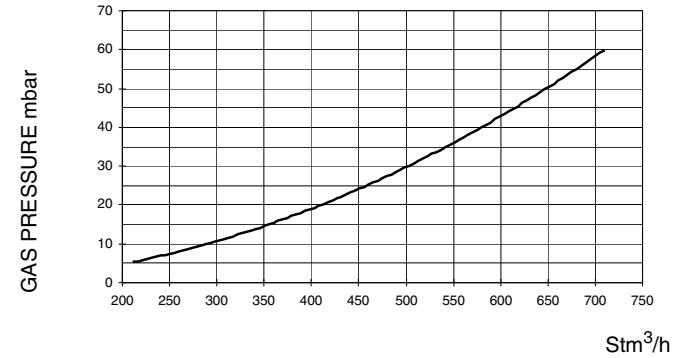


**HP525A DN65-80-100**

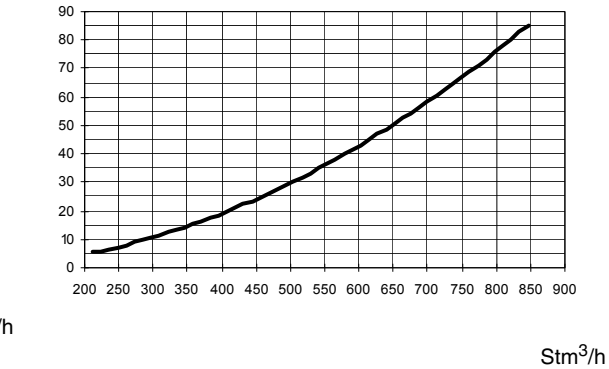

## *Adjustments*

| | |
|---|---|
| ⚠ | ***ATTENTION:*** **before starting the burner up, be sure that the manual cutoff valves are open and check that the pressure upstream the gas train complies the value quoted on paragraph "Technical specifications". Be sure that the mains switch is closed.** |
| | ***ATTENTION: During commissioning operations, do not let the burner operate with insufficient air flow (danger of formation of carbon monoxide); if this should happen, make the gas decrease slowly until the normal combustion values are achieved.*** |
| | **WARNING: NEVER LOOSE THE SEALED SCREWS! OTHERWISE, THE DEVICE WARRANTY WILL BE INVALIDATE!** |

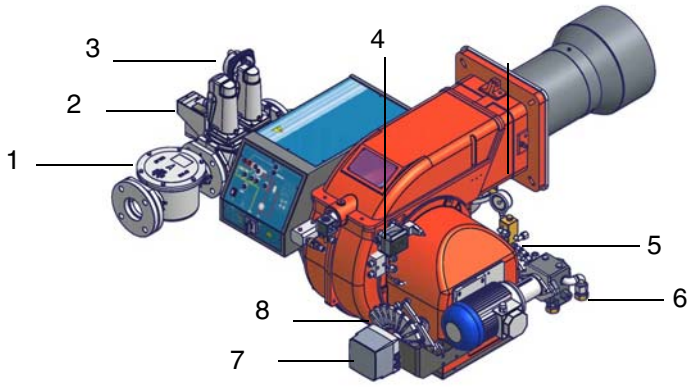


Fig. 19

**Keys**

1 Gas filterl
2 Gas proving system
3 Gas valves
4 Air pressure switch
5 Oil Adjusting cam
6 Fuel pump
7 Actuator
8 Gas Adjusting cam

### *Gas Filter*

The gas filters remove the dust particles that are present in the gas, and prevent the elements at risk (e.g.: burners, counters and regulators) from becoming rapidly blocked. The filter is normally installed upstream from all the control and on-off devices.

### VPS504 Gas proving system

The VPS504 check the operation of the seal of the gas shut off valves. This check is carried out as soon as the boiler thermostat gives a start signal to the burner, creating, by means of the diaphragm pump inside it, a pressure in the test space of 20 mbar higher than the supply pressure.

When wishing to monitor the test, install a pressure gauge ranged to that of the pressure supply point PA.

If the test cycle is satisfactory, after a few seconds the consent light LC (yellow) comes on. In the opposite case the lockout light LB (red) comes on.

To restart it is necessary to reset the appliance by pressing the illuminated pushbutton LB.

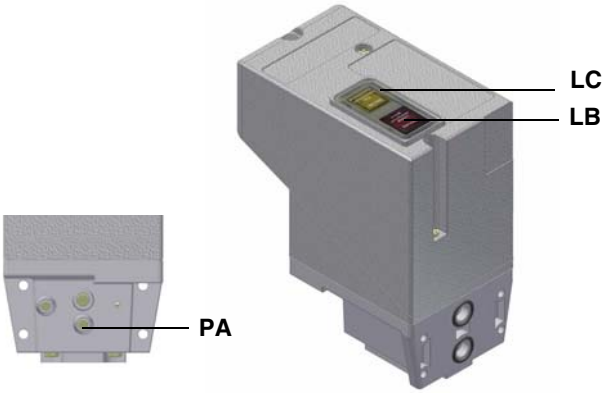


Fig. 20

### *Actuator*

The actuator provided can be either berger STM30../Siemens SQM40.. (see pag. 27) or Siemens SQL33.. (see pag. 28).

| | |
|---|---|
| ⚠ | **IMPORTANT! the combustion air excess must be adjusted according to the in the following chart:** |

| Recommended combustion parameters | | |
|---|---|---|
| Fuel | Recommended (%) $CO_2$ | Recommended (%) $O_2$ |
| Natural gas | 9 ÷ 10 | 3 ÷ 4.8 |
| Light oil | 11.5 ÷ 13 | 2.9 ÷ 4.9 |

### *Adjustments - brief description*

Adjust the air and gas flow rates at the maximum output (“high flame”) first, by means of the air damper and the adjusting cam respectively.

- Check that the combustion parameters are in the suggested limits.
- Check the flow rate measuring it on the counter or, if it was not possible, verifying the combustion head pressure by means of a differential pressure gauge, as described on par. “Measuring the gas pressure in the combustion head” on page 24.
- Then, adjust the combustion values corresponding to the points between maximum and minimum: set the shape of the adjusting cam foil. The adjusting cam sets the air/gas ratio in those points, regulating the opening-closing of the throttle gas valve.
- Set, now, the low flame output, acting on the low flame microswitch of the actuator in order to avoid the low flame output increasing too much or that the flues temperature gets too low to cause condensation in the chimney.

### *Adjustment procedure*

To change the burner setting during the testing in the plant, follow the next procedure.

On the DUNGS MBC..SE gas valves group, set the pressure regulator to 1/3 of its stroke, using a 2.5 allen key.

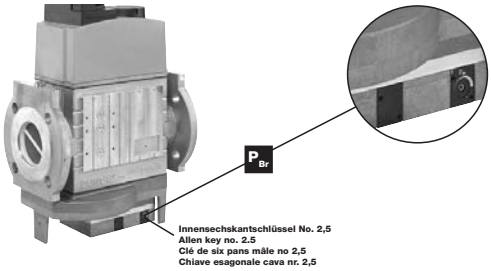


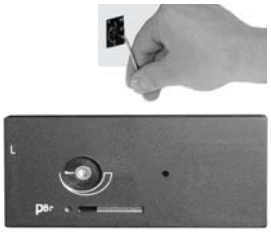


Pressure setting

The burner is factory-set wih the adjusting plate holes fully open, and the combustion head at its MAX position, so it is fit to work at the maximum output.

To adjust the gas flow, partially close the holes, as follows:

| | |
|---|---|
| ⚠ | **CAUTION:** perform these adjustments once the burner is turned off and cooled. |

1 loosen the three **V** screws that fix the adjusting plate **D**;

2 insert a screwdriver on the adjusting plate notches and let it move CW/CCW as to open/close the holes;

3 once the adjustmet is performed, fasten the **V** screws.

- HP91A - HP92A - HP93A

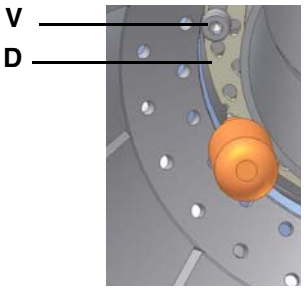


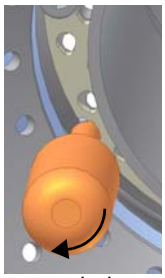

open holes

closed holes

- HP512A - HP515A - HP520A - HP525A

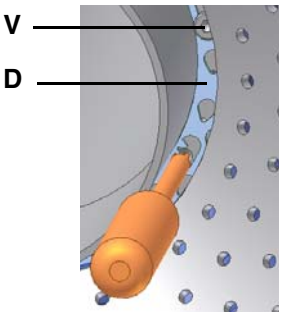

open holes

closed holes

Now, adjust the burner according to the actuator model provided.

### *Air and Gas Flow Rate Settings by means of Berger STM30.. / Siemens SQM40.. actuator*

1 set GAS fuel by means of the burner **CM** switch (it is placed on the burner control panel - see Fig. 32)

2 check the fan motor rotation (see page 22).

3 Before starting the burner up, drive the high flame actuator microswitch matching the low flame one (in order to let the burner operates at the lowest output) to safely achieve the high flame stage.

4 Start the burner up by means of the thermostat series and wait until the pre-purge time comes to an end and that the burner starts up;

5 drive the burner to high flame stage, by means fo the thermostat **TAB** (high/low flame thermostat - see Wiring diagrams), as far as fully-modulating burners, see related paragraph.

6 Then move progressively the microswitch to higher values until it reaches the high flame position; always check the combustion values and eventually adjusting the gas by means of the valves group governor.

Berger STM30

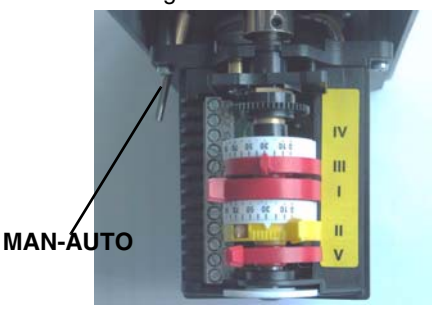


Siemens SQM40

**Actuator cams**

| | |
|---|---|
| I | High flame |
| II | Stand-by and Ignition |
| III | Low flame - gas |
| IV | Low flame - oil (SQM40..) |
| V | Low flame - oil (STM30..) |

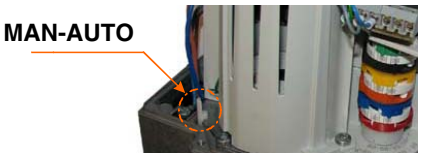


7 go on adjusting air and gas flow rates: check, continuosly, the flue gas analisys, as to avoid combustion with little air; dose the air according to the gas flow rate change following the steps quoted below;

8 acting on the pressure stabiliser of the valves group, adjust the **gas flow rate in the high flame stage** as to meet the values requested by the boiler/utilisation:

**- Siemens VGD valves group:** remove cap **T** and act on the **VR** adjusting screw to increase or decrease the pressure and consequently the gas rate; screwind **VR** the rate increases, unscrewing it decreases (see next figure).

**- Dungs MBC..SE valves group:** act on its pressure governor to increase or decrease the pressure and consequently the gas rate.

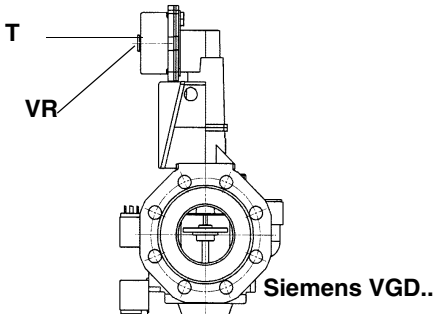


Siemens VGD..

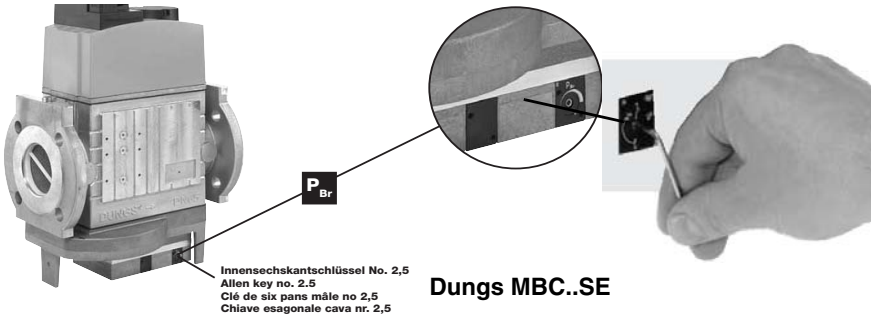


Dungs MBC..SE

:

9 To adjust the **air flow rate in the high flame stage**, loose the **RA** nut and screw **VRA** as to get the desired air flow rate: moving the rod **TR** towards the air damper shaft, the air damper opens and consequently the air flow rate increases, moving it far from the shaft the air damper closes and the air flow rate decreases.

**Note:** once the procedure is perfomed, be sure that the blocking nut **RA** is fasten. Do not change the position of the air damper rods.

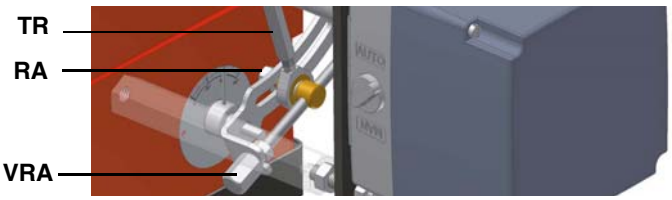


10 Only if necessary, change the combusiton head position: to let the burner operate at a lower output, loose the **VB** screw and move progressively back the combustion head towards the MIN position, by turning clockwise the **VRT** ring nut. Fasten **VB** screw when the adjustment is accomplished.

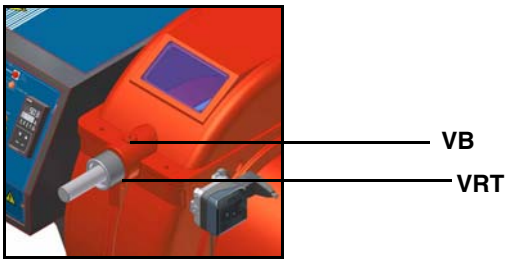


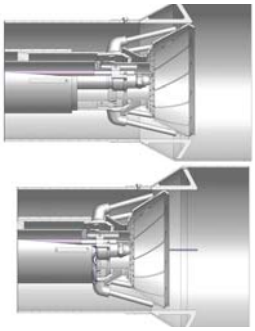

"MAX" head position

"MIN" head position

**Attention!** if it is necessary to change the head position, repeat the air and gas adjustments described above.

11 the air and gas rate are now adjusted at the maximum power stage, go on with the point to point adjustement on the **SV1** (gas side) adjusting cam as to reach the minimum output point.

12 as for the point-to-point regulation, move the gas low flame microswitch (cam III) a little lower than the maximum position (90°);

13 set the **TAB** thermostat to the minimum (as far as fully-modulating burners, see related paragraph) in order that the actuator moves progressively towards the low flame position;

14 move cam III to the minimum to move the actuator towards the low flame until the two bearings find the adjusting screw that refers to the lower position: screw **V1** to increase the rate, unscrew to decrease.

15 Move again cam III towards the minimum to meet the next screw on the adjusting cam and repeat the previous step; go on this way as to reach the desired low flame point.

16 Now adjust the pressure switches (see next par.).

### *Adjustment by the Siemens SQL33.. actuator*

1 turn the burner on by setting GAS fuel by means of the burner **CM** switch (it is placed on the burner control panel - see page 55)

2 check the fan motor rotation (see page 22).

3 Start the burner up by means of the thermostat series and wait until the pre-purge time comes to an end;Start the burner up by means of the thermostat series and wait until the pre-purge time comes to an end;

4 the burner starts up with the actuator on the ignition position, set it to the **MAN** (manual mode), by the **MAN/AUTO** selector (ignition position= read on the air damper index **ID1** - see picture on pag.27);

5 disconnect the **TAB** thermostat removing the wire from the terminal no. 6 or by setting MAN on the RWF40 modulatore or by setting 0 by means of the **CMF** switch (only for fully-modulating burners);

6 manually drive the adjusting cam **SV1** to the high flame position and set the actuator to the AUTO mode (by the related switch - see picture) to lock the adjusting cam.manually drive the adjusting cam **SV1** to the high flame position and set the actuator to the AUTO mode (by the related switch - see picture) to lock the adjusting cam.

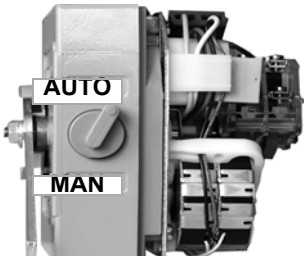


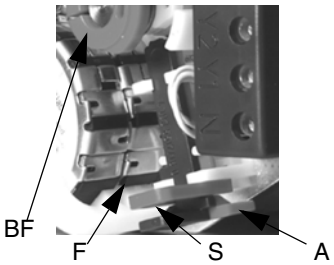


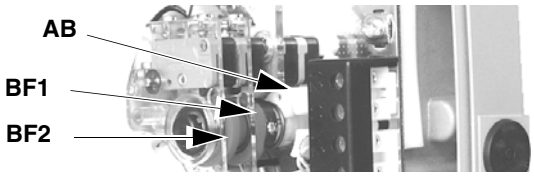


**SQL33.. actuator cams**

A = (red) cam locking lever for "high flame"
S = (green) cam locking lever for "stand-by and ignition"
F = plastic cam
BF1 = Low flame (gas)
BF2 = Low flame (oil)

7 go on adjusting air and gas flow rates: check, continuosly, the flue gas analisys, as to avoid combustion with little air; dose the air according to the gas flow rate change following the steps below;

8 acting on the pressure stabiliser of the valves group, adjust **the gas flow rate in the high flame stage** as to meet the values requested by the boiler/utilisation:

**- Siemens VGD valves group:** remove cap **T** and act on the **VR** adjusting screw to increase or decrease the pressure and consequently the gas rate; screwind **VR** the rate increases, unscrewing it decreases (see next figure).

**- Dungs MBC..SE valves group:** act on its pressure governor to increase or decrease the pressure and consequently the gas rate.

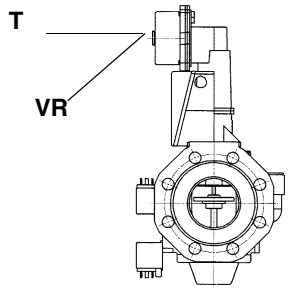


**Siemens VGD..**

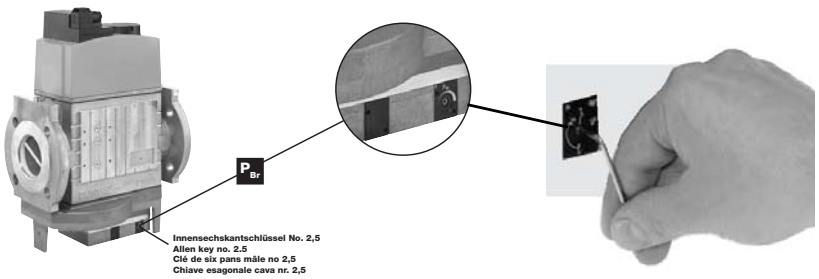


**Dungs MBC..SE**

9 To adjust the **air flow rate in the high flame stage**, loose the **RA** nut and screw **VRA** as to get the desired air flow rate: moving the rod **TR** towards the air damper shaft, the air damper opens and consequently the air flow rate increases, moving it far from the shaft the air damper closes and the air flow rate decreases.

**Note:** once the procedure is perfomed, be sure that the blocking nut **RA** is fasten. Do not change the position of the air damper rods.

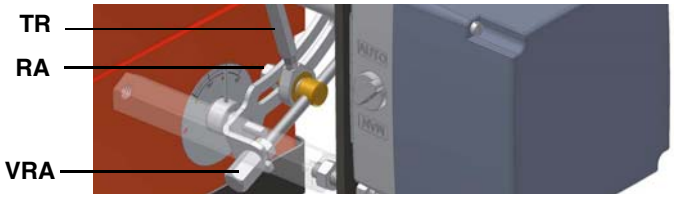


10 Only if necessary, change the combusiton head position: to let the burner operate at a lower output, loose the **VB** screw and move progressively back the combustion head towards the MIN position, by turning clockwise the **VRT** ring nut. Fasten **VB** screw when the adjustment is accomplished.

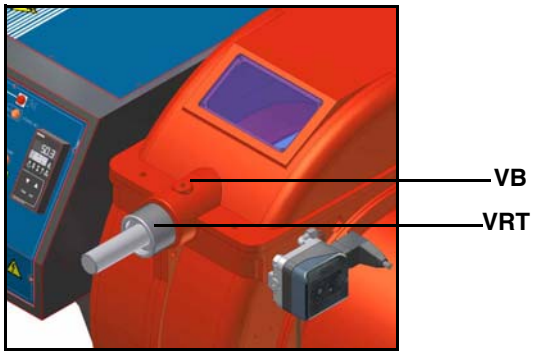


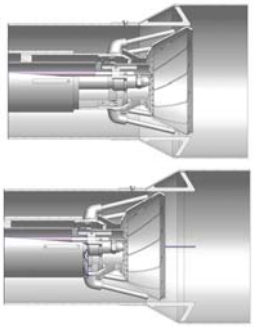

"MAX" head position

"MIN" head position

**Attention!** if it is necessary to change the head position, repeat the air and gas adjustments described above.

11 the air and gas rate are now adjusted at the maximum output, go on with the point to point adjustment on the **SV1** adjusting cam as to reach the minimum output point: gradually move the adjusting cam in order to adjust each of the **V1** screws as to set the cam foil shape as described on the next steps:

12 to change the **SV1** position set the actuator on the manual mode (MAN), turn the adjusting cam **SV1** and set again the actuator to the AUTO mode to lock the adjusting cam;

13 act on the **V1** screw that mathces the bearings referring to the adjusting cam position;

14 to adjust the next screw, set again the actuator mode to MAN, turn the adjusting cam and set the actuator to AUTO mode to lock the adjusting cam on the next screw; adjust it and go on this way to adjust all the screws in order to set the cam foil shape, according to the combustion values read.

15 Once the cam foil shape is defined, reconnect the **TAB** thermostat reconnecting the wire to the terminal no.6 or setting the RWF40 burner modulator to AUTO or the CMF switch to 3 (only for fully-modulating burner).

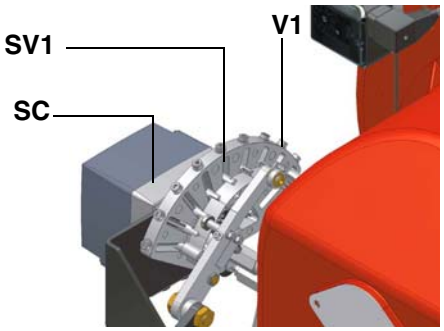


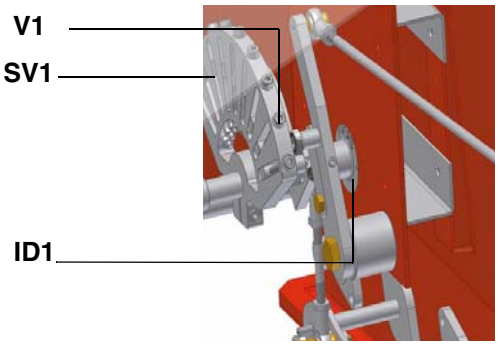


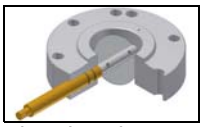

Gas throttle valve open

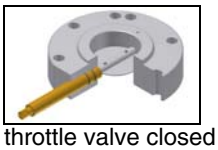

Gas throttle valve closed

16 Turn the burner off, then start it up again.

17 Once the pre-purge time comes to end, drive the burner to the high flame stage by the **TAB** thermostat and check the combustion values;

18 drive the burner to low flame, if necessary adjust the low flame size (ouput) by inserting a screwdriver on the slot **F** to move the

**BF1** cam.

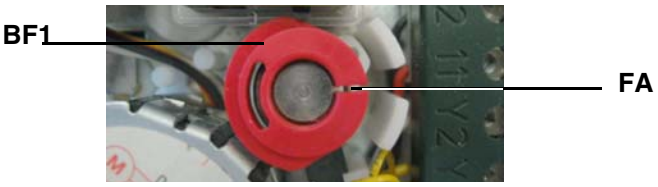


19 The low flame position must never match the ignition position that is why cam **BF1** must be set 20°- 30° more than the ignition position (see **ID1** index on previous pictures).

Now adjust the pressure switches (see next paragraph).

### *Calibration of air and gas pressure switches*

The **air pressure switch** locks the control box if the air pressure is not the one requested. If it happens, unlock the burner by means of the control box unlock pushbutton, placed on the burner control panel.

The **gas pressure switches** check the pressure to avoid the burner operate when the pressure value is not in the requested pressure range.

### *Calibration of air pressure switch*

To calibrate the air pressure switch, proceed as follows:

- Remove the transparent plastic cap.
- Once air and fuel setting have been accomplished, startup the burner.
- During the pre-purge phase o the operation, turn slowly the adjusting ring nut **VR** in the clockwise direction (to increase the adjusting pressure) until the burner lockout, then read the value on the pressure switch scale and set it to a value reduced by 15%.
- Repeat the ignition cycle of the burner and check it runs properly.
- Refit the transparent plastic cover on the pressure switch.

### *Calibration of low gas pressure switch*

As for the gas pressure switch calibration, proceed as follows:

- Be sure that the filter is clean.
- Remove the transparent plastic cap.
- While the burner is operating at the maximum output, test the gas pressure on the pressure port of the minimum gas pressure switch.
- Slowly close the manual cutoff valve (placed upstream the pressure switch, see gas train installation diagram), until the detected pressure is reduced by 50%. Pay attention that the CO value in the flue gas does not increase: if the CO values are higher than the limits laid down by law, slowly open the cutoff valve as to get values lower than these limits.
- Check that the burner is operating correctly.
- Clockwise turn the pressure switch adjusting ring nut (as to increase the pressure value) until the burner stops.
- Slowly fully open the manual cutoff valve.
- Refit the transparent plastic cover on the pressure switch.

### *Adjusting the high gas pressure switch (when provided)*

To calibrate the high pressure switch, proceed as follows according to its mounting position:

1 remove the pressure switch plastic cover;

2 if the maximum pressure switch is mounted upstreaam the gas valves: measure the gas pressure in the network, when flame is off; by means of the adjusting ring nut **VR**, set the value read, increased by the 30%.

3 if the maximum pressure switch is mounted downstream the “gas governor-gas valves” group and upstream the butterfly valve: light the burner, adjust it according to the procedure in the previous paragrph. Then, measure the gas pressure at the operating flow rate, downstream the “gas governor-gas valves” group and upstream the butterfly valve; by means of the adjusting ring nut **VR**, set the value read on step 2, increased by the 30%;

4 replace the plastic cover.

### *Fully modulating burners*

To adjust the fully-modulating burners, use the **CMF** switch on the burner control panel (see next picture), instead of the **TAB** thermostat as described on the previous paragraphs about the progressive burners. Go on adjusting the burner as described before, paying attention to use the CMF switch intead of **TAB**.

The **CMF** position sets the oprating stages: to drive the burner to the high-flame stage, set CMF=1; to drive it to the low-flame stage, set CMF=2.

To move the adjusting cam set CMF=1 or 2 and then CMF=0.

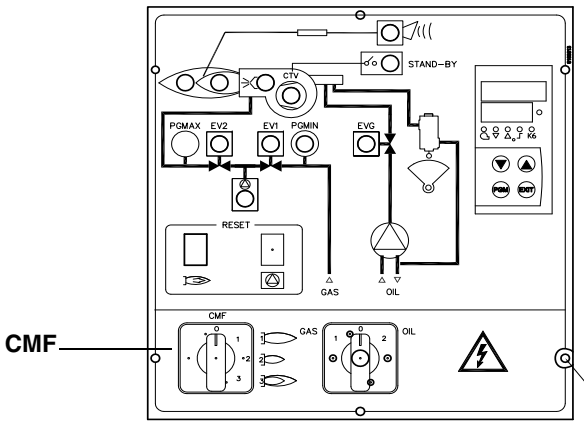


CMF = 0 stop at the current position
CMF = 1 high flame operation
CMF = 2 low flame operation
CMF = 3 automatic operation

### *Adjusting light oil flow rate*

The light oil flow rate can be adjusted choosing a by-pass nozzle that suits the boiler/utilisation output and setting the delivery and return pressure values according to the ones quoted on the chart below and the diagram on Fig. 21-Fig. 22 (as far as reading the pressure values, see next paragraphs).

| NOZZLE | DELIVERY PRESSURE bar | RETURN PRESSURE MAX. bar | RETURN PRESSURE MIN. bar |
|---|---|---|---|
| BERGONZO A3 | 20 | 11 - 13 | 6 (recommended) |
| FLUIDICS WR2 | 25 | 19 - 20 | 7 (recommended) |

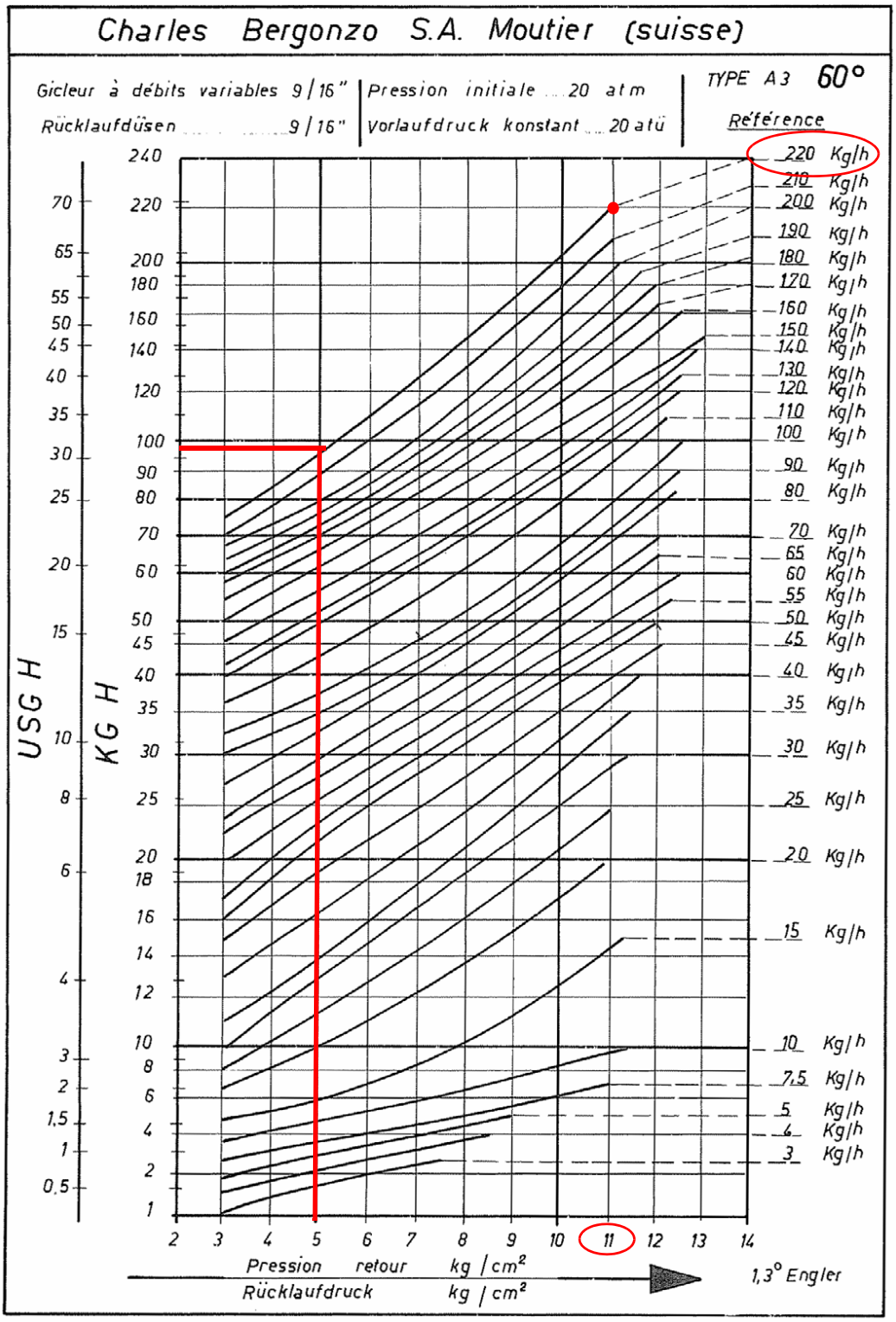


Fig. 21

N.B. Specific gravity of the light oil: 0.840kg/dm³

**Example (Bergonzo):** if a 220kg/h flow rate BERGONZO nozzle is provided, set the return pressure at 11bar, supply at 20bar on the delivery to get a 220kg/h flow rate. If the return pressure needed is 5bar, instead, act on the **V** adjusting screw on the pressure governor (see chapter on page 32). The flow rate will then be about 95kg/h (see the example showed on the Bergonzo diagram-Fig. 21).

Tab. 1

| | FLOW RATE kg/h | |
|---|---|---|
| **DIMENSIONS** | **Min** | **Max** |
| 40 | 13 | 40 |
| 50 | 16 | 50 |
| 60 | 20 | 60 |
| 70 | 23 | 70 |
| 80 | 26 | 80 |
| 90 | 30 | 90 |
| 100 | 33 | 100 |
| 115 | 38 | 115 |
| 130 | 43 | 130 |
| 145 | 48 | 145 |
| 160 | 53 | 160 |
| 180 | 59 | 180 |
| 200 | 66 | 200 |
| 225 | 74 | 225 |
| 250 | 82 | 250 |
| 275 | 91 | 275 |
| 300 | 99 | 300 |
| 330 | 109 | 330 |
| 360 | 119 | 360 |
| 400 | 132 | 400 |
| 450 | 148 | 450 |
| 500 | 165 | 500 |
| 550 | 181 | 550 |
| 600 | 198 | 600 |
| 650 | 214 | 650 |
| 700 | 231 | 700 |
| 750 | 250 | 750 |
| 800 | 267 | 800 |

Fig. 22

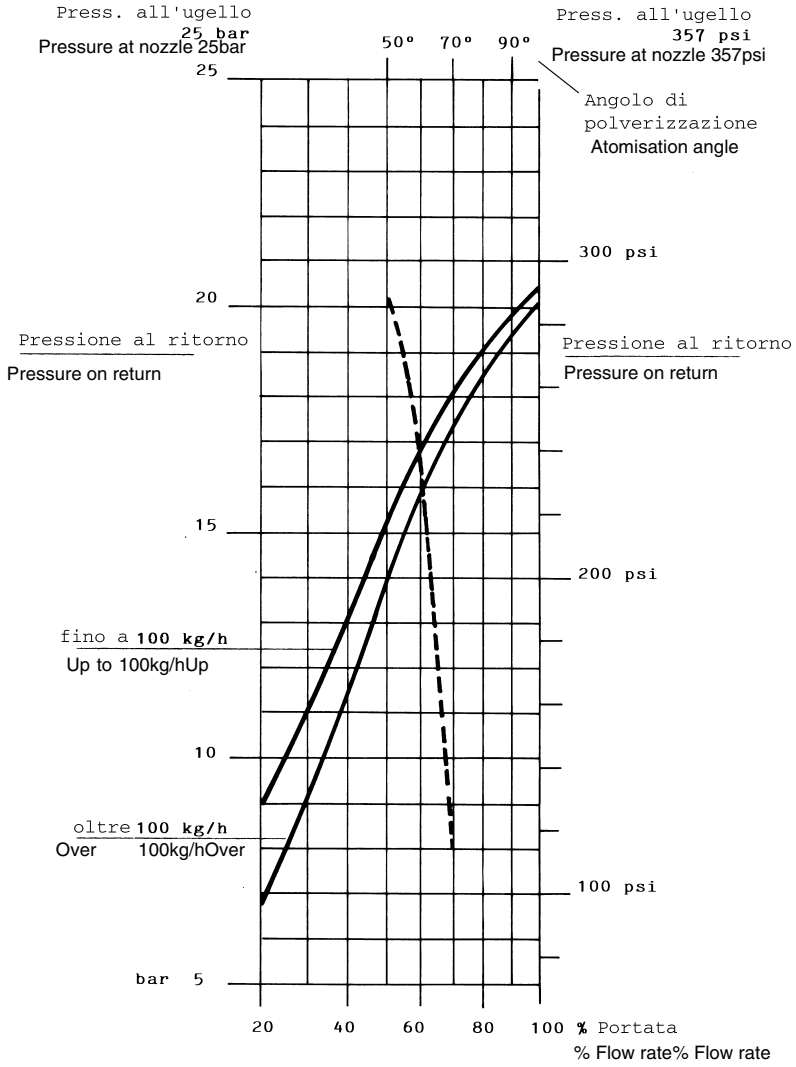


----------Atomisation angle according to the return pressure
_____ % Flow rate

**Example (Fluidics):** as for over 100kg/h nozzles, the 80% of the nozzle flow rate can be obtained with a return pressure at about 18bar (see Fig. 22).

## *Oil Flow Rate Settings by means of Berger STM30.. / Siemens SQM40.. actuator*

1 Once the air and gas flow rates are adjusted, turn the burner off, switch it on again by turning the **CM** switch to the oil operation (OIL, on the burner control panel (see page 39).

2 with the electrical panel open, prime the oil pump acting directly on the related **CP** contactor (see next picture): check the pump motor rotation and keep pressing for some seconds until the oil circuit is charged;

3 bleed the air from the **M** pressure gauge port (Fig. 23) by loosing the cap without removing it, then release the contactor.

| Suntec TA.. | Danfoss KSM.. | Suntec T.. |
|---|---|---|
| 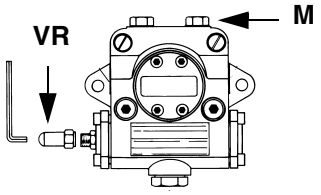 | 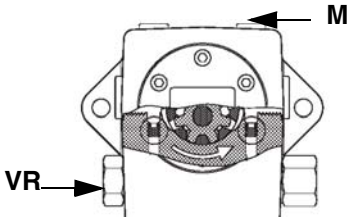 | 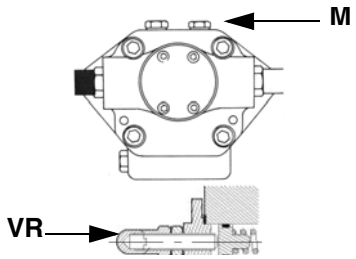 |







Fig. 23

4 Before starting the burner up, drive the high flame actuator microswitch matching the low flame one (in order to let the burner operates at the lowest output) to achieve safely the high flame stage .

5 record the high flame value set during the gas operation adjustments (see previous paragraphs);

6 start the burner up by means of the thermostat series and wait until the pre-purge time comes to an end and that the bruner starts up;

7 drive the burner to high flame stage, by means fo the thermostat **TAB** (high/low flame thermostat - see Wiring diagrams), as far as fully-modulating burners, see related paragraph.

8 Then move progressively the microswitch to higher values until it reaches the high flame position; always check the combustion values and eventually adjusting the oil pressure (see next step).Then move progressively the microswitch to higher values until it reaches the high flame position; always check the combustion values and eventually adjusting the oil pressure (see next step).

Berger STM30

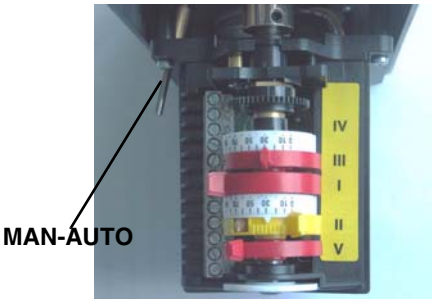


Siemens SQM40

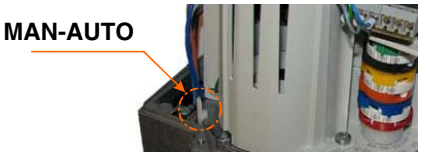


**Actuator cams**

| | |
|---|---|
| I | High flame |
| II | Stand-by and Ignition |
| III | Low flame - gas |
| IV | Low flame - oil (SQM40..) |
| V | Low flame - oil (STM30..) |

9 the nozzle suplly pressureis already factory-set and must not be changed. Only if necessary, adjust the supply pressure as follows (see related paragraph);insert a pressure gauge into the port shown on Fig. 24 and act on on the pump adjusting screw **VR** (see Fig. 23and page 21) as to get the nozzle pressure at 20 bar or 25bar (according to the nozzle model provided: Bergonzo or Flui-

dics nozzles - see page 45-30).

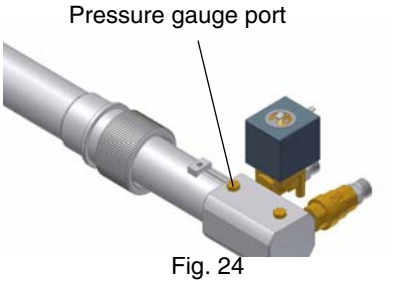


Fig. 24

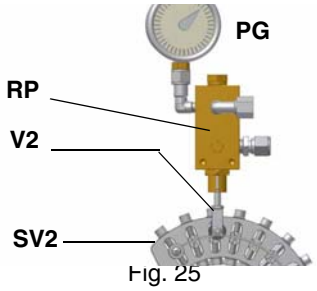


Fig. 25

10 in order to get the maximum oil flow rate, adjust the pressure (reading its value on the **PG** pressure gauge) without changing the air flow rate set during the gas operation adjustments (see previous paragraph): checking always the combustion parameters, the adjustment is to be performed by means of the **SV2** adjusting cam screw (see picture) when the cam has reached the high flame position.

11 as for the point-to-point regulation in order to set the cam foil shape, move the oil low flame microswitch (cam V) a little lower than the maximum position (90°);

12 set the **TAB** thermostat to the minimum (as far as fully-modulating burners, see related paragraph) in order that the actuator moves progressively towards the low flame position;

13 move "low flame" cam IV(SQM40..) / V (STM30..) towards the minimum to move the actuator towards the low flame until the two bearings find the adjusting screw that refers to a lower position: screw **V2** to increase the rate, unscrew to decrease, in order to get the pressure as showed on chart/diagram on "Adjusting light oil flow rate" on page 32, according to the requested rate.

14 Move again cam IV / V towards the minimum to meet the next screw on the adjusting cam and repeat the previous step; go on this way as to reach the desired low flame point.

15 The low flame position must never match the ignition position that is why cam I**V / V** must be set 20°- 30° more than the ignition position.

Turn the burner off; then start it up again. If the adjustment is not correct, repeat the previous steps.

### *Adjustment by the Siemens SQL33.. actuator*

1 Once the air and gas flow rates are adjusted, turn the burner off, switch the **CM** switch to the heavy oil operation (OIL, on the burner control panel (see page 39).

2 with the electrical panel open, prime the oil pump acting directly on the related **CP** contactor (see next picture): check the pump motor rotation and keep pressing for some seconds until the oil circuit is charged;

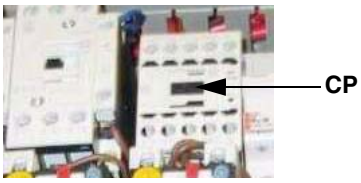


3 bleed the air from the **M** pressure gauge port (Fig. 23) by loosing the cap without removing it, then release the contactor.

4 record the high flame value set during the gas operation adjustments (see prevoius paragraphs);

5 Start the burner up by means of the thermostat series and wait unitl the pre-purge phase comes to end and that burner starts up;

6 the burner starts up with the actuator on the ignition position, set it to the **MAN** (manual mode), by the **MAN/AUTO** selector (ignition position= read on the air damper index **ID1** - see picture on pag.34);

7 disconnect the **TAB** thermostat removing the wire from the terminal no. 6 or by setting MAN on the RWF40 modulatore or by setting 0 by means of the **CMF** switch (only for fully-modulating burners);

8 manually drive the adjusting cam **SV2** to the high flame position and set the actuator to the AUTO mode (by the related switch - see picture) to lock the adjusting cam.

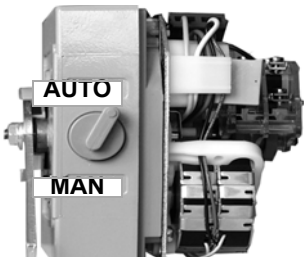


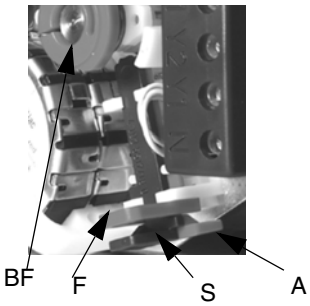


**SQL33.. actuator cams**

A = (red) cam locking lever for "high flame"
S = (green) cam locking lever for "stand-by and ignition"
F = plastic cam
BF1 = Low flame (gas)
BF2 = Low flame (oil)

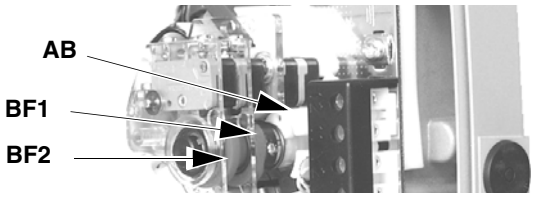

The nozzle supply pressureis already factory-set and must not be changed. Only if necessary, adjust the supply pressure as follows (see related paragraph);insert a pressure gauge into the port shown on Fig. 25 and act on on the pump adjusting screw **VR** (see Fig. 23 and page 21) as to get the nozzle pressure at 20 bar or 25bar (according to the nozzle model provided: Bergonzo or Fluidics nozzles - see page 32-33).

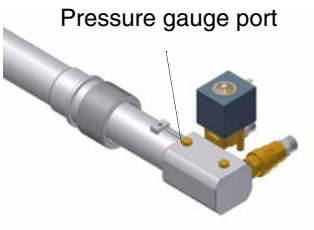


Fig. 26

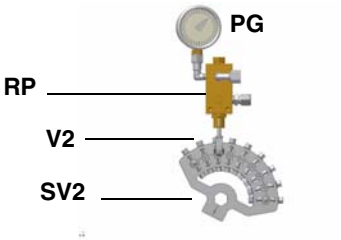


Fig. 27

9 in order to get the maximum oil flow rate, adjust the pressure (reading its value on the **PG** pressure gauge) without changing the air flow rate set during the gas operation adjustments (see prevoius paragraph): checking always the combustion parameters, the adjustment is to be performed by means of the **SV2** adjusting cam screw (see picture) when the cam has reached the high flame position.

10 once the air and oil flow rate have been adjusted at the maximum output, go on with the point to point adjustment on the **SV2** adjusting cam as to reach the minimum output point: gradually move the adjusting cam in order to adjust each of the **V2** screws as to describe the cam foil shape.

11 to change the **SV2** position set the actuator on the manual mode (MAN), turn the adjusting cam **SV2** and set again the actuator to the AUTO mode to lock the adjusting cam;

12 act on the **V2** screw that mathces the bearings referring to the adjusting cam position;

13 to adjust the next screw, set again the actuator mode to MAN, turn the adjusting cam and set the actuator to AUTO mode to lock the adjusting cam on the next screw; adjust it and go on this way to adjust all the screws in order to set the cam foil shape, according to the combustion values read.

14 Once the cam foil shape is defined, reconnect the **TAB** thermostat reconnecting the wire to the terminal no.6 or setting the RWF40 burner modulator to AUTO or the CMF switch to 3 (only for fully-modulating burner).

15 Turn the burner off then start it up again.

16 Once the pre-purge time comes to end, drive the burner to the high flame stage by the **TAB** thermostat: check the combustion values;

17 drive the burner to low flame, if necessary adjust the low flame size (output) by inserting a screwdriver on the slot **F** to move the **BF2** cam.

18 The low flame position must never match the ignition position that is why cam **BF2** must be set 20°- 30° more than the ignition position.

19 Turn the burner off; then start it up again. If the adjustment is not correct, repeat the previous steps.Replace the burner cover

### *Oil circuit*

The fuel is pushed into the pump 1 to the nozzle 3 at the delivery pressure set by the pressure governor. The solenoid valve 2 stops the fuel immission into the combustion chamber. The fuel flow rate that is not burnt goes back to the tank through the return circuit. The spill-back nozzle is feeded at constant pressure, while the return line pressure is adjusted by means of the pressure governor controlled by an actuator coupled to an adjusting cam. The fuel amount to be burnt is adjusted by means of the burner actuator according to the adjustments set (see prevoius paragraph).

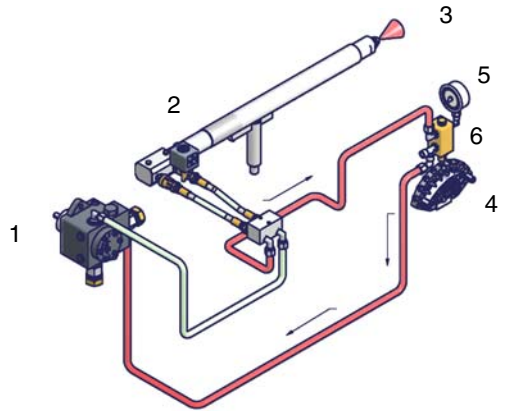


Fig. 28 - Stand-by

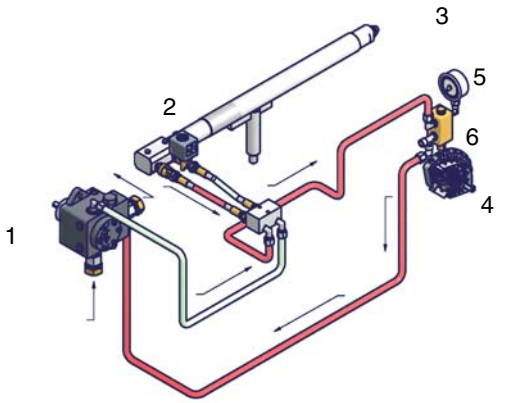


Fig. 29 - Prepurge

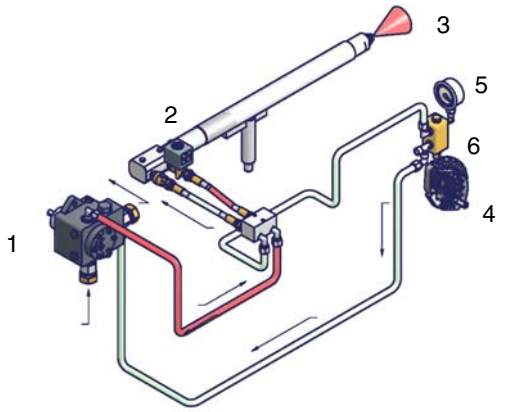


Fig. 30 - Low flame

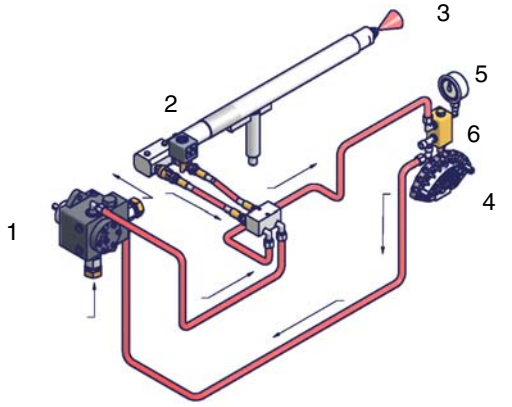


Fig. 31 - High flame

**Key**

1 Light oil pump
2 Light oil solenoid valve
3 Nozzle
4 Adjusting cam
5 Pressure gauge
6 Pressure governor

# PART II: OPERATION

## LIMITATIONS OF USE

**THE BURNER IS AN APPLIANCE DESIGNED AND CONSTRUCTED TO OPERATE ONLY AFTER BEING CORRECTLY CONNECTED TO A HEAT GENERATOR (E.G. BOILER, HOT AIR GENERATOR, FURNACE, ETC.), ANY OTHER USE IS TO BE CONSIDERED IMPROPER AND THEREFORE DANGEROUS.**

**THE USER MUST GUARANTEE THE CORRECT FITTING OF THE APPLIANCE, ENTRUSTING THE INSTALLATION OF IT TO QUALIFIED PERSONNEL AND HAVING THE FIRST COMMISSIONING OF IT CARRIED OUT BY A SERVICE CENTRE AUTHORISED BY THE COMPANY MANUFACTURING THE BURNER.**

**A FUNDAMENTAL FACTOR IN THIS RESPECT IS THE ELECTRICAL CONNECTION TO THE GENERATOR'S CONTROL AND SAFETY UNITS (CONTROL THERMOSTAT, SAFETY, ETC.) WHICH GUARANTEES CORRECT AND SAFE FUNCTIONING OF THE BURNER.**

**THEREFORE, ANY OPERATION OF THE APPLIANCE MUST BE PREVENTED WHICH DEPARTS FROM THE INSTALLATION OPERATIONS OR WHICH HAPPENS AFTER TOTAL OR PARTIAL TAMPERING WITH THESE (E.G. DISCONNECTION, EVEN PARTIAL, OF THE ELECTRICAL LEADS, OPENING THE GENERATOR DOOR, DISMANTLING OF PART OF THE BURNER).**

**NEVER OPEN OR DISMANTLE ANY COMPONENT OF THE MACHINE.**

**OPERATE ONLY THE MAIN SWITCH, WHICH THROUGH ITS EASY ACCESSIBILITY AND RAPIDITY OF OPERATION ALSO FUNCTIONS AS AN EMERGENCY SWITCH, AND ON THE RESET BUTTON.**

**IN CASE OF A BURNER SHUT-DOWN, RESET THE CONTROL BOX BY MEANS OF THE RESET PUSHBUTTON. IF A SECOND SHUT-DOWN TAKES PLACE, CALL THE TECHNICAL SERVICE, WITHOUT TRYING TO RESET FURTHER.**

**WARNING: DURING NORMAL OPERATION THE PARTS OF THE BURNER NEAREST TO THE GENERATOR (COUPLING FLANGE) CAN BECOME VERY HOT, AVOID TOUCHING THEM SO AS NOT TO GET BURNT.**

## OPERATION

| | |
|---|---|
| ⚠ | ***ATTENTION:*** **before starting the burner up, be sure that the manual cutoff valves are open and check that the pressure upstream the gas train complies the value quoted on paragraph "Technical specifications". Read carefully the "WARNINGS" chapter in this manual.** |

- Choose the typer of fuel by turning the **A** switch, on the burner control panel.
  **CAUTION:** if the fuel chosen is light oil, be sure the cutoff valves on the feed and return pipes are open.
- Check the control box is not locked (signalling light **O**, on); if so, reset it by means of the pushbutton **C**.
- Check the series of thermostats and pressure switches turn the burner to on.

### *Gas operation*

- Check the gas feeding pressure is sufficient (signalling lamp **G** on).

**Burners provided with gas proving system:** the gas proving system test begins; when the test is performed the proving system LED turns on. At the end of the test, the burner staring cycle begins: in case of leakage in a valve, the gas proving system stops the burner and the lamp **E** turns on. Reset it, by means of the reset pushbutton on the device, in burners with VPS504 (pushbutton **LB** in picture), or by the **D** pushbutton on the burner panel if this one is fitted with LDU11 proving system.

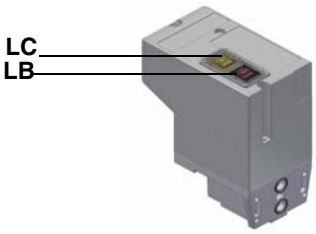


**VPS504**

**NOTE:** if the burner is fitted with Dungs VPS504, the pre-purgue phase starts once the gas proving system is successfully performed.

Since the pre-purgue phase must be carried out with the maximum air rate, the control box drives the actuator opening and when the maximum opening position is achieved, the pre-purge time counting starts.

- At the end of the pre-purge time, the actuator drives the complete closing (ignition with gas position) and, as this is achieved the ignition transformer is energised (LED **L** is on).
- Few seconds after the gas valves opening, the transformer is de-energised and lamp **L** turns off.
- The burner is now operating, meanwhile the actuator goes to the high flame position and, after some seconds, the two-stage operation begins; the burner is driven automatically to high flame or low flame, according to the plant requirements.

Operation in high or low flame is signalled by lamp **N** on the frontal panel.

### *Light oil operation*

- The fan motor starts and the pre-purge phase as well. Since the pre-purge phase must be carried out at the maximum air rate, the control box drives the actuator opening and when the maximum opening position is reached, the pre-purge time counting starts.
- At the end of the pre-purge time, the actuator is in the light oil ignition position: the ignition transformer is energised (lamp **L** on). Few seconds after the light oil valves opening, the transformer is de-energised and lamp **L** turns off.
- The burner is now operating, meanwhile the actuator goes to the high flame position; after some seconds, the two-stage operation begins; the burner is driven automatically to high flame or low flame, according to the plant requirements.

Operation in high or low flame is signalled by LED **N** on the burner control panel.

**Modulating burners:** they are provided with the Siemens RWF40 output controller (**Q**-see next picture). As for the controller operation see the related manual.

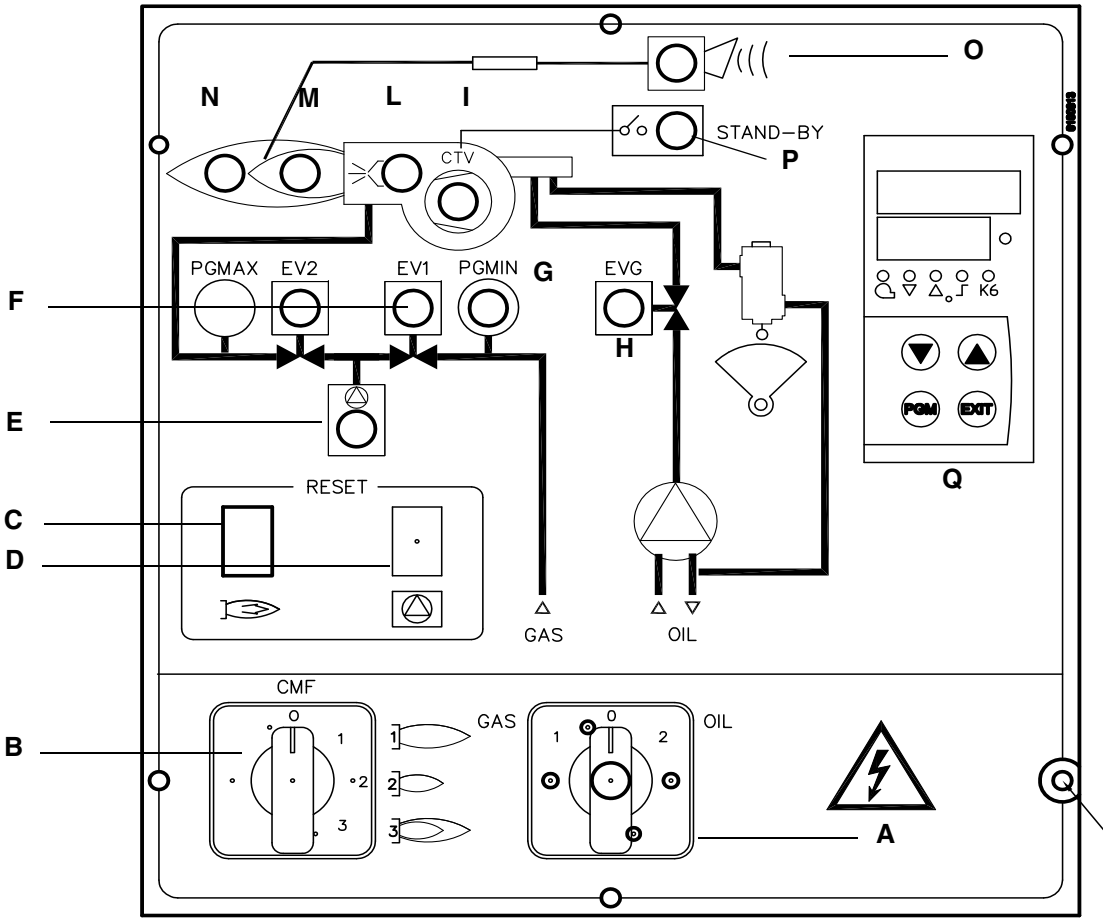


Fig. 32 - Burner control panel

**Keys**

A Main switch and fuel selector CM (0=Off, 1=GAS, 2=OIL)
B CMF switch (0=stop, 1=low flame, 2=high flame, 3=automatic) - fully modulating burners only
C Control box reset pushbutton
D Gas proving system reset pushbutton (only for burners with Siemens LDU11 provided)
E Gas proving system lockout signalling lamp
F Gas valves EV1/EV2 operation signalling lamp
G Gas pressure switch signal lamp
H Oil valve EVG operation signalling lamp
I Thermal cutout intervention signalling light CTV
L Ignition transformer operation signalling lamp
M Low flame operation signalling lamp
N High flame operation signalling lamp
O Burner lockout signalling lamp
P Stand-by signalling lamp
Q Siemens RWF40 output controller (fully modulating burners only)

# PART III: MAINTENANCE

At least once a year carry out the maintenance operations listed below. In the case of seasonal servicing, it is recommended to carry out the maintenance at the end of each heating season; in the case of continuous operation the maintenance is carried out every 6 months.

| | |
|---|---|
| ⚠ | **WARNING: ALL OPERATIONS ON THE BURNER MUST BE CARRIED OUT WITH THE MAINS DISCONNECTED AND THE FUEL MANAUL CUTOFF VALVES CLOSED!** |
| | **ATTENTION: READ CAREFULLY THE "WARNINGS" CHAPTER AT THE BEGINNIG OF THIS MANUAL..** |

## ROUTINE MAINTENANCE

- Check and clean the gas filter cartridge, if necessary replace it (see next paragraghs);
- Check and clean the fuel filter cartdrige, replace if necessary.
- Check and clean the filter inside the light oil pump: filter must be thoroughly cleaned at least once in a season to ensure correct working of the fuel unit. To remove the filter, unscrew the four screws on the cover. When reassemble, make sure that the filter is mounted with the feet toward the pump body. If the gasket between cover and pump housing should be damaged, it must be replaced. An external filter should always be installed in the suction line upstream of the fuel unit.
- Check the fuel hoses for possible leaks.
- Remove, check and clean the combustion head (see page 42);
- Check ignition electrodes, clean, adjust and, if necessary, replace them (see page 43);
- Check and carefully clean the **UV** detector, replace it if necessary; if in doubt, check the detection current, once the burner starts up (see page 43).
- Remove and clean the fuel nozzle ⚠ ***(Important:* cleaning must be performed using solvent, not metal tools!*).*** At the end of maintenance operations after the burner reassembly, light the flame and check its shape, replacing the nozzle whenever a questionable flame shape appears. Whenever the burner is used intensely, we recommend preventively replacing the nozzle at the start of each heating season.
- Clean and grease sliding and rotating parts.

| | |
|---|---|
| ⚠ | **ATTENTION:** when servicing, if it was necessary to disassemble the gas train parts, remember to execute the gas proving test, once the gas train is reassembled, according to the procedure imposed by the law in force. |

### *Light oil filter maintenance*

For correct and proper servicing, proceed as follows:

1 cutoff the required pipe section;
2 unscrew the filter cup;
3 remove the filtering cartridge, wash it with gasoline; if necessary, replace it; check the tightening O-rings and replace them if necessary;
4 replace the cup and restore the pipe line.

### *Gas filter maintenance*

| | |
|---|---|
| ⚠ | **ATTENTION:** Before opening the filter, close the manual cutoff valve downstream the filter and bleed the gas; check that inside the filter there is no pressurised gas. |

To clean or remove the filter, proceed as follows:

1 remove the cap unscrewing the fixing screws (A);
2 remove the filtering cartridge (B), clean it using water and soap, blow it with compressed air(or replace it, if necessary)
3 replace the cartridge in its proper position taking care to place it inbetween the guides as not to hamper the cap replacement;
4 be sure to replace the "O" ring into its place (C) and replace the cover fastening by the proper screws (A).

A

B

C

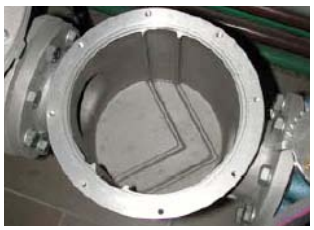

### *Inspection and replacement of the MULTIBLOC DUNGS MBC..SE filter (Threaded valves group)*

Inspect the filter at least once a year.

- Change the filter, if pressure value between pressure connections 1 and 2 is greather than 10 mbar.
- Change the filter, if pressure value between pressure connections 1 and 2 is twice as high compared to the last inspection.

1. Interrupt gas supply: close ball valve
2. Remove screws 1-2
3. Replace the filter insert 3
4. Screw in screws 1-2 without use force to fasten.
5. Perform leakage and funcion test.
6. Pay attention that dirt does not fall inside the valve.

Space requirements for fitting filter, A: from 150 to 230 mm.

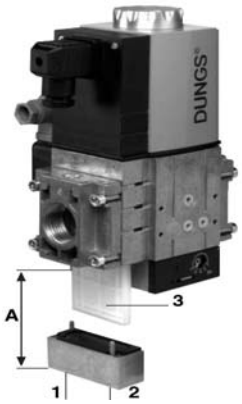


Fig.33

### *Removing the combustion head*

1 Remove the top **H**.

2 Remove the **UV** detector out of its housing: disconnect electrode cables and the light oil flexible hoses.

3 Loosen the screws **V** holding the gas manifold **G**, loosen the two connectors **E** and remove the assembly as shown.

4 Clean the combustion head by means of a vacuum cleaner; scrape off the scale by means of a metallic brush.

**Note:** to replace the combustion head, reverse the operations described above.

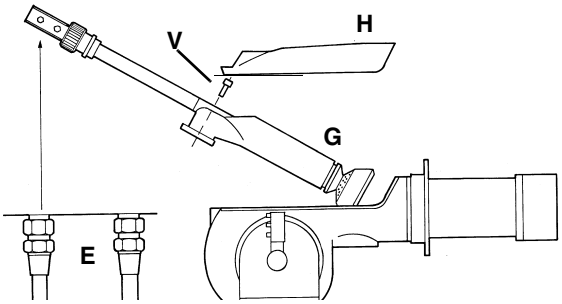


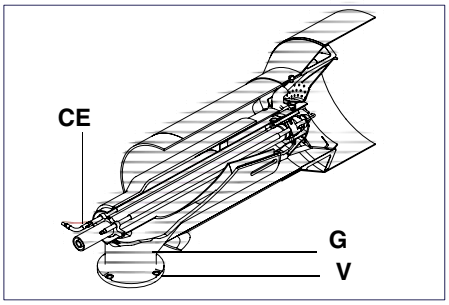


### *Removing the oil gun, replacing the nozzle and the electrodes*

| | |
|---|---|
| ⚠ | **ATTENTION:** avoid the electrodes to get in touch with metallic parts (blast tube, head, etc.), otherwise the boiler operation would be compromised. Check the electrodes position after any intervention on the combustion head. |

To remove the oil gun, proceed as follows:

1 remove the combustion head as described on the prevoius paragraph;

2 loosen the **VL** screw and remove the oil gun and the electrodes: check the oil gun, replace it if necessary;

3 after removing the oil gun, unscrew the nozzle and replace it if necessary;

4 in order to replace the electrodes, unscrew the **VE** fixing screws and remove them: place the new electrodes being careful to observe the measures showed on pag.: reassemlbe following the reversed procedure.

**Caution**: adjust the nozzle position according to the air pipe, by means of the **VU** screw, ance the **VL** screw is fastened.

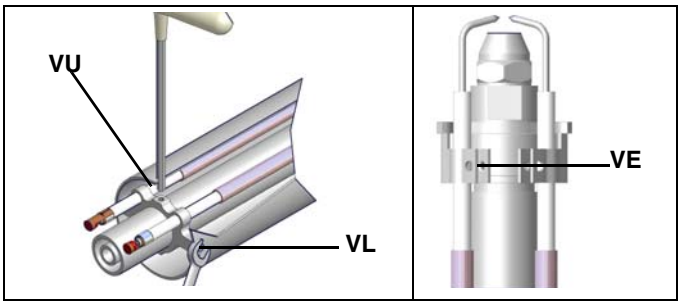

### *Adjusting the electrodes position*

Adjust the electrodes position, according to the quotes shown on the next picture.

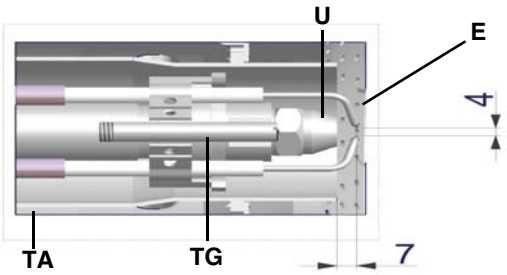


**Keys**

| | |
|---|---|
| **E** | electrodes |
| **TA** | air pipe |
| **TG** | ignition gas pipe |
| **U** | nozzle |

Fig. 34

### *Cleaning and replacing the detection probe*

The photocell working life is about 10000 working hours (about 1 year), at max 50°C after which it must be replaced.

To clean/replace the detection photocell, proceed as follows:

1 Disconnect the system from the electrical power supply.
2 Shut off the fuel supply;
3 remove the photocell from its slot (see next picture);
4 clean the bulbe if dirty, taking care not to touch it with bare hands;
5 if necessary, replace the bulb;
6 replace the photocell into its slot.

### *Checking the detection current*

To check the detection current follow the diagram on Fig. 35. If the signal is less than the value indicated, check the position of the detection electrode or detector, the electrical contacts and, if necessary, replace the electrode or the detector.

| Control box | Minimum detection signal |
|---|---|
| Siemens LFL1.3.. | 70µA (with UV detector) |

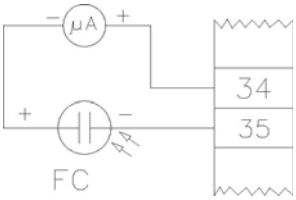


TERMINAL BOARD MC

Fig. 35

### *Seasonal stop*

To stop the burner in the seasonal stop, proceed as follows:

1 turn the burner main switch to 0 (Off position)
2 disconnect the power mains
3 close the fuel valve of the supply line

### *Burner disposal*

In case of disposal, follow the instructions according to the laws in force in your country about the “Disposal of materials”.

## BURNER EXPLODED VIEW

| ITEM | DESCRIPTION |
|---|---|
| 1 | AIR INLET CONE |
| 2 | BURNER HOUSING |
| 2.1 | COVER |
| 3 | GENERATOR GASKET |
| 4 | AIR PRESSURE SWITCH PIPE |
| 5 | FLEXIBLE HOSE |
| 6 | FLEXIBLE HOSE |
| 7 | INSPECTION GLASS |
| 8 | PLATE |
| 9 | BUTTERFLY GAS VALVE |
| 10 | PHOTOCELL |
| 11 | STANDARD BLAST TUBE |
| 12 | AIR PRESSURE SWITCH |
| 13.1 | AIR INTAKE |
| 13.2 | LOUVER SHAFT |
| 13.3 | LOUVER SHAFT |
| 13.4 | AIR INTAKE DAMPER |
| 13.5 | AIR INTAKE DAMPER |
| 13.6 | PIN |
| 13.7 | NET |
| 13.8 | ADJUSTING CAM SHAFT |
| 13.9 | ADJUSTING CAM |
| 13.9.1 | ADJUSTING CAM FOIL |
| 13.10.1 | LEVERAGE |
| 13.10.2 | BRACKET |
| 13.10.3 | ADJUSTING CAM |
| 13.10.3.1 | ADJUSTING CAM FOIL |
| 13.10.4 | ACTUATOR |

| ITEM | DESCRIPTION |
|---|---|
| 13.10.5 | ACTUATOR SHAFT |
| 14.1 | BRACKET |
| 14.2 | BRACKET |
| 14.3 | MOTOR |
| 14.4 | COUPLING |
| 14.5 | PUMP |
| 15.1.1 | GAS VALVE HOUSING |
| 15.1.2 | "SKP" ACTUATOR |
| 15.1.3 | "SKP" ACTUATOR |
| 15.1.4 | GAS PROVING SYSTEM |
| 15.1.5 | GAS PRESSURE |
| 15.2 | FLANGED PIPE |
| 15.3 | THREADED PIPE |
| 15.4 | GAS FILTER |
| 16.1 | FAIRLEAD |
| 16.2 | FAIRLEAD |
| 17.1 | PRESSURE GOVERNOR |
| 17.2 | PRESSURE GAUGE |
| 18.1 | OIL MANIFOLD |
| 19.1 | MOTOR MOUNTING FLANGE |
| 19.2 | MOTOR |
| 19.3 | FAN WHEEL |
| 20.1 | GAS MANIFOLD |
| 20.2 | O RING |
| 20.3 | O RING |
| 20.4 | PIN |
| 20.5 | RING NUT |
| 20.6 | ADJUSTING BUSH |

| ITEM | DESCRIPTION |
|---|---|
| 20.7 | STANDARD COMBUSTION HEAD |
| 20.8 | IGNITION ELECTRODE |
| 20.9 | IGNITION CABLE |
| 20.10 | STANDARD COMPLETE OIL GUN |
| 20.10.1.1 | OIL SOLENOID VALVE |
| 20.10.1.2 | ONE-WAY VALVE |
| 20.10.1.3 | OIL MANIFOLD |
| 20.10.2 | NOZZLE HOLDER |
| 20.11 | NOZZLE |
| 21.1 | BOARD |
| 21.2 | COVER |
| 21.3.1 | LIGHT |
| 21.3.2 | LIGHT |
| 21.3.3 | LOCK-OUT RESET BUTTON |
| 21.3.4 | PROTECTION |
| 21.3.5 | SWITCH |
| 22.1 | CONTROL BOX SOCKET |
| 22.2 | IGNITION TRANSFORMER |
| 22.3 | CONTROL BOX |
| 22.4 | PRINTED CIRCUIT BOARD |
| 20.7 | STANDARD COMBUSTION HEAD |
| 20.8 | IGNITION ELECTRODE |
| 20.9 | IGNITION CABLE |
| 20.10 | STANDARD COMPLETE OIL GUN |
| 20.10.1.1 | OIL SOLENOID VALVE |
| 20.10.1.2 | ONE-WAY VALVE |
| 20.10.1.3 | OIL MANIFOLD |
| 20.10.2 | NOZZLE HOLDER |

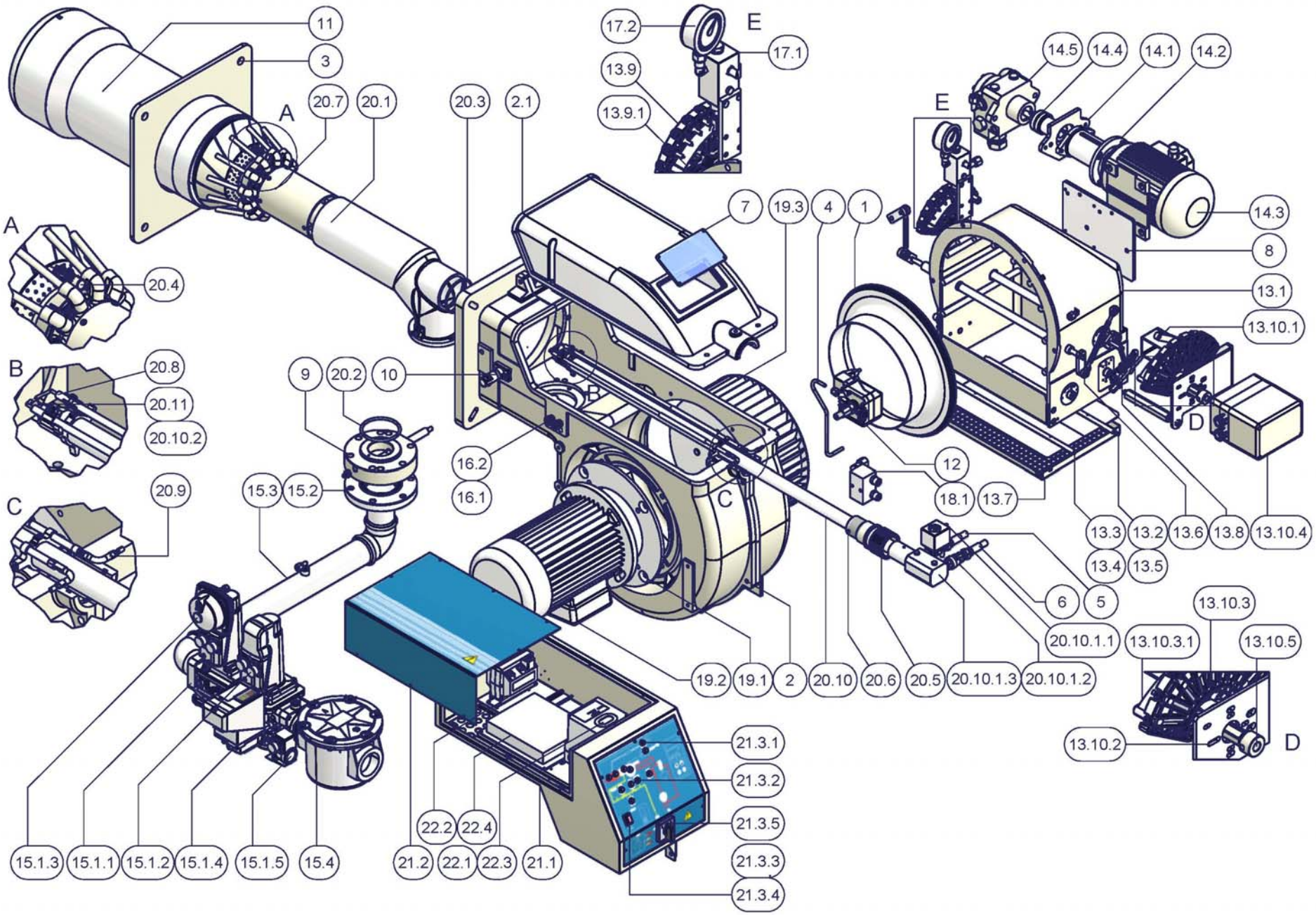
11
3
A
20.7
20.1
20.3
2.1
17.2
E
17.1
13.9
13.9.1
14.5
14.4
14.1
14.2
E
7
19.3
4
1
14.3
8
13.1
13.10.1
A
20.4
B
20.8
20.11
20.10.2
9
20.2
10
B
16.2
16.1
D
12
18.1
13.7
C
20.9
15.3
15.2
C
13.3
13.2
13.6
13.8
13.10.4
13.4
13.5
6
5
13.10.3
20.10.1.1
13.10.3.1
13.10.5
19.2
19.1
2
20.10
20.6
20.5
20.10.1.3
20.10.1.2
13.10.2
D
21.3.1
21.3.2
21.3.5
21.3.3
21.3.4
22.2
22.4
15.1.3
15.1.1
15.1.2
15.1.4
15.1.5
15.4
21.2
22.1
22.3
21.1

## SPARE PARTS

| Desription | Code | | |
|---|---|---|---|
| | **HP91A** | **HP92A** | **HP93A** |
| CONTROL BOX | 2020448 | 2020448 | 2020448 |
| IGNITION ELECTRODE | 2080292 | 2080292 | 2080292 |
| OIL FILTER | 2090018 | 2090018 | 2090018 |
| GAS FILTER - Rp 2 | 2090119 | 2090119 | 2090119 |
| GAS FILTER - DN65 | 2090117 | 2090117 | 2090117 |
| GAS FILTER - DN80 | 2090112 | 2090112 | 2090112 |
| GAS FILTER - DN100 | 2090113 | 2090113 | 2090113 |
| GASKET | 2110048 | 2110048 | 2110048 |
| FAN WHEEL | 2150009 | 2150028 | 2150010 |
| AIR PRESSURE SWITCH | 2160065 | 2160065 | 2160065 |
| GAS PRESSURE SWITCH- GW500 A6 | 2160087 | 2160087 | 2160087 |
| GAS PRESSURE SWITCH- GW150 A5 | 2160077 | 2160077 | 2160077 |
| GAS PRESSURE SWITCH- GW500 A5 | 2160089 | 2160089 | 2160089 |
| GAS PRESSURE SWITCH- GW50 A5 | 2160076 | 2160076 | 2160076 |
| IGNITION TRANSFORMER | 2170302 | 2170302 | 2170302 |
| PUMP MOTOR | 2180202 | 2180202 | 2180202 |
| FAN MOTOR | 2180276 | 2180277 | 2180206 |
| GAS VALVE GROUP - Rp2 - Siemens VGD20.. | 2190171 | 2190171 | 2190171 |
| GAS VALVE GROUP - DN65 - Siemens VGD40.. | 2190172 | 2190172 | 2190172 |
| GAS VALVE GROUP - DN80 - Siemens VGD40.. | 2190169 | 2190169 | 2190169 |
| GAS VALVE GROUP - DN100 - Siemens VGD40.. | 2190174 | 2190174 | 2190174 |
| GAS VALVE ACTUATOR SKP15 | 2190181 | 2190181 | 2190181 |
| GAS VALVE ACTUATOR SKP25 | 2190183 | 2190183 | 2190183 |
| GAS VALVE GROUP - Rp2 - Dungs MBC1200SE | 21903M5 | 21903M5 | 21903M5 |
| GAS VALVE GROUP - DN65 - Dungs MBC1900SE | 21903M6 | 21903M6 | 21903M6 |
| GAS VALVE GROUP - DN80 - Dungs MBC3100SE | 21903M7 | 21903M7 | 21903M7 |
| GAS VALVE GROUP - DN100 - Dungs MBC5000SE | 21903M8 | 21903M8 | 21903M8 |
| GAS PROVING SYSTEM | 2190403 | 2190403 | 2190403 |
| GAS PROVING SYSTEM | 2191604 | 2191604 | 2191604 |
| FLEXIBLE HOSE L=1500 | 2340004 | 2340004 | 2340004 |
| FLEXIBLE HOSE L=335 | 2340087 | 2340087 | 2340087 |
| FLEXIBLE HOSE L=385 | 2340088 | 2340088 | 2340088 |
| SMALL ADJUSTING CAM FOIL | 2440013 | 2440013 | 2440013 |
| BIG ADJUSTING CAM FOIL | 2440014 | 2440014 | 2440014 |
| ACTUATOR SIEMENS SQL33.03 | 2480040 | 2480040 | 2480040 |
| ACTUATOR BERGER STM30/24 | 2480090 | 2480090 | 2480090 |
| ACTUATOR SIEMENS SQM40 | 24800A5 | 24800A5 | 24800A5 |
| UV PROBE | 2510001 | 2510001 | 2510001 |
| MOTOR-PUMP COUPLING | 2540019 | 2540019 | 2540019 |
| LIGHT OIL GOVERNOR | 2570054 | 2570054 | 2570077 |
| BURNER MODULATOR (only for fully-modulating burners) | 2570112 | 2570112 | 2570112 |
| PUMP SUNTEC | 2590119 | 2590119 | 2590120 |
| PUMP DANFOSS | 2590311 | 2590311 | 2590312 |
| NOZZLE | 2610202 | 2610202 | 2610203 |
| OIL GUN | 2700231 | 2700231 | 2700236 |
| COMBUSTION HEAD | 30600R3 | 30600R3 | 30600R3 |
| BLAST TUBE | 30900M3 | 30900M4 | 30910M6 |
| IGNITION CABLE | 6050108 | 6050108 | 6050108 |
| PRINTED CIRCUIT BOARD | 6100533 | 6100533 | 6100533 |

**NOTE:** it is recommended to mention the burner ID number on the spare parts request form.

| Desription | Code | | | |
|---|---|---|---|---|
| | **HP512A** | **HP515A** | **HP520A** | **HP525A** |
| CONTROL BOX | 2020448 | 2020448 | 2020448 | 2020448 |
| IGNITION ELECTRODE | 2080292 | 2080292 | 2080292 | 2080292 |
| OIL FILTER | 2090018 | 2090018 | 2090018 | 2090018 |
| GAS FILTER - Rp 2 | 2090119 | 2090119 | 2090119 | 2090119 |
| GAS FILTER - DN65 | 2090117 | 2090117 | 2090117 | 2090117 |
| GAS FILTER - DN80 | 2090112 | 2090112 | 2090112 | 2090112 |
| GAS FILTER - DN100 | 2090113 | 2090113 | 2090113 | 2090113 |
| GASKET | 2110047 | 2110047 | 2110047 | 2110047 |
| FAN WHEEL | 2150010 | 2150030 | 2150029 | 2150029 |
| AIR PRESSURE SWITCH | 2160065 | 2160065 | 2160065 | 2160065 |
| GAS PRESSURE SWITCH- GW500 A6 | 2160087 | 2160087 | 2160087 | 2160087 |
| GAS PRESSURE SWITCH- GW150 A5 | 2160077 | 2160077 | 2160077 | 2160077 |
| GAS PRESSURE SWITCH- GW500 A5 | 2160089 | 2160089 | 2160089 | 2160089 |
| GAS PRESSURE SWITCH- GW50 A5 | 2160076 | 2160076 | 2160076 | 2160076 |
| IGNITION TRANSFORMER | 2170302 | 2170302 | 2170302 | 2170302 |
| PUMP MOTOR | 2180202 | 2180223 | 2180223 | 2180219 |
| FAN MOTOR | 2180298 | 2180209 | 2180278 | 2180289 |
| GAS VALVE GROUP - Rp2 - Siemens VGD20.. | 2190171 | 2190171 | 2190171 | 2190171 |
| GAS VALVE GROUP - DN65 - Siemens VGD40.. | 2190172 | 2190172 | 2190172 | 2190172 |
| GAS VALVE GROUP - DN80 - Siemens VGD40.. | 2190169 | 2190169 | 2190169 | 2190169 |
| GAS VALVE GROUP - DN100 - Siemens VGD40.. | 2190174 | 2190174 | 2190174 | 2190174 |
| GAS VALVE ACTUATOR SKP15 | 2190181 | 2190181 | 2190181 | 2190181 |
| GAS VALVE ACTUATOR SKP25 | 2190183 | 2190183 | 2190183 | 2190183 |
| GAS VALVE GROUP - Rp2 - Dungs MBC1200SE | 21903M5 | 21903M5 | 21903M5 | 21903M5 |
| GAS VALVE GROUP - DN65 - Dungs MBC1900SE | 21903M6 | 21903M6 | 21903M6 | 21903M6 |
| GAS VALVE GROUP - DN80 - Dungs MBC3100SE | 21903M7 | 21903M7 | 21903M7 | 21903M7 |
| GAS VALVE GROUP - DN100 - Dungs MBC5000SE | 21903M8 | 21903M8 | 21903M8 | 21903M8 |
| OIL SOLENOID VALVE | 2190403 | 2190403 | 2190403 | 2190750 |
| GAS PROVING SYSTEM | 2191604 | 2191604 | 2191604 | 2191604 |
| FLEXIBLE HOSE L=1500 1”M x 1”F | 2340004 | 2340004 | 2340004 | 2340004 |
| FLEXIBLE HOSE L=335 3/8” | 2340087 | 2340087 | 2340087 | 2340087 |
| FLEXIBLE HOSE L=385 3/8” | 2340088 | 2340088 | 2340088 | 2340088 |
| SMALL ADJUSTING CAM FOIL | 2440013 | 2440013 | 2440013 | 2440013 |
| BIG ADJUSTING CAM FOIL | 2440014 | 2440014 | 2440014 | 2440014 |
| ACTUATOR SIEMENS SQL33.03 | 2480040 | 2480040 | 2480040 | 2480040 |
| ACTUATOR BERGER STM30/24 | 2480090 | 2480090 | 2480090 | 2480090 |
| ACTUATOR SIEMENS SQM40/24 | 24800A5 | 24800A5 | 24800A5 | 24800A5 |
| UV PROBE | 2510001 | 2510001 | 2510001 | 2510001 |
| MOTOR-PUMP COUPLING | 2540019 | 2540126 | 2540126 | 2540133 |
| LIGHT OIL GOVERNOR | 2570077 | 25700B2 | 25700B2 | 25700A7 |
| SUNTEC TV LIGHT OIL GOVERNOR | - | - | - | 2570036 |
| BURNER MODULATOR (only for fully-modulating burners) | 2570112 | 2570112 | 2570112 | 2570112 |
| PUMP SUNTEC | 2590120 | 2590121 | 2590121 | 2590124 |
| PUMP DANFOSS | 2590312 | 2590313 | 2590313 | - |
| NOZZLE | 2610203 | 2610203 | 2610203 | 2610203 |
| OIL GUN | 2700232 | 2700232 | 2700232 | 2700232 |
| COMBUSTION HEAD | 30600R4 | 30600R5 | 30600R6 | 30600R6 |
| BLAST TUBE | 3091075 | 3091076 | 30910H4 | 30910L9 |
| IGNITION CABLE | 6050108 | 6050108 | 6050108 | 6050108 |
| PRINTED CIRCUIT BOARD | 6100533 | 6100533 | 6100533 | - |

**NOTE:** it is recommended to mention the burner ID number on the spare parts request form.

## TROUBLESHOOTING

| CAUSE | TROUBLE | | | | | | | | | | | | | |
|---|---|---|---|---|---|---|---|---|---|---|---|---|---|---|
| | THE BURNER DOESN'TSTART | CONTINUE WITH PRE-PURGE | DOESN'T START AND LOCK-OUT | DOESN'T START AND REPEATS THE CYCLE | STARTS AND REPEATS THE CYCLE | STARTS AND LOCK-OUTB | THE FLAME MONITOR DEVICE DOESN'T GIVECONSENT TO START | DOESEN'T SWITCH TO HIGH FLAME | DOESEN'T RETURN IN LOW FLAME | HE SERVO CONTROL IS LOCK AND VIBRATE | LOCK-OUT DURING OPERATION | TURNS OF AND REPEATS CYCLE DURING OPERATION | URNS OF AND REPEATS CYCLE DURING OPERATION | URNS OF AND REPEATS CYCLE DURING OPERATION |
| MAIN SWITCH OPEN | ● | | | | | | | | | | | | | |
| LACK OF GAS | ● | | | ● | | | | | | | | | | |
| MAXIMUM GAS PRESSURE SWITCH DEFECTIVE (IF PROVIDED) | ● | | ● | | | | | | | | | | | |
| THERMOSTATS/PRESSURE SWITCHES DEFECTIVE | ● | | | ● | | | | | | | | ● | | |
| FAN MOTOR THERMAL CUTOUT INTERVENTION | ● | | | | | | | | | | | | | |
| OVERLOAD TRIPPED INTERVENTION | ● | | | | | | | | | | | | | ● |
| AUXILIARY FUSES INTERRUPTED | ● | | | | | | | | | | | | | |
| CONTROL BOX FAULTY | ● | ● | ● | | | ● | | | | | ● | | | |
| DEFECTIVE ACTUATOR | ● | ● | ● | | | | ● | | | | | | | |
| AIR PRESSURE SWITCH FAULT OR BAD SETTING | ● | | | | | ● | ● | | | | ● | | | |
| MINIMUM GAS PRESSURE SWITCH DEFECTIVE OR GAS FILTER DIRTY | ● | | | ● | ● | | ● | | | | | ● | | |
| IGNITION TRANSFORMER FAULT | | | ● | | | | | | | | | | | |
| IGNITION ELECTRODES BAD POSITION | | | ● | | | | | | | | | | | |
| BUTTERFLY VALVE BAD SETTING | | | ● | | | ● | | | | | | | | |
| DEFECTIVE GAS GOVERNOR | | | ● | ● | ● | | | | | | | ● | | |
| GAS VALVE DEFECTIVE | | | ● | | | | | | | | | | | |
| BAD CONNECTION OR DEFECTIVE HIGH/LOW FLAME THERMOSTAT OR PRESSURE SWITCH | | | | | | | | ● | ● | ● | | | | |
| WRONG SETTING ACTUATOR CAM | | | | | | | ● | ● | ● | | | | | |
| UV PROBE DIRTY OR DEFECTIVE | | | ● | | | ● | | | | | ● | | | |
| OIL FILTER DIRTY | | | | | | | | | | | | | ● | |

**SIEMENS LFL 1.3.. CONTROL BOX**

Automatic programme in the event of interruption and indication of position when interrupted

By default, in the event of any kind of interruption, the flow of fuel is immediately interrupted. At the same time the programmer stops and this indicates the position at the time of the interruption.

A symbol on the indicator disc shows each time the type of stoppage:

◄ No start-up (for example fault in the CLOSED signal for the limit contact "Z" at terminal 8 or some other contact between the terminals 12 and 4 or 4 and 5 is not closed).

◄ Start-up suspended because of a fault in the OPEN signal for the limit contact "A" at terminal 8.

**P** Block due to absence of air pressure signal. From this moment onwards any absence of air pressure will cause a block.

■ Block due to malfunction of the flame detector circuit.

▼ Start-up interrupted because there is a fault in the MINMUM signal for the auxiliary contact of the damper servo motor at terminal 8.

**1** Block due to absence of flame signal at the end of the 1st safety period.

From this moment onwards any absence of a flame signal will cause a block.

**2** Blockdue to absence of flame signal at the end of the 2nd safety period (flame signal of main burner).

▌ Blockdue to absence of flame signal or air pressure during operation.

Where a block stoppage occurs at any moment between switch on and pre-ignition without registering any symbol, the cause is normally an unscheduled flame signal.

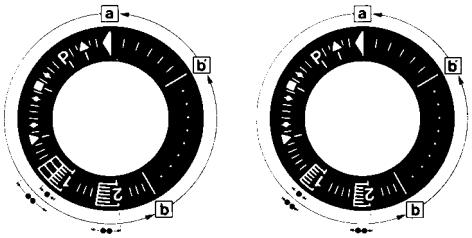


a-b Start-up programme

b-b' For time variants:move the programmer on to the automatic stop after the burner starts up (b' = position of the programmer during normal burner operation).

b(b')-aPost-ventilation programme after a regulation stop.At the start-up position "a" the programmer stops automatically.

. Safety time duration for mono-tube burners

.. Safety time duration for twin-tube burners

The apparatus can be reset immediately after a block. After resetting (and after the elimination of any problem causing the stoppage or after a power failure) the programmer returns to its start-up position. In this event only the terminals 7, 9, 10 and 11 are live in accordance with the monitoring programme. Only after this the device programs a new startup.

**Operation**

The wiring system and also the control system of the programmer "P" have already been given in this manual. The response signals required for the active parts and the flame monitor circuit are shown by a hatching.

In the absence of these response signals the mechanism interrupts the start-up programme; the exact time of the interruption can be identified from the visual indicator and will cause a block if the safety code requires it.

A consent to start-up by means of the thermostat or pressostat "R"

A-B start-up program

B-C normal burner operation

C regulation stop caused by "R"

C-D programmer returns to start-up position A.

During the regulation stop only terminals 11 and 12 are live and the damper, through the limit contact "Z" of its servo-motor is in the CLOSED position.The flame detector circuit F is activated (terminals 22 and 23 or 23/4) for the detector test and the paracitic light test.

Where the burners do not have dampers (or have an independent 00 damper control mechanism) there must be a bridge between terminals 6 and 8, otherwise the mechanism will not start up the burner.

For a burner to start up the following conditions must be met:

- Mechanism not blocked/reset.
- Damper closed.Limit contact switchZ must be in the CLOSED position and allow current to flow between terminals 11 and 8.
- Any contacts checking that the fuel valve (bv...) is closed, or other contacts with similar functions, must be closed between terminal 12 and the air pressostat LP.
- The contact for the air pressostat LP must be in the off position (LP test) so as to feed terminal 4.
- The gas pressostat contacts GP and the safety thermostat and pressostat contacts W must also be closed.

**Start-up program**

A Start-up

(R closes the start-up control ring between terminals 4 and 5)

The programmer starts up.At the same time the ventilator motor is fed through terminal 6 ( only for pre-ventilation) and, after t7, the ventilator motor or the combustion gas exhaust fan is fed through terminal 7 (pre-ventilation and post-ventilation).

At the end of t16, the command opening the damper passes through terminal 9; during the damper opening time the programmer does not move since terminal 8, through which the programmer is fed, is dead.

Only once the damper is fully open and the limit contact switch A has switched on, feeding terminal 8, does the programme proceed.

t1 Pre-ventilation time with damper fully open (nominal air flow).

Shortly after the beginning of the pre-ventilation time, the air pressostat should switch off the current between terminals 4 and 13;otherwisethe apparatus would block (air pressure monitor).

At the same time the terminal 14 should be live since current feeding the ignition transformer and the fuel valves passes through this circuit.

During pre-ventilation time the flame detector circuit is checked and in the event of an operational defect the monitor brings about a block.

At the end of the pre-ventilation time the monitor automatically moves the damper servo-motor, through terminal 10, to the flame ignition position which is governed by the auxiliary contact "M".

During this period the programmer stops until terminal 8, is again activatedthrough contact "M".

After a few seconds the little programmer motor is directly fed by the active part of the apparatus.

After this point terminal 8 plays no further part in the burner ignition process.

**Mono-tube burner**

t3 Pre-ignition time waiting the response from the fuel valve at terminal 18.

t2 Safety time (start up flame strenght); at the end of the safety time a flame signal should appear at terminal 22 of the amplifier and it should stay on until a regulation stop; if this does not happen the mechanism will block.

t4 Interval; at the end of t4, terminal 19 is live.

t5 Interval At the end of t5 terminal 20 is live.At the same time the monitor outlets from 9 and 11 and terminal 8 into the active part of the apparatus are kept galvanically separatedso as to protect the monitor itself from recovery voltage through the capacity regulator circuit.

**Twin-tube burners (**)**

t3 Preignition time until the all clear to the pilot burner valve at terminal 17.

t2 First safety time (pilot flame strenght); at the end of the safety time a flame signal should appear at terminal 22 of the amplifier and it should stay on, until a regulation stop; if it does not, the apparatus will block.

t4 Interval until the consent to the fuel valve at terminal 19, for the first flame of the main burner.

t9 2nd safety time; at the end of the second safety time the main burner should be lit by means of the pilot. At the end of this period, terminal 17 is dead and therefore the pilot burner will be out.

t5 Interval; at the end of t5 terminal 20 is live. At the same time the monitor outlets from 9 to 11 and the terminal 8at the input of the active part of the apparatus are galvanically separated so as to protect the apparatus itself from recovery voltage through the strenght regulator circuit.

When the strenght regulator LR at terminal 20 gives the consent, the start-up programme for the apparatus comes to an end. Depending on time variants, the programmer stops either immediately or at the end of a set time, without effecting the position of the contacts.

B Operational position of the burner

B-C Burner operation (production of heat)

While the burner is working the strnght regulator controls the damper, according to the demand for heat, by means of the positioning at nominal load of the auxiliary contact "V" of the damper servocontrol.

C Regulation stop for operation of "R"

When there is a regulation stop the fuel valves immediately close. At the same time the programmer starts to programme:

t6 Post-ventilation time (post-ventilation with the ventilator "G" at terminal 7).Shortly after beginning of the post-ventilation time terminal 10 becomes live and moves the damper to the "MIN" position. The full closure of the damper only happens towards the end of the post-ventilation time and is prompted by an automatic signal from terminal 11

t13 Admissible post-ignition time

During this time the flame monitor circuit may still receive a flame signal without the apparatus blocking.

D-A End of automatic programme

At the end of t6, at the point where the programmer and the automatic contacts have reverted to the starter position, the detection probe test restarts.

During an operational stop even an unscheduled flame signal lasting a few seconds can cause a block because during this period an NTC in the circuit acts as retarder.This means that brief unscheduled influences cannot cause a block.

(**) Times t3, t2 and t4 only apply only to safety devices in the series 01.

**Specifications**

| | |
|---|---|
| Mains voltage | 220V -15%...240V +10% |
| Frequency | 50Hz -6%...60Hz +6% |
| Absorbed capacity | 3.5 VA |
| Built-in fuse | T6.3/250E slow action DIN41571 No. 451915070 |
| External fuse | max. 16A |
| Interference | N-VDE0875 |
| Flow permitted at terminal 1 | 5A (DIN 0660 AC3) |
| Flow permitted at control terminals | 4A (DIN 0660 AC3) |
| Flow at monitor contacts: | |
| input at terminals 4 & 5 | 1A, 250V |
| input at terminals 4 & 11 | 1A, 250V |
| input at terminals 4 & 14 | function of the load at terminals 16 and 19, min.1A, 250V |
| Emplacement | Any |
| Protection | IP40 |
| Permitted ambient temp | -20...+60° C |
| Min.temperature (trans/storage) | -50° C |
| Weight: | |
| apparatus | approx. 1,000g. |
| base | approx. 165g. |

**Ionisation monitor**

| | |
|---|---|
| voltage in detector electrode | |
| normal working | 330V ±10% |
| test | 380V ±10% |
| short circuit current | max. 0,5 mA |
| Ionisation current, min.request | 6 µA |
| max. permitted length for connecting cables | |
| normal cable (laid separately**) | 80m |
| armoured cable(high frequency) | protection at terminal 22 140m |
| UV monitor | |
| Voltage in UV detector | |
| normal working | 330V ±10% |
| test | 380V ±10% |
| Detector current, min. request* | 70µA |
| Max. detector current | |
| normal working | 630 µA |
| test | 1300 µA |
| Max.length of connecting cable | |
| normal cable (laid separately**) | 100m |
| armoured cable (high frequency) | protected at terminal 22 200m |
| Weight | |
| QRA2 | 60 g |
| QRA10 | 450 g. |

*Connect up in parallel to the measuring device a condenser 100µF, 10...25V.

** The wire connecting up the detector electrode should not be in the same sleeve as the other conductor wires.

Ignition spark monitor with QRE1 series 02 detector

| | |
|---|---|
| Minimum detector current | 30µA |

**Operating times**

| | | |
|---|---|---|
| t7 initial delay for ventilator G2 | 2 | |
| t16 initial delay of air damper OPEN consent | | 4 |
| t11 opening time for damper | any | |
| t10 initial delay for air pressure monitor | 8 | |
| t1 pre-ventilation time with damper open | 36 | |
| t12 travel time for air damper to MIN position | any | |
| t3 t3' pre-ignition time | t3 | 4 |
| | t3 | '- |
| t2 t2' safety time (1st safety time for burners with intermittent pilot lighter | t2 | 2 |
| | t2 | '- |
| t4 t4' interval between start of t2 and response to valve at terminal 19 | t4 | 10 |
| | t4 | '- |
| t9 2nd safety time for burners with intermittent pilot lighter | 2 | |
| t5 interval between end of t4 and response at terminal 20 | 10 | |
| t20 interval before programmer cuts out after start-up- duration of start-up | | 60 |
| t6 post-ventilation time (G2 only) | | 12 |
| t13 permitted post-ignition time | | 12 |
| t16 initial delay from opening consent of the air damper | | |

t20 interval until the automatic shut-off of the programming mechanism after the burner start

**Key**

| | |
|---|---|
| A | limit contact switch for damper OPEN position |
| AI | block remote signal |
| AR | main relay (working network) with contacts "ar" |
| AS | Monitor fuse |
| BR | block relay with "br" contacts |
| BV | fuel valve |
| EK | reset button |
| FE | detector electrode of ionisation circuit |
| FR | flame relay with "fr" contacts |
| G | ventilator motor or burner motor |
| GP | gas pressure switch |
| H | main interruptor switch |
| L | block stoppage LED |
| LK | air damper |
| LP | air pressostat |
| LR | safety regulator |
| M | auxiliary contact switch for damper "MIN" position |
| QRA | UV detector |
| QRE | ignition spark detector |
| R | thermostat or pressostat |
| S | fuse |
| SA | damper servo-motor |
| SM | synchronous programmer motor |
| V | flame signal amplifier |
| V | in case of servo-motor: auxiliary contact for response to fuel valve with regard of damper position |
| W | safety pressostat or thermostat |
| Z | ignition transformer |
| Z | in case of servomotor: end of limit contact switch for damper CLOSED position |
| ZBV | pilot burner fuel valve |
| ° | for mono-tube burners |
| °° | for twin-tube burners |

(1) input for raising QRA detector voltage to test level
(2) input for excitation of flame relay during flame detector test circuit (contact XIV) and during safety time (contact IV)
(3) Do not press EK for more than 10 seconds

**Programmer diagram**

t1 pre-ventilation time
t2 safety time
*t2 '1st safety time
t3 pre-ignition time
*t3 'pre-ignition time
t4 interval for creating current between terminals 18 and 19
*t4 'interval for creating current between terminals 17 and 19
t5 interval for creating current between terminals 19 and 20
t6 post-ventilation time
t7 interval between startup consent and current created at terminal 7
t8 duration of start-up
*t9 2nd safety time
t10 interval before air pressure monitoring begins
t11 damper opening travel time
t12 damper closure travel time
t13 permissible post-combustion time
t16 initial delay of damper OPEN response
t20 interval before programmer automatically stops

* These times are valid with the use of a series 01 safety device for monitoring burners with intermittent pilot lighter.

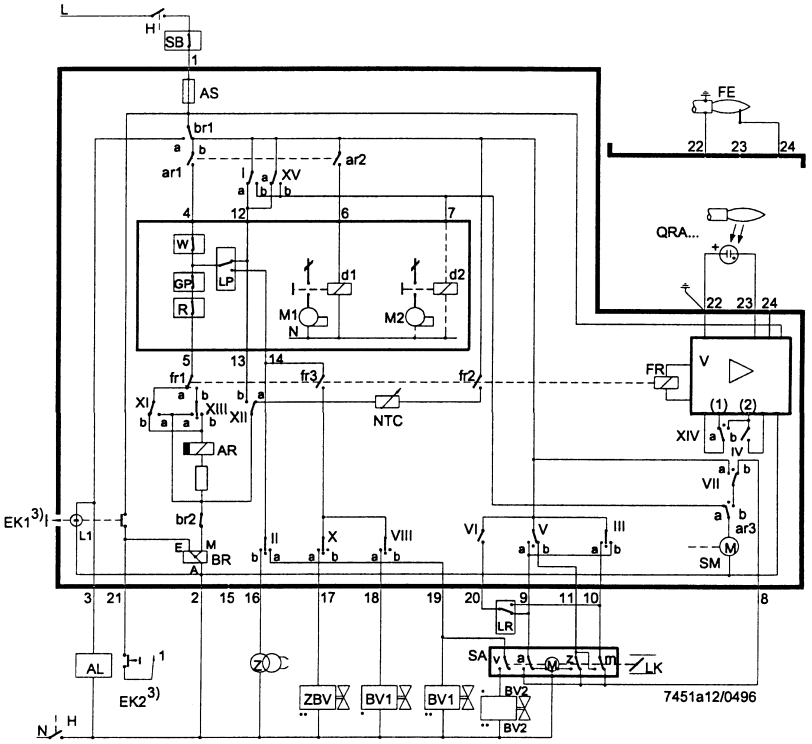


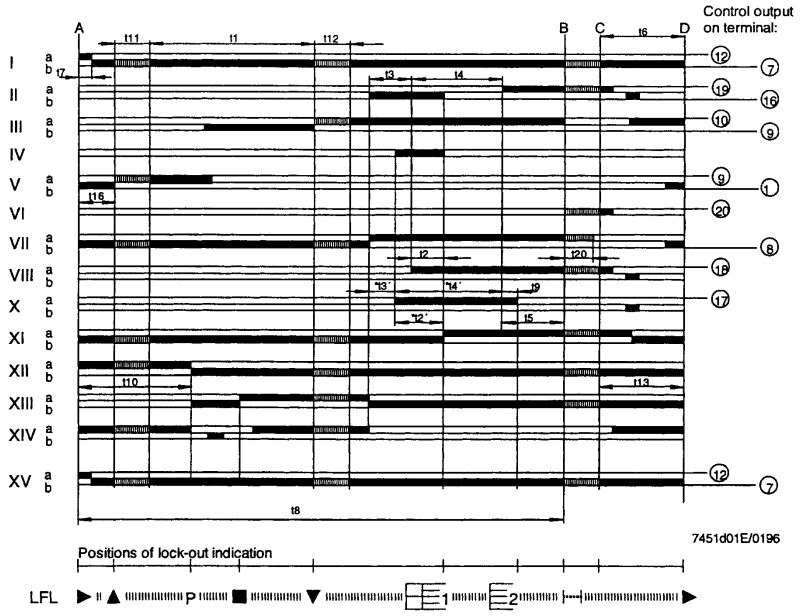

C.I.B. UNIGAS S.p.A.
Via L.Galvani, 9 - 35011 Campodarsego (PD) - ITALY
Tel. +39 049 9200944 - Fax +39 049 9200945/9201269
web site: www.cibunigas.it - e-mail: cibunigas@cibunigas.it

Note: specifications and data subject to change. Errors and omissions exceptd.

CIB UNIGAS

# WIRING DIAGRAMS

## WIRING DIAGRAMS

**ATTENTION:**

1- Power supply 400V 50 Hz, 3N a.c.
2- Don’t reverse phase with neutral
3- Ensure burner is properly hearted

**WIRING DIAGRAM .Cod. 21-019**

**WIRING DIAGRAMHP525 MG.PR..Cod. 11-336/1 - Progressive burners**

**WIRING DIAGRAM HP525 MG.MD.. Cod. 11-339/1 - Fully modulating burners**

# VERSIONE PROGRESSIVA "PR"

## "PR" PROGRESSIVE VERSION

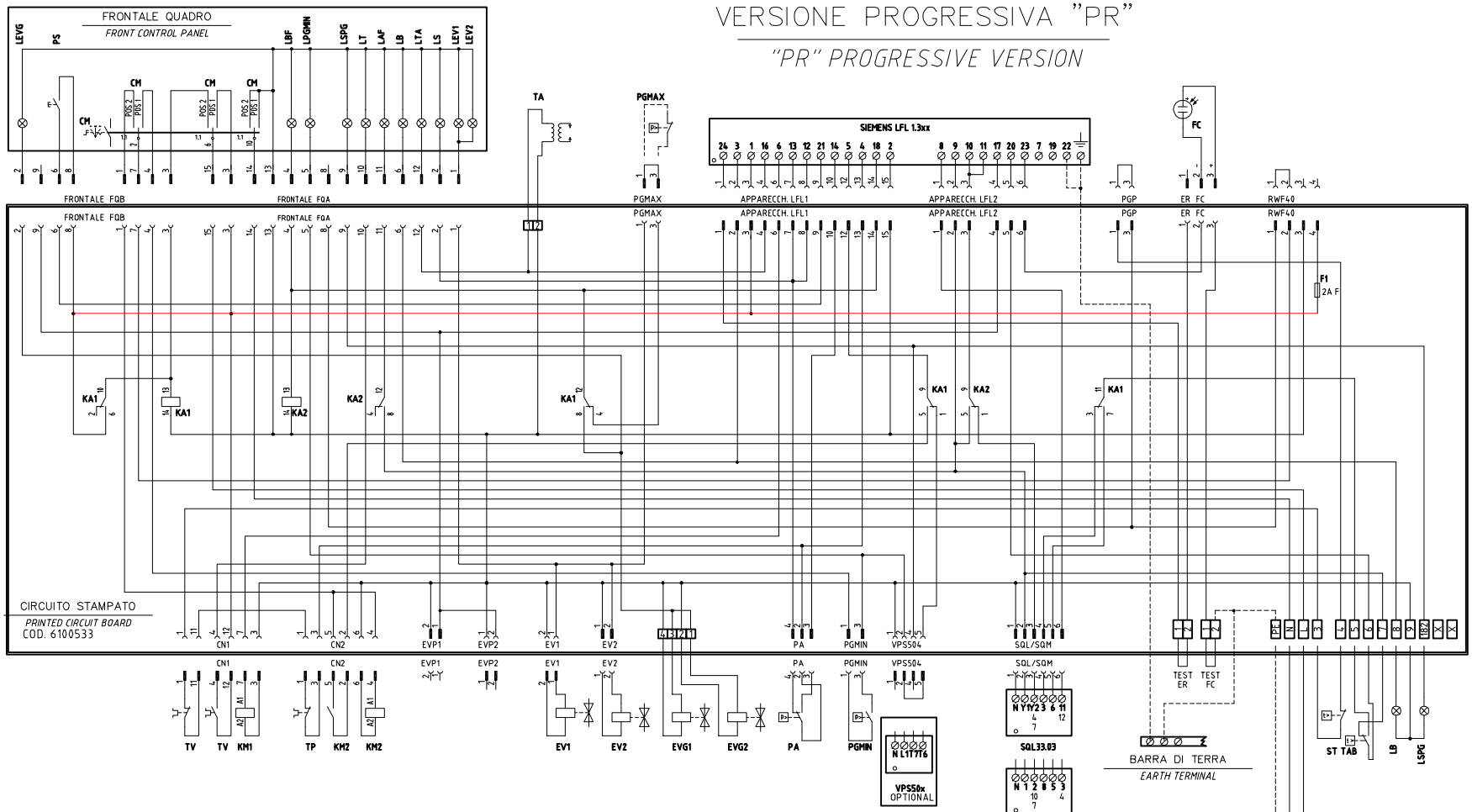


SERVOCOMANDO SERRANDA ARIA (ALTERNATIVO)

*AIR DAMPER ACTUATOR (ALTERNATIVE)*

STM30/24Q15.51/641NLP

| | |
|---|---|
| I | ALTA FIAMMA<br>*HIGH FLAME* |
| II | SOSTA E ACCENSIONE<br>*STAND-BY AND IGNITION* |
| III | BASSA FIAMMA GAS<br>*GAS LOW FLAME* |
| V | BASSA FIAMMA GASOLIO<br>*LIGHT OIL LOW FLAME* |

SERVOCOMANDO SERRANDA ARIA

*AIR DAMPER ACTUATOR*

SQL33.03

| | |
|---|---|
| Y1 | ALTA FIAMMA<br>*HIGH FLAME* |
| Y2 | SOSTA E ACCENSIONE<br>*STAND-BY AND IGNITION* |
| 3 | BASSA FIAMMA GAS<br>*GAS LOW FLAME* |
| 6 | BASSA FIAMMA GASOLIO<br>*LIGHT OIL LOW FLAME* |

SERVOCOMANDO SERRANDA ARIA (ALTERNATIVO)

*AIR DAMPER ACTUATOR (ALTERNATIVE)*

SQM40.265Axx

| | |
|---|---|
| I | ALTA FIAMMA<br>*HIGH FLAME* |
| II | SOSTA E ACCENSIONE<br>*STAND-BY AND IGNITION* |
| III | BASSA FIAMMA GAS<br>*GAS LOW FLAME* |
| IV | BASSA FIAMMA GASOLIO<br>*LIGHT OIL LOW FLAME* |
| V | NON USATA<br>*NOT USED* |
| VI | NON USATA<br>*NOT USED* |

ALIMENTAZIONE AUSILIARI BRUCIATORE

*BURNER AUXILIARY SUPPLY*

VEDI FOGLIO [3]

*SEE SHEET [3]*

| | | | |
|---|---|---|---|
| Data 01/10/2008 | | PREC. | FOGLIO |
| Revisione 01 | | / | 1 |
| Dis. N. 21 – 019 | | SEGUE | TOTALE |
| | | 2 | 3 |

# VERSIONE MODULANTE "MD"

## "MD" MODULATING VERSION

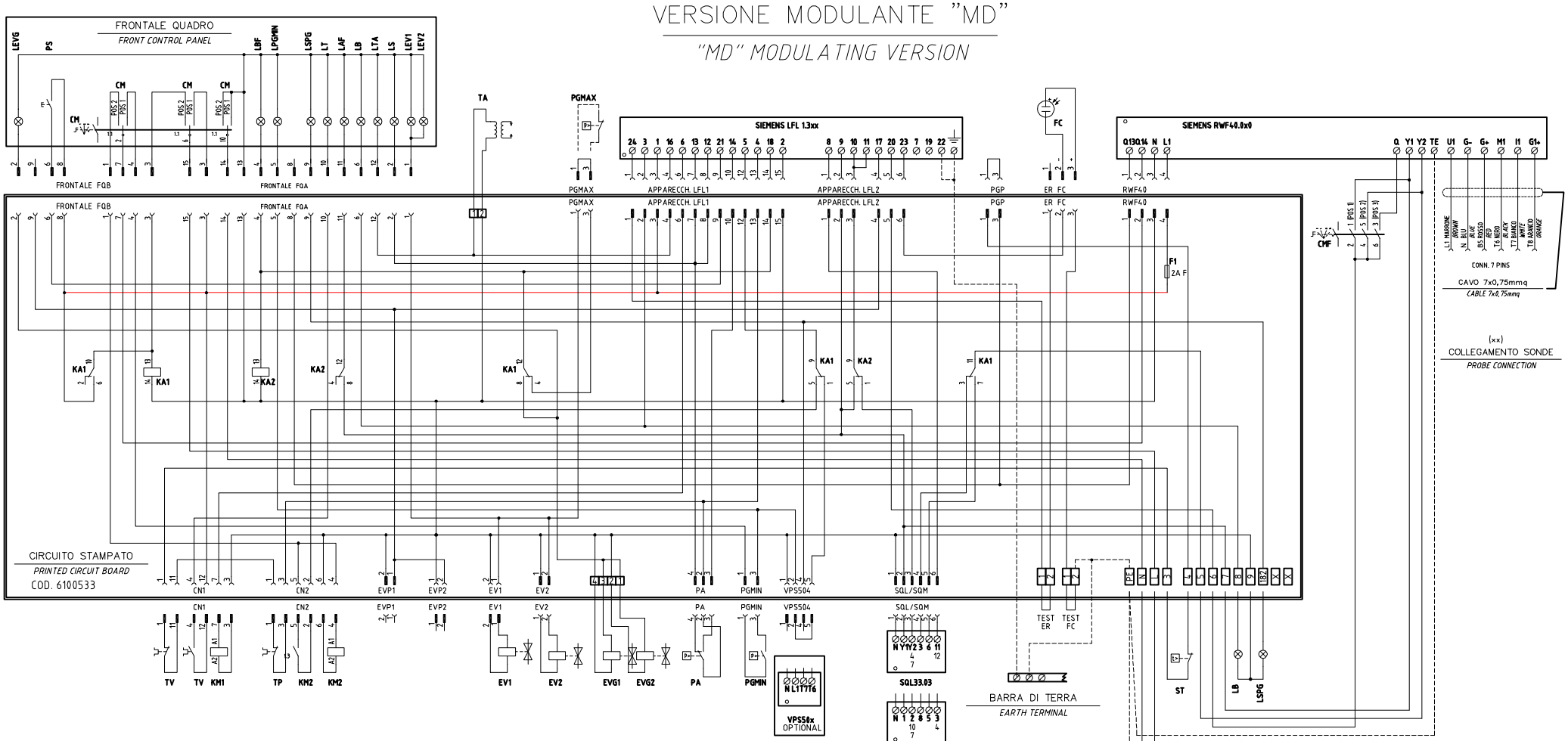


SERVOCOMANDO SERRANDA ARIA (ALTERNATIVO)
*AIR DAMPER ACTUATOR (ALTERNATIVE)*
STM30/24Q15.51/641NLP

| | |
|---|---|
| I | ALTA FIAMMA<br>*HIGH FLAME* |
| II | SOSTA E ACCENSIONE<br>*STAND-BY AND IGNITION* |
| III | BASSA FIAMMA GAS<br>*GAS LOW FLAME* |
| V | BASSA FIAMMA GASOLIO<br>*LIGHT OIL LOW FLAME* |

SERVOCOMANDO SERRANDA ARIA
*AIR DAMPER ACTUATOR*
SQL33.03

| | |
|---|---|
| Y1 | ALTA FIAMMA<br>*HIGH FLAME* |
| Y2 | SOSTA E ACCENSIONE<br>*STAND-BY AND IGNITION* |
| 3 | BASSA FIAMMA GAS<br>*GAS LOW FLAME* |
| 6 | BASSA FIAMMA GASOLIO<br>*LIGHT OIL LOW FLAME* |

SERVOCOMANDO SERRANDA ARIA (ALTERNATIVO)
*AIR DAMPER ACTUATOR (ALTERNATIVE)*
SQM40.265Axx

| | |
|---|---|
| I | ALTA FIAMMA<br>*HIGH FLAME* |
| II | SOSTA E ACCENSIONE<br>*STAND-BY AND IGNITION* |
| III | BASSA FIAMMA GAS<br>*GAS LOW FLAME* |
| IV | BASSA FIAMMA GASOLIO<br>*LIGHT OIL LOW FLAME* |
| V | NON USATA<br>*NOT USED* |
| VI | NON USATA<br>*NOT USED* |

| | | | |
|---|---|---|---|
| Data 01/10/2008 | | PREC. 1 | FOGLIO 2 |
| Revisione 01 | | | |
| Dis. N. 21 – 019 | | SEGUE 3 | TOTALE 3 |

| SIGLA/ITEM | FUNZIONE | FUNCTION |
|---|---|---|
| CM | SELETTORE MANUALE COMBUSTIBILE 1) GAS 0) OFF 2) GASOLIO | COMBUSTIBLE SELECTOR 1)GAS 0)OFF 2)LIGHT OIL |
| CMF | COMMUT. MANUALE FUNZ. 0)FERMO 1)ALTA FIAMMA 2)BASSA FIAMMA 3)AUTOMATICO | MANUAL SWITCH 0)OFF 1)HIGH FLAME 2)LOW FLAME 3)AUTOMATIC |
| EV1 | ELETTROVALVOLA GAS LATO RETE (O GRUPPO VALVOLE) | GAS ELECTRO-VALVE UPSTREAM (OR VALVES GROUP) |
| EV2 | ELETTROVALVOLA GAS LATO BRUCIATORE (O GRUPPO VALVOLE) | GAS ELECTRO-VALVE DOWNSTREAM (OR VALVES GROUP) |
| EVG1 | ELETTROVALVOLA GASOLIO | LIGHT OIL ELECTRO-VALVE |
| EVG2 | ELETTROVALVOLA GASOLIO | LIGHT OIL ELECTRO-VALVE |
| F1 | FUSIBILE AUSILIARIO | AUXILIARY FUSE |
| F2 | FUSIBILI LINEA MOTORE VENTILATORE | FAN MOTOR LINE FUSES |
| F3 | FUSIBILE DI LINEA | LINE FUSE |
| F4 | FUSIBILI LINEA POMPA | PUMP LINE FUSES |
| FC | SONDA UV RILEVAZIONE FIAMMA | UV FLAME DETECTOR |
| IG | INTERRUTTORE GENERALE | MAIN DISCONNECTOR |
| KA1 | RELE' AUSILIARIO | AUXILIARY RELAY |
| KA2 | RELE' AUSILIARIO | AUXILIARY RELAY |
| KM1 | CONTATTORE MOTORE VENTILATORE | FAN MOTOR CONTACTOR |
| KM2 | CONTATTORE MOTORE POMPA GASOLIO | LIGHT OIL PUMP MOTOR CONTACTOR |
| LAF | LAMPADA SEGNALAZIONE ALTA FIAMMA BRUCIATORE | BURNER IN HIGH FLAME INDICATOR LIGHT |
| SIEMENS LFL 1.3xx | APPARECCHIATURA CONTROLLO FIAMMA | FLAME MONITOR DEVICE |
| SIEMENS RWF40.0x0 | REGOLATORE MODULANTE | BURNER MODULATOR |
| LB | LAMPADA SEGNALAZIONE BLOCCO BRUCIATORE | INDICATOR LIGHT FOR BURNER LOCK-OUT |
| LBF | LAMPADA SEGNALAZIONE BASSA FIAMMA BRUCIATORE | BURNER IN LOW FLAME INDICATOR LIGHT |
| LEV1 | LAMPADA SEGNALAZIONE APERTURA [EV1] | INDICATOR LIGHT FOR OPENING OF ELECTRO-VALVE [EV1] |
| LEV2 | LAMPADA SEGNALAZIONE APERTURA [EV2] | INDICATOR LIGHT FOR OPENING OF ELECTRO-VALVE [EV2] |
| LEVG | LAMPADA SEGNALAZIONE APERTURA [EVG1/2] | INDICATOR LIGHT FOR OPENING OF ELECTRO-VALVE [EVG1/2] |
| LPGMIN | LAMPADA SEGNALAZIONE PRESENZA GAS IN RETE | INDICATOR LIGHT FOR PRESENCE OF GAS IN THE NETWORK |
| LS | LAMPADA SEGNALAZIONE SOSTA BRUCIATORE | INDICATOR LIGHT FOR BURNER STAND-BY |
| LSPG | LAMPADA SEGNALAZIONE BLOCCO CONTROLLO TENUTA VALVOLE | INDICATOR LIGHT FOR LEAKAGE OF VALVES |
| LT | LAMPADA SEGNALAZIONE BLOCCO TERMICO MOTORE VENTILATORE | INDICATOR LIGHT FOR FAN OVERLOAD TRIPPED |
| LTA | LAMPADA SEGNALAZIONE TRASFORMATORE DI ACCENSIONE | IGNITION TRANSFORMER INDICATOR LIGHT |
| MP | MOTORE POMPA GASOLIO | LIGHT OIL PUMP MOTOR |
| MV | MOTORE VENTILATORE | FAN MOTOR |
| PA | PRESSOSTATO ARIA | AIR PRESSURE SWITCH |

| SIGLA/ITEM | FUNZIONE | FUNCTION |
|---|---|---|
| PGMAX | PRESSOSTATO GAS DI MASSIMA PRESSIONE (OPTIONAL) | MAXIMUM PRESSURE GAS SWITCH (OPTIONAL) |
| PGMIN | PRESSOSTATO GAS DI MINIMA PRESSIONE | MINIMUM GAS PRESSURE SWITCH |
| PS | PULSANTE SBLOCCO FIAMMA | LOCK-OUT RESET BUTTON |
| PT100 | SONDA DI TEMPERATURA | TEMPERATURE PROBE |
| SD-0÷10V | SEGNALE IN TENSIONE | TENSION SIGNAL |
| SD-4÷20mA | SEGNALE IN CORRENTE | CURRENT SIGNAL |
| SD-PRESS | SONDA DI PRESSIONE | PRESSURE PROBE |
| SD-TEMP. | SONDA DI TEMPERATURA | TEMPERATURE PROBE |
| SQL33.03 | SERVOCOMANDO SERRANDA ARIA | AIR DAMPER SERVO CONTROL |
| SQM40.265Axx | SERVOCOMANDO SERRANDA ARIA | AIR DAMPER SERVO CONTROL |
| ST | SERIE TERMOSTATI/PRESSOSTATI | SERIES OF THERMOSTATS OR PRESSURE SWITCHES |
| STM30/24Q15.51/641NLP | SERVOCOMANDO SERRANDA ARIA (ALTERNATIVO) | AIR DAMPER SERVO CONTROL (ALTERNATIVE) |
| TA | TRASFORMATORE DI ACCENSIONE | IGNITION TRANSFORMER |
| TAB | TERMOSTATO/PRESSOSTATO ALTA-BASSA FIAMMA | HIGH-LOW THERMOSTAT/PRESSURE SWITCHES |
| TC | TERMOCOPPIA | THERMOCOUPLE |
| TP | TERMICO MOTORE POMPA GASOLIO | LIGHT OIL PUMP MOTOR THERMAL |
| TV | TERMICO MOTORE VENTILATORE | FAN MOTOR THERMAL |
| VPS50x | CONTROLLO DI TENUTA VALVOLE GAS (OPTIONAL) | GAS LEAKAGE MONITOR DEVICE (OPTIONAL) |

(xx)
COLLEGAMENTO SONDE
*PROBE CONNECTION*

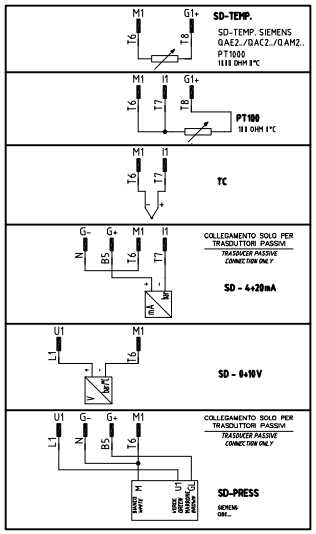


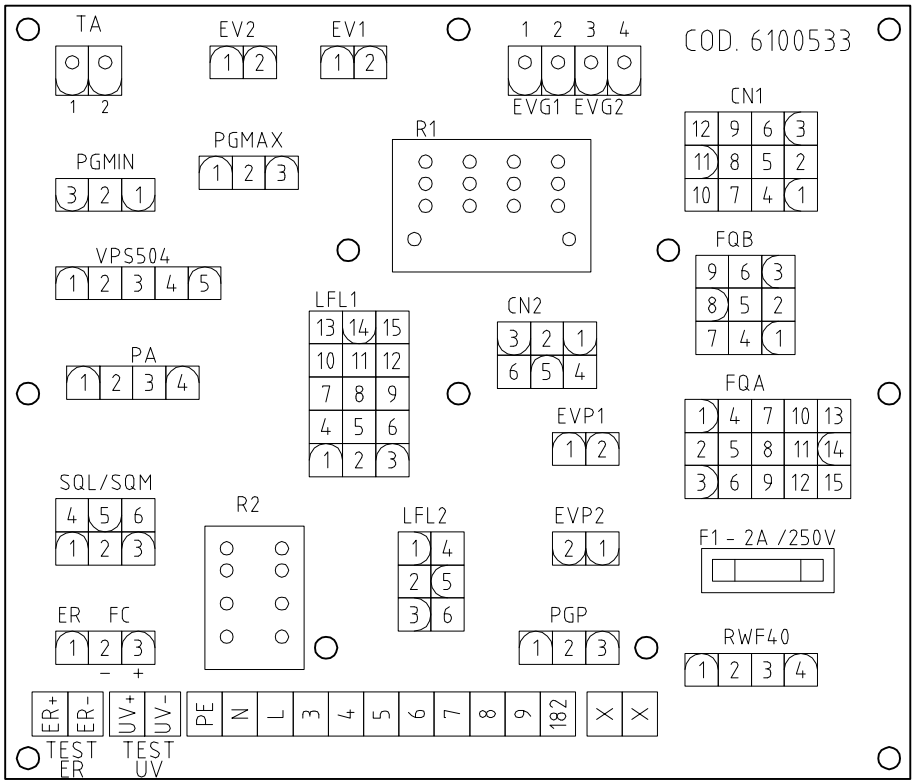


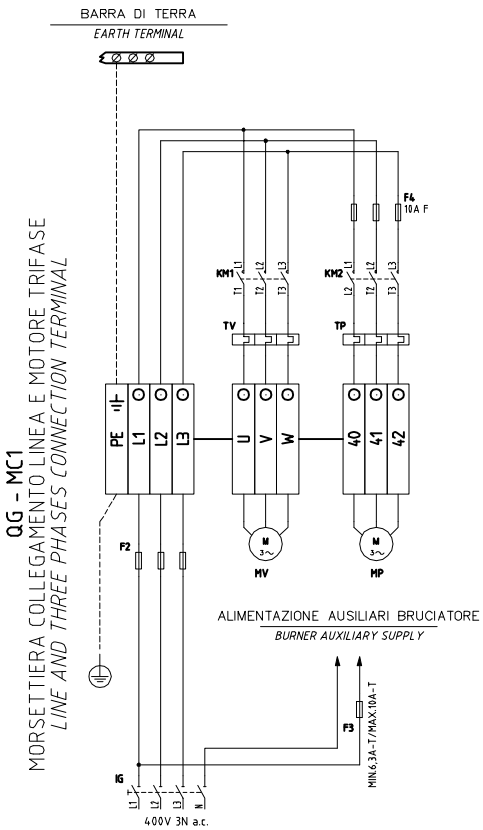


| | | | |
|---|---|---|---|
| Data 01/10/2008 | PREC. 2 | FOGLIO 3 |
| Revisione 01 | | |
| Dis. N. 21 – 019 | SEGUE / | TOTALE 3 |

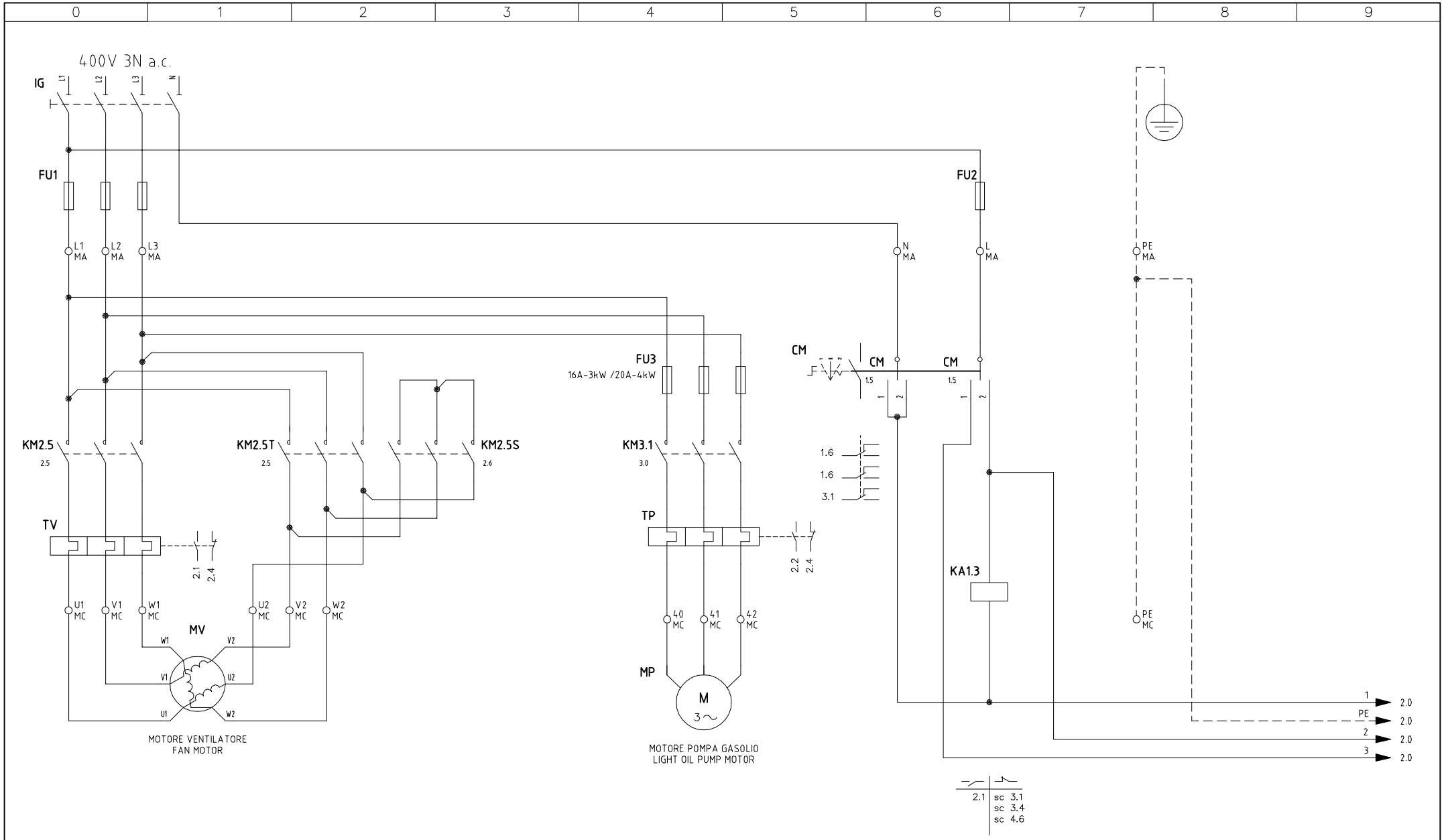


| | | | |
|---|---|---|---|
| Data 12/07/2005 | | PREC. | FOGLIO |
| Revisione 03 | | / | 1 |
| Dis. N. 11 – 336 | | SEGUE | TOTALE |
| | | 2 | 6 |

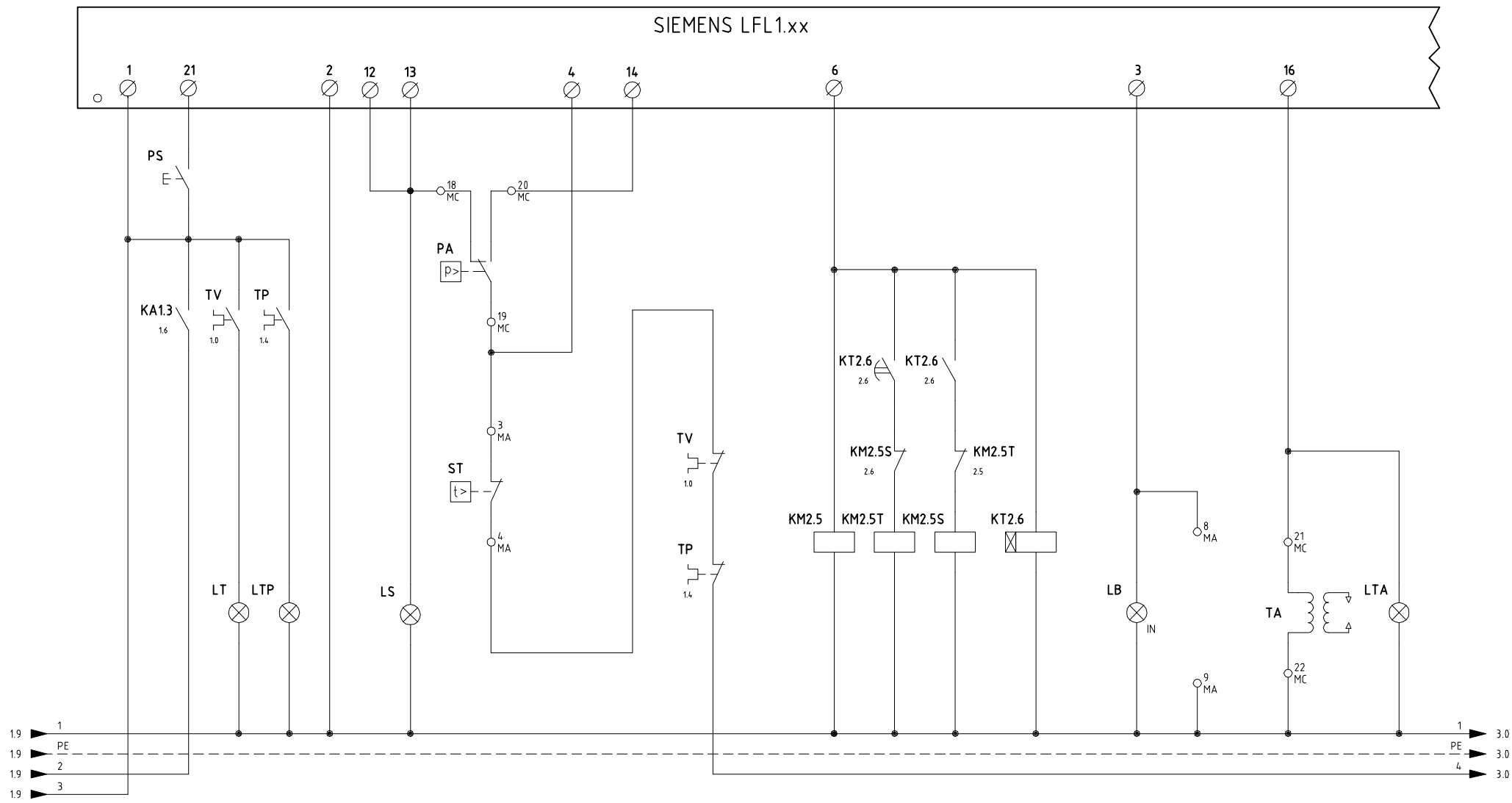


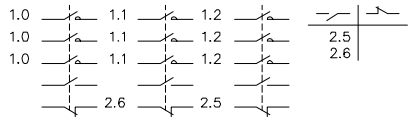


| | | | |
|---|---|---|---|
| Data 12/07/2005 | | PREC. | FOGLIO |
| Revisione 03 | | 1 | 2 |
| Dis. N. 11 – 336 | | SEGUE | TOTALE |
| | | 3 | 6 |

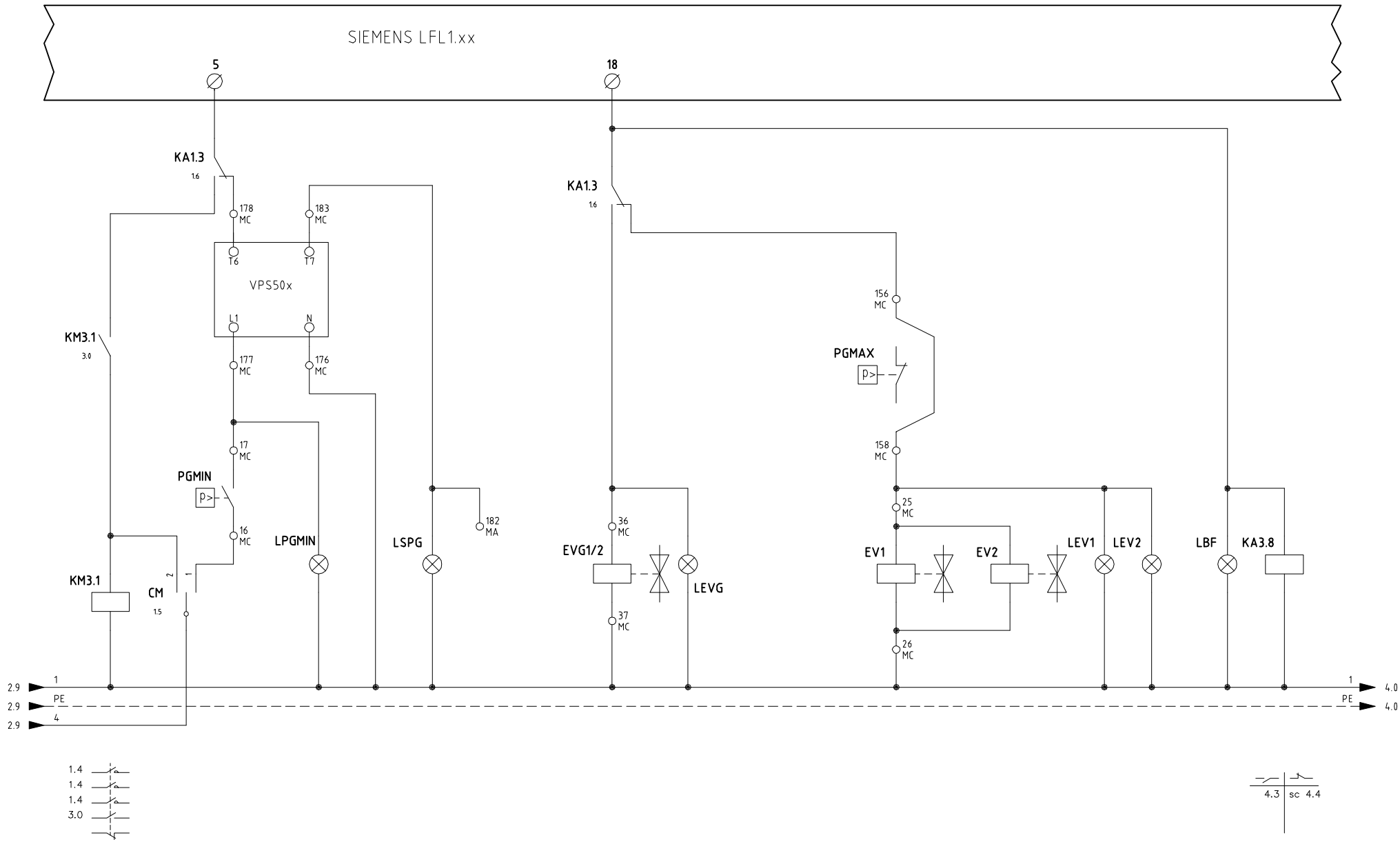


| | | | |
|---|---|---|---|
| Data 12/07/2005 | | PREC. | FOGLIO |
| Revisione 03 | | 2 | 3 |
| Dis. N. 11 – 336 | | SEGUE | TOTALE |
| | | 4 | 6 |

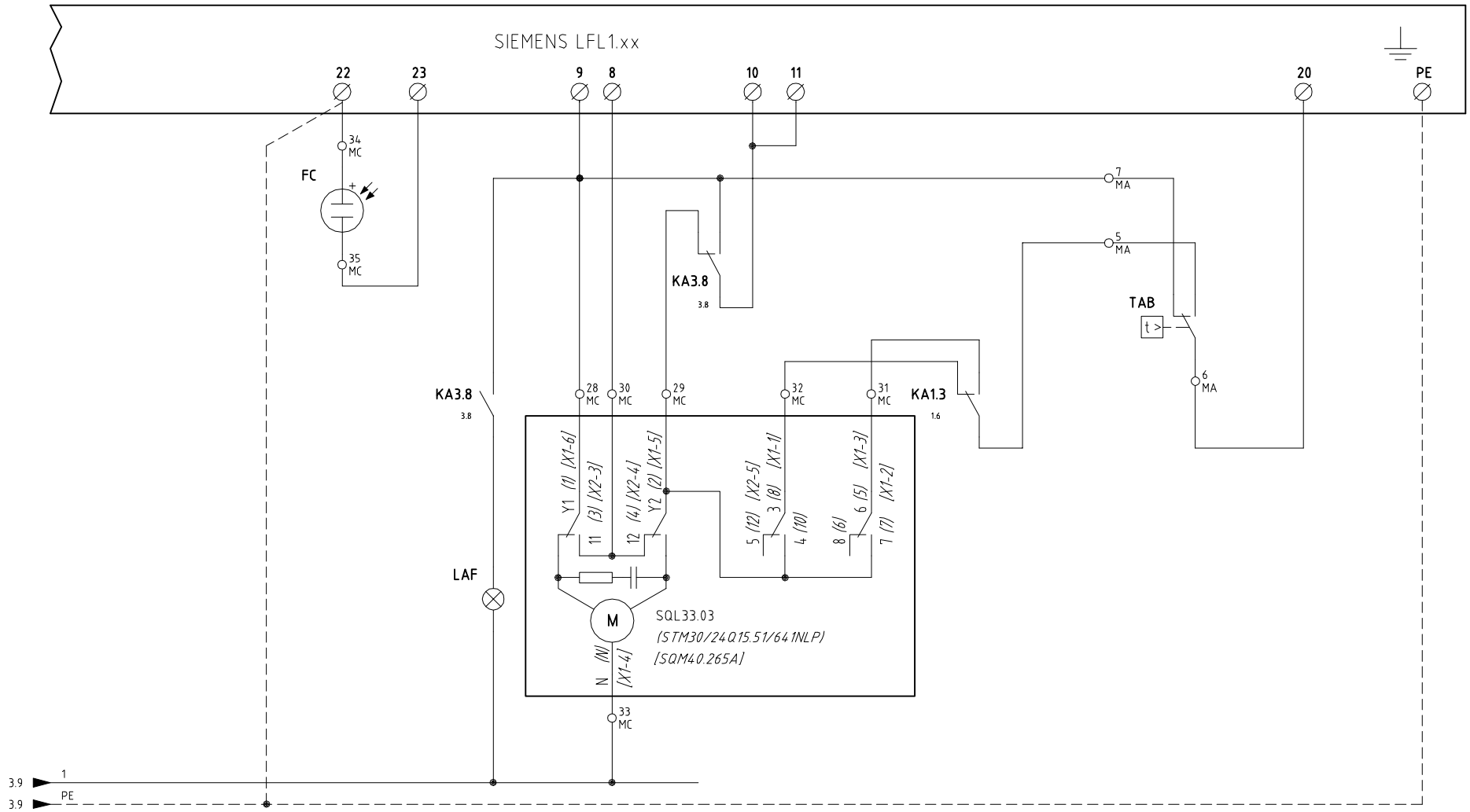


| | | | |
|---|---|---|---|
| Data 12/07/2005 | | PREC. | FOGLIO |
| Revisione 03 | | 3 | 4 |
| Dis. N. 11 – 336 | | SEGUE | TOTALE |
| | | 5 | 6 |

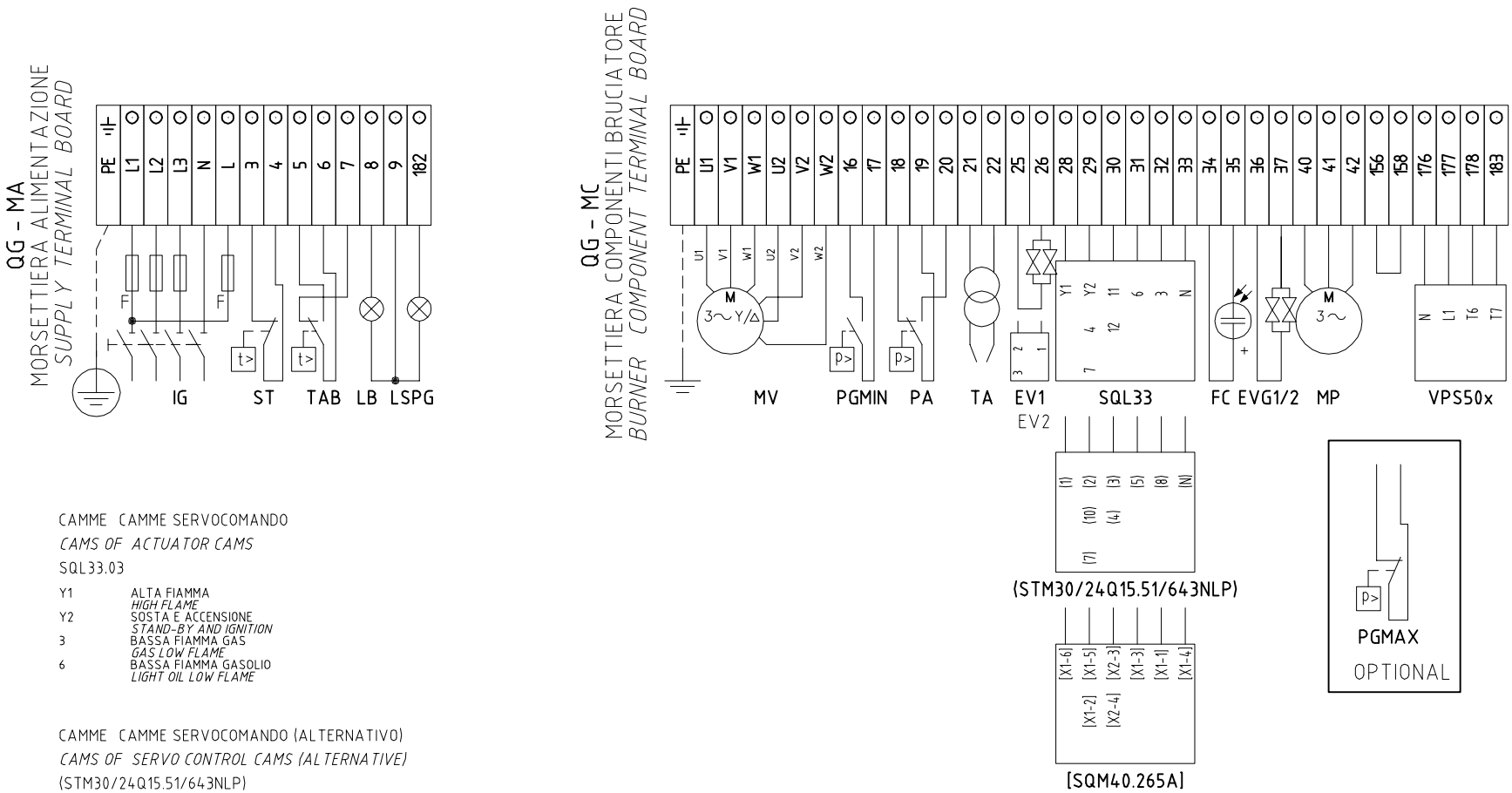


CAMME CAMME SERVOCOMANDO

*CAMS OF ACTUATOR CAMS*

SQL33.03

| | |
|---|---|
| Y1 | ALTA FIAMMA<br>*HIGH FLAME* |
| Y2 | SOSTA E ACCENSIONE<br>*STAND-BY AND IGNITION* |
| 3 | BASSA FIAMMA GAS<br>*GAS LOW FLAME* |
| 6 | BASSA FIAMMA GASOLIO<br>*LIGHT OIL LOW FLAME* |

CAMME CAMME SERVOCOMANDO (ALTERNATIVO)

*CAMS OF SERVO CONTROL CAMS (ALTERNATIVE)*

(STM30/24Q15.51/643NLP)

| | |
|---|---|
| I | ALTA FIAMMA<br>*HIGH FLAME* |
| II | SOSTA E ACCENSIONE<br>*STAND-BY AND IGNITION* |
| III | BASSA FIAMMA GAS<br>*GAS LOW FLAME* |
| V | BASSA FIAMMA GASOLIO<br>*LIGHT OIL LOW FLAME* |

CAMME CAMME SERVOCOMANDO (ALTERNATIVO)

*CAMS OF SERVO CONTROL CAMS (ALTERNATIVE)*

[SQM40.265A]

| | |
|---|---|
| I | ALTA FIAMMA<br>*HIGH FLAME* |
| II | SOSTA E ACCENSIONE<br>*STAND-BY AND IGNITION* |
| III | BASSA FIAMMA GAS<br>*GAS LOW FLAME* |
| IV | BASSA FIAMMA GASOLIO<br>*LIGHT OIL LOW FLAME* |

| | | | |
|---|---|---|---|
| Data | 12/07/2005 | PREC. | FOGLIO |
| Revisione | 03 | 4 | 5 |
| Dis. N. | 11 – 336 | SEGUE | TOTALE |
| | | 6 | 6 |

| 0 | 1 | 2 | 3 | 4 | 5 | 6 | 7 | 8 | 9 |
|---|---|---|---|---|---|---|---|---|---|

| SIGLA/ITEM | FOGLIO/SHEET | FUNZIONE | FUNCTION |
|---|---|---|---|
| (STM30/24Q15.51/641NLP) | 4 | SERVOCOMANDO SERRANDA ARIA (ALTERNATIVO) | AIR DAMPER ACTUATOR (ALTERNATIVE) |
| [SQM40.265A] | 4 | SERVOCOMANDO SERRANDA ARIA (ALTERNATIVO) | AIR DAMPER ACTUATOR (ALTERNATIVE) |
| CM | 1 | COMMUTATORE FUNZIONAMENTO 1)GAS 0)SPENTO 2)GASOLIO | MANUAL OPERATION SWITCH 1)GAS 0)OFF 2)LIGHT OIL |
| EV1 | 3 | ELETTROVALVOLA GAS LATO RETE (O GRUPPO VALVOLE) | UPSTREAM GAS SOLENOID VALVE (OR VALVES GROUP) |
| EV2 | 3 | ELETTROVALVOLA GAS LATO BRUCIATORE (O GRUPPO VALVOLE) | DOWNSTREAM GAS SOLENOID VALVE (OR VALVES GROUP) |
| EVG1/2 | 3 | ELETTROVALVOLE GASOLIO | LIGHT OIL ELECTRO VALVE |
| FC | 4 | SONDA UV RILEVAZIONE FIAMMA | UV FLAME DETECTOR |
| FU1 | 1 | FUSIBILI DI LINEA | LINE FUSES |
| FU2 | 1 | FUSIBILE DI LINEA | LINE FUSE |
| FU3 | 1 | FUSIBILI LINEA POMPA | PUMP LINE FUSES |
| IG | 1 | INTERRUTTORE GENERALE | MAINS SWITCH |
| KA1.3 | 1 | RELE' AUSILIARIO | AUXILIARY RELAY |
| KA3.8 | 3 | RELE' AUSILIARIO | AUXILIARY RELAY |
| KM2.5 | 2 | CONTATTORE MOTORE VENTILATORE (LINEA) | FAN MOTOR CONTACTOR (LINE) |
| KM2.5S | 2 | CONTATTORE MOTORE VENTILATORE (STELLA) | FAN MOTOR CONTACTOR (STAR) |
| KM2.5T | 2 | CONTATTORE MOTORE VENTILATORE (TRIANGOLO) | FAN MOTOR CONTACTOR (DELTA) |
| KM3.1 | 3 | CONTATTORE MOTORE POMPA GASOLIO | LIGHT OIL PUMP MOTOR CONTACTOR |
| KT2.6 | 2 | TEMPORIZZATORE STELLA/TRIANGOLO | STAR/DELTA DELAYED RELAY |
| LAF | 4 | LAMPADA SEGNALAZIONE ALTA FIAMMA BRUCIATORE | BURNER IN HIGH FLAME INDICATOR LIGHT |
| LB | 2 | LAMPADA SEGNALAZIONE BLOCCO BRUCIATORE | INDICATOR LIGHT FOR BURNER LOCK-OUT |
| LBF | 3 | LAMPADA SEGNALAZIONE BASSA FIAMMA BRUCIATORE | BURNER IN LOW FLAME INDICATOR LIGHT |
| LEV1 | 3 | LAMPADA SEGNALAZIONE APERTURA [EV1] | INDICATOR LIGHT FOR OPENING OF ELECTRO-VALVE [EV1] |
| LEV2 | 3 | LAMPADA SEGNALAZIONE APERTURA [EV2] | INDICATOR LIGHT FOR OPENING OF ELECTRO-VALVE [EV2] |
| LEVG | 3 | LAMPADA SEGNALAZIONE APERTURA [EVG] | INDICATOR LIGHT FOR OPENING OF ELECTRO-VALVE [EVG] |
| LPGMIN | 3 | LAMPADA SEGNALAZIONE PRESENZA GAS IN RETE | INDICATOR LIGHT FOR PRESENCE OF GAS IN THE NETWORK |
| LS | 2 | LAMPADA SEGNALAZIONE SOSTA BRUCIATORE | INDICATOR LIGHT FOR BURNER STAND-BY |
| LSPG | 3 | LAMPADA SEGNALAZIONE BLOCCO CONTROLLO TENUTA VALVOLE | INDICATOR LIGHT FOR LEAKAGE OF VALVES |
| LT | 2 | LAMPADA SEGNALAZIONE BLOCCO TERMICO MOTORE VENTILATORE | INDICATOR LIGHT FOR FAN OVERLOAD TRIPPED |
| LTA | 2 | LAMPADA SEGNALAZIONE TRASFORMATORE DI ACCENSIONE | IGNITION TRANSFORMER INDICATOR LIGHT |
| LTP | 2 | LAMPADA SEGNALAZIONE BLOCCO TERMICO POMPA | INDICATOR LIGHT FOR PUMP OVERLOAD TRIPPED |
| MP | 1 | MOTORE POMPA GASOLIO | LIGHT OIL PUMP MOTOR |
| MV | 1 | MOTORE VENTILATORE | FAN MOTOR |
| PA | 2 | PRESSOSTATO ARIA | AIR PRESSURE SWITCH |
| PGMAX | 3 | PRESSOSTATO GAS DI MASSIMA PRESSIONE (OPTIONAL) | MAXIMUM PRESSURE GAS SWITCH (OPTIONAL) |
| PGMIN | 3 | PRESSOSTATO GAS DI MINIMA PRESSIONE | MINIMUM GAS PRESSURE SWITCH |
| PS | 2 | PULSANTE SBLOCCO FIAMMA | LOCK-OUT RESET BUTTON |
| SIEMENS LFL1.xx | 2 | APPARECCHIATURA CONTROLLO FIAMMA | CONTROL BOX |
| SQL33.03 | 4 | SERVOCOMANDO SERRANDA ARIA | AIR DAMPER ACTUATOR |
| ST | 2 | SERIE TERMOSTATI/PRESSOSTATI | SERIES OF THERMOSTATS OR PRESSURE SWITCHES |
| TA | 2 | TRASFORMATORE DI ACCENSIONE | IGNITION TRANSFORMER |
| TAB | 4 | TERMOSTATO/PRESSOSTATO ALTA-BASSA FIAMMA | HIGH-LOW THERMOSTAT/PRESSURE SWITCHES |
| TP | 1 | TERMICO MOTORE POMPA | PUMP MOTOR THERMAL |
| TV | 1 | TERMICO MOTORE VENTILATORE | FAN MOTOR THERMAL |
| VPS50x | 3 | CONTROLLO DI TENUTA VALVOLE GAS | GAS PROVING SYSTEM |

| | | | |
|---|---|---|---|
| Data 12/07/2005 | | PREC. | FOGLIO |
| Revisione 03 | | 5 | 6 |
| Dis. N. 11 – 336 | | SEGUE | TOTALE |
| | | / | 6 |

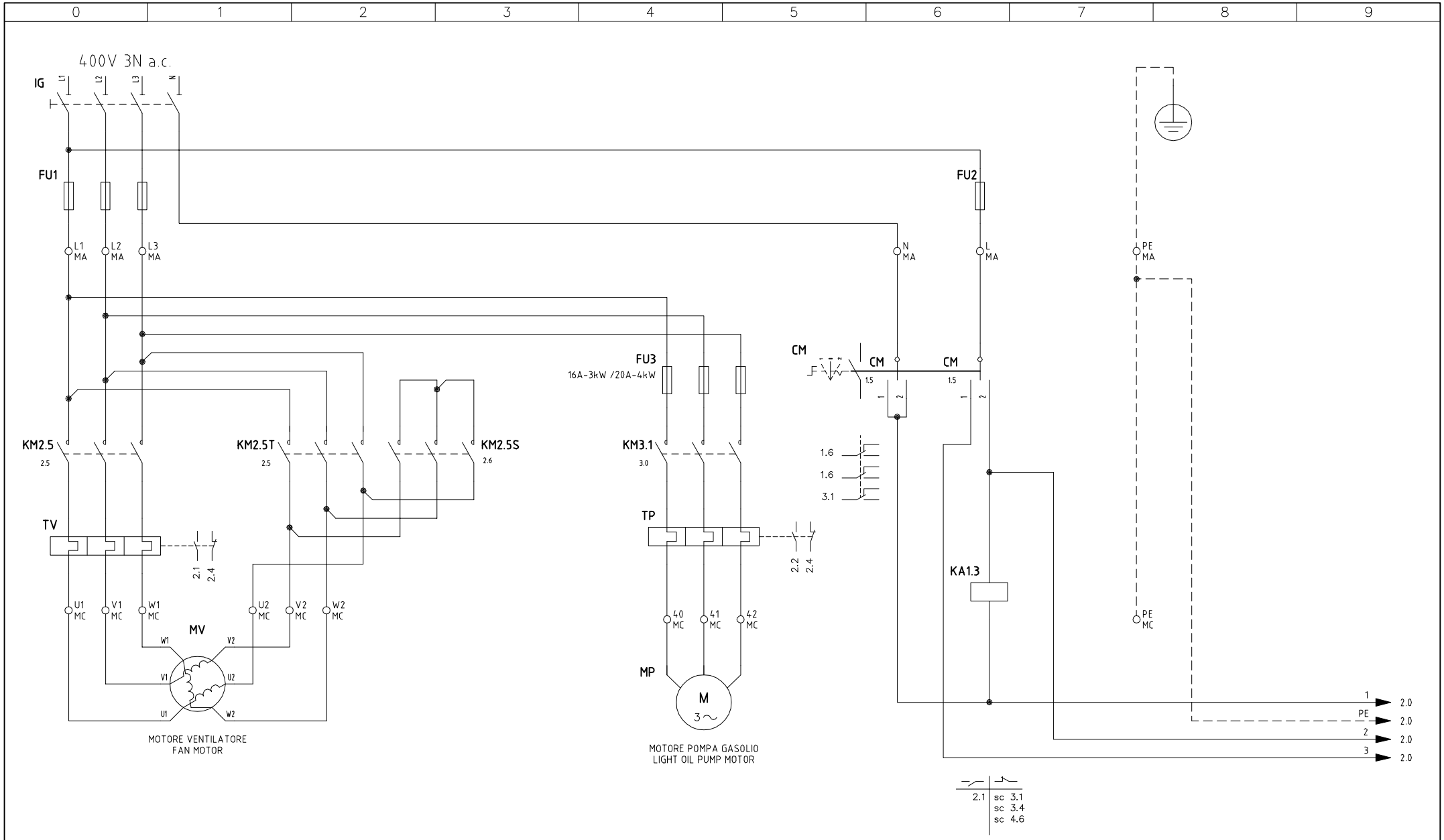


| | | | |
|---|---|---|---|
| Data 06/03/2006 | | PREC. | FOGLIO |
| Revisione 03 | | 8 | 1 |
| Dis. N. 11 – 339 | | SEGUE | TOTALE |
| | | 2 | 8 |

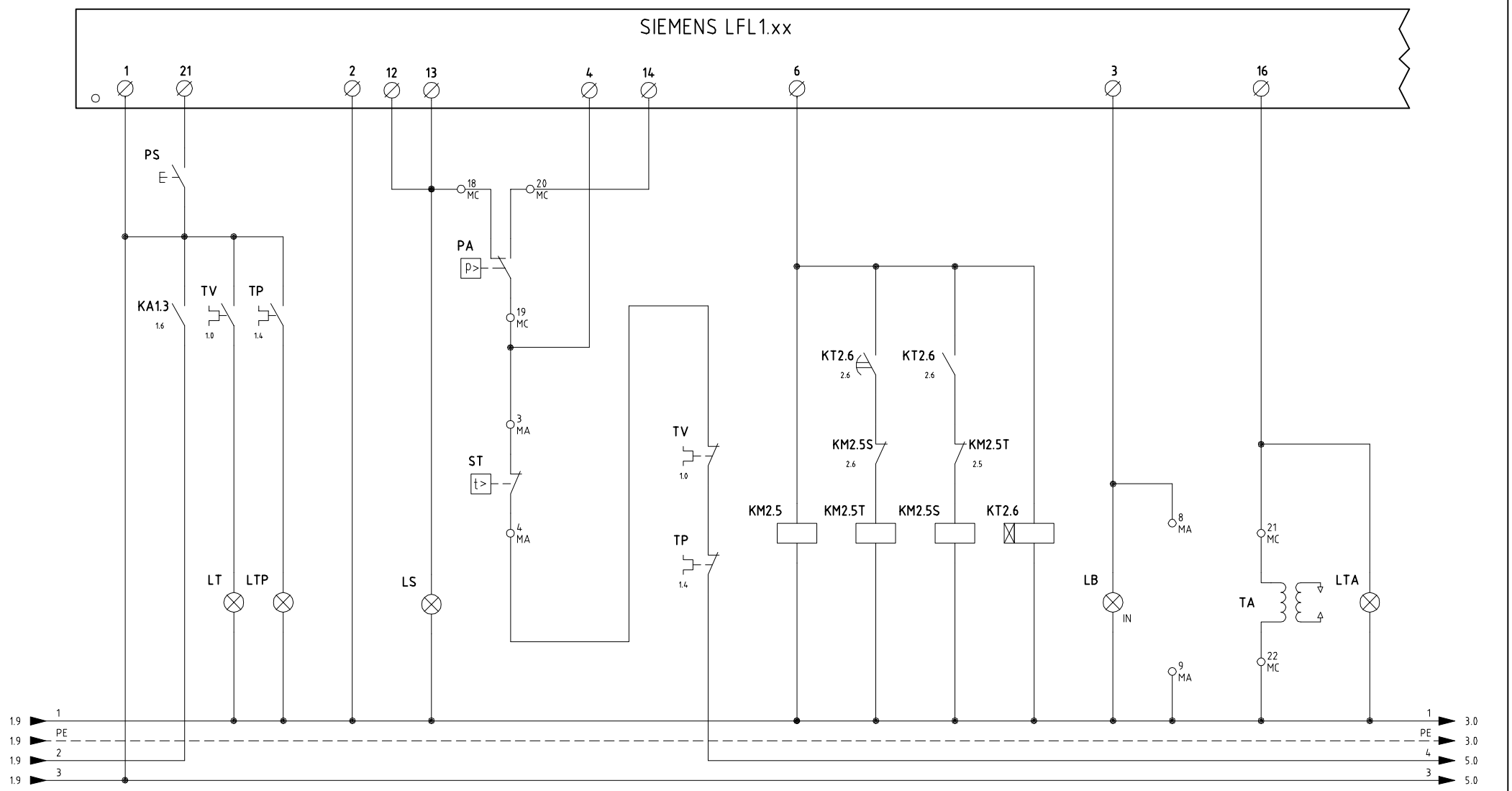


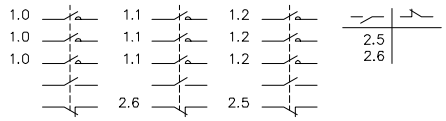


| | | | |
|---|---|---|---|
| Data 06/03/2006 | | PREC. | FOGLIO |
| Revisione 03 | | 1 | 2 |
| Dis. N. 11 – 339 | | SEGUE | TOTALE |
| | | 3 | 8 |

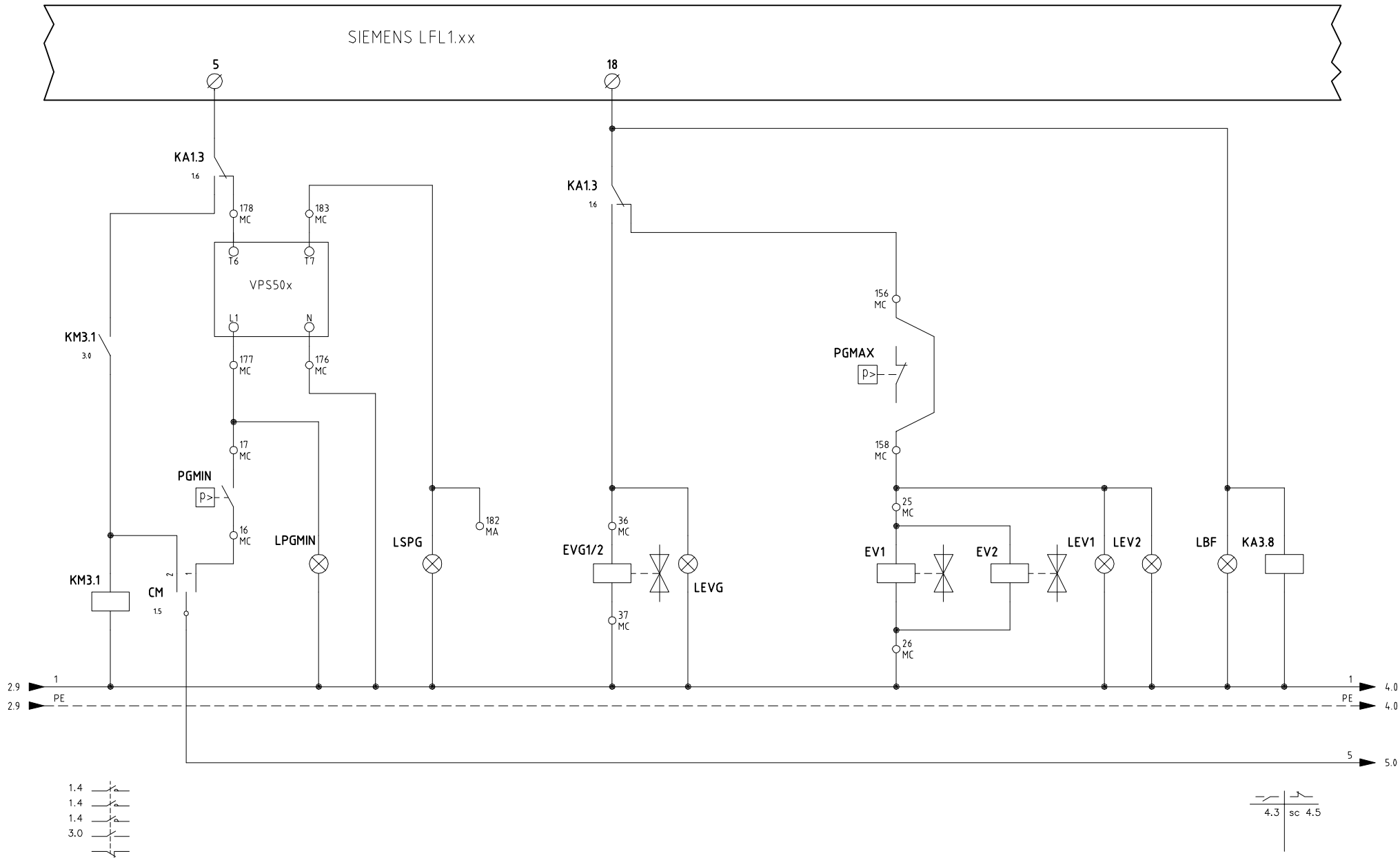


| | | | |
|---|---|---|---|
| Data 06/03/2006 | | PREC. | FOGLIO |
| Revisione 03 | | 2 | 3 |
| Dis. N. 11 – 339 | | SEGUE | TOTALE |
| | | 4 | 8 |

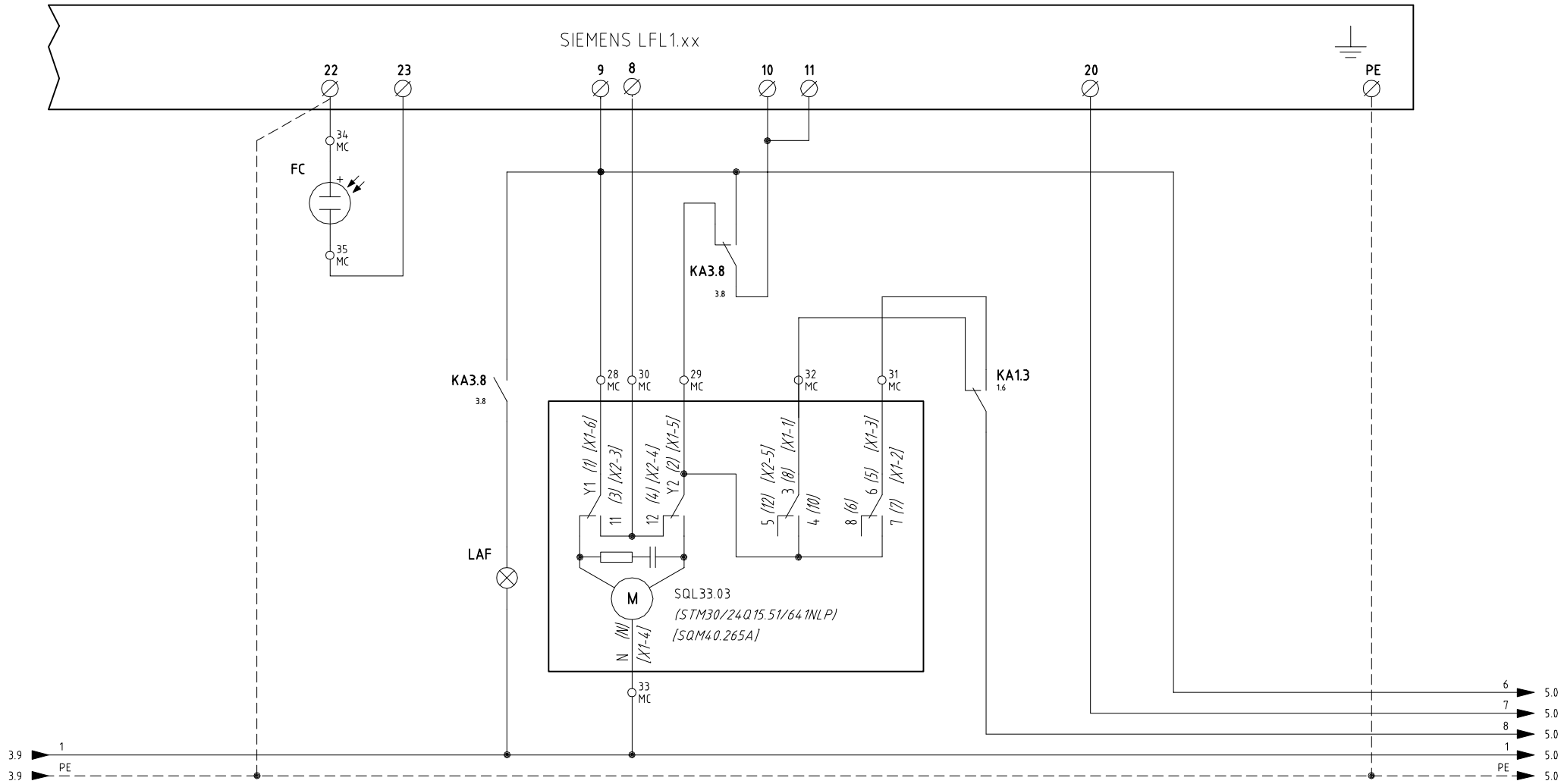


| | | | |
|---|---|---|---|
| Data 06/03/2006 | | PREC. | FOGLIO |
| Revisione 03 | | 3 | 4 |
| Dis. N. 11 – 339 | | SEGUE | TOTALE |
| | | 5 | 8 |

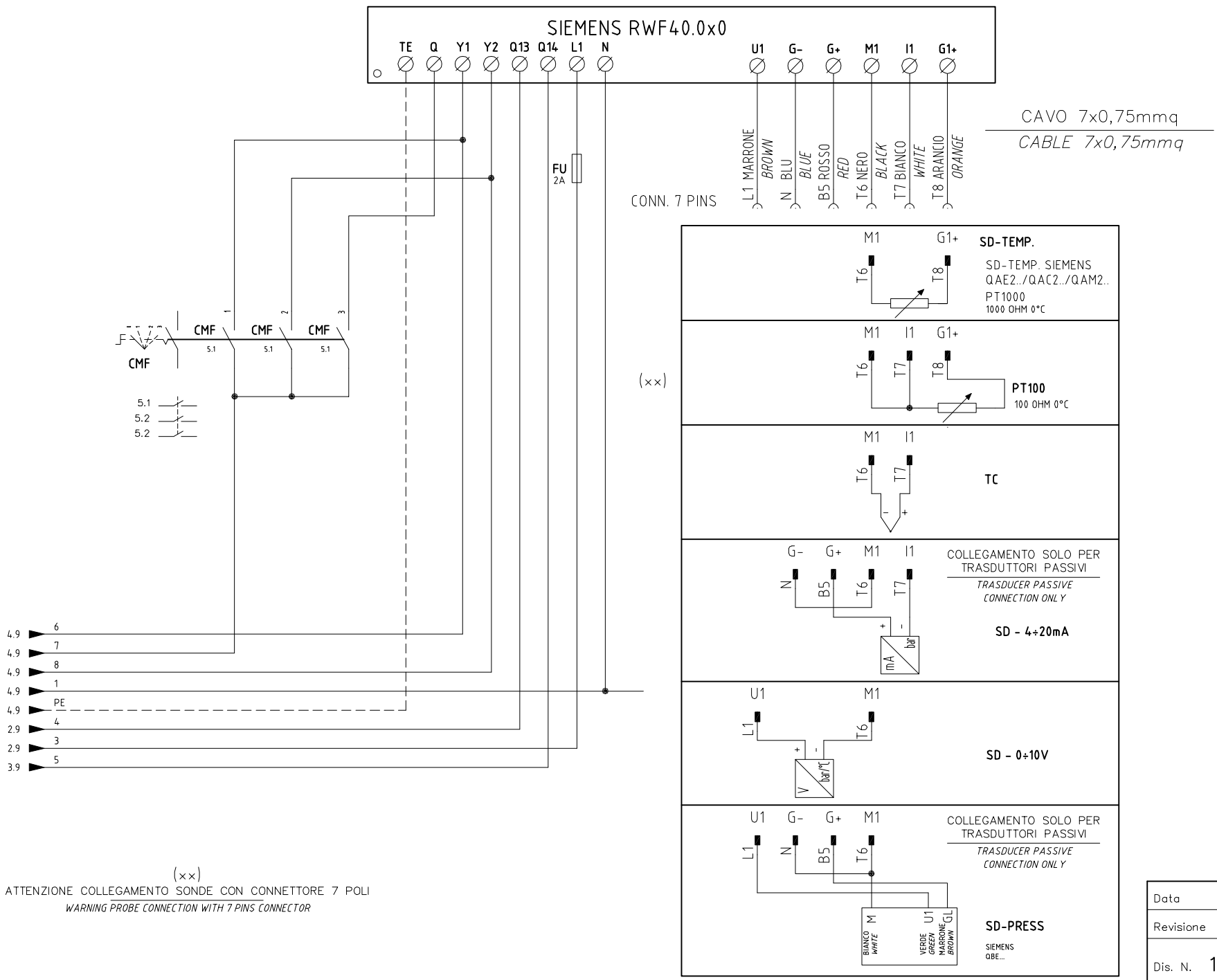


(××)
ATTENZIONE COLLEGAMENTO SONDE CON CONNETTORE 7 POLI
*WARNING PROBE CONNECTION WITH 7 PINS CONNECTOR*

| | | | |
|---|---|---|---|
| Data 06/03/2006 | PREC. | FOGLIO |
| Revisione 03 | 4 | 5 |
| Dis. N. 11 – 339 | SEGUE 6 | TOTALE 8 |

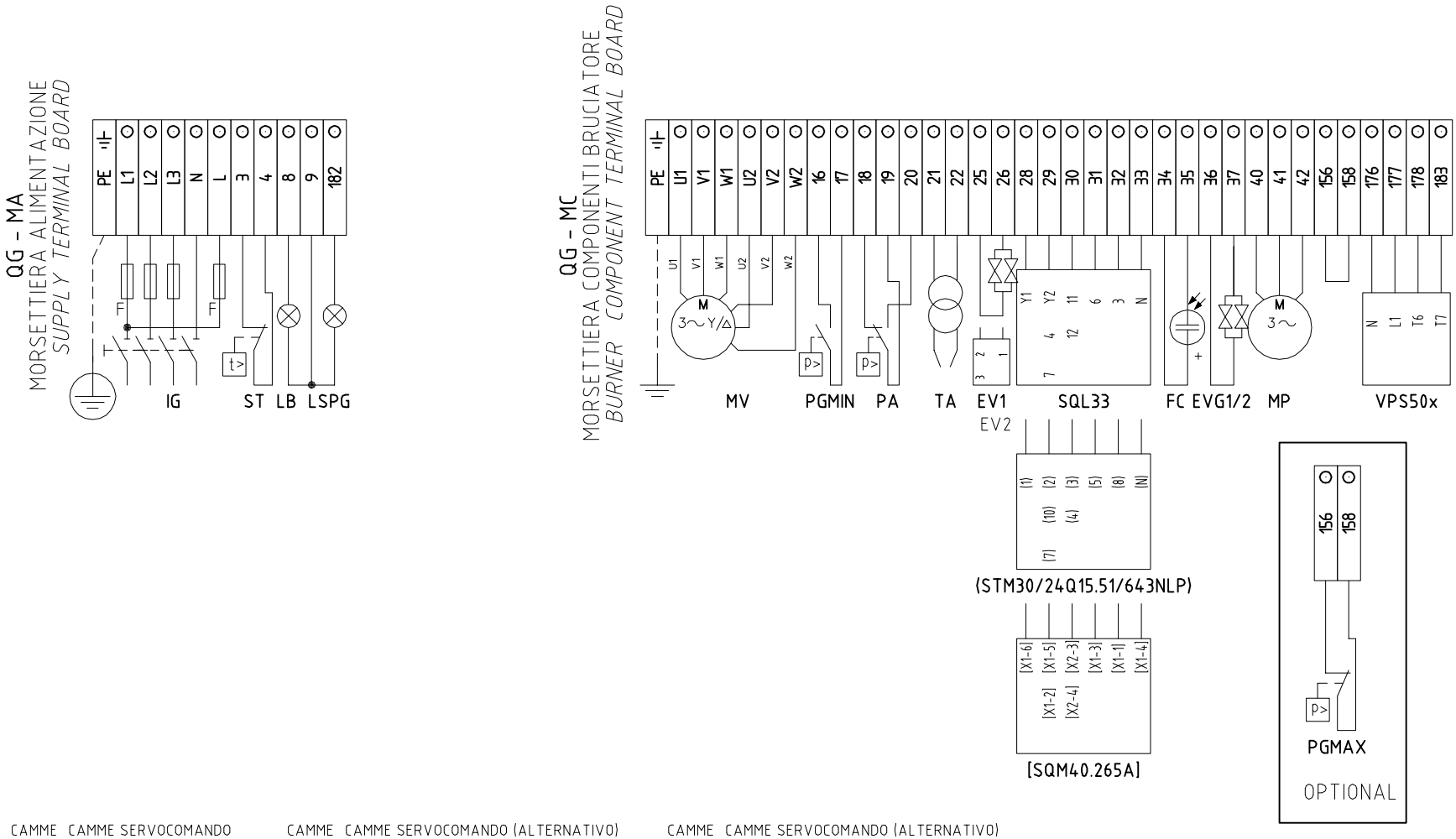


CAMME CAMME SERVOCOMANDO
*CAMS OF ACTUATOR CAMS*
SQL33.03

| | |
|---|---|
| Y1 | ALTA FIAMMA<br>*HIGH FLAME* |
| Y2 | SOSTA E ACCENSIONE<br>*STAND-BY AND IGNITION* |
| 3 | BASSA FIAMMA GAS<br>*GAS LOW FLAME* |
| 6 | BASSA FIAMMA GASOLIO<br>*LIGHT OIL LOW FLAME* |

CAMME CAMME SERVOCOMANDO (ALTERNATIVO)
*CAMS OF SERVO CONTROL CAMS (ALTERNATIVE)*
(STM30/24Q15.51/643NLP)

| | |
|---|---|
| I | ALTA FIAMMA<br>*HIGH FLAME* |
| II | SOSTA E ACCENSIONE<br>*STAND-BY AND IGNITION* |
| III | BASSA FIAMMA GAS<br>*GAS LOW FLAME* |
| V | BASSA FIAMMA GASOLIO<br>*LIGHT OIL LOW FLAME* |

CAMME CAMME SERVOCOMANDO (ALTERNATIVO)
*CAMS OF SERVO CONTROL CAMS (ALTERNATIVE)*
[SQM40.265A]

| | |
|---|---|
| I | ALTA FIAMMA<br>*HIGH FLAME* |
| II | SOSTA E ACCENSIONE<br>*STAND-BY AND IGNITION* |
| III | BASSA FIAMMA GAS<br>*GAS LOW FLAME* |
| IV | BASSA FIAMMA GASOLIO<br>*LIGHT OIL LOW FLAME* |

| | | | |
|---|---|---|---|
| Data 06/03/2006 | | PREC. | FOGLIO |
| Revisione 03 | | 5 | 6 |
| Dis. N. 11 – 339 | | SEGUE | TOTALE |
| | | 7 | 8 |

| 0 | 1 | 2 | 3 | 4 | 5 | 6 | 7 | 8 | 9 |
|---|---|---|---|---|---|---|---|---|---|

| SIGLA/ITEM | FOGLIO/SHEET | FUNZIONE | FUNCTION |
|---|---|---|---|
| (STM30/24Q15.51/641NLP) | 4 | SERVOCOMANDO SERRANDA ARIA (ALTERNATIVO) | AIR DAMPER ACTUATOR (ALTERNATIVE) |
| [SQM40.265A] | 4 | SERVOCOMANDO SERRANDA ARIA (ALTERNATIVO) | AIR DAMPER ACTUATOR (ALTERNATIVE) |
| CM | 1 | COMMUTATORE FUNZIONAMENTO 1)GAS 0)SPENTO 2)GASOLIO | MANUAL OPERATION SWITCH 1)GAS 0)OFF 2)LIGHT OIL |
| CMF | 5 | COMMUT. MANUALE FUNZ. 0)FERMO 1)ALTA FIAMMA 2)BASSA FIAMMA 3)AUTOMATICO | MANUAL SWITCH 0)OFF 1)HIGH FLAME 2)LOW FLAME 3)AUTOMATIC |
| EV1 | 3 | ELETTROVALVOLA GAS LATO RETE (O GRUPPO VALVOLE) | UPSTREAM GAS SOLENOID VALVE (OR VALVES GROUP) |
| EV2 | 3 | ELETTROVALVOLA GAS LATO BRUCIATORE (O GRUPPO VALVOLE) | DOWNSTREAM GAS SOLENOID VALVE (OR VALVES GROUP) |
| EVG1/2 | 3 | ELETTROVALVOLE GASOLIO | LIGHT OIL ELECTRO VALVE |
| FC | 4 | SONDA UV RILEVAZIONE FIAMMA | UV FLAME DETECTOR |
| FU | 5 | FUSIBILE | FUSE |
| FU1 | 1 | FUSIBILI DI LINEA | LINE FUSES |
| FU2 | 1 | FUSIBILE DI LINEA | LINE FUSE |
| FU3 | 1 | FUSIBILI LINEA POMPA | PUMP LINE FUSES |
| IG | 1 | INTERRUTTORE GENERALE | MAINS SWITCH |
| KA1.3 | 1 | RELE' AUSILIARIO | AUXILIARY RELAY |
| KA3.8 | 3 | RELE' AUSILIARIO | AUXILIARY RELAY |
| KM2.5 | 2 | CONTATTORE MOTORE VENTILATORE (LINEA) | FAN MOTOR CONTACTOR (LINE) |
| KM2.5S | 2 | CONTATTORE MOTORE VENTILATORE (STELLA) | FAN MOTOR CONTACTOR (STAR) |
| KM2.5T | 2 | CONTATTORE MOTORE VENTILATORE (TRIANGOLO) | FAN MOTOR CONTACTOR (DELTA) |
| KM3.1 | 3 | CONTATTORE MOTORE POMPA GASOLIO | LIGHT OIL PUMP MOTOR CONTACTOR |
| KT2.6 | 2 | TEMPORIZZATORE STELLA/TRIANGOLO | STAR/DELTA DELAYED RELAY |
| LAF | 4 | LAMPADA SEGNALAZIONE ALTA FIAMMA BRUCIATORE | BURNER IN HIGH FLAME INDICATOR LIGHT |
| LB | 2 | LAMPADA SEGNALAZIONE BLOCCO BRUCIATORE | INDICATOR LIGHT FOR BURNER LOCK-OUT |
| LBF | 3 | LAMPADA SEGNALAZIONE BASSA FIAMMA BRUCIATORE | BURNER IN LOW FLAME INDICATOR LIGHT |
| LEV1 | 3 | LAMPADA SEGNALAZIONE APERTURA [EV1] | INDICATOR LIGHT FOR OPENING OF ELECTRO-VALVE [EV1] |
| LEV2 | 3 | LAMPADA SEGNALAZIONE APERTURA [EV2] | INDICATOR LIGHT FOR OPENING OF ELECTRO-VALVE [EV2] |
| LEVG | 3 | LAMPADA SEGNALAZIONE APERTURA [EVG] | INDICATOR LIGHT FOR OPENING OF ELECTRO-VALVE [EVG] |
| LPGMIN | 3 | LAMPADA SEGNALAZIONE PRESENZA GAS IN RETE | INDICATOR LIGHT FOR PRESENCE OF GAS IN THE NETWORK |
| LS | 2 | LAMPADA SEGNALAZIONE SOSTA BRUCIATORE | INDICATOR LIGHT FOR BURNER STAND-BY |
| LSPG | 3 | LAMPADA SEGNALAZIONE BLOCCO CONTROLLO TENUTA VALVOLE | INDICATOR LIGHT FOR LEAKAGE OF VALVES |
| LT | 2 | LAMPADA SEGNALAZIONE BLOCCO TERMICO MOTORE VENTILATORE | INDICATOR LIGHT FOR FAN OVERLOAD TRIPPED |
| LTA | 2 | LAMPADA SEGNALAZIONE TRASFORMATORE DI ACCENSIONE | IGNITION TRANSFORMER INDICATOR LIGHT |
| LTP | 2 | LAMPADA SEGNALAZIONE BLOCCO TERMICO POMPA | INDICATOR LIGHT FOR PUMP OVERLOAD TRIPPED |

| 0 | 1 | 2 | 3 | 4 | 5 | 6 | 7 | 8 | 9 |
|---|---|---|---|---|---|---|---|---|---|

| SIGLA/ITEM | FOGLIO/SHEET | FUNZIONE | FUNCTION |
|---|---|---|---|
| MP | 1 | MOTORE POMPA GASOLIO | LIGHT OIL PUMP MOTOR |
| MV | 1 | MOTORE VENTILATORE | FAN MOTOR |
| PA | 2 | PRESSOSTATO ARIA | AIR PRESSURE SWITCH |
| PGMAX | 3 | PRESSOSTATO GAS DI MASSIMA PRESSIONE (OPTIONAL) | MAXIMUM PRESSURE GAS SWITCH (OPTIONAL) |
| PGMIN | 3 | PRESSOSTATO GAS DI MINIMA PRESSIONE | MINIMUM GAS PRESSURE SWITCH |
| PS | 2 | PULSANTE SBLOCCO FIAMMA | LOCK-OUT RESET BUTTON |
| PT100 | 5 | SONDA DI TEMPERATURA | TEMPERATURE PROBE |
| SD-PRESS | 5 | SONDA DI PRESSIONE | PRESSURE PROBE |
| SD-TEMP. | 5 | SONDA DI TEMPERATURA | TEMPERATURE PROBE |
| SD - 0÷10V | 5 | TRASDUTTORE USCITA IN CORRENTE | TRANSDUCER CURRENT OUTPUT |
| SD - 4÷20mA | 5 | TRASDUTTORE USCITA IN CORRENTE | TRANSDUCER CURRENT OUTPUT |
| SIEMENS LFL1.xx | 2 | APPARECCHIATURA CONTROLLO FIAMMA | CONTROL BOX |
| SIEMENS RWF40.0x0 | 5 | REGOLATORE MODULANTE | BURNER MODULATOR |
| SQL33.03 | 4 | SERVOCOMANDO SERRANDA ARIA | AIR DAMPER ACTUATOR |
| ST | 2 | SERIE TERMOSTATI/PRESSOSTATI | SERIES OF THERMOSTATS OR PRESSURE SWITCHES |
| TA | 2 | TRASFORMATORE DI ACCENSIONE | IGNITION TRANSFORMER |
| TC | 5 | TERMOCOPPIA | THERMOCOUPLE |
| TP | 1 | TERMICO MOTORE POMPA | PUMP MOTOR THERMAL |
| TV | 1 | TERMICO MOTORE VENTILATORE | FAN MOTOR THERMAL |
| VPS50x | 3 | CONTROLLO DI TENUTA VALVOLE GAS | GAS PROVING SYSTEM |

C.I.B. UNIGAS S.p.A.
Via L.Galvani, 9 - 35011 Campodarsego (PD) - ITALY
Tel. +39 049 9200944 - Fax +39 049 9200945/9201269
web site: www.cibunigas.it - e-mail: cibunigas@cibunigas.it

# CIB UNIGAS 600V

CONTROLLER

## USER'S MANUAL

COD. M12925CA Rel 1.2 08/2014

SOFTWARE VERSION **1.0x T73**
code **80379** / Edition **01 - 06/2012**

## 1 • INSTALLATION

### • Dimensions and cut-out; panel mounting

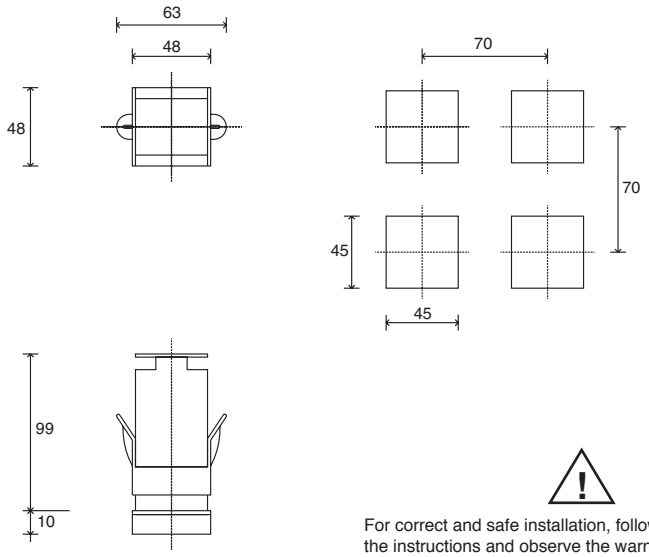


For correct and safe installation, follow the instructions and observe the warnings contained in this manual.

***Panel mounting:***
To fix the unit, insert the brackets provided into the seats on either side of the case.
To mount two or more units side by side, respect the cut-out dimensions shown in the drawing.

***CE MARKING:*** The instrument conforms to the European Directives 2004/108/CE and 2006/95/CE with reference to the generic standards: **EN 61000-6-2** (immunity in industrial environment) **EN 61000-6-3** (emission in residential environment) **EN 61010-1** (safety).
***MAINTENANCE:*** Repairs must be done only by trained and specialized personnel.
Cut power to the device before accessing internal parts.
Do not clean the case with hydrocarbon-based solvents (Petrol, Trichlorethylene, etc.). Use of these solvents can reduce the mechanical reliability of the device. Use a cloth dampened in ethyl alcohol or water to clean the external plastic case.
***SERVICE:*** GEFRAN has a service department. The warranty excludes defects caused by any use not conforming to these instructions.

EMC conformity has been tested with the following connections

| FUNCTION | CABLE TYPE | LENGTH |
|---|---|---|
| Power supply cable | 1 mm² | 1 m |
| Relay output cable | 1 mm² | 3,5 m |
| TC input | 0,8 mm² compensated | 5 m |
| Pt100 input | 1 mm² | 3 m |

## 2 • TECHNICAL SPECIFICATIONS

| | |
|---|---|
| *Display* | 2x4 digit green, high display 10 and 7mm |
| *Keys* | 4 of mechanical type (Man/Aut, INC, DEC, F) |
| *Accuracy* | 0.2% f.s. ±1 digit ambient temperature 25°C |
| *Main input (settable digital filter)* | TC, RTD, PTC, NTC<br>60mV,1V Ri≥1MΩ; 5V,10V Ri≥10KΩ; 20mA Ri=50Ω<br>Tempo di campionamento 120 msec. |
| *Type TC Thermocouples* (ITS90) | Type TC Thermocouples : J,K,R,S,T (IEC 584-1, CEI EN 60584-1, 60584-2) ; custom linearization is available / types B,E,N,L GOST,U,G,D,C are available by using the custom linearization. |
| *Cold junction error* | 0,1° / °C |
| *RTD type (scale configurable within indicated range, with or without decimal point)* (ITS90)<br>*Max line resistance for RTD* | DIN 43760 (Pt100), JPT100<br>20Ω |
| *PTC type / NTC Type* | 990Ω, 25°C / 1KΩ, 25°C |
| *Safety* | detection of short-circuit or opening of probes, LBA alarm |
| *°C / °F selection* | configurable from faceplate |
| *Linear scale ranges* | -1999 to 9999 with configurable decimal point position |
| *Controls* | PID, Self-tuning, on-off |
| *pb - dt - it* | 0,0...999,9 % - 0,00...99,99 min - 0,00...99,99 min |
| *Action* | Heat / Cool |
| *Control outputs* | on / off |
| *Maximum power limit heat / cool* | 0,0...100,0 % |
| *Cycle time* | 0...200 sec |
| *Main output type* | relay, logic, continuous (0...10V Rload ≥ 250KΩ, 0/4...20mA Rload ≤ 500Ω) |
| *Softstart* | 0,0...500,0 min |
| *Fault power setting* | -100,0...100,0 % |
| *Automatic blanking* | Displays PV value, optional exclusion |
| *Configurable alarms* | Up to 3 alarm functions assignable to an output, configurable as: maximum, minimum, symmetrical, absolute/deviation, LBA |
| *Alarm masking* | - exclusion during warm up<br>- latching reset from faceplate or external contact |
| *Type of relay contact* | NO (NC), 5A, 250V/30Vdc cosφ=1 |
| *Logic output for static relays* | 24V ±10% (10V min at 20mA) |
| *Transmitter power supply* | 15/24Vdc, max 30mA short-circuit protection |
| *Power supply (switching type)* | (std) 100 ... 240Vac ±10%<br>(opt.) 11...27Vac/dc ±10%;<br>50/60Hz, 8VA max |
| *Faceplate protection* | IP65 |
| *Working / Storage temperature range* | 0...50°C / -20...70°C |
| *Relative humidity* | 20 ... 85% non-condensing |
| *Environmental conditions of use* | for internal use only, altitude up to 2000m |
| *Installation* | Panel, plug-in from front |
| *Weight* | 160g for the complete version |

# 3 • DESCRIPTION OF FACEPLATE

*Function indicators*
Indicates modes of operation

L1 MAN/AUTO = OFF (automatic control)
ON (manual control)

L2 PRE-HEATING = ON (running)

L3 SELFTUNING = ON (enabled Self)
OFF (disabled Self)

*Automatic/Manual adjustment selection*
Active only when PV display visualises the process variable (button pressed for at least 5 sec.)

*Indication of output states*
OUT 1 (AL1); OUT 2 (OPEN); OUT 3 (CLOSED)

*PV Display*: Indication of process variable
Error Indication: LO, HI, Sbr, Err
***LO***= the value of process variable is < di LO_S
***HI***= the value of process variable is > di HI_S
***Sbr***= faulty sensor or input values higher than max. limits
***Err***= PT100 third wire opened for PT100, PTC or input values lower than min. limits (i.e.: TC wrong connection)

*SV display*: Indication of setpoint

*Function key*
Gives access to the various configuration phases •• Confirms change of set parameters and browses next or previous parameter (if Auto/Man key is pressed)

*"Inc" and "Dec" key*
Press to increment (decrement) any numerical parameter •• Increment (decrement) speed is proportional to time key stays pressed •• The operation is not cyclic: once the maximum (minimum) value of a field is reached, the value will not change even if the key remains pressed.

# 4 • CONNECTIONS

## • Outputs

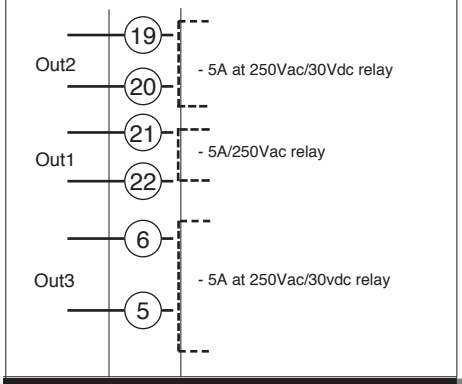


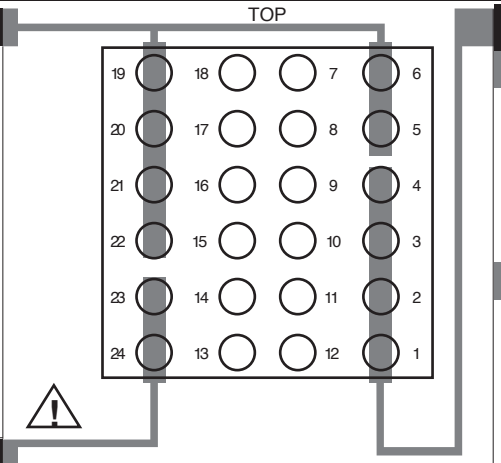


## • Power Supply

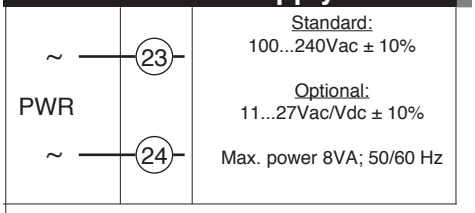


## • Inputs

### • TC Input

Available thermocouples:
J, K, R, S, T
(B, E, N, L, U, G, D, C custom linearization is available)
- Observe polarities
- For extensions, use the correct compensating cable for the type of TC used

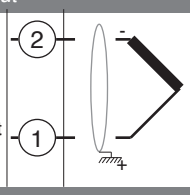


### • Linear input with 3-wire transmitter

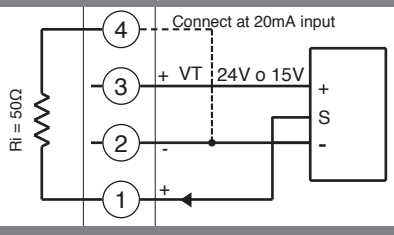


### • Linear input (I)

Linear input in dc current
20mA, Ri = 50Ω

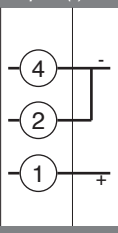


### • Input 1 linear with transmitter 2 wires

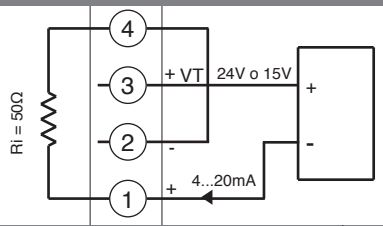


### • Linear input (V)

Linear input in dc voltage
60mV, 1V
Ri > 1MΩ
5V, 10V
Ri > 10KΩ

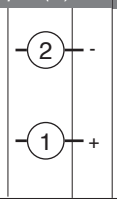


### • Pt100 / PTC / NTC

Use wires of adequate diameter (min. 1mm²)
PT100, JPT100, PTC, NTC

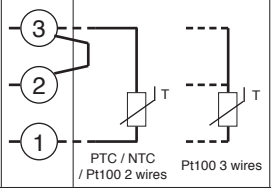


### • Identification of boards

Power board - Solder side

Select transmitter voltage

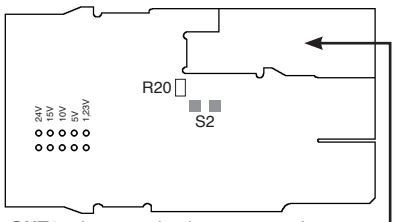


**N.B**. : you can keep the **OUT1** relay energized at power-up by inserting jumper **S2** and removing resistance **R20**.

CPU board - Component side

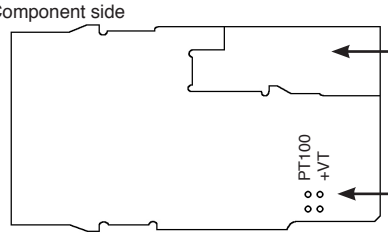


IN/OUT boards
(see appendix)

Select signal at contact 3

### • Device structure

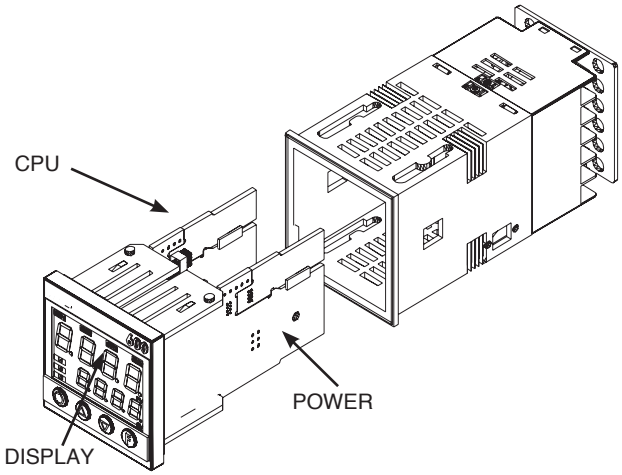

# 5 • "EASY" PROGRAMMING and CONFIGURATION

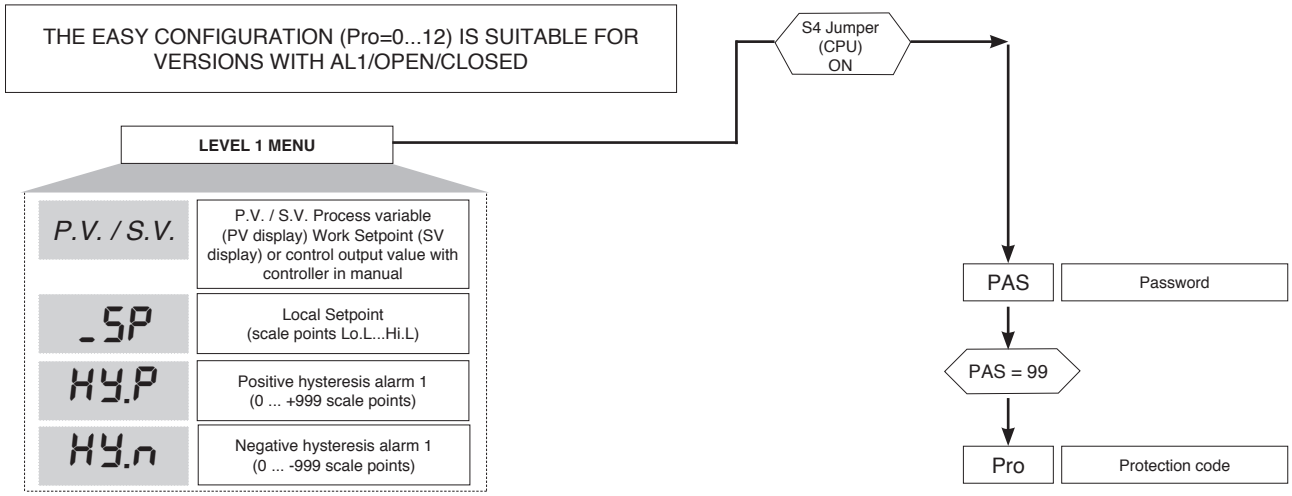


## • Prot

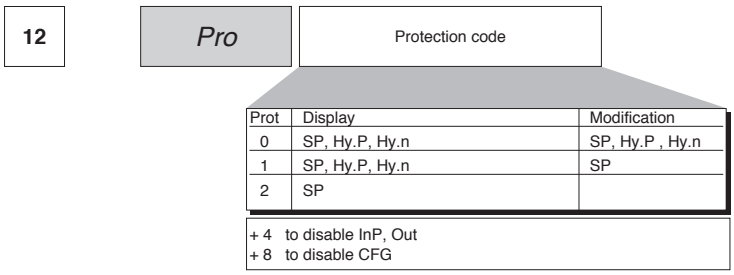


| Prot | Display | Modification |
|---|---|---|
| 0 | SP, Hy.P, Hy.n | SP, Hy.P , Hy.n |
| 1 | SP, Hy.P, Hy.n | SP |
| 2 | SP | |

# 6 • PROGRAMMING and CONFIGURATION

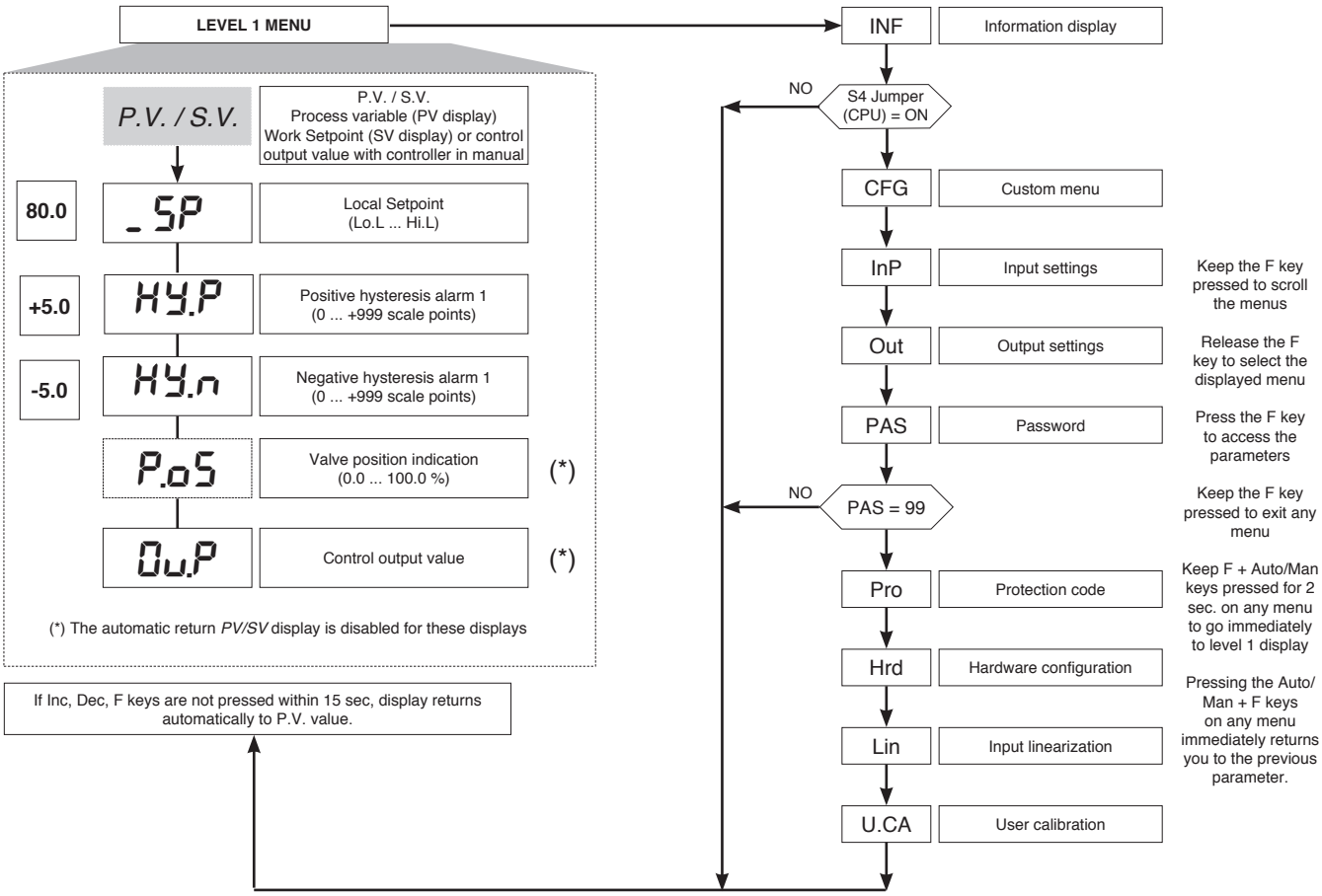


**N.B.: Once a particular configuration is entered, all unnecessary parameters are no longer displayed**

## • InFo Display

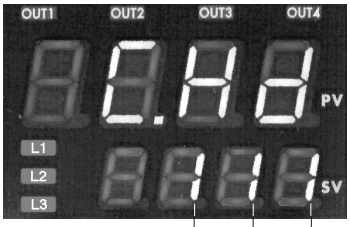


| OUTPUT 2 |
|---|
| 0 = None |
| 1 = Relay |

| OUTPUT 3 |
|---|
| 0 = None |
| 1 = Relay |

| SERIAL COMMUNICATION |
|---|
| 0 = None |

| | | |
|---|---|---|
| | INF | Information display |
| | UPd | Software version |
| | Err | Self diagnostic error code |
| 110 | C.Hd | Configuration hrd |

| | |
|---|---|
| 0 | No Error |
| 1 | Lo |
| 2 | Hi |
| 3 | ERR |
| 4 | SBR |

+8 error OUT2 card recognition
+16 error OUT3 card recognition

## • CFG

| | | |
|---|---|---|
| | CFG | Control parameters |
| 0 | S.tu | Enabling self-tuning, autotuning, softstart |
| 1.2 | h.Pb | Proportional band for heating or hysteresis in regulation ON/OFF — 0 ... 999.9% f.s. |
| 5.83 | h. It | Integral time for heating — 0.00 ... 99.99 min |
| 1.33 | h.dt | Derivative time for heating — 0.00 ... 99.99 min |
| 100.0 | h.P.H | Maximum power limit for heating — 0.0 ... 100.0% |
| 0.0 | h.P.L | Minimum power limit for heating (not available for double heat/ cool action) — 0.0 ... 100.0% |

| S.tun | Continuous autotuning | Sel-ftuning | Softstart |
|---|---|---|---|
| 0 | NO | NO | NO |
| 1 | YES | NO | NO |
| 2 | NO | YES | NO |
| 3 | YES | YES | NO |
| 4 | NO | NO | YES |
| 5 | YES | NO | YES |
| 6 | - | - | - |
| 7 | - | - | - |

| S.tun | Autotuning one shot | Selftuning | Softstart |
|---|---|---|---|
| 8* | WAIT | NO | NO |
| 9 | GO | NO | NO |
| 10* | WAIT | YES | NO |
| 11 | GO | YES | NO |
| 12* | WAIT | NO | YES |
| 13 | GO | NO | YES |

(*) +16 with passage automatic rifle in GO if PV-SP > 0,5%
+32 with passage automatic rifle in GO if PV-SP > 1%
+64 with passage automatic rifle in GO if PV-SP > 2%
+128 with passage automatic rifle in GO if PV-SP > 4%

| | | | |
|---|---|---|---|
| 0 | r.St | Manual reset | -999 ... 999 punti scala |
| 0.0 | P.r.S | Reset power | -100.0 ... 100.0% |
| 0 | A.r.S | Antireset | 0 ... 9999 scale points |
| 0.0 | FFd | Feedforward | -100.0 ... 100.0% |
| 0.0 | SoF | Softstart time | 0.0 ... 500.0 min |
| 0.0 | L.b.t | Waiting time for LBA alarm intervention (Set to "0" to disable LBA alarm) | 0.0 ... 500.0 min (*) |
| 0.0 | L.b.P | Power limit for LBA alarm condition | -100.0 ... 100.0% (*) |
| 0.0 | FA.P | Power output in fault condition (when probe is faulty) | -100.0 ... 100.0% ON / OFF |
| 0.0 | G.SP | Set gradient (see applicable note) | 0.0...999.9 digit/min. (digit / sec see SP.r) |
| 0.0 | G.S0 | Setpoint gradient of pre-heating | 0.0 ... 999.9 digit / min. (digit / sec seeSP.r) |
| 0 | Ht.0 | Retention time of pre-heating setpoint | 0 … 200 min. (sec see SP.r) |
| 0.0 | SP.0 | Setpoint of pre-heating | Lo.L … Hi.L |
| 0.0 | G.S 1 | Set gradient at the end of the pre-heating | 0.0 ... 999.9 digit / min. (digit / sec see SP.r) |

(*) LBA alarm may be reset by simultaneously pressing Δ + ∇ keys when OutP is displayed or by switching to Manual.

## • InP

**InP** — Input settings

**0** — SP.r — Def. remote setpoint — 0 default (remote setpoint present)

+2 Times of pre-heating and gradients of set digit/sec

**30** — tYP. — Probe type, signal, enable custom linearization, and main input scale

| Type | Probe type | without decimal point | with decimal point |
|---|---|---|---|
| | Sensore: | TC | |
| 0 | TC J °C | 0/1000 | 0.0/999.9 |
| 1 | TC J °F | 32/1832 | 32.0/999.9 |
| 2 | TC K °C | 0/1300 | 0.0/999.9 |
| 3 | TC K °F | 32/2372 | 32.0/999.9 |
| 4 | TC R °C | 0/1750 | 0.0/999.9 |
| 5 | TC R °F | 32/3182 | 32.0/999.9 |
| 6 | TC S °C | 0/1750 | 0.0/999.9 |
| 7 | TC S ° F | 32/3182 | 32.0/999.9 |
| 8 | TC T °C | -200/400 | -199.9/400.0 |
| 9 | TC T °F | -328/752 | -199.9/752.0 |
| 28 | TC | CUSTOM | CUSTOM |
| 29 | TC | CUSTOM | CUSTOM |
| 30 | PT100 °C | -200/850 | -199.9/850.0 |
| 31 | PT100 °F | -328/156 2 | -199.9/999.9 |
| 32 | JPT100 °C | -200/600 | -199.9/600.0 |
| 33 | JPT100 °F | -328/1112 | -199.9/999.9 |
| 34 | PTC °C | -55/120 | -55.0/120.0 |
| 35 | PTC °F | -67/248 | -67.0/248.0 |
| 36 | NTC °C | -10/70 | -10.0/70.0 |
| 37 | NTC °F | 14/158 | 14.0/158.0 |
| 38 | 0...60 mV | -1999/9999 | -199.9/999.9 |
| 39 | 0...60 mV | Custom scale | Custom scale |
| 40 | 12...60 mV | -1999/9999 | -199.9/999.9 |
| 41 | 12...60 mV | Custom scale | Custom scale |
| 42 | 0...20 mA | -1999/9999 | -199.9/999.9 |
| 43 | 0...20 mA | Custom scale | Custom scale |
| 44 | 4...20 mA | -1999/9999 | -199.9/999.9 |
| 45 | 4...20 mA | Custom scale | Custom scale |
| 46 | 0...10 V | -1999/9999 | -199.9/999.9 |
| 47 | 0...10 V | Custom scale | Custom scale |
| 48 | 2...10 V | -1999/9999 | -199.9/999.9 |
| 49 | 2...10 V | Custom scale | Custom scale |
| 50 | 0...5 V | -1999/9999 | -199.9/999.9 |
| 51 | 0...5 V | Custom scale | Custom scale |
| 52 | 1...5 V | -1999/9999 | -199.9/999.9 |
| 53 | 1...5 V | Custom scale | Custom scale |
| 54 | 0...1 V | -1999/9999 | -199.9/999.9 |
| 55 | 0...1 V | Custom scale | Custom scale |
| 56 | 200mv..1V | -1999/9999 | -199.9/999.9 |
| 57 | 200mv..1V | Custom scale | Custom scale |
| 58 | Cust10 V-20mA | -1999/9999 | -199.9/999.9 |
| 59 | Cust10 V-20mA | Custom scale | Custom scale |
| 60 | Cust 60mV | -1999/9999 | -199.9/999.9 |
| 61 | Cust 60mV | Custom scale | Custom scale |
| 62 | PT100-JPT | CUSTOM | CUSTOM |
| 63 | PTC | CUSTOM | CUSTOM |
| 64 | NTC | CUSTOM | CUSTOM |

For custom linearization:
- LO signal is generated with variable below Lo.S or at minimum calibration value
- HI signal is generated with variable above Lo.S or at maximum calibration value

Max. non-linearity error for thermocouples (TC), resistors (PT100) and thermistors (PTC, NTC).

The error is calculated as deviation from theoretical value and is expressed as percentage of full scale (in °C).

**S, R** range 0...1750°C; error < 0.2% f.s. (t > 300°C) / for other range; error < 0.5% f.s.
**T** error < 0.2% f.s. (t > -150°C)
**B** range 44...1800°C; error < 0.5% f.s. (t > 300°C) / range 44,0...999,9; error < 1% f.s. (t > 300°C)
**U** range -99,9...99,9 and -99...99°C; error < 0.5% f.s. / for other range; error < 0.2% f.s. (t > -150°C)
**G** error < 0.2% f.s. (t > 300°C)
**D** error < 0.2% f.s. (t > 200°C)
**C** range 0...2300; error < 0.2% f.s. / for other range; error < 0.5% f.s.

**NTC** error < 0.5% f.s.

Tc: **J, K, E, N, L** error < 0,2% f.s.
**JPT100** and **PTC** error < 0,2% f.s.
**PT100** scale -200...850°C
Precision better than 0,2% f.s. at 25°C
In range 0...50°C:
- Precision better than 0,2% f.s. in range -200...400°C
- Precision better than 0,4% f.s. in range +400...850°C

(where f.s. refers to range -200... +850°C)

**0.1** — FLt — Digital filter on input (if = 0 excludes averaging filter on sample value) — 0.0 ... 20.0 sec

**0.5** — FLd — Digital filter on input display — 0 ... 9.9 scale points

**1** — dP.S — Decimal point position for input scale

| dP_S | Format |
|---|---|
| 0 | xxxx |
| 1 | xxx.x |
| 2 | xx.xx (*) |
| 3 | x.xxx (*) |

(*) not available for TC, RTD, PTC and NTC scales

**0.0** — Lo.S — Minimum limit of main input scale — min...max input range selected in tyP

**850.0** — Hi.S — Maximum limit of main input scale — min...max input range selected in tyP

**0** — oFS. — Offset correction of main input — -999 ... 999 scale points

**30.0** — LoL — Lower limit for setting SP and absolute alarms — Lo.S ... Hi.S

**130.0** — HiL — Upper limit for setting SP and absolute alarms — Lo.S ... Hi.S

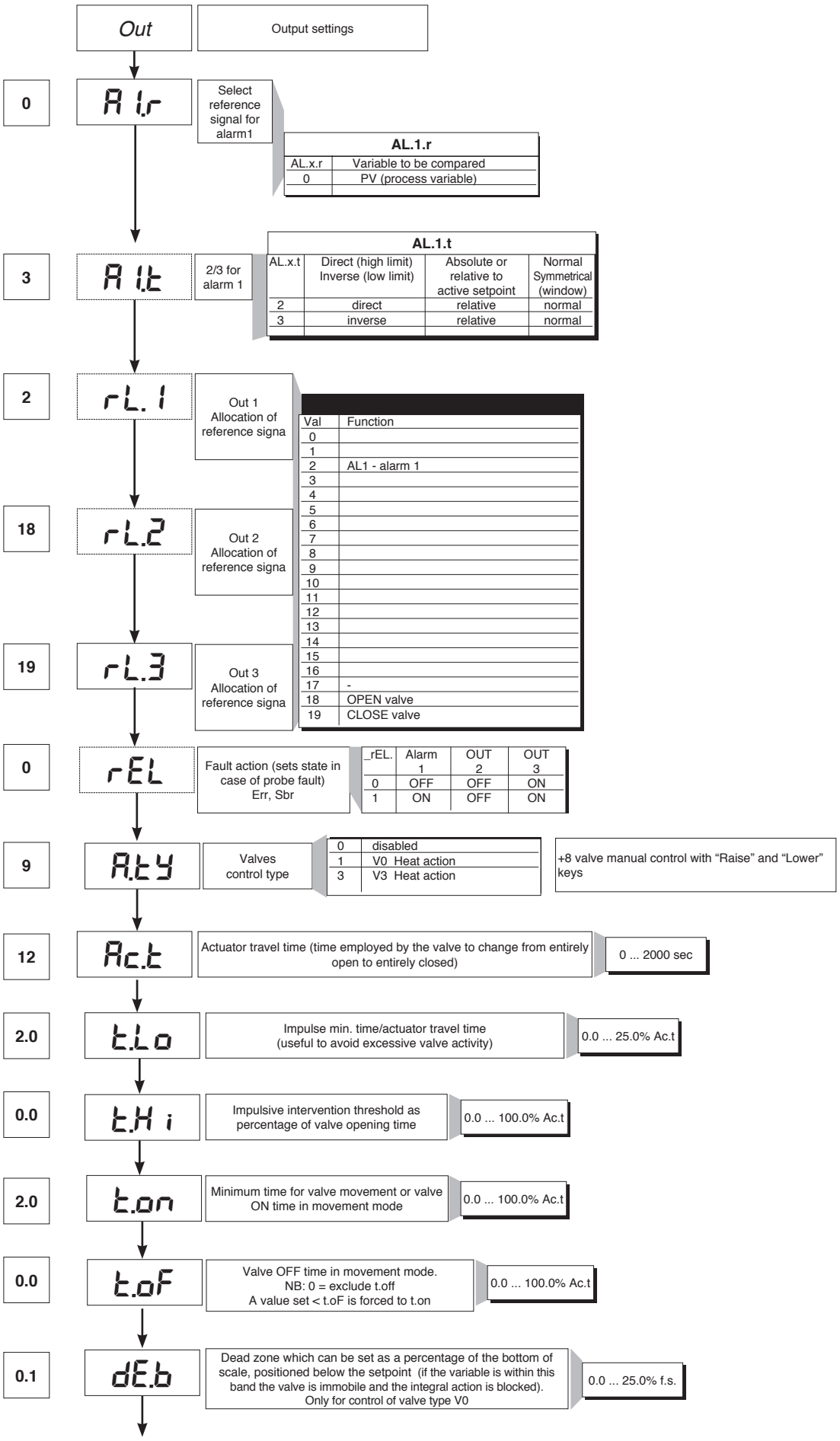
Out
Output settings
0
A1.r
Select reference signal for alarm1
AL.1.r
AL.x.r | Variable to be compared
0 | PV (process variable)
3
A1.t
2/3 for alarm 1
AL.1.t
AL.x.t | Direct (high limit) Inverse (low limit) | Absolute or relative to active setpoint | Normal Symmetrical (window)
2 | direct | relative | normal
3 | inverse | relative | normal
2
rL.1
Out 1 Allocation of reference signa
Val | Function
0
1
2 | AL1 - alarm 1
3
4
5
6
7
8
9
10
11
12
13
14
15
16
17 | -
18 | OPEN valve
19 | CLOSE valve
18
rL.2
Out 2 Allocation of reference signa
19
rL.3
Out 3 Allocation of reference signa
0
rEL
Fault action (sets state in case of probe fault) Err, Sbr
_rEL. | Alarm 1 | OUT 2 | OUT 3
0 | OFF | OFF | ON
1 | ON | OFF | ON
9
A.ty
Valves control type
0 | disabled
1 | V0 Heat action
3 | V3 Heat action
+8 valve manual control with “Raise” and “Lower” keys
12
Ac.t
Actuator travel time (time employed by the valve to change from entirely open to entirely closed)
0 ... 2000 sec
2.0
t.Lo
Impulse min. time/actuator travel time (useful to avoid excessive valve activity)
0.0 ... 25.0% Ac.t
0.0
t.Hi
Impulsive intervention threshold as percentage of valve opening time
0.0 ... 100.0% Ac.t
2.0
t.on
Minimum time for valve movement or valve ON time in movement mode
0.0 ... 100.0% Ac.t
0.0
t.oF
Valve OFF time in movement mode. NB: 0 = exclude t.off A value set < t.oF is forced to t.on
0.0 ... 100.0% Ac.t
0.1
dE.b
Dead zone which can be set as a percentage of the bottom of scale, positioned below the setpoint (if the variable is within this band the valve is immobile and the integral action is blocked). Only for control of valve type V0
0.0 ... 25.0% f.s.

## • Prot

12 — *Pro* — Protection code

| Prot | Display | Modification |
|---|---|---|
| 0 | SP, Hy.P, Hy.n, AL.2, AL.3, PoS, OuP, INF | SP, Hy.P , Hy.n, AL.2, AL.3, PoS |
| 1 | SP, Hy.P, Hy.n, AL.2, AL.3, PoS, OuP, INF | SP |
| 2 | SP, OuP, INF | |

+ 4 to disable InP, Out
+ 8 to disable CFG
+ 16 to disable SW “power-up - power down”
+ 32 disable manual power latching
+ 64 to disable manual power modification
+128 enables full configuration

Note: OuP and INF only display configuration extended

## • Hrd

*Hrd* — Hardware configuration

0 — hd.1 — Enable multiset instrument control by serial

6 — Ctr — Control type

| Val | Control type |
|---|---|
| 0 | P heat |
| 1 | |
| 2 | |
| 3 | PI heat |
| 4 | |
| 5 | |
| 6 | PID heat |
| 7 | |
| 8 | |
| 9 | ON-OFF heat |
| 10 | |
| 11 | |
| 12 | |
| 13 | |
| 14 | |

Selection of derivative action sampling time:
+ 0 sample 1 sec.
+ 16 sample 4 sec.
+ 32 sample 8 sec.
+ 64 sample 240 msec.

Note: LbA alarm is not enabled with ON/OFF type control

1 — AL.n — Select number of enabled alarms

| AL.nr | Alarme1 | Alarm 2 | Alarm 3 |
|---|---|---|---|
| 1 | enabled | disabled | disabled |

1 — but. — Function of M/A keys

| butt | |
|---|---|
| 0 | No function (key disenabled)) |
| 1 | MAN / AUTO controller |
| 2 | |
| 3 | HOLD |
| 4 | |
| 5 | |
| 6 | Start/Stop selftuning |
| 7 | Start/Stop autotuning |
| 8 | |

+ 16 disables the “back menu” function (Auto/Man + F keys) in the configuration menus

0 — dSP — Defining SV display function

| diSP | Lower display (SV) function |
|---|---|
| 0 | SSP - setpoint enabled |
| 1 | PoS - valve position |
| 2 | Control output value |
| 3 | Deviation (SSP - PV) |

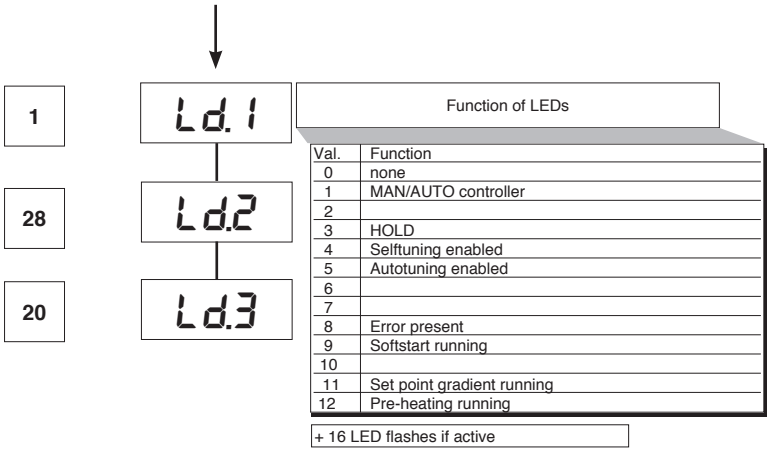


| Val. | Function |
|---|---|
| 0 | none |
| 1 | MAN/AUTO controller |
| 2 | |
| 3 | HOLD |
| 4 | Selftuning enabled |
| 5 | Autotuning enabled |
| 6 | |
| 7 | |
| 8 | Error present |
| 9 | Softstart running |
| 10 | |
| 11 | Set point gradient running |
| 12 | Pre-heating running |

## • Lin

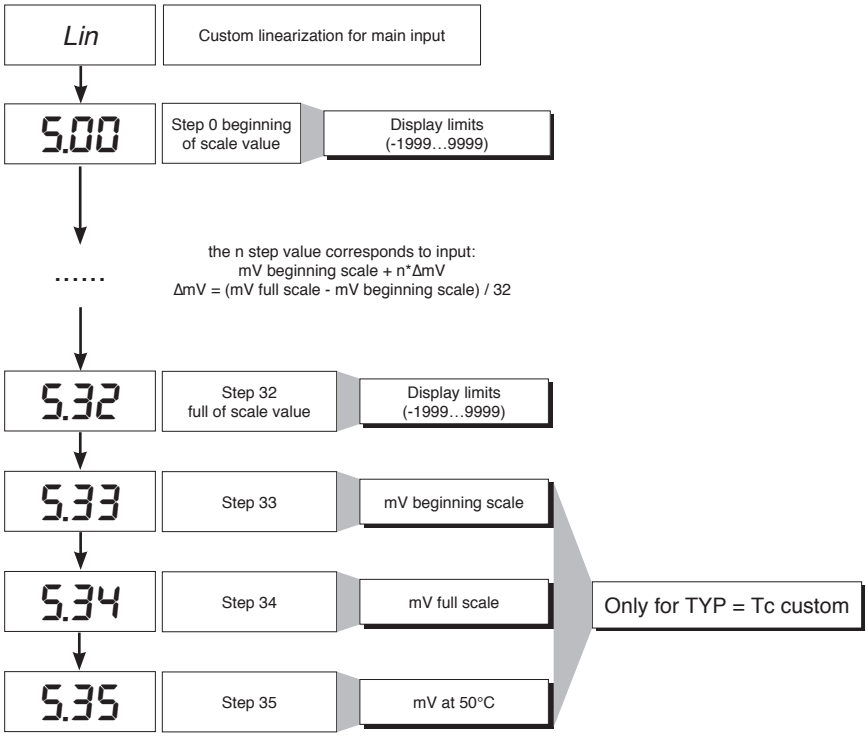


## • U.CAL

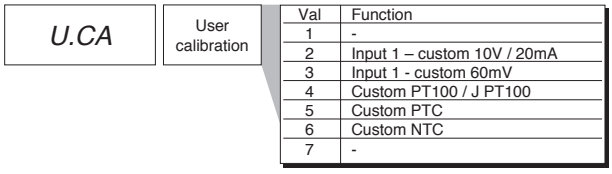


| Val | Function |
|---|---|
| 1 | - |
| 2 | Input 1 – custom 10V / 20mA |
| 3 | Input 1 - custom 60mV |
| 4 | Custom PT100 / J PT100 |
| 5 | Custom PTC |
| 6 | Custom NTC |
| 7 | - |

## 7 • CONSENT FOR BURNER AL1

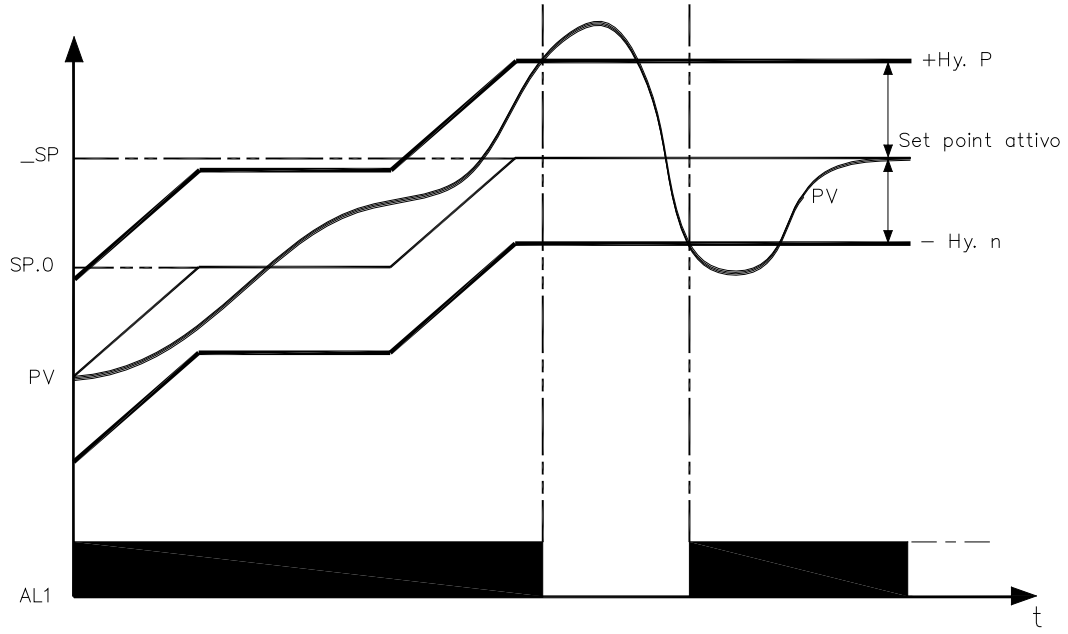


Obtain burner consent by configuring alarm 1 as inverse deviation with positive hysteresis Hy.P and negative hysteresis Hy.n

## 8 • PRE-HEATING FUNCTION

Enable the pre-heating function by setting parameters GS.0, Ht.0, GS.1 other than zero.
It consists of three phases that are activated sequentially at firing:

- **Ramp 0 phase**
  Enabled by setting GS.0 > 0. Starting from setpoint = PV (initial state), it reaches pre-heating set SP.0 with gradient GS.0
- **Maintenance phase**
  Enabled by setting Ht.0 > 0. Maintains pre-heating setpoint SP.0 for time Ht.0
- **Ramp 1 phase**
  Enabled by setting GS.1 > 0. Starting from pre-heating setpoint SP.0, it reaches active _SP set with gradient GS.1

In case of selftuning, the pre-heating function is not activated

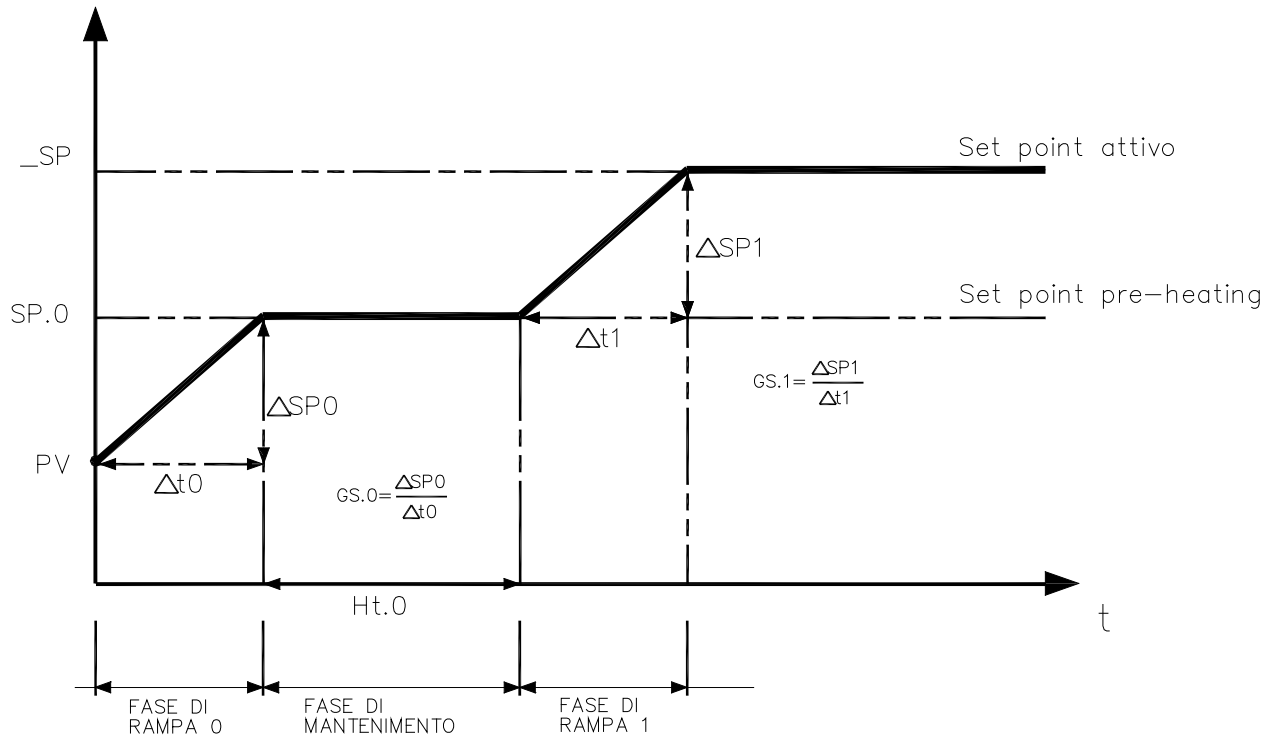

# 9 • ADJUSTMENT WITH MOTORIZED VALVE

In an adjustment process the adjustment valve has the function of varying fuel delivery (frequently corresponding to the thermal energy introduced into the process) in relation to the signal coming from the controller.
For this purpose it is provided with an actuator able to modify its opening value, overcoming the resistances produced by the fluid passing inside it.
The adjustment valves vary the delivery in a modulated manner, producing finite variations in the fluid passage inner area corresponding to finite variations of the actuator input signal, coming from the controller. The servomechanism, for example, comprises an electric motor, a reducer and a mechanical transmission system which actions the valve.
Various auxiliary components can be present such as the mechanical and electrical safety end travels, manual actioning systems.

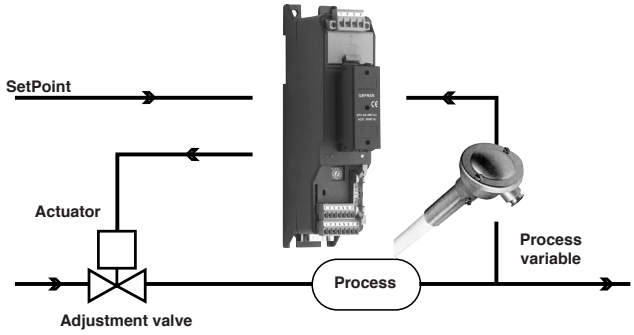


CONTROL EXAMPLE FOR V0 VALVE

The controller determines, on the basis of the dynamics of the process, the control output for the valve corresponding to the opening of the same in such a way so as to maintain the desired value of the process variable.

## Characteristic parameters for valves control

- Actuator time (Ac.t) is the time employed by the valve to pass from entirely open to entirely closed (or vice-versa), and can be set with a resolution of one second. It is a mechanical feature of the valve+actuator unit.
**NOTE**: if the actuator's travel is mechanically limited it is necessary to proportionally reduce the Ac.t value.

- Minimum impulse (t.Lo) expressed as a % of the actuator time (resolution 0.1%).
Represents the minimum change in position corresponding to a minimum change in power supplied by the instrument below which the actuator will not physically respond to the command.
This represents the minimum variation in position due to which the actuator does not physically respond to the command.
The minimum duration of the movement can be set in t.Lo, expressed as a % of actuator time.
- Impulsive intervention threshold (t.Hi) expressed as a % of the actuator time (resolution 0.1%) represents the position displacement (requested position – real position) due to which the manoeuvre request becomes impulsive.

You can choose between 2 types of control:
1) ON time of movement = t.on and OFF time proportional to shift and greater than or equal to t.Lo (we recommend setting t.on = t.Lo) (set t.oF = 0).
2) ON time of movement = t.on and OFF time = t.oF. A value set for t.oF < t.on is forced to t.on. To activate this type, set t.oF < > 0.
The type of movement approach allows fine control of the reverse drive valve (from potentiometer or not), especially useful in cases of high mechanical inertia.
Set t.Hi = 0 to exclude modulation in positioning.
This type of modulated approach allows precise control of the feedback actioned valve, by a potentiometer or not, and is especially useful in cases of high mechanical inertia. Setting t.Hi = 0 excludes modulation in positioning.

- Dead zone(dE.b) is a displacement band between the adjustment setpoint and the process variable within which the controller does not supply any command to the valve (Open = OFF; Close = OFF). It is expressed as a percentage of the bottom scale and is positioned below the setpoint.
The dead zone is useful in an operative process to avoid straining the actuator with repeated commands and an insignificant effect on the adjustment. Setting dE.b = 0 the dead zone is excluded.

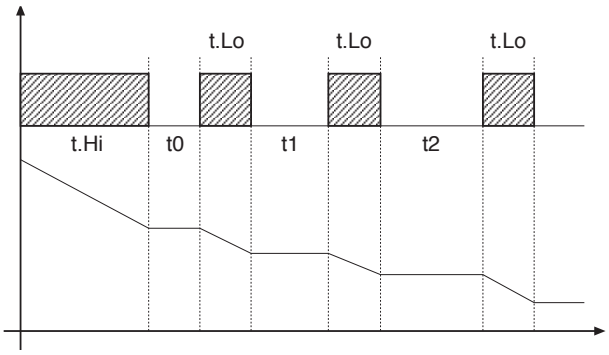


Graph of behavior inside the band with integral time ≠ 0.

With integral time = 0, movement ON time is always equal to OFF time.

t0 = t.Lo

## Valve control modes

With the controller in manual, the setting of parameter At.y ≥ 8 allows direct control of the valve open and close commands through the keyboard Increments and Decrements on the front seats.

**V0** - for floating valve without potentiometer

Model V0 have similar behaviour: every manoeuvre request greater than the minimum impulse t.Lo is sent to the actuator by means of the OPEN/CLOSE relays; every action updates the presumed position of the virtual potentiometer calculated on the basis of the actuator travel declared time.
In this way there is always a presumed position of the valve which is compared with the position request of the controller.
Having reached a presumed extreme position (entirely open or entirely closed determined by the “virtual potentiometer”) the controller provides a command in the same direction, in this way ensuring the real extreme position is reached (minimum command time = t.on).
The actuators are usually protected against the OPEN command in the entirely open position or CLOSE command in the entirely closed position.

**V3** - for floating valve, PI control

When the difference between the position calculated by the controller and the only proportional component exceeds the value corresponding to the minimum impulse t.Lo the controller provides an OPEN or CLOSE command of the duration of the minimum impulse itself t.Lo.
At each delivery the integral component of the command is set to zero (discharge of the integral).
The frequency and duration of the impulses is correlated to the integral time (h.it or c.it).

*Non-movement behavior*
t.Hi = 0: with power = 100% or 0.0%, the corresponding open or close outputs always remain enabled (safety status).

*Movement behavior*
t.Hi < > 0: with position attained corresponding to 100% or 0.0%, the corresponding open or close outputs are switched off.

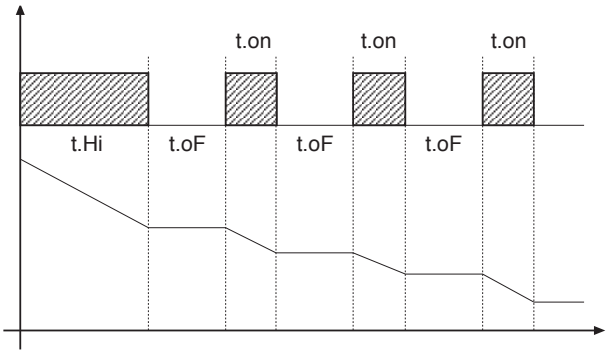


If t.oF = 0, current function is maintained.

If t.oF ≠ 0 movement mode will be as shown on the graph

# 10 • CONTROL ACTIONS

*Proportional Action*:
action in which contribution to output is proportional to deviation at input (deviation = difference between controlled variable and setpoint).
*Derivative Action*:
action in which contribution to output is proportional to rate of variation input deviation.
*Integral Action*:
action in which contribution to output is proportional to integral of time of input deviation.

**Influence of Proportional, Derivative and Integral actions on response of process under control**

* An increase in P.B. reduces oscillations but increases deviation.
* A reduction in P.B. reduces the deviation but provokes oscillations of the controlled variable (the system tends to be unstable if P.B. value is too low).
* An increase in Derivative Action corresponds to an increase in Derivative Time, reduces deviation and prevents oscillation up to a critical value of Derivative Time, beyond which deviation increases and prolonged oscillations occur.
* An increase in Integral Action corresponds to a reduction in Integral Time, and tends to eliminate deviation between the controlled variable and the setpoint when the system is running at rated speed.

If the Integral Time value is too long (Weak integral action), deviation between the controlled variable and the setpoint may persist.
Contact GEFRAN for more information on control actions.

# 11 • MANUAL TUNING

**A)** Enter the setpoint at its working value.
**B)** Set the proportional band at 0.1% (with on-off type setting).
**C)** Switch to automatic and observe the behavior of the variable. It will be similar to that in the figure:

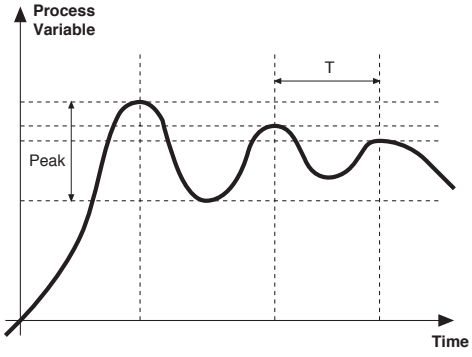


**D**) The PID parameters are calculated s follows: Proportional band

$$P.B. = \frac{\text{Peak}}{(V\ max - V\ min)} \times 100$$

(V max - V min) is the scale range.
Integral time: It = 1.5 x T
Derivative time: dt = It/4
**E)** Switch the unit to manual, set the calculated parameters. Return to PID action by setting the appropriate relay output cycle time, and switch back to Automatic.
**F)** If possible, to optimize parameters, change the setpoint and check temporary response. If an oscillation persists, increase the proportional band. If the response is too slow, reduce it.

# 12 • SET GRADIENT

SET GRADIENT: if set to ≠0, the setpoint is assumed equal to PV at power-on and auto/man switchover. With gradient set, it reaches the local setpoint.
Every variation in setpoint is subject to a gradient.
The set gradient is inhibited at power-on when self-tuning is engaged.
If the set gradient is set to ≠0, it is active even with variations of the local setpoint.
The control setpoint reaches the set value at the speed defined by the gradient.

# 13 • SOFTWARE ON / OFF SWITCHING FUNCTION

**How to switch the unit OFF:** hold down the “F” and “Raise” keys simultaneously for 5 seconds to deactivate the unit, which will go to the OFF state while keeping the line supply connected and keeping the process value displayed. The SV display is OFF.
All outputs (alarms and controls) are OFF (logic level 0, relays de-energized) and all unit functions are disabled except the switch-on function and digital communication.
**How to switch the unit ON:** hold down the “F” key for 5 seconds and the unit will switch OFF to ON. If there is a power failure during the OFF state, the unit will remain in OFF state at the next power-up (ON/OFF state is memorized).
The function is normally enabled, but can be disabled by setting the parameter Prot = Prot +16.

# 14 • SELF-TUNING

The function works for single output systems (heating or cooling). The self-tuning action calculates optimum control parameter values during process startup. The variable (for example, temperature) must be that assumed at zero power (room temperature).
The controller supplies maximum power until an intermediate value between starting value and setpoint is reached, after which it zeros power.
PID parameters are calculated by measuring overshoot and the time needed to reach peak. When calculations are finished, the system disables automatically and the control proceeds until the setpoint is reached.

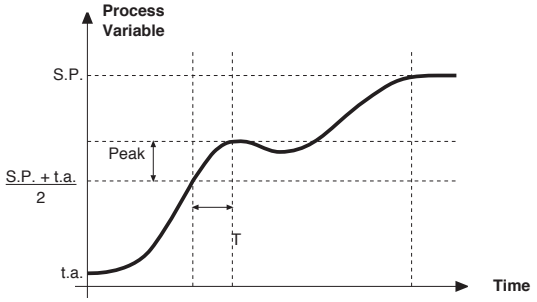


**How to activate self-tuning:**
**A. Activation at power-on**
1. Set the setpoint to the required value
2. Enable selftuning by setting the Stun parameter to 2 (CFG menu)
3. Turn off the instrument
4. Make sure the temperature is near room temperature
5. Turn on the instrument again

**B. Activation from keyboard**
1. Make sure that key M/A is enabled for Start/Stop selftuning (code but = 6 Hrd menu)
2. Bring the temperature near room temperature
3. Set the setpoint to the required value
4. Press key M/A to activate selftuning (Attention: selftuning interrupts if the key is pressed again)

The procedure runs automatically until finished, when the new PID parameters are stored: proportional band, integral and derivative times calculated for the active action (heating or cooling). In case of double action (heating or cooling), parameters for the opposite action are calculated by maintaining the initial ratio between parameters (ex.: CPb = HPb * K; where K = CPb / HPb when self-tuning starts). When finished, the Stun code is automatically cancelled.

**Notes :**
-The procedure does not start if the temperature is higher than the setpoint (heating control mode) or if the temperature is lower than the setpoint (cooling control mode). In this case , the Stu code is not cancelled.
-It is advisable to eneable one of the configurable LEDs to signal selftuning status.By setting one of parameters LED1, LED2, LED3=4 or 20 on the Hrd menu, the respective LED will be on or flashing when selftuning is active.

# 15 • ACCESSORIES

## • Interface for instrument configuration

*KIT PC USB / RS485 o TTL*

Kit for PC via the USB port (Windows environment) for GEFRAN instruments configuration:
Lets you read or write all of the parameters
• A single software for all models
• Easy and rapid configuration
• Saving and management of parameter recipes
• On-line trend and saving of historical data
Component Kit:
- Connection cable PC USB ... port TTL
- Connection cable PC USB ... RS485 port
- Serial line converter
- CD SW GF Express installation

## • ORDERING CODE

| | |
|---|---|
| **GF_eXK-2-0-0** | cod F049095 |

# 16 • ORDER CODE

600V [R] [R] [R] [-]

| UTPUT 1 | |
|---|---|
| Relay | R |

| UTPUT 2 | |
|---|---|
| Relay | R |

| UTPUT 3 | |
|---|---|
| Relay | R |

| POWER SUPPLY | |
|---|---|
| 0 | 11...27Vac/dc |
| 1 | 100...240Vac |

## • WARNINGS

WARNING: this symbol indicates danger. It is placed near the power supply circuit and near high-voltage relay contacts.

**Read the following warnings before installing, connecting or using the device:**
• follow instructions precisely when connecting the device.
• always use cables that are suitable for the voltage and current levels indicated in the technical specifications.
• the device has no ON/OFF switch: it switches on immediately when power is turned on. For safety reasons, devices permanently connected to the power supply require a two-phase disconnecting switch with proper marking. Such switch must be located near the device and must be easily reachable by the user. A single switch can control several units.
• if the device is connected to electrically NON-ISOLATED equipment (e.g. thermocouples), a grounding wire must be applied to assure that this connection is not made directly through the machine structure.
• if the device is used in applications where there is risk of injury to persons and/or damage to machines or materials, it MUST be used with auxiliary alarm units. You should be able to check the correct operation of such units during normal operation of the device.
• before using the device, the user must check that all device parameters are correctly set in order to avoid injury to persons and/or damage to property.
• the device must NOT be used in infiammable or explosive environments. It may be connected to units operating in such environments only by means of suitable interfaces in conformity to local safety regulations.
• the device contains components that are sensitive to static electrical discharges. Therefore, take appropriate precautions when handling electronic circuit boards in order to prevent permanent damage to these components.
***Installation***: installation category II, pollution level 2, double isolation
The equipment is intended for permanent indoor installations within their own enclosure or panel mounted enclosing the rear housing and exposed terminals on the back.
• only for low power supply: supply from Class 2 or low voltage limited energy source
• power supply lines must be separated from device input and output lines; always check that the supply voltage matches the voltage indicated on the device label.
• install the instrumentation separately from the relays and power switching devices
• do not install high-power remote switches, contactors, relays, thyristor power units (particularly if “phase angle” type), motors, etc... in the same cabinet.
• avoid dust, humidity, corrosive gases and heat sources.
• do not close the ventilation holes; working temperature must be in the range of 0...50°C.
• surrounding air: 50°C
• use 60/75°C copper (Cu) conductor only, wire size range 2x No 22 - 14AWG, Solid/Stranded
• use terminal tightening torque 0.5N m
If the device has faston terminals, they must be protected and isolated; if the device has screw terminals, wires should be attached at least in pairs.
• *Power*: supplied from a disconnecting switch with fuse for the device section; path of wires from switch to devices should be as straight as possible; the same supply should not be used to power relays, contactors, solenoid valves, etc.; if the voltage waveform is strongly distorted by thyristor switching units or by electric motors, it is recommended that an isolation transformer be used only for the devices, connecting the screen to ground; it is important for the electrical system to have a good ground connection; voltage between neutral and ground must not exceed 1V and resistance must be less than 6Ohm; if the supply voltage is highly variable, use a voltage stabilizer for the device; use line filters in the vicinity of high frequency generators or arc welders; power supply lines must be separated from device input and output lines; always check that the supply voltage matches the voltage indicated on the device label.
• *Input and output connections*: external connected circuits must have double insulation; to connect analog inputs (TC, RTD) you have to: physically separate input wiring from power supply wiring, from output wiring, and from power connections; use twisted and screened cables, with screen connected to ground at only one point; to connect adjustment and alarm outputs (contactors, solenoid valves, motors, fans, etc.), install RC groups (resistor and capacitor in series) in parallel with inductive loads that work in AC *(Note: all capacitors must conform to VDE standards (class x2) and support at least 220 VAC. Resistors must be at least 2W)*; fit a 1N4007 diode in parallel with the coil of inductive loads that operate in DC.
**GEFRAN spa will not be held liable for any injury to persons and/or damage to property deriving from tampering, from any incorrect or erroneous use, or from any use not conforming to the device specifications.**

# Set-up for 600V RRR0-1-T73 regulator

## Set up for temperature probe Pt100 (ex Siemens QAE2120 130°C max.)

The regulator comes out of the factory preset with the corresponding values of the Siemens RWF40.000 and RWF50.2x

Verify wiring of the sensor

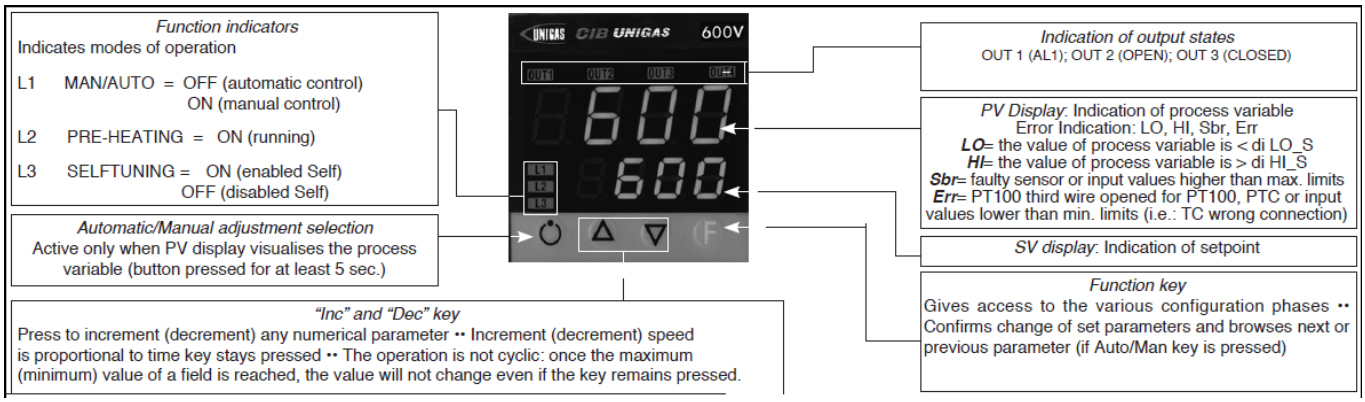


Regulation of the set-point = **80**
It can be modified by using arrows "up" and "down".
By pushing **F** you go to parameters:

| | |
|---|---|
| Hy.P | 5 (hysteresis positive for output 1, terminals 21-22 (ex Q13-Q14) |
| Hy.n | -5 hysteresis negative for output ,1 terminals 21-22 (ex Q13-Q14) |

Keep pushing **F** until you see **PASS**, release **F** and through the arrows set **99**, push **F** and visualize **Pro** (protection code) default is **12**, through the arrows set **128** and push **F,** keep it pushed until all parameters **InF**, **CFG**, **InP**, **Out**, **PASS** are visualized.

| **CFG** | |
|---|---|
| S.tun | 0 |
| hPb | 1,2 |
| hIt | 5,83 |
| hdt | 1,33 |
| … | |

| **InP** | |
|---|---|
| …. | |
| tyP | 30 (Pt100) |
| … | |
| dP_S | 1 (decimals num.) |
| Lo.S | 0 (min. sensor scale) |
| Hi.S | 850,0 (max sensor scale) |
| oFS | 0 (offset of input correction) |
| Lo.L | 30,0 (lower set-point range limit) |
| Hi.L | 130,0 (upper set-point range limit) |

| **Out** | |
|---|---|
| A1.r | 0 |
| … | |
| A1.t | 3 (operating mode AL1 =inverse-relative-normal) |
| … | |
| rL.1 | 2 (AL1) |
| rL.2 | 18 (open) |
| rL.3 | 19 (close) |
| rEL | 0 |
| A.ty | 9 (type of servocontrol command) |
| Ac.t | 12 (servocontrol running time: SQN72.4…/STA12..=12; SQM40.265=30) |
| t_Lo | 2 |
| t_Hi | 0.0 |
| t.on | 2 |
| t.oF | 0.0 |
| dE.b | 0,1 (dead zone in % of end scale) |
| | |

| **PAS** | 99 then push and keep pushed **F** until visualization of **Hrd** |
|---|---|
| | |
| **Hrd** | |
| … | |
| CtrL | 6 (PID warm) |
| AL.nr | 1 |
| but | 1 |
| diSP | 0 |
| Ld.1 | 1 |
| Ld.2 | 28 |
| Ld.3 | 20 |

Keep pushed **F** until you visualize **PASS**, release **F** and through the arrows set **99**, push **F** and visualize **Pro** (protection code) from **128**, through the arrows, bring it back to **12,** and keep **F** pushed until you come back to set-point value.

**Manual operation** :
Keep pushed the lower left key for at least 5 sec.
The instrument will enter the "MAN" mode (see also "Ld1" switching on).
Through the arrows, "Open" and "Close" outputs are activated.
To come back to normal working keep the lower left key pushed for at least 5 sec.

**Software switch off** :
By keeping pushed keys **Arrow up** + **F** for more than 5 sec. the instrument switches off the software, does not command the outputs and visualize only the variable of process measured by the probe.
To restore keep pushed **F** for more than 5 sec.

## Set up for temperature probe Pt100 for high temperature (350°C max.)

Verify wiring of the sensor

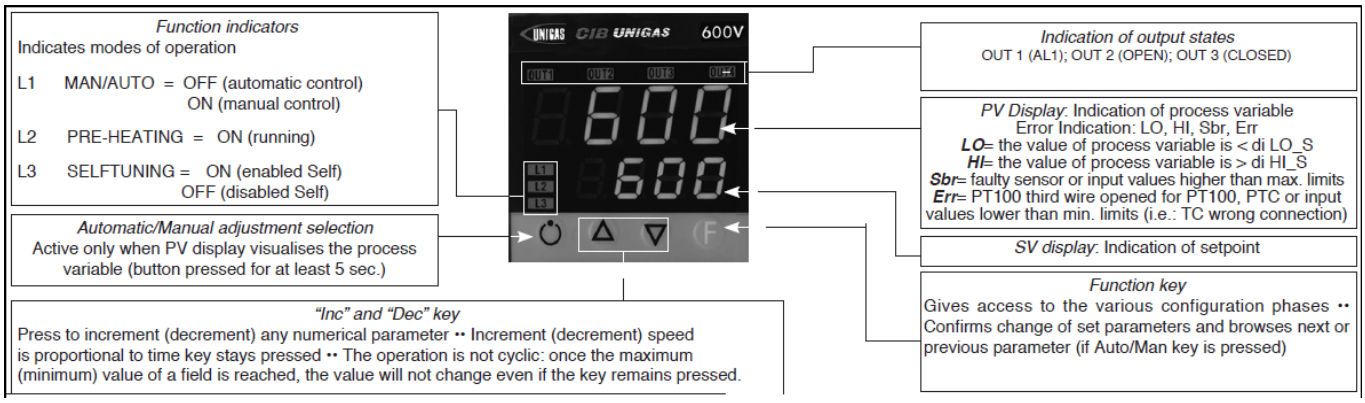


Regulation of the set-point = **80**
It can be modified by using arrows "up" and "down".
By pushing **F** you go to parameters:

| | |
|---|---|
| Hy.P | 10 (hysteresis positive for output 1 terminals 21-22 (ex Q13-Q14) |
| Hy.n | -5 (hysteresis negative for output 1 terminals 21-22 (ex Q13-Q14) |

Keep pushing **F** until you see **PASS**, release **F** and through the arrows set **99**, push **F** and visualize **Pro** (protection code) default is **12**, through the arrows set **128** and push **F,** keep it pushed until all parameters **InF**, **CFG**, **InP**, **Out**, **PASS** are visualized.

| **CFG** | |
|---|---|
| S.tun | 0 |
| hPb | 1,2 |
| hIt | 5,83 |
| hdt | 1,33 |
| … | |

| **InP** | |
|---|---|
| …. | |
| tyP | 30 (Pt100) |
| … | |
| dP_S | 1 (decimals num.) |
| Lo.S | 0 (min. sensor scale) |
| Hi.S | 850,0 (max sensor scale) |
| oFS | 0 (offset of input correction) |
| Lo.L | 0,0 (lower set-point range limit) |
| Hi.L | 350,0 (upper set-point range limit) |

| **Out** | |
|---|---|
| A1.r | 0 |
| … | |
| A1.t | 3 (mode AL1 =inverse-relative-normal) |
| … | |
| rL.1 | 2 (AL1) |
| rL.2 | 18 (open) |
| rL.3 | 19 (close) |
| rEL | 0 |
| A.ty | 9 (type of servocontrol command) |
| Ac.t | 12 (servocontrol running time: SQN72.4…/STA12..=12; SQM40.265=30) |
| t_Lo | 2 |
| t_Hi | 0.0 |
| t.on | 2 |
| t.oF | 0.0 |
| dE.b | 0,1 (dead zone in % of end scale) |

| **PAS** | 99 then push and keep pushed **F** until visualization of **Hrd** |
|---|---|
| | |
| **Hrd** | |
| … | |
| CtrL | 6 (PID warm) |
| AL.nr | 1 |
| but | 1 |
| diSP | 0 |
| Ld.1 | 1 |
| Ld.2 | 28 |
| Ld.3 | 20 |

Keep pushed **F** until you visualize **PASS**, release **F** and through the arrows set **99**, push **F** and visualize **Pro** (protection code) from **128**, through the arrows, bring it back to **12,** and keep **F** pushed until you come back to set-point value.

**Manual operation**:
Keep pushed the lower left key for at least 5 sec.
The instrument will enter the "MAN" mode (see also "Ld1" switching on).
Through the arrows, "Open" and "Close" outputs are activated.
To come back to normal working keep the lower left key pushed for at least 5 sec.

**Software switch off** :
By keeping pushed keys **Arrow up** + **F** for more than 5 sec. the instrument switches off the software, does not command the outputs and visualize only the variable of process measured by the probe.
To restore keep pushed **F** for more than 5 sec.

## Set up for pressure transmitter 2 wires signal 4÷20mA

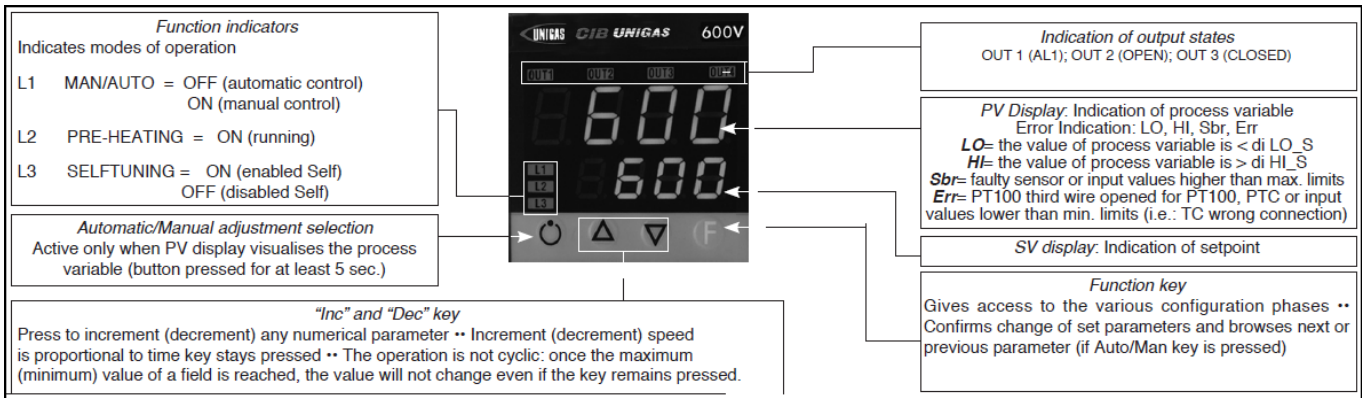


With pressure transmitters first we need to enable their power supply: remove the part as shown below, then, on the CPU unit, move the bridge from Pt100 to +Vt

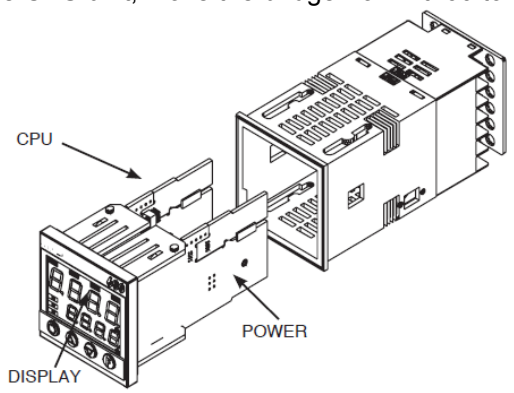


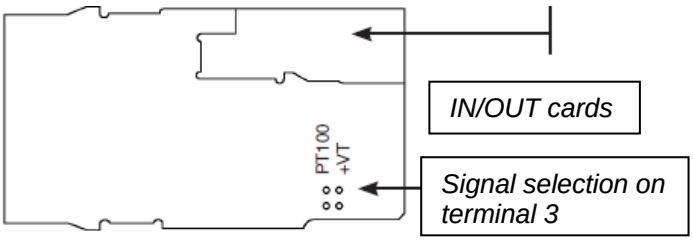


Verify wiring of the sensor

Impostazione set-point

| Transmitter | **1,6bar** | **3bar** | **10bar** | **16bar** | **25bar** | **40bar** |
|---|---|---|---|---|---|---|
| Set-point | 1bar | 1,5bar | 6bar | 6bar | 6bar | 6bar |

To modify it directly use "up" and "down" arrows.
By pushing **F** you go to parameter:

| Transmitter | **1,6bar** | **3bar** | **10bar** | **16bar** | **25bar** | **40bar** |
|---|---|---|---|---|---|---|
| Hy.P | 0,2bar | 0,5bar | 0,5bar | 0,8bar | 1,25bar | 2bar |
| Hy.n | 0bar | 0bar | 0bar | 0bar | 0bar | 0bar |

Keep pushing **F** until you see **PASS**, release **F** and through the arrows set **99**, push **F** and visualize **Pro** (protection code) default is **12**, through the arrows set **128** and push **F,** keep it pushed until all parameters **InF**, **CFG**, **InP**, **Out**, **PASS** are visualized.

| **CFG** | |
|---|---|
| S.tun | 0 |
| hPb | 5 |
| hIt | 1,33 |
| hdt | 0,33 |
| … | |

| InP | |
|---|---|
| …. | |
| tyP | 44 (4÷20mA) |
| … | |
| dP_S | 2 (decimals num.) |

| Transmitter | **1,6bar** | **3bar** | **10bar** | **16bar** | **25bar** | **40bar** | |
|---|---|---|---|---|---|---|---|
| Lo.S | 0,00 | 0,00 | 0,00 | 0,00 | 0,00 | 0,00 | min. sensor scale |
| Hi.S | 1,60 | 3,00 | 10,00 | 16,00 | 25,00 | 40,00 | max sensor scale |
| oFS | 0 | 0 | 0 | 0 | 0 | 0 | offset of input correction |
| Lo.L | 0,00 | 0,00 | 0,00 | 0,00 | 0,00 | 0,00 | lower set-point setting |
| Hi.L | 1,60 | 3,00 | 10,00 | 16,00 | 25,00 | 40,00 | upper set-point setting |

| Out | |
|---|---|
| A1.r | 0 |
| … | |
| A1.t | 3 (mode AL1 =inverse-relative-normal) |
| … | |
| rL.1 | 2 (AL1) |
| rL.2 | 18 (open) |
| rL.3 | 19 (close) |
| rEL | 0 |
| A.ty | 9 (type of servocontrol command) |
| Ac.t | 12 (servocontrol running time: SQN72.4…/STA12..=12; SQM40.265=30) |
| t_Lo | 2 |
| t_Hi | 0.0 |
| t.on | 2 |
| t.oF | 0.0 |
| dE.b | 0,1 (dead zone in % of end scale) |

| PAS | 99 then push and keep pushed **F** until visualization of **Hrd** |
|---|---|
| | |
| **Hrd** | |
| … | |
| CtrL | 6 (PID warm) |
| AL.nr | 1 |
| but | 1 |
| diSP | 0 |
| Ld.1 | 1 |
| Ld.2 | 28 |
| Ld.3 | 20 |

Keep pushed **F** until you visualize **PASS**, release **F** and through the arrows set **99**, push **F** and visualize **Pro** (protection code) from **128**, through the arrows, bring it back to **12,** and keep **F** pushed until you come back to set-point value.

**Manual operation**:
Keep pushed the lower left key for at least 5 sec.
The instrument will enter the "MAN" mode (see also "Ld1" switching on).
Through the arrows, "Open" and "Close" outputs are activated.
To come back to normal working keep the lower left key pushed for at least 5 sec.

**Software switch off** :
By keeping pushed keys **Arrow up** + **F** for more than 5 sec. the instrument switches off the software, does not command the outputs and visualize only the variable of process measured by the probe.
To restore keep pushed **F** for more than 5 sec.

## Set -up for thermocouples type K or J

Verify wiring of the sensor

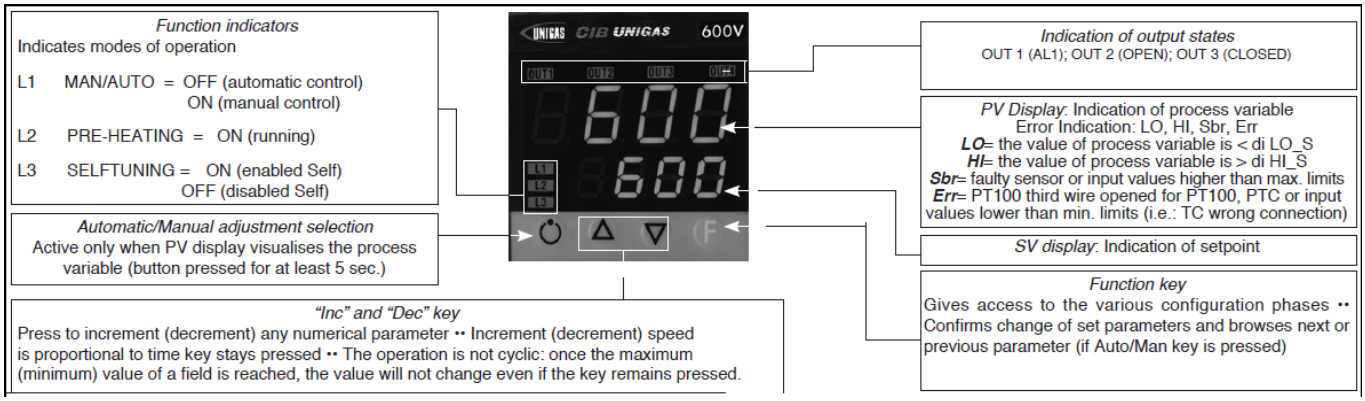


Regulation of the set-point = **80**
It can be modified by using arrows "up" and "down".
By pushing **F** you go to parameters:

| | |
|---|---|
| Hy.P | 10 (hysteresis positive for output 1 terminals 21-22 (ex Q13-Q14) |
| Hy.n | -5 (hysteresis negative for output 1 terminals 21-22 (ex Q13-Q14) |

Keep pushing **F** until you see **PASS**, release **F** and through the arrows set **99**, push **F** and visualize **Pro** (protection code) default is **12**, through the arrows set **128** and push **F,** keep it pushed until all parameters **InF**, **CFG**, **InP**, **Out**, **PASS** are visualized.

| **CFG** | |
|---|---|
| S.tun | 0 |
| hPb | 1,2 |
| hIt | 5,83 |
| hdt | 1,33 |
| … | |

| **InP** | |
|---|---|
| …. | |
| tyP | 2 (thermocouple **K** 0÷1300°C) / 0 (thermocouple **J** 0÷1000°C) |
| … | |
| dP_S | 0 (no decimal) / 1 (1 decimal) |
| Lo.S | 0 (min. sensor scale) |
| Hi.S | 1300 (max sensor scale for tc **K**) / 1000 (max sensor scale for tc **J**) |
| oFS | 0 (offset of input correction) |
| Lo.L | 0 (lower set-point range limit) |
| Hi.L | 1300 (upper set-point range limit) per tc **K** / 1000 for tc **J** |

| **Out** | |
|---|---|
| A1.r | 0 |
| … | |
| A1.t | 3 (mode AL1 =inverse-relative-normal) |
| … | |
| rL.1 | 2 (AL1) |
| rL.2 | 18 (open) |
| rL.3 | 19 (close) |
| rEL | 0 |
| A.ty | 9 (type of servocontrol command) |
| Ac.t | 12 (servocontrol running time: SQN72.4…/STA12..=12; SQM40.265=30) |
| t_Lo | 2 |
| t_Hi | 0.0 |
| t.on | 2 |
| t.oF | 0.0 |
| dE.b | 0,1 (dead zone in % of end scale) |

| **PAS** | 99 then push and keep pushed **F** until visualization of **Hrd** |
|---|---|
| | |
| **Hrd** | |
| … | |
| CtrL | 6 (PID warm) |
| AL.nr | 1 |
| but | 1 |
| diSP | 0 |
| Ld.1 | 1 |
| Ld.2 | 28 |
| Ld.3 | 20 |

Keep pushed **F** until you visualize **PASS**, release **F** and through the arrows set **99**, push **F** and visualize **Pro** (protection code) from **128**, through the arrows, bring it back to **12,** and keep **F** pushed until you come back to set-point value.

**Manual operation**:
Keep pushed the lower left key for at least 5 sec.
The instrument will enter the "MAN" mode (see also "Ld1" switching on).
Through the arrows, "Open" and "Close" outputs are activated.
To come back to normal working keep the lower left key pushed for at least 5 sec.

**Software switch off** :
By keeping pushed keys **Arrow up** + **F** for more than 5 sec. the instrument switches off the software, does not command the outputs and visualize only the variable of process measured by the probe.
To restore keep pushed **F** for more than 5 sec.

# RWF50.2x & RWF50.3x

***User manual***

M12922CB Rel.1.0 07/2012

**DEVICE INSTALLATION**

Install the device using the relevant tools as shown in the figure.
To wire the device and sensors, follow the instructions on the burner wiring diagram.

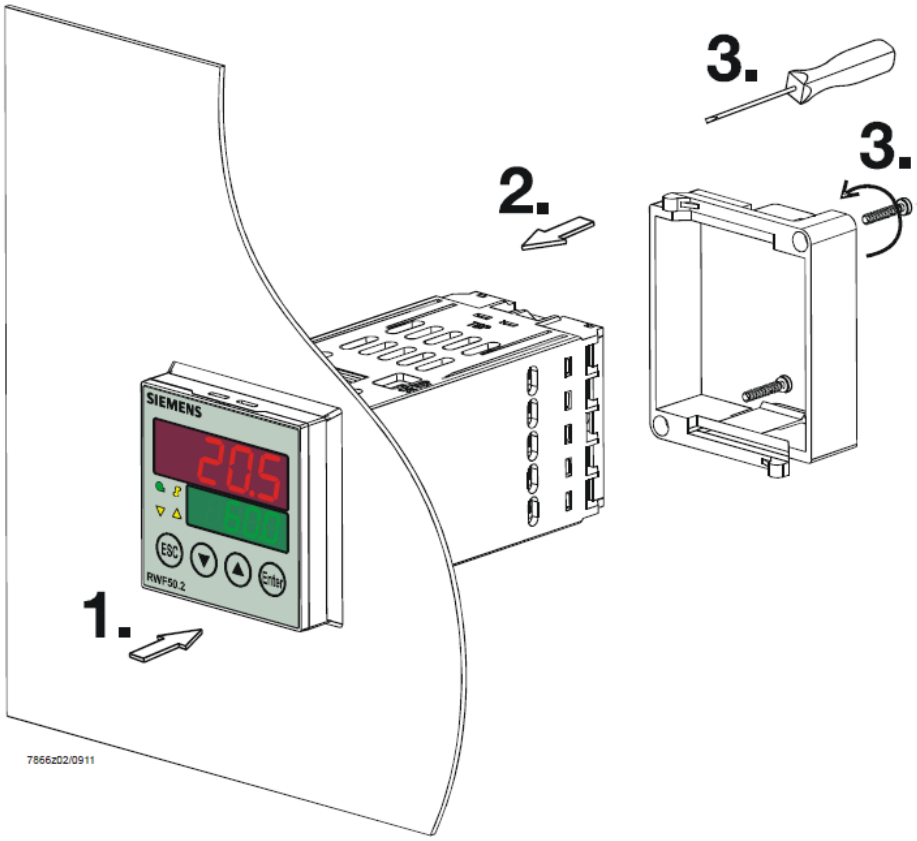


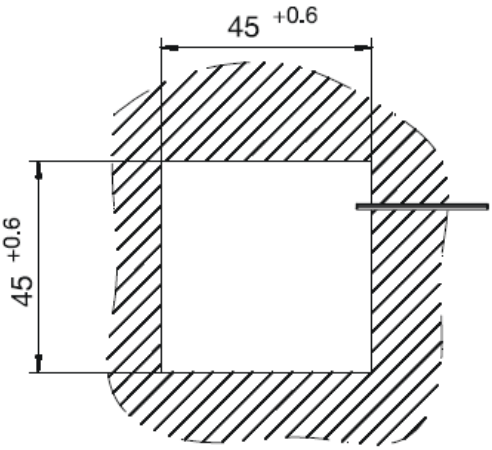

## FRONT PANEL

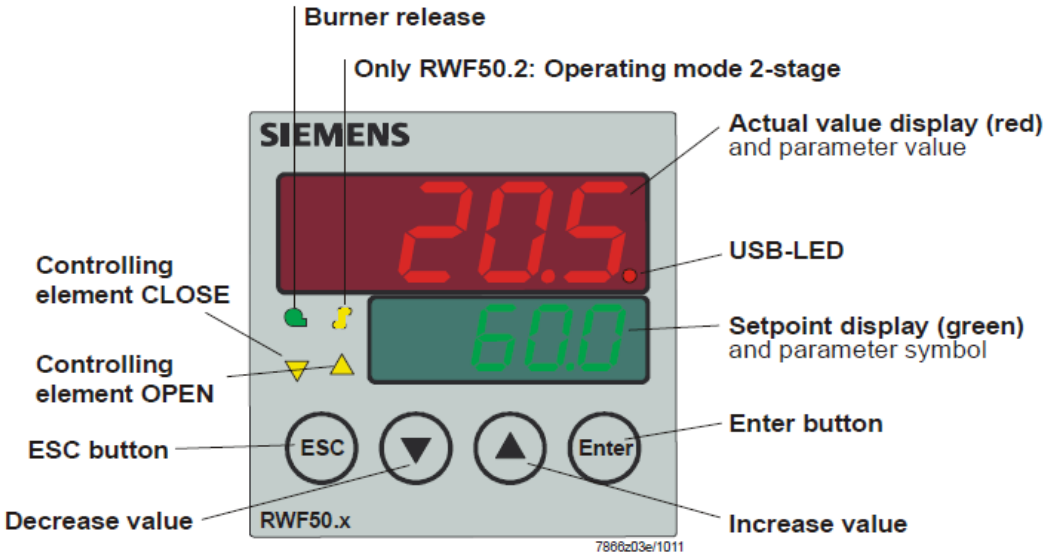


## NAVIGATION MENU

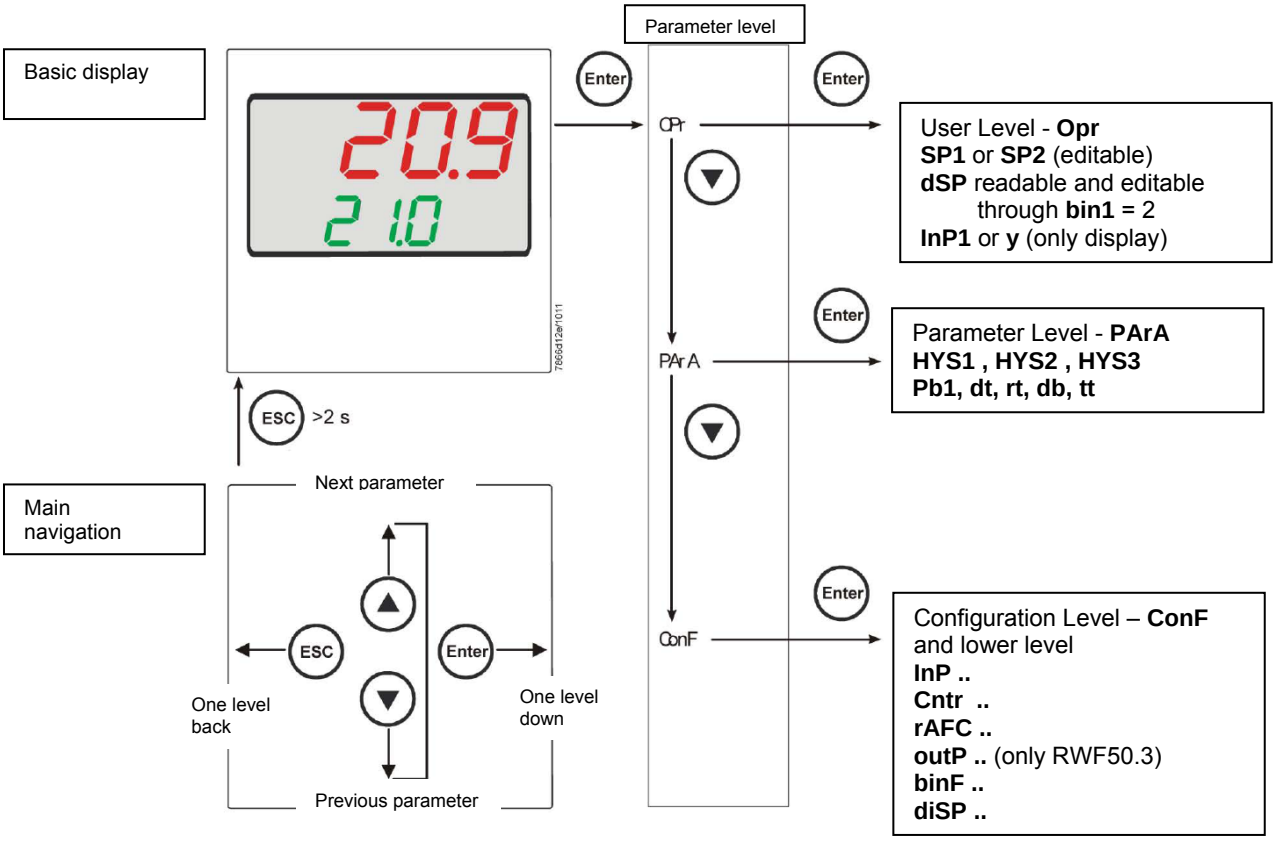

RWF5 is preset good for 90% of applications. However, you can set or edit parameters as follow:

**Set-point: set or modification:**
When the burner is in stand-by, (safety loop open, that is terminals 3-4/T1-T2 on the 7 pole plug open) push the **Enter** button: on the lower display (green) **Opr** appears; push **Enter** again and in the same display **SP1** appears. Push **Enter** again and the lower display (green **SP1**) flashes. Using the **up and down arrows** change the set-point on the upper display (red).Push **Enter** to confirm and push **ESC** more times to get the home position.

**PID parameters set and modifications (see table below):**

- Push **Enter** button, on the green display **Opr** appears; using the **down arrow,** scroll until group **PArA** is reached and push **Enter**.
- on the green display **Pb1** e appears and on the red one the set parameter.
- Push is sequence the **down or up** arrow the menu is scrolled.
- Push **Enter** to select and the **arrows** to choose the desired value. **Enter** to confirm.

| Parameter | Display | Range | Factory setting | Remarks |
|---|---|---|---|---|
| Proportional band | PB.1 | 1… 9999 digit | 10 | Typical value for temperature |
| Derivative action | dt | 0… 9999 sec. | 80 | Typical value for temperature |
| Integral action | rt | 0… 9999 sec. | 350 | Typical value for temperature |
| Dead band (*) | db | 0… 999,9 digit | 1 | Typical value |
| Servocontrol running time | tt | 10… 3000 sec. | 15 | Set servocontrol running time |
| Switch-on differential (*) | HYS1 | 0,0… -1999 digit | -5 | Value under setpoint below which the burner switches back on (1N-1P closes) |
| Switch-off differential 2° stage (*) | HYS2 | 0,0 … HYS3 | 3 | (enable only with parameter **bin1** = 4) |
| Upper switch-off differential (*) | HYS3 | 0,0… 9999 digit | 5 | Value over setpoint above which the burner switches off (1N-1P opens) |
| Switch-on differential on cooling controller (*) | HYS4 | 0,0… 9999 digit | 5 | Do not used (enable only with parameter **CACt** = 0) |
| Switch-off differential 2° stage on cooling controller (*) | HYS5 | HYS6…0,0 digit | 5 | Do not used (enable only with parameters **CACt** = 0 and **bin1** = 4) |
| Upper switch-off differential on cooling controller (*) | HYS6 | 0,0… -1999 digit | 5 | Do not used (enable only with parameter **CACt** = 0) |
| Delay modulation | q | 0,0… 999,9 digit | 0 | Do not alter |

(*)Parameters affected by setting of decimal place (**ConF > dISP** parameter **dECP**)

**Setting the kind of sensor to be connected to the device:**

- push the **Enter** button: on the lower display (green) **Opr** appears. Using the **up and down arrows** find **ConF.** Push **Enter** to confirm.
- Now on the green display the group **InP** appears. Push **Enter** and **InP1** is displaied. Enter to confirm.
- You are inside **InP1**; the green display shows **Sen1 (sensor type)**, while the red display shows the chosen sensor code
- Push **Enter** to enter the **Sen1** parameter, then choose the desired sensor using the **arrows.** Push **Enter** to confirm and **ESC** to escape.
- Once selected the sensor, you can modify all the other parameters using **up and down arrows** according to the tables here below.

## ConF > InP >InP1

| Parameter | Value | Description |
|---|---|---|
| SEn1<br>type of sensor for analog input 1 | **1** | **Pt100 3 fili** |
| | 2 | Pt100 2 fili |
| | 3 | Pt1000 3 fili |
| | 4 | Pt1000 2 fili |
| | 5 | Ni1000 3 fili |
| | 6 | Ni1000 2 fili |
| | 7 | 0 ÷ 135 ohm |
| | 15 | 0 ÷ 20mA |
| | 16 | 4 ÷ 20mA |
| | 17 | 0 ÷ 10V |
| | 18 | 0 ÷ 5V |
| | 19 | 1 ÷ 5V |
| OFF1<br>sensor offset | -1999..**0**.. +9999 | Using the measured value correction (offset), a measured value can be corrected to a certain degree, either up or down |
| SCL1<br>scale low level | -1999..**0**.. +9999 | In the case of a measuring transducer with standard signal, the physical signal is assigned a display value here<br>(for input ohm, mA, V) |
| SCH1<br>scale high level | -1999..**100**.. +9999 | In the case of a measuring transducer with standard signal, the physical signal is assigned a display value here<br>(for input ohm, mA, V) |
| dF1<br>digital filter | 0…**0,6**…100 | Is used to adapt the digital 2nd order input filter<br>(time in s; 0 s = filter off) |
| Unit<br>temperature unit | **1**<br>2 | **1 = degrees Celsius**<br>2 = degrees Fahrenheit |

(**bold** = factory settings)

**Remark:**
RWF50.2 e RWF50.3 cannot be connected to thermocouples.
If thermocouples have to be connected, convert the signal to a 4-20 mA one and set the RWF accordingly.

## ConF > Cntr

| Parameter | Value | Description |
|---|---|---|
| CtYP<br>controller type | **1**<br>2 | **1 = 3-position controller (open-stop-close only RWF50.2)**<br>2 = continuative action controller (only RWF50.3) |
| CACt<br>control action | **1**<br>0 | **1 = heating controller**<br>0 = cooling controller |
| SPL<br>least value of the set-point range | -1999..**0**..+9999 | set-point limitation prevents entry of values outside the defined range |
| SPH<br>maximum value of the set-point range | -1999..**100**..+9999 | set-point limitation prevents entry of values outside the defined range |
| oLLo<br>set-point limitation start, operation limit low | **-1999**.... +9999 | lower working range limit |
| oLHi<br>set-point limitation end, operation limit high | -1999.... **+9999** | upper working range limit |

(**bold** = factory settings)

## ConF > rAFC

**Activation boiler shock termic protetion:**
RWF50.. can activate the thermal shock protection only on sites where the set-point is lower than 250°C and according to **rAL** parameter.

| Parameter | Value | Description |
|---|---|---|
| FnCT<br>function | **0**<br>1<br>2 | Choose type of range degrees/time<br>**0 = deactivated**<br>1 = Kelvin degrees/minute<br>2 = Kelvin degrees/hour |
| rASL<br>ramp rate | **0,0 …** 999,9 | Slope of thermal shock protection (only with functions 1 and 2) |
| toLP<br>tolerance band ramp | **0**…9999 | width of tolerance band (in K) about the set-point<br>**0 = tolerance band inactive**<br> 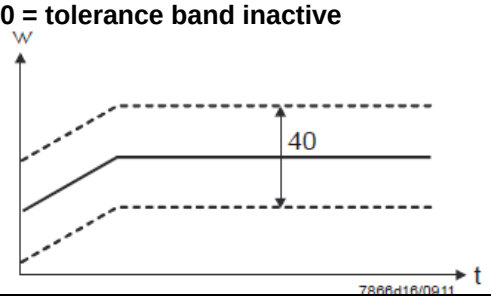 |
| rAL<br>ramp limit | **0**…250 | Ramp limit. When this value is lower than the temperature set-point, the RWF controls the output increasing the temp set point step by step according to rASL. If this is over the temp set point, the control is performed in cooling. |

(**bold** = factory settings)

## ConF > OutP (parameter under group only for RWF50.3)

| Parameter | Value | Description |
|---|---|---|
| FnCt<br>tipo di controllo | 1<br>**4** | 1 = analog input 1 doubling with possibility to convert (depending on par **SiGn**)<br>**4 = modulation controller** |
| SiGn<br>type of output signal | **0**<br>1<br>2 | physical output signal (terminals A+, A-)<br>**0 = 0÷20mA**<br>1 = 4÷20mA<br>2 = 0÷10V |
| rOut<br>Value when out of input range | **0**…101 | signal (in percent) when measurement range is crossed |
| oPnt<br>zero point | -1999…**0**..+9999 | value range of the output variable is assigned to a physical output signal Per default, the setting corresponds to 0...100% angular positioning for the controller outputs (terminals A+, A-) (effective only with **FnCt** = 1) |
| End<br>End value | -1999…**100**..+9999 | value range of the output variable is assigned to a physical output signal Per default, the setting corresponds to 0...100% angular positioning for the controller outputs (terminals A+, A-) (effective only with **FnCt** = 1) |

(**bold** = factory settings)

## ConF > binF

| Parameter | Value | Description |
|---|---|---|
| bin1<br>digital inputs<br>(terminals DG - D1) | **0**<br>1<br>2<br>4 | **0 = without function**<br>1 = set-point changeover (SP1 / SP2)<br>2 = set-point shift (**Opr** > **dSP** parameter = value of set-point modify)<br>4 = changeover of operating mode<br>open – modulating operation;<br>close – 2 stage operation. |

(**bold** = factory settings)

## ConF > dISP

| Parameter | Value | Description |
|---|---|---|
| diSU<br>upper display<br>(red) | 0<br>**1**<br>4<br>6<br>7 | display value for upper display:<br>0 = display power-off<br>**1 = analog input value**<br>4 = Controller's angular positioning<br>6 = set-point value<br>7 = end value with thermal shock protection |
| diSL<br>lower display<br>(green) | 0<br>1<br>4<br>**6**<br>7 | display value for lower display:<br>0 = display power-off<br>1 = analog input value<br>4 = Controller's angular positioning<br>**6 = set-point value**<br>7 = end value with thermal shock protection |
| tout<br>timeout | 0..**180**..250 | time (s) on completion of which the controller returns automatically to the basic display, if no button is pressed |
| dECP<br>decimal point | **0**<br>1<br>2 | **0 = no decimal place**<br>1 = one decimal place<br>2 = two decimal places |
| CodE<br>level lockout | **0**<br>1<br>2<br>3 | **0 = no lockout**<br>1 = configuration level lockout (ConF)<br>2 = Parameter and configuration level lockout (PArA & ConF)<br>3 = keyboard lockout |

(**bold** = factory settings)

**Manual control :**

- in order to manual change the burner load, while firing keep pushing the **ESC** button for more than 5 s; on the lower green display **Hand** appears.
- using the **UP** and **DOWN** arrows, the load varies.
- Keep pushing the **ESC** button for getting the normal operation again.
- **NB:** every ime the device shuts the burner down (start led switched off - contact 1N-1P open), the manual control is not active.

**Device self-setting (auto-tuning):**
If the burner in the steady state does not respond properly to heat generator requests, you can activate the Device's self-setting function, which recalculates PID values for its operation, deciding which are most suitable for the specific kind of request

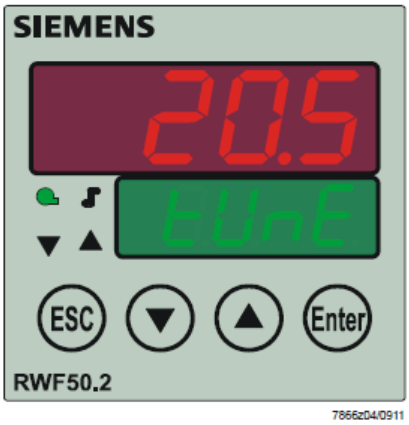


Follow the below instructions:
push the **UP** and **DOWN** arrows for more than 5 s; on the green lower display **TUNE** appears. Now the device pushes the burner to increase and decrease its output. During this time, the device calculates PID parameters (**Pb1, dt** and **rt**). After the calculations, the TUNE is automatically deactivated and the device has already stored them.
In order to stop the Auto-tuning function while it works, push again the **UP** and **DOWN** arrows for more than 5 s. The calculated PID parameters can be manually modified following the previously described instructions.

**Display of software version :**

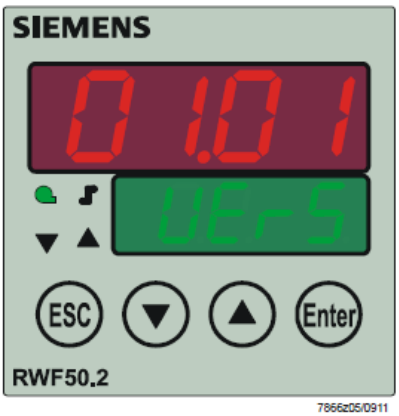


The software version is shown by pushing **Enter + UP arrow** on the upper display

**Electric connection :**

With 7 pins connector version

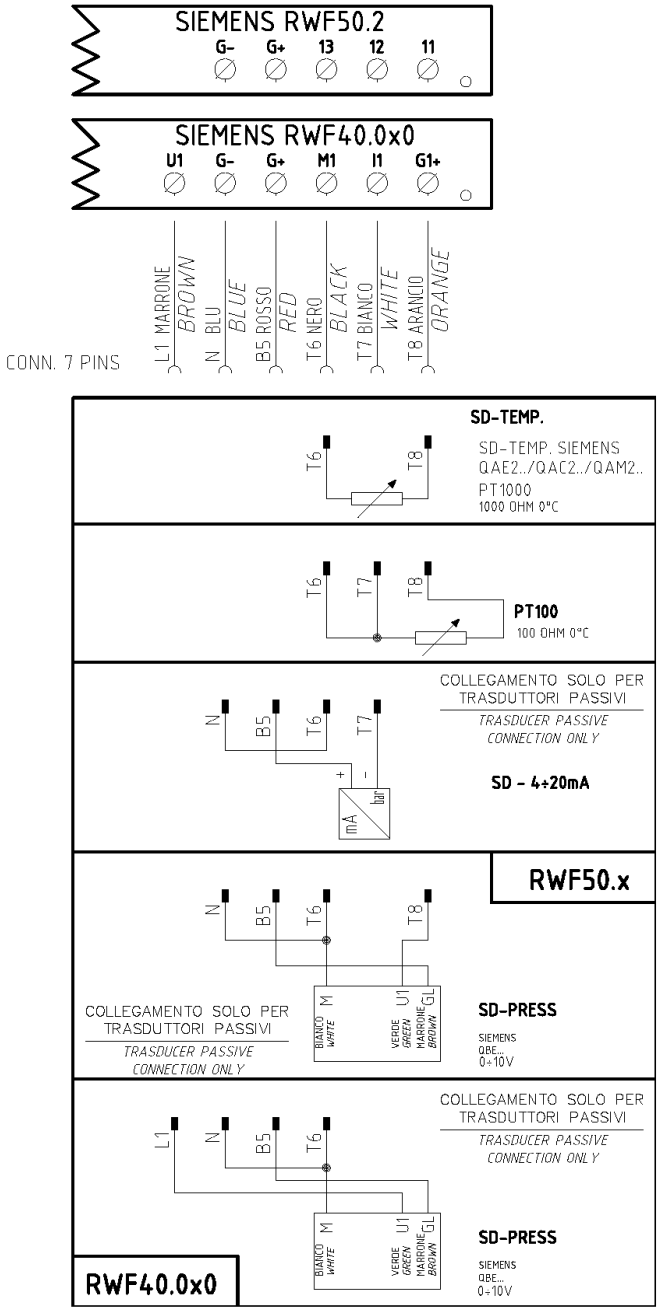


With terminals version

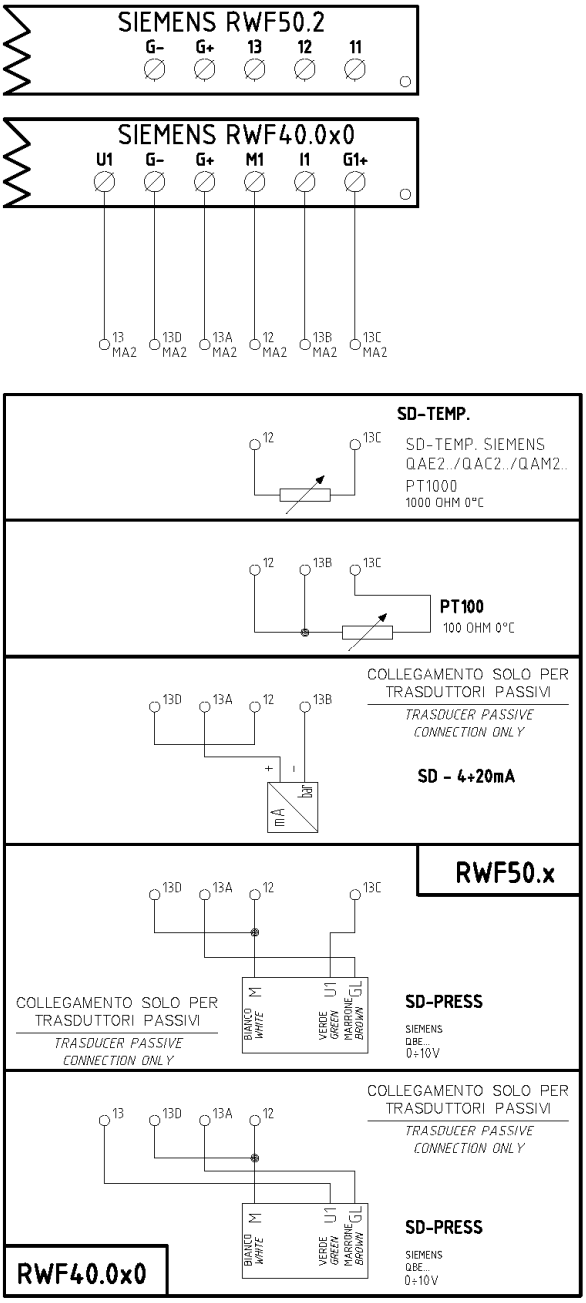


Matches terminals between RWF50.2 and RWF40.0x0

**Parameters summarising for RWF50.2x:**

| Navigation menù | Conf | | | | | Conf | | | | | | | | | |
|---|---|---|---|---|---|---|---|---|---|---|---|---|---|---|---|
| | Inp | | | | | | | | | | | | | | |
| | Inp1 | | | | | Cntr | | diSP | PArA | | | | | | Opr |
| **Types of probe** | **SEn1** | **OFF1** | **SCL1** | **SCH1** | **Unit** | **SPL** | **SPH** | **dECP** | **Pb. 1** | **dt** | **rt** | **tt** | **HYS1 (*)** | **HYS3 (*)** | **SP1 (*)** |
| Siemens QAE2120… | 6 | 0 | needless | needless | 1 | 30 | 95 | 1 | 10 | 80 | 350 | (#) | -5 | 5 | 80 °C |
| Siemens QAM2120.. | 6 | 0 | needless | needless | 1 | 0 | 80 | 1 | 10 | 80 | 350 | (#) | -2,5 | 2,5 | 40°C |
| Pt1000 (130°C max.) | 4 | 0 | needless | needless | 1 | 30 | 95 | 1 | 10 | 80 | 350 | (#) | -5 | 5 | 80°C |
| Pt1000 (350°C max.) | 4 | 0 | needless | needless | 1 | 0 | 350 | 1 | 10 | 80 | 350 | (#) | -5 | 10 | 80°C |
| Pt100 (130°C max.) | 1 | 0 | needless | needless | 1 | 0 | 95 | 1 | 10 | 80 | 350 | (#) | -5 | 5 | 80°C |
| Pt100 (350°C max) | 1 | 0 | needless | needless | 1 | 0 | 350 | 1 | 10 | 80 | 350 | (#) | -5 | 10 | 80°C |
| Probe 4÷20mA / 0÷1,6bar | 16 | 0 | 0 | 160 | needless | 0 | 160 | 0 | 5 | 20 | 80 | (#) | 0 | 20 | 100 kPa |
| Probe 4÷20mA / 0÷3bar | 16 | 0 | 0 | 300 | needless | 0 | 300 | 0 | 5 | 20 | 80 | (#) | 0 | 20 | 200 kPa |
| Probe 4÷20mA / 0÷10bar | 16 | 0 | 0 | 1000 | needless | 0 | 1000 | 0 | 5 | 20 | 80 | (#) | 0 | 50 | 600 kPa |
| Probe 4÷20mA / 0÷16bar | 16 | 0 | 0 | 1600 | needless | 0 | 1600 | 0 | 5 | 20 | 80 | (#) | 0 | 80 | 600 kPa |
| Probe 4÷20mA / 0÷25bar | 16 | 0 | 0 | 2500 | needless | 0 | 2500 | 0 | 5 | 20 | 80 | (#) | 0 | 125 | 600 kPa |
| Probe 4÷20mA / 0÷40bar | 16 | 0 | 0 | 4000 | needless | 0 | 4000 | 0 | 5 | 20 | 80 | (#) | 0 | 200 | 600 kPa |
| Siemens QBE2002 P4 | 17 | 0 | 0 | 400 | needless | 0 | 400 | 0 | 5 | 20 | 80 | (#) | 0 | 20 | 200 kPa |
| Siemens QBE2002 P10 | 17 | 0 | 0 | 1000 | needless | 0 | 1000 | 0 | 5 | 20 | 80 | (#) | 0 | 50 | 600 kPa |
| Siemens QBE2002 P16 | 17 | 0 | 0 | 1600 | needless | 0 | 1600 | 0 | 5 | 20 | 80 | (#) | 0 | 80 | 600 kPa |
| Siemens QBE2002 P25 | 17 | 0 | 0 | 2500 | needless | 0 | 2500 | 0 | 5 | 20 | 80 | (#) | 0 | 125 | 600 kPa |
| Siemens QBE2002 P40 | 17 | 0 | 0 | 4000 | needless | 0 | 4000 | 0 | 5 | 20 | 80 | (#) | 0 | 200 | 600 kPa |
| Segnale 0÷10V | 17 | 0 | to be fixed | to be fixed | needless | to be fixed | to be fixed | to be fixed | 5 | 20 | 80 | (#) | to be fixed | to be fixed | to be fixed |
| Segnale 4÷20mA | 16 | 0 | to be fixed | to be fixed | needless | to be fixed | to be fixed | to be fixed | 5 | 20 | 80 | (#) | to be fixed | to be fixed | to be fixed |

**NOTE** :
(#) tt – servo control run time
SQL33 ; STM30; SQM10; SQM40; SQM50; SQM54 = **30** (secondi) - STA12B3.41; SQN30.251; SQN72.4A4A20 = **12** (secondi)
(*)These values are factory set - values **must be** set during operation at the plant based on the real working temperature/pressure value.
**WARNING :** With pressure probes the parameters SP1, SCH, SCL, HYS1, HYS3 must be selected, and visualized in kPa (kilo Pascal). (1bar = 100.000Pa = 100kPa)

## APPENDIX: PROBES CONNECTION

To assure the utmost comfort, the control system needs reliable information, which can be obtained provided the sensors have been installed correctly. Sensors measure and transmit all variations encountered at their location.

Measurement is taken based on design features (time constant) and according to specific operating conditions.With wiring run in raceways, the sheath (or pipe) containing the wires must be plugged at the sensor's terminal board so that currents of air cannot affect the sensor's measurements.

**Ambient probes (or ambient thermostats)**

**Installation**

The sensors (or room thermostats) must be located in reference rooms in a position where they can take real temperature measurements without being affected by foreign factors.

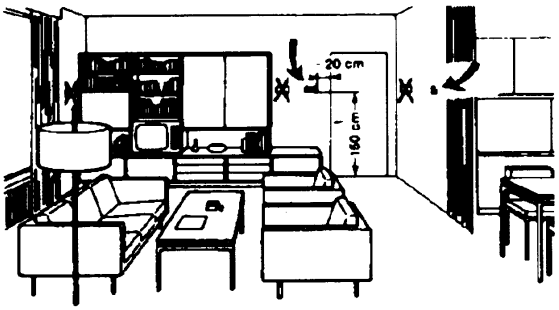


**It's good to be admired …even better to be effective**

Heating systems: the room sensor must not be installed in rooms with heating units complete with thermostatic valves. Avoid all sources of heat foreign to the system.

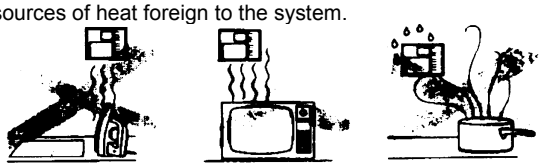

**Location**

On an inner wall on the other side of the room to heating unitsheight above floor 1.5 m, at least 1.5 m away from external sources of heat (or cold).

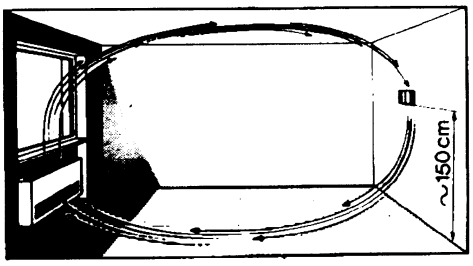


**Installation position to be avoided**

near shelving or alcoves and recesses, near doors or win-dows, inside outer walls exposed to solar radiation or currents of cold air, on inner walls with heating system pipes, domestic hot water pipes, or cooling system pipes running through them.

**Outside probes (weather)**

**Installation**

In heating or air-conditioning systems featuring adjustment in response to outside temperature, the sensor's positioning is of paramount importance.

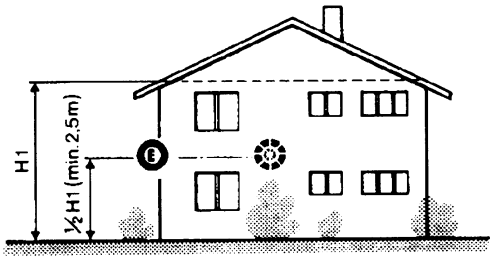


**General rule:** on the outer wall of the building where the living rooms are, never on the south-facing wall or in a position where they will be affected by morning sun. If in any doubt, place them on the north or north-east façade.

**Positions to be avoided**

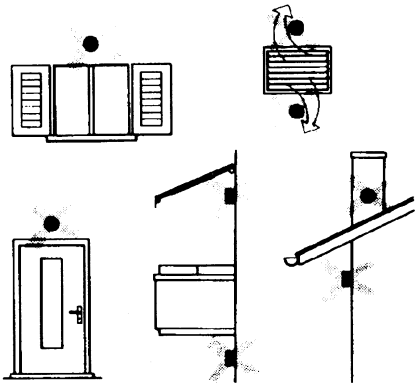

Avoid installing near windows, vents, outside the boiler room, on chimney breasts or where they are protected by balconies, cantilever roofs.

**The sensor must not be painted (measurement error).**

**Duct or pipe sensors**

**Installing temperature sensors**

For measuring outlet air:

- after delivery fan or
- after coil to be controlled, at a distance of at least 0,5 m

For measuring room temperature:

- before return air intake fan and near room's return airintake. For measuring saturation temperature: after mist eliminator.

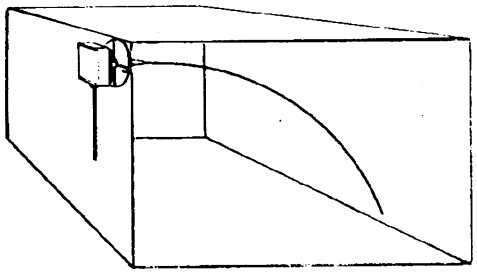

Bend 0.4m sensor by hand (never use tools) as illustrated.

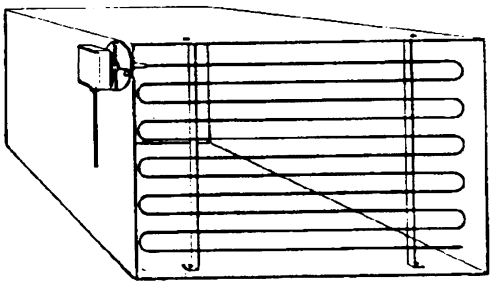

Use whole cross-section of duct, min. distance from walls 50 mm, radius of curvature 10 mm for 2m or 6m sensors.

**Installing combined humidity sensors**

As max. humidity limit sensor on outlet (steam humidifiers).

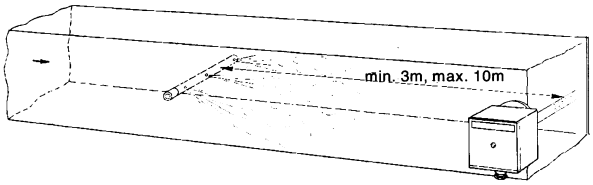


**Installing pressure sensors**

A - installation on ducts carrying fluids at max. temperature 80°C

B - installation on ducts at temperature over 80°C and for refrigerants

C - installation on ducts at high temperatures:

- increase length of siphon
- place sensor at side to prevent it being hit by hot air coming from the pipe.

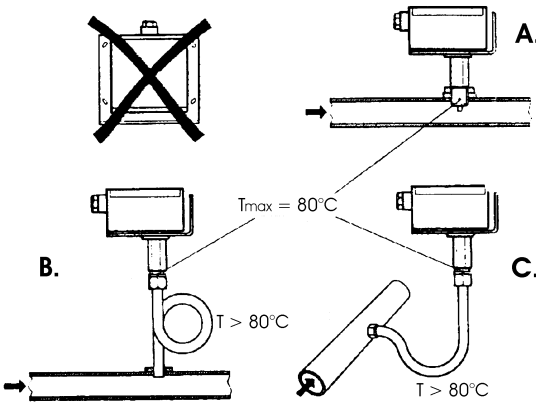


**Installing differential pressure sensors for water**

- Installation with casing facing down not allowed.-With temperature over 80°C, siphons are needed.
- To avoid damaging the sensor, you must comply with the following instructions

**when installing:**

- make sure pressure difference is not greater than thevalue permitted by the sensor
- when there are high static pressures, make sure you insert shutoff valves A-B-C.

**Putting into operation**

Start disable

1=open C1=open C

2=open A2=close B

3=open B3=close A

4= close C

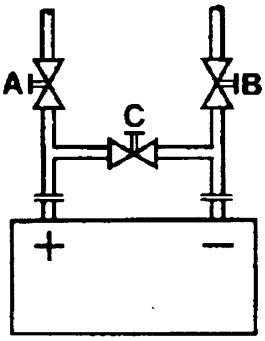

**Immersion or strap-on sensors**

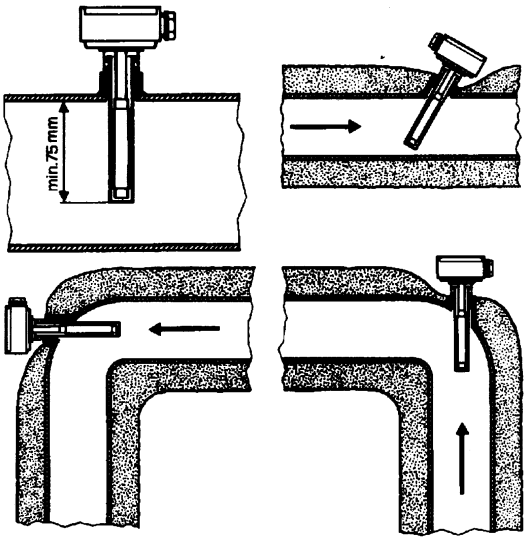


**Immersion probes installation**

Sensors must be installed on the stretch of pipe in which fluid circulates all the time.

The rigid stem (sensing element doing the measuring) must be inserted by at least 75mm and must face the direction of flow.

Recommended locations: on a bend or on a straight stretch of pipe but tilted by 45° and against the flow of fluid.

Protect them to prevent water from infiltrating (dripping gates, condensation from pipes etc.)

**Installing QAD2.. strap-on sensors**

Make sure fluid is circulating in the chosen location.

Eliminate insulation and paintwork (including rust inhibitor) on a min. 100mm length of pipe.

Sensors come with straps for pipes up to 100 mm in diameter

**Placing the probes (QAD22.../QAE21.../QAP21.../RCA...)**

**With pumps on outlet**

**with 3 ways valves / with 4 ways valves**

**Panel system / burner control**

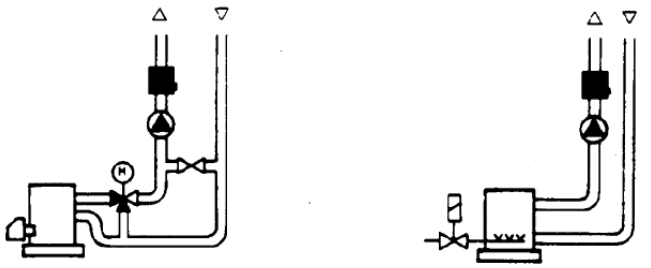

**With pumps on return**

**with 3 ways valves / with 4 ways valves**

**Strap-on or immersion sensors?**

**QAD2.. strap-on sensors**

Advantages :

- 10 sec. time constant
- Installed with system running (no plumbing work)
- Installation can be changed easily if it proves incorrect.

Limits:

- Suitable for pipe diameters max. 100 mm
- Can be affected by currents of air etc.

**QAE2... immersion sensors**

Advantages:

- Measure "mean" fluid temperature
- No external influence on measurement such as: currents of air, nearby pipes etc.

Limits:

- Time constant with sheath: 20 sec.
- Hard to change installation position if it proves incorrect.

**Installing differential pressure probes for air**

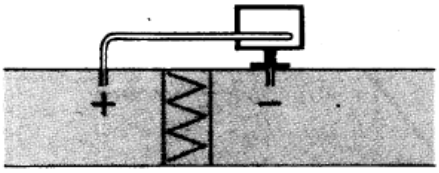


**A - Control a filter (clogging)**

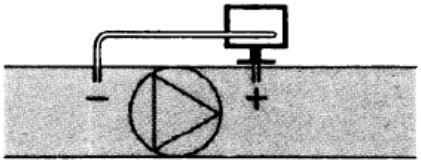


**B - Control a fan (upstream/downstream)**

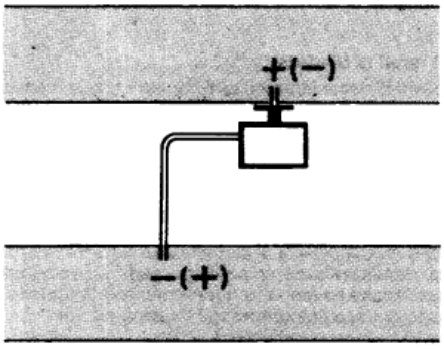


**C - Measurement of difference in pressure between two ducts**

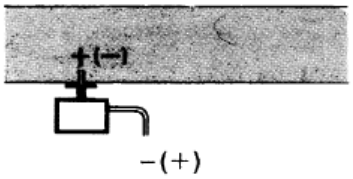


**D - Measurement of difference in pressure between two rooms or of inside of duct and outside**

**Basic principles**

**Measuring static pressure(i.e. pressure exerted by air on pipe walls)**

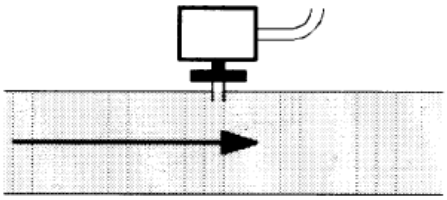

**Measuring dinamic pressure**

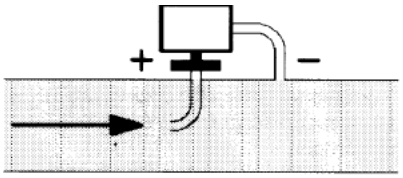


$$Pd = \frac{y\,\vartheta^2}{2g}$$

**Key**

| | |
|---|---|
| y | $Kg/m^3$, specific weight of air |
| □ | m/s, air speed |
| g | 9.81 $m/s^2$ gravity acceleration |
| Pd | mm C.A., dynamic pressure |

**Measuring total pressure**

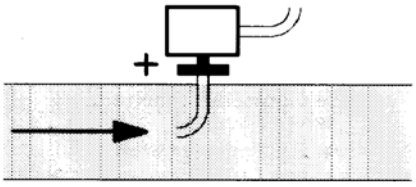

**Spare parts**

| Description | Code |
|---|---|
| Modulator  RWF50.2 (uscita a 3 punti - apri, fermo, chiudi) | 2570148 |
| Modulator  RWF50.3 (uscita continua 0÷20mA, 4÷20mA, 0÷10V) | 2570149 |
| Temperature probe Siemens QAE2120.010A (30÷130°C) | 2560101 |
| Temperature probe Siemens QAM2120.040 (-15÷+50°C) | 2560135 |
| Thermoresistor Pt1000 ø6mm L100mm (30÷130°C) | 2560188 |
| Thermoresistor Pt1000 ø10mm L200mm (0÷350°C) | 2560103 |
| Thermoresistor Pt100 ø10mm L200mm (0÷350°C) | 2560145 |
| Thermoresistor Pt100 ø8mm L85mm (0÷120°C) | 25601C3 |
| Pressure probe Siemens QBE2.. P4 (0÷4bar) | 2560159 |
| Pressure probe Siemens QBE2.. P10 (0÷10bar / signal 0÷10V) | 2560160 |
| Pressure probe Siemens QBE2.. P16 (0÷16bar / signal 0÷10V) | 2560167 |
| Pressure probe Siemens QBE2.. P25 (0÷25bar / signal 0÷10V) | 2560161 |
| Pressure probe Siemens QBE2.. P40 (0÷40bar / signal 0÷10V) | 2560162 |
| Pressure probe Danfoss MBS 3200 P 1,6 (0÷1,6bar / signal 4÷20mA) | 2560189 |
| Pressure probe Danfoss MBS 3200 P 10 (0÷10bar / signal 4÷20mA) | 2560190 |
| Pressure probe Danfoss MBS 3200 P 16 (0÷16bar / signal 4÷20mA) | 2560191 |
| Pressure probe Danfoss MBS 3200 P 25 (0÷25bar / signal 4÷20mA) | 2560192 |
| Pressure probe Danfoss MBS 3200 P 40 (0÷40bar / signal 4÷20mA) | 2560193 |
| Pressure probe Siemens 7MF1565-3BB00-1AA1 (0÷1,6bar / signal 4÷20mA) | 25601A3 |
| Pressure probe Siemens 7MF1565-3CA00-1AA1 (0÷10bar / signal 4÷20mA) | 25601A4 |
| Sonda di pressione Siemens 7MF1565-3CB00-1AA1 (0÷16bar / signal | 25601A5 |
| Pressure probe Siemens 7MF1565-3CD00-1AA1 (0÷25bar / signal 4÷20mA) | 25601A6 |
| Pressure probe Siemens 7MF1565-3CE00-1AA1 (0÷40bar / signal 4÷20mA) | 25601A7 |
| Pressure probe Gefran E3E B1V6 MV (0÷1,6bar / segnale 4÷20mA) | 25601C4 |
| Pressure probe Danfoss E3E B01D MV (0÷10bar / segnale 4÷20mA) | 25601C5 |
| Pressure probe Danfoss E3E B16U MV (0÷16bar / segnale 4÷20mA) | 25601C6 |
| Pressure probe Danfoss E3E B25U MV (0÷25bar / segnale 4÷20mA) | 25601C7 |
| Pressure probe Danfoss E3E B04D MV (0÷40bar / segnale 4÷20mA)) | 25601C8 |

Note: Specifications and data subject to change. Errors and omissions excepted.

# KM3 Modulator

**USER MANUAL**

M12927CA Rel.1.0 10/2020

## MOUNTING

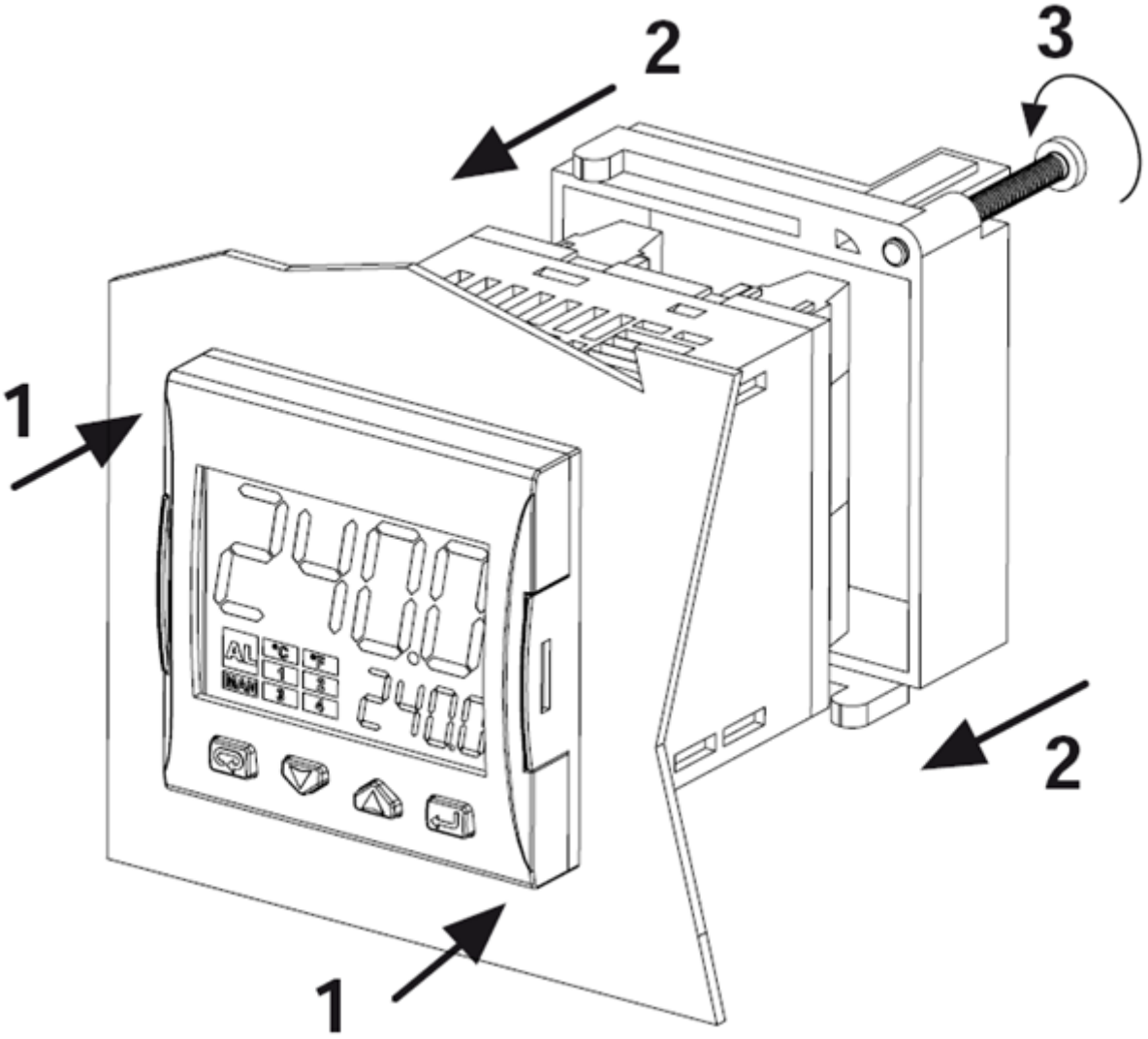

## DISPLAY AND KEYS

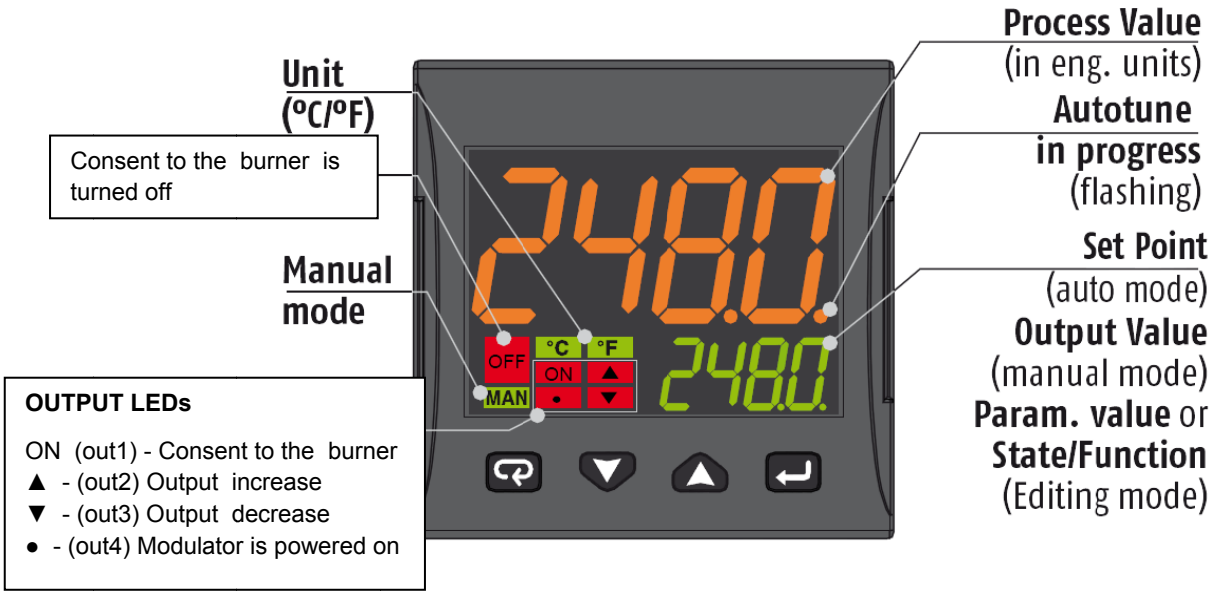


| | Operator Mode | Editing Mode |
|---|---|---|
| ↵ | Access to:<br>- Operator Commands<br>(Timer, Setpoint selection ...)<br>- Parameters<br>- Configuration | Confirm and go to<br>Next parameter |
| ▲ | Access to:<br>- Operator additional information<br>(Output value, running time ...) | Increase the displayed value or select the next element of the parameters list |
| ▼ | Access to:<br>- Set Point | Decrease the displayed value or select the previous element |
| ↻ | Programmable key:<br>Start the programmed function<br>(Autotune, Auto/Man, Timer ...) | Exit from Operator commands/Parameter setting/Configuration |

## CONNECTIONS DIAGRAM

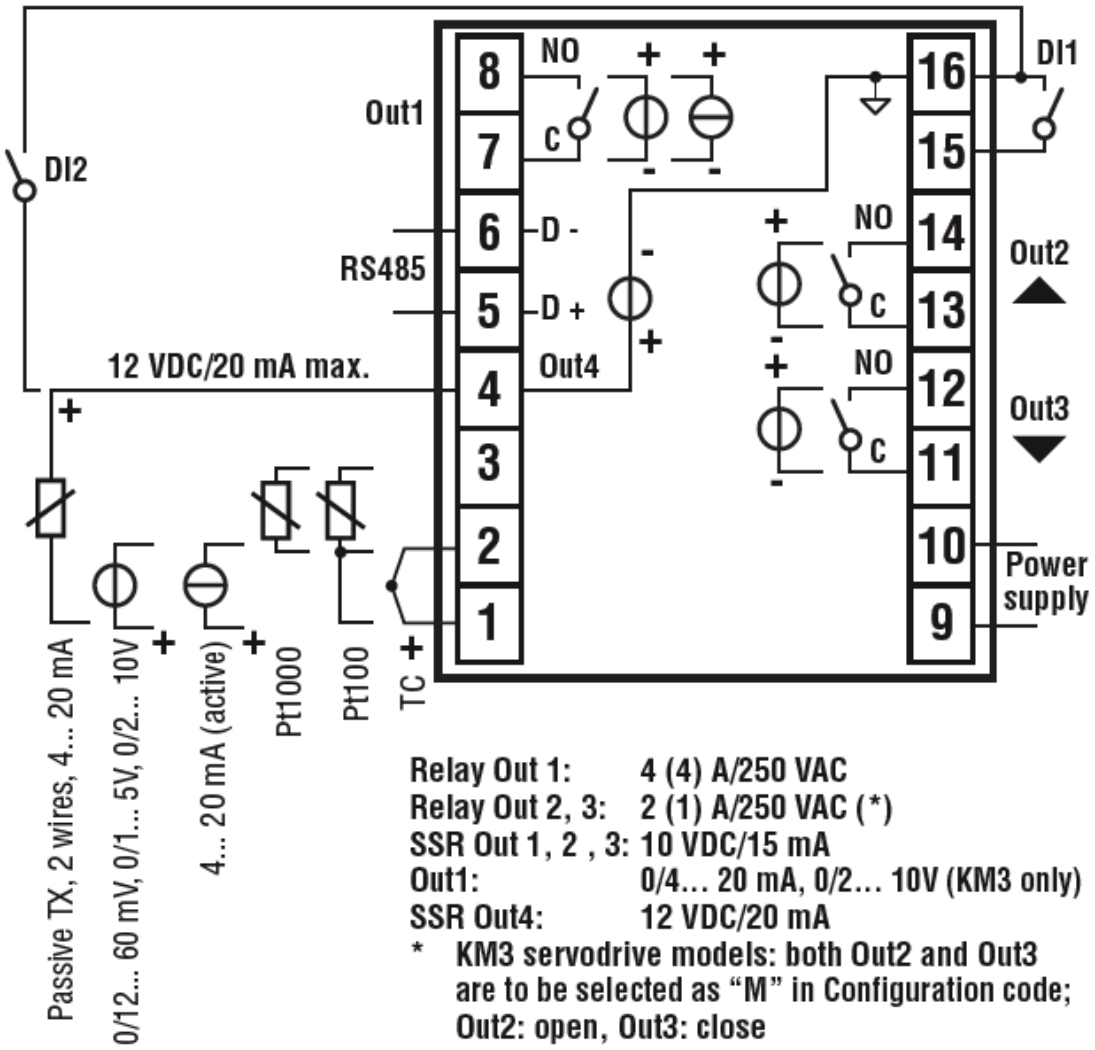


### *Probe connection:*

- **PT1000/NTC/PTC**: between terminal 3 and 2
- **PT 100**: between terminal 3 and 2 with terminal 1
- **Passive pressure probe** 0/4-20 mA: between terminal 4 ( + ) e 1 ( - )
  Note: out4 must be activated ( IO4F must be setted to ON )
- **Powered pressure probe** 0/4-20 mA between terminal 4 (power supply), 2 ( negative) e 1 (positive)
  Note: set IO4F to ON to activate Out4

### *Power supply connection:*

- **Neutral wire:** terminal 9
- **Phase:** terminal 10 ( 100…240 Vac )
- Close terminals 15-16 to switch to the set point 2

### *Output connection:*

- **Channel 1:** terminal 7 and 8 ( burner on – off )
- **Channel 2:** terminal 11 and 12 (servomotor opens)
- **Channel 3:** terminal 13 and 14 (servomotor closes)

## SETPOINT AND HYSTERESIS CONFIGURATION (SP, AL1, HAL1 parameters)

Push the ↵ button to enter into the setpoint configuration:

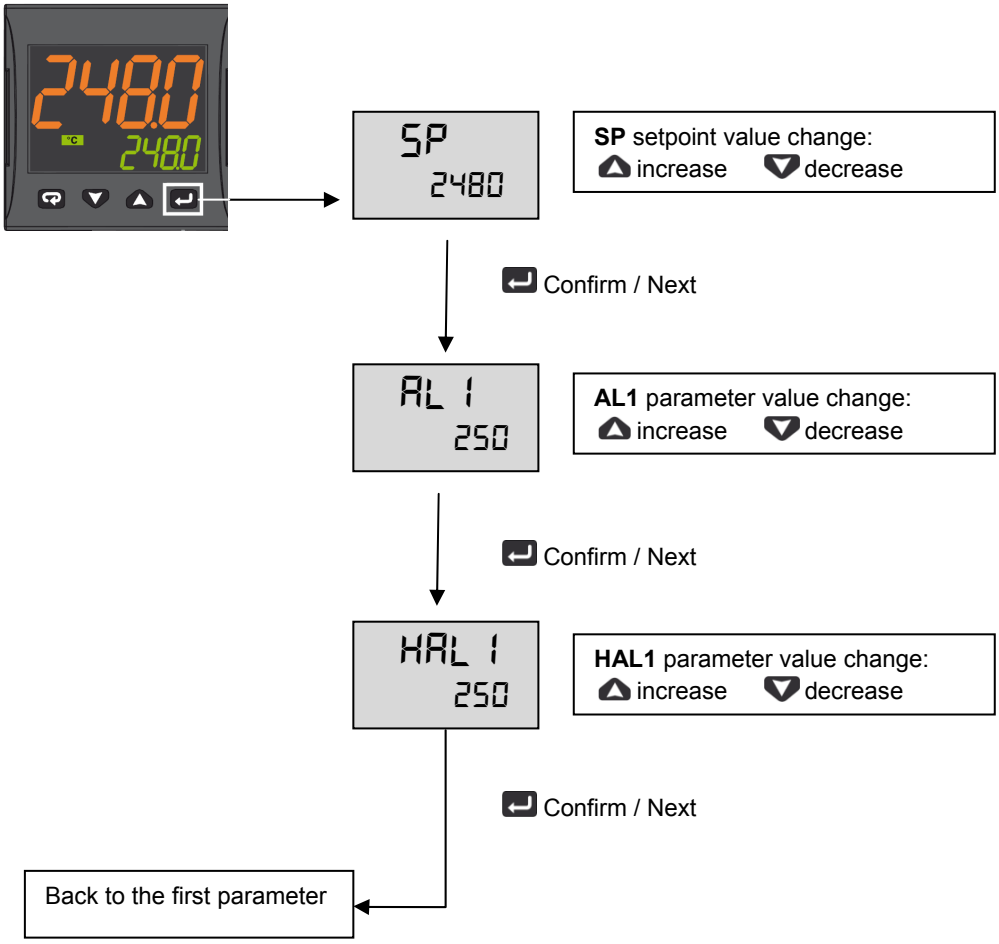


To return to normal mode, press the key for 3 seconds or wait the 10s timeout

### *Operation example*

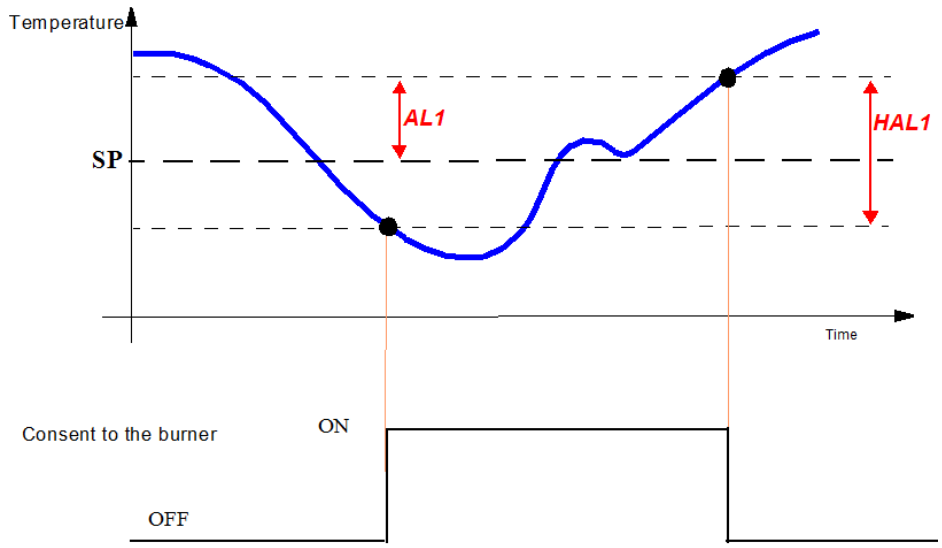

## LIMITED ACCESS LEVEL

Proceed as follows to change some parameters that are not visible in standard user mode:

Press the ↵ key for 3 seconds

Password = 20

Access to parameter:

| | |
|---|---|
| ▲ | Increase the displayed value |
| ▼ | Decrease the displayed value |
| ↵ | Confirm and go to next parameter |

| Param | Description | Values | Default |
|---|---|---|---|
| SEnS | Input type | Pt1 = RTD Pt100<br>Pt10 = RTD Pt1000<br>0.20 = 0..20mA<br>4.20 = 4..20mA Pressure probe<br>0.10 = 0..10V<br>2.10 = 2..10V<br>crAL= Thermocouple K | Depends on the probe |
| SP | Set point 1 | SPLL ... SPLH | See page 7 |
| AL1 | AL1 threshold | AL1L... AL1H (E.U.) | |
| HAL1 | AL1 hysteresis | 1... 9999 (E.U.) | |
| Pb | Proportional band | 1... 9999 (E.U.) | |
| ti | Integral time | 0 (oFF) ... 9999 (s) | |
| td | Derivative time | 0 (oFF) ... 9999 (s) | |
| Str.t | Servomotor stroke time | 5...1000 seconds | |
| db.S | Servomotor dead band | 0...100% | |
| SPLL | Minimum set point value | -1999 ... SPHL | |
| SPHL | Maximum set point value | SPLL ... 9999 | |
| dp | Decimal point position | 0... 3 | |
| SP 2 | Set point 2 | SPLL...SPLH | 60 |
| A.SP | Selection of the active set point | "SP" ... " nSP" | SP |

To exit the parameter setting procedure press the key (for 3 s) or wait until the timeout expiration (about 30 seconds)

## Probe parameters configuration MODULATORE ASCON KM3

| Parameter Group | inP | | | | | | AL1 | | rEG | | | | | SP | | |
|---|---|---|---|---|---|---|---|---|---|---|---|---|---|---|---|---|
| **Parameter** | **Sens** | **dp** | **SSC** | **FSc** | **unit** | **IO4.F (**)** | **AL1 (***)** | **HAL1 (***)** | **Pb (***)** | **ti (***)** | **td (***)** | **Str.t** | **db.S** | **SPLL** | **SPHL** | **SP (***)** |
| Probes | | Dec Point | Scale Min | Scale Max | | | Off | On | p | i | d | servo time s | Band Mo. | SP Min | SP Max | Set point |
| Pt1000 (130°C max) | Pt10 | 1 | | | °C | on | 5 | 10 | 10 | 350 | 1 | * | 5 | 30 | 95 | 80 |
| Pt1000 ( 350°C max) | PT10 | 1 | | | °C | on | 10 | 10 | 10 | 350 | 1 | * | 5 | 0 | 350 | 80 |
| Pt100 (130°C max) | PT1 | 1 | | | °C | on | 5 | 10 | 10 | 350 | 1 | * | 5 | 0 | 95 | 80 |
| Pt100 (350°C max) | Pt1 | 1 | | | °C | on | 10 | 10 | 10 | 350 | 1 | * | 5 | 0 | 350 | 80 |
| Pt100 (0÷100°C 4÷20mA) | 4.20 | 1 | 0 | 100 | | on | 5 | 10 | 10 | 350 | 1 | * | 5 | 0 | 95 | 80 |
| Thermocouple K (1200°C max) | crAL | 0 | | | °C | on | 20 | 25 | 10 | 350 | 1 | * | 5 | 0 | 1200 | 80 |
| Thermocouple J (1000°C max) | J | 0 | | | °C | on | 20 | 25 | 10 | 350 | 1 | * | 5 | 0 | 1000 | 80 |
| 4-20mA / 0-1,6barPressure probe | 4.20 | 0 | 0 | 160 | | on | 20 | 20 | 5 | 120 | 1 | * | 5 | 0 | 160 | 100 |
| 4-20mA / 0-10bar Pressure probe | 4.20 | 0 | 0 | 1000 | | on | 50 | 50 | 5 | 120 | 1 | * | 5 | 0 | 1000 | 600 |
| 4-20mA / 0-16bar Pressure probe | 4.20 | 0 | 0 | 1600 | | on | 80 | 80 | 5 | 120 | 1 | * | 5 | 0 | 1600 | 600 |
| 4-20mA / 0-25bar Pressure probe | 4.20 | 0 | 0 | 2500 | | on | 125 | 125 | 5 | 120 | 1 | * | 5 | 0 | 2500 | 600 |
| 4-20mA / 0-40bar Pressure probe | 4.20 | 0 | 0 | 4000 | | on | 200 | 200 | 5 | 120 | 1 | * | 5 | 0 | 4000 | 600 |
| QBE2002 / 0-25bar Pressure probe | 0.10 | 0 | 0 | 2500 | | 0n | 125 | 125 | 5 | 120 | 1 | * | 5 | 0 | 2500 | 600 |

Note:

(*) Str.t - Servomotor stroke time
SQL33; STM30; SQM10; SQM40; SQM50; SQM54 = 30 (Seconds)
STA12B3.41; SQN30.251; SQN72.4A4A20 = 12 (Seconds)

**(**) Out 4 … on Display led °4 must be switched on, otherwise change the io4.F parameter value from "on" to "out4", confirm the value, quit the configuration mode then change again the io4.F parameter value from "out4" to "on".**

(***) Factory settings. These values must be adapted to machine conditions

N.B. For pressure probe, SP, SPHL, SPLL parameters values are expressed in Kpa (1 bar = 100 Kpa).

# CONFIGURATION

## *How to access configuration level*

The configuration parameters are collected in various groups. Every group defines all parameters related with a specific function (e.g.: control, alarms, output functions).

1. Push the button for more than 5 seconds. The upper display will show PASS while the lower display will show 0.
2. Using and buttons set the programmed password.
   According to the entered password, it is possible to see a part of the parameters listed in the "configuration parameters" section.
   a. Enter "**30**" as password to view all the configuration parameters
   b. Enter "**20**" as password to view the parameters of the "limited access level". At this point, only the parameters with attribute **Liv = A** or **Liv = O** will be editable.
   c. Leave the password blank to edit "user level" parameters, that are identified by attribute **Liv = O**
3. Push the button. If the password is correct the display will show the acronym of the first parameter group preceded by the symbol: . In other words the upper display will show: inP (group of the **Input parameters**).

The instrument is in configuration mode. To press for more than 5 seconds, the instrument will return to the "standard display.

**Keyboard functions during parameter changing:**

| | **Operator Mode** |
|---|---|
| | When the upper display is showing a group and the lower display is blank, this key allows to enter in the selected group. When the upper display is showing a parameter and the lower display is showing its value, this key allows to store the selected value for the current parameter and access the next parameter within the same group. |
| | Allows to increase the value of the selected parameter. |
| | Allows to decrease the value of the selected parameter. |
| | Short presses allow you to exit the current group of parameters and select a new group. A long press terminates the configuration procedure (the instrument returns to the normal display). |
| + | These two keys allow to return to the previous group. Proceed as follows:<br>Push the button and maintaining the pressure, then push the ; release both the buttons. |

## *Configuration Parameters*

| **inP GROUP - input confiuration** | | | | | |
|---|---|---|---|---|---|
| **Liv** | **N°** | **Param** | **Description** | **Values** | **Default** |
| A | 1 | SEnS | Input type | Pt1 = RTD Pt100<br>Pt10 = RTD Pt1000<br>0.20 = 0..20mA<br>4.20 = 4..20mA Pressure probe<br>0.10 = 0..10V<br>2.10 = 2..10V<br>crAL= Thermocouple K | Depends on the probe |
| A | 2 | dp | Decimal point position | 0... 3 | See page 7 |
| A | 3 | SSc | Initial scale read-out for linear inputs (avaiable only if SEnS parameter is not equal to Pt1, Pt10, crAL values) | -1999... 9999 | 0 |
| C | 4 | FSc | Full scale read-out for linear input inputs (avaiable only if SEnS parameter is not equal to Pt1, Pt10, crAL values) | -1999... 9999 | Depends on the probe |
| C | 5 | unit | Unit of measure<br>(present only in the case of temperature probe) | °C/°F | °C |
| C | 6 | Fil | Digital filter on the measured value | 0 (= OFF)... 20.0 s | 1.0 |
| C | 7 | inE | Selection of the Sensor Out of Range type that will enable the safety output value | or = Over range<br>ou = Under range<br>our = over e under range | or |

| | | | | | |
|---|---|---|---|---|---|
| C | 8 | oPE | Safety output value | -100... 100 | 0 |
| C | 9 | io4.F | I/O4 function selection | on = Out4 will be ever ON (used as a transmitter power supply) ,out4 = Uscita 4 (Used as digital output 4), dG2c = Digital input 2 for contact closure, dG2U = Digital input 2 driven by 12... 24 VDC | on |
| C | 10 | diF1 | Digital input 1 function | oFF = Not used,<br>1 = Alarm reset,<br>2 = Alarm acknowledge (ACK),<br>3 = Hold of the measured value,<br>4 = Stand by mode,<br>5 = Manual mode,<br>6 = HEAt with SP1 and CooL with SP2,<br>7 = Timer RUN/Hold/Reset,<br>8 = Timer Run,<br>9 = Timer Reset,<br>10 = Timer Run/Hold,<br>11 = Timer Run/Reset,<br>12 = Timer Run/Reset with lock,<br>13 = Program Start,<br>14 = Program Reset,<br>15 = Program Hold,<br>16 = Program Run/Hold,<br>17 = Program Run/Reset,<br>18 = Sequential SP selection,<br>19 = SP1 - SP2 selection,<br>20 = SP1... SP4 binary selection,<br>21 = Digital inputs in parallel | 19 |
| C | 12 | di.A | Digital Inputs Action<br>(DI2 only if configured) | 0 = DI1 direct action, DI2 direct action<br>1 = DI1 reverse action, DI2 direct action<br>2 = DI1 direct action, DI2 reverse action<br>3 = DI1 reverse action, DI2 reverse action | 0 |

**Out GROUP- Output parameters**

| Liv | N° | Param | Description | Values | Default |
|---|---|---|---|---|---|
| C | 14 | o1F | Out 1 function | AL = Alarm output | AL |
| C | 15 | o1AL | Initial scale value of the analog retransmission | -1999 ... Ao1H | 1 |
| C | 18 | o1Ac | Out 1 action | dir = Direct action<br>rEU = Reverse action<br>dir.r = Direct with reversed LED<br>ReU.r = Reverse with reversed LED | rEUr.r |
| C | 19 | o2F | Out 2 function | H.rEG = Heating output | H.rEG |
| C | 21 | o2Ac | Out 2 action | dir = Direct action<br>rEU = Reverse action<br>dir.r = Direct with reversed LED<br>ReU.r = Reverse with reversed LED | dir |
| C | 22 | o3F | Out 3 function | H.rEG = Heating output | H.rEG |
| C | 24 | o3Ac | Out 3 action | dir = Direct action<br>rEU = Reverse action<br>dir.r = Direct with reversed LED<br>ReU.r = Reverse with reversed LED | dir |

**AL1 GROUP - Alarm 1 parameters**

| Liv | N° | Param | Descrizione | Values | Default |
|---|---|---|---|---|---|
| C | 28 | AL1t | Tipo allarme AL1 | nonE = Alarm not used<br>LoAb = Absolute low alarm<br>HiAb = Absolute high alarm<br>LHAo = Windows alarm in alarm outside the windows<br>LHAI = Windows alarm in alarm inside the | HidE |

| | | | | | |
|---|---|---|---|---|---|
| | | | | windows<br>SE.br = Sensor Break<br>LodE = Deviation low alarm (relative)<br>HidE = Deviation high alarm (relative)<br>LHdo = Relative band alarm in alarm out of the band<br>LHdi = Relative band alarm in alarm inside the band | |
| C | 29 | Ab1 | Alarm 1 function | 0... 15<br>+1 = Not active at power up<br>+2 = Latched alarm (manual reset)<br>+4 = Acknowledgeable alarm<br>+8 = Relative alarm not active at set point change | 0 |
| C | 30 | AL1L | -- For High and low alarms, it is the low limit of the AL1 threshold;<br>-- For band alarm, it is low alarm threshold | -1999... AL1H (E.U.) | -199.9 |
| C | 31 | AL1H | -- For High and low alarms, it is the high limit of the AL1 threshold;<br>-- For band alarm, it is high alarm threshold | AL1L... 9999 (E.U.) | 999.9 |
| O | 32 | AL1 | AL1 threshold | AL1L... AL1H (E.U.) | See page 7 |
| O | 33 | HAL1 | AL1 hysteresis | 1... 9999 (E.U.) | See page 7 |
| C | 34 | AL1d | AL1 delay | 0 (oFF)... 9999 (s) | oFF |
| C | 35 | AL1o | Alarm 1 enabling during Stand-by mode and out of range conditions | 0 = Alarm 1 disabled during Stand by and out of range<br>1 = Alarm 1 enabled in stand by mode<br>2 = Alarm 1 enabled in out of range condition<br>3 = Alarm 1 enabled in stand by mode and in overrange<br>condition | 1 |

**GRUPPO AL2 - parametri allarme 2**

| Liv | N° | Param | Description | Values | Default |
|---|---|---|---|---|---|
| C | 36 | AL2t | Alarm 2 type | nonE = Alarm not used<br>LoAb = Absolute low alarm<br>HiAb = Absolute high alarm<br>LHAo = Windows alarm in alarm outside the windows<br>LHAI = Windows alarm in alarm inside the windows<br>SE.br = Sensor Break<br>LodE = Deviation low alarm (relative)<br>HidE = Deviation high alarm (relative)<br>LHdo = Relative band alarm in alarm out of the band<br>LHdi = Relative band alarm in alarm inside the band | SE.br |
| C | 37 | Ab2 | Alarm 2 function | 0... 15<br>+1 = Not active at power up<br>+2 = Latched alarm (manual reset)<br>+4 = Acknowledgeable alarm<br>+8 = Relative alarm not active at set point change | 0 |
| C | 42 | AL2d | AL2 hysteresis | 0 (oFF)... 9999 (s) | oFF |
| C | 43 | AL2o | Alarm 2 enabling during Stand-by mode and out of range conditions | 0 = Alarm 2 disabled during Stand by and out of range<br>1 = Alarm 2 enabled in stand by mode<br>2 = Alarm 2 enabled in out of range condition<br>3 = Alarm 2 enabled in stand by mode and in overrange<br>condition | 0 |

| AL3 Group - alarm 3 parameters | | | | | |
|---|---|---|---|---|---|
| **Liv** | **N°** | **Param** | **Description** | **Values** | **Default** |
| | 44 | AL3t | Alarm 3 type | nonE = Alarm not used<br>LoAb = Absolute low alarm<br>HiAb = Absolute high alarm<br>LHAo = Windows alarm in alarm outside the windows<br>LHAI = Windows alarm in alarm inside the windows<br>SE.br = Sensor Break<br>LodE = Deviation low alarm (relative)<br>HidE = Deviation high alarm (relative)<br>LHdo = Relative band alarm in alarm out of the band<br>LHdi = Relative band alarm in alarm inside the band | nonE |

| LbA Group - Loop break alarm | | | | | |
|---|---|---|---|---|---|
| **Liv** | **N°** | **Param** | **Descrizione** | **Values** | **Default** |
| C | 52 | LbAt | LBA time | Da 0 (oFF) a 9999 (s) | oFF |

| rEG Group - Control parameters | | | | | |
|---|---|---|---|---|---|
| **Liv** | **N°** | **Param** | **Description** | **Values** | **Default** |
| C | 56 | cont | Control type | Pid = PID (heat and/or)<br>On.FA = ON/OFF asymmetric hysteresis<br>On.FS = ON/OFF symmetric hysteresis<br>nr = Heat/Cool ON/OFF control with neutral zone<br>3Pt = Servomotor control (available only when Output 2 and<br>Output 3 have been ordered as “M”) | 3pt |
| C | 57 | Auto | Autotuning selection | -4 = Oscillating auto-tune with automaticrestart at power up and after all point change<br>-3 = Oscillating auto-tune with manual start<br>-2 = Oscillating -tune with auto-matic start at the first power up only<br>-1 = Oscillating auto-tune with auto-matic restart at every power up<br>0 = Not used<br>1 = Fast auto tuning with automatic restart at every power up<br>2 = Fast auto-tune with automatic start the first power up only<br>3 = FAST auto-tune with manual start<br>4 = FAST auto-tune with automatic restart at power up and<br>after set point change<br>5 = Evo-tune with automatic restart at every power up<br>6 = Evo-tune with automatic start the first power up only<br>7 = Evo-tune with manual start<br>8 = Evo-tune with automatic restart at power up and after a set point change | 7 |
| C | 58 | tunE | Manual start of the Autotuning | oFF = Not active<br>on = Active | oFF |

| | | | | | |
|---|---|---|---|---|---|
| C | 59 | SELF | Self tuning enabling | no = The instrument does not perform the self-tuning<br>YES = The instrument is performing the self-tuning | No |
| A | 62 | Pb | Proportional band | 1... 9999 (E.U.) | See page 7 |
| A | 63 | ti | Integral time | 0 (oFF) ... 9999 (s) | See page 7 |
| A | 64 | td | Derivative time | 0 (oFF) ... 9999 (s) | See page 7 |
| C | 65 | Fuoc | Fuzzy overshoot control | 0.00... 2.00 | 1 |
| C | 69 | rS | Manual reset (Integral pre-load) | -100.0... +100.0 (%) | 0.0 |
| A | 70 | Str.t | Servomotor stroke time | 5...1000 seconds | See page 7 |
| A | 71 | db.S | Servomotor dead band | 0...100% | 5 |
| C | 72 | od | Delay at power up | 0.00 (oFF) ... 99.59 (hh.mm) | oFF |

**SP Group - Set point parameters**

| Liv | N° | Param | Description | Values | Default |
|---|---|---|---|---|---|
| C | 76 | nSP | Number of used set points | 1... 4 | 2 |
| A | 77 | SPLL | Minimum set point value | -1999 ... SPHL | See page 7 |
| A | 78 | SPHL | Maximum set point value | SPLL ... 9999 | See page 7 |
| O | 79 | SP | Set point 1 | SPLL ... SPLH | See page 7 |
| C | 80 | SP 2 | Set point 2 | SPLL ... SPLH | 60 |
| | 83 | A.SP | Selection of the active set point | "SP" ... " nSP" | SP |
| C | 84 | SP.rt | Remote set point type | RSP = The value coming from serial link is used as remote set point<br>trin = The value will be added to the local set point selected by<br>A.SP and the sum becomes the operative set point<br>PErc = The value will be scaled on the input range and this value will be used as remote SP | trin |
| C | 85 | SPLr | Local/remote set point selection | Loc = Local<br>rEn = Remote | Loc |
| C | 86 | SP.u | Rate of rise for POSITIVE set point change (ramp UP) | 0.01... 99.99 (inF) Eng. units per minute | inF |
| C | 87 | SP.d | Rate of rise for NEGATIVE set point change (ramp DOWN) | 0.01... 99.99 (inF) Eng. units per minute | inF |

**PAn Group - Operator HMI**

| Liv | N° | Param | Description | Values | Default |
|---|---|---|---|---|---|
| C | 118 | PAS2 | Level 2 password (limited access level) | oFF (Level 2 not protected by password)<br>1... 200 | 20 |
| C | 119 | PAS3 | Level 3 password (complete configuration level) | 3... 300 | 30 |
| C | 120 | PAS4 | Password livello (livello configurazione a codice) | 201... 400 | 300 |
| C | 121 | uSrb | button function during RUN TIME | nonE = No function<br>tunE = Auto-tune/self-tune enabling. A single press (longer than 1 second)<br>starts the auto-tune<br>oPLo = Manual mode. The first pressure puts the instrument in manual mode<br>(OPLO) while a second one puts the instrument in Auto mode | tunE |

| | | | | | |
|---|---|---|---|---|---|
| | | | | AAc = Alarm reset<br>ASi = Alarm acknowledge<br>chSP = Sequential set point selection<br>St.by = Stand by mode. The first press puts the instrument in stand by<br>mode while a second one puts the instrument in Auto mode.<br>Str.t = Timer run/hold/reset<br>P.run = Program run<br>P.rES = Program reset<br>P.r.H.r = Program run/hold/reset | |
| C | 122 | diSP | Display management | Spo = Operative set point | SPo |
| C | 123 | di.cL | Display colour | 0 = The display colour is used to show the actual deviation (PV - SP)<br>1 = Display red (fix)<br>2 = Display green (fix)<br>3 = Display orange (fix) | 2 |
| | 125 | diS.t | Display Timeout | -- oFF (display always ON)<br>-- 0.1... 99.59 (mm.ss) | oFF |
| C | 126 | fiLd | Filter on the displayed value | -- oFF (filter disabled)<br>-- From 0.0 (oFF) to 20.0 (E.U.) | oFF |
| C | 128 | dSPu | Instrument status at power ON | AS.Pr = Starts in the same way it was prior to the power down<br>Auto = Starts in Auto mode<br>oP.0 = Starts in manual mode with a power output equal to zero<br>St.bY = Starts in stand-by mode | Auto |
| C | 129 | oPr.E | Operative modes enabling | ALL = All modes will be selectable by the next parameter<br>Au.oP = Auto and manual (OPLO) mode only will be selectable by the next parameter<br>Au.Sb = Auto and Stand-by modes only will be selectable by the next parameter | ALL |
| C | 130 | oPEr | Operative mode selection | If oPr.E = ALL: - Auto = Auto mode<br>- oPLo = Manual mode<br>- St.bY = Stand by mode<br>If oPr.E = Au.oP: - Auto = Auto mode<br>- oPLo = Manual mode<br>If oPr.E = Au.Sb: - Auto = Auto mode<br>- St.bY = Stand by mode | Auto |

**SEr Group - Serial link parameter**

| Liv | N° | Param | Description | Values | Default |
|---|---|---|---|---|---|
| C | 131 | Add | Instrument address | -- oFF<br>-- 1... 254 | 1 |
| C | 132 | bAud | baud rate | 1200 = 1200 baud<br>2400 = 2400 baud<br>9600 = 9600 baud<br>19.2 = 19200 baud<br>38.4 = 38400 baud | 9600 |
| C | 133 | trSP | Selection of the value to be retransmitted (Master) | nonE = Retransmission not used (the instrument is a slave)<br>rSP = The instrument becomes a Master and retransmits the operative set point<br>PErc = The instrument become a Master and it retransmits the power output | nonE |

| con Group - Consumption parameters | | | | | |
|---|---|---|---|---|---|
| **Liv** | **N°** | **Param** | **Description** | **Values** | **Default** |
| C | 134 | Co.tY | Count type | oFF = Not used<br>1 = Instantaneous power (kW)<br>2 = Power consumption (kW/h)<br>3 = Energy used during program execution. This measure starts from<br>zero when a program runs end stops at the end of the program. A<br>new program execution will reset the value<br>4 = Total worked days: number of hours the instrument is turned ON<br>divided by 24.<br>5 = Total worked hours: number of hours the instrument is turned ON.<br>6 = Total worked days with threshold: number of hours the instrument is<br>turned ON divided by 24, the controller is forced in stand-by when<br>Co.ty value reaches the threshold set in [137] h.Job.<br>7 = Total worked hours with threshold: number of hours the instrument<br>is turned ON, the controller is forced in stand-by when Co.ty value<br>reaches the threshold set in [137] h.Job.<br>8 = Totalizer of control relay worked days: number of hours the control<br>relay has been in ON condition, divided by 24.<br>9 = Totalizer of control relay worked hours: number of hours the control<br>relay has been in ON condition.<br>10 = Totalizer of control relay worked days with threshold: number of<br>hours the control relay has been in ON condition divided by 24,<br>the controller is forced in stand-by when Co.ty value reaches the<br>threshold set in [137] h.Job.<br>11 = Totalizer of control relay worked hours with threshold: number of<br>hours the control relay has been in ON condition, the controller is<br>forced in stand-by when Co.ty value reaches the threshold set in<br>[137] h.Job. | oFF |
| C | 138 | t.Job | Worked time (not resettable) | 0... 9999 days | 0 |

| cAL Group - User calibration group | | | | | |
|---|---|---|---|---|---|
| **Liv** | **N°** | **Param** | **Description** | **Values** | **Default** |
| C | 139 | AL.P | Adjust Low Point | From -1999 to (AH.P - 10) in engineering units | 0 |
| C | 140 | AL.o | Adjust Low Offset | -300... +300 (E.U.) | 0 |
| C | 141 | AH.P | Adjust High Point | From (AL.P + 10) to 9999 engineering units | 999.9 |
| C | 142 | AH.o | Adjust High Offset | -300... +300 | 0 |

# OPERATIVE MODES

When the instrument is powered, it starts immediately to work according to the parameters values loaded in its memory. The instrument behaviour and its performance are governed by the value of the stored parameters.

At power ON the instrument can start in one of the following mode depending on its configuration:

**Automatic Mode** In Automatic mode the instrument drives automatically the control output according to the parameter value set and the set point/measured value.

**Manual Mode** (OPLO): In Manual mode the the upper display shows the measured value while the lower display shows the power output The lower display shows the power output [preceded by H (for heating) or C (for cooling)], MAN is lit and the instrument allows you to set manually the control output power. No Automatic action will be made.

**Stand by Mode** (St.bY): In stand-by mode the instrument operates as an indicator. It will show on the upper display the measured value and on the lower display the set point alternately to the “St.bY” messages and forces the control outputs to zero.

We define all the above described conditions as “Standard Display”.

As we have seen, it is always possible to modify the value assigned to a parameter independently from the operative modes selected.

## *AUTOMATIC MODE*

Keyboard function when the instrument is in Auto mode:

| | **Modo Operatore** |
|---|---|
| | Allows entry into parameter modification procedures |
| | Allows you to start the “Direct set point modification” function (see below). |
| | Allows you to display the “additional informations” (see below). |
| | Performs the action programmed by [121] uSrb ( button function during RUN TIME) parameter |

**Additional information**
This instrument is able to show you some additional informations that can help you to manage your system.
The additional informations are related to how the instrument is programmed, hence in many cases, only part of this information is available.

1. When the instrument is showing the “standard display” push button. The lower display will show H or c followed by a number. This value is the current power output applied to the process. The H show you that the action is a Heating action while the "c" show you that the action is a Cooling action
2. Push button again. When the programmer is running the lower display will show the segment currently performed and the Event status as shown below:
   r 1.00 where the first character can be r for a ramp or S for a soak, the next digit show the number of the segment (e.g. S3 means Soak number 3) and the twoless significant digits (LSD) show you the status of the two event (the LSD is the Event 2)..
3. Push button again. When the programmer is running the lower display will show the theoretical remaining time to the end of the program preceded by a "P" letter:
   P84.3
4. Push button again. When the wattmeter function is running the lower display will show U followed by the measured energy..
5. Push button. When the “Worked time count” is running the lower display will show "d" for days or "h" for hours followed by the measured time.
6. Push button. The instrument returns to the "standard display".

Note: The additional information visualization is subject to a time out. If no button is pressed for more than 10 second the instrument comes automatically back to the Standard display..

**Direct set point modification**
This function allows to modify rapidly the set point value selected by [83] A.SP (selection of the active Set point) or to the set point of the segment group (of the programmer) currently in progress.

1. Push button. The upper display shows the acronym of the selected set point (e.g. SP2) and the lower display will show its value.
2. By and buttons, assign to this parameter the desired value
3. Do not push any button for more than 5 second or push the button. In both cases the instrument memorize the new value and come back to the “standard display”.

## *Manual mode*

This operative mode allows you to deactivate automatic control and manually program the percentage power output to the process. When the instrument is in manual mode, the upper display shows the measured value while the lower display shows the power output [preceded by H (for heating action) or C (for cooling action)] The MAN LED is lit. When manual control is selected, the instrument will start to operate with the same power output as the last one supplied by automatic mode and can be modified using the and buttons.

In case of ON/OFF control, 0% corresponds to the deactivated output while any value different from 0 corresponds to the activated output. As in the case of visualization, the programmable values range from H100 (100% output power with reverse action) to C100 (100% output power with direct action).

**Notes**:

- During manual mode, the alarms are operative.
- If you set manual modes during program execution, the program will be frozen and it will restart when the instrument will come back to Auto mode.
- If you set manual modes during self-tune execution, the self- tune function will be aborted.
- During manual mode, all functions not related with the control (wattmeter, independent timer, “worked time”, etc) continue to operate normally..

## *STAND-BY MODE*

This operative mode also deactivates the automatic control but forces the control output to zero. In this mode the instrument operates as an indicator. When the instrument is in stand by mode the upper display will show the measured value while the lower display will show alternately the set point and the message “St.bY”.

Notes:

- During stand by mode, the relative alarms are disabled while the absolute alarms are operative or not according to the ALxo (Alarm x enabling during Stand-by mode) parameter setting.
- If you set stand by mode during program execution, the program will be aborted.
- If you set stand by mode during self-tune execution, the self- tune function will be aborted.
- During stand by mode, all functions not related with the control (wattmeter, independent timer, “worked time”, etc) continue to operate normally.
- When the instrument is swapped from stand by to auto modes, the instrument will start automatically the alarm masking, the soft start functions and the auto-tune (if programmed).

## *AUTOTUNE (EVOTUNE)*

Evotune is a fast and fully automatic procedure that can be started in any condition, regardless the deviation from SP. The controller selects automatically the best tune method and computes the optimum PID parameters. To activate Evotune press button for 3 seconds.

## ERROR MESSAGES

The upper display shows the OVER-RANGE and UNDERRANGE conditions with the following indications:

Over-range: OOOO

Under-range U.U.U.U.

The sensor break will be signalled as an out of range: - - - -

Note: When an over-range or an under-range is detected, the alarms operate as in presence of the maximum or the minimum measurable value respectively.

To check the out of span Error condition, proceed as follows:

1. Check the input signal source and the connecting line.
2. Make sure that the input signal is in accordance with the instrument configuration. Otherwise, modify the input configuration.
3. If no error is detected, send the instrument to your supplier to be checked.

### *List of possible errors*

**ErAT** Fast Auto-tune cannot start. The measure value is tooclose to the set point. Push the button in order to delete the error message.

**ouLd** Overload on the out 4. The messages shows that a short circuit is present on the Out 4 when it is used as output or as a transmitter power suply. When the short circuit disappears the output restart to operate..

**NoAt** Auto-tune not finished within 12 hours.

**ErEP** Possible problem of the instrument memory. The messages disappears automatically. When the error continues, send the instrument to your supplier.

**RonE** Possible problem of the firmware memory. When this error is detected, send the instrument to your supplier.

**Errt** Possible problem of the calibration memory. When this error is detected, send the instrument to your supplier.

## FACTORY RESET

Sometime, e.g. when you re-configure an instrument previously used for other works or from other people or when you have made too many errors during configuration and you decided to re-configure the instrument, it is possible to restore the factory configuration. This action allows to put the instrument in a defined condition (the same it was at the first power ON).

The default data are those typical values loaded in the instrument prior to ship it from factory. To load the factory default parameter set, proceed as follows:

1. Press the button for more than 5 seconds. The upper display will show PASS while the lower display shows 0;
2. Using and buttons set the value -481;
3. Push button;
4. The instrument will turn OFF all LEDs for a few seconds, then the upper display will show dFLt (default) and then all LEDs are turned ON for 2 seconds. At this point the instrument restarts as for a new power ON.

The procedure is complete.

Note: The complete list of the default parameters is available in Chapter "Configuration".

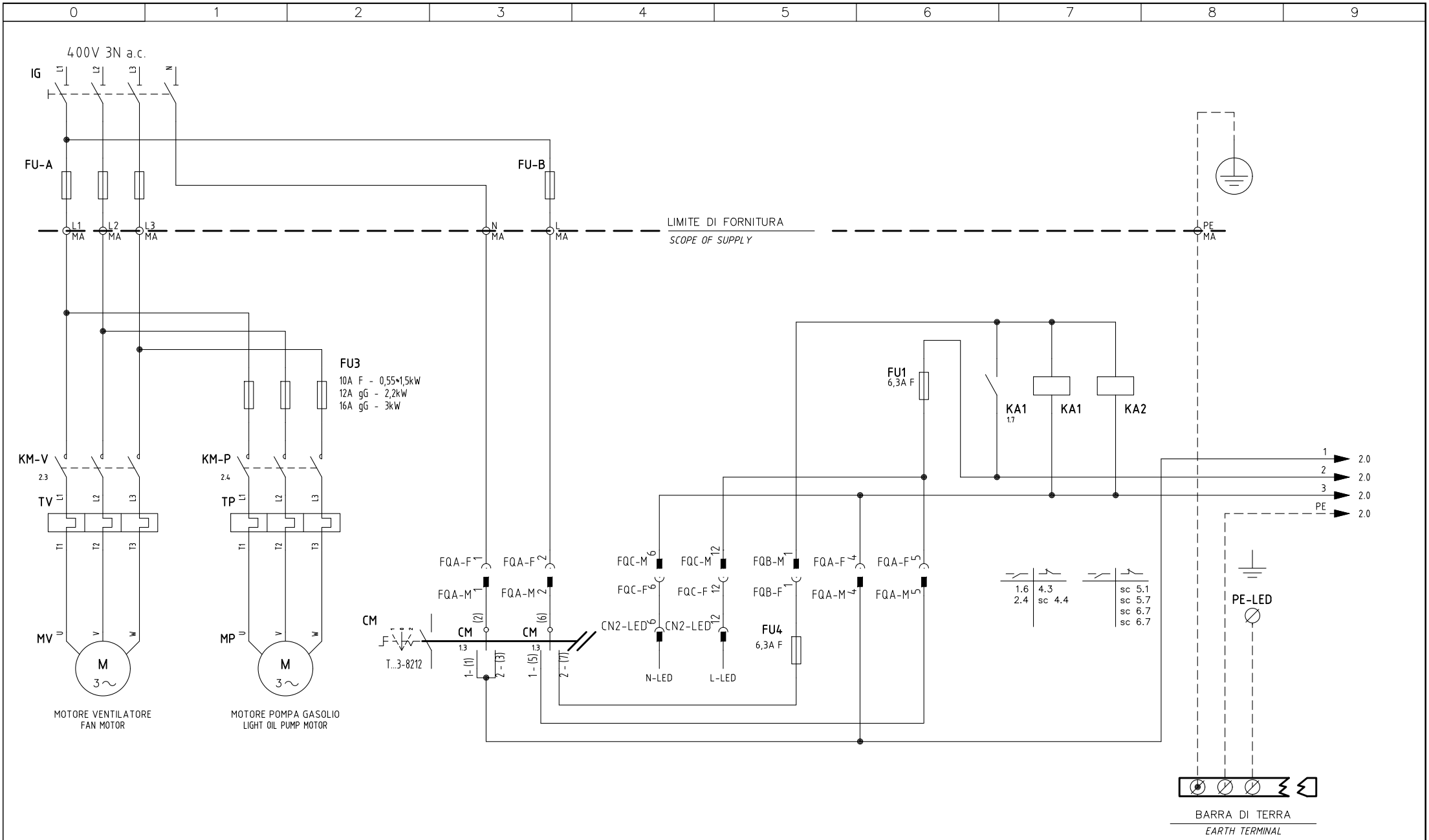


| | | | |
|---|---|---|---|
| 01 | "RWF40" MODULATOR ADDED | 30/03/16 | U. PINTON |
| REV. | MODIFICA | DATA | FIRME |

UNIGAS

Impianto
*TIPI/TYPES HR91A÷520A/HTP91A÷520A/G../H../K..*
*MODELLO/MODEL xG–.PR(MD).x.xx.A.1.xx*

Descrizione
*LME73.xx + COD. 6100574 + COD. 6100566*

Ordine

Commessa

Esecutore
U. PINTON

Data Controllato
30/03/2016

Controllato
G. SCATTOLIN

Data 22/05/2015

Revisione 01

Dis. N. 09 – 0432

PREC. /

FOGLIO 1

SEGUE 2

TOTALE 15

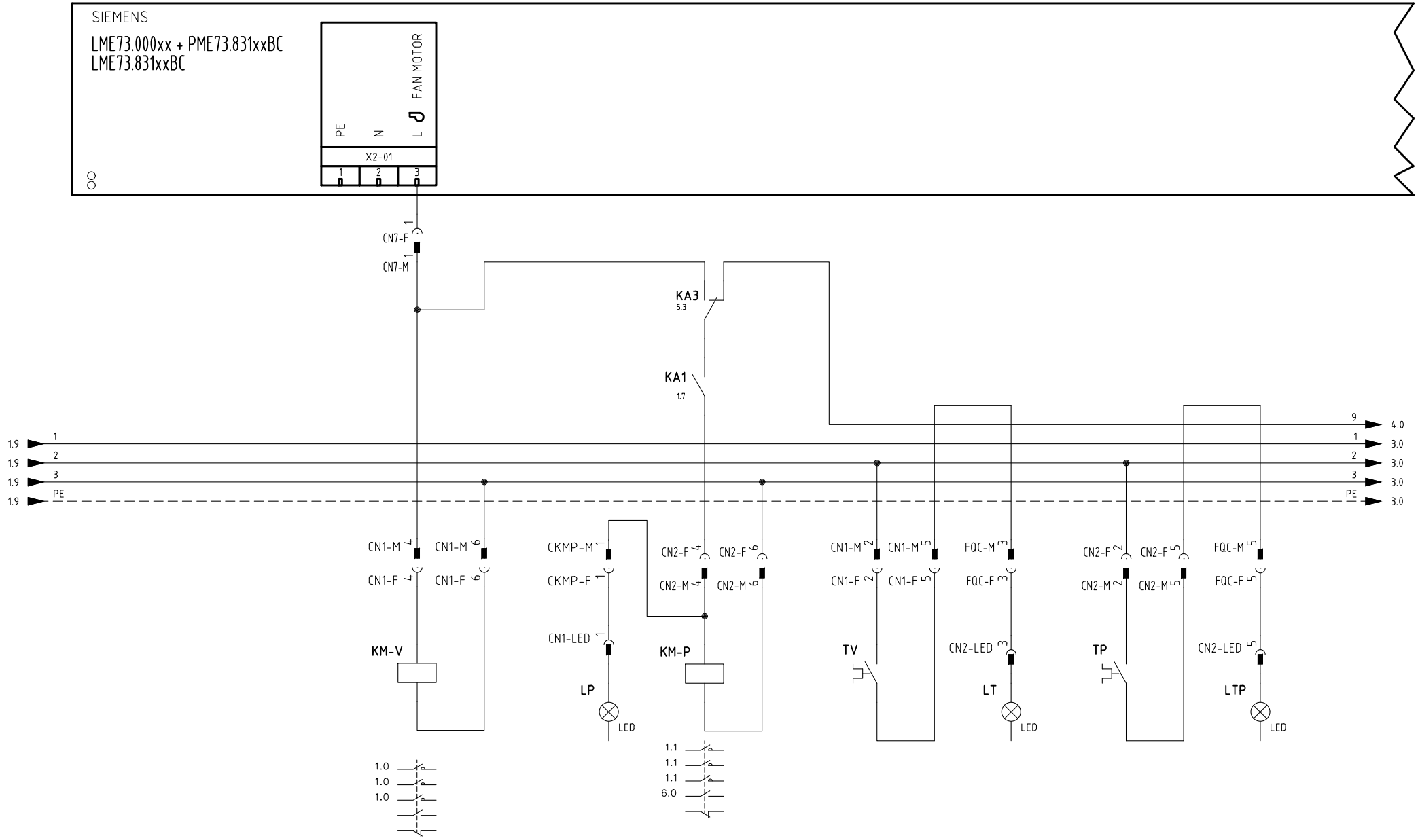


| | | | |
|---|---|---|---|
| Data 22/05/2015 | | PREC. | FOGLIO |
| Revisione 01 | | 1 | 2 |
| Dis. N. 09 – 0432 | | SEGUE | TOTALE |
| | | 3 | 15 |

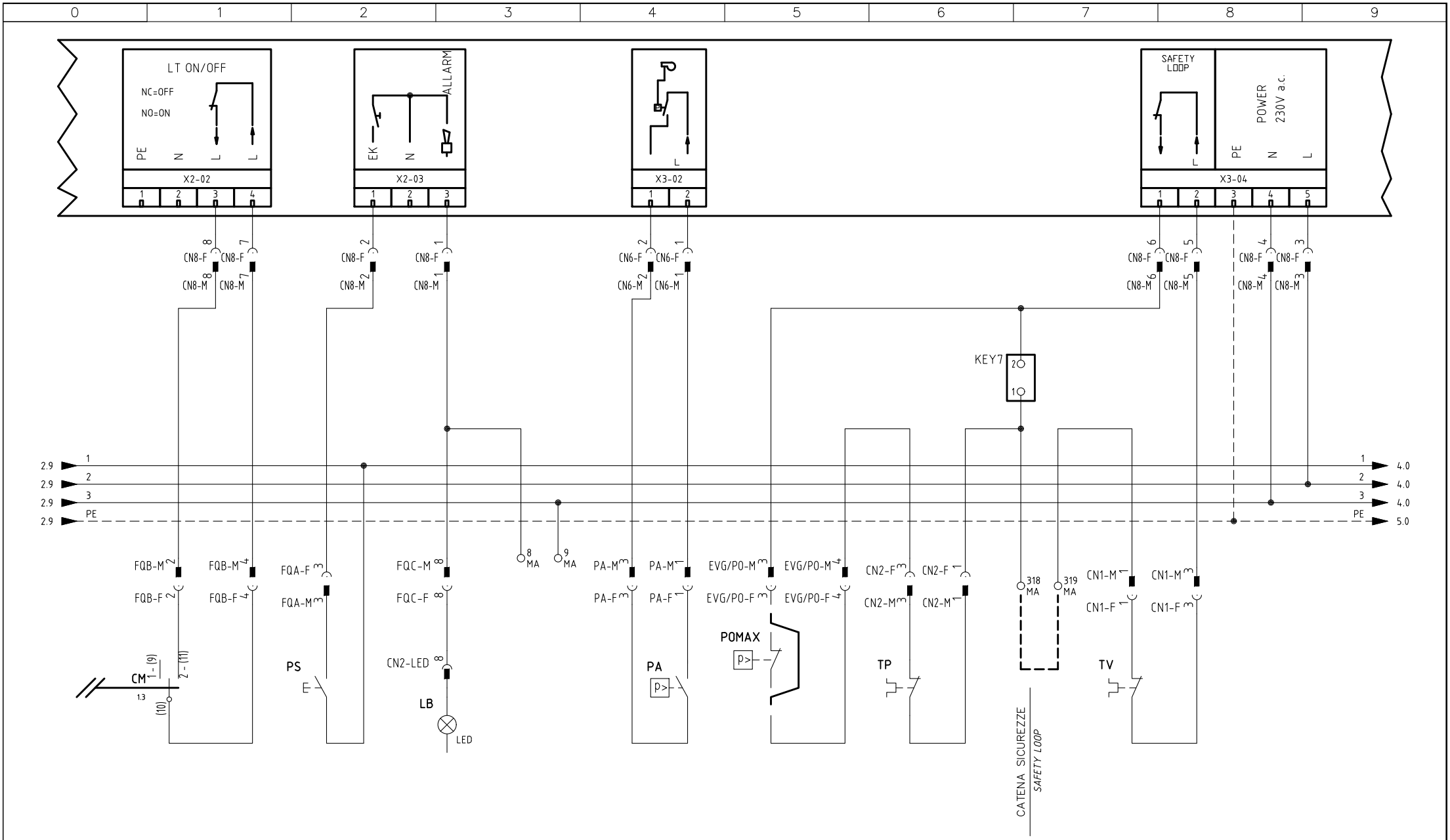


| | | | |
|---|---|---|---|
| Data 22/05/2015 | | PREC. | FOGLIO |
| Revisione 01 | | 2 | 3 |
| Dis. N. 09 – 0432 | | SEGUE | TOTALE |
| | | 4 | 15 |

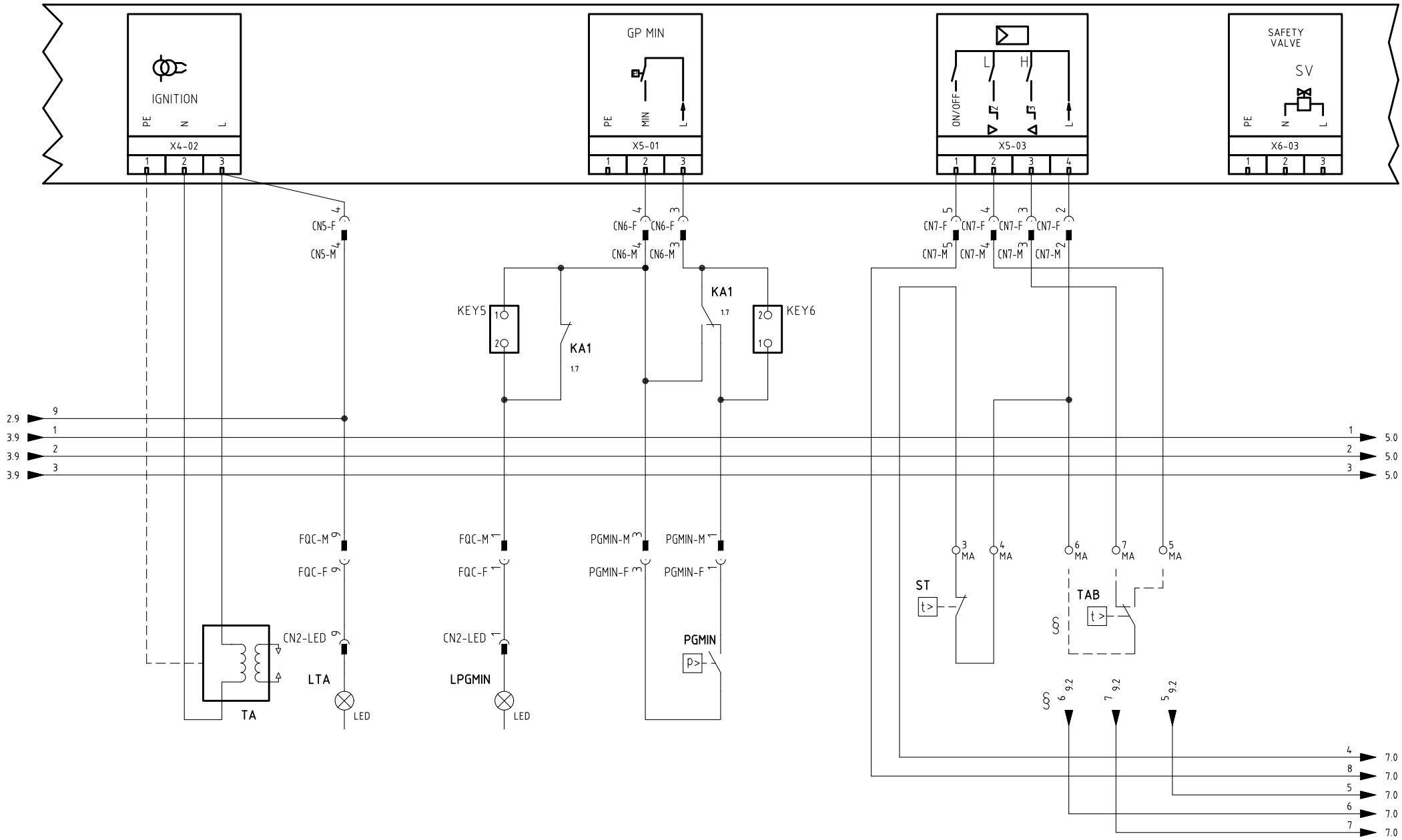


VERSIONE (PR) / VERSIONE (MD) CON RWF.. / 600V / KM3

*(PR) VERSION / (MD) VERSION WITH RWF.. / 600V / KM3*

| | | | |
|---|---|---|---|
| Data 22/05/2015 | PREC. | FOGLIO |
| Revisione 01 | 3 | 4 |
| Dis. N. 09 – 0432 | SEGUE 5 | TOTALE 15 |

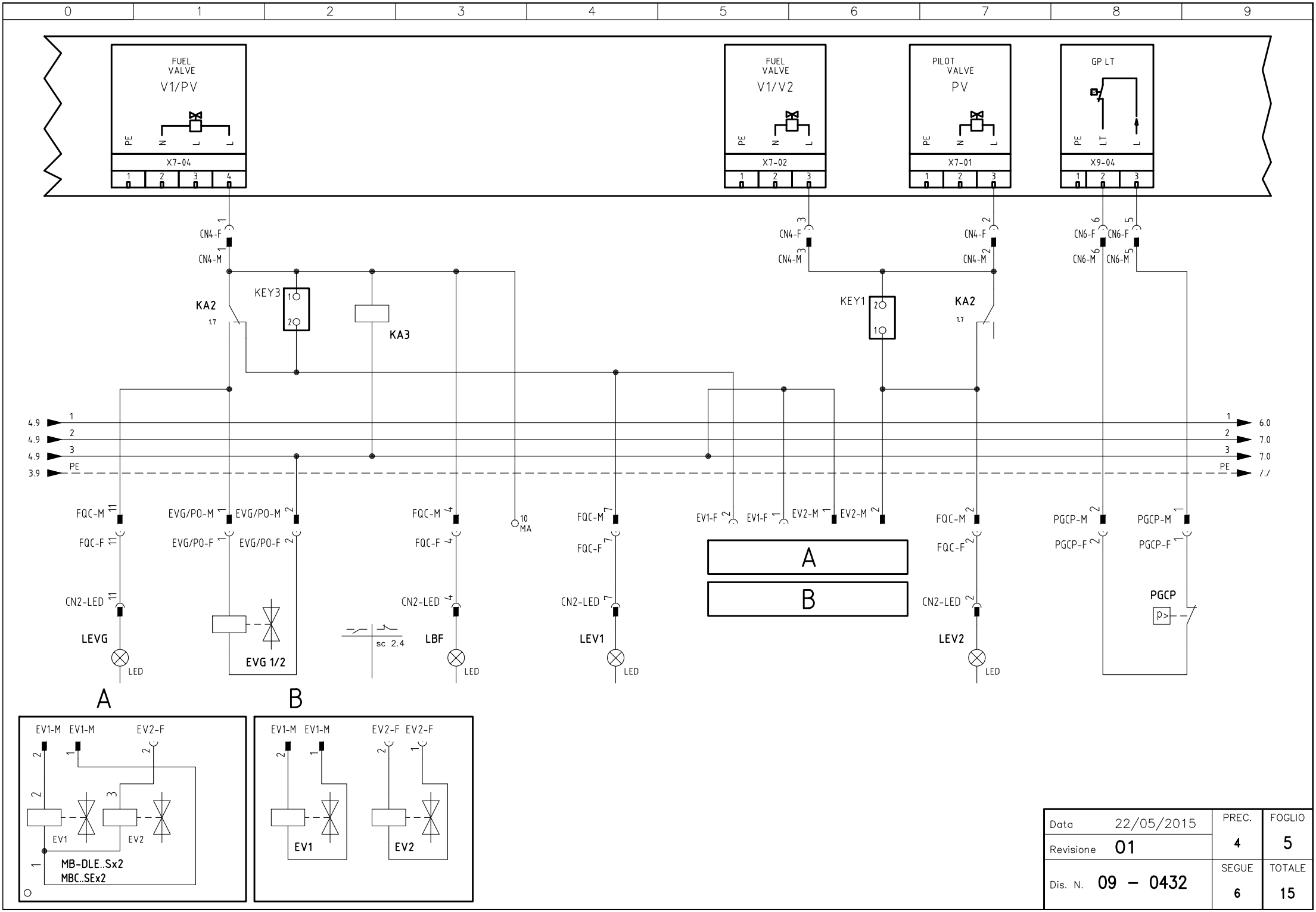


| | | | |
|---|---|---|---|
| Data | 22/05/2015 | PREC. | FOGLIO |
| Revisione | 01 | 4 | 5 |
| Dis. N. | 09 – 0432 | SEGUE | TOTALE |
| | | 6 | 15 |

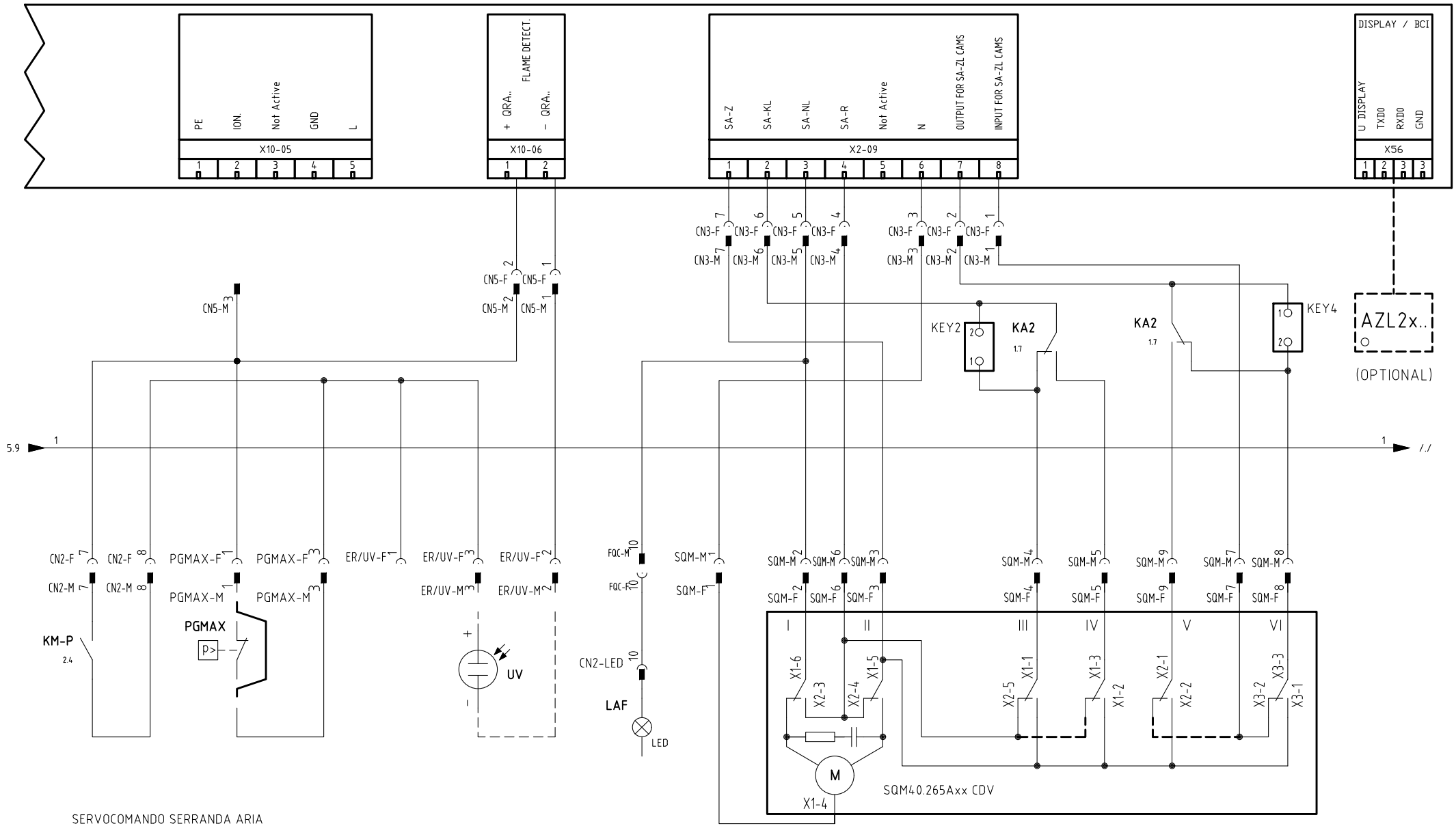


SERVOCOMANDO SERRANDA ARIA

*AIR DAMPER ACTUATOR*

SQM40.265Axx CDV

| | |
|---|---|
| I | ALTA FIAMMA<br>*HIGH FLAME* |
| II | SOSTA<br>*STAND-BY* |
| III | BASSA FIAMMA GAS<br>*GAS LOW FLAME* |
| IV | BASSA FIAMMA GASOLIO<br>*LIGHT OIL LOW FLAME* |
| V | ACCENSIONE GASOLIO<br>*LIGHT OIL IGNITION* |
| VI | ACCENSIONE GAS<br>*GAS IGNITION* |

| | | | |
|---|---|---|---|
| Data | 22/05/2015 | PREC. | FOGLIO |
| Revisione | 01 | 5 | 6 |
| Dis. N. | 09 – 0432 | SEGUE | TOTALE |
| | | 7 | 15 |

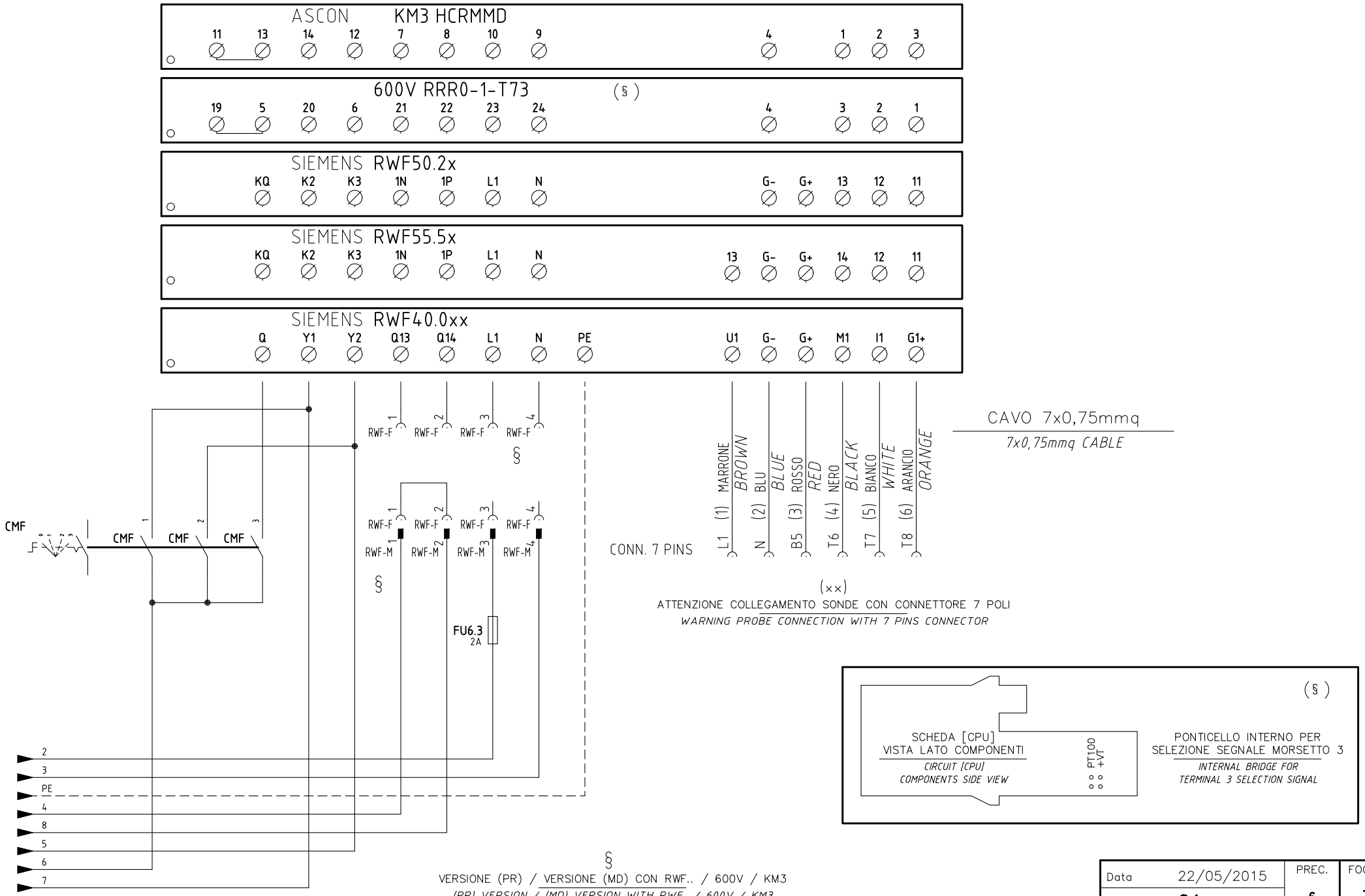


| | | | |
|---|---|---|---|
| Data 22/05/2015 | PREC. | FOGLIO |
| Revisione 01 | 6 | 7 |
| Dis. N. 09 – 0432 | SEGUE 8 | TOTALE 15 |

(xx)
ATTENZIONE COLLEGAMENTO SONDE CON CONNETTORE 7 POLI
*WARNING PROBE CONNECTION WITH 7 PINS CONNECTOR*

# KM3 HCRMMD

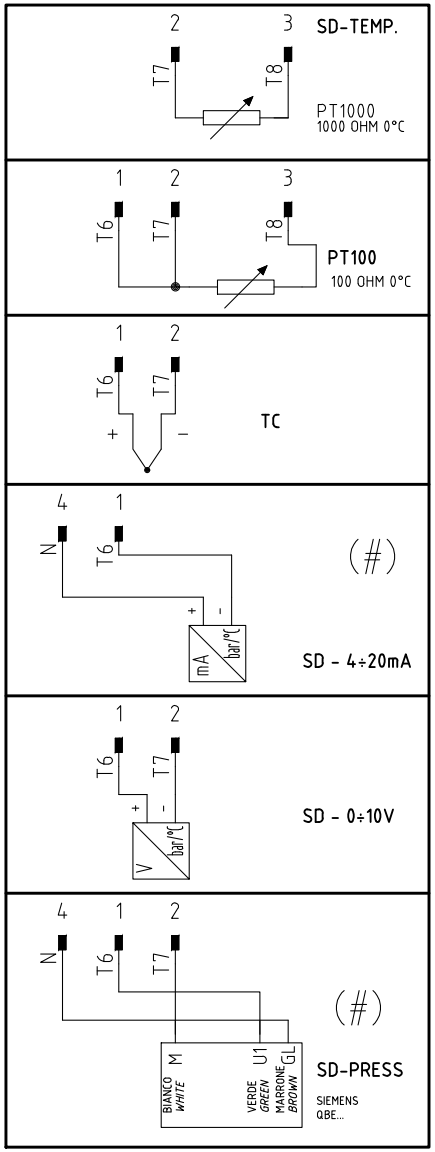


# 600V RRR0-1-T73

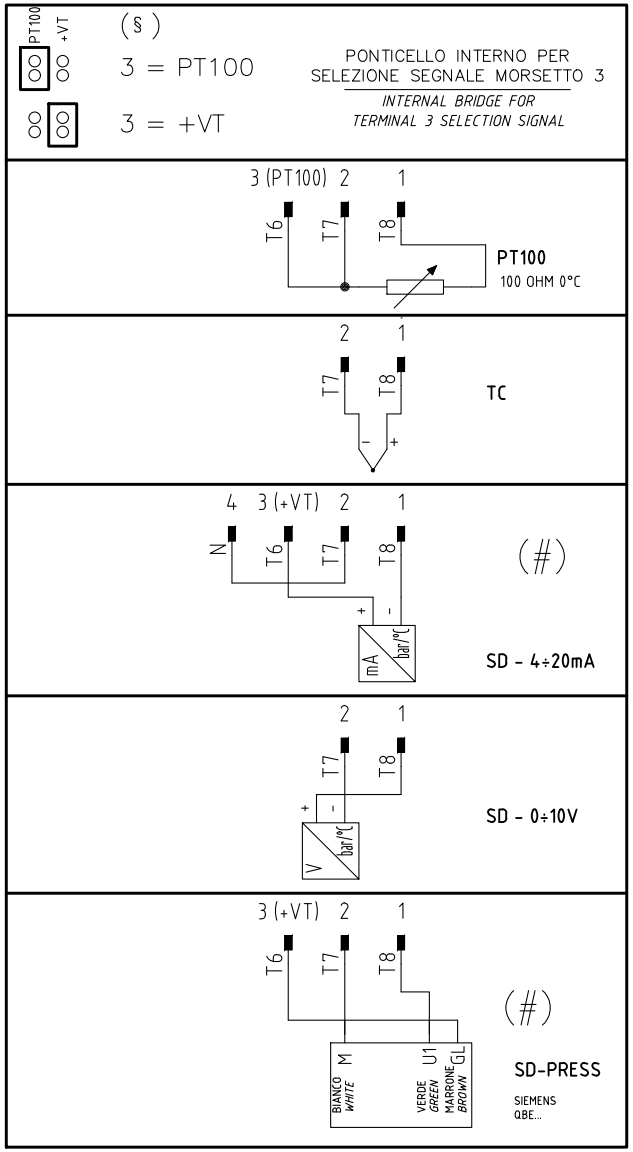


# RWF55.5x

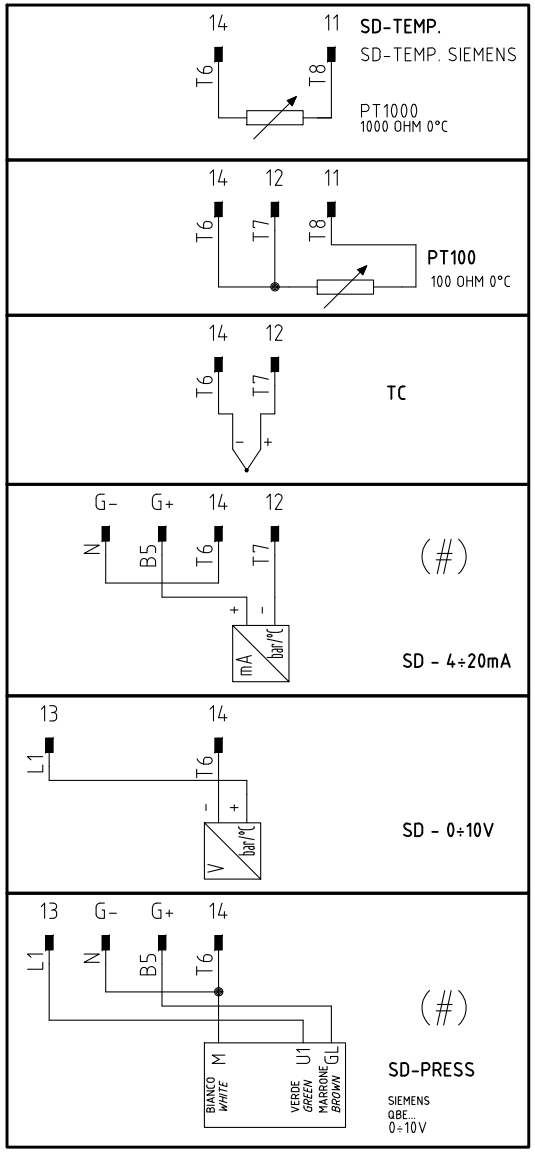


(#)
COLLEGAMENTO SOLO PER
TRASDUTTORI PASSIVI
*TRASDUCER PASSIVE*
*CONNECTION ONLY*

| | | | |
|---|---|---|---|
| Data 22/05/2015 | | PREC. | FOGLIO |
| Revisione 01 | | 7 | 8 |
| Dis. N. 09 – 0432 | | SEGUE | TOTALE |
| | | 9 | 15 |

(xx)
ATTENZIONE COLLEGAMENTO SONDE CON CONNETTORE 7 POLI
*WARNING PROBE CONNECTION WITH 7 PINS CONNECTOR*

## RWF50.2x

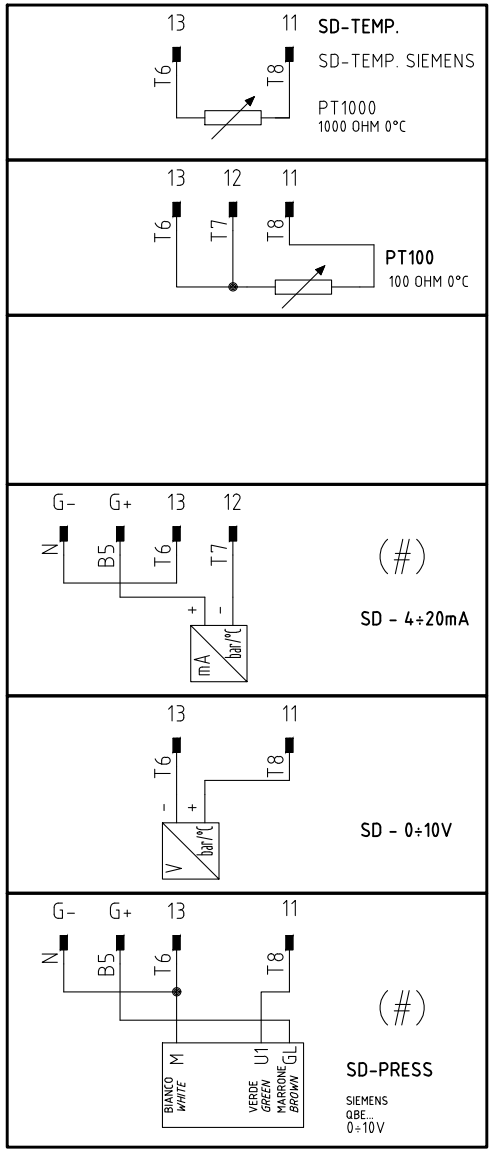


## RWF40.0xx

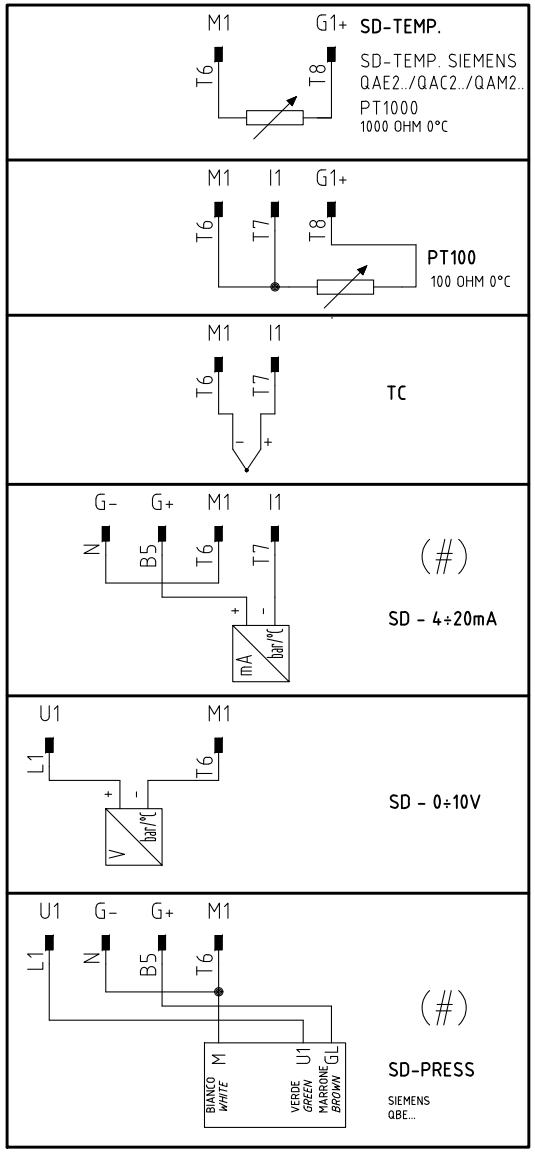


(#)
COLLEGAMENTO SOLO PER TRASDUTTORI PASSIVI
*TRASDUCER PASSIVE CONNECTION ONLY*

| | | | |
|---|---|---|---|
| Data 22/05/2015 | | PREC. | FOGLIO |
| Revisione 01 | | 8 | 9 |
| Dis. N. 09 – 0432 | | SEGUE | TOTALE |
| | | 10 | 15 |

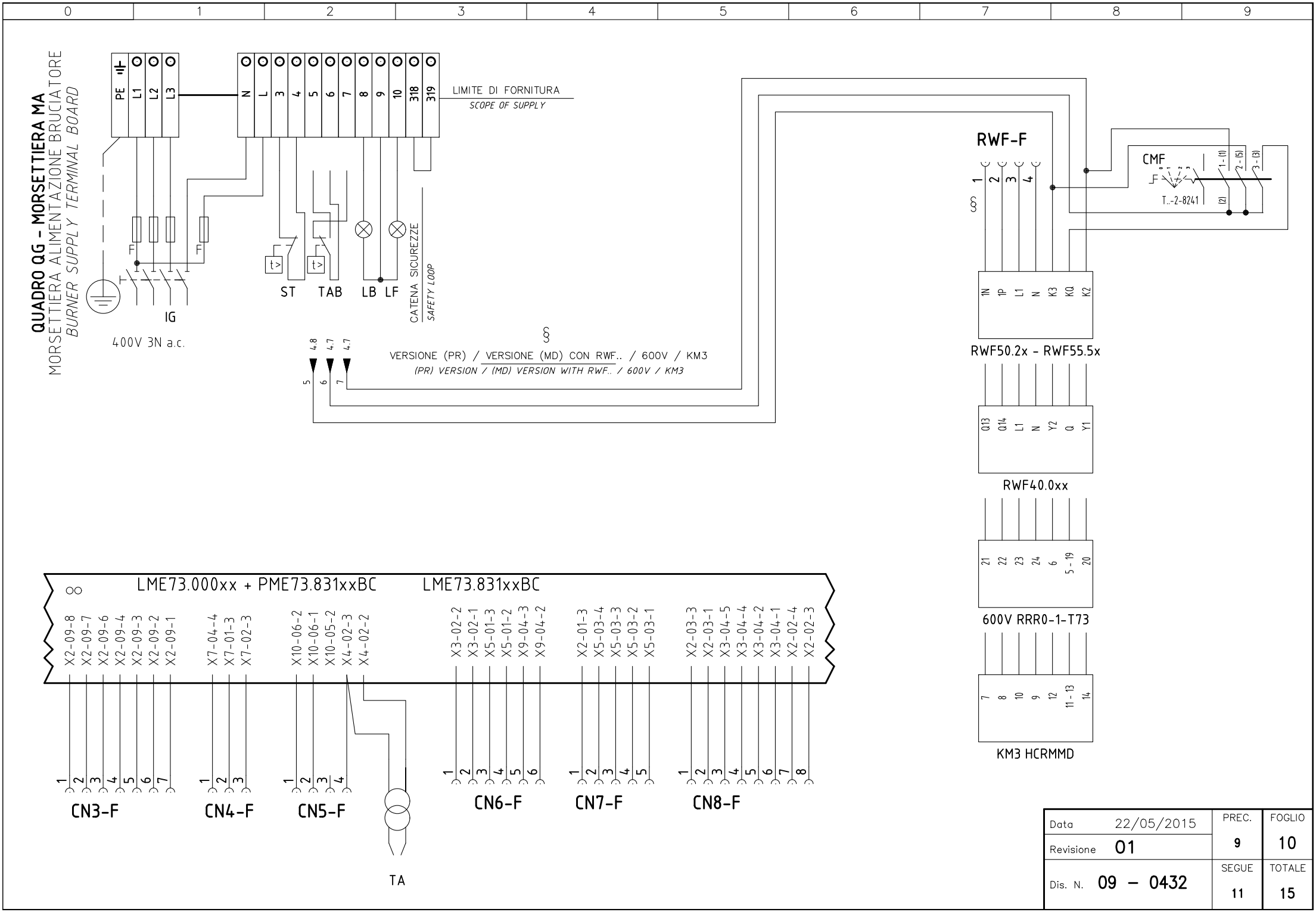


| | | | |
|---|---|---|---|
| Data | 22/05/2015 | PREC. | FOGLIO |
| Revisione | 01 | 9 | 10 |
| Dis. N. | 09 – 0432 | SEGUE | TOTALE |
| | | 11 | 15 |

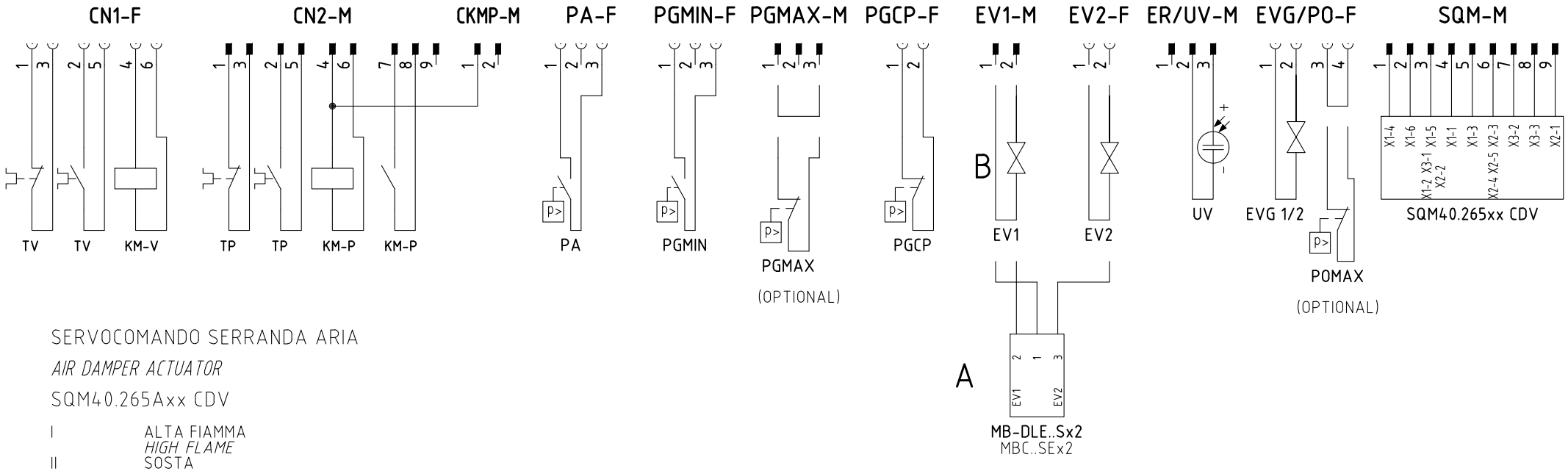


SERVOCOMANDO SERRANDA ARIA

*AIR DAMPER ACTUATOR*

SQM40.265Axx CDV

| | |
|---|---|
| I | ALTA FIAMMA<br>*HIGH FLAME* |
| II | SOSTA<br>*STAND-BY* |
| III | BASSA FIAMMA GAS<br>*GAS LOW FLAME* |
| IV | BASSA FIAMMA GASOLIO<br>*LIGHT OIL LOW FLAME* |
| V | ACCENSIONE GASOLIO<br>*LIGHT OIL IGNITION* |
| VI | ACCENSIONE GAS<br>*GAS IGNITION* |

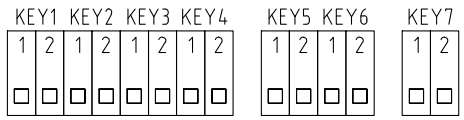


| | | | |
|---|---|---|---|
| Data 22/05/2015 | | PREC. | FOGLIO |
| Revisione 01 | | 10 | 11 |
| Dis. N. 09 – 0432 | | SEGUE | TOTALE |
| | | 12 | 15 |

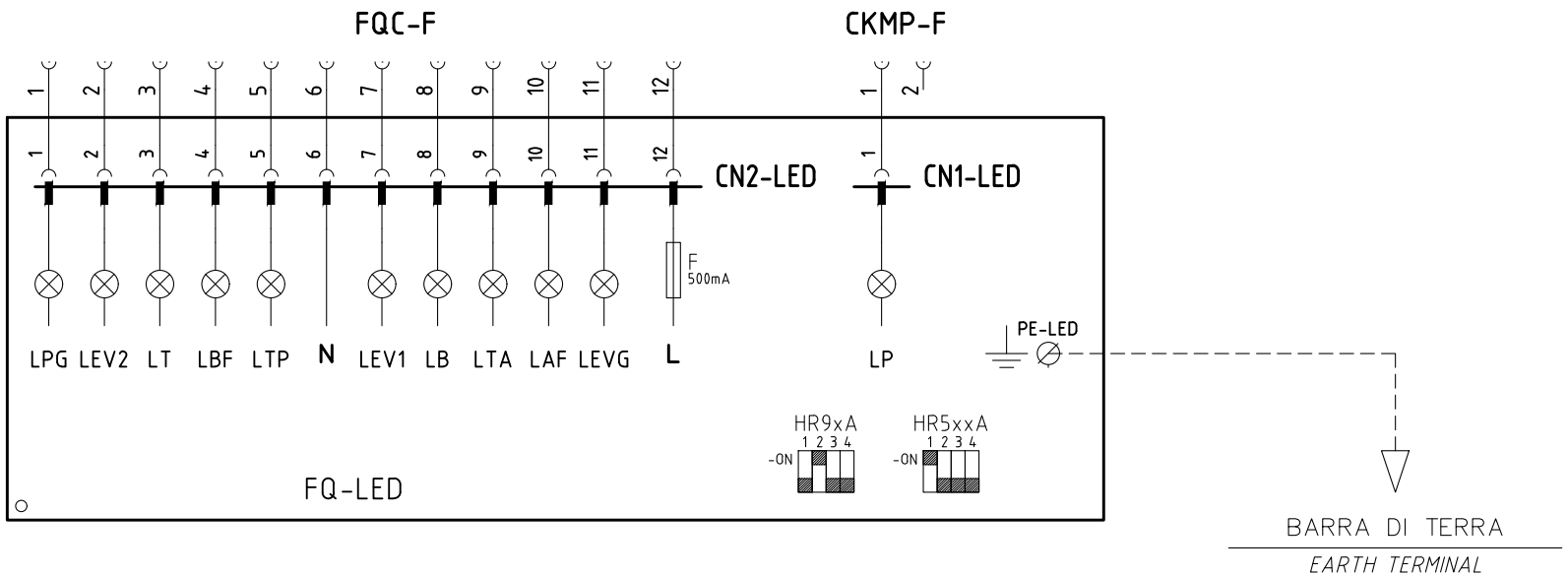


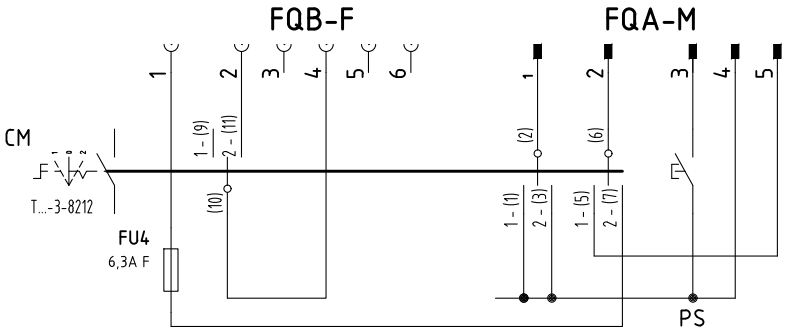


| | | | |
|---|---|---|---|
| Data 22/05/2015 | | PREC. | FOGLIO |
| Revisione 01 | | 11 | 12 |
| Dis. N. 09 – 0432 | | SEGUE | TOTALE |
| | | 13 | 15 |

| 0 | 1 | 2 | 3 | 4 | 5 | 6 | 7 | 8 | 9 |
|---|---|---|---|---|---|---|---|---|---|

| Sigla/Item | Foglio/Sheet | Funzione | Function |
|---|---|---|---|
| 600V RRR0-1-T73 | 7 | REGOLATORE MODULANTE (ALTERNATIVO) | BURNER MODULATOR (ALTERNATIVE) |
| AZL2x.. | 6 | INTERFACCIA UTENTE | USER INTERFACE |
| CM | 1 | COMMUTATORE FUNZIONAMENTO 1)GAS 0)SPENTO 2)GASOLIO | MANUAL OPERATION SWITCH 1)GAS 0)OFF 2)LIGHT OIL |
| CMF | 7 | COMMUT. MANUALE FUNZ. 0)FERMO 1)ALTA FIAMMA 2)BASSA FIAMMA 3)AUTOMATICO | MANUAL SWITCH 0)OFF 1)HIGH FLAME 2)LOW FLAME 3)AUTOMATIC |
| EV1 | 5 | ELETTROVALVOLA GAS LATO RETE | UPSTREAM GAS SOLENOID VALVE |
| EV2 | 5 | ELETTROVALVOLA GAS LATO BRUCIATORE | DOWNSTREAM GAS SOLENOID VALVE |
| EVG 1/2 | 5 | ELETTROVALVOLE GASOLIO | LIGHT OIL ELECTRO VALVES |
| FQ-LED | 12 | PANNELLO FRONTALE (LED) | FRONT PANEL (LED) |
| FU1 | 1 | FUSIBILE AUSILIARIO | AUXILIARY FUSE |
| FU3 | 1 | FUSIBILI LINEA POMPA | PUMP LINE FUSES |
| FU4 | 1 | FUSIBILE AUSILIARIO | AUXILIARY FUSE |
| FU6.3 | 7 | FUSIBILE | FUSE |
| FU-A | 1 | FUSIBILI DI LINEA | LINE FUSES |
| FU-B | 1 | FUSIBILE DI LINEA | LINE FUSE |
| IG | 1 | INTERRUTTORE GENERALE | MAINS SWITCH |
| KA1 | 1 | RELE'' AUSILIARIO | AUXILIARY RELAY |
| KA2 | 1 | RELE'' AUSILIARIO | AUXILIARY RELAY |
| KA3 | 5 | RELE'' AUSILIARIO | AUXILIARY RELAY |
| KM3 HCRMMD | 7 | REGOLATORE MODULANTE (ALTERNATIVO) | BURNER MODULATOR (ALTERNATIVE) |
| KM-P | 2 | CONTATTORE MOTORE POMPA GASOLIO | LIGHT OIL PUMP MOTOR CONTACTOR |
| KM-V | 2 | CONTATTORE MOTORE VENTILATORE | FAN MOTOR CONTACTOR |
| LAF | 6 | LAMPADA SEGNALAZIONE ALTA FIAMMA BRUCIATORE | BURNER IN HIGH FLAME INDICATOR LIGHT |
| LB | 3 | LAMPADA SEGNALAZIONE BLOCCO BRUCIATORE | INDICATOR LIGHT FOR BURNER LOCK-OUT |
| LBF | 5 | LAMPADA SEGNALAZIONE BASSA FIAMMA BRUCIATORE | BURNER IN LOW FLAME INDICATOR LIGHT |
| LEV1 | 5 | LAMPADA SEGNALAZIONE APERTURA [EV1] | INDICATOR LIGHT FOR OPENING OF ELECTRO-VALVE [EV1] |
| LEV2 | 5 | LAMPADA SEGNALAZIONE APERTURA [EV2] | INDICATOR LIGHT FOR OPENING OF ELECTRO-VALVE [EV2] |
| LEVG | 5 | LAMPADA SEGNALAZIONE APERTURA [EVG] | INDICATOR LIGHT FOR OPENING OF ELECTRO-VALVE [EVG] |
| LME73.000xx + PME73.831xxBC | 2 | APPARECCHIATURA DI COMANDO | CONTROL SCHEME |
| LME73.831xxBC | 2 | APPARECCHIATURA DI COMANDO | CONTROL SCHEME |
| LP | 2 | LAMPADA SEGNALAZIONE FUNZIONAMENTO POMPA | INDICATOR LIGHT FOR PUMP OPERATION |
| LPGMIN | 4 | LAMPADA SEGNALAZIONE PRESENZA GAS IN RETE | INDICATOR LIGHT FOR PRESENCE OF GAS IN THE NETWORK |
| LT | 2 | LAMPADA SEGNALAZIONE BLOCCO TERMICO MOTORE VENTILATORE | INDICATOR LIGHT FOR FAN MOTOR OVERLOAD THERMAL CUTOUT |

| 0 | 1 | 2 | 3 | 4 | 5 | 6 | 7 | 8 | 9 |
|---|---|---|---|---|---|---|---|---|---|

| Sigla/Item | Foglio/Sheet | Funzione | Function |
|---|---|---|---|
| LTA | 4 | LAMPADA SEGNALAZIONE TRASFORMATORE DI ACCENSIONE | IGNITION TRANSFORMER INDICATOR LIGHT |
| LTP | 2 | LAMPADA SEGNALAZIONE BLOCCO TERMICO MOTORE VENTILATORE | INDICATOR LIGHT FOR FAN MOTOR OVERLOAD THERMAL CUTOUT |
| MB-DLE..Sx0 | 5 | GRUPPO VALVOLE GAS | GAS VALVES GROUP |
| MB-DLE..Sx2 | 5 | GRUPPO VALVOLE GAS | GAS VALVES GROUP |
| MBC..SEx0 | 5 | GRUPPO VALVOLE GAS (ALTERNATIVO) | GAS VALVES GROUP (ALTERNATIVE) |
| MBC..SEx2 | 5 | GRUPPO VALVOLE GAS (ALTERNATIVO) | GAS VALVES GROUP (ALTERNATIVE) |
| MP | 1 | MOTORE POMPA GASOLIO | LIGHT OIL PUMP MOTOR |
| MV | 1 | MOTORE VENTILATORE | FAN MOTOR |
| PA | 3 | PRESSOSTATO ARIA | AIR PRESSURE SWITCH |
| PGCP | 5 | PRESSOSTATO GAS CONTROLLO PERDITE | GAS LEAKAGE PRESSURE SWITCH |
| PGMAX | 6 | PRESSOSTATO GAS DI MASSIMA PRESSIONE (OPTIONAL) | MAXIMUM PRESSURE GAS SWITCH (OPTIONAL) |
| PGMIN | 4 | PRESSOSTATO GAS DI MINIMA PRESSIONE | MINIMUM GAS PRESSURE SWITCH |
| POMAX | 3 | PRESSOSTATO DI MASSIMA PRESSIONE OLIO (OPTIONAL) | MAXIMUM OIL PRESSURE SWITCH (OTIONAL) |
| PS | 3 | PULSANTE SBLOCCO FIAMMA | FLAME UNLOCK BUTTON |
| PT100 | 8 | SONDA DI TEMPERATURA | TEMPERATURE PROBE |
| RWF40.0xx | 7 | REGOLATORE MODULANTE | BURNER MODULATOR |
| RWF50.2x | 7 | REGOLATORE MODULANTE | BURNER MODULATOR |
| RWF55.5x | 7 | REGOLATORE MODULANTE (ALTERNATIVO) | BURNER MODULATOR (ALTERNATIVE) |
| SD-PRESS | 8 | SONDA DI PRESSIONE | PRESSURE PROBE |
| SD-TEMP. | 8 | SONDA DI TEMPERATURA | TEMPERATURE PROBE |
| SD - 0÷10V | 8 | TRASDUTTORE USCITA IN TENSIONE | TRANSDUCER VOLTAGE OUTPUT |
| SD - 4÷20mA | 8 | TRASDUTTORE USCITA IN CORRENTE | TRANSDUCER CURRENT OUTPUT |
| SQM40.265Axx CDV | 6 | SERVOCOMANDO SERRANDA ARIA | AIR DAMPER ACTUATOR |
| ST | 4 | SERIE TERMOSTATI/PRESSOSTATI | SERIES OF THERMOSTATS OR PRESSURE SWITCHES |
| TA | 4 | TRASFORMATORE DI ACCENSIONE | IGNITION TRANSFORMER |
| TAB | 4 | TERMOSTATO/PRESSOSTATO ALTA-BASSA FIAMMA | HIGH-LOW THERMOSTAT/PRESSURE SWITCHES |
| TC | 8 | TERMOCOPPIA | THERMOCOUPLE |
| TP | 1 | TERMICO MOTORE POMPA | PUMP MOTOR THERMAL |
| TV | 1 | TERMICO MOTORE VENTILATORE | FAN MOTOR THERMAL |
| UV | 6 | SONDA UV RILEVAZIONE FIAMMA | UV FLAME DETECTOR |

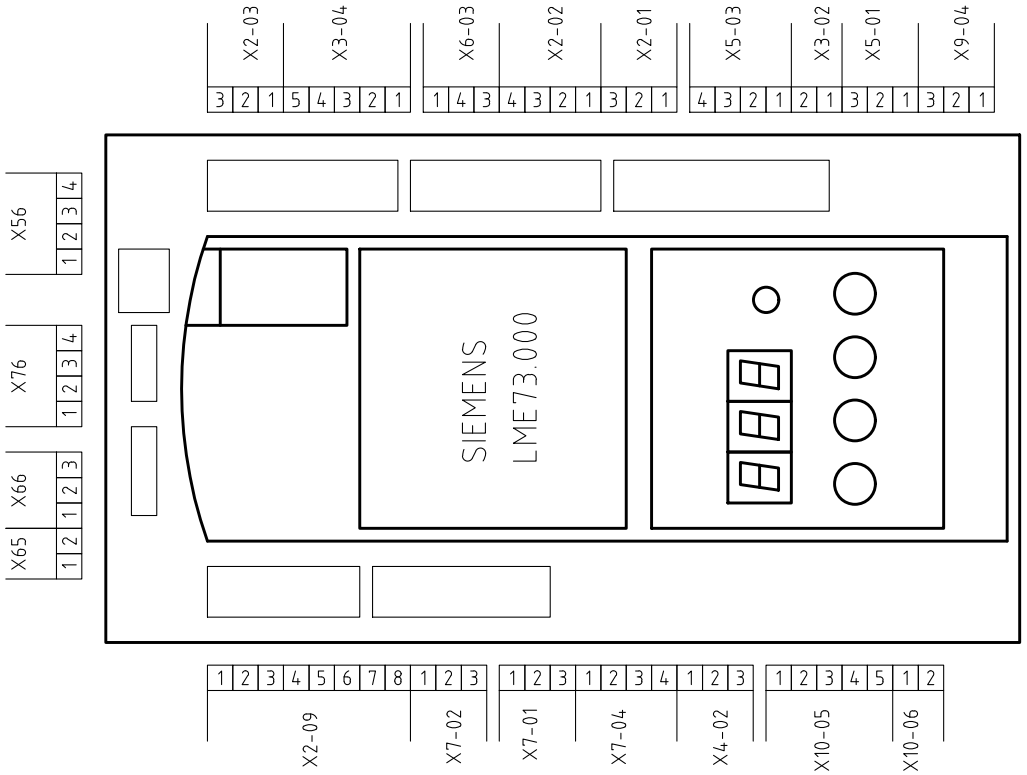


VISTA LATO COMPONENTI

*COMPONENTS SIDE VIEW*

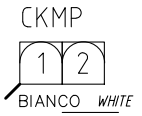


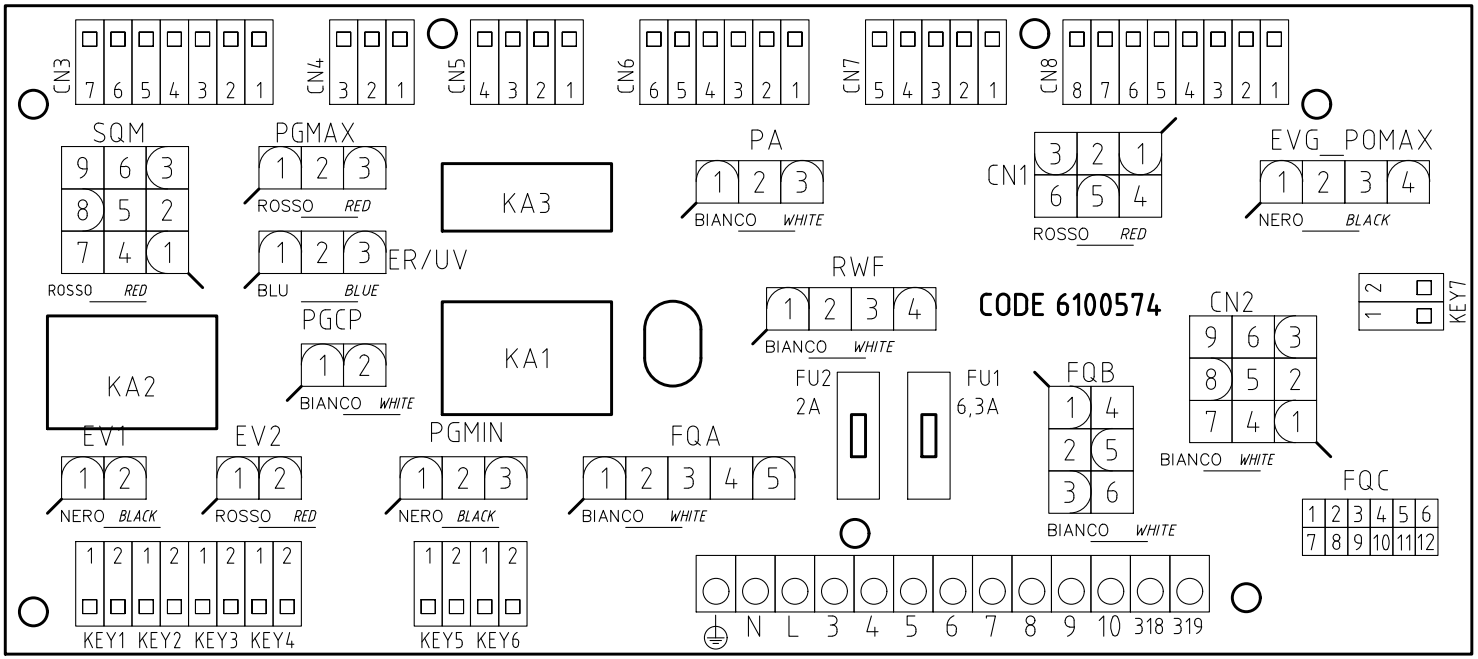


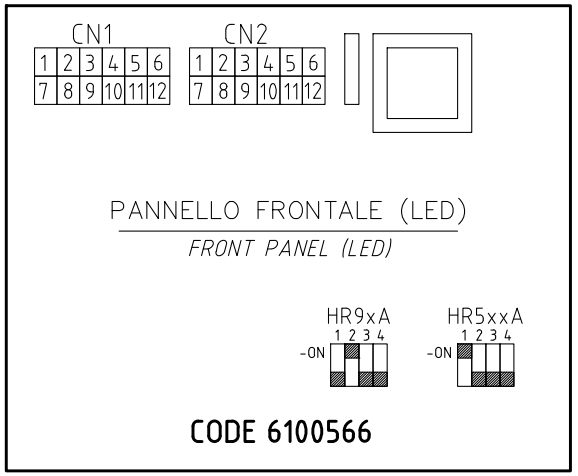


| | | | |
|---|---|---|---|
| Data 22/05/2015 | | PREC. | FOGLIO |
| Revisione 01 | | 14 | 15 |
| Dis. N. 09 – 0432 | | SEGUE | TOTALE |
| | | / | 15 |

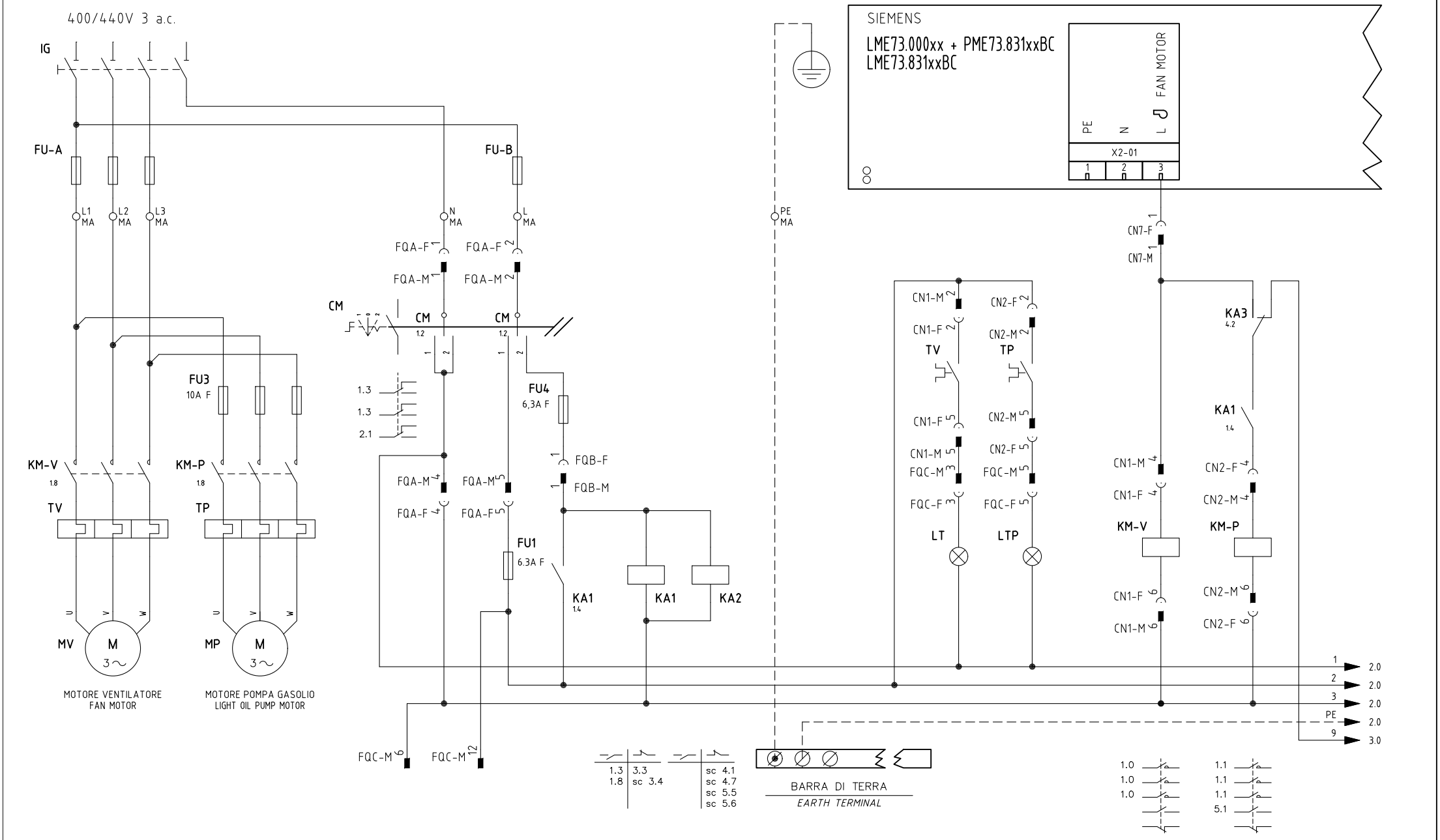


| | | | | | | |
|---|---|---|---|---|---|---|
| UNIGAS | Impianto<br>TIPI/TYPES HP60÷HP73A / HR91A ÷ HR520A / HTP91A÷HTP520A<br>MODELLO/MODEL xG–.PR(MD).S.xx.A.1.xx | Ordine | | Data 30/09/2014 | PREC. / | FOGLIO 1 |
| | | Commessa | Data Controllato 30/09/2014 | Revisione 00 | | |
| | Descrizione<br>WITH LME73.xx + CIRCUIT 6100574<br>(AND MODULATOR RWF55.x / RWF50.2x / 600V / KM3) | Esecutore U. PINTON | Controllato E. CAVALLI | Dis. N. 05 – 1062 | SEGUE 2 | TOTALE 12 |

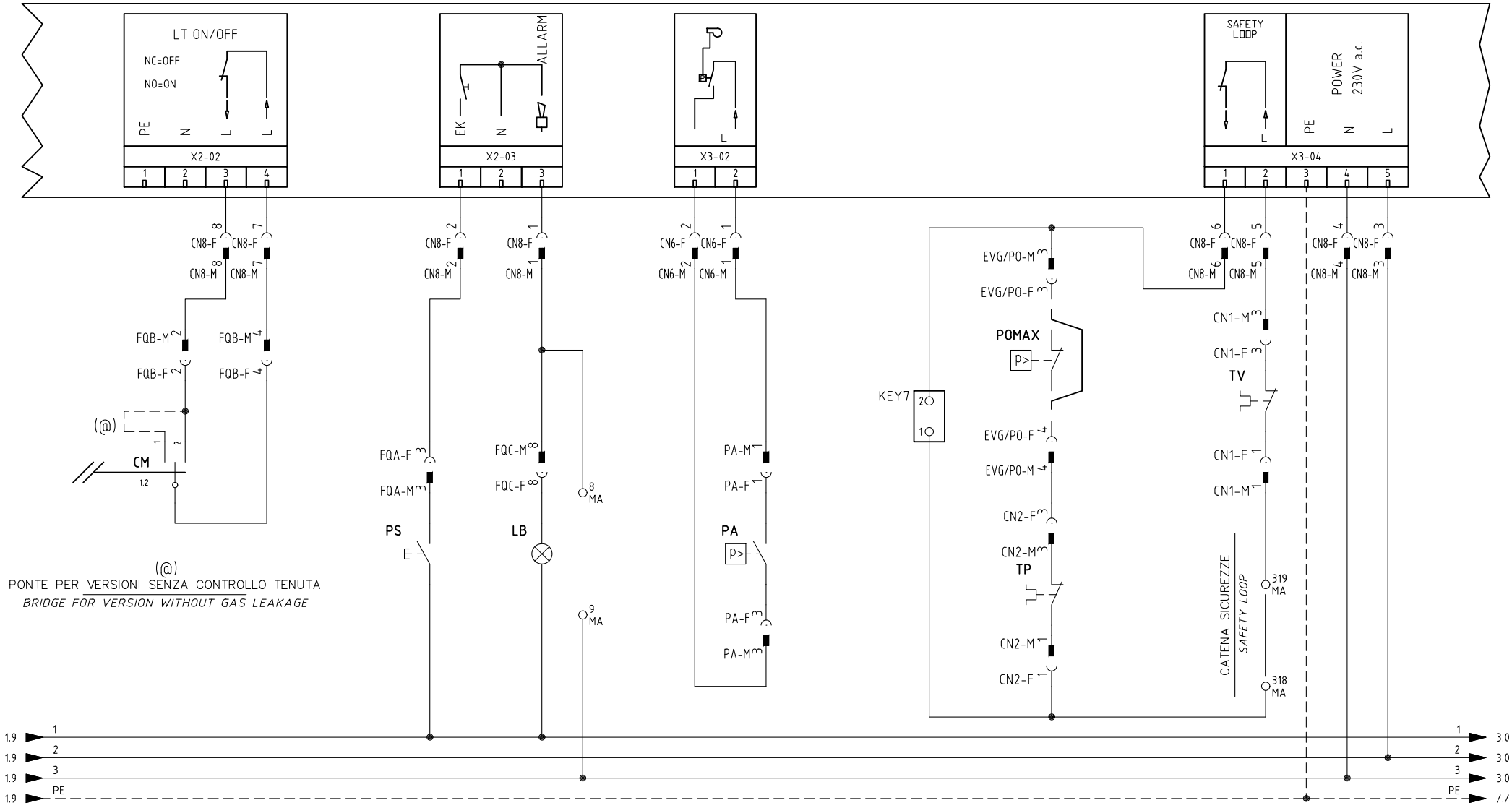


(@)
PONTE PER VERSIONI SENZA CONTROLLO TENUTA
*BRIDGE FOR VERSION WITHOUT GAS LEAKAGE*

| | | | |
|---|---|---|---|
| Data 30/09/2014 | | PREC. | FOGLIO |
| Revisione 00 | | 1 | 2 |
| Dis. N. 05 – 1062 | | SEGUE | TOTALE |
| | | 3 | 12 |

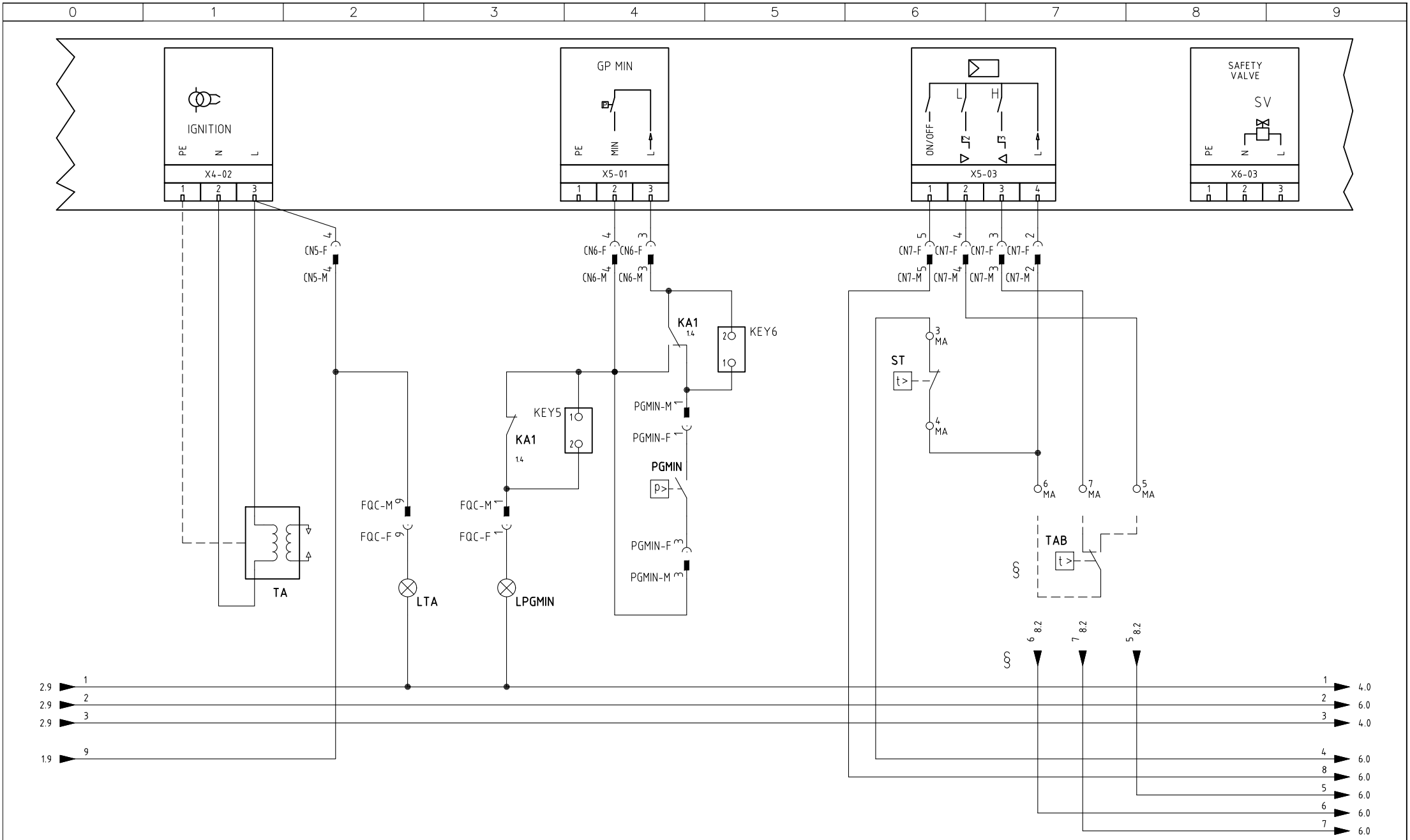


§

VERSIONE (PR) / VERSIONE (MD) CON RWF.. / 600V / KM3

*(PR) VERSION / (MD) VERSION WITH RWF.. / 600V / KM3*

| | | | |
|---|---|---|---|
| Data | 30/09/2014 | PREC. | FOGLIO |
| Revisione | 00 | 2 | 3 |
| Dis. N. | 05 – 1062 | SEGUE | TOTALE |
| | | 4 | 12 |

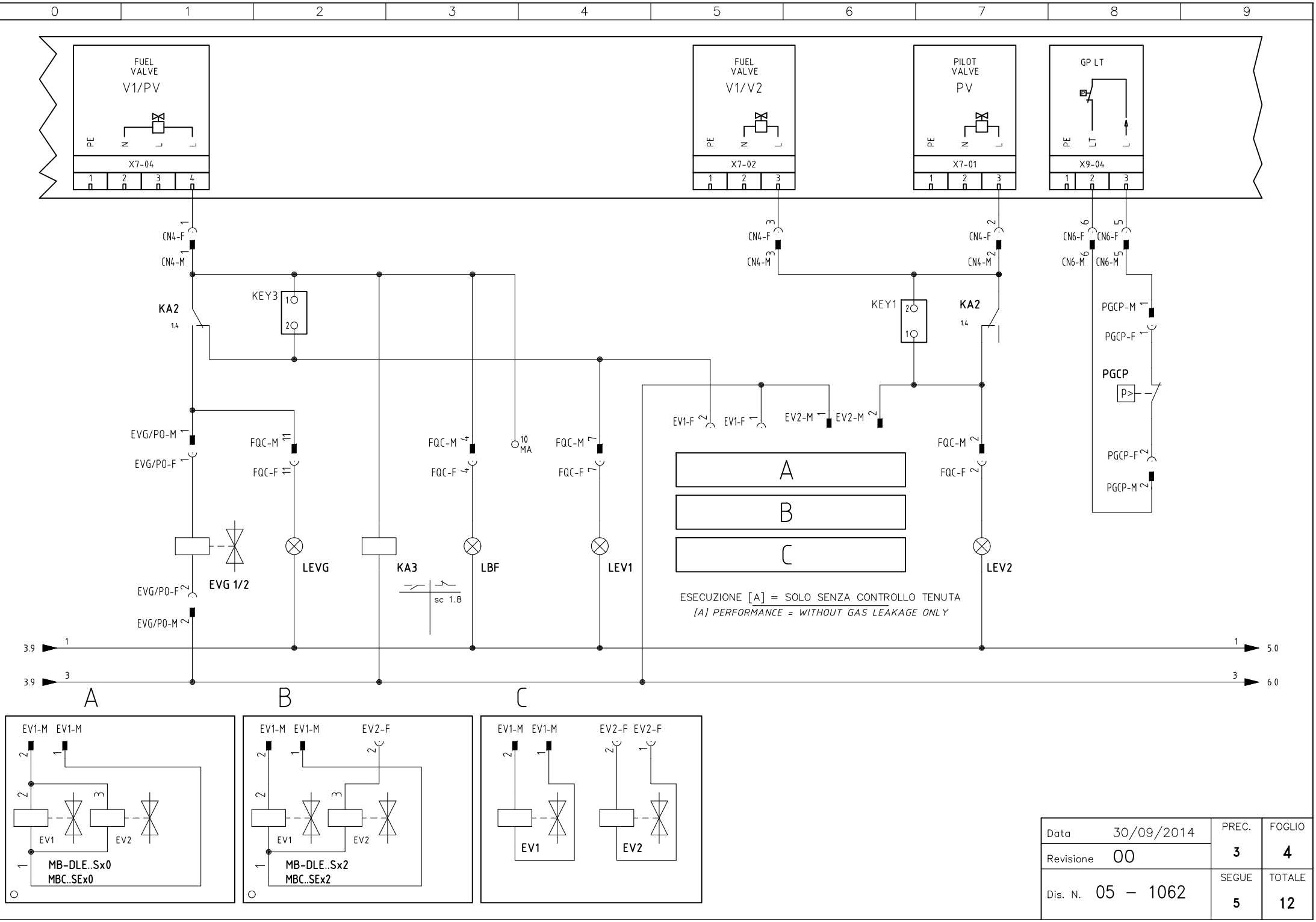


| | | | |
|---|---|---|---|
| Data | 30/09/2014 | PREC. | FOGLIO |
| Revisione | 00 | 3 | 4 |
| Dis. N. | 05 – 1062 | SEGUE | TOTALE |
| | | 5 | 12 |

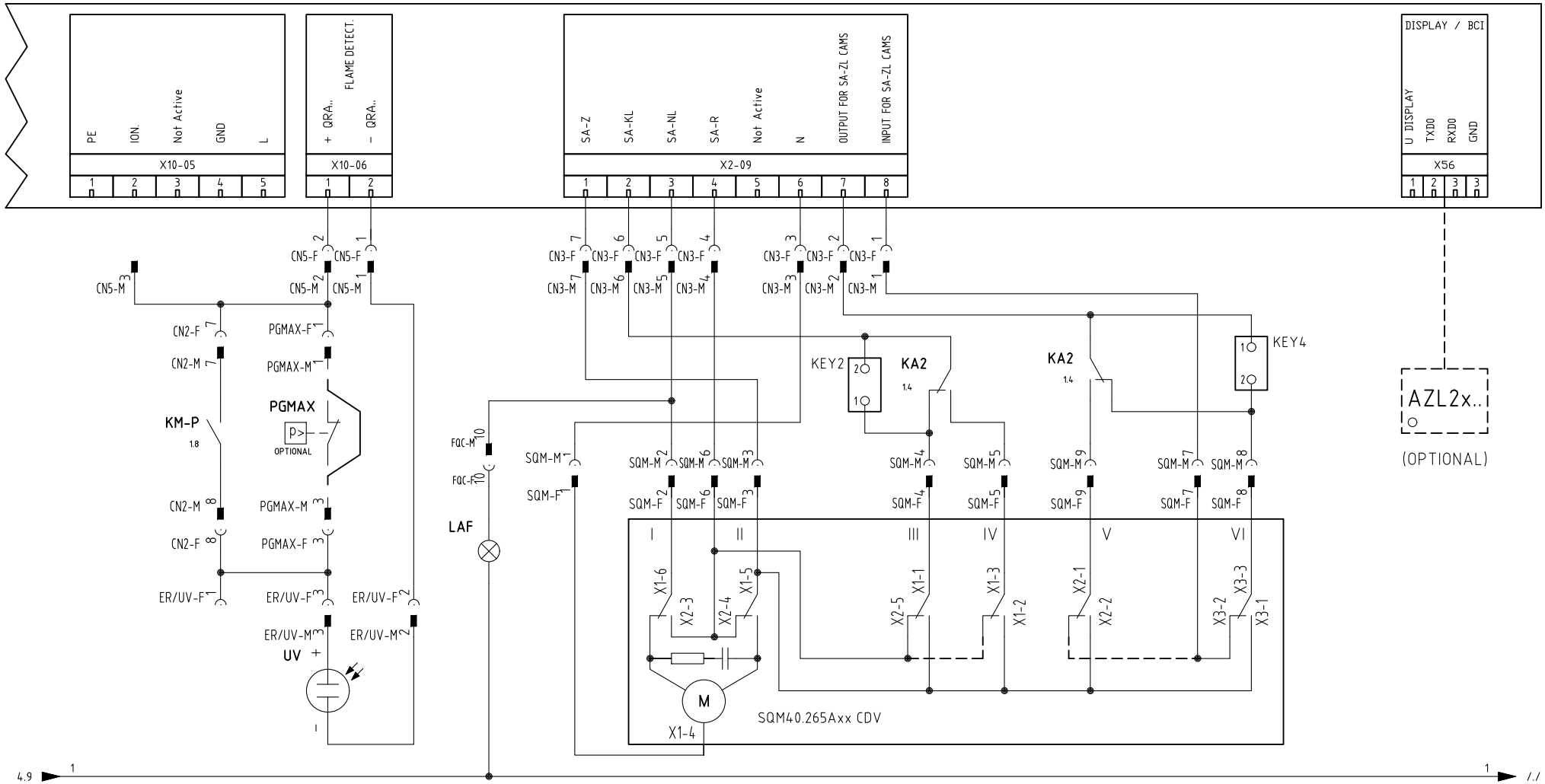


SERVOCOMANDO SERRANDA ARIA

*AIR DAMPER ACTUATOR*

SQM40.265Axx CDV

| | |
|---|---|
| I | ALTA FIAMMA<br>*HIGH FLAME* |
| II | SOSTA<br>*STAND-BY* |
| III | BASSA FIAMMA GAS<br>*GAS LOW FLAME* |
| IV | BASSA FIAMMA GASOLIO<br>*LIGHT OIL LOW FLAME* |
| V | ACCENSIONE GASOLIO<br>*LIGHT OIL IGNITION* |
| VI | ACCENSIONE GAS<br>*GAS IGNITION* |

| | | | |
|---|---|---|---|
| Data | 30/09/2014 | PREC. | FOGLIO |
| Revisione | 00 | 4 | 5 |
| Dis. N. | 05 – 1062 | SEGUE | TOTALE |
| | | 6 | 12 |

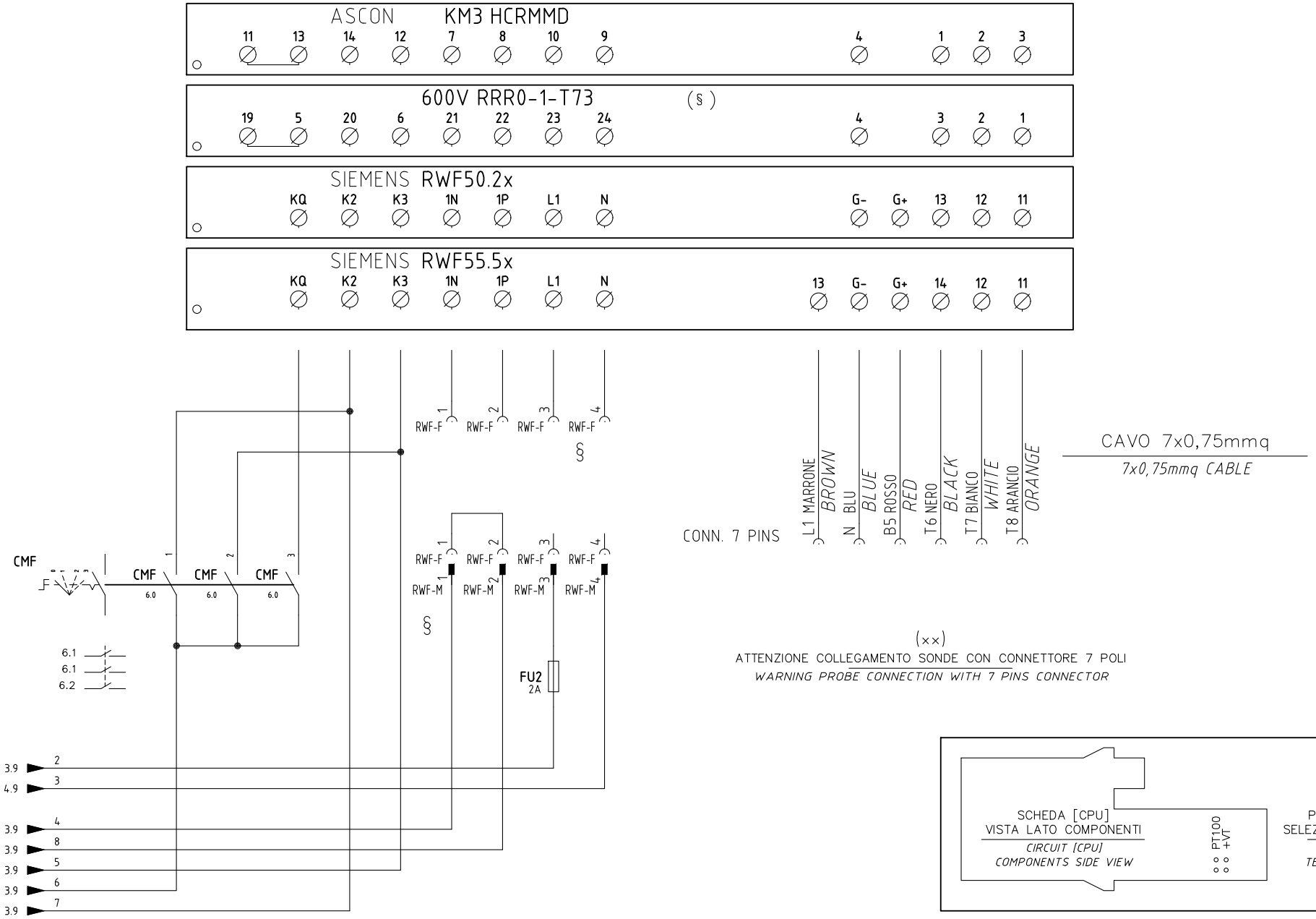


§

VERSIONE (PR) / VERSIONE (MD) CON RWF.. / 600V / KM3

*(PR) VERSION / (MD) VERSION WITH RWF.. / 600V / KM3*

| | | | |
|---|---|---|---|
| Data 30/09/2014 | PREC. | FOGLIO |
| Revisione 00 | 5 | 6 |
| Dis. N. 05 – 1062 | SEGUE | TOTALE |
| | 7 | 12 |

(xx)
ATTENZIONE COLLEGAMENTO SONDE CON CONNETTORE 7 POLI
*WARNING PROBE CONNECTION WITH 7 PINS CONNECTOR*

| KM3 HCRMMD | 600V RRR0-1-T73 | RWF55.5x | RWF50.2x |
|---|---|---|---|
| 2 3 T7 T8 **SD-TEMP.** PT1000 1000 OHM 0°C | PT100 +VT (§) 3 = PT100 / 3 = +VT — PONTICELLO INTERNO PER SELEZIONE SEGNALE MORSETTO 3 / *INTERNAL BRIDGE FOR TERMINAL 3 SELECTION SIGNAL* | 14 11 T6 T8 **SD-TEMP.** SD-TEMP. SIEMENS PT1000 1000 OHM 0°C | 13 11 T6 T8 **SD-TEMP.** SD-TEMP. SIEMENS PT1000 1000 OHM 0°C |
| 1 2 3 T6 T7 T8 **PT100** 100 OHM 0°C | 3 (PT100) 2 1 T6 T7 T8 **PT100** 100 OHM 0°C | 14 12 11 T6 T7 T8 **PT100** 100 OHM 0°C | 13 12 11 T6 T7 T8 **PT100** 100 OHM 0°C |
| 1 2 T6 T7 + − **TC** | 2 1 T7 T8 − + **TC** | 14 12 T6 T7 − + **TC** | |
| 4 1 N T6 (#) mA bar/°C **SD - 4÷20mA** | 4 3 (+VT) 2 1 N T6 T7 T8 (#) mA bar/°C **SD - 4÷20mA** | G- G+ 14 12 N B5 T6 T7 (#) mA bar/°C **SD - 4÷20mA** | G- G+ 13 12 N B5 T6 T7 (#) mA bar/°C **SD - 4÷20mA** |
| 1 2 T6 T7 V bar/°C **SD - 0÷10V** | 2 1 T7 T8 V bar/°C **SD - 0÷10V** | 13 14 L1 T6 V bar/°C **SD - 0÷10V** | 13 11 T6 T8 V bar/°C **SD - 0÷10V** |
| 4 1 2 N T6 T7 (#) M U1 GL BIANCO WHITE VERDE GREEN MARRONE BROWN **SD-PRESS** SIEMENS QBE... | 3 (+VT) 2 1 T6 T7 T8 (#) M U1 GL BIANCO WHITE VERDE GREEN MARRONE BROWN **SD-PRESS** SIEMENS QBE... | 13 G- G+ 14 L1 N B5 T6 (#) M U1 GL BIANCO WHITE VERDE GREEN MARRONE BROWN **SD-PRESS** SIEMENS QBE... 0÷10V | G- G+ 13 11 N B5 T6 T8 (#) M U1 GL BIANCO WHITE VERDE GREEN MARRONE BROWN **SD-PRESS** SIEMENS QBE... 0÷10V |

(#)
COLLEGAMENTO SOLO PER TRASDUTTORI PASSIVI
*TRASDUCER PASSIVE CONNECTION ONLY*

| | | | |
|---|---|---|---|
| Data 30/09/2014 | PREC. 6 | FOGLIO 7 |
| Revisione 00 | | |
| Dis. N. 05 – 1062 | SEGUE 8 | TOTALE 12 |

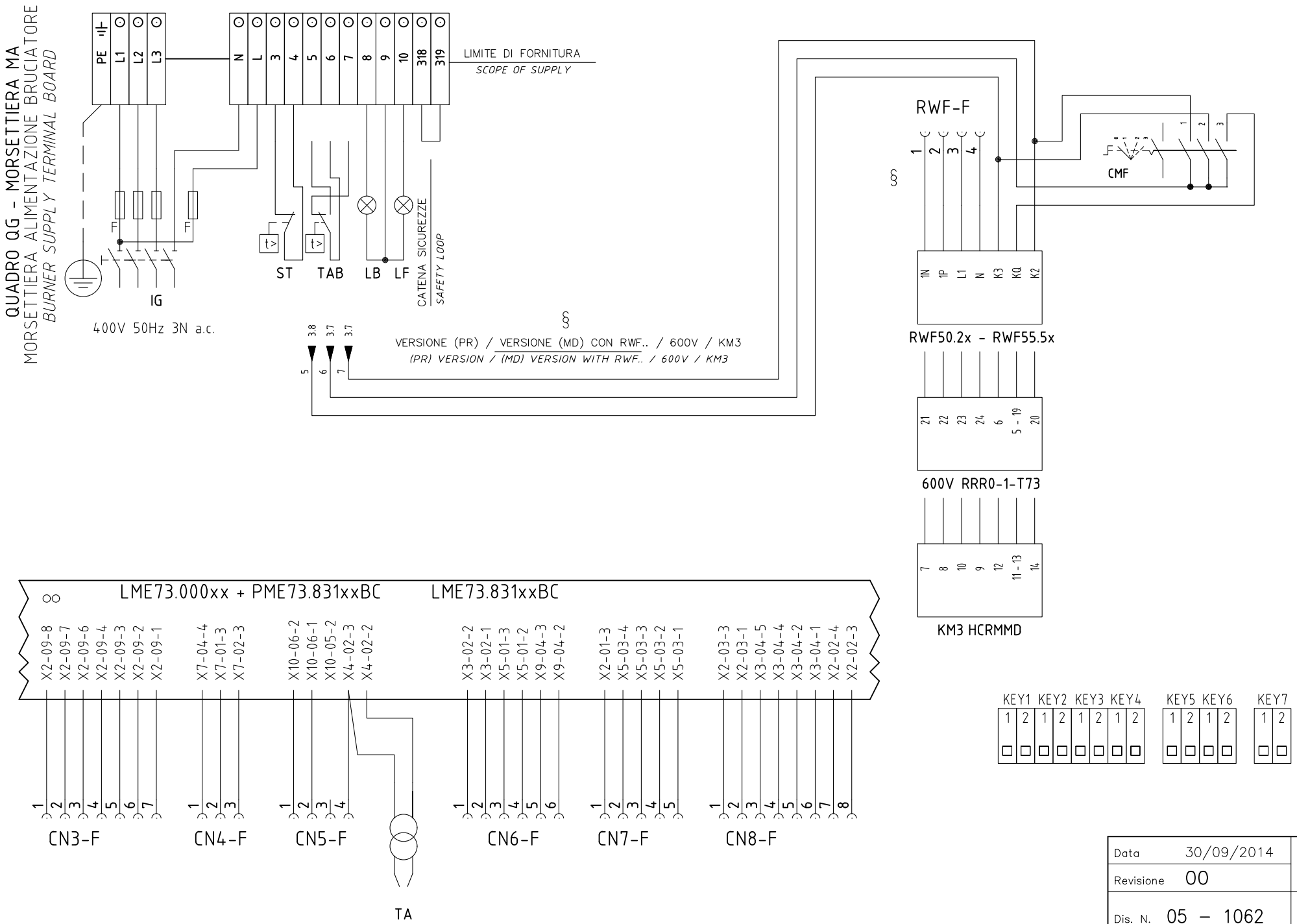


| | | | |
|---|---|---|---|
| Data 30/09/2014 | | PREC. | FOGLIO |
| Revisione 00 | | 7 | 8 |
| Dis. N. 05 – 1062 | | SEGUE | TOTALE |
| | | 9 | 12 |

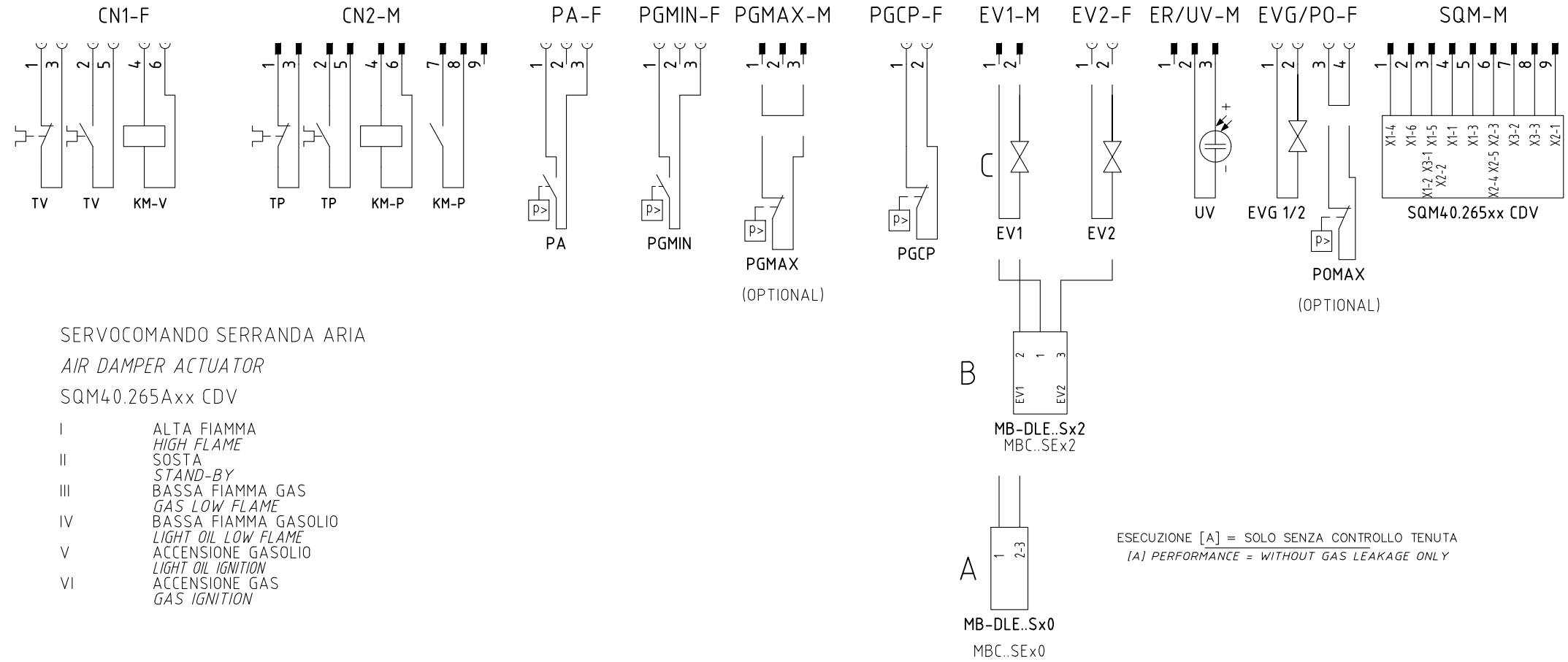


SERVOCOMANDO SERRANDA ARIA

*AIR DAMPER ACTUATOR*

SQM40.265Axx CDV

| | |
|---|---|
| I | ALTA FIAMMA<br>*HIGH FLAME* |
| II | SOSTA<br>*STAND-BY* |
| III | BASSA FIAMMA GAS<br>*GAS LOW FLAME* |
| IV | BASSA FIAMMA GASOLIO<br>*LIGHT OIL LOW FLAME* |
| V | ACCENSIONE GASOLIO<br>*LIGHT OIL IGNITION* |
| VI | ACCENSIONE GAS<br>*GAS IGNITION* |

ESECUZIONE [A] = SOLO SENZA CONTROLLO TENUTA

*[A] PERFORMANCE = WITHOUT GAS LEAKAGE ONLY*

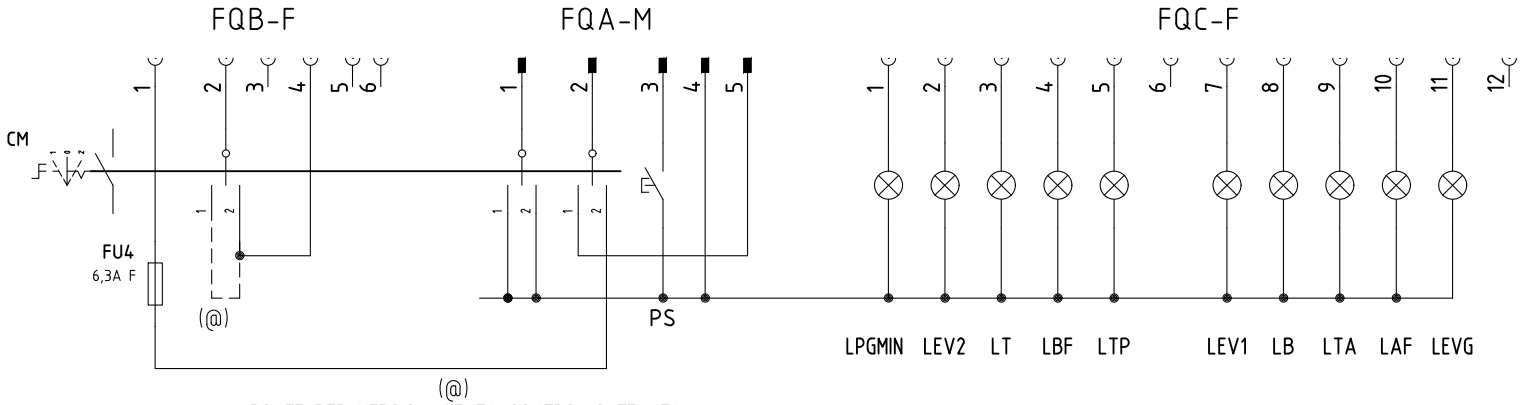


(@)

PONTE PER VERSIONI SENZA CONTROLLO TENUTA

*BRIDGE FOR VERSION WITHOUT GAS LEAKAGE*

| | | | |
|---|---|---|---|
| Data 30/09/2014 | | PREC. | FOGLIO |
| Revisione 00 | | 8 | 9 |
| Dis. N. 05 – 1062 | | SEGUE | TOTALE |
| | | 10 | 12 |

| 0 | 1 | 2 | 3 | 4 | 5 | 6 | 7 | 8 | 9 |
|---|---|---|---|---|---|---|---|---|---|

| Sigla/Item | Foglio/Sheet | Funzione | Function |
|---|---|---|---|
| 600V RRR0-1-T73 | 6 | REGOLATORE MODULANTE (ALTERNATIVO) | BURNER MODULATOR (ALTERNATIVE) |
| AZL2x.. | 5 | INTERFACCIA UTENTE | USER INTERFACE |
| CM | 1 | COMMUTATORE FUNZIONAMENTO 1)GAS 0)SPENTO 2)GASOLIO | MANUAL OPERATION SWITCH 1)GAS 0)OFF 2)LIGHT OIL |
| CMF | 6 | COMMUT. MANUALE FUNZ. 0)FERMO 1)ALTA FIAMMA 2)BASSA FIAMMA 3)AUTOMATICO | MANUAL SWITCH 0)OFF 1)HIGH FLAME 2)LOW FLAME 3)AUTOMATIC |
| EV1 | 4 | ELETTROVALVOLA GAS LATO RETE | UPSTREAM GAS SOLENOID VALVE |
| EV2 | 4 | ELETTROVALVOLA GAS LATO BRUCIATORE | DOWNSTREAM GAS SOLENOID VALVE |
| EVG 1/2 | 4 | ELETTROVALVOLE GASOLIO | LIGHT OIL ELECTRO VALVE |
| FU1 | 1 | FUSIBILE LINEA AUSILIARI | AUXILIARY LINE FUSE |
| FU2 | 6 | FUSIBILE | FUSE |
| FU3 | 1 | FUSIBILI LINEA POMPA | PUMP LINE FUSES |
| FU4 | 1 | FUSIBILE AUSILIARIO | AUXILIARY FUSE |
| FU-A | 1 | FUSIBILI DI LINEA | LINE FUSES |
| FU-B | 1 | FUSIBILE DI LINEA | LINE FUSE |
| IG | 1 | INTERRUTTORE GENERALE | MAINS SWITCH |
| KA1 | 1 | RELE' AUSILIARIO | AUXILIARY RELAY |
| KA2 | 1 | RELE' AUSILIARIO | AUXILIARY RELAY |
| KA3 | 4 | RELE' AUSILIARIO | AUXILIARY RELAY |
| KM3 HCRMMD | 6 | REGOLATORE MODULANTE (ALTERNATIVO) | BURNER MODULATOR (ALTERNATIVE) |
| KM-P | 1 | CONTATTORE MOTORE POMPA GASOLIO | LIGHT OIL PUMP MOTOR CONTACTOR |
| KM-V | 1 | CONTATTORE MOTORE VENTILATORE | FAN MOTOR CONTACTOR |
| LAF | 5 | LAMPADA SEGNALAZIONE ALTA FIAMMA BRUCIATORE | BURNER IN HIGH FLAME INDICATOR LIGHT |
| LB | 2 | LAMPADA SEGNALAZIONE BLOCCO BRUCIATORE | INDICATOR LIGHT FOR BURNER LOCK-OUT |
| LBF | 4 | LAMPADA SEGNALAZIONE BASSA FIAMMA BRUCIATORE | BURNER IN LOW FLAME INDICATOR LIGHT |
| LEV1 | 4 | LAMPADA SEGNALAZIONE APERTURA [EV1] | INDICATOR LIGHT FOR OPENING OF ELECTRO-VALVE [EV1] |
| LEV2 | 4 | LAMPADA SEGNALAZIONE APERTURA [EV2] | INDICATOR LIGHT FOR OPENING OF ELECTRO-VALVE [EV2] |
| LEVG | 4 | LAMPADA SEGNALAZIONE APERTURA [EVG] | INDICATOR LIGHT FOR OPENING OF ELECTRO-VALVE [EVG] |
| LME73.000xx + PME73.831xxBC | 1 | APPARECCHIATURA DI COMANDO | CONTROL SCHEME |
| LME73.831xxBC | 1 | APPARECCHIATURA DI COMANDO | CONTROL SCHEME |
| LPGMIN | 3 | LAMPADA SEGNALAZIONE PRESENZA GAS IN RETE | INDICATOR LIGHT FOR PRESENCE OF GAS IN THE NETWORK |
| LT | 1 | LAMPADA SEGNALAZIONE BLOCCO TERMICO MOTORE VENTILATORE | INDICATOR LIGHT FOR FAN MOTOR OVERLOAD THERMAL CUTOUT |
| LTA | 3 | LAMPADA SEGNALAZIONE TRASFORMATORE DI ACCENSIONE | IGNITION TRANSFORMER INDICATOR LIGHT |
| LTP | 1 | LAMPADA SEGNALAZIONE BLOCCO TERMICO MOTORE VENTILATORE | INDICATOR LIGHT FOR FAN MOTOR OVERLOAD THERMAL CUTOUT |

| 0 | 1 | 2 | 3 | 4 | 5 | 6 | 7 | 8 | 9 |
|---|---|---|---|---|---|---|---|---|---|

| Sigla/Item | Foglio/Sheet | Funzione | Function |
|---|---|---|---|
| MB-DLE..Sx0 | 4 | GRUPPO VALVOLE GAS | GAS VALVES GROUP |
| MB-DLE..Sx2 | 4 | GRUPPO VALVOLE GAS | GAS VALVES GROUP |
| MBC..SEx0 | 4 | GRUPPO VALVOLE GAS (ALTERNATIVO) | GAS VALVES GROUP (ALTERNATIVE) |
| MBC..SEx2 | 4 | GRUPPO VALVOLE GAS (ALTERNATIVO) | GAS VALVES GROUP (ALTERNATIVE) |
| MP | 1 | MOTORE POMPA GASOLIO | LIGHT OIL PUMP MOTOR |
| MV | 1 | MOTORE VENTILATORE | FAN MOTOR |
| PA | 2 | PRESSOSTATO ARIA | AIR PRESSURE SWITCH |
| PGCP | 4 | PRESSOSTATO GAS CONTROLLO PERDITE (OPTIONAL) | GAS LEAKAGE PRESSURE SWITCH (OPTIONAL) |
| PGMAX | 5 | PRESSOSTATO GAS DI MASSIMA PRESSIONE (OPTIONAL) | MAXIMUM PRESSURE GAS SWITCH (OPTIONAL) |
| PGMIN | 3 | PRESSOSTATO GAS DI MINIMA PRESSIONE | MINIMUM GAS PRESSURE SWITCH |
| POMAX | 2 | PRESSOSTATO DI MASSIMA PRESSIONE OLIO (OPTIONAL) | MAXIMUM OIL PRESSURE SWITCH (OTIONAL) |
| PS | 2 | PULSANTE SBLOCCO FIAMMA | FLAME UNLOCK BUTTON |
| PT100 | 7 | SONDA DI TEMPERATURA | TEMPERATURE PROBE |
| RWF50.2x | 6 | REGOLATORE MODULANTE | BURNER MODULATOR |
| RWF55.5x | 6 | REGOLATORE MODULANTE (ALTERNATIVO) | BURNER MODULATOR (ALTERNATIVE) |
| SD-PRESS | 7 | SONDA DI PRESSIONE | PRESSURE PROBE |
| SD-TEMP. | 7 | SONDA DI TEMPERATURA | TEMPERATURE PROBE |
| SD - 0÷10V | 7 | TRASDUTTORE USCITA IN TENSIONE | TRANSDUCER VOLTAGE OUTPUT |
| SD - 4÷20mA | 7 | TRASDUTTORE USCITA IN CORRENTE | TRANSDUCER CURRENT OUTPUT |
| SQM40.265Axx CDV | 5 | SERVOCOMANDO SERRANDA ARIA | AIR DAMPER ACTUATOR |
| ST | 3 | SERIE TERMOSTATI/PRESSOSTATI | SERIES OF THERMOSTATS OR PRESSURE SWITCHES |
| TA | 3 | TRASFORMATORE DI ACCENSIONE | IGNITION TRANSFORMER |
| TAB | 3 | TERMOSTATO/PRESSOSTATO ALTA-BASSA FIAMMA | HIGH-LOW THERMOSTAT/PRESSURE SWITCHES |
| TC | 7 | TERMOCOPPIA | THERMOCOUPLE |
| TP | 1 | TERMICO MOTORE POMPA | PUMP MOTOR THERMAL |
| TV | 1 | TERMICO MOTORE VENTILATORE | FAN MOTOR THERMAL |
| UV | 5 | SONDA UV RILEVAZIONE FIAMMA | UV FLAME DETECTOR |

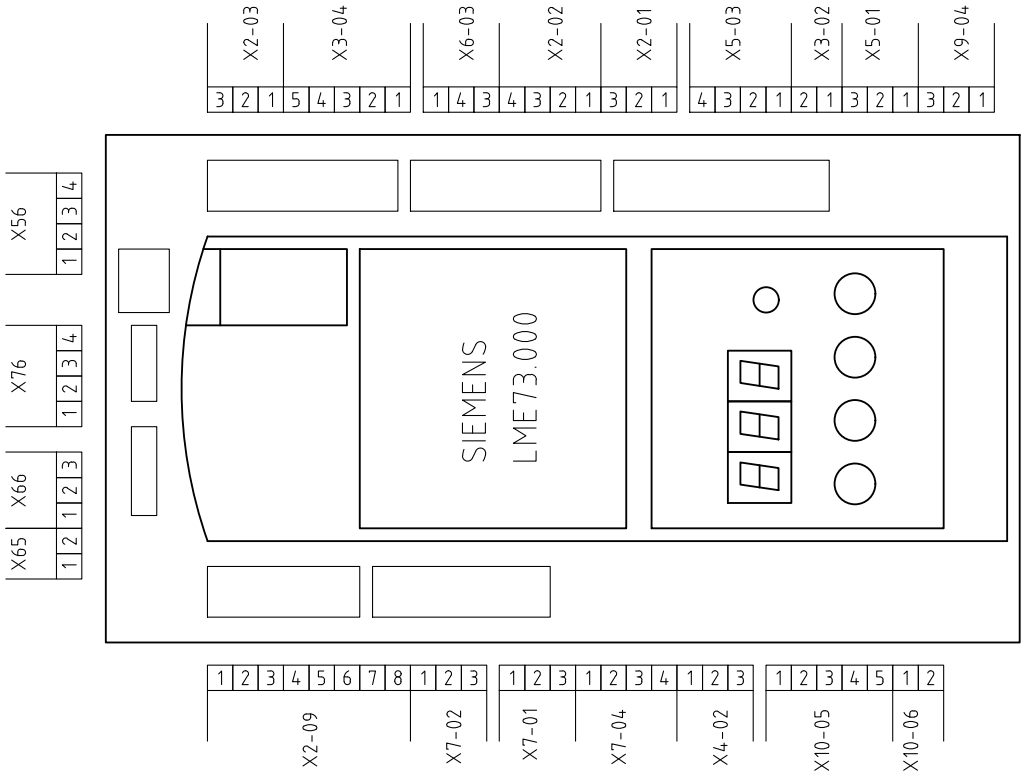


VISTA LATO COMPONENTI

*COMPONENTS SIDE VIEW*

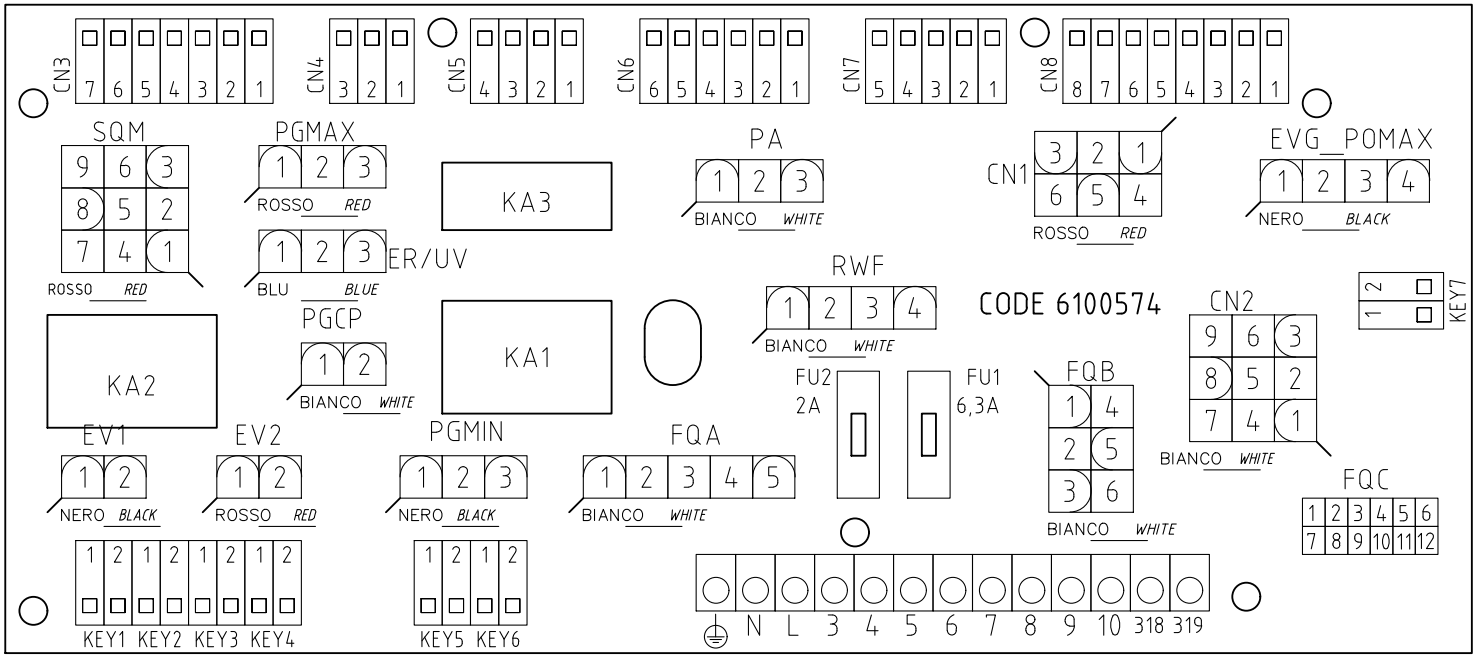


| | | | |
|---|---|---|---|
| Data | 30/09/2014 | PREC. | FOGLIO |
| Revisione | 00 | 11 | 12 |
| Dis. N. | 05 – 1062 | SEGUE | TOTALE |
| | | / | 12 |