HS5 - HS10 - HS18

Single stage Gas - light oil dual fuel burners

MANUAL OF INSTALLATION - USE - MAINTENANCE

CIB UNIGAS

BURNERS - BRUCIATORI - BRULERS - BRENNER - QUEMADORES - ГОРЕЛКИ

M039118CB Rel. 1.1 03/2008

TABLE OF CONTENTS

WARNINGS **3**

PART I: INSTALLATION **5**

GENERAL FEATURES 5
How to interpret the burner "Performance curve" *5*
Matching the burner to the boiler *6*
Burner model identification 7
Specifications *7*
Overall dimensions *8*
Performance Curves *8*
Pressure in the network - gas rate curves *9*

MOUNTINGS AND CONNECTIONS 10
Packing *10*
Fitting the burner to the boiler *10*
Gas train connections *11*
Assembling the gas grain *11*
Hydraulic diagrams for light oil supplying circuits *13*
Light oil piping installation diagram *14*
Sizing the light oil pipeline *15*
About the use of fuel pumps *15*
Light oil pumps *16*
Connecting the light oil flexible hoses *16*
Electrical connections *17*
Rotation of fan motor and pump motor *17*

ADJUSTMENTS 18
Combustion head gas pressure curves depending on the flow rate *18*
Measuring the gas pressure in the combustion head *18*
Pressure in combustion head - gas rate curves *19*
VPS504 Gas proving system *19*
Adjustments - brief description *20*
Adjustment procedure for light oil operation *20*
Adjustment procedure for gas operation *22*
Adjusting the combsution head *23*
Calibration of air and gas pressure switches *23*
Calibration of air pressure switch *23*
Calibration of minimum gas pressure switch *23*

PART II: OPERATION **24**

OPERATION 24

PART III: MAINTENANCE **25**

ROUTINE MAINTENANCE 25
Removing the filter in the MULTIBLOC DUNGS MB-DLE 405..412 ..... *25*
Light oil filter maintenance *26*
Removing the combustion head *26*
Adjusting the electrodes position *27*
Cleaning and replacing the detection photocell *27*
Checking the detection current *28*
Seasonal stop *28*
Burner disposal *28*

TROUBLESHOOTING 29

ELECTRICAL WIRING DIAGRAMS 30

SPARE PARTS 38

APPENDIX

DANGERS, WARNINGS AND NOTES OF CAUTION

THIS MANUAL IS SUPPLIED AS AN INTEGRAL AND ESSENTIAL PART OF THE PRODUCT AND MUST BE DELIVERED TO THE USER.

INFORMATION INCLUDED IN THIS SECTION ARE DEDICATED BOTH TO THE USER AND TO PERSONNEL FOLLOWING PRODUCT INSTALLATION AND MAINTENANCE.

THE USER WILL FIND FURTHER INFORMATION ABOUT OPERATING AND USE RESTRICTIONS, IN THE SECOND SECTION OF THIS MANUAL. WE HIGHLY RECOMMEND TO READ IT.

CAREFULLY KEEP THIS MANUAL FOR FUTURE REFERENCE.

1) GENERAL INTRODUCTION

- The equipment must be installed in compliance with the regulations in force, following the manufacturer's instructions, by qualified personnel.
- Qualified personnel means those having technical knowledge in the field of components for civil or industrial heating systems, sanitary hot water generation and particularly service centres authorised by the manufacturer.
- Improper installation may cause injury to people and animals, or damage to property, for which the manufacturer cannot be held liable.
- Remove all packaging material and inspect the equipment for integrity.

In case of any doubt, do not use the unit - contact the supplier.

The packaging materials (wooden crate, nails, fastening devices, plastic bags, foamed polystyrene, etc), should not be left within the reach of children, as they may prove harmful.

- Before any cleaning or servicing operation, disconnect the unit from the mains by turning the master switch OFF, and/or through the cut-out devices that are provided.
- Make sure that inlet or exhaust grilles are unobstructed.
- In case of breakdown and/or defective unit operation, disconnect the unit. Make no attempt to repair the unit or take any direct action.

Contact qualified personnel only.

Units shall be repaired exclusively by a servicing centre, duly authorised by the manufacturer, with original spare parts and accessories.

Failure to comply with the above instructions is likely to impair the unit's safety.

To ensure equipment efficiency and proper operation, it is essential that maintenance operations are performed by qualified personnel at regular intervals, following the manufacturer's instructions.

- When a decision is made to discontinue the use of the equipment, those parts likely to constitute sources of danger shall be made harmless.
- In case the equipment is to be sold or transferred to another user, or in case the original user should move and leave the unit behind, make sure that these instructions accompany the equipment at all times so that they can be consulted by the new owner and/or the installer.
- This unit shall be employed exclusively for the use for which it is meant. Any other use shall be considered as improper and, therefore, dangerous.

The manufacturer shall not be held liable, by agreement or otherwise, for damages resulting from improper installation, use and failure to comply with the instructions supplied by the manufacturer.The occurrence of any of the following circustances may cause explosions, polluting unburnt gases (example: carbon monoxide CO), burns, serious harm to people, animals and things:

- Failure to comply with one of the WARNINGS in this chapter
- Incorrect handling, installation, adjustment or maintenance of the burner
- Incorrect use of the burner or incorrect use of its parts or optional supply

2) SPECIAL INSTRUCTIONS FOR BURNERS

- The burner should be installed in a suitable room, with ventilation openings complying with the requirements of the regulations in force, and sufficient for good combustion.
- Only burners designed according to the regulations in force should be used.
- This burner should be employed exclusively for the use for which it was designed.
- Before connecting the burner, make sure that the unit rating is the same as delivery mains (electricity, gas oil, or other fuel).
- Observe caution with hot burner components. These are, usually, near to the flame and the fuel pre-heating system, they become hot during the unit operation and will remain hot for some time after the burner has stopped.

When the decision is made to discontinue the use of the burner, the user shall have qualified personnel carry out the following operations:

a Remove the power supply by disconnecting the power cord from the mains.

b Disconnect the fuel supply by means of the hand-operated shut-off valve and remove the control handwheels from their spindles.

Special warnings

- Make sure that the burner has, on installation, been firmly secured to the appliance, so that the flame is generated inside the appliance fire-box.
- Before the burner is started and, thereafter, at least once a year, have qualified personnel perform the following operations:

a set the burner fuel flow rate depending on the heat input of the appliance;

b set the flow rate of the combustion-supporting air to obtain a combustion efficiency level at least equal to the lower level required by the regulations in force;

c check the unit operation for proper combustion, to avoid any harmful or polluting unburnt gases in excess of the limits permitted by the regulations in force;

d make sure that control and safety devices are operating properly;

e make sure that exhaust ducts intended to discharge the products of combustion are operating properly;

f on completion of setting and adjustment operations, make sure that all mechanical locking devices of controls have been duly tightened;

g make sure that a copy of the burner use and maintenance instructions is available in the boiler room.

- In case of a burner shut-down, reser the control box by means of the RESET pushbutton. If a second shut-down takes place, call the Technical Service, **without trying to RESET further**.
- The unit shall be operated and serviced by qualified personnel only, in compliance with the regulations in force.

3) GENERAL INSTRUCTIONS DEPENDING ON FUEL USED

3a) ELECTRICAL CONNECTION

- For safety reasons the unit must be efficiently earthed and installed as required by current safety regulations.
- It is vital that all saftey requirements are met. In case of any doubt, ask for an accurate inspection of electrics by qualified personnel, since the manufacturer cannot be held liable for damages that may be caused by failure to correctly earth the equipment.
- Qualified personnel must inspect the system to make sure that it is adequate to take the maximum power used by the equipment shown on the equipment rating plate. In particular, make sure that the system cable cross section is adequate for the power absorbed by the unit.
- No adaptors, multiple outlet sockets and/or extension cables are permitted to connect the unit to the electric mains.
- An omnipolar switch shall be provided for connection to mains, as required by the current safety regulations.
- The use of any power-operated component implies observance of a few basic rules, for example:
  - do not touch the unit with wet or damp parts of the body and/or with bare feet;
  - do not pull electric cables;
  - do not leave the equipment exposed to weather (rain, sun, etc.) unless expressly required to do so;
  - do not allow children or inexperienced persons to use equipment;
- The unit input cable shall not be replaced by the user.
  In case of damage to the cable, switch off the unit and contact qualified personnel to replace.
  When the unit is out of use for some time the electric switch supplying all the power-driven components in the system (i.e. pumps, burner, etc.) should be switched off.

3b) FIRING WITH GAS, LIGHT OIL OR OTHER FUELS

GENERAL

- The burner shall be installed by qualified personnel and in compliance with regulations and provisions in force; wrong installation can cause injuries to people and animals, or damage to property, for which the manufacturer cannot be held liable.
- Before installation, it is recommended that all the fuel supply system pipes be carefully cleaned inside, to remove foreign matter that might impair the burner operation.
- Before the burner is commissioned, qualified personnel should inspect the following:

a the fuel supply system, for proper sealing;
b the fuel flow rate, to make sure that it has been set based on the firing rate required of the burner;
c the burner firing system, to make sure that it is supplied for the designed fuel type;
d the fuel supply pressure, to make sure that it is included in the range shown on the rating plate;
e the fuel supply system, to make sure that the system dimensions are adequate to the burner firing rate, and that the system is equipped with all the safety and control devices required by the regulations in force.

- When the burner is to remain idle for some time, the fuel supply tap or taps should be closed.

SPECIAL INSTRUCTIONS FOR USING GAS

Have qualified personnel inspect the installation to ensure that:

a the gas delivery line and train are in compliance with the regulations and provisions in force;
b all gas connections are tight;
c the boiler room ventilation openings are such that they ensure the air supply flow required by the current regulations, and in any case are sufficient for proper combustion.

- Do not use gas pipes to earth electrical equipment.
- Never leave the burner connected when not in use. Always shut the gas valve off.
- In case of prolonged absence of the user, the main gas delivery valve to the burner should be shut off.

Precautions if you can smell gas

a do not operate electric switches, the telephone, or any other item likely to generate sparks;
b immediately open doors and windows to create an air flow to purge the room;
c close the gas valves;
d contact qualified personnel.

- Do not obstruct the ventilation openings of the room where gas appliances are installed, to avoid dangerous conditions such as the development of toxic or explosive mixtures.

DIRECTIVES AND STANDARDS

Gas burners

European directives

-Regulation 2016/426/UE (appliances burning gaseous fuels)
-2014/35/UE (Low Tension Directive)
-2014/30/UE (Electromagnetic compatibility Directive)
-2006/42/EC (Machinery Directive)

Harmonized standards

-UNI EN 676 (Automatic forced draught burners for gaseous fuels)
-EN 55014-1 (Electromagnetic compatibility- Requirements for house hold appliances, electric tools and similar apparatus)
-EN 60204-1:2006 (Safety of machinery – Electrical equipment of machines.)
-CEI EN 60335-1 (Specification for safety of household and similar electrical appliances);
-CEI EN 60335-2-102 (Household and similar electrical appliances. Safety. Particular requirements for gas, oil and solid-fuel burning appliances having electrical connections).
-UNI EN ISO 12100:2010 (Safety of machinery - General principles for design - Risk assessment and risk reduction);

Light oil burners

European directives

-2014/35/UE (Low Tension Directive)
-2014/30/UE (Electromagnetic compatibility Directive)
-2006/42/EC (Machinery Directive)

Harmonized standards

-UNI EN 267-2011(Automatic forced draught burners for liquid fuels)
-EN 55014-1 (Electromagnetic compatibility- Requirements for house hold appliances, electric tools and similar apparatus)
-EN 60204-1:2006 (Safety of machinery – Electrical equipment of machines.)
-CEI EN 60335-1 (Specification for safety of household and similar electrical appliances);
-CEI EN 60335-2-102 (Household and similar electrical appliances. Safety. Particular requirements for gas, oil and solid-fuel burning appliances having electrical connections).
-UNI EN ISO 12100:2010 (Safety of machinery - General principles for design - Risk assessment and risk reduction);

National Standard

-UNI 7824 (Atomizing burners of the monobloc type. Characteristics and test methods)

Heavy oil burners

European Directives

-2014/35/UE (Low Tension Directive)
-2014/30/UE (Electromagnetic compatibility Directive)
-2006/42/EC (Machinery Directive)

Harmonized standards

-UNI EN 267(Automatic forced draught burners for liquid fuels)
-EN 55014-1 (Electromagnetic compatibility- Requirements for house hold appliances, electric tools and similar apparatus)
-EN 60204-1:2006 (Safety of machinery – Electrical equipment of machines.)
-CEI EN 60335-1 (Specification for safety of household and similar electrical appliances);
-CEI EN 60335-2-102 (Household and similar electrical appliances. Safety. Particular requirements for gas, oil and solid-fuel burning appliances having electrical connections).
-UNI EN ISO 12100:2010 (Safety of machinery - General principles for design - Risk assessment and risk reduction);

Norme nazionali / National Standard

-UNI 7824 (Atomizing burners of the monobloc type. Characteristics and test methods.

Gas - Light oil burners

European Directives

-Regulation 2016/426/UE (appliances burning gaseous fuels)
-2014/35/UE (Low Tension Directive)
-2014/30/UE (Electromagnetic compatibility Directive)
-2006/42/EC (Machinery Directive)

Harmonized standards

-UNI EN 676 (Automatic forced draught burners for gaseous fuels)
-UNI EN 267(Automatic forced draught burners for liquid fuels)
-EN 55014-1 (Electromagnetic compatibility- Requirements for house hold appliances, electric tools and similar apparatus)
-EN 60204-1:2006 (Safety of machinery – Electrical equipment of machines.)
-CEI EN 60335-1 (Specification for safety of household and similar electrical appliances);
-CEI EN 60335-2-102 (Household and similar electrical appliances. Safety. Particular requirements for gas, oil and solid-fuel burning appliances having electrical connections).
-UNI EN ISO 12100:2010 (Safety of machinery - General principles for design - Risk assessment and risk reduction);

Norme nazionali / National Standard

-UNI 7824 (Atomizing burners of the monobloc type. Characteristics and test methods.

Gas - Heavy oil burners

European directives:

-Regulation 2016/426/UE (appliances burning gaseous fuels)
-2014/35/UE (Low Tension Directive)
-2014/30/UE (Electromagnetic compatibility Directive)
-2006/42/EC (Machinery Directive)

Harmonized standards

-UNI EN 676 (Automatic forced draught burners for gaseous fuels)
-EN 55014-1 (Electromagnetic compatibility- Requirements for house hold appliances, electric tools and similar apparatus)
-EN 60204-1:2006 (Safety of machinery – Electrical equipment of machines.)
-CEI EN 60335-1 (Specification for safety of household and similar electrical appliances);
-CEI EN 60335-2-102 (Household and similar electrical appliances. Safety. Particular requirements for gas, oil and solid-fuel burning appliances having electrical connections).
-UNI EN ISO 12100:2010 (Safety of machinery - General principles for design - Risk assessment and risk reduction);

National Standard

- UNI 7824 (Atomizing burners of the monobloc type. Characteristics and test methods.

Industrial burners

European directives

-Regulation 2016/426/UE (appliances burning gaseous fuels)
-2014/35/UE (Low Tension Directive)
-2014/30/UE (Electromagnetic compatibility Directive)
-2006/42/EC (Machinery Directive)

Harmonized standards

-EN 55014-1 (Electromagnetic compatibility- Requirements for house hold appliances, electric tools and similar apparatus)
-EN 746-2 (Industrial thermoprocessing equipment - Part 2: Safety requirements for combustion and fuel handling systems)
-UNI EN ISO 12100:2010 (Safety of machinery - General principles for design - Risk assessment and risk reduction);
-EN 60204-1:2006 (Safety of machinery – Electrical equipment of machines.)
-EN 60335-2 (Electrical equipment of non-electric appliances for household and similar purposes. Safety requirements)

Burner data plate

For the following information, please refer to the data plate:

- burner type and burner model: must be reported in any communication with the supplier
- burner ID (serial number): must be reported in any communication with the supplier
- date of production (year and month)
- information about fuel type and network pressure

Type	--
Model	--
Year	--
S.Number	--
Output	--
Oil Flow	--
Fuel	--
Category	--
Gas Pressure	--
Viscosity	--
El.Supply	--
El.Consump.	--
Fan Motor	--
Protection	--
Drwaing n°	--
P.I.N.	--

SYMBOLS USED

WARNING! Failure to observe the warning may result in irreparable damage to the unit or damage to the environment

DANGER! Failure to observe the warning may result in serious injuries or death.

WARNING! Failure to observe the warning may result in electric shock with lethal consequences

Figures, illustrations and images used in this manual may differ in appearance from the actual product.

PART I: INSTALLATION

GENERAL FEATURES

This series represents monobloc gas burners made in die-cast aluminium housing, that can burn either gas or light oil, thanks to the adjustable combustion head which allows a good performance with both fuels.

Fig. 1

1 Gas valve group
2 Blast tube-Combustion head ass.y
3 Burner flange
4 Burner cover

Gas operation: the gas coming from the supply line, passes through the valves group provided with filter and stabiliser. This one forces the pressure in the utilisation limits. **Light oil operation:**the fuel coming from the supply line, is pushed by the pump to the nozzle and then into the combustion chamber, where the mixture between fuel and air takes place and consequently the flame.

In the burners, the mixture bertween fuel and air, to perform clean and efficient combustion, is activated by atomisation of oil into very small particles. This process is achieved making pressurised oil passing through the nozzle.

The pump main function is to transfer oil from the tank to the nozzle in the desired quantity and pressure. To adjust this pressure, pumps are provided with a pressure regulator (except for some models for which a separate regulating valve is provided). Other pumps are provided with two pressure regulators: one for the high and one for low pressure (in double-stage systems with one nozzle).

The adjustable combustion head can improve the burner performance. The combustion head determines the energetic quality and the geometry of the flame. Fuel and comburent are routed into separated ways as far as the zone of flame generation (combustion chamber).

How to interpret the burner "Performance curve"

To check if the burner is suitable for the boiler to which it must be installled, the following parameters are needed:

- furnace input, in kW or kcal/h (kW = kcal/h / 860);
- backpressure (data are available on the boiler's ID plate or in the user's manual).

Example:

Furnace input: 600kW

Backpressure: 4mbar

In the "Performance curve" diagram (Fig. 2), draw a vertical line matching the furnace input value and an horizontal line matching the backpressure value. The burner is suitable if the intersection point A is inside the performance curve.

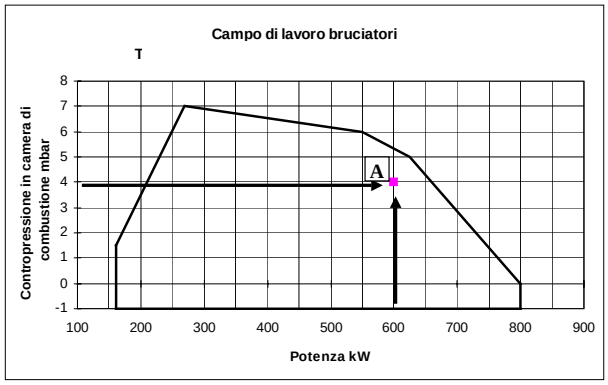

Fig. 2

Data are referred to standard conditions: atmospheric pressure at 1013mbar, ambient temperature at 15°C

Checking the proper gas train size

To check the proper gas train size, it is necessary to know the available gas pressure value upstream the burner's gas valve. Then subtract the backpressure. The result is called **p_{gas}.** Draw a vertical line matching the furnace input value (600kW, in the example), quoted on the x-axis, as far as intercepitng the network pressure curve, according to the installed gas train (DN65, in the example). From the interception point, draw an horizontal line as far as matching, on the y-axis, the value of pressure necessary to get the requested furnace input. This value must be lower or equal to the **p_{gas}** value, calculated before.

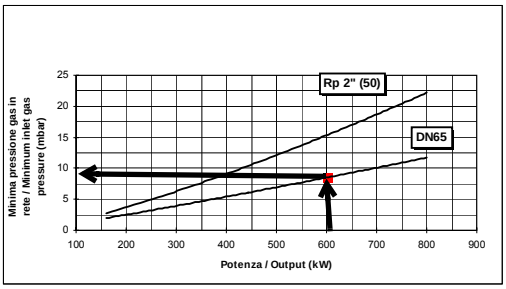

Fig. 3

Matching the burner to the boiler

The burners described in this manual have been tested with combustion chambers that comply with EN676 regulation and whose dimensions are described in the diagram . In case the burner must be coupled with boilers with a combustion chamber smaller in diameter or shorter than those described in the diagram, please contact the supplier, to verify that a correct matching is possible, with respect of the application involved. To correctly match the burner to the boiler verify the necessary input and the pressure in combustion chamber are included in the burner performance curve; otherwise the choice of the burner must be revised consulting the burner manufacturer. To choose the blast tube lenght follow the instructions of the boiler manufacturer. In absence of these consider the following:

- Cast-iron boilers, three pass flue boilers (with the first pass in the rear part): the blast tube must protrude no more than 100 mm into the combustion chamber.
- Pressurised boilers with flame reversal: in this case the blast tube must penetrate at least 50 - 100 mm into combustion chamber in respect to the tube bundle plate.
- The length of the blast tubes does not always allow this requirement to be met, and thus it may be necessary to use a suitably-sized spacer to move the burner backwards or to design a blast tube tha suites the utilisation (please, contact the manifacturer).

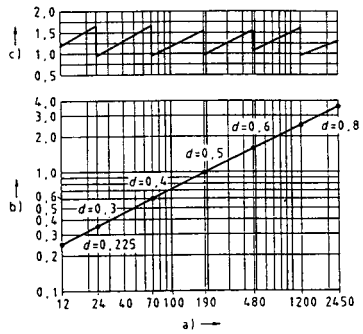

Fig. 4

Key

a) Heat output in kW

b) Lenght of the flame tube in meters

c) Flame tube firing intensity in MW/m^3

d) Combustion chamber diameter (m)

Fig. 4 - Firing intensity, diameter and lenght of the test flame tube as a function of the heat input in kW.

Burner model identification

Burners are identified by burner type and model. Burner model identification is described as follows.

Type **HS18** (1)	Model **MG.** (2) **TN.** (3) **S.** (4) ***.** (5) **A.** (6) **0.** (7) **25** (8)
(1) BURNER TYPE	**HS5 - HS10 - HS18**
(2) FUEL	M - Natural gas G - Light oil
(3) OPERATION (Available versions)	TN - Single stage
(4) BLAST TUBEBLAST TUBE	S - Standard L - Extended
(5) DESTINATION COUNTRY	* - see data plate
(6) BURNER VERSIONBURNER VERSION	A - Standard
(7) EQUIPMENTEQUIPMENT	0 = 2 gas valves 1 = 2 gas valves + gas proving system 7 = 2 gas valves + high gas pressure switch 8 = 2 gas valves + high gas pressure switch + gas proving system
(8) GAS CONNECTION	15= Rp1/2 20=Rp3/4 25= Rp1

Specifications

BURNER TYPE		HS5	HS10	HS18
Output	min. - max. kW	35 - 70	65 - 140	80 - 200
Fuel		Natural gas - Light oil		
Gas category		(see next paragraph)		
Gas rate	min. - max. Stm³/h)	3.7 - 7.4	7 - 14.8	8.5 - 21.2
Gas pressure	min.- max. mbar	(see Note 2)		
Light oil rate	min.- max. kg/h	3 - 6	5.5 - 11.8	6.7 - 17
Oil viscosity		1.3 °E @ 20°C		
Power supply		230V 1N ~ 50Hz		
Total power consumption	kW	0.35	0.50	0.50
Electric motor	kW	0.10	0.15	0.15
Pump motor	kW	0.10	0.10	0.10
Protection		IP40		
Operation		Single-stage		
Gas Train	Valves size / Gas connection	1/2” / Rp1/2	3/4” / Rp3/4	1” / Rp1
Approx. weight	kg	20	27	27
Operating temperature	°C	-10 ÷ +50		
Storage Temperature	°C	-20 ÷ +60		
Working service*		Internittent		

*** NOTE ON THE WORKING SERVICE: the control box automatically stops after 24h of continuous working. The control box immediately starts up, automatically.**

Note1:	**All gas flow rates are referred to Stm³/h (1013 mbar absolute pressure, 15 °C temperature) and are valid for G20 gas (net calorific value H_i = 34.02 MJ/Stm³).**
Note2:	**Maximum gas pressure = 360mbar (with Dungs MBDLE valves)** **Minimum gas pressure = see gas curves.**

Country and usefulness gas categories

GAS CATEGORY	COUNTRY																								
I_{2H}	AT	ES	GR	SE	FI	IE	HU	IS	NO	CZ	DK	GB	IT	PT	CY	EE	LV	SI	MT	SK	BG	LT	RO	TR	CH
I_{2E}	LU	PL	-	-	-	-	-	-	-	-	-	-	-	-	-	-	-	-	-	-	-	-	-	-	-
$I_{2E(R)B}$	BE	-	-	-	-	-	-	-	-	-	-	-	-	-	-	-	-	-	-	-	-	-	-	-	-
I_{2L}	NL	-	-	-	-	-	-	-	-	-	-	-	-	-	-	-	-	-	-	-	-	-	-	-	-
I_{2ELL}	DE	-	-	-	-	-	-	-	-	-	-	-	-	-	-	-	-	-	-	-	-	-	-	-	-
I_{2Er}	FR	-	-	-	-	-	-	-	-	-	-	-	-	-	-	-	-	-	-	-	-	-	-	-	-

Overall dimensions (mm)

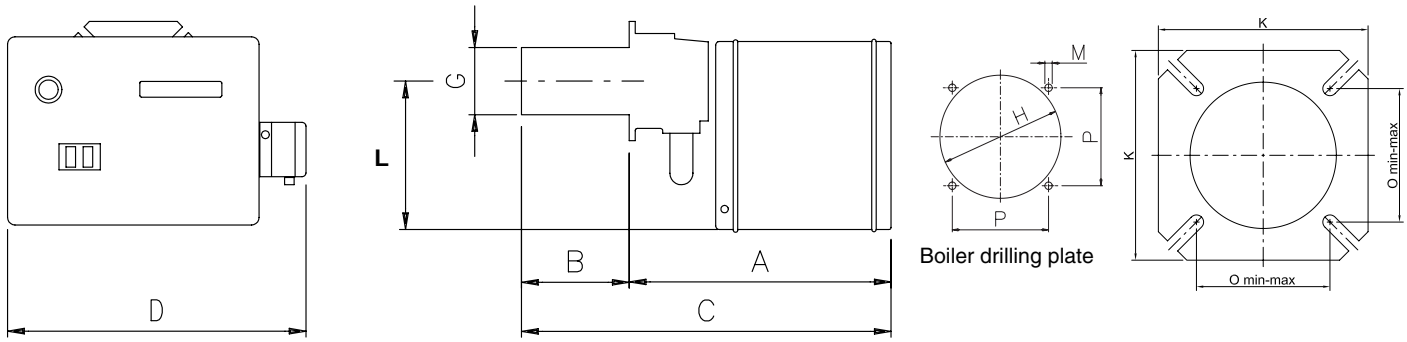

	A	Bmin	Bmax	Cmin	Cmax	D	E	G	H	K	L	M	Omin	Omax	P
HS5 (S)	320	0	61	320	381	400	230	80	98	162	190	M8	86	138	112
HS5 (L)	320	0	160	320	480	400	230	80	98	162	190	M8	86	138	112
HS10 (S)	350	159	159	509	509	430	255	108	133	162	210	M8	103	130	120
HS10 (L)	350	254	254	604	604	430	255	108	133	162	210	M8	103	130	120
HS18 (S)	350	177	177	527	527	430	255	126	133	162	210	M8	103	130	120
HS18 (L)	350	267	267	617	617	430	255	126	133	162	210	M8	103	130	120

Performance Curves

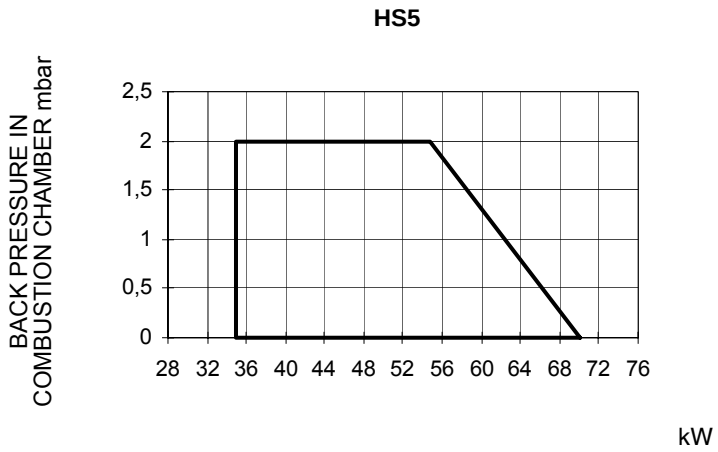

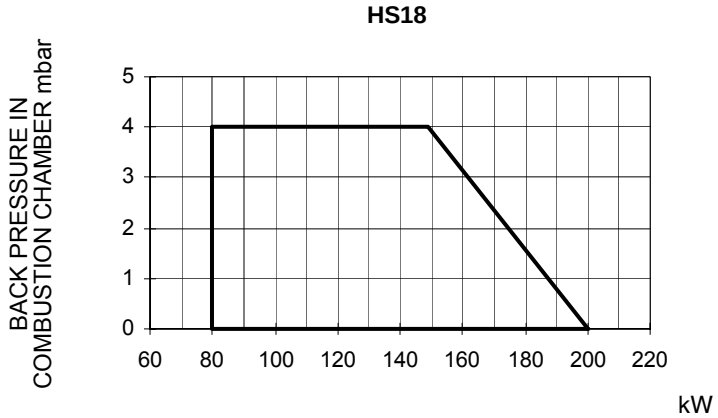

To get the input in kcal/h, multiply value in kW by 860.

Data are referred to standard conditions: atmospheric pressure at 1013mbar, ambient temperature at 15°C

Pressure in the network - gas rate curves

HS5

HS10

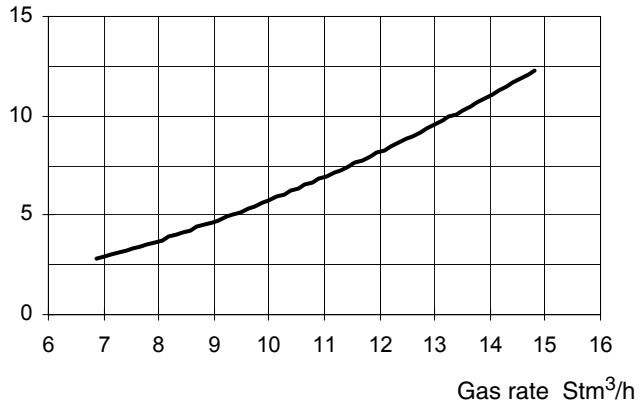

HS18

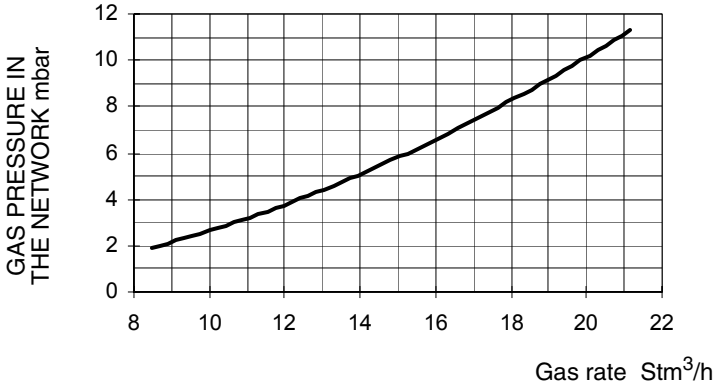

MOUNTINGS AND CONNECTIONS

Packing

Burners are despatched in cardboard packages whose dimensions are (mm):
HS5: 570mm x 460mm x 335mm
HS10 - HS18: 705mm x 500mm x 340mm

Packing cases of this kind are affected by humidity and are not suitable for stacking. The following are placed in each packing case:

1 burner with gas train detached;
1 gasket to be inserted between the burner and the boiler;
2 flexible oil pipes;
1 oil filter;
1 envelope containing this manual

To get rid of the burner's packing, follow the procedures laid down by current laws on disposal of materials

Fitting the burner to the boiler

To install the burner into the boiler, proceed as follows:

1 on the boiler's door hole, fix the 4 stud bolts according to the drilling template showed on paragraph "Overall dimensions"
2 fix the flange of the burner to the boiler;
3 install the burner into the boiler;
4 according to the reference showed on Fig. 3, fix the flange to the boiler's stud bolts **D**, without completely fastening;
5 loosen the **VS** screws in order to let the blast tube move back and forth;
6 install the burner making the blast tube move into the flange as to reach the right position according to the boiler/utilisation
7 fasten the **VS** screws:
8 tighten the 4 stud blolts **D** completely;
9 seal the space between the blast tube and the refractory lining with appropriate insulating material (ceramic fibre cord or refractory cement).

Gas train connections

The next diagrams show the components of the gas train included in the delivery and which must be fitted by the installer.The diagrams are in compliance with the current laws.

⚠	**ATTENTION:** BEFORE EXECUTING THE CONNECTIONS TO THE GAS PIPE NETWORK, BE SURE THAT THE MANUAL CUTOFF VALVES ARE CLOSED. READ CAREFULLY THE “WARNINGS” CHAPTER AT THE BEGINNING OF THIS MANUAL.

Gas train - 1 Gas train with valves group MB-DLE with built-in gas pressure governor + VPS504 gas proving system

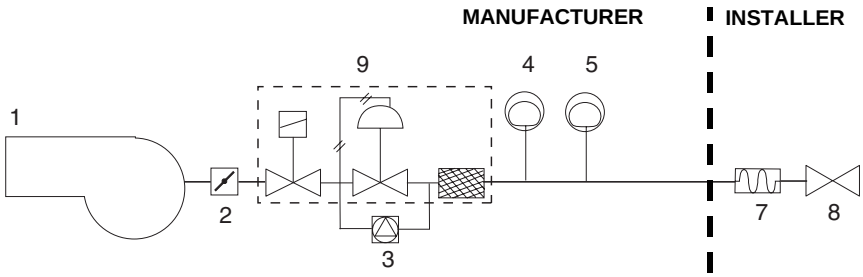

Key

1 Burner
2 Butterfly valve
3 Gas proving system (option)
4 Maximum gas pressure switch (option)
5 Minimum gas pressure switch
6 Gas filter
7 Bellow joint
8 Manual cutoff valve
9 MB-DLE Valves group

Assembling the gas grain

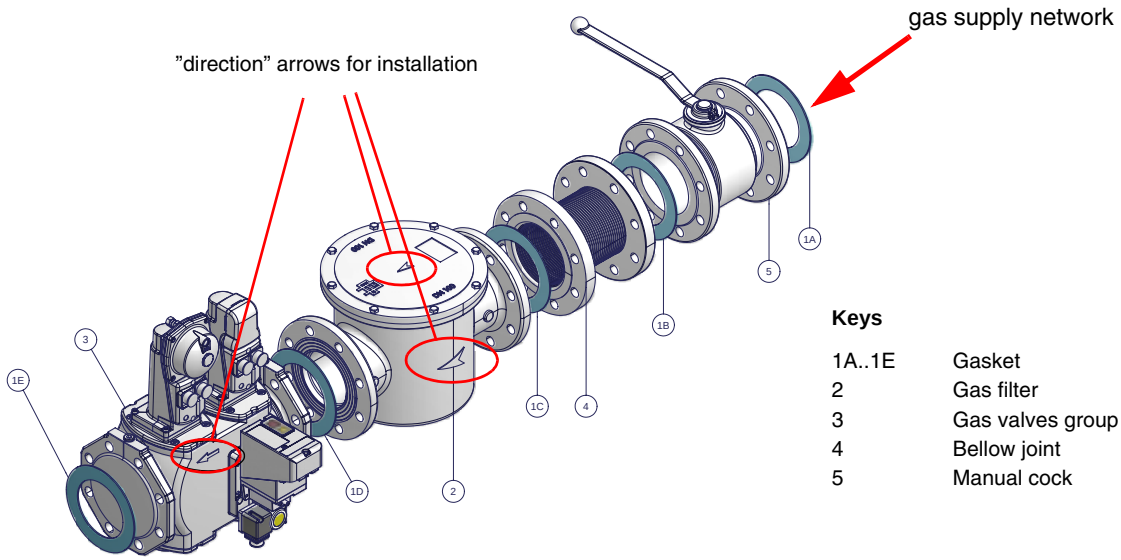

Keys

1A..1E	Gasket
2	Gas filter
3	Gas valves group
4	Bellow joint
5	Manual cock

Fig. 5 - Example of gas train

To mount the gas train, proceed as follows:

1-a) in case of threaded joints: use proper seals according to the gas used;

2) fix all the elements by means of screws, according to the schemes shown, observing the mounting direction for each element.

NOTE: the bellow joint, the manual valve and the gaskets are not part of the standard supply.

⚠	**ATTENTION:** once the gas train is mounted according to the diagram on Fig. 5, the gas proving test mus be performed, according to the procedure set by the laws in force.

The procedure of installation of the gas valves is showed in the next paragraph:

- threaded gas trains with Multibloc Dungs MB-DLE

MULTIBLOC DUNGS MB-DLE 405..412

Mounting

1. Mount flange onto tube lines: use appropriate sealing agent (see Fig. 8);
2. insert MB-DLE: note position of O rings (see Fig. 8);
3. tighten screws A, B, C and D (Fig. 6 - Fig. 7), accordind to the mounting positions (Fig. 9);
4. after installation, perform leakage and functional test;
5. disassembly in reverse order.

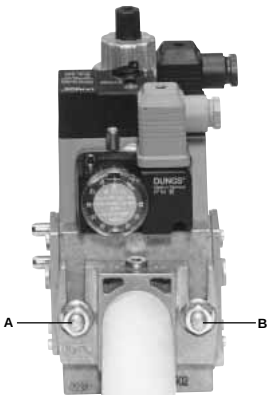

Fig. 6

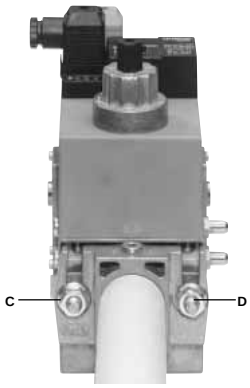

Fig. 7

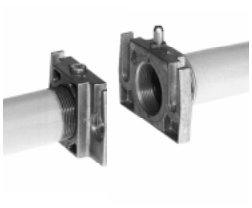

Fig. 8

MOUNTING POSITIONS

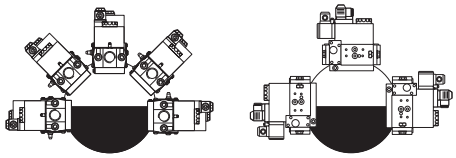

Fig. 9

Once the train is installed, connect electrically all its elements: gas valves group, pressure switches, gas proving system (option).

⚠	**ATTENTION:** once the gas train is mounted according to the diagram on Fig. 5, the gas proving test mus be performed, according to the procedure set by the laws in force.

Hydraulic diagrams for light oil supplying circuits

Fig. 10 - Gravity circuit

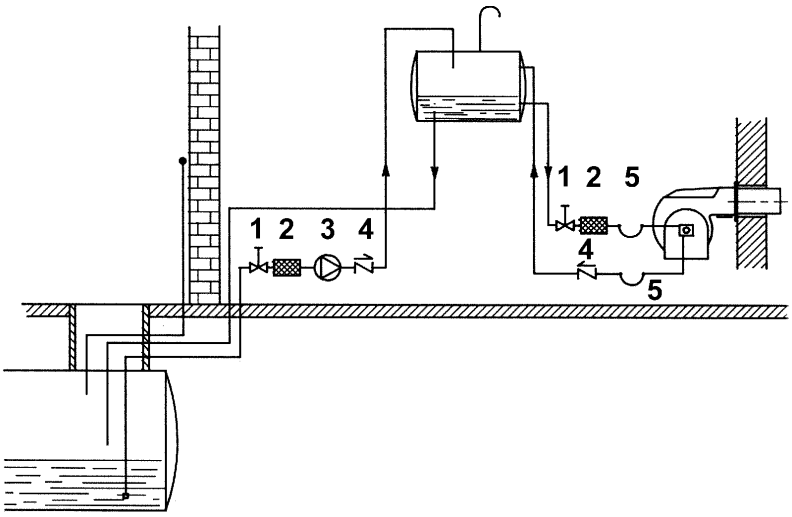

Fig. 11 - Ring circuit

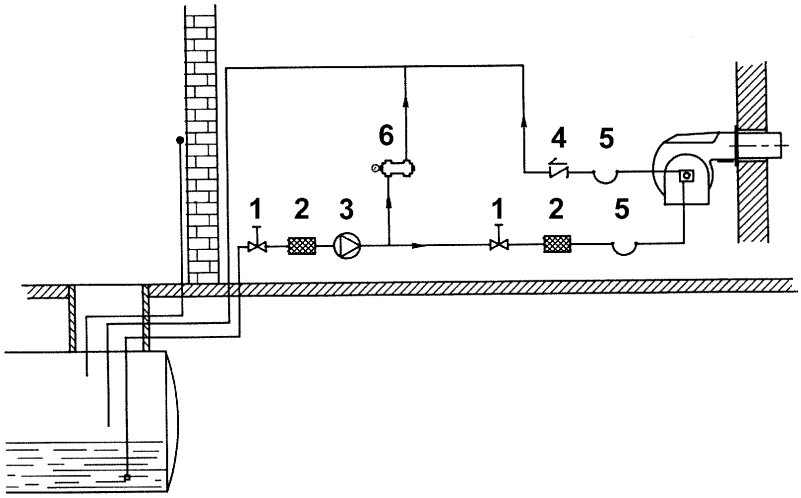

Fig. 12 - Suction circuit

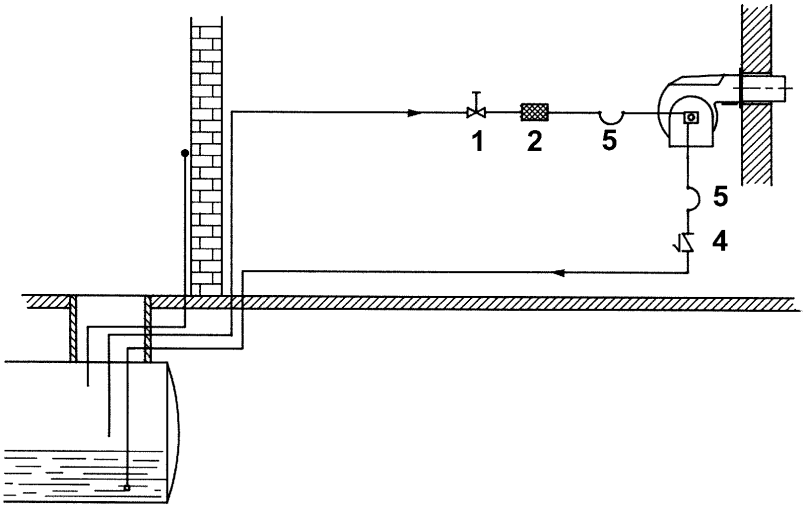

Key

1 Manual valve
2 Light oil filter
3 Light oil feeding pump
4 One way valve
5 Flexible hoses
6 Relief valve

NOTE: in plants where gravity or ring feed systems are provided, install an automatic interception device (see n. 4).

Light oil piping installation diagram

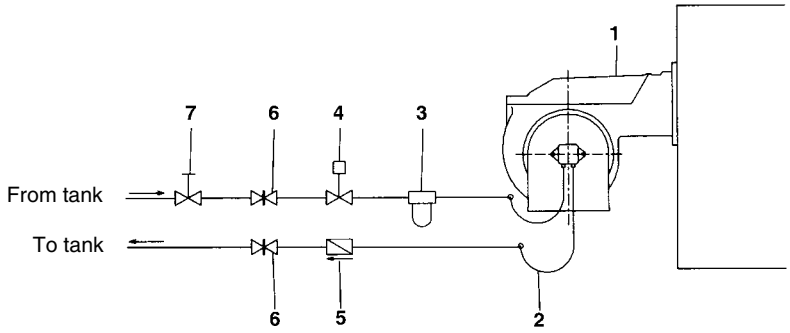

Fig. 13

Key

1 Burner
2 Flexible hoses (fitted)
3 Light oil filter (fitted)
4 Automatic interceptor (*)
5 One-way valve (*)
6 Gate valve
7 Quick-closing gate-valve (not in vicinity of tank or boiler)

(*) Only for installations with gravity, siphon or forced circulation feed systems. If the device installed is a solenoid valve, a timer must be installed to delay the valve closing.
The direct connection of the device without a timer may cause pump breaks.

The pumps that are used can be installed both into single-pipe and double-pipe systems.

Single-pipe system: a single pipe drives the oil from the tank to the pump's inlet. Then, from the pump, the pressurised oil is driven to the nozzle: a part comes out from the nozzle while the othe part goes back to the pump. In this system, the by-pass plug, if provided, must be removed and the optional return port, on the pump's body, must be sealed by steel plug and washer.

Double-pipe system: as for the single pipe system, a pipe that connects the tank to the pump's inlet is used besides another pipe that connects the pump's return port to the tank, as well. The excess of oil goes back to the tank: this installation can be considered self-bleeding. If provided, the inside by-pass plug must be installed to avoid air and fuel passing through the pump.

Burners come out from the factory provided for double-pipe systems. They can be suited for single-pipe system (recommended in the case of gravity feed) as decribed before.To change from a 1-pipe system to a 2-pipe-system, insert the by-pass plug **G** (as for ccw-rotation- referring to the pump shaft).

Caution: Changing the direction of rotation, all connections on top and side are reversed.

Bleed

Bleeding in two-pipe operation is automatic : it is assured by a bleed flat on the piston. In one-pipe operation, the plug of a pressure gauge port must be loosened until the air is evacuated from the system.

Sizing the light oil pipeline

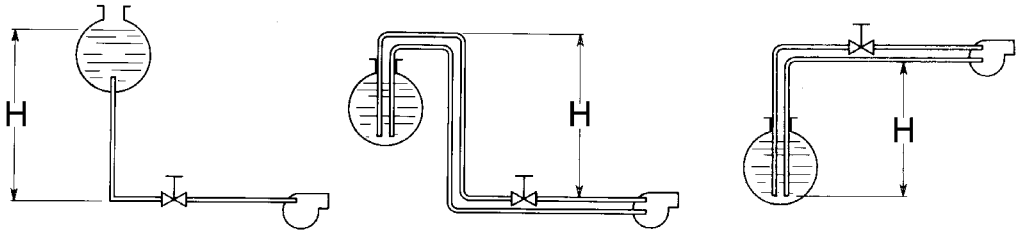

Fig. 14

Tab. 1

H (m)	L (m)		
	Ø 6	Ø 8	Ø 10
0	41	100	100
0.5	70	100	100
1	100	100	100
1.5	100	100	100
2	100	100	100
2.5	100	100	100
3	100	100	100
3.5	100	100	100
4	100	100	100
4.5	100	100	100
5	100	100	100

Tab. 2

H (m)	L (m)			
	Ø 6	Ø 8	Ø 10	Ø 12
0	19	77	100	100
1	24	90	100	100
2	30	100	100	100
3	34	100	100	100
4	39	100	100	100
5	44	100	100	100
6	48	100	100	100
7	52	100	100	100
8	56	100	100	100
9	55	100	100	100
10	51	100	100	100

Tab. 3

H (m)	L (m)			
	Ø 6	Ø 8	Ø 10	Ø 12
0	18	73	100	100
0.5	15	66	100	100
1	13	59	100	100
1.5	10	52	100	100
2	7	44	100	100
2.5	5	44	100	100
2.5	-	37	100	100
3	-	30	85	100
3.5	-	23	68	100
4	-	-	-	100
4.5	-	-	-	-

About the use of fuel pumps

- Make sure that the by-pass plug is not used in a single pipe installation, because the fuel unit will not function properly and damage to the pump and burner motor could result.
- Do not use fuel with additives to avoid the possible formation over time of compounds which may deposit between the gear teeth, thus obstructing them.
- After filling the tank, wait before starting the burner. This will give any suspended impurities time to deposit on the bottom of the tank, thus avoiding the possibility that they might be sucked into the pump.
- On initial commissioning a "dry" operation is foreseen for a considerable length of time (for example, when there is a long suction line to bleed). To avoid damages inject some lubrication oil into the vacuum inlet.
- Care must be taken when installing the pump not to force the pump shaft along its axis or laterally to avoid excessive wear on the joint, noise and overloading the gears.
- Pipes should not contain air pockets. Rapid attachment joint should therefore be avoided and threaded or mechanical seal junctions preferred. Junction threads, elbow joints and couplings should be sealed with removable sg component. The number of junctions should be kept to a minimum as they are a possible source of leakage.
- Do not use PTFE tape on the suction and return line pipes to avoid the possibility that particles enter circulation. These could deposit on the pump filter or the nozzle, reducing efficiency. Always use O-Rings or mechanical seal (copper or aluminium gaskets) junctions if possible.
- An external filter should always be installed in the suction line upstream of the fuel unit.

Light oil pumps

Pump Suntec AS47 A

Viscosity	2 ÷ 12 mm²/s (cSt)
Fuel temperature	0 ÷ 60 °C
Maximum inlet pressure	2 bar
Minimum inlet pressure	- 0,45 bar to avoid gasing
Maximum Return pressure	2 bar
Maximum speed	3600 rpm

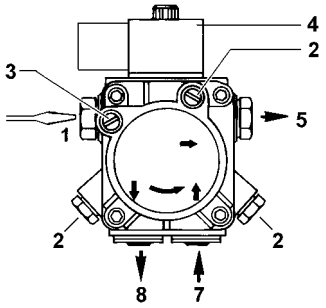

Suntec AT245A

Viscosity	2 ÷ 12 cSt
Oil temperature	60 °C max
Inlet maximum pressure	2 bar
Return maximum pressure	2 bar
Inlet minimum pressure	- 0.45 bar to avoid gasing
Rated speed	3600 rpm max.

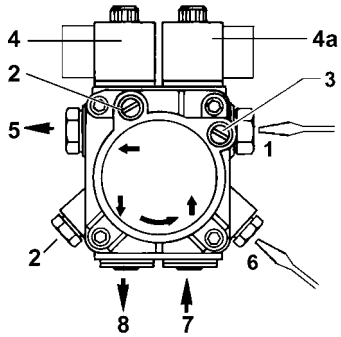

Key (Suntec AS47)

1 Pressure governor
2 Pressure gauge port G1/8
3 Vacuum gauge port G1/8
4 Solenoid valve
5 Delivery to nozzle G1/8
7 Inlet G1/4
8 Return G1/4

Key (Suntec AT2 45A)

1 Low pressure regulation (first stage)
2 Pressure gauge port G1/8
3 Vacuum gauge port G1/8
4 Light oil solenoid valve
4a High-low pressure solenoid valve
5 Delivery to nozzle G1/8
6 High pressure regulation (second stage)
7 Inlet G1/4
8 Return (with internal by-pass plug) G1/4

Connecting the light oil flexible hoses

To connect the flexible light oil hoses to the pump, proceed as follows, according to the pump provided:

1 remove the closing nuts **A** and **R** on the inlet and return connections of the pump;

2 screw the rotating nut of the two flexible hoses on the pump **being careful to avoid exchanging the inlet and return lines**: see the arrows marked on the pump that show the inlet and the return (see prevoius paragraph).

Suntec AS47 A	Suntec AT2 45
A R	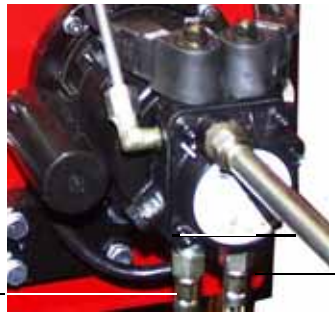 R A

Electrical connections

⚠	**Respect the basic safety rules. make sure of the connection to the earthing system. do not reverse the phase and neutral connections. fit a differential thermal magnet switch adequate for connection to the mains.**
	ATTENTION: before executing the electrical connections, pay attention to turn the plant's switch to OFF and be sure that the burner's main switch is in 0 position (OFF) too. Read carefully the chapter "WARNINGS", and the "Electrical connections" section.

⚠	**IMPORTANT: while connecting electric supply wires to burner's teminal block be sure that ground wire should be longer than phase and neutral ones.**

⚠	**the cable that connects the thermostats and the control box must not be longer than 3 meters.**

To execute the electrical connections, proceed as follows:

1 remove the cover from the electrical board, unscrewing the fixing screws;
2 execute the electrical connections to the supply terminal board as shown in the following diagrams,
3 check the direction of the motor (see next paragraph)
4 refit the panel cover

As far as connections refer to the terminal block, shown below:

1 Connect the signal conductors from the boiler to the burner, as for the next elements (see pictures):
   ST: thermostat/pressure switch series
   TS: Boiler Safety thermostats\pressure switches
2 Connect the signal conductors from the burner to the boiler, as for the next elements (see pictures)
   LB: Burner's lockout signalling LED
   LF: Burner operation signalling LED

Keys

IL Mains switch
LB Burner lockout signalling lamp
LF Burner operation signalling lamp
MA Burner power supply terminal board
ST Thermostats or pressure switches serie
TS Boiler safety thermostat/pressure switch

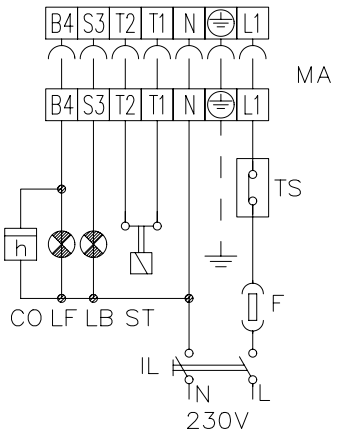

Fig. 15

Rotation of fan motor and pump motor

Once the electrical connection of the burner is executed, remember to check the rotation of the motor. The motor should rotate according to the indication on the body. In the event of wrong rotation, reverse the three-phase supply and check again the rotation of the motor.

ADJUSTMENTS

⚠	***ATTENTION:*** **before starting the burner up, be sure that the manual cutoff valves are open and check that the pressure upstream the gas train complies the value quoted on paragraph "Technical specifications". Be sure that the mains switch is closed.**
	.***ATTENTION:*** During commissioning operations, do not let the burner operate with insufficient air flow (danger of formation of carbon monoxide); if this should happen, make the gas decrease slowly until the normal combustion values are achieved.
	WARNING: NEVER LOOSE THE SEALED SCREWS! OTHERWISE, THE DEVICE WARRANTY WILL BE IMMEDIATELY INVALIDATE!

⚠	**IMPORTANT! the combustion air excess must be adjusted according to the in the following chart:**

Recommended combustion parameters		
Fuel	Recommended (%) CO_2	Recommended (%) O_2
Natural gas	9 ÷ 10	3 ÷ 4.8
Light oil	11.5 ÷ 13	2.9 ÷ 4.9

Combustion head gas pressure curves depending on the flow rate

Curves are referred to pressure= 0mbar in the combustion head!

The curves referred to the gas pressure in the combustion head, depending on the gas flow rate, are referred to the burner properly adjusted (percentage of residual O_2 in the flues as showed in the "Recommended combustion values" table and CO in the standard limits). During this stage, the combustion head, the gas butterfly valve and the servocontrol are at the maximum opening. Refer to Fig. 16, showing the correct way to measure the gas pressure, considering the values of pressure in combustion chamber, surveyed by means of the pressure gauge or taken from the boiler's Technical specifications.

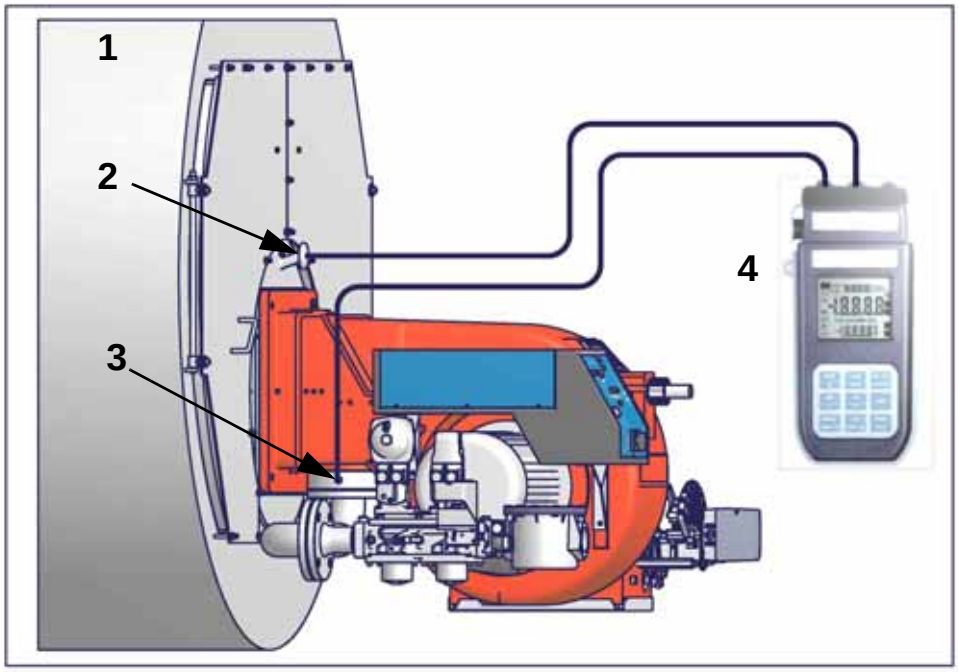

Fig. 16

Key

1 Boiler
2 Pressure outlet on the combustion chamber
3 Gas pressure outlet on the butterfly valve
4 Differential pressure gauge

Measuring the gas pressure in the combustion head

In order to measure the pressure in the combustion head, insert the pressure gauge probes: one into the combustion chamber's pressure outlet (Fig. 16-2) to get the pressure in the combustion chamber and the other one into the butterfly valve's pressure outlet of the burner (Fig. 16-3). On the basis of the measured differential pressure, it is possible to get the maximum flow rate: in the pressure - rate

curves (showed on the next paragraph), it is easy to find out the burner's output in Stm3/h (quoted on the x axis) from the pressure measured in the combustion head (quoted on the y axis). The data obtained must be considered when adjusting the gas flow rate.

NOTE: THE PRESSURE-RATE CURVES ARE GIVEN AS INFORMATION ONLY; FOR A PROPER SETTING OF THE GAS RATE, PLEASE REFER TO THE GAS METER READING.

Pressure in combustion head - gas rate curves

HS5

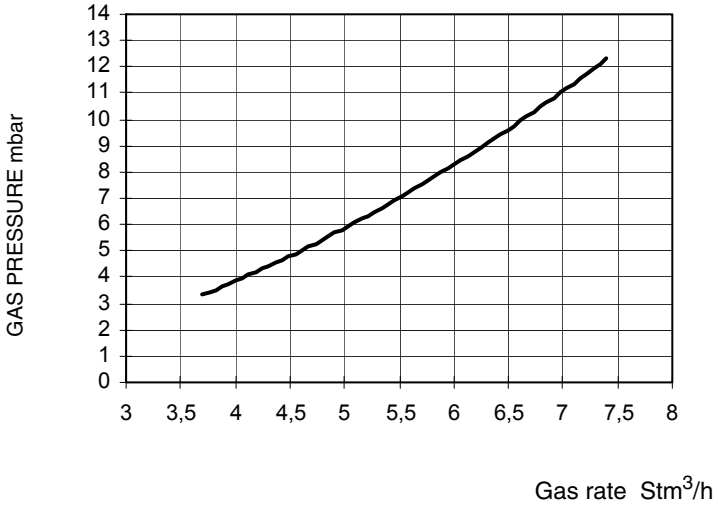

HS10

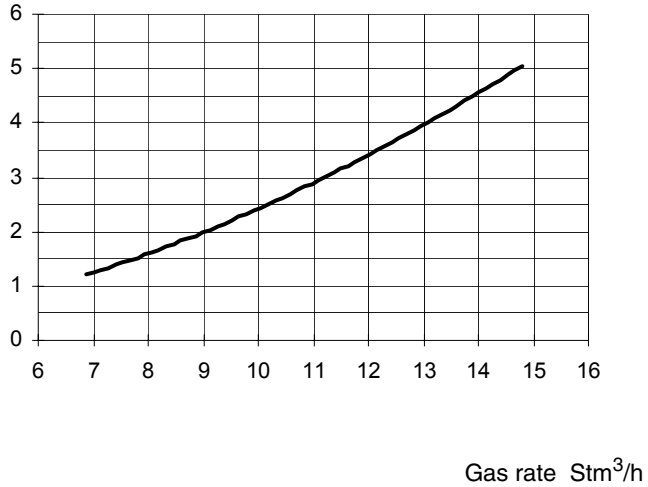

HS18

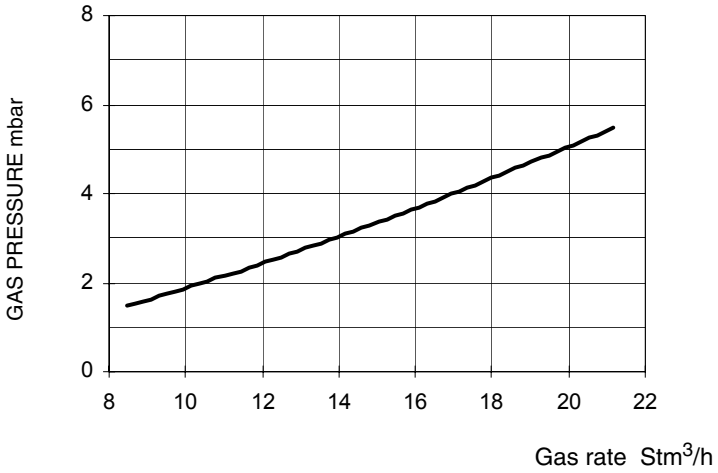

VPS504 Gas proving system

The VPS504 check the operation of the seal of the gas shut off valves. This check is carried out as soon as the boiler thermostat gives a start signal to the burner, creating, by means of the diaphragm pump inside it, a pressure in the test space of 20 mbar higher than the supply pressure.

When wishing to monitor the test, install a pressure gauge ranged to that of the pressure supply point PA.

If the test cycle is satisfactory, after a few seconds the consent light LC (yellow) comes on. In the opposite case the lockout light LB (red) comes on.

To restart it is necessary to reset the appliance by pressing the illuminated pushbutton LB.

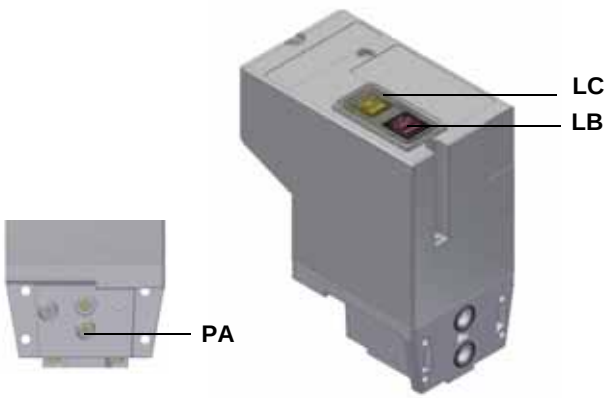

Fig. 17

Adjustments - brief description

- Check that the combustion parameters are in the suggested limits.
- Check the flow rate measuring it on the counter or, if it was not possible, verifying the combustion head pressure by means of a differential pressure gauge, as described on par. “Measuring the gas pressure in the combustion head” on page 18.
- Adjust the combustion values in the high-flame stage.

Start with the adjustment in the light oil operation and then proceed with the gas flow rate adjustment.

Adjustment procedure for light oil operation

The light oil flow rate is set by choosing a nozzle that suits the boiler/utilisation output and setting the delivery and return pressure values according to the ones quoted on the table below (as far as reading the pressure values, see next paragraphs).

Keys

EV1 Light oil solenoid valve
EV2 Light oil solenoid valve
M Pressure gauge
P Pump

Fig. 18
HS5 - HS10

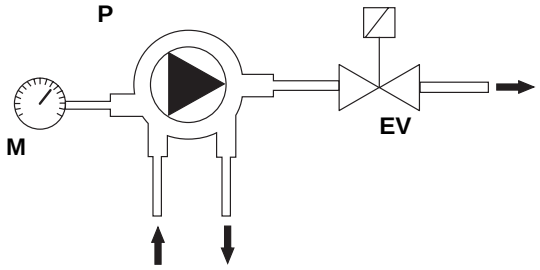

Pump pressure

HS5 - HS10
12 bar

HS18
First stage, 8bar
second stage, 18bar

Fig. 19
HS18

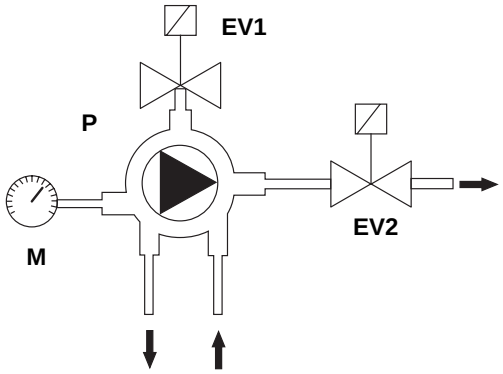

Choice of the oil nozzle

nozzle Size	PUMP PRESSURE bar										
	8	9	10	11	12	13	14	15	16	17	18
GPH	Flow rate kg/h										
0.40	1.36	1.44	1.52	1.59	1.66	1.73	1.80	1.86	1.92	1.98	2.04
0.50	1.70	1.80	1.90	1.99	2.08	2.17	2.25	2.33	2.40	2.48	2.55
0.60	2.04	2.16	2.28	2.39	2.50	2.60	2.70	2.79	2.88	2.97	3.06
0.65	2.21	2.34	2.47	2.59	2.70	2.82	2.92	3.02	3.12	3.22	3.31
0.75	2.55	2.70	2.85	2.99	3.12	3.25	3.37	3.49	3.60	3.71	3.82
0.85	2.89	3.06	3.23	3.39	3.54	3.68	3.82	3.95	4.08	4.21	4.33
1.00	3.40	3.60	3.80	3.98	4.16	4.33	4.49	4.65	4.80	4.95	5.10
1.10	3.74	3.96	4.18	4.38	4.58	4.76	4.94	5.12	5.29	5.45	5.61
1.20	4.08	4.32	4.56	4.78	4.99	5.20	5.39	5.58	5.77	5.94	6.12
1.25	4.25	4.50	4.75	4.98	5.20	5.41	5.62	5.82	6.01	6.19	6.37
1.35	4.59	4.86	5.13	5.38	5.62	5.85	6.07	6.28	6.49	6.69	6.88
1.50	5.10	5.41	5.70	5.98	6.24	6.50	6.74	6.98	7.21	7.43	7.64
1.65	5.61	5.95	6.27	6.57	6.87	7.15	7.42	7.68	7.93	8.17	8.41
1.75	5.95	6.31	6.65	6.97	7.28	7.58	7.87	8.14	8.41	8.67	8.92
2.00	6.80	7.21	7.60	7.97	8.32	8.66	8.99	9.30	9.61	9.91	10.19
2.25	7.64	8.11	8.55	8.96	9.36	9.74	10.11	10.47	10.81	11.14	11.47
2.50	8.49	9.01	9.50	9.96	10.40	10.83	11.24	11.63	12.01	12.38	12.74
3.00	10.19	10.81	11.40	11.95	12.48	12.99	13.48	13.96	14.41	14.86	15.29
3.50	11.89	12.61	13.29	13.94	14.56	15.16	15.73	16.28	16.82	17.33	17.84

Tab. 4

Before performing adjustments, it is necessary to prime the fule pump accroding to the next procedure:

1 remove the burner cover;

2 remove the solenoid valve coil **B** on pump **P** (Fig. 20) to avoid the light oil to get into the combustion chamber;

3 start the burner up by means of the **MS** switch (switch to ON - Fig. 22) and by means of the thermostats\pressure switches series;

4 remove the detection probe **FC** (Fig. 20) and light it up;

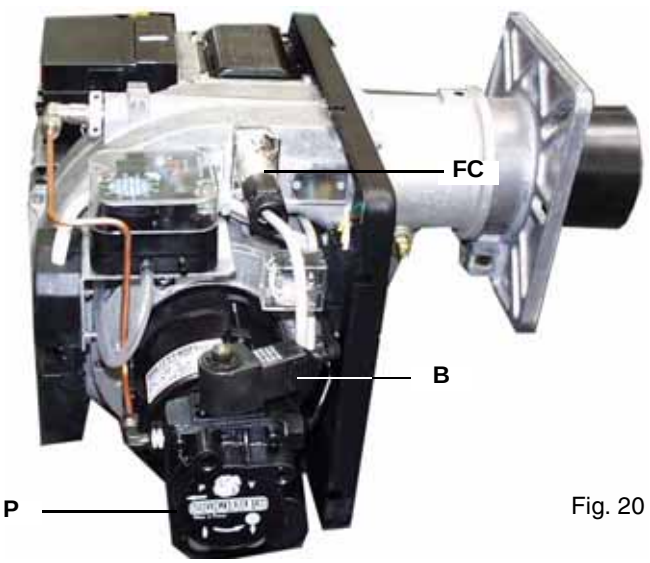

Fig. 20

5 bleed the air from the **M** pressure gauge port of the pump (**P**), slightly loosing the cao and without removing it (Fig. 20);

6 (only for **HS18**) to adjust the output at a lower output, always in the prepuring phase, adjust the pump pressure value by means of the **VR1** screw (see picutre above), according to the low flame rate requested (i.e. 9-10bar); do not set the pressure lower than 8bar;

Caution: The nozzle flow rate at 8bar must be higher than the flow rate referred to the burner minimum output.

7 (only for **HS18**) after the ignition phase, the control box drives the burner to the second stage (flame at steady state): by means of the **VR2** screw, adjust the pump pressure according to the flow rate required (for example 17-18), without exceeding 18bar.

Suntec AS47	Suntec AT2
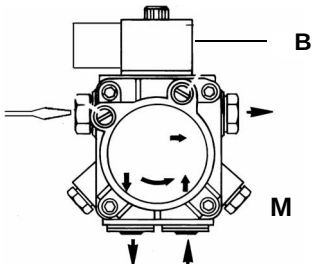	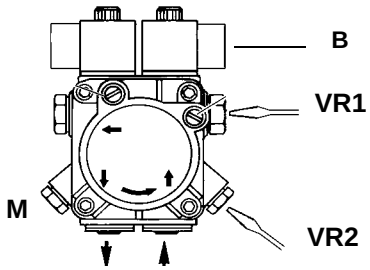

Fig. 21

8 Turn the burner off;

9 replace the detection probe into its slot;

10 reconnect the **B** coil on the pump (Fig. 20);

11 turn the burner on; if it locks out, press the unlock pushbutton (**PS** - Fig. 22) placed in the burner upper side and repeat the procedure.

Fig. 22

12 The oil flow rate depends on the nozzle choosen.

13 Checking the combustion values, adjust the air flow rate acting on the **VSB** screw (Fig. 23); screw to decrease the flow rate and unscrew to increase it.

14 Turn the burner off and go on with the adjustment in the gas operation.

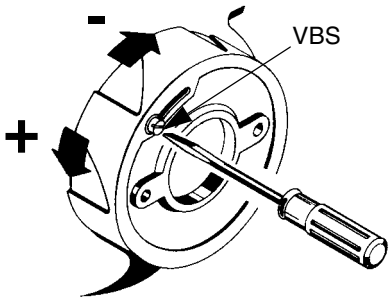

Fig. 23

Adjustment procedure for gas operation

1 Set GAS fuel by means of the burner **CM** switch (it is placed on the burner control panel - see page 24)

Before starting the burner up, set the slow opening. To set the slow opening, remove cover **T**, reverse it upside down and use it as a tool to rotate screw **VR**. Clockwise rotation reduces start flow rate, anticlockwise rotation increases it. Do not use a screwdriver on the screw **VR**! **Note:** the screw **VSB** must be removed only in case of replacemente of the coil.

2 start the burner up by means of the thermostat series;

3 do not change the air flow rate adjustment set in the light oil operaion (see previous paragraph);

4 drive the burner to high flame by means of the **TAB** thermostat;

5 Adjust the gas flow rate according to the boiler/utilisation requested values. The valve is adjusted by means of the **RP** (Fig. 24) governor after slackening the locking screw **VB** (Fig. 24) by a number of turns. By unscrewing the regulator **RP** the valve opens, screwing the valve closes. Then open the gas valve by means of RP and at the same time check the gas quantity at the inlet by closing the gas stabiliser by means of **VS** (see Fig. 24). The pressure stabilizer is adjusted by operating the screw **VS** located under the cover **C**: by screwing down the pressure is increased and by unscrewing it is reduced. The aim is to adjust the gas rate by means of the stabiliser with the valve completely open, in order to grant the necessary gas flow rate and the minimum resistance by the valve (in this way problems due to low gas pressure in the network can be avoided).

Caution! always check the combustion values.

6 .The valve is therefore completely open: for safety reasons it is recommended to choke the gas valve as follows. Insert a pressure gauge into the valves outlet (see pressure port PP - Fig. 24) or into the pressure port in the combustion head (be sure that the butterfly gas valve is completely open): close the gas valve by means of the RP ring nut until the outlet pressure decreases for 1mmH_2O. Then open the valve again for 1/4 turn of RP and fasten VB screw (see Fig. 24). The valve is now choked: if the stabiliser can not control the outlet pressure, the valve is not completely open and it chokes gas.

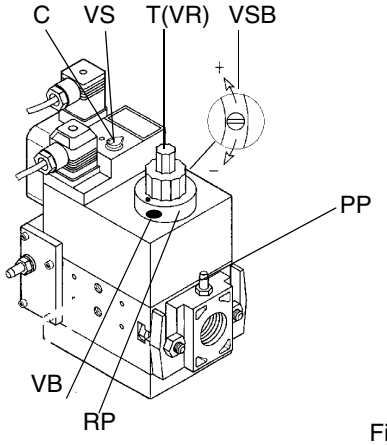

Fig. 24

Dungs Multibloc MB-DLE

7 Now adjust the pressure switches (see page 23).

Adjusting the combsution head

The burner is factory-set with the head in its MAX position (maximum output). To adjust the combustion head turn the ring nut VR. Rotate clockwise to close the combustion head or turn counterclockwise to open it. .

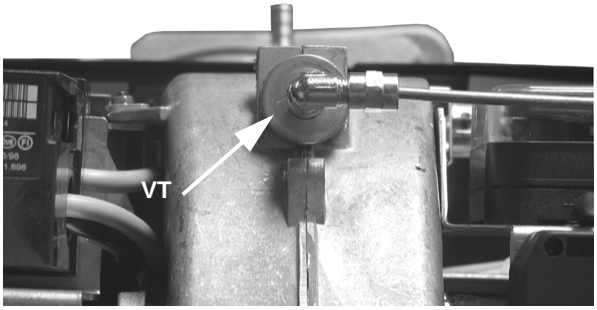

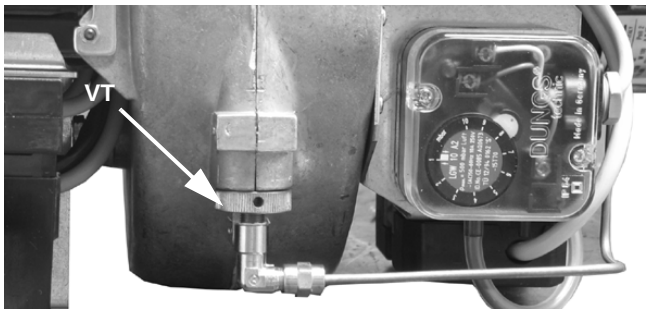

Attention! change the head position only if necessary. If it is necessary to change the head position, repeat the air and gas adjustments as described above.

Calibration of air and gas pressure switches

The **air pressure switch** locks the control box if the air pressure is not the one requested. If it happens, unlock the burner by means of the control box unlock pushbutton, placed on the burner control panel.

The **gas pressure switches** check the pressure to avoid the burner operate when the pressure value is not in the requested pressure range.

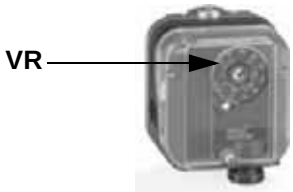

Calibration of air pressure switch

To calibrate the air pressure switch, proceed as follows:

- Remove the transparent plastic cap.
- Once air and fuel setting have been accomplished, startup the burner.
- During the pre-purge phase o the operation, turn slowly the adjusting ring nut **VR** in the clockwise direction (to increase the adjusting pressure) until the burner lockout, then read the value on the pressure switch scale and set it to a value reduced by 15%.
- Repeat the ignition cycle of the burner and check it runs properly.
- Refit the transparent plastic cover on the pressure switch.

Calibration of minimum gas pressure switch

As for the gas pressure switch calibration, proceed as follows:

- Be sure that the filter is clean.
- Remove the transparent plastic cap.
- While the burner is operating at the maximum output, test the gas pressure on the pressure port of the minimum gas pressure switch.
- Slowly close the manual cutoff valve (placed upstream the pressure switch, see gas train installation diagram), until the detected pressure is reduced by 50%. Pay attention that the CO value in the flue gas does not increase: if the CO values are higher than the limits laid down by law, slowly open the cutoff valve as to get values lower than these limits.
- Check that the burner is operating correctly.
- Clockwise turn the pressure switch adjusting ring nut (as to increase the pressure value) until the burner stops.
- Slowly fully open the manual cutoff valve.
- Refit the transparent plastic cover on the pressure switch.

PART II: OPERATION

LIMITATIONS OF USE

THE BURNER IS AN APPLIANCE DESIGNED AND CONSTRUCTED TO OPERATE ONLY AFTER BEING CORRECTLY CONNECTED TO A HEAT GENERATOR (E.G. BOILER, HOT AIR GENERATOR, FURNACE, ETC.), ANY OTHER USE IS TO BE CONSIDERED IMPROPER AND THEREFORE DANGEROUS.

THE USER MUST GUARANTEE THE CORRECT FITTING OF THE APPLIANCE, ENTRUSTING THE INSTALLATION OF IT TO QUALIFIED PERSONNEL AND HAVING THE FIRST COMMISSIONING OF IT CARRIED OUT BY A SERVICE CENTRE AUTHORISED BY THE COMPANY MANUFACTURING THE BURNER.

A FUNDAMENTAL FACTOR IN THIS RESPECT IS THE ELECTRICAL CONNECTION TO THE GENERATOR'S CONTROL AND SAFETY UNITS (CONTROL THERMOSTAT, SAFETY, ETC.) WHICH GUARANTEES CORRECT AND SAFE FUNCTIONING OF THE BURNER.

THEREFORE, ANY OPERATION OF THE APPLIANCE MUST BE PREVENTED WHICH DEPARTS FROM THE INSTALLATION OPERATIONS OR WHICH HAPPENS AFTER TOTAL OR PARTIAL TAMPERING WITH THESE (E.G. DISCONNECTION, EVEN PARTIAL, OF THE ELECTRICAL LEADS, OPENING THE GENERATOR DOOR, DISMANTLING OF PART OF THE BURNER).

NEVER OPEN OR DISMANTLE ANY COMPONENT OF THE MACHINE.

OPERATE ONLY THE MAIN SWITCH, WHICH THROUGH ITS EASY ACCESSIBILITY AND RAPIDITY OF OPERATION ALSO FUNCTIONS AS AN EMERGENCY SWITCH, AND ON THE RESET BUTTON.

IN THE EVENT OF REPEATED LOCKOUTS, DO NOT PERSIST WITH THE RESET BUTTON AND CONTACT QUALIFIED PERSONNEL WHO WILL PROCEED TO ELIMINATE THE MALFUNCTION.

WARNING: DURING NORMAL OPERATION THE PARTS OF THE BURNER NEAREST TO THE GENERATOR (COUPLING FLANGE) CAN BECOME VERY HOT, AVOID TOUCHING THEM SO AS NOT TO GET BURNT.

OPERATION

⚠	***ATTENTION:*** **before starting the burner up, be sure that the manual cutoff valves are open and check that the pressure upstream the gas train complies the value quoted on paragraph "Technical specifications".**

- Choose the fuel by the related switch (B in Fig. 25), placed on the burner cover.
- Turn on the power supply by the main switch (A in Fig. 25).
- Check the control box is not locked, eventually release it by means of the pushbutton placed under the hole on the burner cover.
- Check the series of thermostats (or pressure switches) enable the burner to operate.
- The start cycle of the burner begins, the control box starts the burner fan and meanwhile energises the ignition transformer.
- At the end of the pre-purge, the solenoid valve of the selected fuel and the ignition transformer are both energised and the burner starts up.
- The ignition transformer remains in operation for some seconds after the flame appears (post-ignition time), then at the end of this time it is turned off.

ONLY BURNERS HS18: at the end of the safety time the flame controller energizes the second light oil solenoid valve.

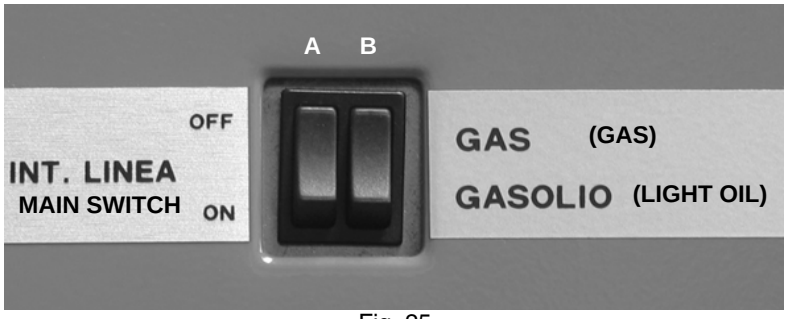

Fig. 25

PART III: MAINTENANCE

At least once a year carry out the maintenance operations listed below. In the case of seasonal servicing, it is recommended to carry out the maintenance at the end of each heating season; in the case of continuous operation the maintenance is carried out every 6 months.

⚠	**WARNING: ALL OPERATIONS ON THE BURNER MUST BE CARRIED OUT WITH THE MAINS DISCONNECTED AND THE FUEL MANAUL CUTOFF VALVES CLOSED!**
	ATTENTION: READ CAREFULLY THE "WARNINGS" CHAPTER AT THE BEGINNIG OF THIS MANUAL.

ROUTINE MAINTENANCE

- Check and clean the gas filter cartridge, if necessary replace it (see next paragraghs);
- Check and clean the fuel filter cartdrige, replace if necessary.
- Check and clean the filter inside the light oil pump: filter must be thoroughly cleaned at least once in a season to ensure correct working of the fuel unit. To remove the filter, unscrew the four screws on the cover. When reassemble, make sure that the filter is mounted with the feet toward the pump body. If the gasket between cover and pump housing should be damaged, it must be replaced. An external filter should always be installed in the suction line upstream of the fuel unit.
- Check the fuel hoses for possible leaks.
- Remove, check and clean the combustion head (see page 26);
- Check ignition electrodes, clean, adjust and, if necessary, replace them (see page 27);
- Check and carefully clean the **UV** detector, replace it if necessary; if in doubt, check the detection current, once the burner starts up (see page 28).
- Remove and clean the fuel nozzle ⚠ ***(Important:* cleaning must be performed using solvent, not metal tools!*).*** At the end of maintenance operations after the burner reassembly, light the flame and check its shape, replacing the nozzle whenever a questionable flame shape appears. Whenever the burner is used intensely, we recommend preventively replacing the nozzle at the start of each heating season.
- Clean and grease sliding and rotating parts.

⚠	**ATTENTION:** when servicing, if it was necessary to disassemble the gas train parts, remember to execute the gas proving test, once the gas train is reassembled, according to the procedure imposed by the law in force.

Removing the filter in the MULTIBLOC DUNGS MB-DLE 405..412

- Check the filter at least once a year!
- Change the filter if the pressure difference between pressure connection 1 and 3 (Fig. 26-Fig. 27)is $\Delta p > 10$ mbar.
- Change the filter if the pressure difference between pressure connection 1 and 3 (Fig. 26-Fig. 27) is twice as high compared to the last check.

You can change the filter without removing the fitting.

1 Interrupt the gas supply closing the on-off valve.
2 Remove screws 1 ÷ 4 using the Allen key n. 3 and remove filter cover 5 in Fig. 28.
3 Remove the filter 6 and replace with a new one.
4 Replace filter cover 5 and tighten screws 1 ÷ 4 without using any force and fasten.
5 Perform leakage and functional test, $p_{max.}$ = 360 mbar.

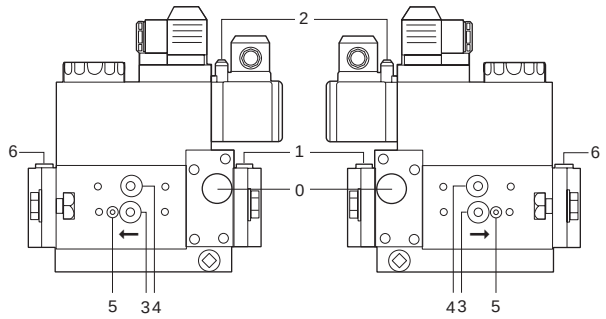

Fig. 26

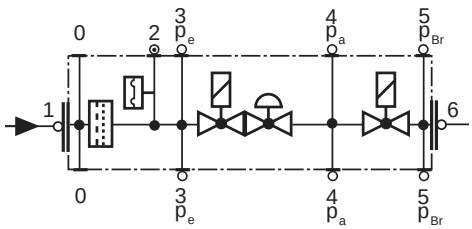

Fig. 27

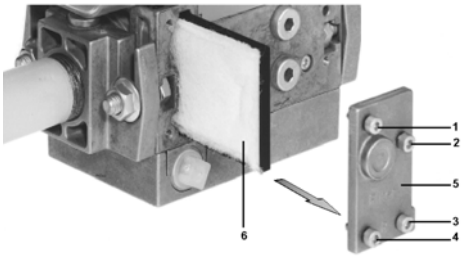

Fig. 28

Light oil filter maintenance

For correct and proper servicing, proceed as follows:

1 cutoff the required pipe section;
2 unscrew the filter cup;
3 remove the filtering cartridge, wash it with gasoline; if necessary, replace it; check the tightening O-rings and replace them if necessary;
4 replace the cup and restore the pipe line.

Removing the combustion head

1 Remove the burner cover by unscrewing the fixing screws

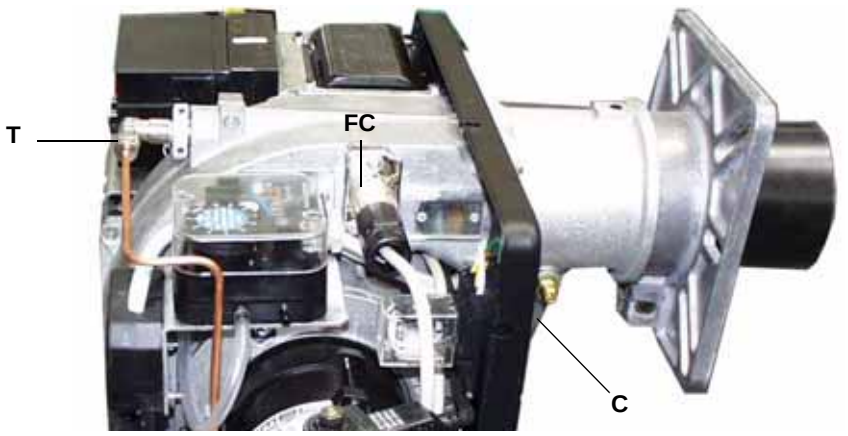

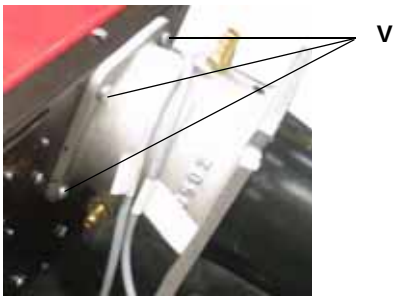

2 Remove the **FC** detection probe from its slot; disconnect the electrodes cables and remove the light oil pipe (**T**).
3 Unscrew the four screws (**V**) that fasten the head ass.y
4 Unscrew the screws that fasten the gas manifold (**C**).
5 The operator must pull the burner towards him/her self to take the combustion head out.
6 Clean the combustion head by means of a vacuum cleaner; scrape the scale off using a metallic brush.

Note: to reassemble the burner, follo the procedure above in the reversed oredr.

Adjusting the electrodes position

⚠	**ATTENTION:** avoid the electrodes to get in touch with metallic parts (blast tube, head, etc.), otherwise the boiler operation would be compromised. Check the electrodes position after any intervention on the combustion head.

- Fix a stable surface to lean on the burner during maintenance.
- To gain access to the combustion head and to the nozzles, slacken the screw on the blast tube and remove it from the part that remains fixed to the boiler.
- To guarantee a good ignition, observe the measures shown in the table below.
- Be sure to tight the screw that fix the electrodes group, before reassembling the burner.

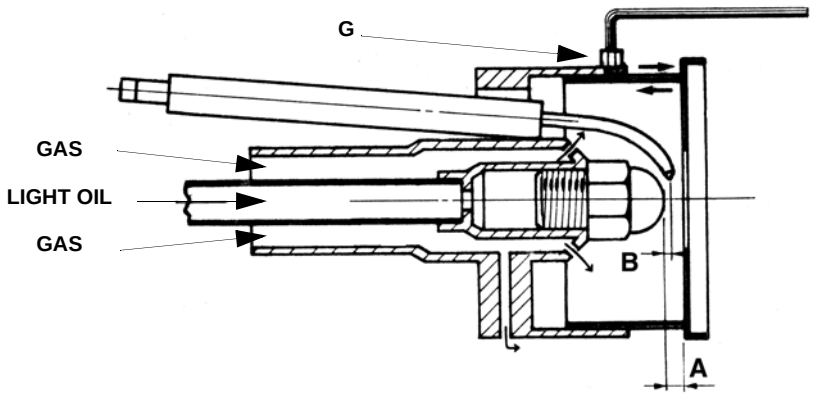

Fig. 29

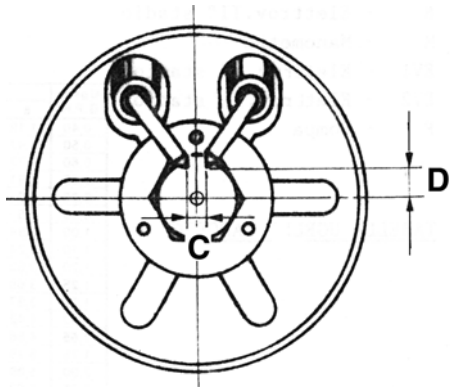

Fig. 30

	NOZZLE	A	B	C	D
HS5 - HS10 - HS18	45°	3	2.5	3	7 ÷ 8

Cleaning/replacing the electrodes

⚠	**ATTENTION:** avoid the electrodes to get in touch with metallic parts (blast tube, head, etc.), otherwise the boiler operation would be compromised. Check the electrodes position after any intervention on the combustion head.

To clean/replace the electrodes, proceed as follows:

1 remove the combustion head as described in the previous paragraph;
2 remove the electrodes ass.y and clean them;
3 in order to replace the electrodes, unscrew the fixing screws and remove them: place the new electrodes being careful to observe the measures quoted in the previous paragraph; reassemble the electrodes and the combustion head following the procedure in the reversed order.

Cleaning and replacing the detection photocell

The photocell working life is about 10000 working hours (about 1 year), at max 50°C after which it must be replaced.

To clean/replace the detection photocell, proceed as follows:

1 Disconnect the system from the electrical power supply.
2 Shut off the fuel supply
3 remove the photocell from its slot (see next figure);
4 clean the bulbe if dirty, taking care not to touch it with bare hands;
5 if necessary, replace the bulb;
6 replace the photocell into its slot.

Checking the detection current

To check the detection current follow the diagram on Đèñ. 46. If the signal is less than the value indicated, check the position of the detection electrode or detector, the electrical contacts and, if necessary, replace the electrode or the detector.

Control box	Minimum detection signal
Siemens LME..	200µA (with UV detector)

Keys

C	Electrolytic capacitor 100...470 µF; DC 10...25 V
M	Microammeter Ri max. 5000 ohm
QRA.	UV detector
rt	Red
sw	Black
br	Brown
gr	Grey
bl	Blue

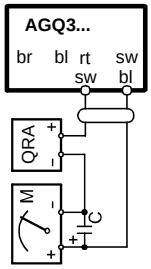

Seasonal stop

To stop the burner in the seasonal stop, proceed as follows:

1 turn the burner's main switch to 0 (Off position)
2 disconnect the power mains
3 close the fuel valve in the supply line.

Burner disposal

In case of disposal, follow the instructions according to the laws in force in your country about the "Disposal of materials".

TROUBLESHOOTING

CAUSE / FAULT	BURNER DOESN'T START	CONTINUE PRE-PURGUE	BURNER DOESN'T START AND LOCKS	BURNER DOESN'T START AND REPEATS THE CYCLE	BURNER STARTS AND REPEATS THE CYCLE	BURNER DOESN'T SWITCH TO HIGH FLAME	BURNER'S LOCKOUT DURING OPERATION	BURNER STOPS AND REPEATS CYCLE DURING OPERATION	BURNER'S LOCKOUT AFTER START	THE FLAME CONTROL DEV. REPEATS THE CYCLE WITHOUT GIVE CONSENT
MAIN SWITCH OPEN	●									
ABSENCE OF GAS	●									
MINIMUM GAS PRESSURE SWITCH FAULT OR BAD SETTING	●			●	●			●		
BOILER THERMOSTATS OPEN	●									
OVERLOAD TRIPPED INTERVENTION	●									
FUSES INTERVENTION	●									
AIR PRESSURE SWITCH FAULT OR BAD SETTING	●		●				●			●
DEFECTIVE CONTROL BOX	●	●	●				●			
DEFECTIVE AIR DAMPER ACTUATOR		●								
DEFECTIVE IGNITION TRANSFORMER			●							
IGNITION ELECTRODE WRONG POSITION			●							
THROTTLE VALVE BAD SETTING			●							
DEFECTIVE GAS GOVERNOR				●	●			●		
DEFECTIVE HI-LO FLAME THERMOSTAT						●				
ACTUATOR CAM BAD SETTING						●				
DETECTION ELECTRODE BAD POSITION OR DEFECTIVE DETECTION CIRCUIT							●		●	
REVERSED PHASE AND NEUTRAL CONNECTION									●	

WIRING DIAGRAMS

AGQ1.1A27	Auxiliary equipmet for UV photocells
CM	Manual selector NATURAL GAS / LIGHT OIL
CO	Time counter
CR1	Auxiliary relais contactd
EV1	Gas solenoid valve, network side (or valves group)
EV2	Gas solenoid valve, burner side (or valves group)
EVG	Light oil solenoid valve
EVG1	Light oil solenoid valve, 1st stage
EVG2	Light oil solenoid valve, 2nd stage (soft start)
F	Fuse
FC	Flame detection UV probe
IL	Mains switch
L	Phase
LB	Burner lock-out signalling lamp
LF	Burner operation signalling lamp
LME..	SIEMENS control box
MA	Power supply terminal board
MP	Light oil pump motor
MV	Fan motor
N	Neutral
R1	Auxiliary relay
ST	Thermostats or pressure switches serie
TA	Ignition transformer
TS	Safety thermostat/pressure switch on boiler

ATTENTION

1 - Power supply 230V 50Hz 1N a.c.

2 - Don’t reverse phase with neutral

3 - Ensure the burner is properly hearthed

Electrical diagram 01-348 Rev. 3

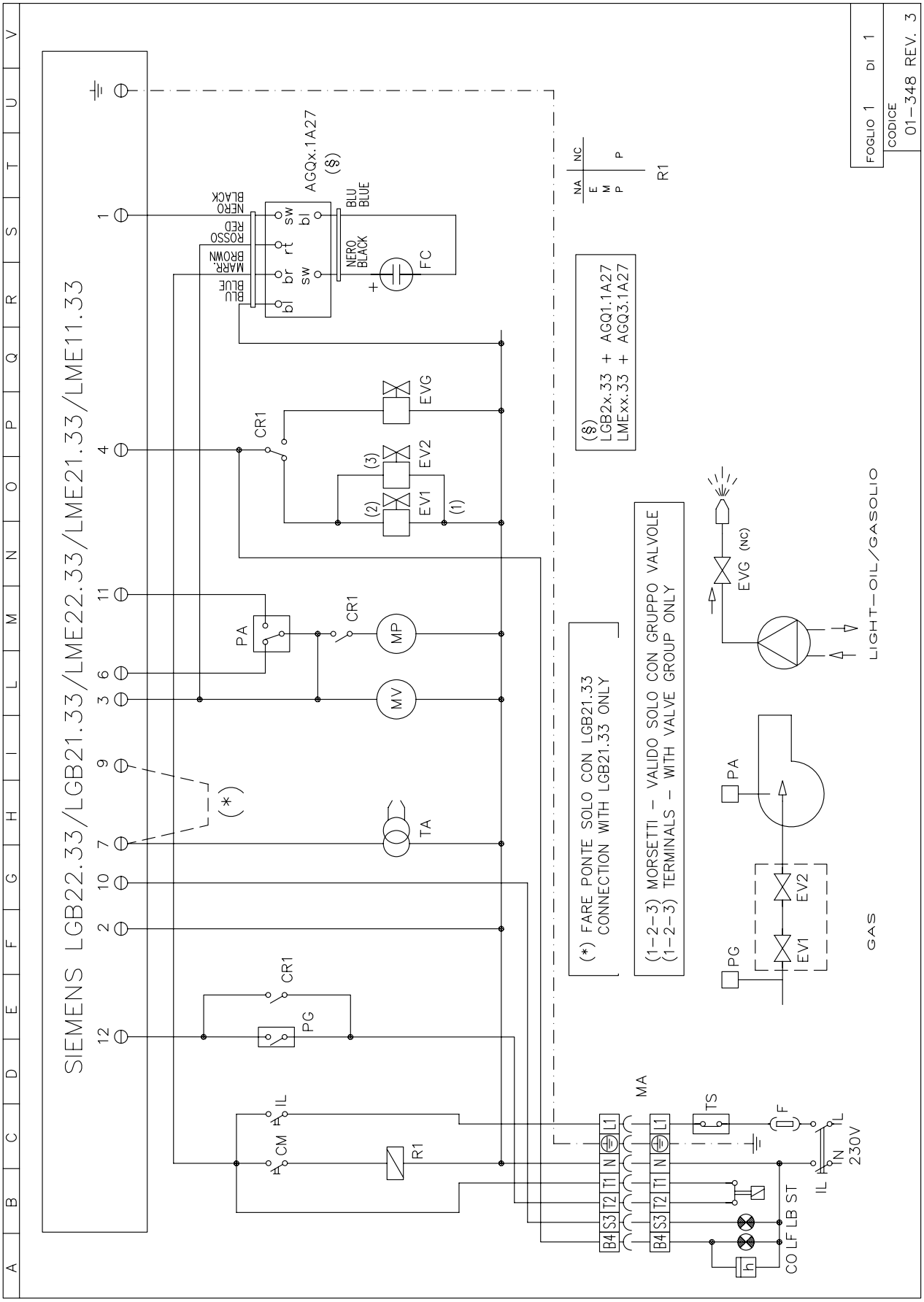

Electrical diagram 01-352 Rev. 2

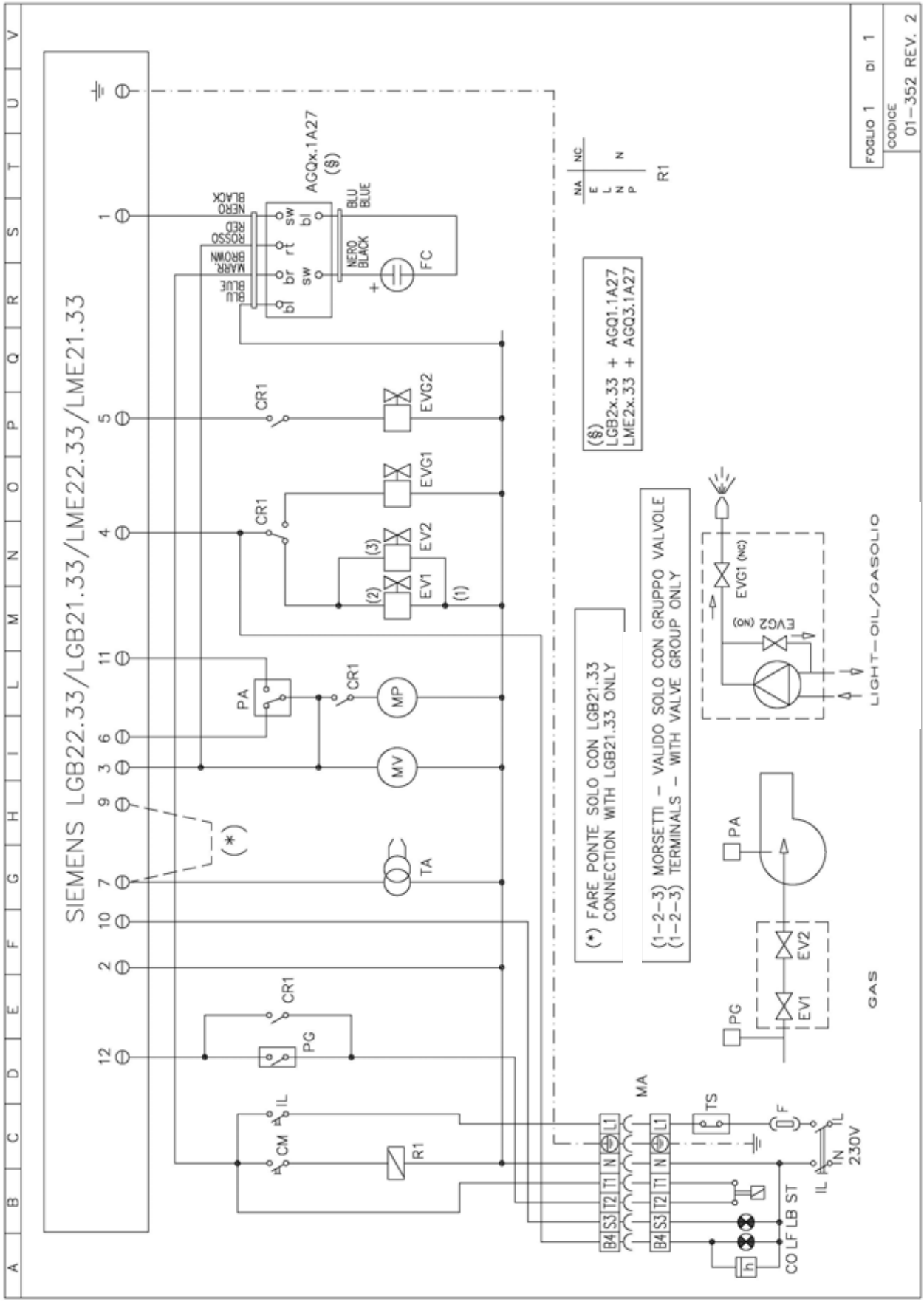

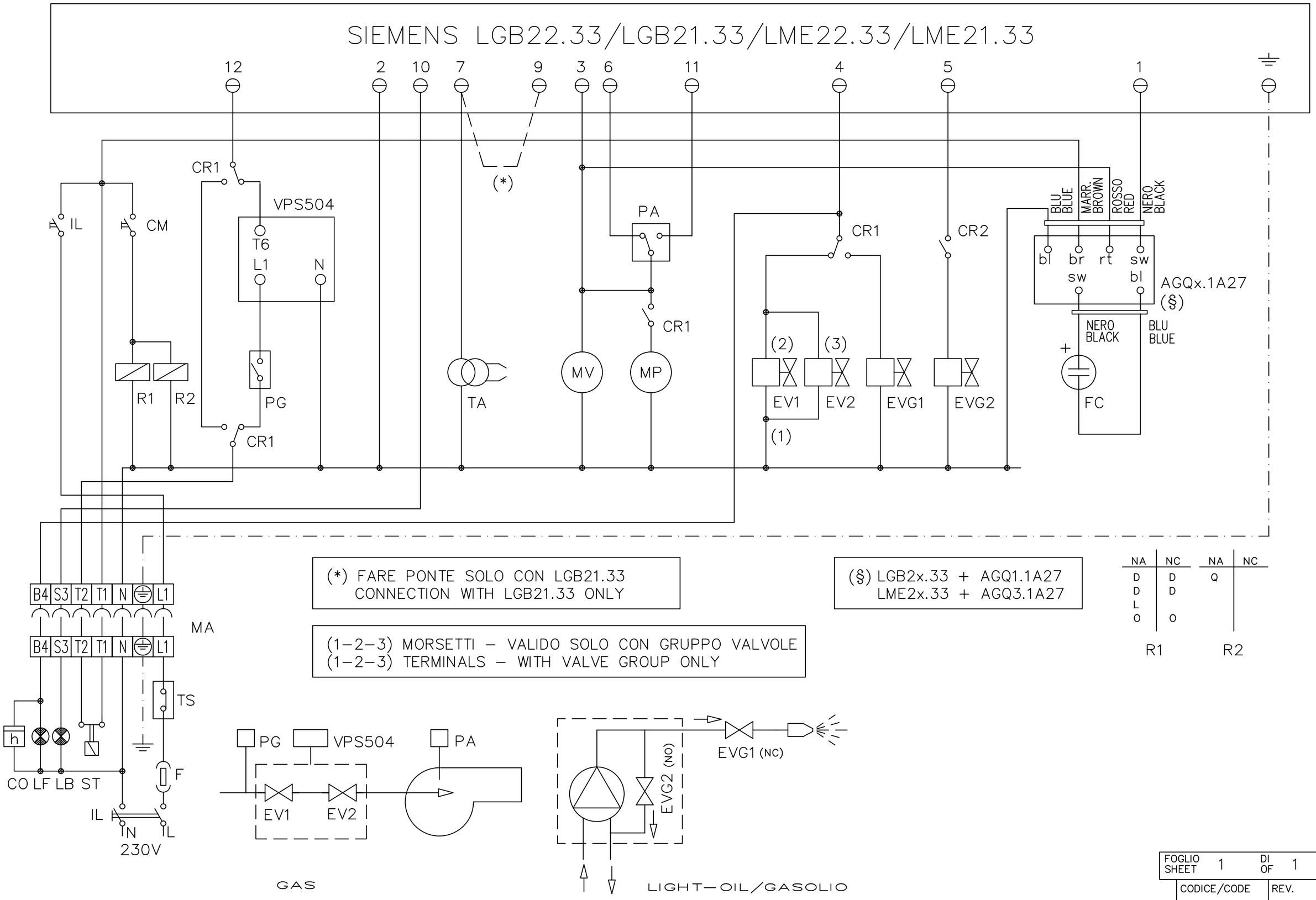

(*) FARE PONTE SOLO CON LGB21.33
CONNECTION WITH LGB21.33 ONLY

(1–2–3) MORSETTI – VALIDO SOLO CON GRUPPO VALVOLE
(1–2–3) TERMINALS – WITH VALVE GROUP ONLY

(§) LGB2x.33 + AGQ1.1A27
LME2x.33 + AGQ3.1A27

NA	NC
D	D
D	D
L	
O	O

R1

NA	NC
Q	

R2

FOGLIO SHEET	1	DI OF	1
CODICE/CODE	01 – 380	REV.	01

L E G E N D A cod. 01-380 REV. 1

AGQx.1A27	-	Apparecchio ausiliario per sonde UV
CM	-	Commutatore GAS / GASOLIO
CO	-	Contaore
CR1-CR2	-	Contatti relè ausiliari
EV1	-	Elettrovalvola gas lato rete (o gruppo valvole)
EV2	-	Elettrovalvola gas lato bruciatore (o gruppo valvole)
EVG1	-	Elettrovalvola gasolio I° stadio
EVG2	-	Elettrovalvola gasolio II° stadio (salto di pressione)
F	-	Fusibile
FC	-	Sonda UV rivelazione fiamma
IL	-	Interruttore di linea
L	-	Fase
LB	-	Lampada segnalazione blocco bruciatore
LF	-	Lampada segnalazione funzionamento bruciatore
LGB2x../LME2x..	-	Apparecchiatura SIEMENS controllo fiamma
MA	-	Morsettiera di alimentazione
MP	-	Motore pompa gasolio
MV	-	Motore ventilatore
N	-	Neutro
R1-R2	-	Relè ausiliari
ST	-	Serie termostati o pressostati
TA	-	Trasformatore di accensione
TS	-	Termostato/pressostato di sicurezza caldaia
VPS504	-	Controllo tenuta valvole DUNGS

ATTENZIONE :
1 - Alimentazione elettrica 230V 50Hz 1N a.c.
2 - Non invertire fase con neutro
3 - Assicurare al bruciatore una buona messa a terra

L E G E N D cod. 01-380 REV. 1

AGQ1.1A27	-	Auxiliary unit for UV supervision
CM	-	Manual operation switch GAS / LIGHT OIL
CO	-	Time meter
CR1-CR2	-	Relay contacts
EV1	-	Gas electro-valve upstream (or valve group)
EV2	-	Gas electro-valve downstream (or valve group)
EVG1	-	Light oil electro-valve I° stage
EVG2	-	Light oil electro-valve II° stage (pressure jump)
F	-	Fuse
FC	-	UV flame detection
IL	-	Main switch
L	-	Phase
LB	-	Burner lockout indicator light
LF	-	Indicator light for burner functioning
LGB2x../LME2x..	-	SIEMENS flame monitor device
MA	-	Supply terminal block
MP	-	Pump motor
MV	-	Fan motor
N	-	Neutral
R1-R2	-	Auxiliary relays
ST	-	Series of thermostats or pressure switches
TA	-	Ignition transformer
TS	-	Safety thermostat or pressure switch
VPS504	-	DUNGS valve leakage monitor device

WARNING :
1 - Electrical supply 230V 50Hz 1N a.c.
2 - Do not reverse phase with neutral
3 - Ensure burner is properly earthed

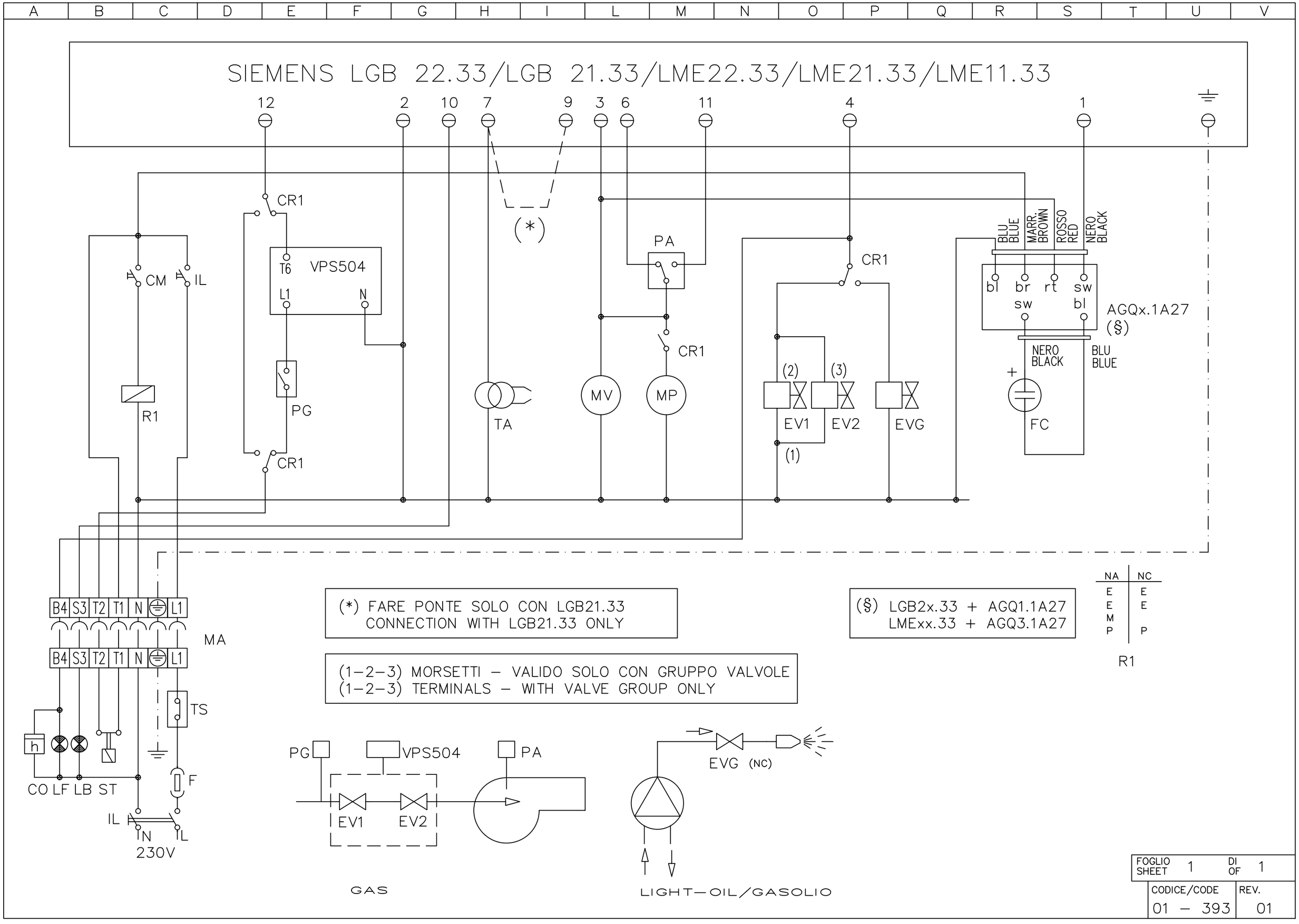
SIEMENS LGB 22.33/LGB 21.33/LME22.33/LME21.33/LME11.33
12
2
10
7
9
3
6
11
4
1
CR1
VPS504
T6
L1
N
CM
IL
R1
PG
TA
(*)
PA
MV
MP
EV1
EV2
EVG
(1)
(2)
(3)
BLU BLUE
MARR. BROWN
ROSSO RED
NERO BLACK
bl
br
rt
sw
AGQx.1A27
(§)
FC
B4
S3
T2
T1
MA
TS
h
CO LF LB ST
F
230V
PG
VPS504
PA
EV1
EV2
GAS
EVG (NC)
LIGHT—OIL/GASOLIO
(*) FARE PONTE SOLO CON LGB21.33
CONNECTION WITH LGB21.33 ONLY
(1–2–3) MORSETTI – VALIDO SOLO CON GRUPPO VALVOLE
(1–2–3) TERMINALS – WITH VALVE GROUP ONLY
(§) LGB2x.33 + AGQ1.1A27
LMExx.33 + AGQ3.1A27
NA
NC
E
E
M
P
R1
FOGLIO SHEET 1
DI OF 1
CODICE/CODE 01 – 393
REV. 01

L E G E N D A cod. 01-393 REV. 1

AGQx.1A27	-	Apparecchio ausiliario per sonde UV
CM	-	Commutatore GAS / GASOLIO
CO	-	Contaore
CR1	-	Contatti relè ausiliario
EV1	-	Elettrovalvola gas lato rete (o gruppo valvole)
EV2	-	Elettrovalvola gas lato bruciatore (o gruppo valvole)
EVG	-	Elettrovalvola gasolio
F	-	Fusibile
FC	-	Sonda UV rivelazione fiamma
IL	-	Interruttore di linea
L	-	Fase
LB	-	Lampada segnalazione blocco bruciatore
LF	-	Lampada segnalazione funzionamento bruciatore
LGB../LME..	-	Apparecchiatura SIEMENS controllo fiamma
MA	-	Morsettiera di alimentazione
MP	-	Motore pompa gasolio
MV	-	Motore ventilatore
N	-	Neutro
R1	-	Relè ausiliario
ST	-	Serie termostati o pressostati
TA	-	Trasformatore di accensione
TS	-	Termostato/pressostato di sicurezza caldaia
VPS504	-	Controllo di tenuta valvole DUNGS

ATTENZIONE :
1 - Alimentazione elettrica 230V 50Hz 1N a.c.
2 - Non invertire fase con neutro
3 - Assicurare al bruciatore una buona messa a terra

L E G E N D cod. 01-393 REV. 1

AGQx.1A27	-	Auxiliary unit for UV supervision
CM	-	Manual operation switch GAS / LIGHT OIL
CO	-	Time meter
CR1	-	Relay contacts
EV1	-	Gas electro-valve upstream (or group valve)
EV2	-	Gas electro-valve downstream (or group valve)
EVG	-	Light oil electro-valve
F	-	Fuse
FC	-	UV flame detection
IL	-	Main switch
L	-	Phase
LB	-	Burner lockout indicator light
LF	-	Indicator light for burner functioning
LGB../LME..	-	SIEMENS flame monitor device
MA	-	Supply terminal block
MP	-	Pump motor
MV	-	Fan motor
N	-	Neutral
R1	-	Auxiliary relay
ST	-	Series of thermostats or pressure switches
TA	-	Ignition transformer
TS	-	Safety thermostat or pressure switch
VPS504	-	DUNGS leakage monitor device

WARNING :
1 - Electrical supply 230V 50Hz 1N a.c.
2 - Do not reverse phase with neutral
3 - Ensure burner is properly earthed

SPARE PARTS

Desription	Code		
	HS5	HS10	HS18
CONTROL BOX	2020466	2020467	2020467
IGNITION ELECTRODE	2080245	2080246	2080246
OIL FILTER	2090027	2090027	2090025
GASKET	2110038	2110031	2110031
FAN WHEEL	2150003	2150004	2150004
AIR PRESSURE SWITCH	2160053	2160053	2160053
MINIMUM GAS PRESSURE SWITCH	2160076	2160076	2160076
IGNITION TRANSFORMER	2170106	2170106	2170106
FAN MOTOR	2180013	2180703	2180703
PUMP MOTOR	2180713	2180713	2180713
GAS VALVE GROUP - Dungs MB-DLE..	2190339	2190340	2190341
GAS PROVING SYSTEM (option)	2191604	2191604	2191604
FLEXIBLE HOSE	2340001	2340001	2340001
UV PROBE	2510001	2510001	2510001
SIEMENS AGQ.. UV PROBE ADAPTER	2510114	2510114	2510114
MOTOR-PUMP COUPLING	2540055	2540055	2540055
PUMP	2590130	2590130	2590152
NOZZLE	2610002	2610002	2610002
STANDARD COMBUSTION HEAD	3501701	3501703	3501705
EXTENDED COMBUSTION HEAD	3501702	3501704	3501706
STANDARD BLAST TUBE	3090073	3090074	3090075
EXTENDED BLAST TUBE	3090087	3090094	3090098
IGNITION CABLE	6050122	6050122	6050122

APPENDIX: COMPONENTS CHARACTERISTICS

SIEMENS LME11/21/22 CONTROL BOX

The series of equipment LME.. is used for the starup and supervisione of 1- or 2- stage gas burners. The series LME..is interchangeable with the series LGB.. and LMG.., all diagrams and accessories are interchangeable, the main features are:

- Indications of error codes by a signalling multicolor LED in the lockout reset button;
- Programmer fix times for the digital management of signals.

Comparative table

LGB Series	LMG Series	LME Series
---	LMG 25.33	LME 11.33
LGB 21.33	LMG 21.33	LME 21.33
LGB 22.33	LMG 22.33	LME 22.33

Preconditions for burner startup

- Burner control must be reset
- All contacts in the line are closed, request for heat
- No undervoltage
- Air pressure switch LP must be in its “no-load” position
- Fan motor or AGK25 is closed
- Flame detector is darkened and there is no extraneous light

Undervoltage

Safety shutdown from the operating position takes place should mains voltage drop below about AC 175 V (at UN = AC 230 V)

Restart is initiated when mains voltage exceeds about AC 185 V (at UN = AC 230 V).

Controlled intermittent operation

After no more than 24 hours of continuous operation, the burner control will initiate automatic controlled shutdown followed by a restart.

Reversed polarity protection with ionization

If the connections of live conductor (terminal 12) and neutral conductor (terminal 2) aremixed up, the burner control will initiate lockout at the end of the safety time “TSA”.

Control sequence in the event of fault

If lockout occurs, the outputs for the fuel valves, the burner motor and the ignition equipment will immediately be deactivated (< 1 second).

Operational status indication

In normal operation, the different operating states are showed by means of the multicolor LED, inside the lockout reset button:

LED	**red LED** **yellow LED** **green LED**	..... Steady on ❍... Off

During startup, status indication takes place according to the table:

Status	Color code	Color
Waiting time tw, other waiting states	❍.....	Off
Ignition phase, ignition controlled	● ❍ ● ❍ ● ❍ ● ❍ ● ❍ ●	Flashing yellow
Operation, flame ok	□.....	Green
Operation, flame not ok	□ ❍ □ ❍ □ ❍ □ ❍ □ ❍	Flashing green
Extraneous light on burner startup	□ ▲ □ ▲ □ ▲ □ ▲ □ ▲	Green - red
Undervoltage	● ▲ ● ▲ ● ▲ ● ▲ ● ▲	Yellow - red
Fault, alarm	▲.....	Red
Error code output (refer to “Error code table”)	▲❍ ▲❍ ▲❍ ▲❍	Flashing red

START-UP PROGRAM

As far as the startup program, see its time diagram:

A Start command (switching on)

This command is triggered by control thermostat / pressure controller «R». Terminal 12 receives voltage and the programming mechanism starts running. On completion of waiting time «tw» with the LME21..., or after air damper «SA» has reached the nominal load position (on completion of «t11») with the LME22..., fan motor «M» will be started.

tw Waiting time

During the waiting time, air pressure monitor «LP» and flame relay «FR» are tested for correct contact positions.

t11 Programmed opening time for actuator «SA»

(Only with LME22...) The air damper opens until the nominal load position is reached. Only then will fan motor «M» be switched on.

t10 Specified time for air pressure signal

On completion of this period of time, the set air pressure must have built up, or else lockout will occur.

t1 Prepurge time

Purging the combustion chamber and the secondary heating surfaces: required with low-fire air volumes when using the LME21... and with nominal load air volumes when using the LME22.... The diagrams show the so-called prepurge time «t1» during which air pressure monitor «LP» must indicate that the required air pressure is available. The effective prepurge time «t1» comprises interval end «tw» through «t3».

t12 Programmed closing time for actuator «SA»

(Only with LME22...)During «t12», the air damper travels to the low-fire position.

t3 Preignition time

During «t3» and up to the end of «TSA», flame relay «FR» is forced to close. On completion of «t3», the release of fuel is triggered at terminal 4.

TSA Ignition safety time

On completion of «TSA», a flame signal must be present at terminal 1. That flame signal must be continuously available until shutdown occurs, or else flame relay «FR» will be deenergized, resulting in lockout.

t4 Interval BV1 and BV2-LR

Time between the end of TSA and the signal to the second fuel valve BV2 or to the load controller LR

B - B' Interval for flame establishment

C Burner operation position

C - D Burner operation (heat production)

D Controlled by "R" shutdown

The burner stops and the control device is ready for a new startup.

LME11 control sequence

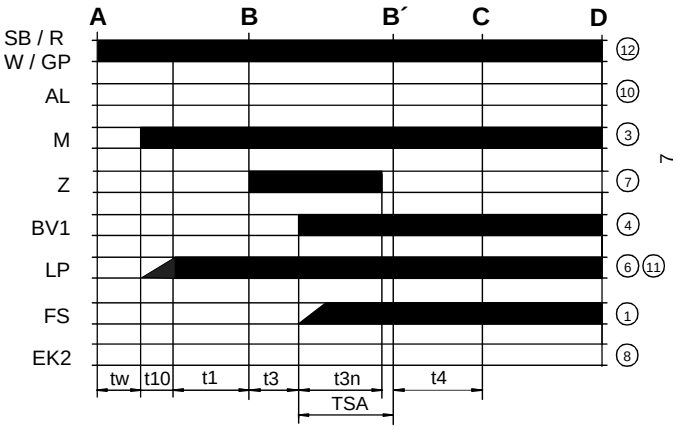

LME22 control sequence

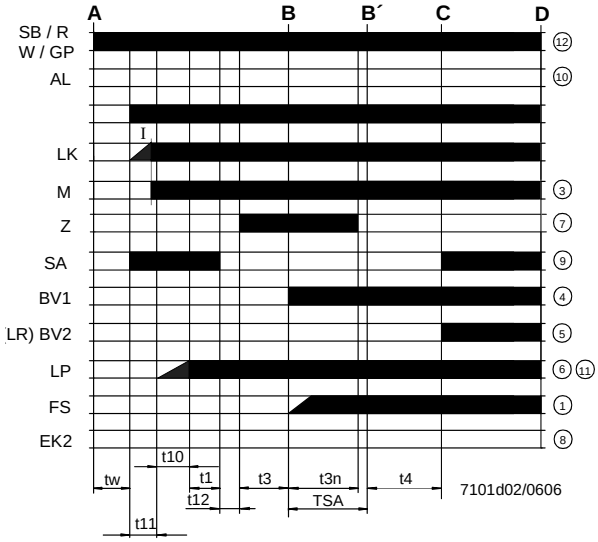

LME21 control sequence

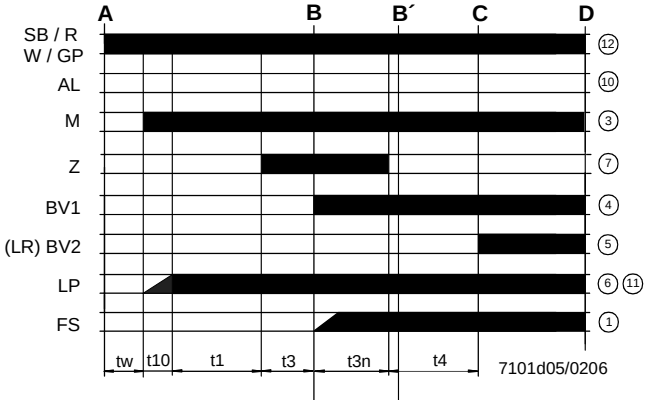

Control sequence

tw	Waiting time
t1	Purge time
TSA	Ignition safety time
t3	Preignition time
t3n	Postignition time
t4	Interval between BV1 and BV2/LR
t10	Specified time for air pressure signal
t11	Programmed opening time for actuator SA
t12	Programmed closing time for actuator SA

LME11 connection diagram

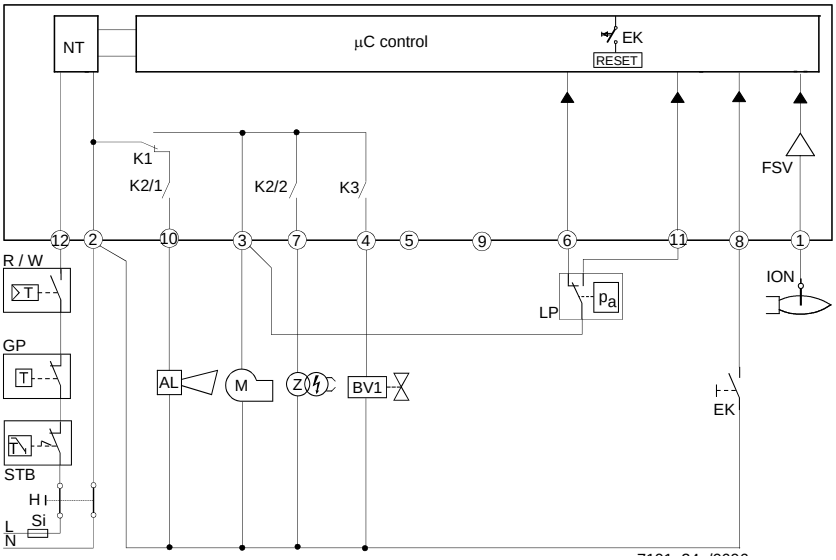

LME21 connection diagram

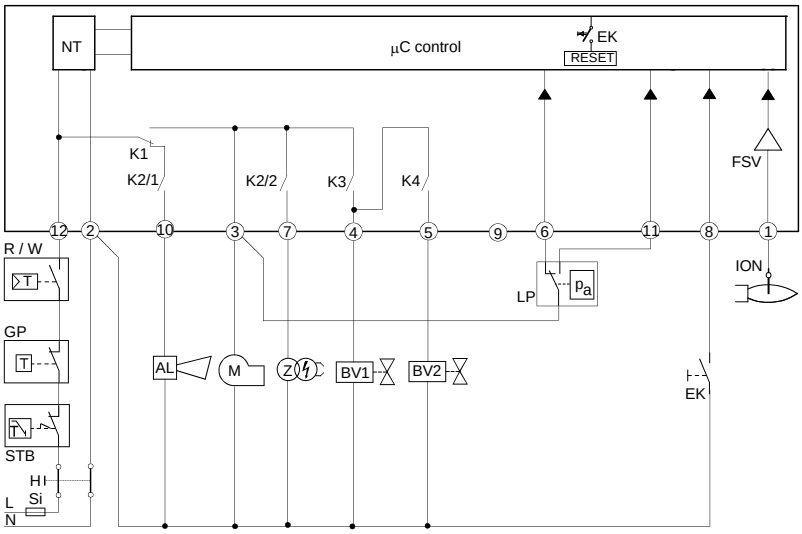

LME22 connection diagram

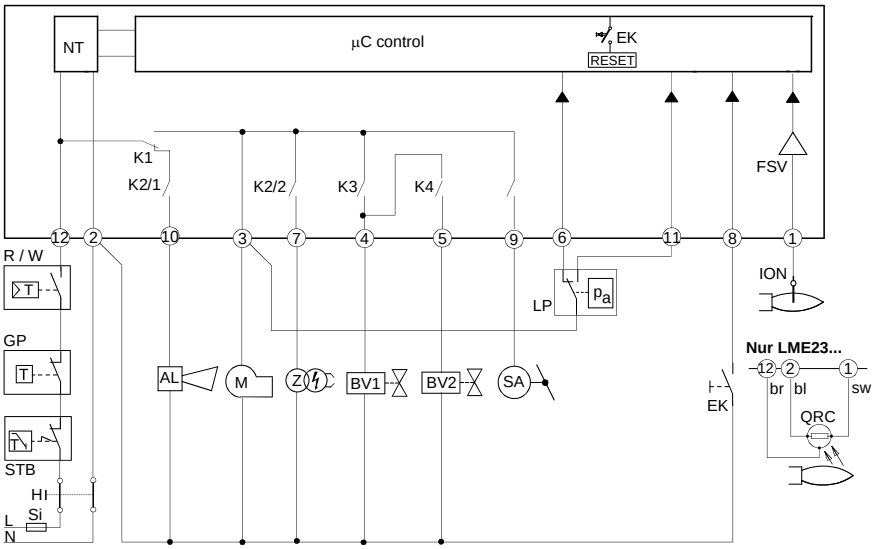

Connection diagram

AL	Error message (alarm)
BV	Fuel valve
EK2	Remote lockout reset button
FS	Flame signal
GP	Gas pressure switch
LP	Air pressure switch
LR	Load controller
M	Fan motor
R	Control thermostat/pressurestat
SB	Safety limit thermostat
W	Limit thermostat /pressure switch
Z	Ignition transformer

CONTROL PROGRAM IN THE EVENT OF FAULT

- If a fault occurs, all outputs will immediately be deactivated (in less than 1s).
- After an interruption of power, a restart will be made with the full program sequence.
- If the operating voltage drops below the undervoltage thresold, a safety shutdown is performed.
- If the operating voltage exceeds the undervoltage thresold, a restart will be performed.
- In case of extraneous light during “t1”, a lockout occurs.
- In case of extraneous light during “tw”, there is a prevention of startup and a lockout after 30 seconds.
- In case of no flame at the end of TSA, there will be max. 3 repetitions of the startup cycle, followed by a lockout at the end of TSA, for mod. LME11..; directly a lockout at the end of TSA for LME21-22 models.
- For LME11 model: if a loss of flame occurs during operation, in case of an establishment of flame at the end of TSA, there will be max. 3 repetitions, otherwise a lockout will occur.
- For LME21-22 models: if a loss of flame occurs during operation, there will be a lockout.
- If the contact of air pressure monitor LP is in working position, a prevention of startup and lockout after 65 seconds will occur.
- IIf the contact of air pressure monitor LP is in normal position, a lockout occurs at the end of t10.
- If no air pressure signal is present after completion of t1, a lockout will occur.

In the event of lockout, the LME.. remains locked and the red signal lamp (LED) will light up.The burner control can immediately be reset. This state is also mantained in the case fo mains failure.

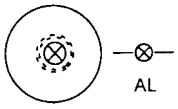

DIAGNOSITICS OF THE CASUE OF FAULT

- Press the lockout reset button for more than 3 seconds to activate the visual diagnostics.
- Count the number of blinks of the red signsl lamp and check the fault condition on the “Error code table” (the device repeats the blinks for regular intervals).

During diagnostics, the control outputs are deactivated:

- the burner remains shut down;
- external fault indication is deactivated;
- fault status is showed by the red LED, inside the LME’s lockout reset buttonaccording to the “Error code table”:

CONTROL BOX LOCKED

ERROR CODE TABLE	
2 blinks **	**No establishment of flame at the end of TSA** - Faulty or soiled fuel valves - Faulty or soiled flame detector - Inadequate adjustement of burner, no fuel - Faulty ignition equipment
3 blinks ***	**The air pressure switch does not switch or remains in idle position:** - LP is faulty - Loss of air pressure signal after t10 - LPis welded in normal position.
4 blinks ****	- Extraneous light when burner starts up.
5 blinks *****	- LP is working position.
6 blinks *****	Free.
7 blinks *******	**Loss of flame during operation** - Faulty or soiled fuel valves - Faulty or soiled flame detector - Inadequate adjustement of burner
8 ÷ 9 blinks	Free
10 blinks **********	**Faulty output contacts** - Wiring error - Anomalous voltage on ouput terminals - Other faults
14 blinks **************	- CPI contact not closed.

RESETTING THE BURNER CONTROL

When lockout occurs, the burner control can immediately be reset, by pressing the lockout reset button for about 1..3 seconds. The LME.. can only be reset when all contacts in the line are closed and when there is no undervoltage.

LIMITATION OF REPETITIONS (only for LME11.. model)

If no flame is established at the end of TSA, or if the flame is lost during operation, a maximum of 3 repetitions per controller startup can be performed via “R”, otherwise lockout will be initiated. Counting of repetitions is restarted each time a controlled startup via “R” takes place.

TECHNICAL CHARACTERISTICS

Mains voltage	120V AC +10% / -15% 230V AC +10% / -15%
Frequency	50 ... 60 Hz +/- 6%
Power consumption	12VA
External primary fuse	max. 10 A (slow)
input current at terminal 12	max. 5 A
Thermostats cable length	max. 3 m
Index of protection	IP40 (to be ensured during mounting)
Operating conditions	-20... +60 °C, < 95% UR
Storage conditions	-20... +60 °C, < 95% UR
Weight	approx. 160 g

C.I.B. UNIGAS S.p.A.
Via L.Galvani, 9 - 35011 Campodarsego (PD) - ITALY
Tel. +39 049 9200944 - Fax +39 049 9200945/9201269
web site: www.cibunigas.it - e-mail: cibunigas@cibunigas.it

Note: specifications and data subject to change. Errors and omissions exceptd.