PG60
PG70
PG81

LMV5x Microprocessor-controlled Light oil burners

MANUAL OF INSTALLATION - USE - MAINTENANCE

CIB UNIGAS

BURNERS - BRUCIATORI - BRULERS - BRENNER - QUEMADORES - ГОРЕЛКИ

M039493CA Rev. 0.2 10/2023

DANGERS, WARNINGS AND NOTES OF CAUTION

THIS MANUAL IS SUPPLIED AS AN INTEGRAL AND ESSENTIAL PART OF THE PRODUCT AND MUST BE DELIVERED TO THE USER.

INFORMATION INCLUDED IN THIS SECTION ARE DEDICATED BOTH TO THE USER AND TO PERSONNEL FOLLOWING PRODUCT INSTALLATION AND MAINTENANCE.

THE USER WILL FIND FURTHER INFORMATION ABOUT OPERATING AND USE RESTRICTIONS, IN THE SECOND SECTION OF THIS MANUAL. WE HIGHLY RECOMMEND TO READ IT.

CAREFULLY KEEP THIS MANUAL FOR FUTURE REFERENCE.

1) GENERAL INTRODUCTION

- The equipment must be installed in compliance with the regulations in force, following the manufacturer's instructions, by qualified personnel.
- Qualified personnel means those having technical knowledge in the field of components for civil or industrial heating systems, sanitary hot water generation and particularly service centres authorised by the manufacturer.
- Improper installation may cause injury to people and animals, or damage to property, for which the manufacturer cannot be held liable.
- Remove all packaging material and inspect the equipment for integrity.

In case of any doubt, do not use the unit - contact the supplier.

The packaging materials (wooden crate, nails, fastening devices, plastic bags, foamed polystyrene, etc), should not be left within the reach of children, as they may prove harmful.

- Before any cleaning or servicing operation, disconnect the unit from the mains by turning the master switch OFF, and/or through the cut-out devices that are provided.
- Make sure that inlet or exhaust grilles are unobstructed.
- In case of breakdown and/or defective unit operation, disconnect the unit. Make no attempt to repair the unit or take any direct action.

Contact qualified personnel only.

Units shall be repaired exclusively by a servicing centre, duly authorised by the manufacturer, with original spare parts and accessories.

Failure to comply with the above instructions is likely to impair the unit's safety.

To ensure equipment efficiency and proper operation, it is essential that maintenance operations are performed by qualified personnel at regular intervals, following the manufacturer's instructions.

- When a decision is made to discontinue the use of the equipment, those parts likely to constitute sources of danger shall be made harmless.
- In case the equipment is to be sold or transferred to another user, or in case the original user should move and leave the unit behind, make sure that these instructions accompany the equipment at all times so that they can be consulted by the new owner and/or the installer.
- This unit shall be employed exclusively for the use for which it is meant. Any other use shall be considered as improper and, therefore, dangerous.

The manufacturer shall not be held liable, by agreement or otherwise, for damages resulting from improper installation, use and failure to comply with the instructions supplied by the manufacturer.The occurrence of any of the following circustances may cause explosions, polluting unburnt gases (example: carbon monoxide CO), burns, serious harm to people, animals and things:

- Failure to comply with one of the WARNINGS in this chapter
- Incorrect handling, installation, adjustment or maintenance of the burner
- Incorrect use of the burner or incorrect use of its parts or optional supply

2) SPECIAL INSTRUCTIONS FOR BURNERS

- The burner should be installed in a suitable room, with ventilation openings complying with the requirements of the regulations in force, and sufficient for good combustion.
- Only burners designed according to the regulations in force should be used.
- This burner should be employed exclusively for the use for which it was designed.
- Before connecting the burner, make sure that the unit rating is the same as delivery mains (electricity, gas oil, or other fuel).
- Observe caution with hot burner components. These are, usually, near to the flame and the fuel pre-heating system, they become hot during the unit operation and will remain hot for some time after the burner has stopped.

When the decision is made to discontinue the use of the burner, the user shall have qualified personnel carry out the following operations:

a Remove the power supply by disconnecting the power cord from the mains.

b Disconnect the fuel supply by means of the hand-operated shut-off valve and remove the control handwheels from their spindles.

Special warnings

- Make sure that the burner has, on installation, been firmly secured to the appliance, so that the flame is generated inside the appliance fire-box.
- Before the burner is started and, thereafter, at least once a year, have qualified personnel perform the following operations:

a set the burner fuel flow rate depending on the heat input of the appliance;

b set the flow rate of the combustion-supporting air to obtain a combustion efficiency level at least equal to the lower level required by the regulations in force;

c check the unit operation for proper combustion, to avoid any harmful or polluting unburnt gases in excess of the limits permitted by the regulations in force;

d make sure that control and safety devices are operating properly;

e make sure that exhaust ducts intended to discharge the products of combustion are operating properly;

f on completion of setting and adjustment operations, make sure that all mechanical locking devices of controls have been duly tightened;

g make sure that a copy of the burner use and maintenance instructions is available in the boiler room.

- In case of a burner shut-down, reser the control box by means of the RESET pushbutton. If a second shut-down takes place, call the Technical Service, **without trying to RESET further**.
- The unit shall be operated and serviced by qualified personnel only, in compliance with the regulations in force.

3) GENERAL INSTRUCTIONS DEPENDING ON FUEL USED

3a) ELECTRICAL CONNECTION

- For safety reasons the unit must be efficiently earthed and installed as required by current safety regulations.
- It is vital that all saftey requirements are met. In case of any doubt, ask for an accurate inspection of electrics by qualified personnel, since the manufacturer cannot be held liable for damages that may be caused by failure to correctly earth the equipment.
- Qualified personnel must inspect the system to make sure that it is adequate to take the maximum power used by the equipment shown on the equipment rating plate. In particular, make sure that the system cable cross section is adequate for the power absorbed by the unit.
- No adaptors, multiple outlet sockets and/or extension cables are permitted to connect the unit to the electric mains.
- An omnipolar switch shall be provided for connection to mains, as required by the current safety regulations.
- The use of any power-operated component implies observance of a few basic rules, for example:
  - do not touch the unit with wet or damp parts of the body and/or with bare feet;
  - do not pull electric cables;
  - do not leave the equipment exposed to weather (rain, sun, etc.) unless expressly required to do so;
  - do not allow children or inexperienced persons to use equipment;
- The unit input cable shall not be replaced by the user.
  In case of damage to the cable, switch off the unit and contact qualified personnel to replace.
  When the unit is out of use for some time the electric switch supplying all the power-driven components in the system (i.e. pumps, burner, etc.) should be switched off.

3b) FIRING WITH GAS, LIGHT OIL OR OTHER FUELS

GENERAL

- The burner shall be installed by qualified personnel and in compliance with regulations and provisions in force; wrong installation can cause injuries to people and animals, or damage to property, for which the manufacturer cannot be held liable.
- Before installation, it is recommended that all the fuel supply system pipes be carefully cleaned inside, to remove foreign matter that might impair the burner operation.
- Before the burner is commissioned, qualified personnel should inspect the following:

a the fuel supply system, for proper sealing;
b the fuel flow rate, to make sure that it has been set based on the firing rate required of the burner;
c the burner firing system, to make sure that it is supplied for the designed fuel type;
d the fuel supply pressure, to make sure that it is included in the range shown on the rating plate;
e the fuel supply system, to make sure that the system dimensions are adequate to the burner firing rate, and that the system is equipped with all the safety and control devices required by the regulations in force.

- When the burner is to remain idle for some time, the fuel supply tap or taps should be closed.

SPECIAL INSTRUCTIONS FOR USING GAS

Have qualified personnel inspect the installation to ensure that:

a the gas delivery line and train are in compliance with the regulations and provisions in force;
b all gas connections are tight;
c the boiler room ventilation openings are such that they ensure the air supply flow required by the current regulations, and in any case are sufficient for proper combustion.

- Do not use gas pipes to earth electrical equipment.
- Never leave the burner connected when not in use. Always shut the gas valve off.
- In case of prolonged absence of the user, the main gas delivery valve to the burner should be shut off.

Precautions if you can smell gas

a do not operate electric switches, the telephone, or any other item likely to generate sparks;
b immediately open doors and windows to create an air flow to purge the room;
c close the gas valves;
d contact qualified personnel.

- Do not obstruct the ventilation openings of the room where gas appliances are installed, to avoid dangerous conditions such as the development of toxic or explosive mixtures.

DIRECTIVES AND STANDARDS

Gas burners

European directives

-Regulation 2016/426/UE (appliances burning gaseous fuels)
-2014/35/UE (Low Tension Directive)
-2014/30/UE (Electromagnetic compatibility Directive)
-2006/42/EC (Machinery Directive)

Harmonized standards

-UNI EN 676 (Automatic forced draught burners for gaseous fuels)
-EN 55014-1 (Electromagnetic compatibility- Requirements for house hold appliances, electric tools and similar apparatus)
-EN 60204-1:2006 (Safety of machinery – Electrical equipment of machines.)
-CEI EN 60335-1 (Specification for safety of household and similar electrical appliances);
-CEI EN 60335-2-102 (Household and similar electrical appliances. Safety. Particular requirements for gas, oil and solid-fuel burning appliances having electrical connections).
-UNI EN ISO 12100:2010 (Safety of machinery - General principles for design - Risk assessment and risk reduction);

Light oil burners

European directives

-2014/35/UE (Low Tension Directive)
-2014/30/UE (Electromagnetic compatibility Directive)
-2006/42/EC (Machinery Directive)

Harmonized standards

-UNI EN 267-2011(Automatic forced draught burners for liquid fuels)
-EN 55014-1 (Electromagnetic compatibility- Requirements for house hold appliances, electric tools and similar apparatus)
-EN 60204-1:2006 (Safety of machinery – Electrical equipment of machines.)
-CEI EN 60335-1 (Specification for safety of household and similar electrical appliances);
-CEI EN 60335-2-102 (Household and similar electrical appliances. Safety. Particular requirements for gas, oil and solid-fuel burning appliances having electrical connections).
-UNI EN ISO 12100:2010 (Safety of machinery - General principles for design - Risk assessment and risk reduction);

Heavy oil burners

European Directives

-2014/35/UE (Low Tension Directive)
-2014/30/UE (Electromagnetic compatibility Directive)
-2006/42/EC (Machinery Directive)

Harmonized standards

-UNI EN 267(Automatic forced draught burners for liquid fuels)
-EN 55014-1 (Electromagnetic compatibility- Requirements for house hold appliances, electric tools and similar apparatus)
-EN 60204-1:2006 (Safety of machinery – Electrical equipment of machines.)
-CEI EN 60335-1 (Specification for safety of household and similar electrical appliances);
-CEI EN 60335-2-102 (Household and similar electrical appliances. Safety. Particular requirements for gas, oil and solid-fuel burning appliances having electrical connections).
-UNI EN ISO 12100:2010 (Safety of machinery - General principles for design - Risk assessment and risk reduction);

Gas - Light oil burners

European Directives

-Regulation 2016/426/UE (appliances burning gaseous fuels)
-2014/35/UE (Low Tension Directive)
-2014/30/UE (Electromagnetic compatibility Directive)
-2006/42/EC (Machinery Directive)

Harmonized standards

-UNI EN 676 (Automatic forced draught burners for gaseous fuels)
-UNI EN 267(Automatic forced draught burners for liquid fuels)
-EN 55014-1 (Electromagnetic compatibility- Requirements for house hold appliances, electric tools and similar apparatus)
-EN 60204-1:2006 (Safety of machinery – Electrical equipment of machines.)
-CEI EN 60335-1 (Specification for safety of household and similar electrical appliances);
-CEI EN 60335-2-102 (Household and similar electrical appliances. Safety. Particular requirements for gas, oil and solid-fuel burning appliances having electrical connections).
-UNI EN ISO 12100:2010 (Safety of machinery - General principles for design - Risk assessment and risk reduction);

Gas - Heavy oil burners

European directives:

-Regulation 2016/426/UE (appliances burning gaseous fuels)
-2014/35/UE (Low Tension Directive)
-2014/30/UE (Electromagnetic compatibility Directive)
-2006/42/EC (Machinery Directive)

Harmonized standards

-UNI EN 676 (Automatic forced draught burners for gaseous fuels)
-EN 55014-1 (Electromagnetic compatibility- Requirements for house hold appliances, electric tools and similar apparatus)
-EN 60204-1:2006 (Safety of machinery – Electrical equipment of machines.)
-CEI EN 60335-1 (Specification for safety of household and similar electrical appliances);
-CEI EN 60335-2-102 (Household and similar electrical appliances. Safety. Particular requirements for gas, oil and solid-fuel burning appliances having electrical connections).
-UNI EN ISO 12100:2010 (Safety of machinery - General principles for design - Risk assessment and risk reduction);

Industrial burners

European directives

-Regulation 2016/426/UE (appliances burning gaseous fuels)
-2014/35/UE (Low Tension Directive)
-2014/30/UE (Electromagnetic compatibility Directive)
-2006/42/EC (Machinery Directive)

Harmonized standards

-EN 55014-1 (Electromagnetic compatibility- Requirements for house hold appliances, electric tools and similar apparatus)
-EN 746-2 (Industrial thermoprocessing equipment - Part 2: Safety requirements for combustion and fuel handling systems)
-UNI EN ISO 12100:2010 (Safety of machinery - General principles for design - Risk assessment and risk reduction);
-EN 60204-1:2006 (Safety of machinery – Electrical equipment of machines.)
-EN 60335-2 (Electrical equipment of non-electric appliances for household and similar purposes. Safety requirements)

Burner data plate

For the following information, please refer to the data plate:

- burner type and burner model: must be reported in any communication with the supplier
- burner ID (serial number): must be reported in any communication with the supplier
- date of production (year and month)
- information about fuel type and network pressure

Type	--
Model	--
Year	--
S.Number	--
Output	--
Oil Flow	--
Fuel	--
Category	--
Gas Pressure	--
Viscosity	--
El.Supply	--
El.Consump.	--
Fan Motor	--
Protection	--
Drwaing n°	--
P.I.N.	--

SYMBOLS USED

WARNING! Failure to observe the warning may result in irreparable damage to the unit or damage to the environment

DANGER! Failure to observe the warning may result in serious injuries or death.

WARNING! Failure to observe the warning may result in electric shock with lethal consequences

Figures, illustrations and images used in this manual may differ in appearance from the actual product.

BURNER SAFETY

The burners - and the configurations described below - comply with the regulations in force regarding health, safety and the environment. For more in-depth information, refer to the declarations of conformity that are an integral part of this Manual.

DANGER! Incorrect motor rotation can seriously damage property and injure people.

Residual risks deriving from misuse and prohibitions

The burner has been built in order to make its operation safe; there are, however, residual risks.

Do not touch any mechanical moving parts with your hands or any other part of your body. Injury hazard
Do not touch any parts containing fuel (i.e. tank and pipes). Scalding hazard
Do not use the burner in situations other than the ones provided for in the data plate.
Do not use fuels other than the ones stated.
Do not use the burner in potentially explosive environments.
Do not remove or by-pass any machine safety devices.
Do not remove any protection devices or open the burner or any other component while the burner is running.
Do not disconnect any part of the burner or its components while the burner is running.
Untrained staff must not modify any linkages.

After any maintenance, it is important to restore the protection devices before restarting the machine.
All safety devices must be kept in perfect working order.
Personnel authorized to maintain the machine must always be provided with suitable protections.

ATTENTION: while running, the parts of the burner near the generator (coupling flange) are subject to overheating. Where necessary, avoid any contact risks by wearing suitable PPE.

PART I: INSTALLATION

GENERAL FEATURES

Monobloc burners of this series are made in die-cast aluminium housing with relative flange to work on heating generators. The output range is from 150kW to 1900kW (according to the model). They can be provided in progressive or fully-modulating version.

The fuel coming from the supply line, is pushed by the pump to the nozzle and then into the combustion chamber, where the mixture between fuel and air takes place and consequently the flame.

In the burners, the mixture bertween fuel and air, to perform clean and efficient combustion, is activated by atomisation of oil into very small particles. This process is achieved making pressurised oil pass through the nozzle.

The pump main function is to transfer oil from the tank to the nozzle at required quantity and pressure. To adjust pressure, pumps are provided with a pressure governor (except some models for which a separate adjusting valve is provided). Other pumps are provided with two pressure governors: one for high and one for low pressure (in double-stage systems with one nozzle).

In the double-stage burners, the electric actuator, that moves the air damper, allows the optimisation of the gas flue values, as to get an efficient combustion. The position of the combustion head determines the burner output. The air (comburent) and fuel (light oil) are forced into the combustion chamber, as to let the flame light up.

How to interpret the burner's "Performance curve"

To check if the burner is suitable for the boiler to which it must be installled, the following parameters are needed:

- furnace input, in kW or kcal/h (kW = kcal/h / 860);
- backpressure (data are available on the boiler ID plate or in the user's manual).

Example:

Furnace input: 600kW

Backpressure: 4mbar

In the "Performance curve" diagram (Fig. 1), draw a vertical line matching the furnace input value and an horizontal line matching the backpressure value. The burner is suitable if the intersection point A is inside the performance curve.

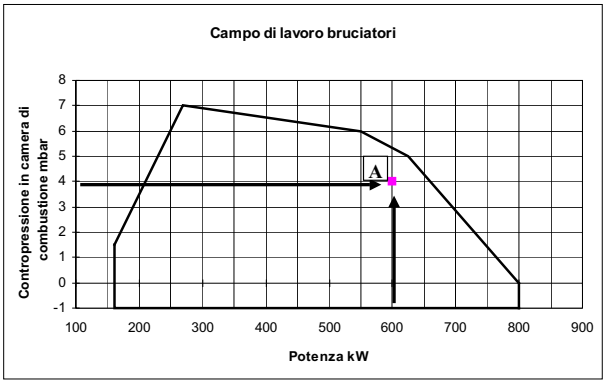

Fig. 1

Data are referred to standard conditions: atmospheric pressure at 1013mbar, ambient temperature at 15°C

Performance curves

PG60

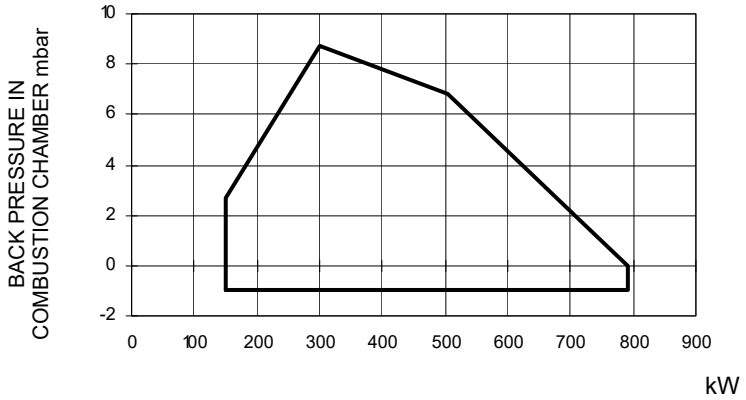

PG70

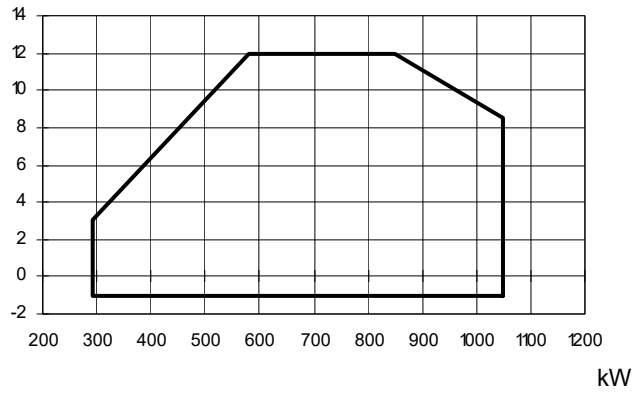

PG81

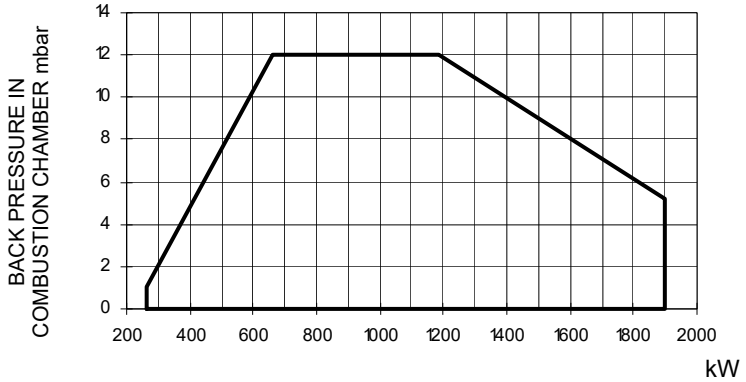

To get the input in kcal/h, multiply value in kW by 860.
Data are referred to standard conditions: atmosferic pressure at 1013mbar, ambient temperature at 15°C.

Burner model identification

Burners are identified by burner type and model. Burner model identification is described as follows.

Type **PG60** Model	**G-.**	**PR.**	**S.**	***.**	**A.**	**ES.**
(1)	(2)	(3)	(4)	(5)	(6)	(7)

(1) BURNER TYPE	**PG60-PG70-PG81**
(2) FUEL	**G -** Light oil **A -** Biodiesel
(3) OPERATION(Available versions)	**PR -** Progressive **MD -** Fully modulating
(4) BLAST TUBE	**S -** Standard **L -** Extended
(5) DESTINATION COUNTRY	* - see data plate*
(6) BURNER VERSION	**A** - Standard, **Y** - Speciale
MICRO-PROCESSOR CONTROL	**ES** = with no O_2 trim control, with no VSD control **EO** = with O_2 trim control, with no VSD control

Technical specifications

BURNERS		**PG60**	**PG70**	**PG81**
Output	min. -max. kW	151 - 791	291 - 1047	264-1900
Fuel		Light oil		
Operation		Progressive - Fully modulating		
Operating temperature	°C	-10 ÷ +50		
Storage Temperature	°C	-20 ÷ +60		
Working service*		Internittent		
Approx. weight	kg	55	85	85

Electrical data 50 Hz

Tensioni possibili, verificare l'effettiva tensione di alimentazione Trifase e Monofase sulla targa dati del bruciatore.

Power supply triphase	V	230 / 400 3 a.c.		
Auxiliary power supply Mono Phase	V	115 2 a.c. / 220 2 a.c. / 230 1N a.c.		
	Hz	**50**		
Electric motor	kW	1.1	2.2	3
Total power consumption	kW	1.6	2.7	3.5

Electrical data60 Hz

Tensioni possibili, verificare l'effettiva tensione di alimentazione Trifase e Monofase sulla targa dati del bruciatore.

Power supply triphase	V	220 / 230 / 265 / 277 / 380 / 440 / 460 / 480 / 525 3 a.c.		
Auxiliary power supply Mono Phase	V	110 / 120 / 220 / 230 2 a.c.		
	Hz	**60**		
Electric motor	kW	1,32	2,64	3,6
Total power consumption	kW	1,82	3,14	8,08

Fuel data

Light oil rate	min. -max. kg/h	13 - 67	25 - 88	22-160
Viscosity		1.3 °E @20°C		
Power supply		400V 3N ~ 50Hz		

(*) NOTE ON THE WORKING SERVICE: the control box automatically stops after 24h of continuous working. The control box immediately starts up, automatically.

Overall dimensions (mm) - PG60

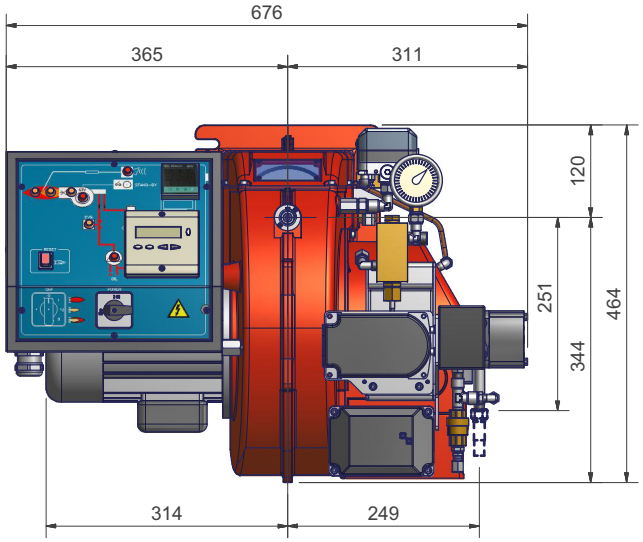

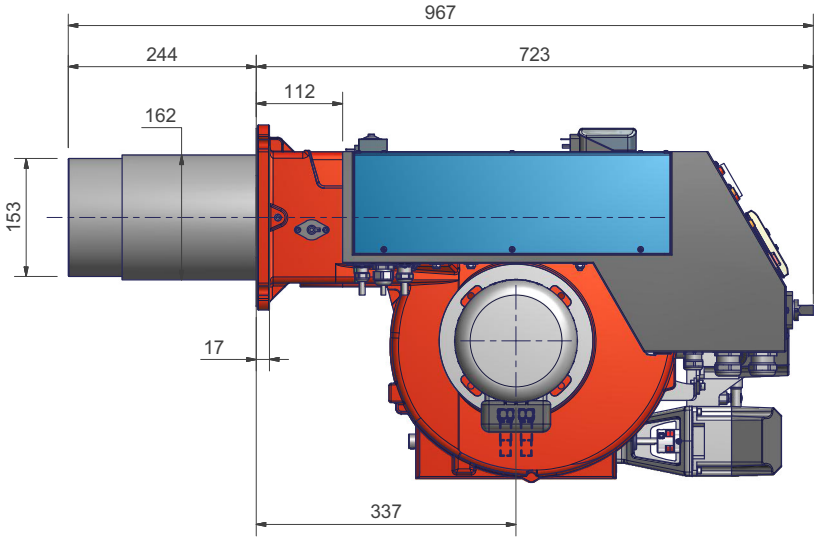

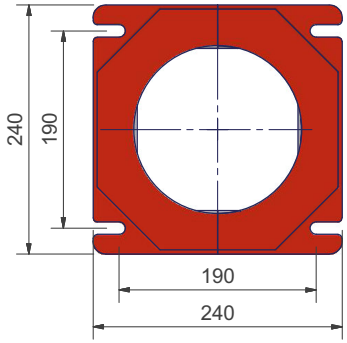

Burner flange

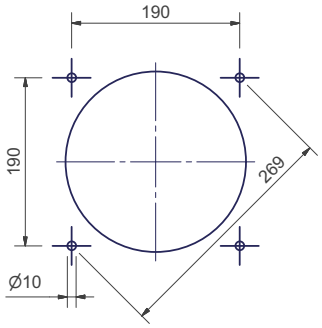

Suggested boiler drilling template

Overall dimensions (mm) - PG70, PG81

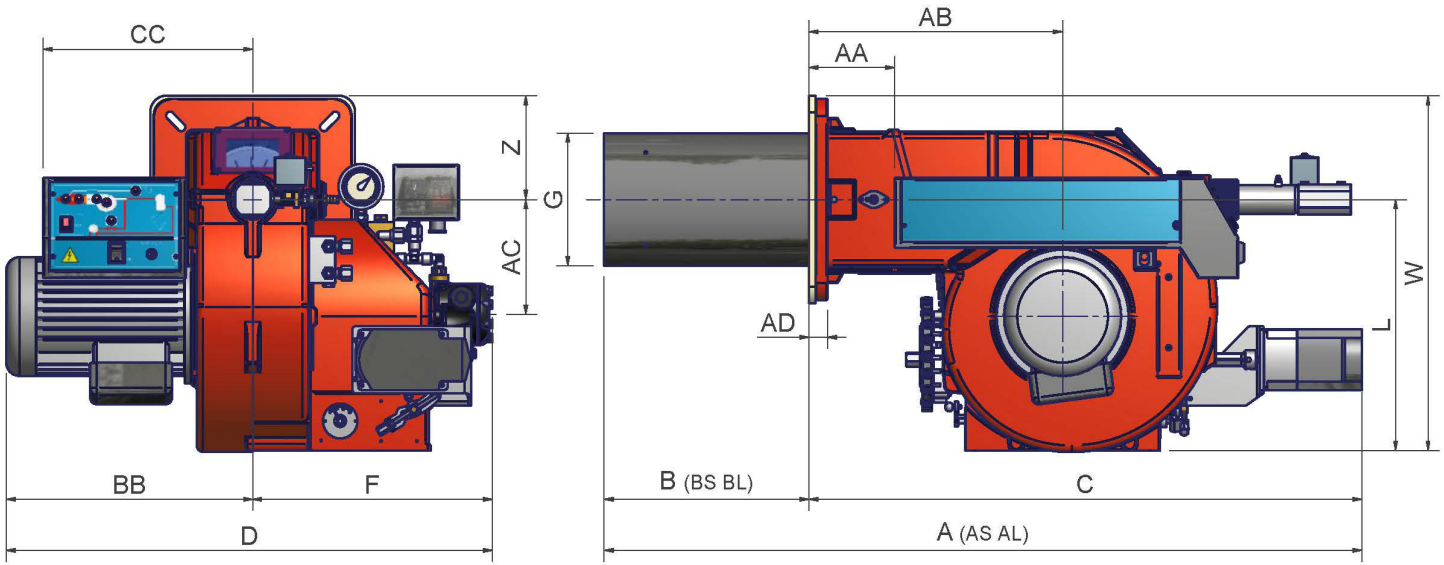

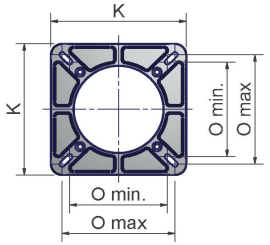

Burner flange

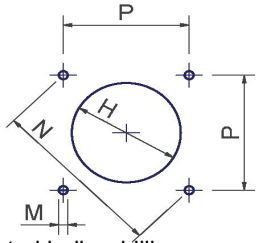

Suggested boiler drilling

	AS	AL	AA	BS	BL	BB	C	CC	D	F	G	K	H	L	Omin	Omax	P	M	N	P	W	Z
PG70	1147	1297	130	310	460	373	837	317	736	363	198	300	228	374	216	250	233	M10	330	233	529	155
PG81	1177	1327	139	340	490	373	837	382	736	363	234	300	264	376	216	250	233	M10	330	233	531	155

*B, C = measure referred to burner fitted with standard blast tube

*BL, CL = measure referred to burner fitted with extended blast tube

(PG60, PG70) HYDRAULIC DIAGRAMS

Fig. 2 - 3I2G-22 v0 **Hydraulic diagram**

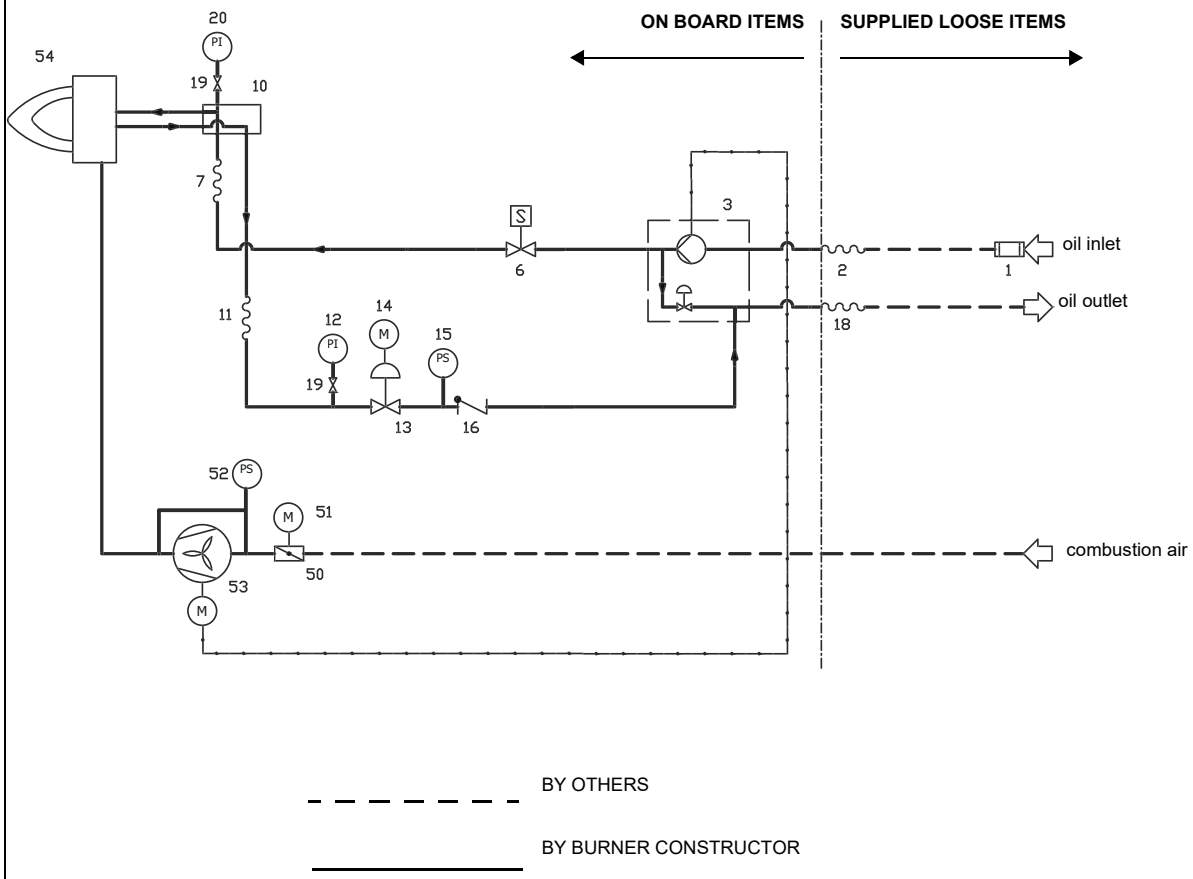

POS	OIL TRAIN
1	Filter
2	Flexible hose
3	Pump and pressure governor
6	Solenoid valve
7	Flexible hose
10	Oil distributor
11	Flexible hose
12	Pressure gauge
13	Pressure governor
14	Actuator
15	Pressure switch
16	One-way valve
18	Flexible hose
19	Manual valve
20	Pressure gauge

COMBUSTION AIR TRAIN

50	Air damper
51	Actuator
52	Pressure switch - PA
53	Draught fan with electromotor
54	Burner

NOTE: Items 7,11 are included only on certain types of burner

NOTE: The following POS are optional: 19,20

(PG81) HYDRAULIC DIAGRAMS

Fig. 3 - 3I2G-24 v0 **Hydraulic diagram**

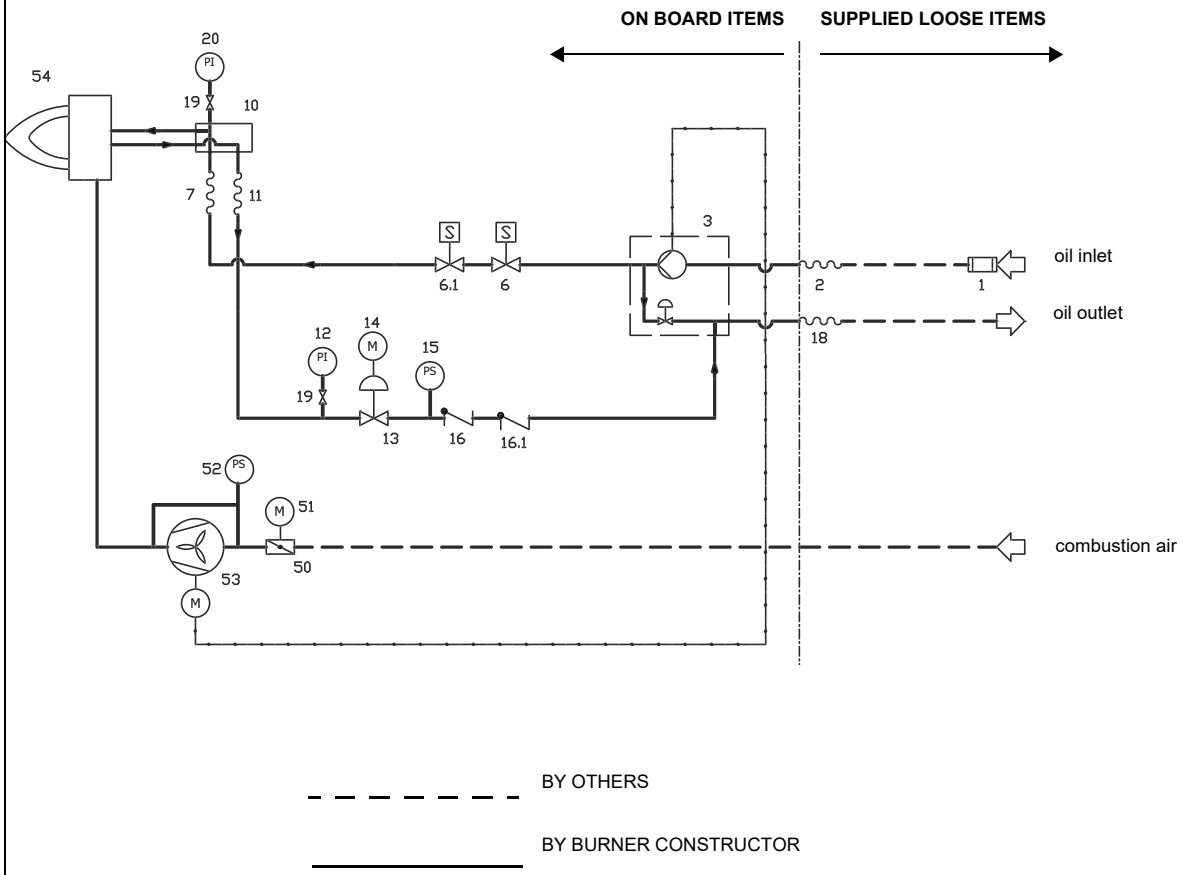

POS	OIL TRAIN
1	Filter
2	Flexible hose
3	Pump and pressure governor
6	Solenoid valve
7	Flexible hose
6.1	Solenoid valve
10	Oil distributor
11	Flexible hose
12	Pressure gauge
13	Pressure governor
14	Actuator
15	Pressure switch
16	One-way valve
16.1	One-way valve
18	Flexible hose
19	Manual valve
20	Pressure gauge
	COMBUSTION AIR TRAIN
50	Air damper
51	Actuator
52	Pressure switch - PA
53	Draught fan with electromotor
54	Burner

NOTE: The following POS are optional: 19, 20

Fig. 4

(PG81) HYDRAULIC DIAGRAMS - (version with a separate pump motor)

Fig. 5 - 3I2G-23 v0 **Hydraulic diagram**

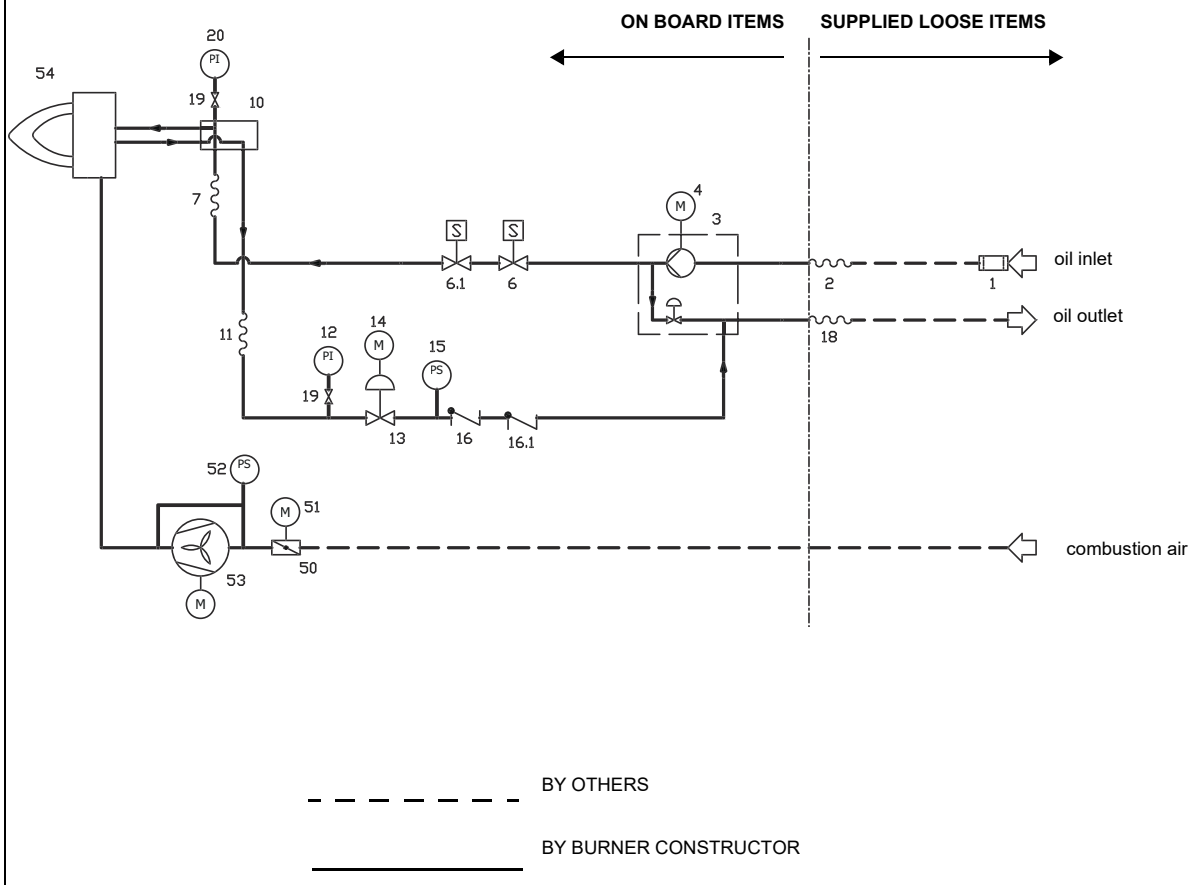

POS	OIL TRAIN
1	Filter
2	Flexible hose
3	Pump and pressure governor
4	Electrical motor
6	Solenoid valve
7	Flexible hose
6.1	Solenoid valve
10	Oil distributor
11	Flexible hose
12	Pressure gauge
13	Pressure governor
14	Actuator
15	Pressure switch
16	One-way valve
16.1	One-way valve
18	Flexible hose
19	Manual valve
20	Pressure gauge
	COMBUSTION AIR TRAIN
50	Air damper
51	Actuator
52	Pressure switch - PA
53	Draught fan with electromotor
54	Burner

NOTE: The following POS are optional: 19, 20

Fig. 6

PART II: INSTALLATION

MOUNTING AND CONNECTING THE BURNER

Packing

The burners are dispatched in wooden pakages whose dimensions are:
PG60: 1200 x 670 x 540 mm (L x P x H)
PG70-PG81: 1400 x 1000 x 220 mm (L x P x H)

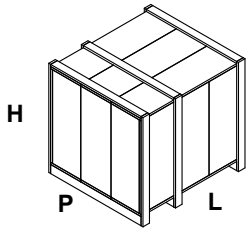

Packing cases of this kind are affected by humidity and are not suitable for stacking. The following are placed in each packing case.

1 burner;
2 light oil flexible hoses;
1 light oil filter;
1 gasket to be inserted between the burner and the boiler;
1 envelope containing this manual.

To get rid of the burner's packing, follow the procedures laid down by current laws on disposal of materials.

Fitting the burner to the boiler

To install the burner into the boiler, proceed as follows:

1 make a hole on the closing door of the combustion chamber as described on paragraph "Overall dimensions")
2 place the burner to the boiler: lift it up and handle it according to the procedure described on paragraph "Handling the burner";
3 place the stud bolts (5) on boiler's door, according to the burner drilling template described on paragraph "Overall dimensions";
4 fasten the stud bolts;
5 place the gasket on the burner flange;
6 install the burner into the boiler;
7 fix the burner to the stud bolts, by means of the fixing nuts, according to the next picture.
8 After fitting the burner to the boiler, ensure that the gap between the blast tube and the refractory lining is sealed with appropriate insulating material (ceramic fibre cord or refractory cement).

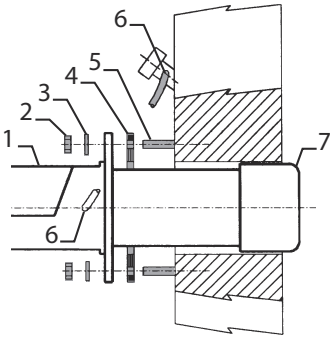

Keys

9
1 Burner
2 Fixing nut
3 Washer
4 Ceramic fibre plait
5 Stud bolt
Blast tube

Handling the burner

ATTENTION! The lhandling operations must be carried out by specialised and trained personnel. If these operations are not carried out correctly, the residual risk for the burner to overturn and fall down still persists.
To move the burner, use means suitable to support its weight (see paragraph "Technical specifications").

OIL TRAIN CONNECTIONS

Hydraulic diagrams for light oil supplying circuits

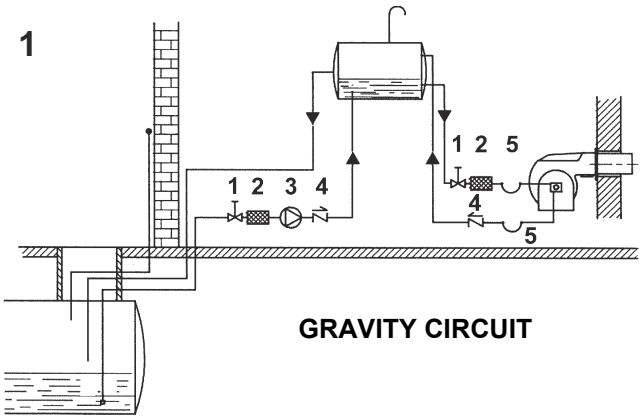

GRAVITY CIRCUIT

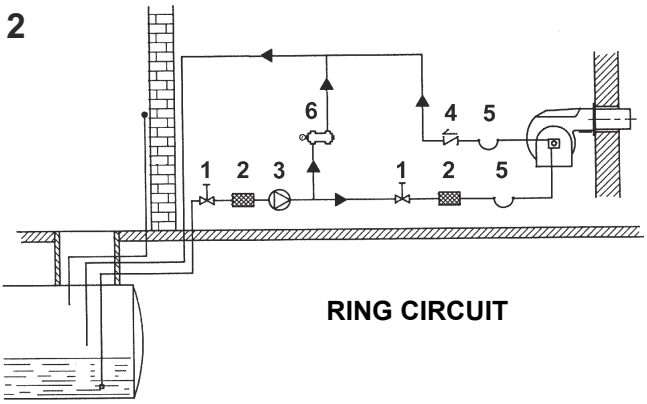

RING CIRCUIT

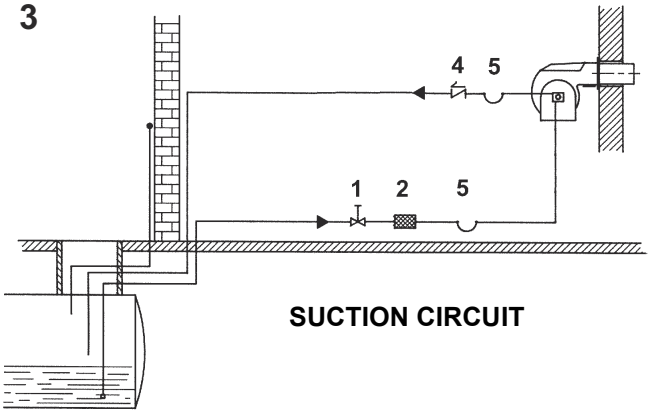

SUCTION CIRCUIT

Key

1 Manual valve
2 Light oil filter
3 Light oil feeding pump
4 One way valve
5 Flexible hoses
6 Relief valve

NOTE: in plants where gravity or ring feed systems are provided, install an automatic interception device.

NOTE: in plants where gravity or ring feed systems are provided, install an automatic interception device (see n. 4 -).

Installation diagram of light oil pipes

PLEASE READ CAREFULLY THE "WARNINGS" CHAPTER AT THE BEGINNING OF THIS MANUAL.

The burner is supplied with filter and flexible hoses, all the parts upstream the filter and downstream the return flexible hose, must be installed by the customer. As far as the hoses connection, see the related paragraph.

Double-pipe system

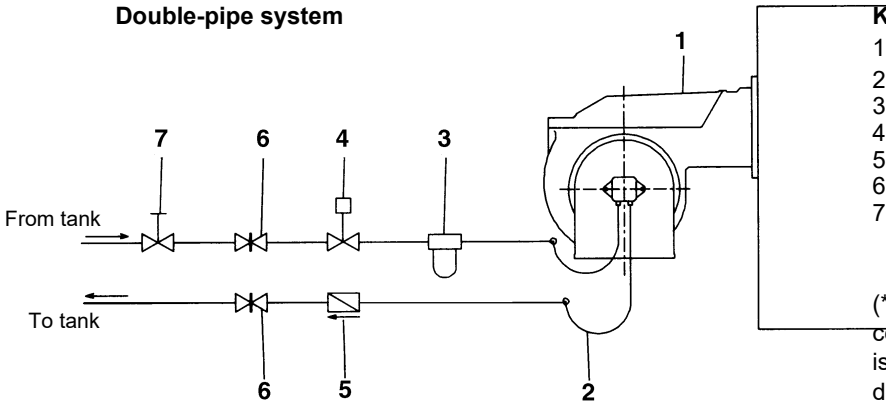

Key

1 Burner
2 Flexible hoses (fitted)
3 Light oil filter (fitted)
4 Automatic interceptor (*)
5 One-way valve (*)
6 Gate valve
7 Quick-closing gate-valve (outside the tank or boiler rooms)

(*) Only for installations with gravity, siphon or forced circulation feed systems. If the device installed is a solenoid valve, a timer must be installed to delay the valve closing.

The direct connection of the device without a timer may cause pump breaks.

The provided pumps can be installed both into single-pipe and double-pipe systems.

Single-pipe system: a single pipe drives the oil from the tank to the pump's inlet. Then, from the pump, the pressurised oil is driven to the nozzle: a part comes out from the nozzle while the othe part goes back to the pump. In this system, the by-pass pulg, if provided, must be removed and the optional return port, on the pump's body, must be sealed by steel plug and washer.

Double-pipe system: as for the single pipe system, a pipe that connects the tank to the pump's inlet is used besides another pipe that connects the pum's return port to the tank, as well. The excess of oil goes back to the tank: this installation can be considered self-bleeding. If provided, the inside by-pass plug must be installed to avoid air and fuel passing through the pump.

Burners are factory-set for double-stage systems. They can be suited for single-pipe system (recommended in the case of gravity feed) as decribed before.To change from a 1-pipe system to a 2-pipe-system, insert the by-pass plug **G** (as for ccw-rotation- referring to the pump shaft).

Caution: Changing the direction of rotation, all connections on top and side are reversed.

Suntec AJ6

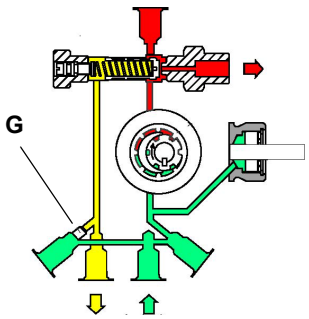

Suntec J6 / E6

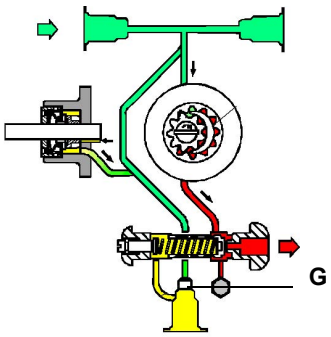

Suntec TA

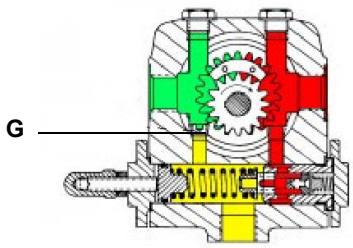

Bleed

Bleeding in two-pipe operation is automatic : it is assured by a bleed flat on the piston. In one-pipe operation, the plug of a pressure gauge port must be loosened until the air is evacuated from the system.

About the use of fuel pumps

- Make sure that the by-pass plug is not used in a single pipe installation, because the fuel unit will not function properly and damage to the pump and burner motor could result.
- Do not use fuel with additives to avoid the possible formation over time of compounds which may deposit between the gear teeth, thus obstructing them.
- After filling the tank, wait before starting the burner. This will give any suspended impurities time to deposit on the bottom of the tank, thus avoiding the possibility that they might be sucked into the pump.
- On initial commissioning a "dry" operation is foreseen for a considerable length of time (for example, when there is a long suction line to bleed). To avoid damages inject some lubrication oil into the vacuum inlet.
- Care must be taken when installing the pump not to force the pump shaft along its axis or laterally to avoid excessive wear on the joint, noise and overloading the gears.
- Pipes should not contain air pockets. Rapid attachment joint should therefore be avoided and threaded or mechanical seal junctions preferred. Junction threads, elbow joints and couplings should be sealed with removable sg component. The number of junctions should be kept to a minimum as they are a possible source of leakage.
- Do not use PTFE tape on the suction and return line pipes to avoid the possibility that particles enter circulation. These could deposit on the pump filter or the nozzle, reducing efficiency. Always use O-Rings or mechanical seal (copper or aluminium gaskets) junctions if possible.
- An external filter should always be installed in the suction line upstream of the fuel unit.

Light oil pumps

The pumps provided with these burners can be:

- PG60: Suntec AJ6 / E6
- PG70: Suntec J6
- PG81: Suntec TA2 / HP- UHE-A

PumpSuntec AJ6	
Viscosity	2.8 - 75 cSt
Oil temperature	60°C max
Inlet maximum pressure	2 bar
Inlet minimum pressure	- 0.45 bar to avoid gasing
Rated speed	3600 rpm max.

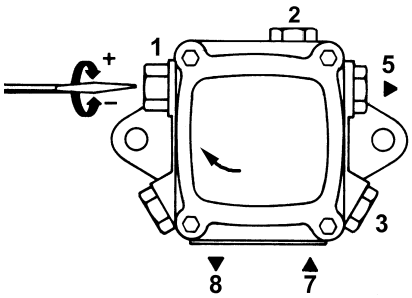

Suntec J6 - J7 1001	
Oil viscosity	2 - 75 cSt
Oil temperature	0 - 90°C
Min. suction pressure	- 0,45 barto avoid gasing
Max. suction pressure	1.5 bar
Max. return pressure	1.5 bar
Rotation speed	3600 rpm max.

Key

1 Inlet G3/4”
2 Return G3/4”
3 Nozzle outlet G1/8”
4 Pressure gauge port G1/8”
5 Vacuum gauge port G1/2”
6 Pressure adjustment

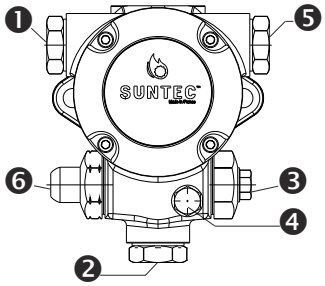

Suntec E6 - E7 1001	
Oil viscosity	3 - 75 cSt
Oil temperature	0 - 90°C
Inlet maximum pressure	1,5 bar
Maximum return pressure	1,5 bar
Minimum inlet pressure	- 0,45 to avoid gasing
Rotation speed	3600 rpm max.

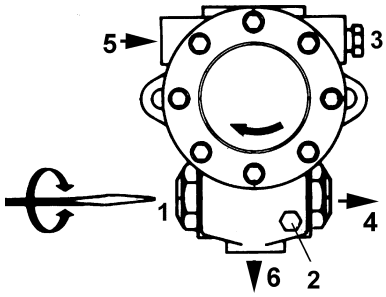

Key

1. Pressure governor
2. Pump pressure gauge
3. Vacuum gauge
5. To the nozzle
7. Inlet
8. Return

Suntec TA..	
Oil viscosity	3 ÷ 75 cSt
Oil temperature	0 ÷ 150°C
Min. suction pressure	- 0.45 bar to avoid gasing
Max. suction pressure	5 bar
Max. return pressure	5 bar
Rotation speed	3600 rpm max.

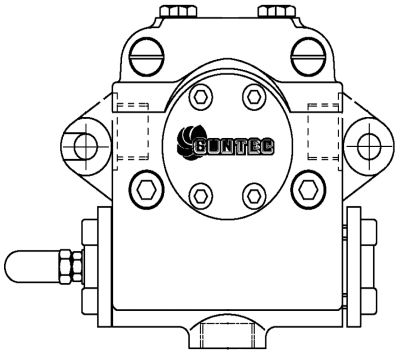

1 Inlet G1/2
2 To the nozzle G1/2
3 Return G1/2
4 Pressure gauge port G1/4
5 Vacuum gauge port G1/4
6 Pressure governor

HP-Technick UHE-A..	
Oil viscosity	3 ÷ 75 cSt
Oil temperature	0 ÷ 150°C
Min. suction pressure	- 0.45 bar to avoid gasing
Max. suction pressure	5 bar
Max. return pressure	5 bar
Rotation speed	3600 rpm max.

1. Connection for manometer 1 – delivery (M1) – G1/4
2. Connection for manometer 2 – suction (M2) – G1/4
3. Connection for manometer 3 (M3)

A. Suction connection– G1/2
D. Direct - clockwise
I. Indirect – counter clockwise
R. By-pass connection– G1/2
S. Delivery connection – G1/2
VR. After removal of cover screw: pressure regulation

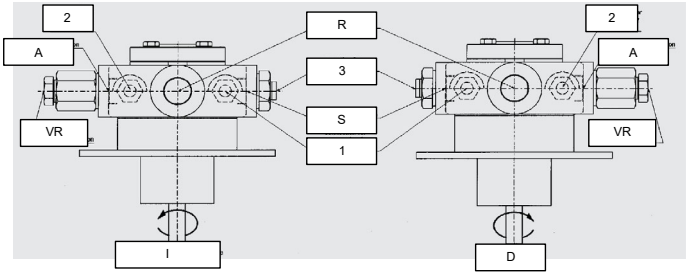

Connecting the light oil flexible hoses

To connect the flexible light oil hoses to the pump, proceed as follows, according to the pump provided:

1 remove the closing nuts **A** and **R** on the inlet and return connections of the pump;

2 screw the rotating nut of the two flexible hoses on the pump **being careful to avoid exchanging the inlet and return lines**: see the arrows marked on the pump that show the inlet and the return (see prevoius paragraph).

Suntec AJ6	Suntec J6 / E6
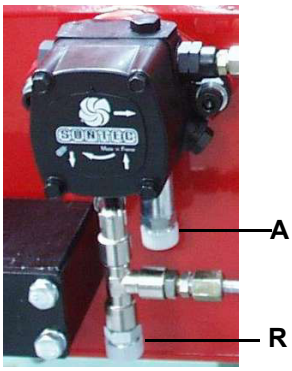	
Suntec TA	**HP Technik UHE-A**
	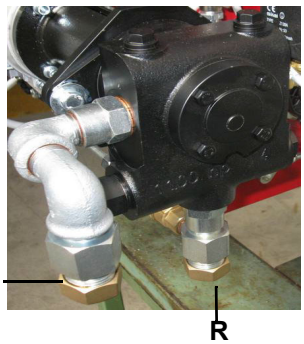

Light oil nozzles

The light oil flow rate can be adjusted choosing a by-pass nozzle that suits the boiler/utilisation's output and setting the delivery and return pressure values according to the values quoted on diagram on Fig. 7.

NOZZLE	NOZZLE SUPPLY PRESSURE bar	HIGH FLAME RETURN PRESSURE bar	LOW FLAME RETURN PRESSURE bar (recommended)
BERGONZO A3	20	11 ÷ 13	5 (recommended)

Example: if a 220kg/h flow rate BERGONZO nozzle is provided, set the return pressure at 11bar, supply at 20bar on the delivery to get a 220kg/h flow rate. If the return pressure needed is 5bar, instead, act on the **V** adjusting screw on the pressure governor. The flow rate will then be about 95kg/h (see the example showed on the Bergonzo diagram).

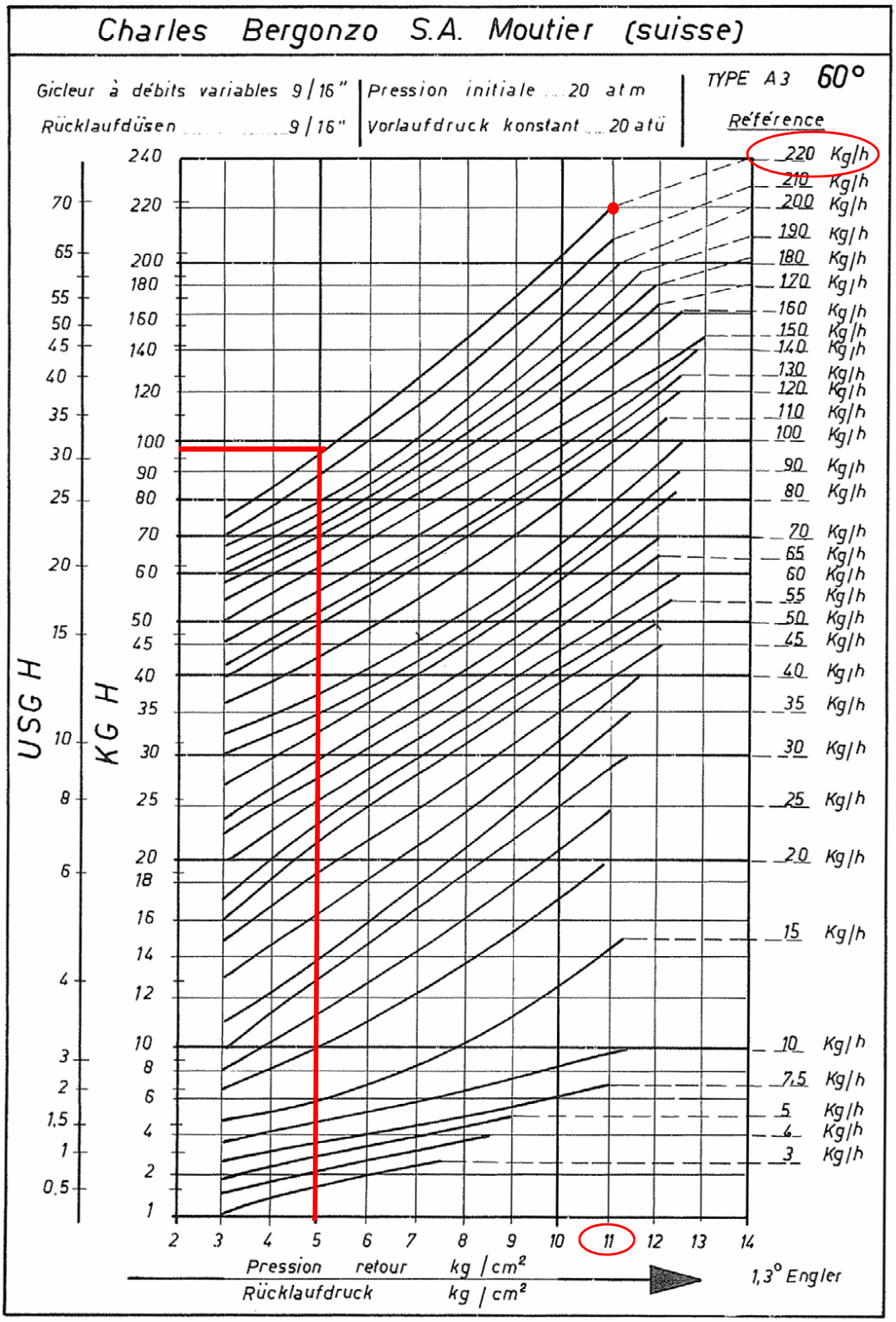

Fig. 7

FLUIDICS KW3...60°

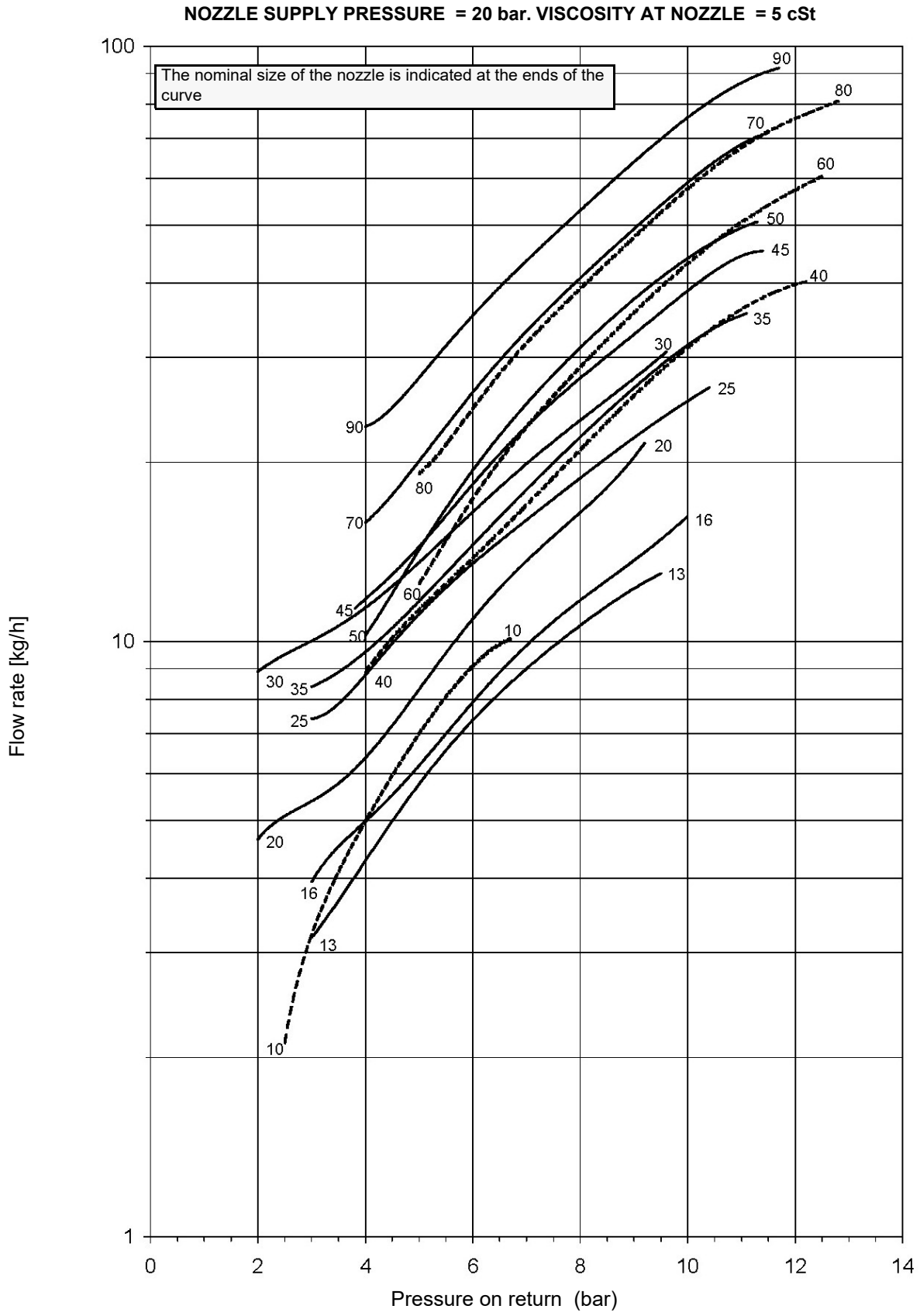

FLUIDICS KW3...60°

NOZZLE SUPPLY PRESSURE = 20 bar. VISCOSITY AT NOZZLE = 5 cS

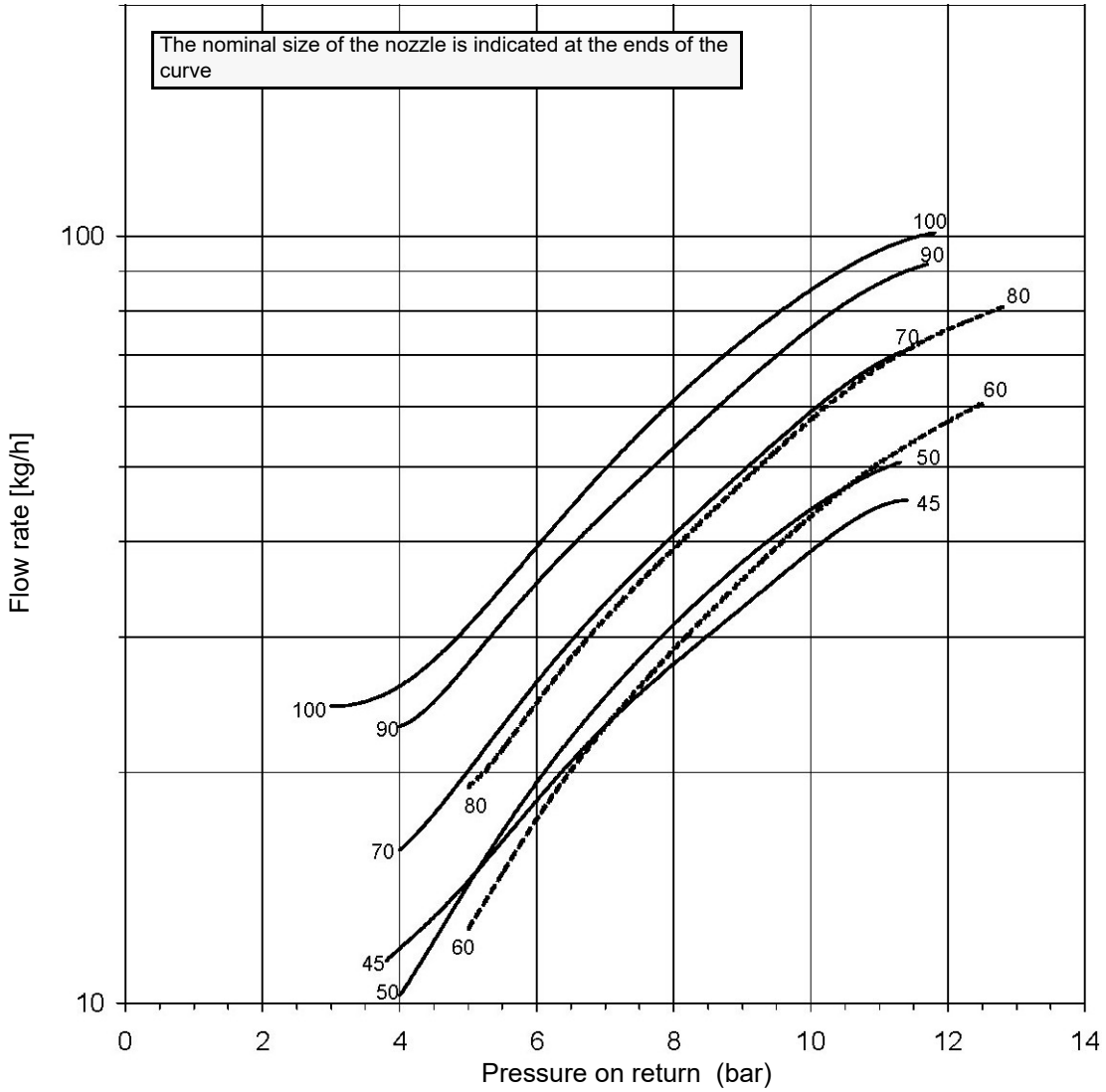

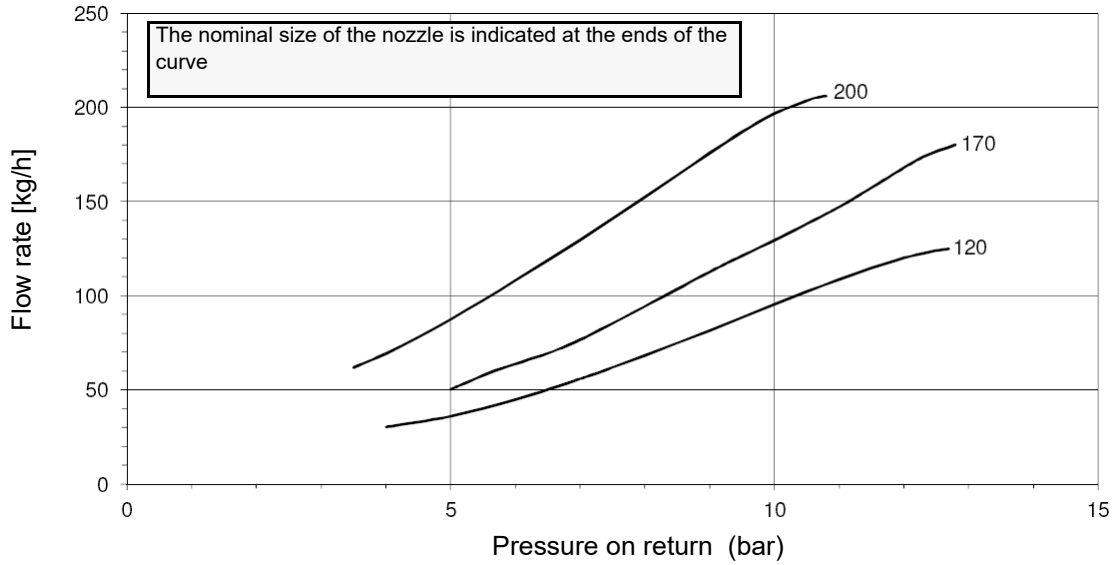

FLUIDICS KW3...60°

NOZZLE SUPPLY PRESSURE = 20 bar. VISCOSITY AT NOZZLE = 5 cSt

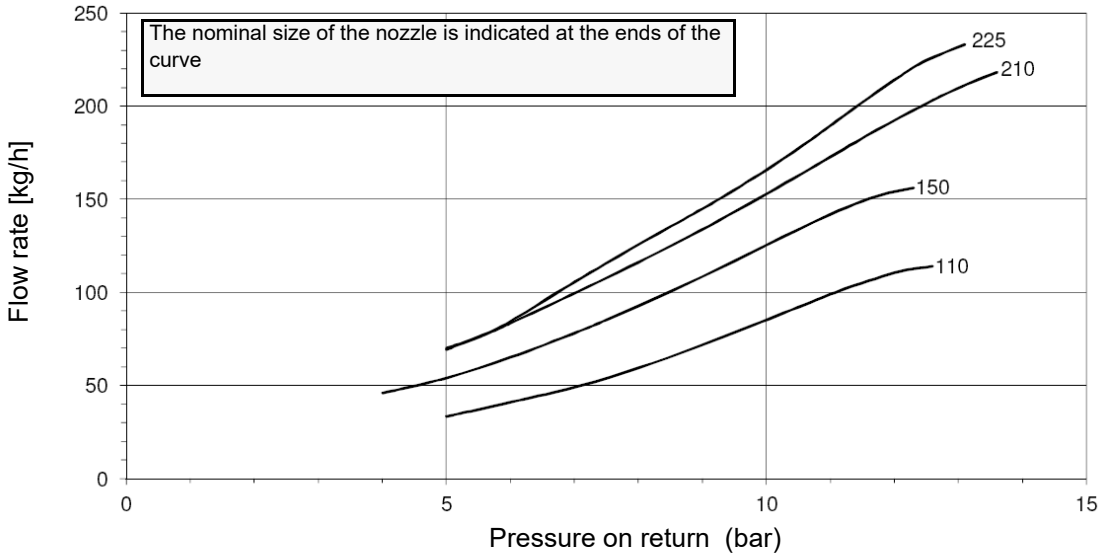

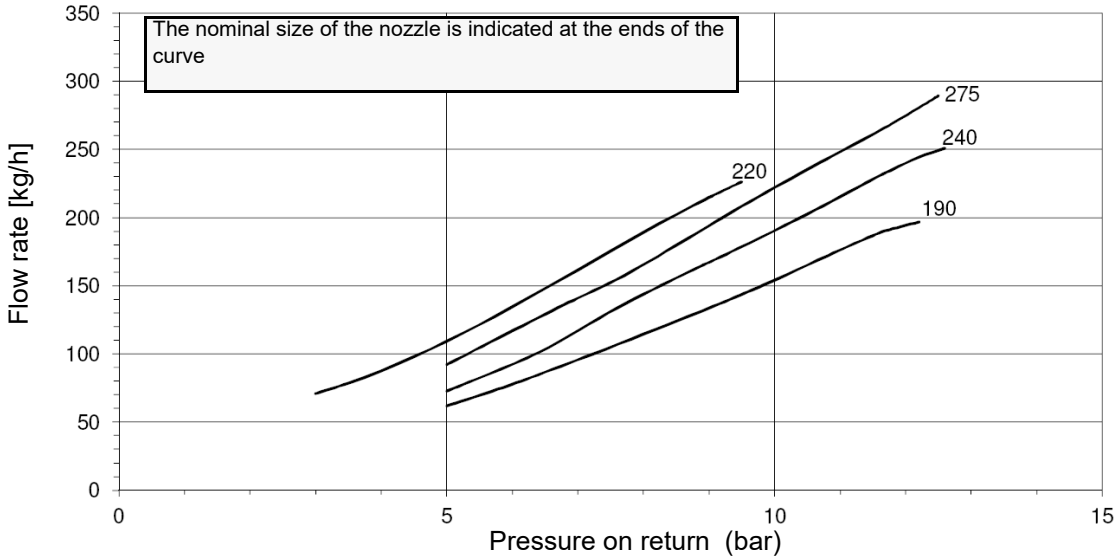

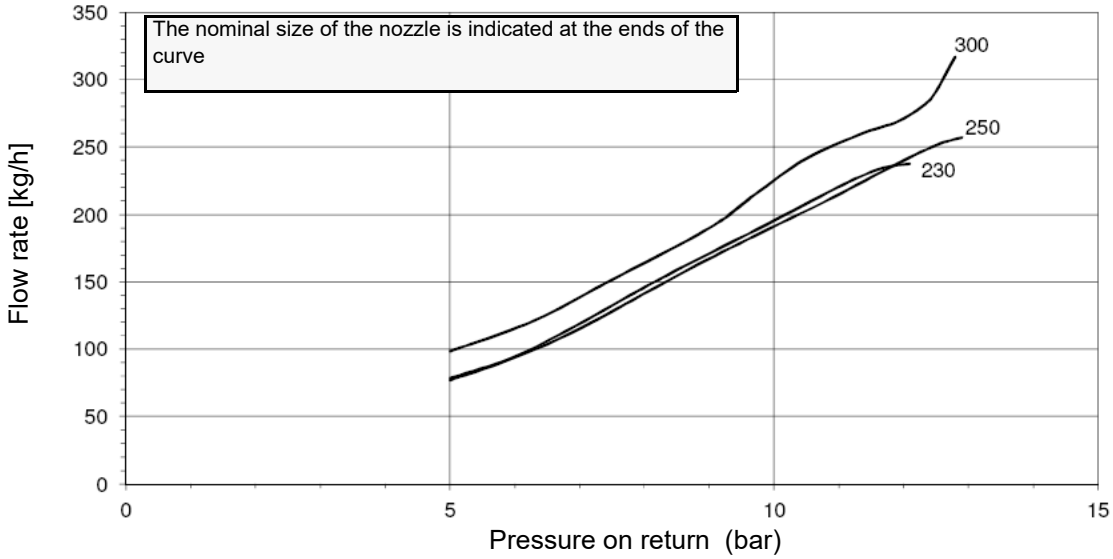

ELECTRICAL CONNECTIONS

WARNING! Respect the basic safety rules. make sure of the connection to the earthing system. do not reverse the phase and neutral connections. fit a differential thermal magnet switch adequate for connection to the mains.

WARNING! before executing the electrical connections, pay attention to turn the plant's switch to OFF and be sure that the burner's main switch is in 0 position (OFF) too. Read carefully the chapter "WARNINGS", and the "Electrical connections" section.

ATTENTION: Connecting electrical supply wires to the burner teminal block MA, be sure that the ground wire is longer than phase and neutral ones.

To execute the electrical connections, proceed as follows:

1 remove the cover from the electrical board, unscrewing the fixing screws;
2 execute the electrical connections to the supply terminal board as shown in the attached wiring diagrams;
3 check the direction of the fan motor (see next paragraph);
1 refit the panel cover.

WARNING: (only for double stage and progressive burners) The burner is provided with an electrical bridge between terminals 6 and 7; when connecting the high/low flame thermostat, remove this bridge before connecting the thermostat.

Rotation of electric motor

Once the electrical connection of the burner is executed, remember to check the rotation of the electric motor. The motor should rotate according to the "arrow" symbol on the body. In the event of wrong rotation, reverse the three-phase supply and check again the rotation of the motor.

CAUTION: check the motor thermal cut-out adjustment

NOTE: the burners are supplied for three-phase 380/400/415/480 V supply, and in the case of three-phase 220/230/240 V supply it is necessary to modify the electrical connections into the terminal box of the electric motor and replace the overload tripped relay.

Note on electrical supply

In the case where the power supply of the AUXILIARIES of the phase-phase burner (without a neutral), for the flame detection it is necessary to connect the RC circuit Siemens between the terminal 2 (terminal X3-04-4 in case of LMV2x, LMV3x, LMV5x, LME7x) of the base and the earth terminal, RC466890660. For LMV5 control box, please refer to the clabeling recommendations avaible on the Siemens CD attached to the burner

Key

C - Capacitor (22 nF , 250 V)
LME / LMV - Siemens control box
R - Resistor (1 MΩ)
M: Terminal 2 (LGB, LME), Terminal X3-04-4 (LMV2x, LMV3x, LMV5, LME7x)
RC466890660 - RC Siemens filter

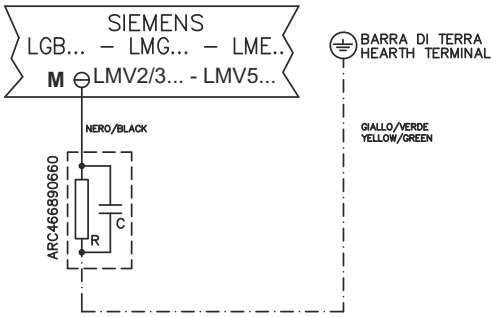

PART III: OPERATION

LIMITATIONS OF USE

THE BURNER IS AN APPLIANCE DESIGNED AND CONSTRUCTED TO OPERATE ONLY AFTER BEING CORRECTLY CONNECTED TO A HEAT GENERATOR (E.G. BOILER, HOT AIR GENERATOR, FURNACE, ETC.), ANY OTHER USE IS TO BE CONSIDERED IMPROPER AND THEREFORE DANGEROUS.

THE USER MUST GUARANTEE THE CORRECT FITTING OF THE APPLIANCE, ENTRUSTING THE INSTALLATION OF IT TO QUALIFIED PERSONNEL AND HAVING THE FIRST COMMISSIONING OF IT CARRIED OUT BY A SERVICE CENTRE AUTHORISED BY THE COMPANY MANUFACTURING THE BURNER.

A FUNDAMENTAL FACTOR IN THIS RESPECT IS THE ELECTRICAL CONNECTION TO THE GENERATOR'S CONTROL AND SAFETY UNITS (CONTROL THERMOSTAT, SAFETY, ETC.) WHICH GUARANTEES CORRECT AND SAFE FUNCTIONING OF THE BURNER.

THEREFORE, ANY OPERATION OF THE APPLIANCE MUST BE PREVENTED WHICH DEPARTS FROM THE INSTALLATION OPERATIONS OR WHICH HAPPENS AFTER TOTAL OR PARTIAL TAMPERING WITH THESE (E.G. DISCONNECTION, EVEN PARTIAL, OF THE ELECTRICAL LEADS, OPENING THE GENERATOR DOOR, DISMANTLING OF PART OF THE BURNER).

NEVER OPEN OR DISMANTLE ANY COMPONENT OF THE MACHINE EXCEPT FOR ITS MAINTENANCE.

TO SECURE THE MACHINE, ACT ON THE ISOLATOR SWITCH. IN CASE OF ANOMALIES THAT REQUIRED A SHUT DOWN OF THE BURNER, IT'S POSSIBLE TO ACT ON THE AUXILIARY LINE SWITCH, LOCATED ON THE BURNER FRONT PANEL.

IN CASE OF A BURNER SHUT-DOWN, RESET THE CONTROL BOX BY MEANS OF THE RESET PUSHBUTTON. IF A SECOND SHUT-DOWN TAKES PLACE, CALL THE TECHNICAL SERVICE, WITHOUT TRYING TO RESET FURTHER.

WARNING: DURING NORMAL OPERATION THE PARTS OF THE BURNER NEAREST TO THE GENERATOR (COUPLING FLANGE) CAN BECOME VERY HOT, AVOID TOUCHING THEM SO AS NOT TO GET BURNT.

Burner control panel

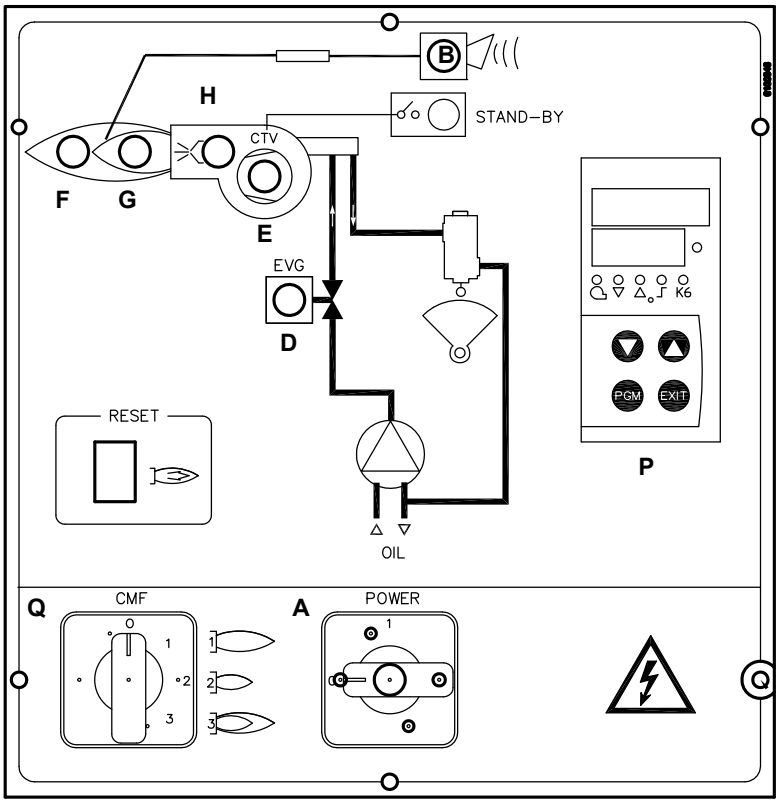

Keys

A ON-OFF main switch
B Lockout signalling lamp
D Signalling lamp for light oil solenoid valve opening
E Thermal cutout intervention signalling lamp
F High flame operation signalling lamp
G Low flame operation signalling lamp
H Ignition transformer operation signalling lamp
P Siemens modulator (only modulating burners)
Q Manual operation mode switch
R AZLx

Adjustments - brief description

ATTENTION: During commissioning operations, do not let the burner operate with insufficient air flow (danger of formation of carbon monoxide); if this should happen, make the gas decrease slowly until the normal combustion values are achieved.

Before starting up the burner, make sure that the return pipe to the tank is not obstructed. Any obstruction would cause the pump seal to break.

ATTENTION: **before starting the burner up, be sure that the manual cutoff valves are open. Be sure that the mains switch is closed.**

IMPORTANT! the combustion air excess must be adjusted according to the in the following chart:

Recommended combustion parameters		
Fuel	Recommended (%) CO_2	Recommended (%) O_2
Light oil	11.5 ÷ 13	2.9 ÷ 4.9

Adjustments - brief description

The air and fuel rates adjustments must be performed at the maximum ouptput first ("high flame"): see the LMV5.. related manual..

- Check that the combustion parameters are in the suggested limits.
- Then, adjust the combustion values by setting the "fuel/air" ratio" curvepoints (see the LMV5.. related manual).
- Set, now, the low flame output, in order to avoid the low flame output increasing too much or that the flues temperature gets too low to cause condensation in the chimney.

Adjusting procedure

Go on adjusting the burner.

Users can set only the LMV parameters that can be accessed without password: (see "Adjusting the temperature set-point").

The Siemens AZL User Interface allows programming the Siemens LMV system and monitoring the system data.

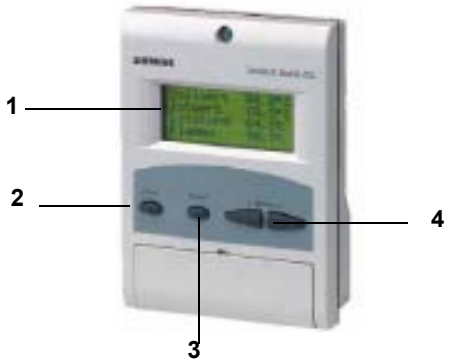

The user interface is made of:

1. display: it showes menus and parameters
2. ESC key (previous level): it goes back to the prevoius level menu or exits the programming mode without changing data.
3. ENTER key (next level): it confirms the data changing and jumps to the next menu/parameter.
4. SELECT keys: they select a menu item and change the parameter values.

As far as the settings, see the LMV5 related manual.

By following the "air/gas ratio" curvepoints setting procedure on the LMV5.. manual, adjusting the air and gas flow rates: check, continuosly, the flue gas analisys, as to avoid combustion with little air; dose the air according to the gas flow rate change following the steps quoted below.

Once the throttle valve is completely opened, acting on the pressure stabiliser of the valves group, adjust the **gas flow rate in the high flame stage** as to meet the values requested by the boiler/utilisation:

Start-up procedure

1 Turn the burner on.

2 the LMV control box starts the system test cycle: the AZL display shows the **System Test** message; at the end of the test, it shows the main page and the system stops (the safety chain is open) waiting for the startup enabling signal (standby - Program phase no. 12)

Setpoint	80°C
Act.value	78°C
Fuel	GAS
Standby	12

Main page

3 check the fan motor rotation (see related paragraph).

4 make the safety chain enabling the system to start up

5 the combustion cycle starts: the system will show the operating stages

- Prepurging (program phase no.30)
- Driving to ignition position (program phase no.36)
- Ignition position (program phase no.38)
- Fuel (the fuel solenoid valves open)

- Flame (the flame lights up)
- Driving to low flame (the actuator drives to low flame).
NOTE: the **C** and **A**, on the .
Once the ignition cycle ends, the main page is shown:

Setpoint	80°C
Act.value	78°C
Load	24%
Flame	60%

Main page

Set point: temperature set-point
Act value: actual temperature value
Load: load percentage (burner output)
Flame: percentage of flame detection current.
By pressing the ENTER key the display shows the second page:

Fuel	0.0	Air	1.8
Ax		VSD	0.0
Ax		O2	
Ax		Ld.	0.0

Second page

Fuel: it shows (in degrees) the fuel actuator position.
Air: it shows (in degrees) the air actuator position.
Ax1..3: auxiliaries.
VSD: % value on the inverter maximum frequency
O2: oxygen percentage
Ld: load percentage (burner output).

Press the ENTER key to go back to the main page.
To access the **main menu**, from the main page, press the ESC key tiwce:

OperationalStat
Operation
ManualOperation
Params & Display

Main menu

By pressing the ESC key once, the ***Operational Status*** (first item in the main menu) menu is directly shown:

Normal operation
Status/Reset
Fault History
Lockout History

the ***Operational Status*** menu provides the following items:
Normal operation: by selecting this item and pressing the ENTER key, the main page is showed; press ESC to go back to the main menu.
Status/Reset: it shows system errors or faults occuring / it represents the lockout reset function.
Fault History: by selecting this item and pressing the ENTER key, the Lockout History will be showed about the last 21 faults occured.
Lockout History: by selecting this item and pressing the ENTER key, the Lockout History will be showed about the last 9 lockouts occured, and the related date and hour.
Alarm act/deact: enable/disable the horn in case of alarm.

Fault History

To visualise the **Fault History**, select it and press the ENTER key. The message will be as:

1 Class:			05Gas
code	BF	Phase:	10
Diag.:	00	Lod:	0.0
Start No.			88

alternating by an error message as:

O2 control and
limiter automat
deactivated

To see the other Fault History pages, press the arrow keys.
To exit the Fault History pages, press ESC.

Lockout History

To visualise the **Lockout History**, choose the related item and press ENTER. The message will be:

1	10.08.07		13.47
C:71	D:00	F:	12
Start No.			88
Load	0.0		Gas

alternating by an error message as:

No flame at end
of safety time

To see the other Lockout History pages, press the arrow keys.
To exit the Lockout History pages, press ESC.

Setting the temperature/pressure set-point value

To set the temperature/pressure set-point value, that is the generator operating temperature/pressure; proceed as follows.

From the main page, enter the main menu by pressing the ESC key twice:

OperationalStat
Operation
ManualOperation
Params & Display

by means of the arrow keys, select “Params&Display”, press ENTER: the system will ask you to enter the proper password

Access w-out PW
Access Serv
Access OEM
Access LS

by means of the arrow keys, select “Access w-out pass” (access without password - user level), confirm by pressing ENTER.
The other levels require password reserved to the Technical Service, to the Manifacurer, etc.
The menu shown accessing without password is the following:

BurnerControl
RatioControl
O2Contr./Guard.
LoadController

Choose “LoadController” and press ENTER: the following menu is shown:

ControllerParam
Configuration
Adaption
SW Version

Choose “ControllerParam” and press ENTER: the following menu is shown:

ContrlParamList
MinActuatorStep
SW_FilterTmeCon
SetPointW1

Choose “**SetPointW1**” and press ENTER:

SetpointW1	
Curr:	90°
New:	90°

Curr: it shows the current set-point; use the arrows keys to change.

NOTE: the availabel range for this parameter depends on the probe provided; the unit measure of the detected value and its limits are bound up with parameters set at the “Service” level.

Once the new set-point is set, confirm by pressing ENTER, otherwise exit without changings by pressing ESC.

Press ESC to exit the set-point programming mode.

Once the temperature set-point W1 is imposed, set the Switch-on (SDon) and the Switch-off (SDoff) point of the 2-position controller:

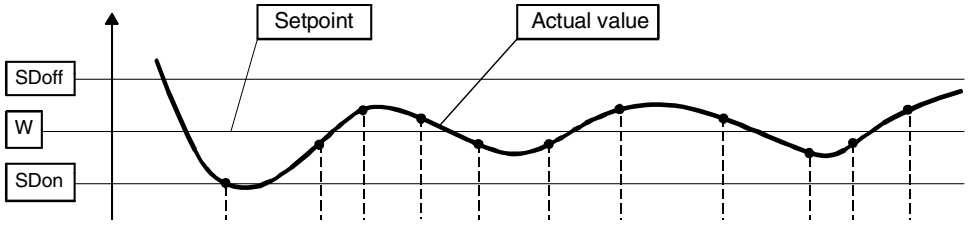

To set these values, select the item SD_ModOn (SDOn), by scrolling down the “Load controller” menu with the arrow keys and press ENTER:

SetpointW1
SetpointW2
SD_ModOn
SD_ModOff

the display will show:

SD_ModOn	
Curr::	1.0%
New:	1.0%

The deafult value for this parameter is1% that is, the burner will light again at a temperature 1% lower than the set-point. Change value,

if needed, by means of the arrow keys; press ENTER to confirm and the press ESC to exit. Press only ESC to exit without changing.
Now choose SD_ModOff always scrolling down theLoad Controller menu, by menas of the arrow keys, and press ENTER.

SetpointW1
SetpointW2
SD_ModOn
SD_ModOff

the display will show:

SD_ModOff	
Curr::	10.0%
New:	10.0%

The deafult value for this parameter is10% that is, the burner will turn off at a temperature 1% higher than the set-point.
Change value, if needed, by means of the arrow keys; press ENTER to confirm and the press ESC to exit. Press only ESC to exit without changing. Press the ESC key until the following menu is shown:

BurnerControl
RatioControl
O2Contr./Guard.
LoadController

scroll this menu down until the tiem “AZL” is reached

LoadController
AZL
Actuators
VSD Module

confirm by pressing ENTER:

Times
Languages
DateFormat
PhysicalUnits

Times: it sets the “Summer (SUM) Time / Winter (WIN) Time” operation and the continent (EU - Europe; US - United States)

Sum/Winter Time
Time EU/US

choose the Summertime/Wintertime mode desired and cofirm by pressing ENTER; press ESC to exit. Set the time zone (Time EU/US) in the same way.

Languages: it allows setting the current language

Language	
Curr::	Italiano
New:	English

choose the desired language and cofirm by pressing ENTER; press ESC to exit.

DateFormat: it allows setting the date format as DD-MM-YY (day-month-year) or MM-DD-YY (month-day-year)

DateFormat	
Curr::	DD-MM-YY
New:	MM-DD-YY

choose the desired format and cofirm by pressing ENTER; press ESC to exit.
PhysicalUnits: it allows setting the measuring units for temperature and pressure

UnitTemperature
UnitPressure

Settable temperature units: °C or °F
Settable pressure units: bar or psi.

- choose the desired unit and cofirm by pressing ENTER; press ESC to exit.
- choose the temperature and pressure unit and cofirm by pressing ENTER; press ESC to exit.

System lockout

If the system locks out, the following message will appear:

1	10.08.07		13.47
C:71	D:00	F:	12
Start No.			88
Load	0.0		Gas

call the Technical Service and tell the message data.

Cold start thermal shock (CSTP)

If the generator cannot suffer thermal shocks, the CSTP (Cold Start Thermal Schock) function can be enabled. This function is already set by the Technical service (access by reserved password).

if this function is enabled, when the burner starts upthe “Thermal shock protection activated” message will be showed.

If this function is not enabled, after startup, the burner will rapidly increase the load according to the requested value and, if necessary, to the maximum output.

Manual mode

To by-pass the thermal protection or not to let the buner operate in high flame stage (maximum output) after ignition, the manual mode is provided.

To choose the manual mode (Manual Operation), use the SELECT arrow keys

OperationalStat
Operation
ManualOperation
Params & Display

Items to be set are the following:

SetLoad
Autom/Manual/Off

SetLoad: to set the required load percentage

SetLoad	
Curr::	0.0%
New:	20.0%

set the required percentage and confirm by pressing ENTER; press ESC to exit.
choose “Autom/Manual/Off

SetLoad
Autom/Manual/Off

Autom/Manual/Off	
Curr::	Automatic
New:	Burner On

three modes are provided:
Automatic: automatic operation
Burner on: manual operation
Burner off: burner in stand-by
If the BurnerOn mode is choosen,the burner does not follow the modulator and probe settings, but operates at the set load.

Caution: if BurnerOff mode is selected, the burner stays in stand-by.
Caution: in the BurnerOn mode, the safety thresholds are set by the Technical Service.

For further details, see the LMV5x annexed manuals.

Adjustment procedure for light oil operation

1 Open the electrical panel to check the motor rotation and act directly on its contactor (see next picture): keep pressed until the oil circuit is charged.

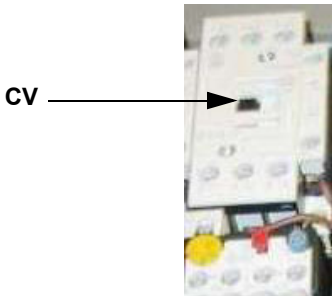

2 bleed the air from the **M** pressure gauge port (Fig. 8) by loosing the cap without removing it, then release the contactor.

Suntec AJ6	Suntec J6 /E6

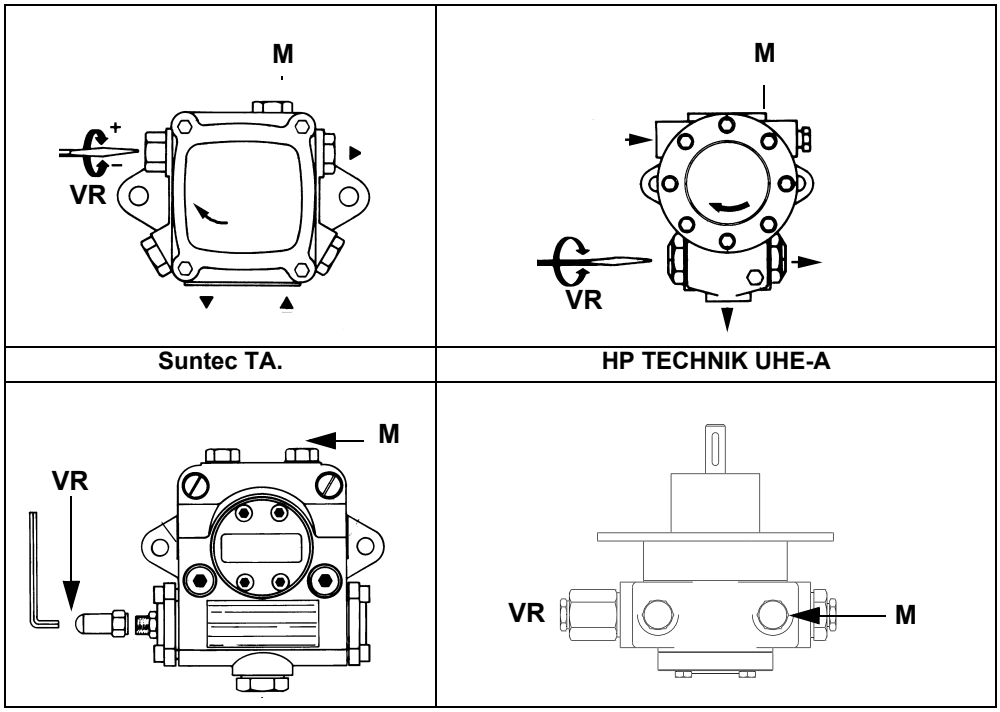

Fig. 8

3 As for setting the fuel/air ratio curve, see the LMV related manual.

4 Fig. 9 Fig. 10the nozzle supply pressure is already factory-set and must not be changed. Only if necessary, adjust the supply pressure as follows (see related paragraph);insert a pressure gauge into the port shown on Fig. 9-Fig. 10 and act on on the pump adjusting screw **VR** (see Fig. 8) as to get the nozzle pressure at 20bar (Bergonzo nozzles - see diagram on Fig. 7).

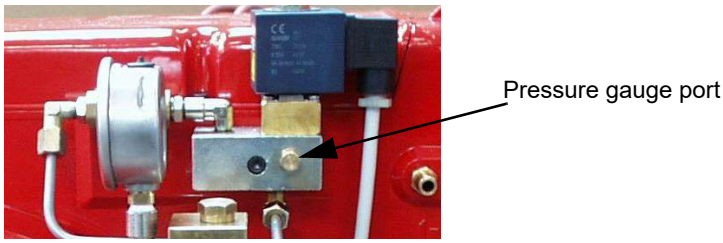

Fig. 9 - Light oil manifold
(PG60)

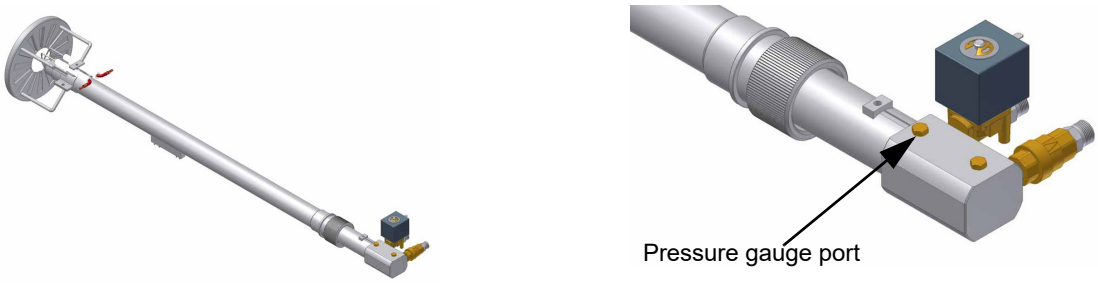

Fig. 10 - Combustion head with light oil gun
(PG70 - PG81)

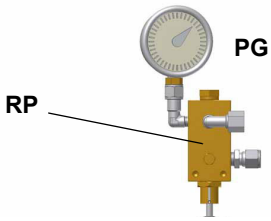

Fig. 11

5 in order to get the maximum oil flow rate, adjust the pressure (reading its value on the **PG** pressure gauge): checking always the combu-

stion parameters

6 The burner is factory-set with the head in its MAX position (maximum output).

PG60:

To let the burner operate at a lower output, turn clockwise the **VRT** screw and move progressively the combustion head back towards the MIN position.

PG70-PG81:

To let the burner operate at a lower output, loose the **VB** screw and move progressively the combustion head back towards the MIN position, by turning clockwise the **VRT** ring nut. Fasten **VB** screw when the adjustment is accomplished.

PG60

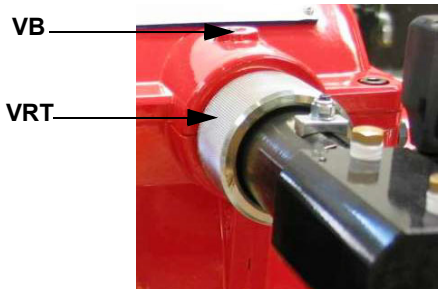

PG70-PG81

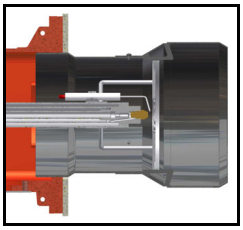

"MIN" position

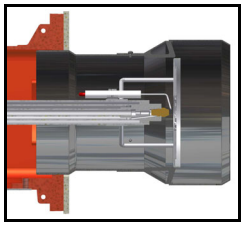

"MAX" position

Attention! if it is necessary to change the head position, repeat the air and gas adjustments described above.

Turn the burner off; then start it up again. If the adjustment is not correct, repeat the previous steps.

Maximum oil pressure switch

The oil pressure switch on the return line, checks that the pressure does not exceed a default value. This value must not be higher than the maximum acceptable pressure on the return line (this value is reported on the specification table). A pressure change on the return line could affect the combustion parameters: for this reason, the pressure switch must be set, say, at 20% over the pressure recorded during the combustion adjustment. The factory setting is 4 bar.

It is recommended to verify that the combustion parameters are within the range of acceptable values even against a pressure variation that gets close to the limit of the pressure switch.

This check should be carried out along the whole range of the burner output.

In case of inacceptable values, reduce from 20% to 15% the overpressure; later on, repeat the adjustments described above.

Minimum oil pressure switch (when provided)

The minimum oil pressure switch on the inlet line, checks that the pressure does not drop below a default value. The pressure switch must be set, say, at 10% under the pressure at the nozzle.

Oil pressure switch adjustment

Follow the below instruction, according to the pressure switch installed.

Trafag Picostat 9B4..

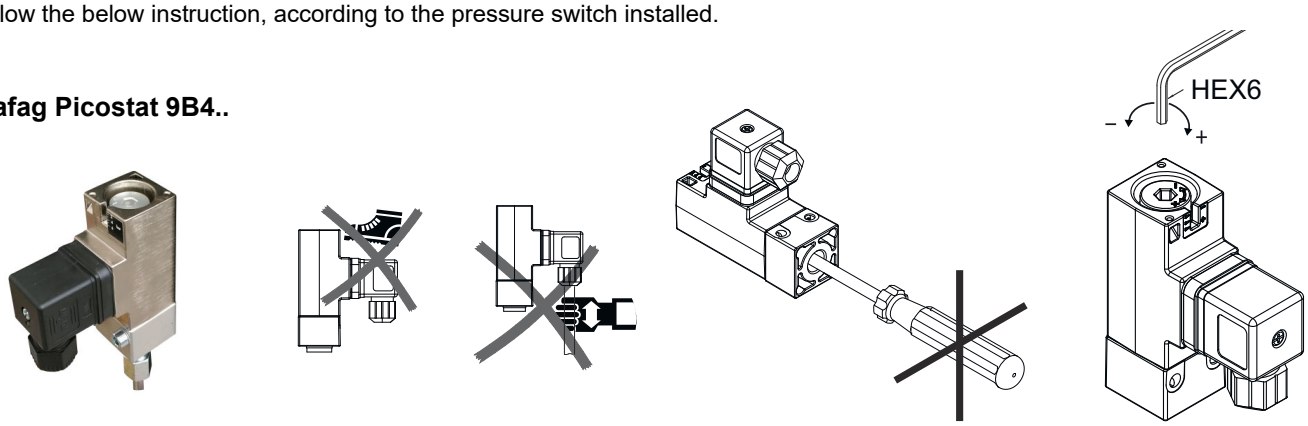

Fig. 12

Fully-modulating burners

To adjust the fully-modulating burners, use the **CMF** switch on the burner control panel (see next picture), instead of the **TAB** thermostat as described on the previous paragraphs about the progressive burners. Go on adjusting the burner as described before, paying attention to use the CMF switch intead of **TAB**.

The **CMF** position sets the oprating stages: to drive the burner to the high-flame stage, set CMF=1; to drive it to the low-flame stage, set CMF=2.

To move the adjusting cam set CMF=1 or 2 and then CMF=0.

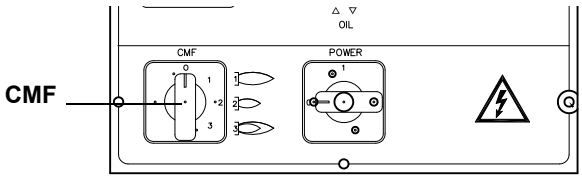

CMF = 0 stop at the current position
CMF = 1 high flame operation
CMF = 2 low flame operation
CMF = 3 automatic operation

Calibration of air pressure switch (when provided)

To calibrate the air pressure switch, proceed as follows:

- Remove the transparent plastic cap.
- Once air and gas setting have been accomplished, startup the burner.
- During the pre-purge phase o the operation, turn slowly the adjusting ring nut **VR** in the clockwise direction (to increase the adjusting pressure) until the burner locks out, then read the value on the pressure switch scale and set it to a value reduced by 15%.
- Repeat the ignition cycle of the burner and check it runs properly.
- Refit the transparent plastic cover on the pressure switch.

PART II: OPERATION

LIMITATIONS OF USE

THE BURNER IS AN APPLIANCE DESIGNED AND CONSTRUCTED TO OPERATE ONLY AFTER BEING CORRECTLY CONNECTED TO A HEAT GENERATOR (E.G. BOILER, HOT AIR GENERATOR, FURNACE, ETC.), ANY OTHER USE IS TO BE CONSIDERED IMPROPER AND THEREFORE DANGEROUS.

THE USER MUST GUARANTEE THE CORRECT FITTING OF THE APPLIANCE, ENTRUSTING THE INSTALLATION OF IT TO QUALIFIED PERSONNEL AND HAVING THE FIRST COMMISSIONING OF IT CARRIED OUT BY A SERVICE CENTRE AUTHORISED BY THE COMPANY MANUFACTURING THE BURNER.

A FUNDAMENTAL FACTOR IN THIS RESPECT IS THE ELECTRICAL CONNECTION TO THE GENERATOR'S CONTROL AND SAFETY UNITS (CONTROL THERMOSTAT, SAFETY, ETC.) WHICH GUARANTEES CORRECT AND SAFE FUNCTIONING OF THE BURNER.

THEREFORE, ANY OPERATION OF THE APPLIANCE MUST BE PREVENTED WHICH DEPARTS FROM THE INSTALLATION OPERATIONS OR WHICH HAPPENS AFTER TOTAL OR PARTIAL TAMPERING WITH THESE (E.G. DISCONNECTION, EVEN PARTIAL, OF THE ELECTRICAL LEADS, OPENING THE GENERATOR DOOR, DISMANTLING OF PART OF THE BURNER).

NEVER OPEN OR DISMANTLE ANY COMPONENT OF THE MACHINE.

OPERATE ONLY THE MAIN SWITCH, WHICH THROUGH ITS EASY ACCESSIBILITY AND RAPIDITY OF OPERATION ALSO FUNCTIONS AS AN EMERGENCY SWITCH, AND ON THE RESET BUTTON.

IN CASE OF A BURNER SHUT-DOWN, RESET THE CONTROL BOX BY MEANS OF THE RESET PUSHBUTTON. IF A SECOND SHUT-DOWN TAKES PLACE, CALL THE TECHNICAL SERVICE, WITHOUT TRYING TO RESET FURTHER.

WARNING: DURING NORMAL OPERATION THE PARTS OF THE BURNER NEAREST TO THE GENERATOR (COUPLING FLANGE) CAN BECOME VERY HOT, AVOID TOUCHING THEM SO AS NOT TO GET BURNT.

OPERATION

⚠	***ATTENTION:*** **before starting the burner up, be sure that the manual cutoff valves are open and check that the mains switch is closed.**

1. Set to the ON position the switch A on the control panel of the burner.
2. Check the control box is not in the lockout position (light **B** must be off); in such a case reset it by the AZLx.
3. Check the series of thermostats (or pressure switches) sends the burner the signal to operate.
4. The startup sequence begins: the control box ignites the fan motor and energises the ignition transformer as well (signalled by the light **H** on the burner control panel).
5. At the end of the pre-purge stage, the light oil solenoid valve EVG1 is energised (signalled by the lamp **G** on the control panel) and the burner is on.
6. The ignition transformer is energized for few seconds after the ignition of the flame (post-ignition time) and at the end of this time is de-energised (light **H** off).
7. After the ignition the servocontrol moves to the high flame position for some seconds, then the operation begins and the burner switches to high flame or to low flame, according to the plant demand.
8. The high/low flame operation is showed by the **F** LED turning on/off.

PART III: MAINTENANCE

At least once a year carry out the maintenance operations listed below. In the case of seasonal servicing, it is recommended to carry out the maintenance at the end of each heating season; in the case of continuous operation the maintenance is carried out every 6 months.

WARNING: ALL OPERATIONS ON THE BURNER MUST BE CARRIED OUT WITH THE MAINS DISCONNECTED AND THE FUEL MANAUL CUTOFF VALVES CLOSED!
ATTENTION: READ CAREFULLY THE "WARNINGS" CHAPTER AT THE BEGINNIG OF THIS MANUAL.

ROUTINE MAINTENANCE

- Check and clean the cartdrige of the fuel filter, replace it if necessary (see next paragraph);
- carefully check for leaks, the fuel flexible hoses;
- check and clean the filter on the fuel pump: bilter must be thoroughly cleaned at least once in a season to ensure correct working of the fuel unit. To remove the filter, unscrew the four screws on the cover. When reassemble, make sure that the filter is mounted with the feet toward the pump body. If the gasket between cover and pump housing should be damaged, it must be replaced;
- remove, check and clean the combustion head (page 38); when reassembling, carefully observe the measures on page 38;
- check the ignition electrodes and their ceramic insulators, clean, adjust and replace if necessary;
- remove and clean the oil nozzles (IMPORTANT: do not clean the nozzles using metallic or sharp utensils, use only solvents or steam); at the end of maintenance operations, refit the burner, turn it on and check the combustion. If in doubt, replace the defective nozzle/s. In case of intensive use of the burner, the nozzles must be replaced at the end of the working season;
- check and carefully clean the flame detection photoresistor, if necessary replace it and, if in doubt, check the detection current ;
- clean and grease levers and rotating parts.

Light oil filter maintenance

For correct and proper servicing, proceed as follows:

1 shut off fuel in the line section being serviced;
2 unscrew the tray;
3 remove the filter cartridge from its support and wash it with petrol or replace if necessary; check seal O-Ring, replace if necessary;
4 reassemble the tray and restore fuel flow.

Removing the combustion head and the oil gun

1 Remove the top cover **C**;
2 remove the photoresistor from its seat;
3 unscrew the revolving connectors (**E** in figure) on the fuel pipes (use 2 spanners to avoid loosening the connections attached to the distributor block);
4 loosen **VRT** screw to free the threaded rod **AR**, then screw out the 2 screws **V** holding the washer **R** and the screw **VRT** again;
5 remove the whole assembly as shown in the pictures;
6 clean the combustion head and the oil gun by means of a vacuum cleaner; to scrape off the scale use a metallic brush.

Note: to replace the combustion head reverse the procedure described above.

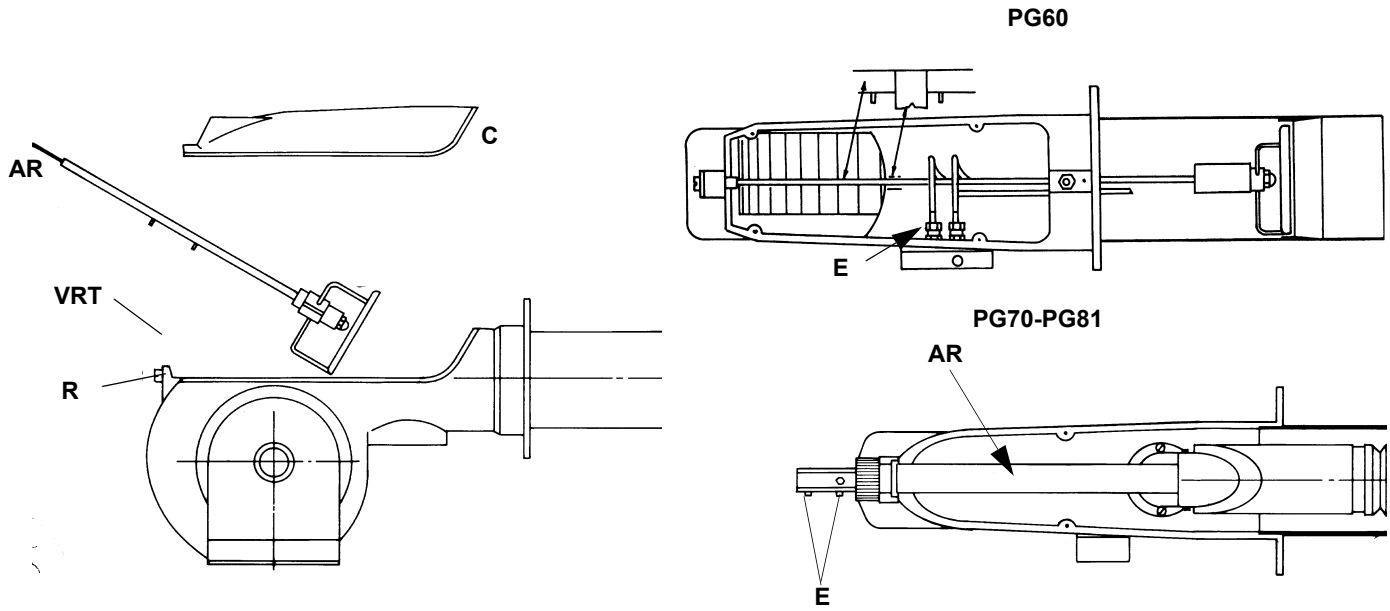

Fig. 13

Removing the oil gun (PG70-PG81)

Once the combustion head is removed, as described before, remove the oil gun as foloows:

1 unscrew the connectors from the 2 oil pipes (**E** in figure) using 2 spanners to avoid loosening the connections attached to the distributor block);
2 loosen the screw **VB**
3 remove the gun with the light oil nozzle holder.
4 clean the oil gun by means of a vacuum cleaner; to scrape off the scale use a metallic brush
5 replace the oil gun, if necessary.

Note: To re-assemble, follow the procedure above in reversed order.

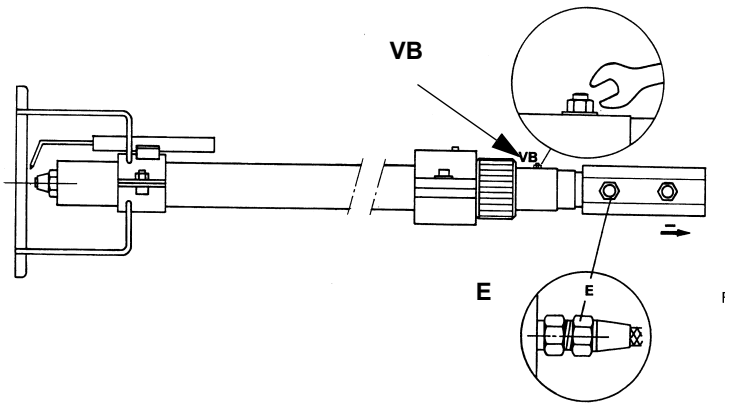

Fig. 14

Correct position of electrodes and combustion head

⚠	**ATTENTION:** avoid the electrodes to get in touch with metallic parts (blast tube, head, etc.), otherwise the boiler operation would be compromised. Check the electrodes position after any intervention on the combustion head.

To guarantee a good ignition the measures shown on the next picture Fig. 15 must be observed.
Be sure to tight the screw on the electrodes group before reassembling the combustion head.

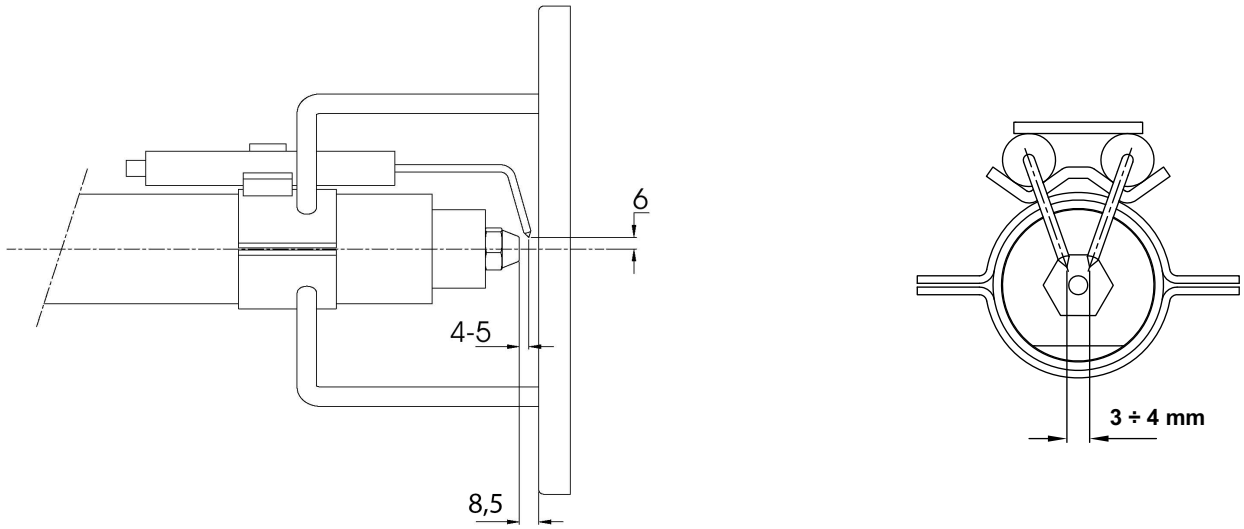

Fig. 15

Replacing the ignition electrodes

⚠	**ATTENTION:** avoid the electrodes to get in touch with metallic parts (blast tube, head, etc.), otherwise the boiler operation would be compromised. Check the electrodes position after any intervention on the combustion head.

To replace the ignition electrodes, proceed as follows:

1 remove the burner cover;
2 disconnect the electrodes cables;
3 remove the combustion head (see par. “Removing the combustion head”);
4 loose screw that fasten the ignition electrodes;
5 remove the electrodes and replace them, referring to the values quoted on Fig. 15.

Cleaning and replacing the detection photoresistor

To clean/replace the photoresistor, proceed as follows:

1 disconnect the system from the electrical power supply;
2 shut off the fuel supply;
3 remove the photoresistor from its slot;
4 clean it using a clean cloth; do not use any burner cleansing sprays;
5 if necessary, replace it;
6 insert the photoresistor into its slot.

Flame detection probe

To clean/replace the detection photocell, proceed as follows:

1 Disconnect the system from the electrical power supply.
2 Shut off the fuel supply;
3 remove the photocell from its slot (see next figure);
4 clean the bulbe if dirty, taking care not to touch it with bare hands;
5 if necessary, replace the bulb;

replace the photocell into its slot.

Checking the detection current

To check the detection signal follow the scheme in the picture below. If the signal is less than the value indicated, check the position of the detection electrode or detector, the electrical contacts and, if necessary, replace the electrode or the detector.

Device	Flame detector	Minimum detection signal
Siemens LMV2x/3x	QRB4	Flame intensity (parameter 954) >16%

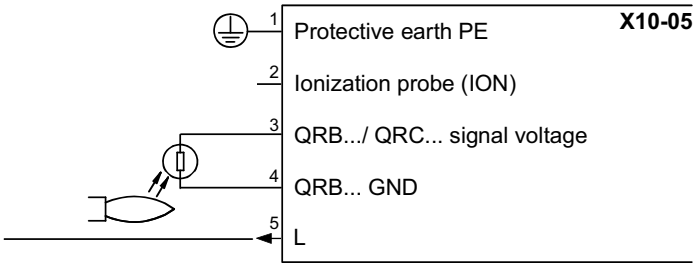

Seasonal stop

To stop the burner in the seasonal stop, proceed as follows:

1 turn the burner's main switch to 0 (Off position)
2 disconnect the power mains
3 close the fuel manual valve of the supply line

Burner disposal

In case of disposal, follow the instructions according to the laws in force in your country about the "Disposal of materials".

WIRING DIAGRAMS

Refer to the attached wiring diagrams.

WARNING

1 - Electrical supply 230V 50Hz 1 a.c./400V 50Hz 3N a.c.
2 - Do not reverse phase with neutral
3 - Ensure burner is properly earthed

TROUBLESHOOTING

	THE BURNER DOESN'T START	THE BURNER REPEATS PRE-PURGE	NOISY FUEL PUMP	THE BURNER DOESN'T START AND STOPS	THE BURNER STARTS AND STOPS	THE BURNER DOESN'T SWITCH TO HIGH FLAME	THE BURNER STOPS DURING OPERATION	THE BURNER STOPS AND REPEATS THE CYCLE DURING OPE-RATION
MAIN SWITCH OPEN	●							
LINE FUSE INTERVENTION	●							
MAX. PRESSURE SWITCH FAULT	●							●
FAN THERMAL CUTOUT INTERVENTION	●							
AUXILIARY RELAIS FUSES INTERVENTION	●							
CONTROL BOX FAULT	●	●		●	●		●	
SERVOCONTROL FAULT						●		
SMOKEY FLAME					●		●	
IGNITION TRANSFORMER FAULT				●				
IGNITION ELECTRODE DIRTY OR WRONG POSITIONED				●				
DIRTY NOZZLE				●			●	
FUEL SOLENOID VALVE DEFECTIVE				●			●	
PHOTORESISTOR DIRTY OR DEFECTIVE					●		●	
HI-LO FLAME THERMOSTAT DEFECTIVE						●		
WRONG POSITION OF SERVOCONTROL CAMS						●		
FUEL PRESSURE TOO LOW				●				
DIRTY FUEL FILTERS			●	●			●	

C.I.B. UNIGAS S.p.A.
Via L.Galvani, 9 - 35011 Campodarsego (PD) - ITALY
Tel. +39 049 9200944 - Fax +39 049 9200945/9201269
web site: www.cibunigas.it - e-mail: cibunigas@cibunigas.it

Note: specifications and data subject to change. Errors and omissions excepted.

Siemens LMV5x

Service Manual

M12920CC rev 2.1 08/2017

Warnings:

To avoid injury to persons, damage to property or the environment, the following warning notes must be observed

Qualified personal

In the sense of this documentation, qualified personal are those who are knowledgeable and qualified to install, mount, commission, operate and service / maintain LMV5 system together with burner & boiler products.

The personal must have the appropriate qualifications to carry out these activities, for example:

Trained and authorized to energize and de-energize, ground and tag circuits and equipment according to applicable safety standards.

Trained or instructed according to the latest related standards (e.g. EN298, EN676, EN267, ..).

Notes of caution:

The equipment must be installed in compliance with the regulations in force, following the manufacturer's instructions, by qualified personnel.

Qualified personnel means those having technical knowledge in the field of components for civil or industrial heating systems, sanitary hot water generation and particularly service centres authorised by the manufacturer.

Improper installation may cause injury to people and animals, or damage to property, for which the manufacturer cannot be held liable.

Remove all packaging material and inspect the equipment for integrity.

In case of any doubt, do not use the unit - contact the supplier.

The packaging materials (wooden crate, nails, fastening devices, plastic bags, foamed polystyrene, etc), should not be left within the reach of children, as they may prove harmful.

Before any cleaning or servicing operation, disconnect the unit from the mains by turning the master switch OFF, and/or through the cut- out devices that are provided.

Make sure that inlet or exhaust grilles are unobstructed.

In case of breakdown and/or defective unit operation, disconnect the unit. Make no attempt to repair the unit or take any direct action.

Contact qualified personnel only.

Units shall be repaired exclusively by a servicing centre, duly authorised by the manufacturer, with original spare parts.

Failure to comply with the above instructions is likely to impair the unit's safety.

To ensure equipment efficiency and proper operation, it is essential that maintenance operations are performed by qualified personnel at regular intervals, following the manufacturer's instructions.

When a decision is made to discontinue the use of the equipment, those parts likely to constitute sources of danger shall be made harmless.

In case the equipment is to be sold or transferred to another user, or in case the original user should move and leave the unit behind, make sure that these instructions accompany the equipment at all times so that they can be consulted by the new owner and/or the installer.

For all the units that have been modified or have options fitted then original accessory equipment only shall be used.

This unit shall be employed exclusively for the use for which it is meant. Any other use shall be considered as improper and, there- fore, dangerous.

The manufacturer shall not be held liable, by agreement or otherwise, for damages resulting from improper installation, use and failure to comply with the instructions supplied by the manufacturer.

1 WIRING RECOMMENDATIONS 4
1.1 Earthing 4
1.1.1 TN earthing system 4
1.1.2 Protective Earth (PE) and Functional Earth (FE) 4
1.2 .Frequency inverter / Variable Speed Drive (VSD) 5
1.3 Ignition electrodes and transformers 5
1.3.1 Recommendations 6
1.3.2 Shielding 6
1.4 Wireway and electrical conduit 7
1.4.1 Servomotor wiring example 9
1.4.2 Bus cable wiring on LMV5x and AZL doors. 9
1.4.3 EARTH connection example. 9
2 AZL display/programming unit 10
2.1 LMV5x program operating phases 11
2.2 LMV5x program structure 12
2.3 Burner ID number 13
2.4 Password 14
2.4.1 Access to service levels by password 14
2.4.2 Password Logout 14
2.4.3 Changing password 14
3 Thermostatic series and safety loop 15
4 Actuators 16
4.1 Addressing the actuators 16
4.2 Actuator doors configuration 17
4.3 Setting the actuator speed 17
5 Setting the load controller 18
6 Setting the probes and set-points 19
6.1 Configuration of a temperature probe at X60 door 19
6.2 Configuration of a pressure or a temperature probe type at X61 door 20
6.2.1 Configuration of a pressure or a temperature probe signal at X61 door 20
6.3 Configuration of the X62 door input signal 20
6.4 Setting the setpoint and the burner and the PID operative band 21
6.4.1 Set-point 21
6.4.2 SD_ModON e SD_Mod Off 21
6.4.3 PID control parameters 22
6.5 Setting functions “TL_ThreshOff” and “TL_SD_On” 23
7 VSD Standardization 24
8 SPECIAL POSITIONS 25
8.1 Ignition position 25
8.2 Prepurge position 25
8.3 Home position 25
8.4 Postpurge position 25
9 ADJUSTING THE AIR/FUEL RATIO CURVES 26
9.1 Fuel burner settings - curve-points 26
9.2 Setting the load points output (burners with no FGR) 27
10 Configurations for burner with FGR 30
10.1 Recommendations 30
10.2 Address and activate the AUX3 servomotor. 31
10.3 Setting the special positions 32
10.4 Setting the load controller mode: see the previous chapter (regolazione senza FGR) 32
10.5 FGR mode choice 33
10.6 Main parameter of the FGR function 34
10.7 Example of FGR factor and FGR Maps Factor on the burner regulation. 35
11 Cold start thermal shock (CSTP) 36
12 BURNER MANUAL OPERATION 38

1 WIRING RECOMMENDATIONS

1.1 Earthing

1.1.1 TN earthing system

For the LMV5x-System it is preconditioned that a TN earthing system is used.

In a TN earthing system, one of the points in the generator or transformer is connected with earth, usually the star point in a three-phase system.

TN−S: PE and N are separate conductors that are connected together only near the power source. This arrangement is the current standard for most residential and industrial electric systems in North America and Europe.

TN-C-S: Combined PEN conductor from transformer to building distribution point, but with separate PE and N conductors in fixed indoor wiring.

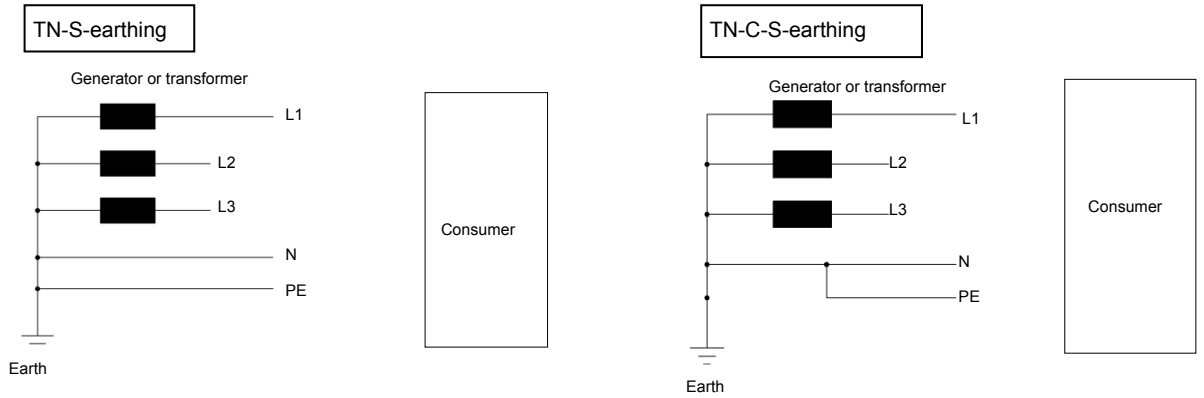

⚠	LMV system must be connected to earth (PE). ΔVolt must be 0 V between N-PE. NOTE: PE = protection earth, it is not FE FE = functional earth

1.1.2 Protective Earth (PE) and Functional Earth (FE)

Protective **E**arth (PE):

Known as an equipment grounding conductor, avoids hazards by keeping the exposed conductive surfaces of a device at earth potential.

To avoid possible voltage drop no current is allowed to flow in this conductor under normal circumstances, but fault currents will usually trip or blow the fuse or circuit breaker protecting the circuit.

For example: burner body or the third wire in a 3 wire cable (N L E)

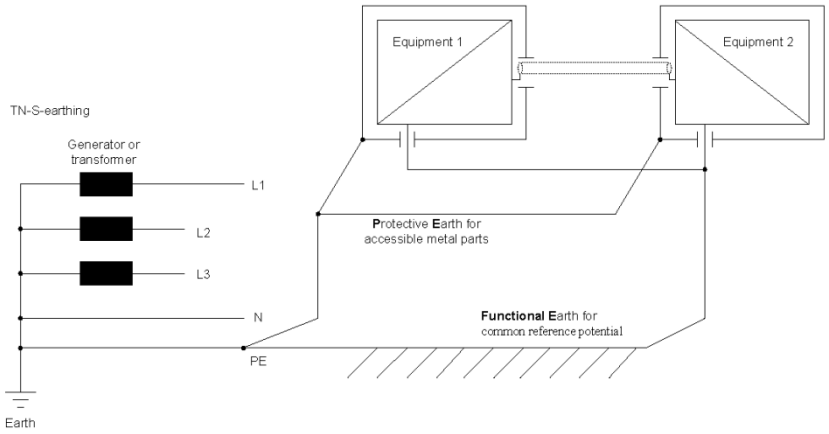

Functional **E**arth (FE):

Is not intended for shock protection. It is used for a common reference potential.

For example: cable shields.

1.2 .Frequency inverter / Variable Speed Drive (VSD)

A VSD is one of the strongest EMC sources in a boiler house, so the following is recommended:

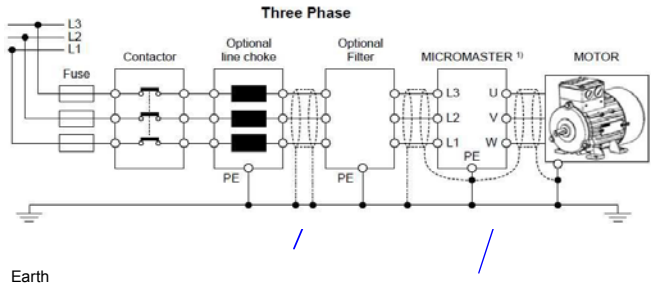

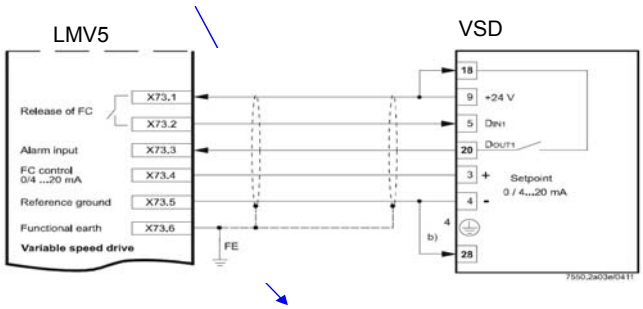

Note: If the LMV5 is mounted in a cabinet, alternative to (X73.6 / FE), also a connection with the PE- rail in the cabinet is possible

Use only VSD with EMC- filter!

Cable from VSD to the fan motor (Line voltage)

Use a complete separate and shielded cable from the VSD to the fan motor! Connect the shield at VSD- and at the motor- side with PE.

Details and further information see related VSD- documentation.

Cable from LMV5 to VSD (Low voltage)

Use a shielded cable from LMV5 to VSD. The shield of this cable has to be connected only at LMV5 side with X73.6 (FE), not at the VSD side:

1.3 Ignition electrodes and transformers

The Ignition is also one of the strong EMC sources, so the following is recommended:

- Keep the cable loop/length in the high voltage ignition circuit as short as possible.
- Use special EMC-ignition cable
- Avoid capacitive and inductive coupling to other signal paths.
- Use separate wiring for the ignition high voltage cable, with max. possible distance to other cables and to the burner housing.
- e.g.: use a electrical insulating conduit or distance parts (e.g. plastic material), see also Appendix "Example for wiring, earthing and shielding the LMV5-System"
- Prefer a double pole ignition (see drawings below).
- When using a double probe ignition, the cables should be run close together to ensure that the area of emissions is as small as possible.

Double pole ignition: recommended

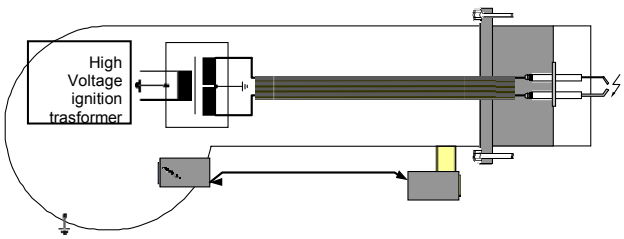

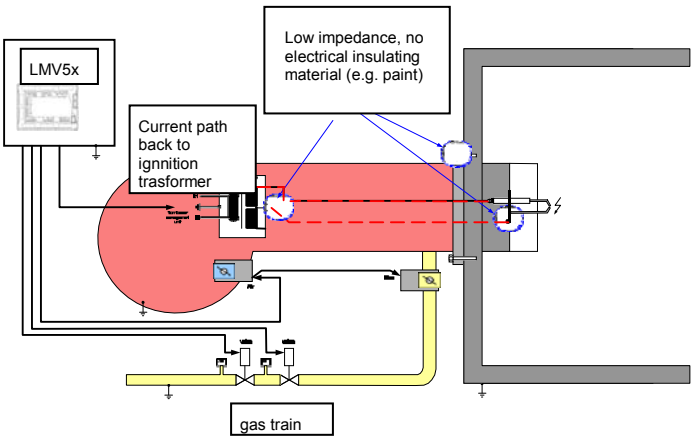

If a single pole ignition must be used, it is very important to have a low impedance at the mechanical connections (no insulation material, e.g. paint), because than you get a **good** current path from the ignition spark back to the ignition transformer, that results in **low** EMC-emissions:

If you have high impedance at the mechanical connections, e.g. caused by paint, you get **bad** multiple current paths from the ignition spark back to the ignition transformer, that results in **high** EMC-emissions

1.3.1 Recommendations

It is recommended to use a metal "mounting plate" for the LMV5 Base Unit and the TransformerAGG5.220.

Use this plate to provide the Functional Earth (FE), see also /EARTH connection example

The connection of the FE to the LMV5 has to be made by connecting the X52.4 terminal withFE!

⚠	Follow exactly the shield and earth connection in the wiring diagram

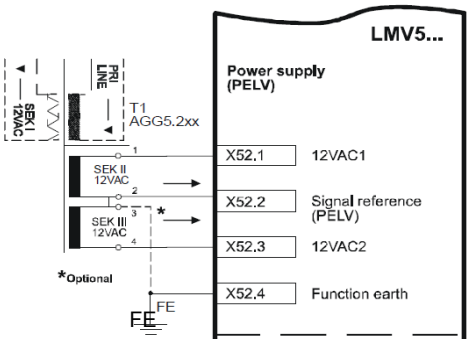

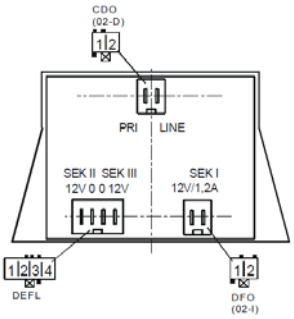

In some cases connecting the terminal X52.2 with FE results in an improved EMC- immunity of the LMV5. Make this connection and check the result, if there is no improvement, remove this connection.

The FE is wired LMV- internal to the terminals for the shields (e.g. for Temperature- & Pressure- Sensors, …), see "4. Shielding"

To have a good connection of FE to the actuators SQM4/9, make certain that there is a proper electrical contact between the housing of the actuators and FE.

If necessary connect the actuators SQM45/48/91 with a separate cable with the maximum possible diameter to FE, see also Appendix "Example for wiring, earthing and shielding the LMV5-System"

1.3.2 Shielding

The LMV5-FE-terminals for the shields are LMV5 internally connected with X52.4, this terminal must be connect external with FE!, see also "3.3 ".

The shield terminals for the CAN-Bus (X50.1, X51.1) are connected direct with X52.4, the other shied terminals are connected via capacitors to prevent DC- current.

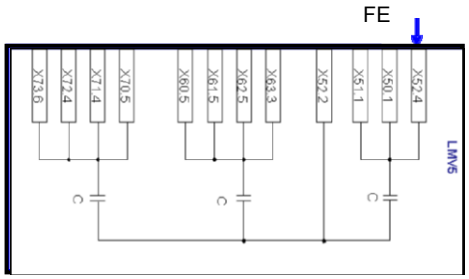

"LMV5 connection to FE and internal wiring"

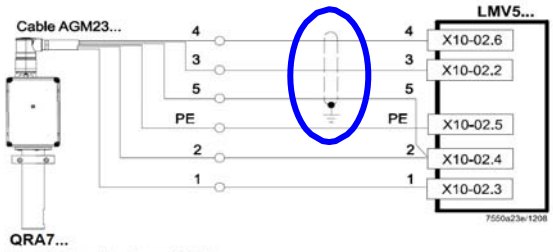

Figure 27: Connection diagram AGM23

For the cables listed below use shielded cables:

For the CAN-Bus cable use AGG5.631 and/or AGG5.641 together with AGG5.110 = CAN bus connection shield, for connecting the CAN bus to the basic unit. More details see page 36 "Installation Guide CC1J7550.1"

- Cables for the VSD:
- Line voltage cable VSD - Fan motor
- Low voltage cable LMV5 – VSD (terminals X73)
- Cables for Temperature or Pressure sensors, set points, load output at the LMV5 Base Unit: X60, X61, X62, X63
- Cables for the Fuel Counters at the LMV5 Bas Unit: X71, X72
- Cable for the Speed sensor: X70
- Cable for the QGO20 sensor at the PLL52: X81
- Cables for Temperature sensors at PLL52: X86, X87

(only if present) Cable for QRA7- Signal wires no. 3, 4 and 5, for cable length > 10m and < 100m; consider reinforced insulation to signal cable and connect it to PE at the cabinet PE- rail.

1.4 Wireway and electrical conduit

The following cables are recommended for separate wiring;

Complete separate from all other cables:

- Cable for "VSD to Fan motor" Line voltage, see also "1. Frequency inverter / Variable Speed Drive (VSD)"
- Cable for ignition high voltage, see also "2. Ignition"
- Cable for the Flame sensors

Together in cable duct 1 for Low voltage, e.g.:

- Cable for CAN-Bus
- Cable for VSD speed sensor, LMV5 X70
- Cable for VSD Release & Set point , LMV5 X73
- Cables for the Load controller: Temperature or Pressure sensor, set point, load output at the LMV5 X60, X61, X62, X63

Together in cable duct 2 for Line voltage, e.g.:

- Cable for Ignition transformer
- Cables for other Line voltage signals, e.g. Gas pressure switches, Air pressure switches, ….
- Cable for Gas valves SKP/VGD

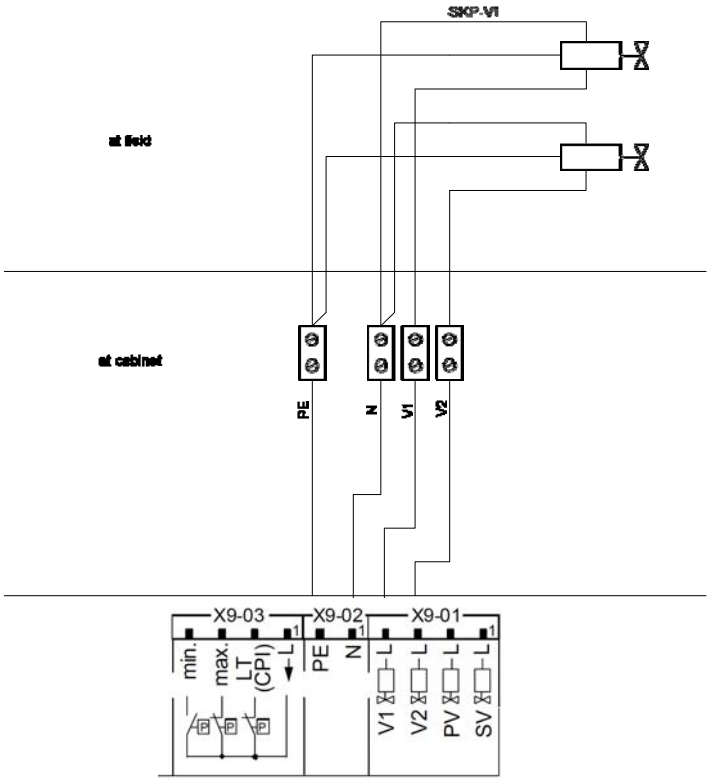

The cables from the LMV5 to the SKP/VGD -Gas vales shall be connected at the LMV5 side with X9-01: L-Valve1, L-Valve2 and with X9-02, N, PE) and connected at the SKP side separate to each SKP.

Example of wiring, see next paragraph Wireway and electrical conduit

⚠	NOTE: KEEP SEPARATE SIGNALS CABLES, OUTPUT CABLES, PHOTOCELL CABLE AS SHOWN IN THE BELOW PICTURE

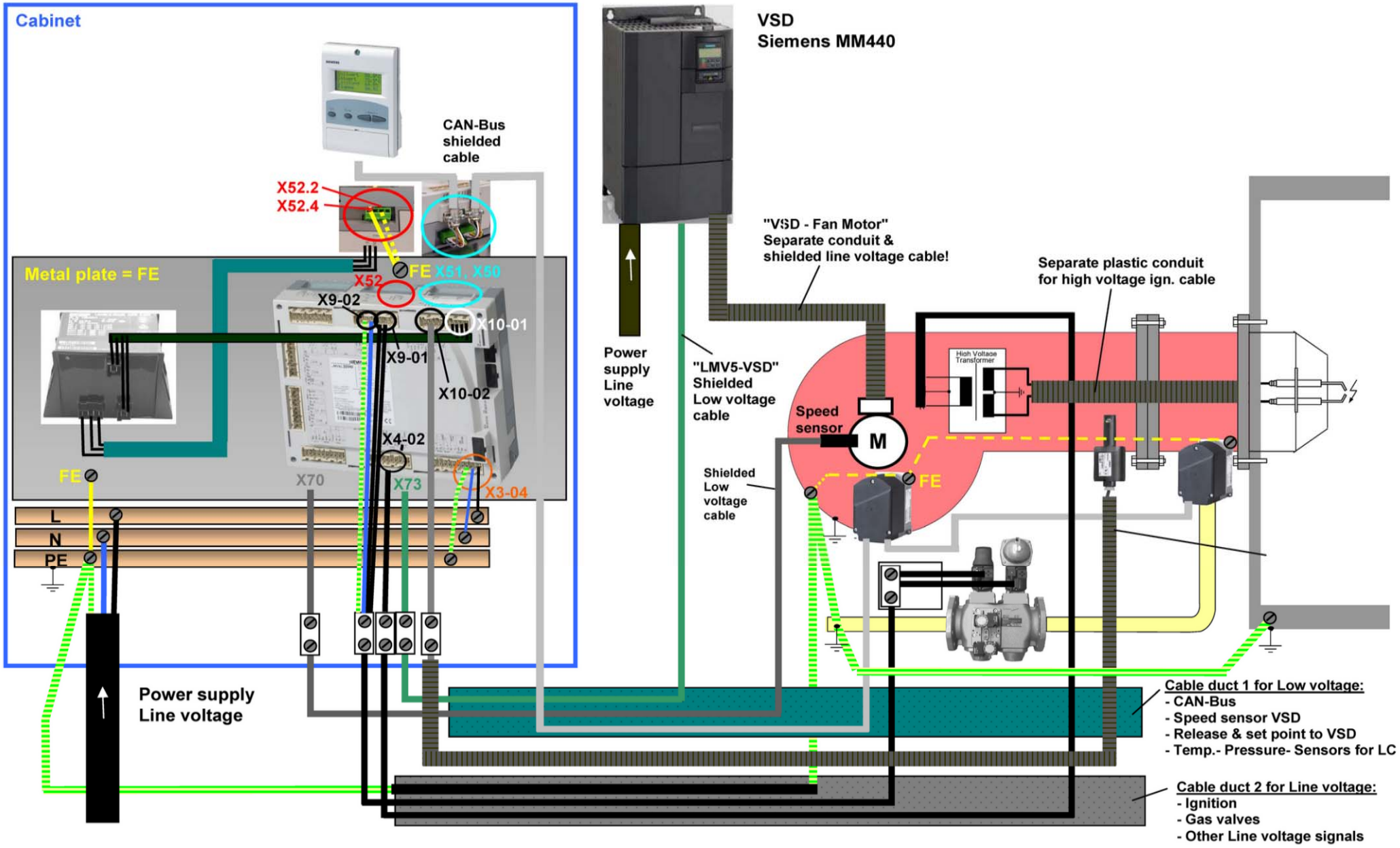
Cabinet
CAN-Bus
shielded
cable
X52.2
X52.4
Metal plate = FE
FE
X51, X50
X52
X9-02
X10-01
X9-01
X10-02
X4-02
FE
X70
X73
X3-04
L
N
PE
Power supply
Line voltage
VSD
Siemens MM440
"VSD - Fan Motor"
Separate conduit &
shielded line voltage cable!
Separate plastic conduit
for high voltage ign. cable
Power
supply
Line
voltage
"LMV5-VSD"
Shielded
Low voltage
cable
High Voltage
Transformer
Speed
sensor
M
Shielded
Low
voltage
cable
FE
Cable duct 1 for Low voltage:
- CAN-Bus
- Speed sensor VSD
- Release & set point to VSD
- Temp.- Pressure- Sensors for LC
Cable duct 2 for Line voltage:
- Ignition
- Gas valves
- Other Line voltage signals

1.4.1 Servomotor wiring example

1.4.2 Bus cable wiring on LMV5x and AZL doors.

1.4.3 EARTH connection example

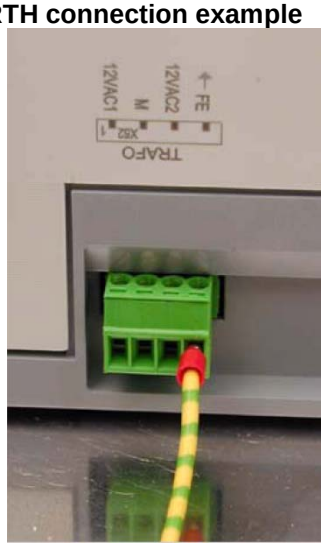

2 AZL display/programming unit

Users can set only the LMV parameters that can be accessed without password: (see “Adjusting the temperature set-point”). The Siemens AZL User Interface allows programming the Siemens LMV control box and monitoring the system data.

The user interface is made of:

display: it shows menus and parameters

ESC Eso key (previous level): it goes back to the previous level menu or exits the programming mode without changing data.

ENTER Enter key (next level): it confirms the data changing and jumps to the next menu/parameter.

SELECT keys: they select a menu item and change the parameter values.

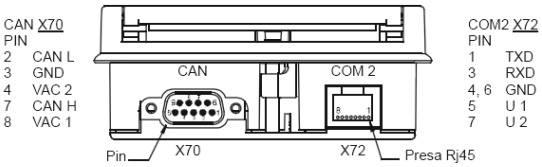

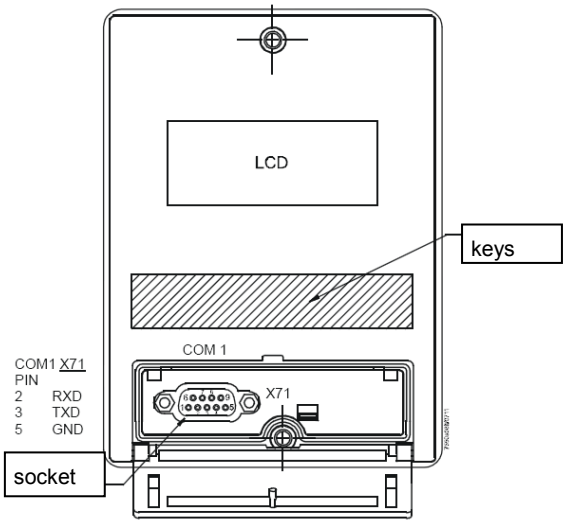

AZL5x provides three sockets to interface with other devices:

X70 socket for CAN bus connection: it provides power supply to display also.

COM1 (X71) for connection to PC/laptop by RS232 connector

CMO2 (X72) for connection to building automation system by RJ45 connector.

Note: COM1 and COM2 ports do not work at the same time.

⚠	**Caution: when MODBUS in active, it is not possible to execute the backup via ACS450; if backup is executed the set-point will be missing and the burner will immediately turns off.**

2.1 LMV5x program operating phases

Phase number	Description	Sequence
10		Home run
12		Stand by
20,21	Waiting to start realase	Startup
22	Start fan on	Startup
24	Driving to pre-purge	Startup
30....34	Pre purging	Startup
36	Driving to ignition pos	Startup
38	Ingnition pos	Startup
40,42,44	Fuel release 1	Startup
50,52	Fuel release 2	Startup
54	Driving to low flame	Startup
60,62	Shut-down low fire	Operation
70,72	Driving to prepurge	Shutdown
74....78	Post-prepurging	Shutdown
79	Test Air PressSwitch	Shutdown
80....83		Valve proving
01		Safety Phase
00		Lockout

At burner startup, the AZL display shows, one by one, the various phases of the start-up program, until it reaches normal operation phase (Phase 60).

LMV5x controller is factory preset. Changing are possible according to the password input

By closing the "thermostat series" and once the start-up sequence is accomplished (from phase 12 to pahse34), the burner is driven to the factory-set ignition position (phase 38).

The burner remains in that position because this is the only one work point in memory.

The fuel/air ratio curve must be set, until the maximum load limit (100% output).

During the setting, the actuators move according to the curve points. While the actuators move, always check the combustion analysis, point by point, and the flame stability.

The fuel/air curve points must be set during the commissioning, by a qualified operator.

⚠	**CAUTION! The procedure requires a password: qualified personnel only must check all changes to combustion parameters by means of the combustion analyzer. Remember that the password will elapse if no key is pressed for a certain period. The unit will ask for the password again**
⚠	**ATTENTION! During the cold start phase, it is necessary to set the burner load. Too low output values could damage the combustion head, blast tube, oil nozzle (if present). The minimum working point must be set by qualified personal.**
⚠	**CAUTION!: check the combustion analysis, point by point, and the flame stability.**
⚠	**ATTENTION! Set the real load output percentage at the corresponding curve-point on AZL during the burner regulation.**

2.2 LMV5x program structure

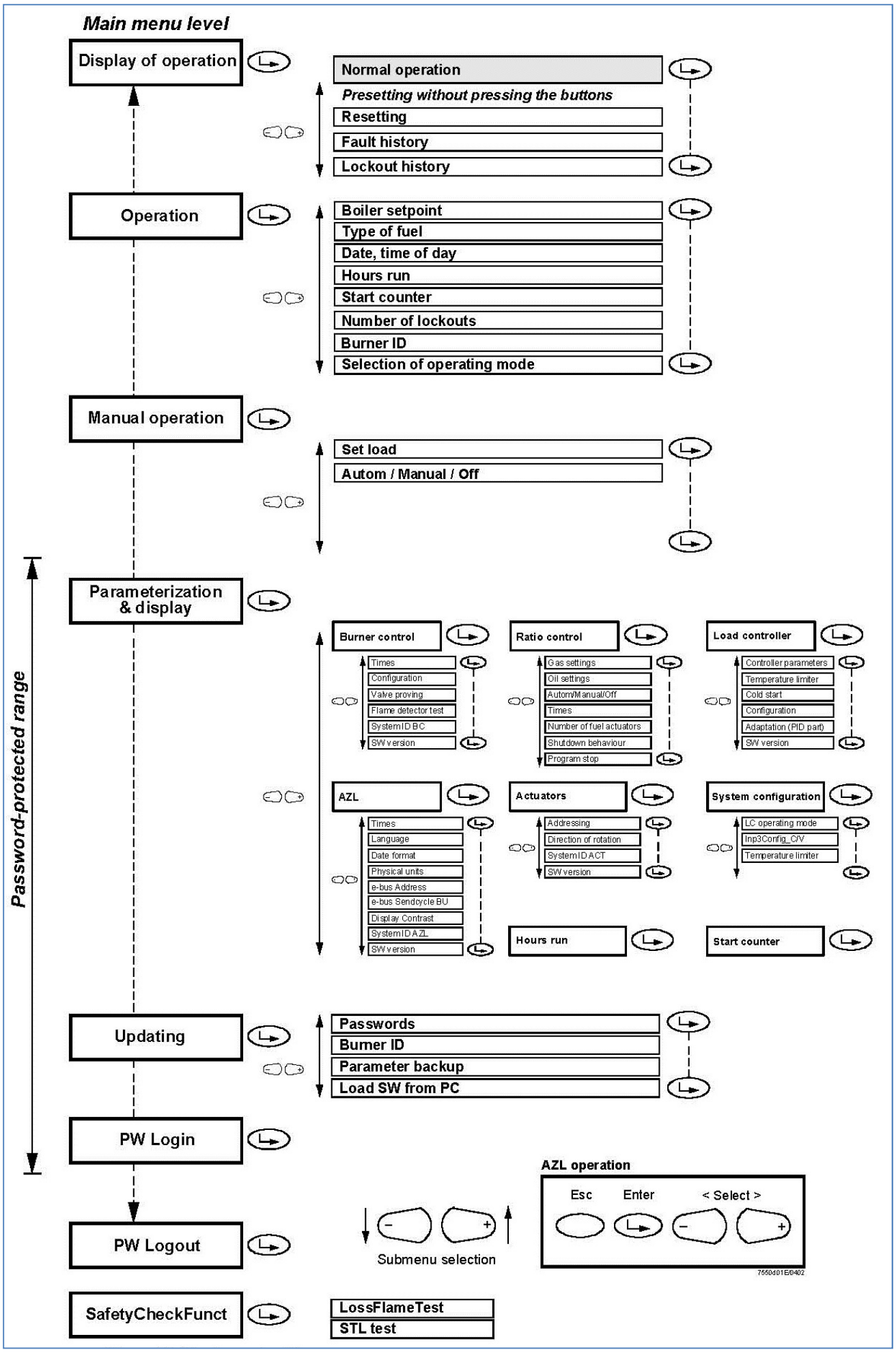

NOTE:

(1) only for LMV52.400, LMV51.300 without temperature compensation

(2) only for LMV5.200 (controlling the oxygen level in the exhaust gas flue) and LMV52.400 (monitoring the oxygen level in the exhaust gas flue, a lock out occur if a limit value is overcoming)

(3) Only for LMV51.300 (in this case VSD cannot be used), LMV52.xxx

⚠	**ATTENTION: LMV51.300: HAS ONE AUX. IT CAN BE SET FOR FGR OR VSD OR "VSD AND FGR" TOGETHER**

⚠	**ATTENTION: IT IS RECOMMENDED TO NOT USE O2 MONITORING IF FGR IS INSTALLED AND ACTIVE**

2.3 Burner ID number

The burner ID number corresponds to the **burner serial number**.

NOTE: in case of call to the Service Center, always tell the burner type and serial number (see burner data plate).

NOTE: burner ID number must be set.

Following the below route access to the programming levels of the menu:

1st level	2nd level	3rd level	4th level	5th level	6th level	Description
OperationalStat						
	BurnerID					Identification of burner

the product ID number is an OEM parameter, entered by the burner manufacturer and it can not be changed; it consist of minimum 4 and maximum 15 characters.

2.4 Password

2.4.1 Access to service levels by password

Depending on password (service or OEM), different parameters are visible.

"Service" parameters, as per the actuator curves and the set-point values, are password protected. The operator must logon using the "**9876**" password.

"User" level doesn't need a password.

If a password shall be entered, line Enter password is selected by means of decrementing (pointer points to the first character of that line) and then finally selected by pressing Enter.

Then, the pointer jumps to the first position of the password entry line. Now, through incrementing or decrementing, a character (digit or letter) can be selected. A character is confirmed by pressing Enter. If a wrong entry has been made, the last character can be edited again by pressing Esc.

The other password positions can be selected, edited and entered in a similar way. Hence, when making an entry, only 1 character is visible. When the last character of the password is reached, the entry is to be confirmed by pressing Enter.

Display before the first password character is entered:

Enter Password

: * * * * * * * *

The example displays when entering the third password character:

Enter Password

: * * **S** * * * * *

If the check of the password entered is positive, the change to the next menu level takes place. Otherwise, the display returns to the main menu level.

To go back to the main menu, press “Esc” until the first level menu is reached, then press the “right arrow” till the first item is reached, then press “ Enter “ twice.

2.4.2 Password Logout

To avoid customer changes on parameter settings and consequently changes in regulation, the password must be logged out. The “password logout” functions on the first level menu: press to choose “PW Logout” then press “Enter“.

Note: if no key is pressed within a settable period, the password is deactivated automatically.

Note: if a power supply drop occurs to the unit, the password will be automatically deactivated.

2.4.3 Changing password.

Following the below route access to the programming levels of the menu by means the Esc

1st level	2nd level	3rd level	4th level	5th level	6th level	Description
Updating						
	Password					To change password
		ServicePassword				For service only
		OEM Password				For OEM only

3 Thermostatic series and safety loop

The burner shuts down properly when the thermostatic series (X5-03.1 and X5-03.4 - terminals 3 and 4 of the burner terminal block) opens. In this way, before shut-down, the burner drives to the minimum load, then the fuel valve will close. The post-purging phase will be performed if set. By re-closing the thermostatic series, the burner will start-up again.

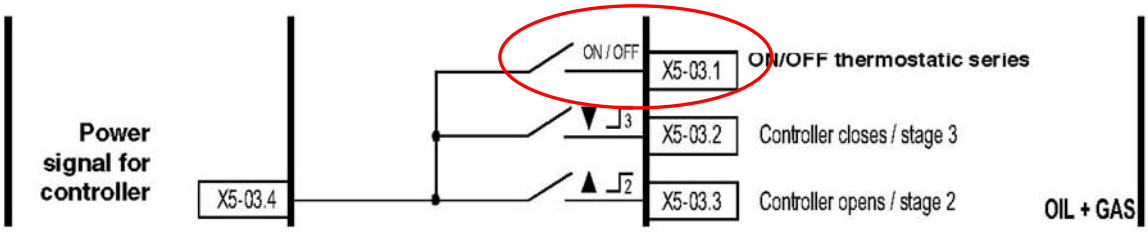

In the plant other safety devices are provided (levels, pressure switches, thermostats, air damper) . All these contacts are connected in series to the 318-319 terminals of the burner supply terminal block. When the safety loop closes, the burner is ready to restart. The actuators move to "home position" (standby position), and if terminals 3-4 are closed the start-up cycle resumes; otherwise the burner enters the standby phase.

In the plant the safety thermostat is provided as well. If this thermostat switches (terminals X3-04.1 e X3-04.2 corresponding to terminals 318 and 319 of the burner supply terminal block - see below), the system will lead to an immediate burner lockout.

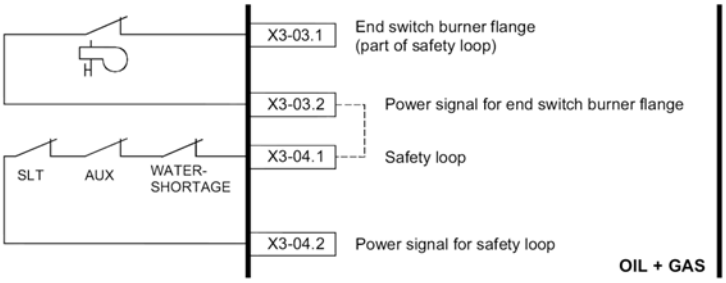

Keys:
SLT: safety loop thermostat
AUX: auxiliary contact
Water Shortage: water flow switch

In case of burner designed with automatic pull-out system from the generator, the burner flange end switch is connected to terminalsX3-03.1 e X3-03.2. If the contact open, the burner automatically shuts down.

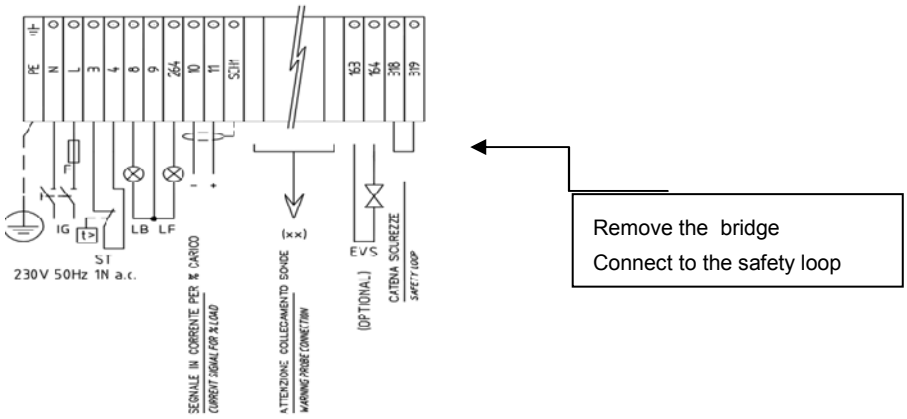

NOTE: When the safety loop opens, the burner will immediately turns off, skipping the low flame stage. It's important to distinguish between "safety loop" and "thermostatic series"

The maximum number of emergency shut-downs is 16. When this number is reached a lockout will occur AZL will show the message: “Open safety loop”.

Following the below route access to the programming levels of the menu:

1st level	2nd level	3rd level	4th level	5th level	6th level	Description
Params & Display						Menu level for making the parameter settings
	BurnerControl					Setting the burner control parameters
		Configuration				
			RepetitCounter			It sets the maximum number of possible repetitions
				SafetyLoop	1...16	Default is set on 16

4 Actuators

4.1 Addressing the actuators

The addressing assigns to each actuator its proper function. The addressing is factory set by the burner manufacturer.

If an actuator must be replaced, it is necessary to address it, otherwise the system will not work. The parameter that sets the actuator function is protected by the Service level password. Remember to check that the jumper “Bus termination” of the last actuator on the CAN bus is set to “On”, before starting addressing.

Following the below route access to the programming levels of the menu by means the Esc

1st level	2nd level	3rd level	4th level	5th level	6th level	Description
Params & Display						
	Actuators					
		Addressing				Addressing unad- dressed actuators
			AirActuator GasActuat (Oil) OilActuator AuxActuator 1 AuxActuator 2 AuxActuator 3 (**)			(**) used with FGR

To address an actuator, choose the corresponding actuator and follow the instructions on display:

When the actuator green LED flashes, it means that one of the following function is set according to the number of blinks:

Blinks	Actuator function
1 blink	air damper actuator
2 blinks	gas butterfly valve actuator
3 blinks	oil pressure governor actuator
4 blinks	auxiliary actuator AUX1
5 blinks	auxiliary actuator AUX2
6 blinks	auxiliary actuator AUX3

If the burner is equipped with FGR, AUX3 must be used

CAUTION: it is recommended not to adjust the actuators. Anyway, never press the actuator red button, otherwise the fundamental parameters, necessary for the burner operation, will be cancelled. The burner will therefore continuously lock out

In case P1 was pressed for a long time, it will be necessary to perform a new addressing of the actuator.

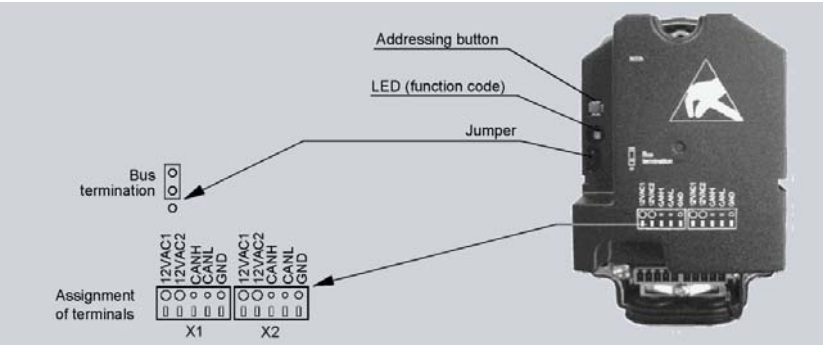

ATTENTION: when the actuator LV green LED is always lit, it means that the actuator has not been addressed yet or it has been reset and needs to be addressed again.

4.2 Actuator doors configuration

After the adressing of the actuators, it is necessary to activate and to configure the operation way for each servomotor.

⚠	**ATTENTION: Activate only the actuators that are really present, otherwise an error will occur.**

1st level	2nd level	3rd level	4th level	Possible choices
Params&Display				
↳	RatioControl			
	↳	Gas/OliSetting		
		↳	AuxActuator AirActuator AuxActuator1 AuxActuator2 AuxActuator3 VSD GasActuator	Deactivated Activated Air influencing (only with LMV52x if O2 control is present) (values available Only with LMV51.300) VSD = VSD only AUX3 = FGR only, without temperature compensation VSD+AUX3 = VSD and FGR

⚠	**LMV 51.300 has the possibility to operate with VGD+FGR without temperature compensation**

4.3 Setting the actuator speed

LMV sees VSD as an actuator, that's why the speed ramp up and the stop times must not be higher than the actuator stroke time. If it is necessary to increase the VSD times, change the actuator stroke time also, according to the next procedure. By following the next table, set both parameter "OperatRampMod" and "TimeNoFlame" to set the ramp up/stop times for the VSD and the actuator opening speed (from 0° to 90°).

Following the below route access to the programming levels of the menu by means the Esc

1st level	2nd level	3rd level	4th level	5th level	6th level	Description
Params&Display						Menu level for making the parameter settings
↳	RatioControl					Parameter settings for fuel/ air ratio control
	↳	Times				
		↳	OperatRampMod	Service	40 s	Operating ramp modulating is the maximum speed of the actuators during operation (phase 60 ÷ 62). A setting of 30 seconds generates a maximum speed of 90° in 30 seconds (3°/s). The LMV5 calculates an individual speed for each actuator, so that all actuators reach their target positions at the same time. Range 10..60s
		↳	TimeNo- Flame	Service	40 s	Drive ramp is the speed of the actuators when traveling to the home, prepurge, ignition, and postpurge positions. A setting of 10 seconds generates a maximum speed of 90° in 10 seconds (9°/s). Range 10..120s

⚠	**ATTENTION: It is suggested to set the ramp up and stop time to a value about 35% lower then the slowest actuator.**

5 Setting the load controller

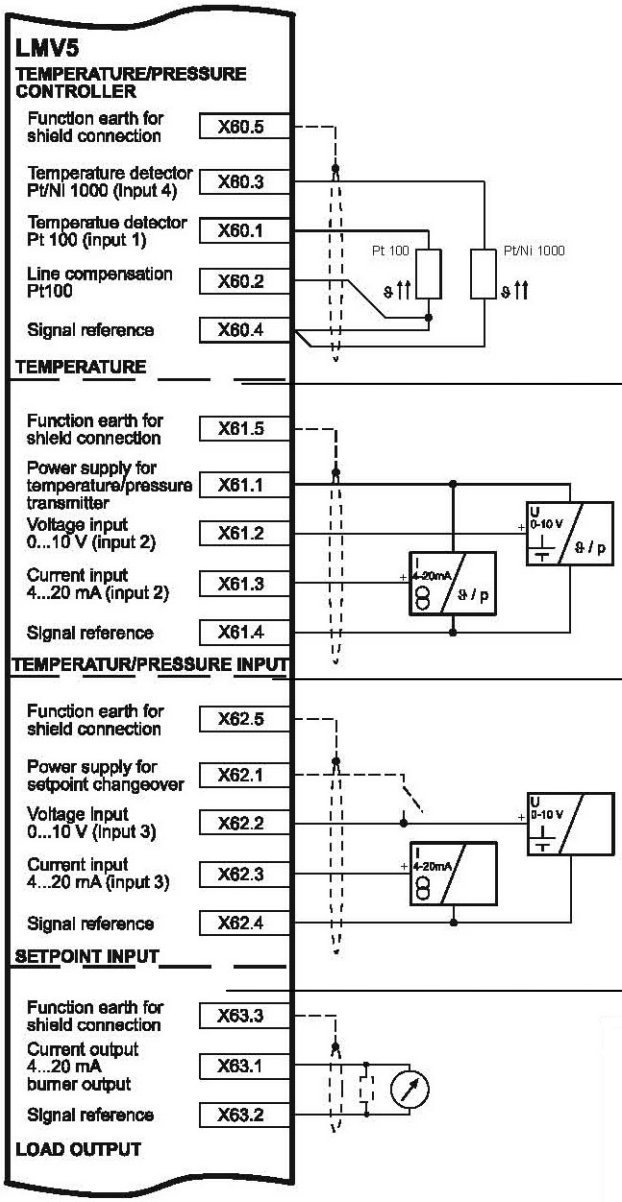

Door X60 is used for IntLC... choice and a temperature modulationg probe is used.

⚠	**ATTENTION: in case of FGR, it is not possible to connect a modulating temperature probe at the X60 door of the LMX5...** **See the proper chapter for configuration.**

Door X60 is used for IntLC.... choice and a pressure probe is used.

It can be used also if the temperature probe has an analogue exit or a converter from Ohm to mA /V is used.

In this case the right input must be set.

⚠	**ATTENTION: in case of FGR, it is possible to connect a modulating temperature probe at the X61 door of the LMX5...**

Door X62 is used for ExtLC...

The input signal come from an external load modulator.

Door X62 is also used to switch from one setp oint to onother one when

IntLC... is used, by measn the opening and closing of the contact between X62.1 and X62.2 terminals

Door X63 is used to remote a load % signal output from the LMV to the client DCS or PLC

Output Value Selection are: Load / Load 0 / O2 / Pos Air / Pos Fuel / Pos Aux1 /Pos Aux2 / Pos Aux3 / Speed VSD / Flame / Temp Pt1000 / TempNi1000 / Temp Pt100 / Temp X61 / Press X61)

IntLC....must be set together with a modulating probe (temperature or pressure). The probe and its signal must be configured. Doors allowed are X60 for temperature probe and X61 for pressure probes or analogue output probes.

ExtLC... must be set together with an external input signal of modulation (analogue or bus) coming from an external output modulator. The input must be configured. Doors allowed are X62 for the type of signal choice.

Following the below route access to the programming levels of the menu

1st level	2nd level	3rd level	4th level	5th level	6th level	Description
Params & Display						Menu level for making the parameter settings
	LoadController					Settings for the internal load controller
		Configuration				General con- figuration of the load con troller
			LC_OptgMode			Operating mode with load control- ler
				ExtLC X5-03 Int LC Int LC Bus Int LC X62 Ext LC X62 Ext LC Bus		See below.

ExtLC X5-03 = three-point external controller (X5-03 terminals)

Int LC = internal controller (LMV5x) (it switches between 2 set points, W1,W2 set thought AZL. the switch from W1 and W2 is realized opening/closing the LMV5x... terminals X62.1, X62.2).

Int LC Bus = internal controller and set point setting via bus connection

Int LC X62 = internal controller (LMV), but set point is externally controlled by means of a voltage/current signal on X62 terminals

Ext LC X62 = external controller, the burner output is controlled by means of a voltage/current signal on X62 terminals

Ext LC Bus = external controller, the burner output is controlled via bus

⚠	**ATTENTION: in case of FGR, it is not possible to connect a modulating temperature probe at the X60 door of the LMX5... See the proper chapter for configuration.**

6 Setting the probes and set-points

If the LMV5x internal load controlled is used, a temperature or pressure probe can be connected to the terminal X60 or X61. In this case, set the type of probe and its operating range.

6.1 Configuration of a temperature probe at X60 door

⚠	**ATTENTION: If the external load controller is set do not connected to terminals X60 or X61.**
⚠	**ATTENTION: If the burner is equipped with FGR with temperature compensation a Pt1000 must be set.**
⚠	**ATTENTION: Depending on the sensor, the value is visualized as °C or bar.**

Following the below route access to the programming levels of the menu by means the Esc

1st level	2nd level	3rd level	4th level	5th level	6th level	Description
Params & Display						Menu level for making the parameter set- tings
	LoadController					Settings for the internal load controller
		Configuration				General configuration of the load controller
			Sensor Select			Select actual value input
				Pt100 Ni1000 Temp sensor Press sensor Pt100Pt1000 Pt100Ni1000 NoSensor		See the table below for the meaning of the choice.

Possible settings are:

Probe	Description
Pt100	Temperature sensor Pt100 at the input X60, internal temperature limiter function = activated
Pt1000	Temperature sensor Pt1000 at the input X60, internal temperature limiter function = activated
Ni1000	Temperature sensor LG-Ni1000 at the input X60, internal temperature function = activated
TempSens	Temperature sensor at the input X61, internal temperature switch function = deactivated
PressSens	Pressure sensor at the input X61, internal temperature switch function = deactivated
Pt100 Pt1000	Temperature sensor Pt100 at input X60 for temperature controller and temperature limiter function and temperature sensor Pt1000 at input X60 additionally for temperature limiter function
Pt100 Ni1000	Temperature sensor Pt100 at input X60 for temperature controller and temperature limiter function and temperature sensor LG-Ni at input X60 additionally for temperature limiter function.
No Sensor	No actual value sensor (e.g. in the case of external predefined loads and without internal temperature limiter).

⚠	**ATTENTION: If a boiler second probe is to be connected to terminals (1000 Ohm only), internal functions TL_ThreshOff and DiffIntervTL_SD_On are activated automatically (see paragraph SETTING FUNCTIONS "TL_ThreshOff" AND "TL_SD_On").**

6.2 Configuration of a pressure or a temperature probe type at X61 door

⚠	**ATTENTION:** If the external load controller is set do not connected to terminals X60 or X61.

If a modulation probe is connected to the X61 terminal, proceeding as follows:

1st level	2nd level	3rd level	4th level	5th level	6th level	Description
Params & Display						Menu level for making the parameter settings
	LoadController					Settings for the internal load controller
		Configuration				General configuration of the load controller
			Ext Inp X61 U/ I			Configuration of external input X61
				4…20 mA 2...10 V 0...10 V 0…20 mA		Set the proper value according to the probe output.

6.2.1 Configuration of a pressure or a temperature probe signal at X61 door

Once the pressure sensor signal type is set, the sensor range must be set as well, proceeding as follows:

1st level	2nd level	3rd level	4th level	5th level	6th level	Description
Params&Display						Menu level for making the parameter settings
	LoadController					Settings for the internal load controller
		Configuration				General configuration of the load controller
			MRange PressSens			End of pressure measuring range for input X61
				0...99.9 bar 0...2000 °C	0...99.9 bar 0...2000 °C	Set the probe value

Example: if a max 10bar Siemens sensor is used, the voltage output signal will be 0 V at 0 bar, while the 10 V signal will correspond to its maximum pressure 10 bar. If the sensor is replaced with a max 16bar one, the 0 V output signal will correspond to 0 bar, while the 10 V output signal will correspond to 16bar pressure: the parameter "MRange Press-Sens" has to be set at 16bar.

6.3 Configuration of the X62 door input signal

Following the below route access to the programming levels of the menu by means the Esc

1st level	2nd level	3rd level	4th level	5th level	6th level	Description
Params & Display						Menu level for making the parameter settings
	LoadController					Settings for the internal load controller
		Configuration				General configuration of the load controller
			Ext Inp X62 U/I			Configuration of external input X62: input signal on X62 can change setpoint or control the load
				4...20 mA 2...10 V 0…10 V 0…20 mA		According to the external modulator output.

If a boiler second probe is to be connected to terminals (1000 Ohm only), internal functions TL_ThreshOff and DiffIntervTL_SD_On are activated automatically (see paragraph SETTING FUNCTIONS "TL_ThreshOff" AND "TL_SD_On").

6.4 Setting the setpoint and the burner and the PID operative band.

6.4.1 Set-point

To set the temperature set-point value, that is the generator operating temperature; proceed as follows.

1st level	2nd level	3rd level	4th level	5th level	6th level	Description
Params & Display						Menu level for making the parameter settings
	LoadController					General configuration of the load controller
		ControllerParam				Controller parameters

It appears the below screen:

SetPointW1 Curr: 90° New: 90°	**Curr:** it shows the current set-point; use the arrows keys to change it. **New:** it is the new set value. Enter to confirm, otherwise exit without changing by pressing ESC. Press ESC one more time to exit the set-point programming mode.

After setting the set-point it is necessary t oset the operation range of the burner. See paragraph SD_ModON e SD_Mod Off

6.4.2 SD_ModON e SD_Mod Off

Once the temperature set-point W1 is stored, set the burner switch-on (SDon) and the switch-off (SDoff) point:

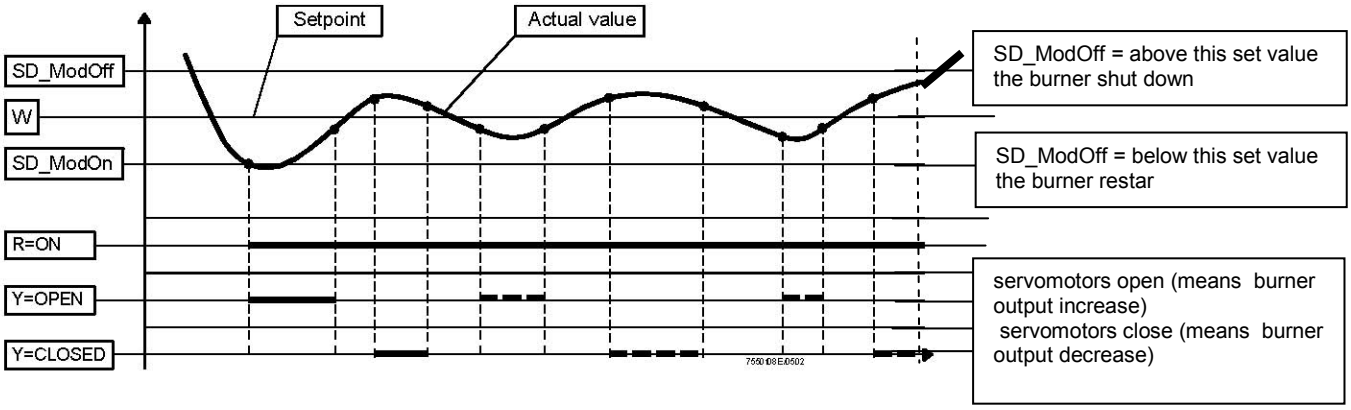

To set these values, choose the item SD_ModOn (SDOn), by scrolling down the “Load controller” menu with the arrow keys and press ENTER:

1st level	2nd level	3rd level	4th level	5th level	6th level	Description
Params & Display				Menu level for making the	Params & Display	
	SD:ModOn			General configuration of the load		SD:ModOn
	SD:ModOff			General configuration of		SD:ModOff

the display will show:

SD_ModOn Curr: 1.0% New: 1.0%	SD_ModOff Curr: 10.0% New: 10.0%

The **SD_ModOn** default value for this parameter is1% that is, the burner will light again at a temperature 1% lower than the set-point.
Change value, if needed, by means of the arrow keys; press ENTER to confirm and the press ESC to exit. Press only ESC to exit without changing.

Now choose **SD_ModOff** always scrolling down the Load Controller menu, by means of the arrow keys, and press ENTER.

The default value for this parameter is10% that is, the burner will turn off at a temperature 1% higher than the set-point.

Press the ENTER to confirm, the press ESC to exit. Otherwise press ESC to exit without changing data. Press the ESC to exit

6.4.3 PID control parameters

The controller's memory contains 5 standard parameter sets.

If required, 1 of these 5 PID triple values can be copied to the storage locations for the actual values so that it becomes active.

PID standard values for the following applications:

1st level	2nd level	3rd level	4th level	5th level	6th level	Description
Params & Display						Menu level for making the parameter settings
	LoadController					Settings for the internal load controller
		ControllerParam				Settings for internal load controller
			ContrlParamList			Settings of controller parameter for internal load controller
				StandardParam	Adaption very fast fast normal slow very slow	

It is possible to manually set the PID parameters to any value in the setting range shown below, to activate a PID regulation from the predefined standard values described below (and edit it further if required), or to use the adaption function (self-setting function) instead of making the settings manually. The LMV5... then acquires the PID parameters itself.

See the LMV5x Siemens manual for instructions. Generally the choice of the proper pre-set PID that LMV5x suggest (very fast / fast / normal / slow / very slow) are enough for a proper operation.

Adaption	The values acquired by the LMV5... adaption function are		
	Xp [%]	Tn [s]	Tv [s]
Very fast (e.g. for small boiler)	42,5	68	12
Fast	14,5	77	14
Normal	6,4	136	24
Slow	4,7	250	44
Very slow (e.g. for large boiler)	3,4	273	48

Table shows the pre set parameter of the PID regulator according to the internal modulator reaction choice.

The parameter Xp is the proportional band in % of the set-point

6.5 Setting functions “TL_ThreshOff” and “TL_SD_On”

These functions enable the settable threshold for the immediate shutdown, if value set on TL_ThreshOff is exceeded. The automatic restart is performed for values lower than the one set on TL_SD_On.

On display, values detected by temperature/pressure probe are shown at the same time.

TL_ThreshOff turns the burner off if temperature exceeds the set value. Gas/Oil valves are suddenly closed.

TL_SD_On automatically restart the burner if the temperature is lower than the set value.

SD_ModOff automatically turns the burner to low flame and then shut down the burner if temperature exceeds the set value.

SD_ModOn automatically restart the burner if the temperature is lower than the set value.

P-Part (Xp) proportional band of modulation.

Note: this function is available if a Pt100 Ni1000 or Pt 1000 temperature sensor is connected to X60.3 and X60.4 terminals.

⚠	**ATTENTION**: basically, these parameters provide a function similar to the safety thermostat one, but can not replace it. The boiler must **always** operate with its safety thermostat connected properly.

NOTE: the parameter TL_ThreshOff for the immediate shutdown, must always be set to a value higher than the SD_ModOff threshold for the normal shutdown. TL_SD_On must be set at a higher temperature than SD_ModOn.

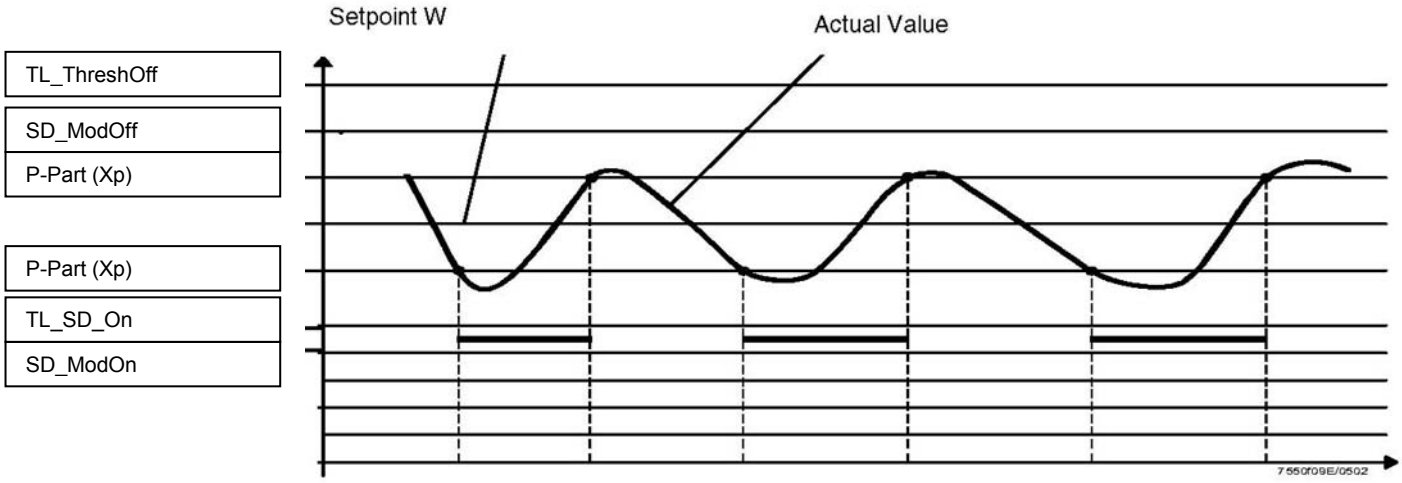

Following the below route access to the programming levels of the menu by means the Esc

1st level	2nd level	3rd level	4th level	Range		Default	Description
Params & Display							Menu level for making the parameter set- tings
	LoadController						Settings for the internal load controller
		TempLimiter					Settings for the temperature limiter function
			TL_ThreshOff	0...2000 °C		95°C	Temperature limiter OFF threshold, in °C
			TL_SD_On	-50...0% TL_Thresh_Off		- 5%	Temperature limiter switching differential ON

7 VSD Standardization

Motor standardization (speed acquisition) allows the LMV unit to control the motor rounds at the maximum frequency signal coming from the VSD. A temporary standardization is factory set only for test purpose. The definite standardization must be performed on site by the Service Center (only if the fan is supplied), before the plant test.

⚠	**ATTENTION: To perform standardization, the burner must be in stand-by mode, not it lockout stage. The Safety loop must be closed (X3-04).**

Following the below route access to the programming levels of the menu by means the Esc

1st level	2nd level	3rd level	4th level	5th level	Range	Description
Params & Display						Menu level for making the parameter settings
	VSD Module					Settings for the VSD module
		Configuration				
			Speed			
				Standardization	Deactivated Activated	Standardization process for fan speed

By activating the standardization, without starting the burner up, the air actuator drives to ites maximum opening. Then the fan motor stars and the VSD drives the motor to its maximum speed. The speed sensor, mounted on the motor, detects the rpm value. LMV stores the data and the motor stops.

⚠	**ATTENTION: do not enter manually the rpm value of the motor data plate on parameter “StandardizedSp”.**
⚠	**ATTENTION: the power cable that connects VSD to motor must be screened.**

8 SPECIAL POSITIONS

8.1 Ignition position

The ignition point is independent from the other curve points of the air/fuel ratio curve.

As far as dual fuel burners, the ignition point set for the gas operation does not depend on the one set for the oil operation. LMV5x allow two different ignition position for gas mode and oil mode.

The burner is provided with a factory-set ignition point, to make easier the first ignition procedure by the Service Centre.

The air actuator at the ignition point, is factory set at a 6°/7° opening, while the gas actuator is set at 12°/15°. In case of burner provided with VSD, it is suggested to set ignition at 100% VSD frequency.

Following the below route access to the programming levels of the menu by means the Esc

1st level	2nd level	3rd level	4th level	5th level	6th level	Description
Params & Display						Menu level for making the para- meter set- tings
	RatioControl					
		GasSettings OilSettings				Choose according to the fired fuel.
			Special Positions			
				IgnitionPos		
				HomePos		
				PrepurgePos		
				PostpurgePos		
					IgnitionPosGas	Set the proper position
					IgnitionPosAir	Set the proper position
					IgnitionPosAux 1	Set the proper position
					IgnitionPosAux 2	Set the proper position
					IgnitionPosAux 3	Set the proper position
					IgnitionPosVSD	Set the proper position

8.2 Prepurge position

Following the same route up to the 4th level, choose the pre-purge position of the servomotors

8.3 Home position

Following the same route up to the 4th level, choose the home position of the servomotors

8.4 Postpurge position

Following the same route up to the 4th level, choose the postpurge position of the servomotors

9 ADJUSTING THE AIR/FUEL RATIO CURVES

⚠	**ATTENTION: when burners are provided with VSD, before setting the air/fuel ratio curves, the Standardization of the motor speed must be performed (see chapter "Standardization").**

1st level	2nd level	3rd level	4th level	5th level	6th level	Description
Params & Display						Menu level for making the parameter settings
↳	RatioControl					Parameter settings for fuel/ air ratio control
	↳	*GasSettings* *OilSettings*				Parameter settings for firing on gas or on oil
		↳	*CurveParams*			

9.1 Fuel burner settings - curve-points

Two curve points are factory set (default settings) corresponding to a hypothetic low flame stage

Note: points P1 and P2, are temporally mentioned 10% and 100% load, independently from the actual load. The operator can name the load on each point, without respecting the actual load value in that point. LMV5x will order those points automatically according to the load values set by the operator.

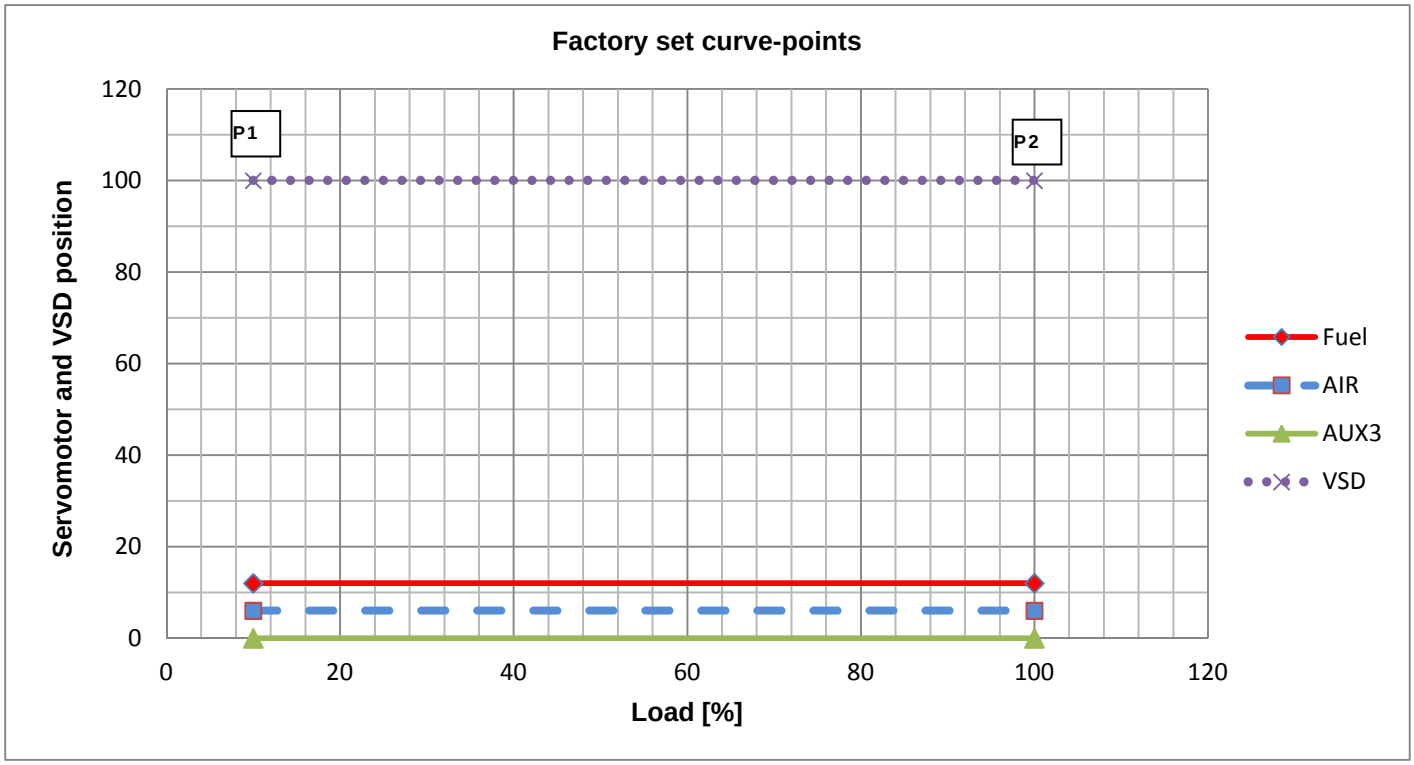

With this setting, by closing the thermostat series, the burner drives to minimum load position **P1**, after ignition. Then it drives to position **P2** without increasing the output, as both the points are set with actuators minimum opening.

⚠	**ATTENTION: For burners with FGR and LMV52.400, the parameter is set to "deactivated".**

9.2 Setting the load points output (burners with no FGR)

Following the below route access to the programming levels of the menu

1st level	2nd level	3rd level	4th level	5th level	6th level	Description
Params & Display						
	RatioControl					Parameter settings for fuel/ air ratio control
		GasSettings GasSettings				Parameter settings for firing on Gas or on Oil
			CurveParams			At this level, the air/fuel ratio during operation is to be set.

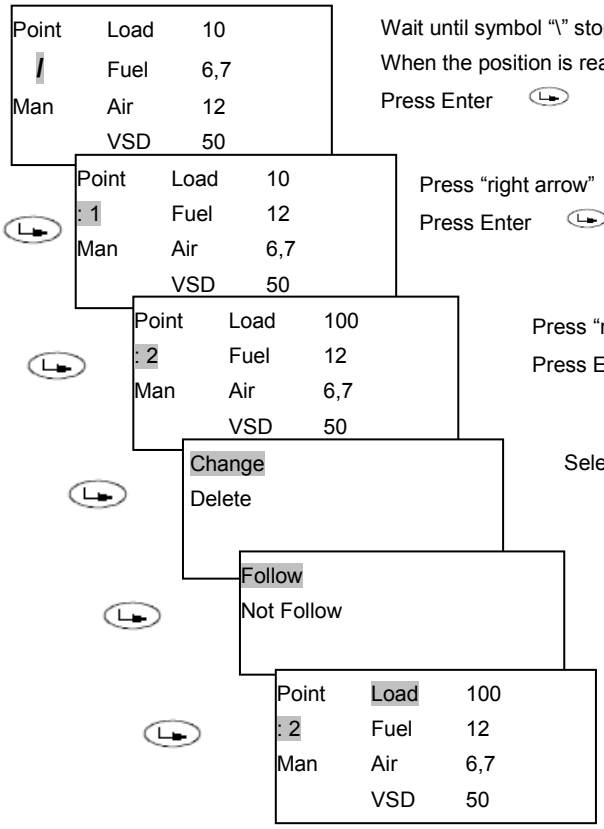

Wait until symbol "\" stops twisting. It indicates that actuators are moving to the displayed position.

When the position is reached it will show the number of the point the LMV5x is at.

Press Enter to see Point1.

Press "right arrow" to scroll to the desired point

Press Enter to change the curve point.

Press "right arrow" to scroll to the desired point

Press Enter to change the curve point.

Select "change" to change the point, or "delete" to cancel it

Press "right arrow" to scroll to the desired point

Press Enter on "Follow". The actuator moves in real time as the operator change its setting

The selector will be on Load.

By menas the arrow scroll to the desired actuator

Now it is possible to change Point2 with the next procedure

Checking continuously the air excess means of the combustion analyzer, increasing by few degrees* the air damper opening and the VSD if provided.

Then increase by few degrees* the gas butterfly valve (or the fuel actuator). Go on step by step, until the butterfly valve complete opening is reached (actuator at 90° - see diagram).

The target is to reach the gas butterfly valve maximum with a sufficient excess of air. While progressively increasing the actuator positions, besides increasing the air quantity the fuel rate must be controlled by means of the valve pressure governor, in order to not exceed the requested maximum flow rate.

Once the gas butterfly valve maximum opening is reached, adjust the fuel **rate** only acting on the gas valve pressure governor (or on the oil pressure governor in case of oil).

⚠	**ATTENTION: as for "increasing by few degrees" it means that the increasing must be performed in order to avoid great excess of air or defect of air.** **Therefore the increasing operation must be performed always checking the flue gas analysis by means of the combustion analyzer. It is recommended to make increasing while maintaining O_2 % between max 7,5% and min 3%.**

It is recommended to save new points increasing the burner output at step odf10÷20% load. Measuring the burner output at the flow meter.

In this way, if for any reason, you must interrupt the commissioning and restart it later, you would help yourself.

Point	Load	100
:2	Fuel	12
O2	Air	6.7
	VSD	70

To choose the actuator to set, press the “left arrow” and choose Air or VSD

Point	Load	100
:2	Fuel	12
O2	Air	6.7
	VSD	70

Press "Enter" to access the Air actuator value to be set.

Point	Load	100
:2	Fuel	12
O2	Air	6.7
	VSD	70

Press keys to change value.

Point	Load	100
:2	Fuel	12
O2	Air	9.5
	VSD	70

Press Enter to confirm the value and go back to Air actuator. (Do not exit by pressing Esc from the values column because data will not be stored)

Point	Load	100
:2	Fuel	12
O2	Air	9.5
	VSD	70

Press arrows to select another actuator to be set, for example, press to choose Fuel)

Point	Load	100
:2	Fuel	12
O2	Air	9.5
	VSD	70

Press keys to change the value. Press Enter to confirm the value and go back to Fuel actuator

Point	Load	100
:2	Fuel	12
O2	Air	9.5
	VSD	70

Press keys to change value.

Point	Load	100
:2	Fuel	15
O2	Air	9.5
	VSD	70

Press Enter to confirm the value and go back to Fuel actuator. (Do not exit by pressing Esc from the values column because data will not be stored)

Checking parameters by means of the combustion analyzer go on increasing the Air (and/or VSD if provided) and the Fuel actuators.
At the end the last point will be set.

Point	Load	100
:10	Fuel	90
O2	Air	50
	VSD	85

Act on the pressure governor to adjust the fuel pressure at the proper value in order to reach the real 100% load of the generator/boiler.

Act only on the AIR or VSD actuators, to adjust the combustion.

Point	Load	100
:10	Fuel	90
O2	Air	90
	VSD	100

An example of final point will be as per the display aside, imaging to set 10 curve-points.

⚠	**ATTENTION: Set the % output load values, for every curve-point**
⚠	**ATTENTION: Adjust actuators position by small changes, always checking combustion parameters.**
⚠	**Caution! For safety reasons, once the maximum load point P2 is set, never go down to the minimum load point P1, without having set the other intermediate points before (see next paragraph).**

⚠	**Caution! In case it is necessary to immediately shut the burner down while working at high flame and the maximum load point is not already set observing the combustion parameters, decrease gas by means of the pressure governor as to drive the burner to a sufficient excess of air, then shut the burner down by the main switch.** **At next start-up, start again with point P2 to the minimum load (factory-setting - see previous paragraph) and go on setting the curve points.**

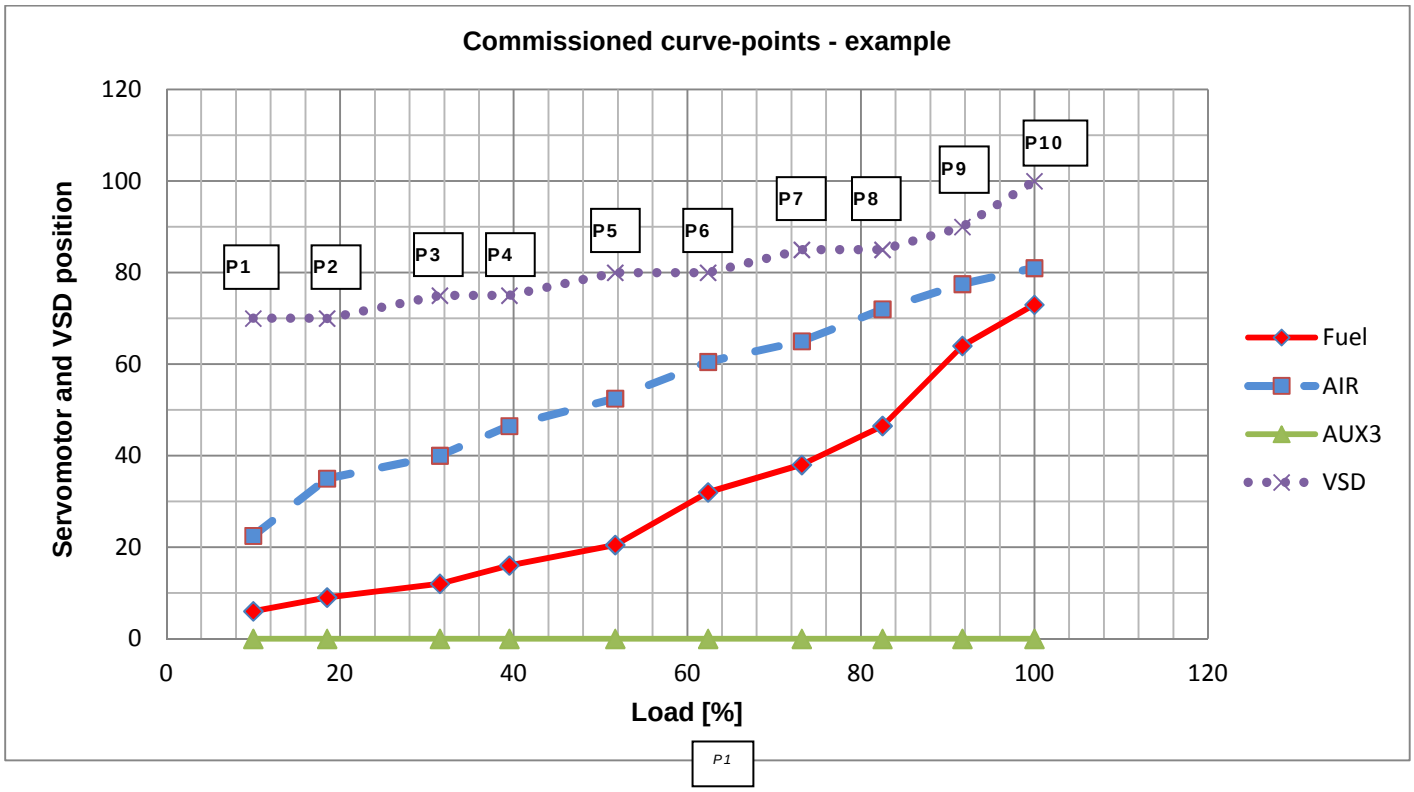

⚠	**ATTENTION: When the maximum load is reached (100%), check again the curve-points. The pressure at the governor has changed and therefore also the gas flow rate to the other points. So, it is necessary to check the adjustment of the points already set.**

⚠	**ATTENTION: for proper operation, it is necessary that the curve of each actuator does not reverse its slope.**
⚠	**ATTENTION: When % load value is changed by user, LMV recalculates all the curve-points according the new load value. It may happen that the point you are adjusting, once saved, is moved to another position.**

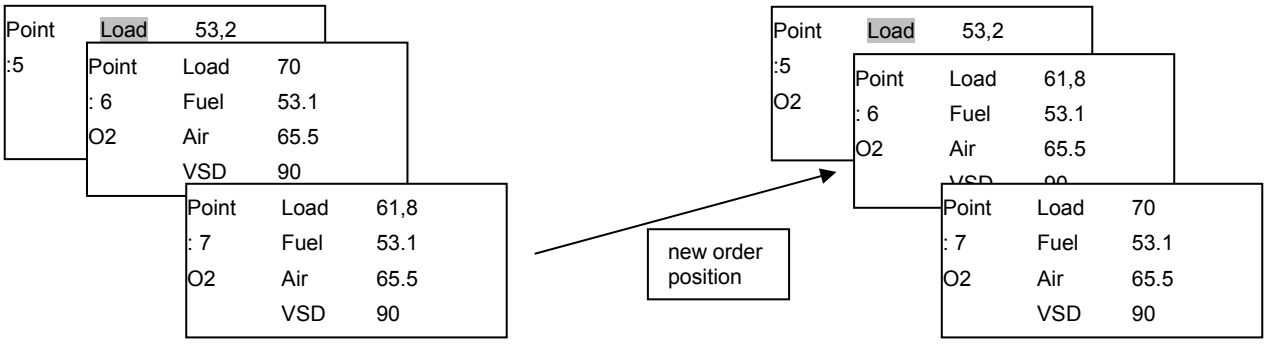

10 Configurations for burner with FGR

10.1 Recommendations

⚠	**Note!** **Reduction of maximum burner output** **Use of the flue gas recirculation (FGR) function or the flue gas mass introduced to the supply air duct might lower the burner's maximum output.** **This means that the maximum amount of combustion air that can be introduced will be reduced.** **It is recommended to consider a proper air excess during the regulation of the burner in order to have to the right O2 content in the smoke, after the flue gas recirculation.** **Hence, the amount of fuel for high-fire operation must be reduced to ensure correct combustion values.**
⚠	**Caution!** **Temperature-compensated flue gas recirculation (FGR) can be correctly set only when selecting with *DriveLowfire* in operation!** **A change in the curve point without the corresponding flue gas recirculation temperature (e.g. *without driving* in operation or in standby) results in an incorrect *pairing* of the values *Flue gas recirculation position* and *Flue gas recirculation temperature*.** **This can lead to excessive amounts of recirculated flue gas, which might cause the flame to lift: Stability limit of flame.**
⚠	**Caution!** **A subsequent change of the curve point without an associated flue gas recirculation (FGR) temperature (e.g. without *DriveLowfire* in operation or standby) leads to an incorrect pairing of *flue gas recirculation-position* and *flue gas recirculation-temperature*.** **This can lead to excessive amounts of recirculated flue gas, which might cause the flame to lift: Stability limit of flame.**
⚠	**Note!** **Flue gas recirculation (FGR) in combination with O2 trim control Recommendation: Do not use flue gas recirculation (FGR) in combination with O2 trim control.** **This has no impact on the use of the O2 alarm.** **The physical effects are the following:** **1. Pressures have reciprocal effects.** **2. The reduction of O2 can lead to a significant increase of NOx levels.** **As a result of these reciprocal effects, it is difficult, if not impossible, to adjust fuel-air ratio control, O2 trim control, and the flue gas recirculation (FGR) function.** **Even if an adjustment was possible, the flame may become instable during operation, or the required NOx levels might not be reached.**
⚠	**Note!** **The full scope of setting *TCautoDeact* is possible only when the flue gas temperature is acquired via the load controller input (X60…).** **When the temperature is acquired via the PLL52... input (X86…) and the O2 trim controller / alarm is active (not *CtrlAutoDeac*), flue gas recirculation (FGR) mode *temperature-compensated* cannot be used (would lead to error *C:F6 D:2*).** **When operating mode *O2 Control* is deactivated (*man deact*), operating mode *TCautoDeact* can be used if the flue gas temperature is acquired via PLL52... (X86…).**
⚠	**Attention!** **If at an dual-fuel burner the FGR function is used for only one fuel (e.g. gas operation with FGR and oil operation without FGR) pay attention to the following:** **When the fuel selection is switched over to the fuel without FGR it must be assured that the FGR actuator is closed and is supervised kept in the closed position.** **This is accomplished by making the following settings for the fuel without FGR:** **- Activation of the AUX3 actuator** **- Parameterization of the positions Home, Prepurge , Ignition and Postpurge to *closed*** **- Parameterization of all AUX3 actuator positions at all curve points to *closed*** **- Parameterization of the FGR operating mode to *Aux3onCurve***

Before to activate the FGR system, it is mandatory to complete the air/fuel ratio curve for each point, up to the maximum burned output.

Check the previous chapter for instructions.

⚠	**WARNING: Activating or increasing the FGR butterfly valve opening, it is mandatory to check the combustion by means a properly and calibrated smoke analyzer.**

10.2 Address and activate the AUX3 servomotor.

Usually these operations are already set in the manufacturer factory.

They would be necessary in same cases as: the substitution of the servomotor, in case the FGR mode were not activated yet or the LMV5x were be supplied loose…

⚠	**WARNING: for LMV52.400 device, in case of FGR servomotor addressing: the only possible choice is AuxActuator3. Don't set the FGR servomotor for a different one.**

1st level	2nd level	3rd level	4th level	5th level	6th level	Description
Params & Display						
	Actuators					Parameter settings for fuel/ air ratio control
		Addressing				Parameter settings for firing on Gas or on Oil
			AirActuator GasActuat OilActuat AuxActuator AuxActuator 2 AuxActuator 3		 AuxActuator 3	AuxActuator 3 MUST be chosen

After the addressing, activate the FGR servomotor.

1st level	2nd level	3rd level	4th level	5th level	6th level	Description
Params & Display						
	RatioControl					Parameter settings for fuel/ air ratio control
		GasSettings OilSettings				Parameter settings for firing on Gas or on Oil
			AuxActuator	deactivated damper act VSD active AUX3 VSD+Aux3	Deactivated for LMV52.xxx AUX3 for LMV51.300	Deactivated for LMV52.xxx AUX3 for LMV51.300
			AirActuator	deactivated activated air influen	 activated	
			AuxActuator 1			
			AuxActuator 2			
			AuxActuator 3		Activated for LMV52.xxx	
			VSD			
			GasActuator OilActuator		Activated Activated	Choice according to the Operation mode gas setting or oil setting.

10.3 Setting the special positions

1st level	2nd level	3rd level	4th level	5th level	6th level	Description
Param & Display						
	RatioControl					
		GasSettings OilSettings				
			SpecialPosition			

Suggested positions are below. They can be modify during the commissioning according to right needs.

Special Position: AUX3 POS

- Home position 0° (Closed)
- Prepurge position 90° (Open)
- Ignition position 0° (Closed)
- Postpurge position 90° (Open)

10.4 Setting the load controller mode: see the previous chapter (regolazione senza FGR)

⚠	**WARNING: If one of the intLC (internal Load Controller) option must be choice, a temperature sensor cannot be connected to the terminal X60. A temperature sensor with analogue output or a converter Ohm → mA or V must be used. They must be connected to the terminals X61.**
⚠	**WARNING: If one of the extLC (External Load Controller) options must be used, set “no sensor”, "Temperature sensor" or "Pressure Sensor" on the choice for the modulation probe.**
⚠	**WARNING: The X61 door must be configured in according to the used sensor or signal.**

10.5 FGR mode choice

1st level	2nd level	3rd level	4th level	5th level	6th level	Description
Param & Display						
	Flue Gas Recirc					
		FGR-Mode	AUX3onCurve time temperature temp. contr. TCautoDeact deactMinpos auto deact			According to the preference and instruction in the table below.

Description of the FGR mode.

FGR-Mode	Description	LMV50 LMV51.3 LMV52.2	LMV52.4... .
Aux3onCurve	Flue gas recirculation (FGR) function is deactivated. Auxiliary actuator 3 is driven along its parameterized ratio control curve	●	●
deactivated	After the ignition position, auxiliary actuator 3 is always held at the minimum position for flue gas recirculation (indicated with #) and the flue gas recirculation temperature is not evaluated (display XXX). This ensures that the system is operated in a safe state if the flue gas recirculation setting could not be fully realized. We recommend performing burner start-up using this setting prior to setting the flue gas recirculation curve		●
time	Auxiliary actuator 3 maintains the ignition position until an adjustable time is reached (parameter “DelaytimeFGR….”). During the operation, the burner regulate its load as per the set curve points, without flue gas recirculation.	●	●
temperature	Auxiliary actuator 3 maintains the ignition position until an adjustable temperature is reached (parameter “FRG On Temp …”). During the operation, the burner regulate its load as per the set curve points, without flue gas recirculation.	●	●
temp.contr.	The position of auxiliary actuator 3 is determined depending on the flue gas temperature and the ratio control curve. In addition, the actuator can maintain the ignition position until an adjustable time (parameter FGR On Time …) is reached		●
TCautoDeact	Same manner of operation as temp.contr., but the function is automatically deactivated should the flue gas sensor become faulty. The actuator is driven to the minimum flue gas recirculation (FGR) position and a warning is issued		●
deactMinpos	After the ignition position, auxiliary actuator 3 always maintains the minimum flue gas recirculation (FGR) position (indicated by #) and the flue gas recirculation (FGR) temperature is not evaluated (display of XXX). The system can thus be driven to a secure state, if it was not possible to fully complete the flue gas recirculation (FGR) settings. It is recommended to use this setting for commissioning the burner before adjusting the flue gas recirculation (FGR) curve		
auto deact	Flue gas recirculation (FGR) with temperature compensation was automatically deactivated. Same operation mode as deactMinpos, but a warning is issued		●

10.6 Main parameter of the FGR function

Parameter	Description	LMV50 LMV51.3 LMV52.2	LMV52.4... .
DelaytimeFGR Gas DelaytimeFGR Oil	Setting of delay time for auxiliary actuator 3 to be kept in the ignition position after entering phase *OPERATION*	●	●
ThresholdFGR Gas ThresholdFGR Oil	Setting of temperature that must not be exceeded so that auxiliary actuator 3 can be kept in the ignition position	●	
FGR-sensor *(*X86 PtNi1000 / X60 Pt1000 / X60 Ni1000)	Selection of temperature sensors for temperature-compensated flue gas recirculation (FGR)	●	●
Factor FGR Gas *Factor FGR Oil*	Readjustment of calculated temperature-dependent position of auxiliary actuator 3. The setting is made in steps of 1%. 100% means no readjustment. Settings <100% reduce the amount of recirculate flue gas (moving the damper toward the fully closed position). The factor has an impact only when there is a deviation from the learned flue gas recirculation (FGR) temperature. This means that when reaching the initially acquired flue gas recirculation (FGR) temperature, the stored position is approached, independent of the flue gas recirculation (FGR) factor. See the *Examples of tables showing the damper positions with FGR*		●
FGR MinPos	Minimum limitation of position of auxiliary actuator 3 for *temp.comp.* and *TCautoDeact* modes. The setting is made as an absolute value and ensures that flue gas recirculation (FGR) always operates with at least a minimum amount of flue gas. The position is also used to ensure a defined damper position for emergency operation or automatically deactivated flue gas recirculation (FGR)		●
FGR MaxPos Fact	Maximum limitation of the required position of auxiliary actuator 3 calculated from the current temperature and the warm position. The setting is made in steps of 1% and refers to the relevant curve-point. Interpolation between the curve-points is linear		●

The parameter are in side the AZL menu with following structure:

1st level	2nd level	3rd level	4th level	5th level	6th level	Description
Param & Display						
	Flue Gas Recirc					
		FGR-sensor	X60 Pt1000 X60 Ni1000			According to the available probe
		ThresholdFGR Gas ThresholdFGR Oil	0…850 °C			According to the regulation needs
		DelaytimeFGR Gas DelaytimeFGR Oil	0…63 min			According to the regulation needs
		Factor FGR Gas Factor FGR Oil	10..100%			According to the regulation needs
		FGR MinPos				According to the regulation needs
		FGR MaxPos Fact	0..100%			According to the regulation needs

WARNING: Only in case of FGR temperature compensation function.

If the detected temperature value is lower than the value recorded during the curve setting, the AUX3 servomotor doesn't reach the set position, but it will be closer. In this condition flue gas recirculation flow could be not sufficient or too much.

NOx value could be different from the expected or the flame could be instable. Try to reduce the correction factor ("Factor FGR Gas" or "Factor FGR Oil"). In case readjust the FGR curve. Probably the point was saved also if the flue gas temperature were too far from the regime condition.

10.7 Example of FGR factor and FGR Maps Factor on the burner regulation.

We consider to set the AUX3 for FGR with the *"temp.contr." Mode*

The curve is as per the below table.

Point	1	2	3	4	Note
Load %	37,5 %	62,5 %	75 %	100 %	
AUX3 FGR Curve	19,3 °	25,0 °	28,5 °	37,0 °	
FGR temperature	72 °C	105 °C	121 °C	150 °C	The flue gas value increase from low to high flame. The temperature is with burner in operative condition.

LMV52.400 will calculate a "Zero Curve" referred to flue gas 0°C temperature.

The "Zero Curve" is calculated in reference to the effect of the temperature on the smoke density.

If "FGR factor" is set at 100% LMV will not make any additional correction.

Point	1	2	3	4	Note
Pos. FGR con T = 0 °C *zero curve*	15 °C	18 °C	19,7 °C	23,8 °C	**FGR Factor set on 100%**

If "FGR factor" is set at lower value than 100% LMV will apply an additional correction to calculate the "Zero Curve".

If "FGR factor" is 50%, the new "zero Curve" will be

Point	1	2	3	4	Note
Pos. FGR con T = 0 °C *zero curve*	7,6°	9,0°	9,8°	11,9°	**FGR Factor set on 50%** The above example shows that – with the *zero curve* – a flue gas recirculation (FGR) factor of 50% leads to a 50% reduction of the damper positions.

If the temperature value of the smoke during the operation of the burner is higher than the temperature value during the commissioning, the AUX3 position will be bigger than the set values.

To avoid a wide opening of the FGR butterfly valve it could be necessary to limit the automatic correction LMV52.400.

This could be necessary if the AUX3 opening become bigger than 90°, if a flame instability happen, or the flue gas recirculation is too big…

To limit the correction due to a higher temperature value, it become necessary to set the parameter "FGR MaxPOS Factor".

Point	1	2	3	4	Note
Pos. FGR	21,2°	27,5°	31,4°	40,7°	FGR MaxPOS Factor set on 10% I valori sono il 10% in più rispetto ai corrispondenti settati inizialmente.

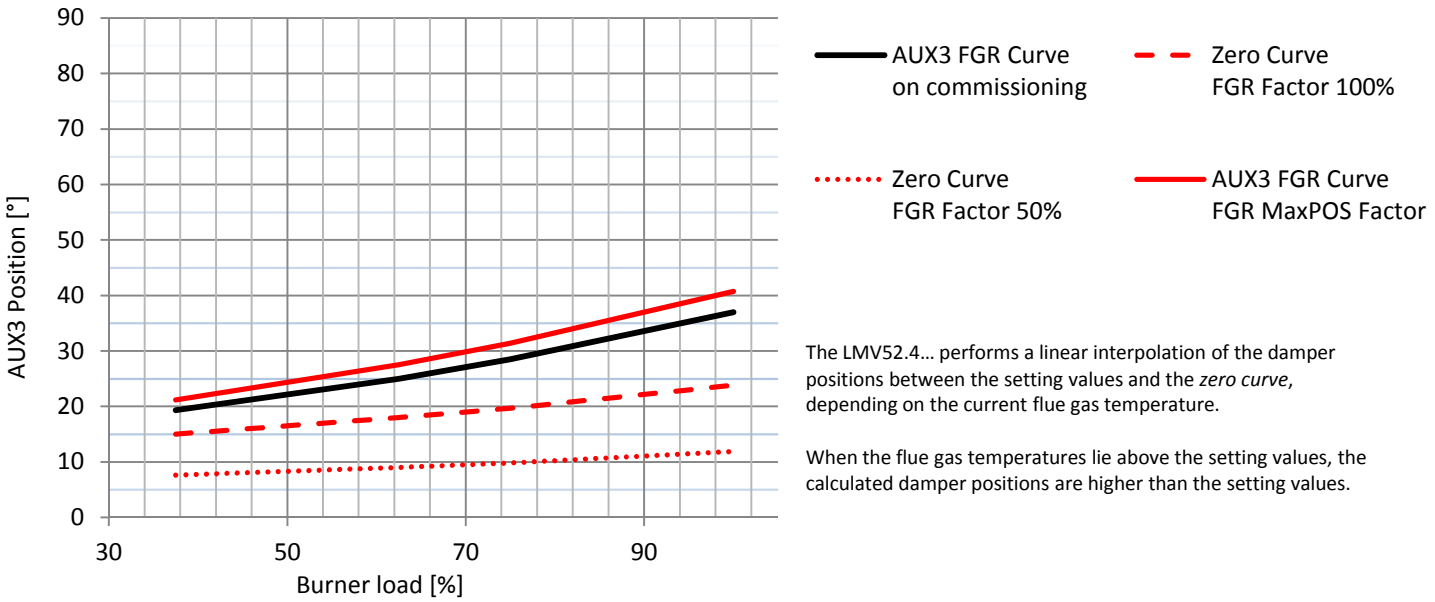

The LMV52.4… performs a linear interpolation of the damper positions between the setting values and the *zero curve*, depending on the current flue gas temperature.

When the flue gas temperatures lie above the setting values, the calculated damper positions are higher than the setting values.

11 Cold start thermal shock (CSTP)

If there is a steam boiler or a boiler that must start up cold in the plant and to avoid thermal shocks a slow heating is required for the boiler by maintaining the burner at the minimum output, the automatic function “Cold start thermal shock” can be performed instead of the manual operation at minimum load.

The CSTP (Cold Start Thermal Schock) function can be enabled by the Technical service only (access by reserved password). if this function is enabled, when the burner starts up the “Thermal shock protection activated” message will be shown.

If this function is not enabled, after start-up, the burner will rapidly increase the load according to the requested value.

The CSTP function is a Service level paramter, to enable this function proceed as follows:

1st level	2nd level	3rd level	4th level	5th level	6th level	Description
Params & Display						Menu level for making the parameter settings
	LoadController					Settings for the internal load controller
		ColdStart				Settings for the cold start (thermal shock protection)
			ColdStartOn	Deactivated Activated		The parameter **ColdStartOn** deactivates or activates the Cold start protection function, the other parameters are factory set and can be changed following the next programming rows (see diagram)
			ThresholdOn	0...100%Wcurren	20%	
			StageLoad	0..100%	15%	
			StageSetp_M od	1...100% Wcurrent	5%	
			Stage- Setp_Stage	1...100% Wcurrent	5%	
			MaxTme- Mod	1...63 min	3 min	
			MaxTmeStage	1...63 min	3 min	Cold start thermal shock protection, maximum time per step (multistage)
			ThresholdOff	1...100% Wcurrent	80%	Cold start thermal shock protection deactivation level referred to the current set-point (Wcurrent)
			Additional-Sens	Deactivated Pt100 Pt1000 Ni1000	Deactivated	Select extra sensor for cold start thermal shock protection
			Temp Cold- Start	0…2000 °C		Display of temperature acquired by extra sensor for the cold start thermal shock protection function
			Setpoint AddSensor	0...450 °C	60°C	Set-point for extra sensor for cold start thermal shock protection
			Release Stages	no release/ release	release	Cold start thermal shock protection load step stage mode (multistage operation)
			MaxTmeStage	1...63 min	3 min	Cold start thermal shock protection, maximum time per step (multistage)
			ThresholdOff	1...100% Wcurrent	80%	Cold start thermal shock protection deactivation level referred to the current set-point (Wcurrent)
			AdditionalSens	deactivated Pt100 Pt1000 Ni1000	deactivated	Select extra sensor for cold start thermal shock protection
			Temp Cold- Start	0…2000 °C		Display of temperature acquired by extra sensor for the cold start thermal shock protection function
			Setpoint Add- Sensor	0...450 °C	60 °C	Set-point for extra sensor for cold start thermal shock protection
			Release Stages	no release/ release	release	Cold start thermal shock protection load step stage mode (multistage operation)

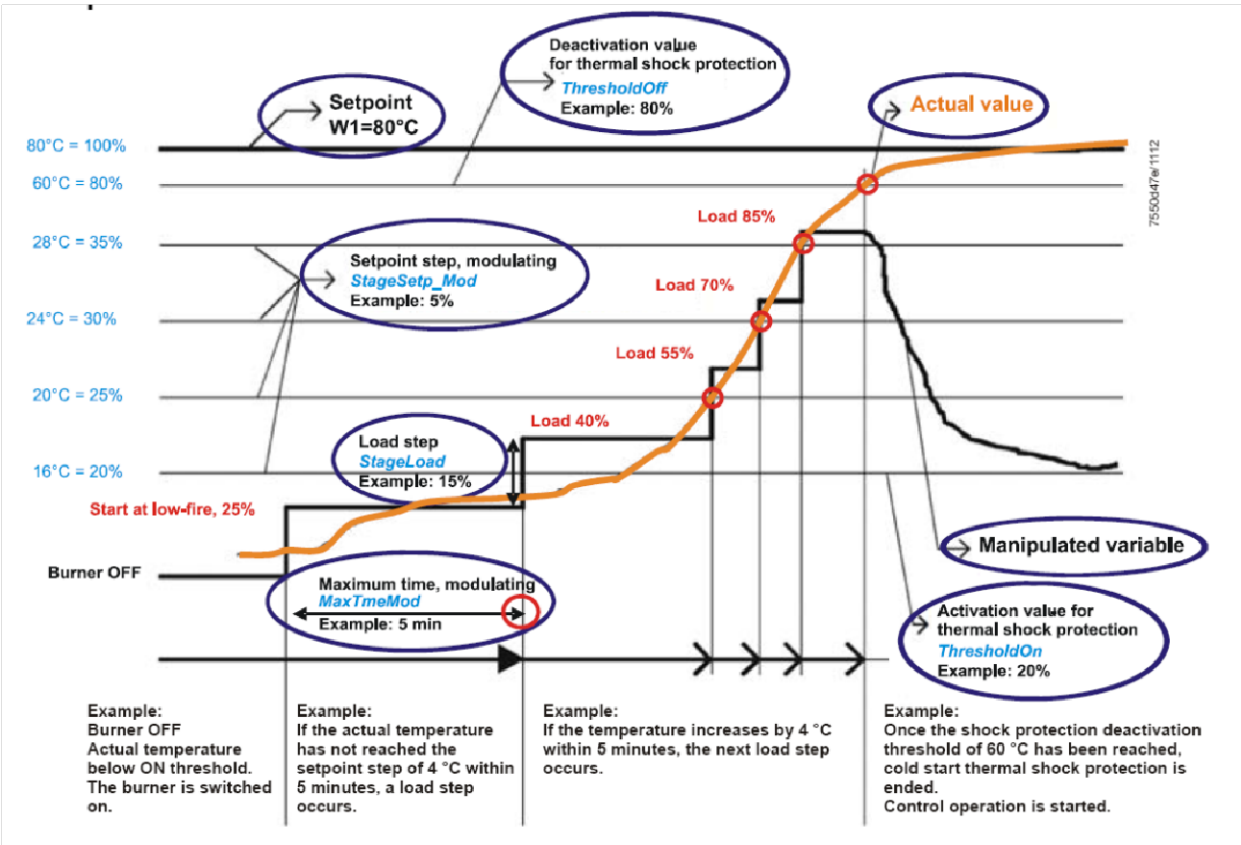

Note: by enabling the manual operation (this function can be set at user level also -see chapter “manual operation”) the CSTP function is momentary excluded, when enabling the automatic operation again, the CSTP function (previously set at Service level) will be enabled as well.

12 BURNER MANUAL OPERATION

The operator can decide if choosing burner manual operation at a settable fixed load or modulating operation through the automatic load controller, then can also set the burner shutdown by means of the “burner off” function.

Choose the type of operation (Au-tom / Manual / Off).

1st level	2nd level	3rd level	Password	Description
ManualOpe- ration				Menu level for activating manual operation with the preselected load
	Au-tom/ Manual/Off			Selection of manual or automatic operation
		Automatic/ Burner on / Burner off	User	

Setting the load percentage for the manual operation

To set the load percentage at which the burner must operate in manual mode, proceed as described below.

1st level	2nd level	3rd level	Password	Description
ManualOpe- ration				Menu level for activating manual operation with the preselected load
	SetLoad			Set target load
		0..100%	User	

LMV51.300B2 / LMV52.200B1 / LMV52.200B2 / LMV52.240B2

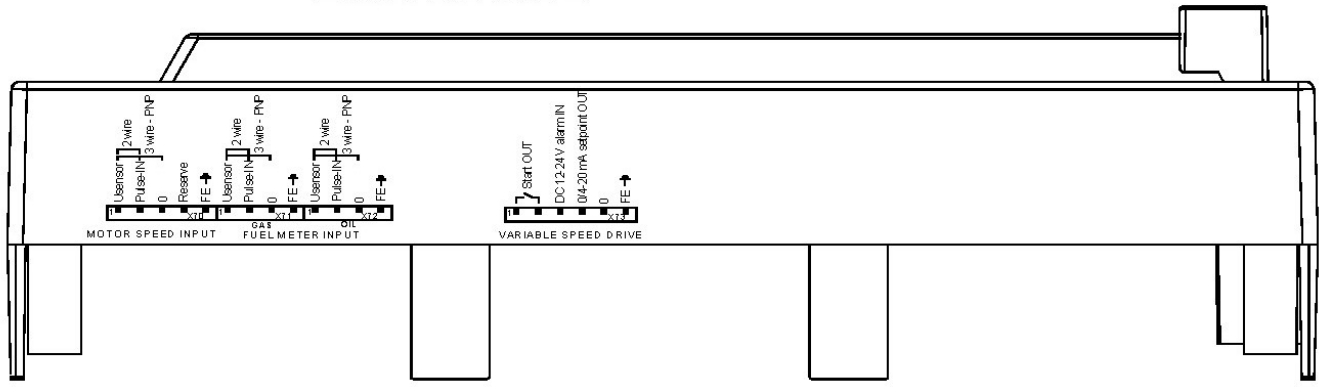

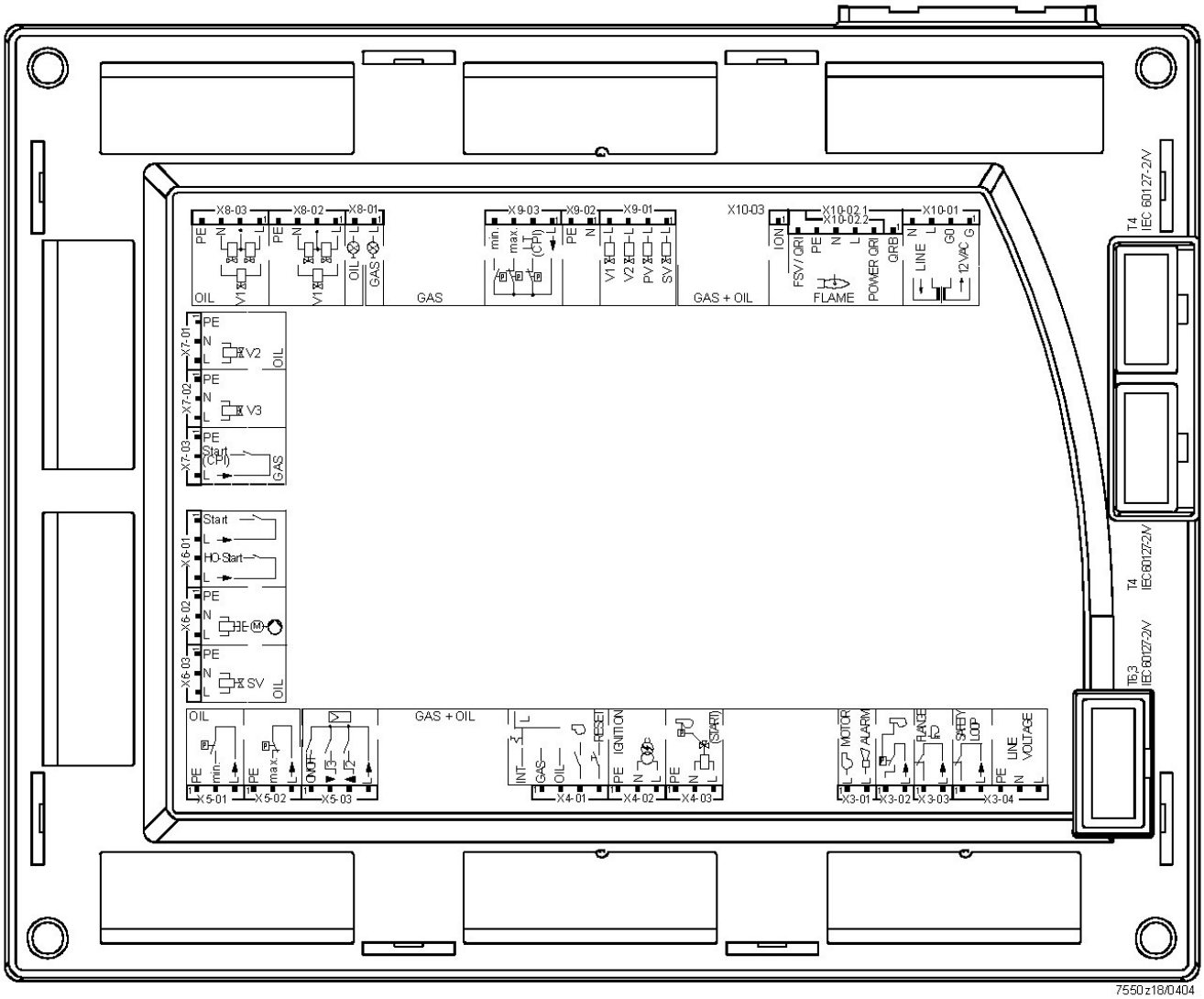

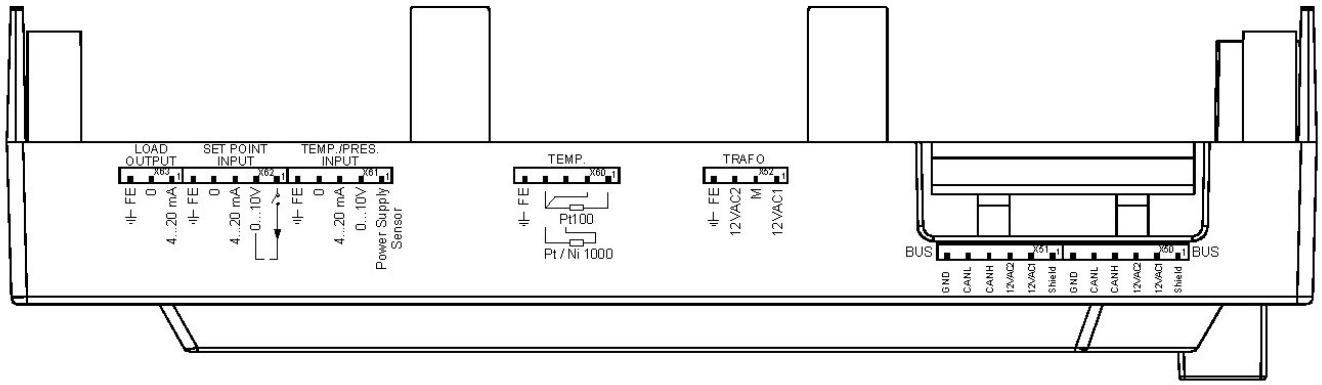

Terminal group	Connection symbol		Input	Output	Description of connection termi- nals	Electrical rating
X3-01	PIN1	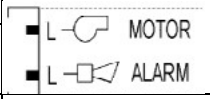		x	Fan motor contactor	AC 230 V +10 % / -15 %, 50...60 Hz, 1 A, cos.0.4
	PIN2			x	Alarm	AC 230 V +10 % / -15 %, 50...60 Hz, 1 A, cos.0.4
X3-02	PIN1	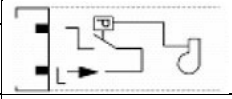	x		Air pressure switch (LP)	AC 230 V +10 % / -15 %, 50...60 Hz, Imax 1.5 mA
	PIN2			x	Power signal for air pressure switch (LP)	AC 230 V +10 % / -15 %, 50...60 Hz, Imax 500 mA
X3-03	PIN1	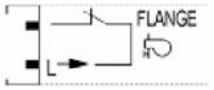	x		End switch burner flange	AC 230 V +10 % / -15 %, 50...60 Hz, Imax 5 A
	PIN2			x	Power signal for end switch burner flange	AC 230 V +10 % / -15 %, 50...60 Hz, Imax 5 A
X3-04	PIN1	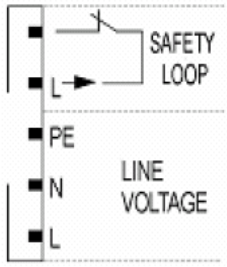	x		Safety loop	AC 230 V +10 % / -15 %, 50...60 Hz, Imax 5 A
	PIN2			x	Power signal for safety loop	AC 230 V +10 % / -15 %, 50...60 Hz, Imax 5 A
	PIN3		x		Protective earth (PE)	
	PIN4		x		Supply voltage neutral conductor (N)	
	PIN5		x		Supply voltage live conductor (L)	AC 230 V +10 % / -15 %, 50...60 Hz, fuse 6.3 AT (DIN EN 60 127 2 / 5)
X4-01		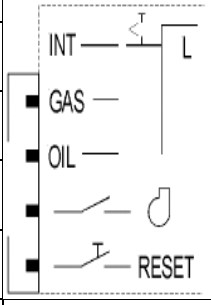			Fuel selection “internal” if pin 1-2 is not used	
	PIN1		x		Fuel selection gas	AC 230 V +10 % / -15 %, 50...60 Hz, Imax 1.5 mA
	PIN2		x		Fuel selection oil	AC 230 V +10 % / -15 %, 50...60 Hz, Imax 1.5 mA
	PIN3		x		Fan contactor contact (FCC) or flue gas recirculation pressure switch	AC 230 V +10 % / -15 %, 50...60 Hz, Imax 1.5 mA
	PIN4		x		Reset / manual lockout	AC 230 V +10 % / -15 %, 50...60 Hz, Imax 1.5 mA
X4-02	PIN1	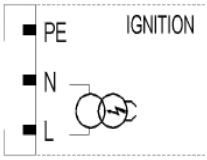		x	Protective earth (PE)	
	PIN2			x	Neutral conductor (N)	
	PIN3			x	Ignition	AC 230 V +10 % / -15 %, 50...60 Hz, 2 A, cos.0.2
X4-03	PIN1	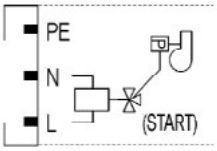		x	Protective earth (PE)	
	PIN2			x	Neutral conductor (N)	
	PIN3			x	Start signal or pressure switch relief (air pressure switch test valve)	AC 230 V +10 % / -15 %, 50...60 Hz, 0.5 A, cos.0.4

Terminal group	Connection symbol		Input	Output	Description of connection terminals	Electrical rating
X5-01	PIN1	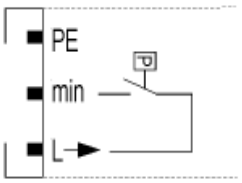		x	Protective earth (PE)	
	PIN2		x		Pressure switch min-oil (DWmin-oil)	AC 230 V +10 % / -15 %, 50...60 Hz, Imax 1.5 mA
	PIN3			x	Power signal for pressure switch-min-oil (DWmin-oil)	AC 230 V +10 % / -15 %, 50...60 Hz, Imax 500 mA
X5-02	PIN1	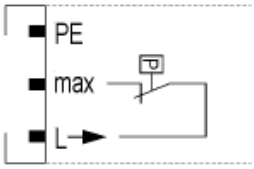		x	Protective earth (PE)	
	PIN2		x		Pressure switch-max-oil (DWmax-oil)	AC 230 V +10 % / -15 %, 50...60 Hz, Imax 1.5 mA
	PIN3			x	Power signal for pressure switch-max-oil (DWmax-oil)	AC 230 V +10 % / -15 %, 50...60 Hz, Imax 500 mA
X5-03	PIN1	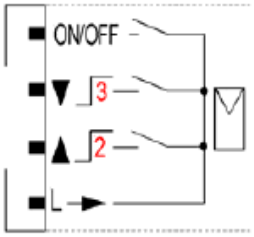	x		Controller (ON / OFF)	AC 230 V +10 % / -15 %, 50...60 Hz, Imax 1.5 mA
	PIN2		x		Controller closes / stage 3	AC 230 V +10 % / -15 %, 50...60 Hz, Imax 1.5 mA
	PIN3		x		Controller opens / stage 2	AC 230 V +10 % / -15 %, 50...60 Hz, Imax 1.5 mA
	PIN4			x	Power signal for control of con- troller	AC 230 V +10 % / -15 %, 50...60 Hz, Imax 500 mA
X6-01	PIN1	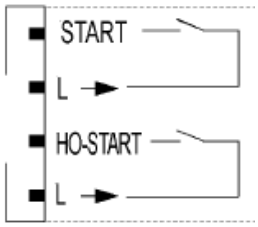	x		Start release oil	AC 230 V +10 % / -15 %, 50...60 Hz, Imax 1.5 mA
	PIN2			x	Power signal start release oil	AC 230 V +10 % / -15 %, 50...60 Hz, Imax 500 mA
	PIN3		x		Direct heavy oil start	AC 230 V +10 % / -15 %, 50...60 Hz, Imax 1.5 mA
	PIN4			x	Power signal direct heavy oil start	AC 230 V +10 % / -15 %, 50...60 Hz, Imax 500 mA
X6-02	PIN1	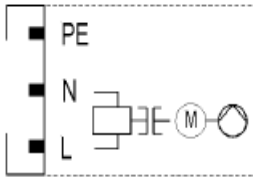		x	Protective earth (PE)	
	PIN2			x	Neutral conductor (N)	
	PIN3			x	Oil pump / magnetic coupling	AC 230 V +10 % / -15 %, 50...60 Hz, 2 A, cos.0.4
X6-03	PIN1	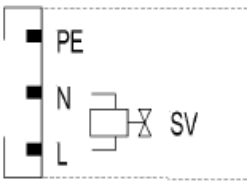		x	Protective earth (PE)	
	PIN2			x	Neutral conductor (N)	
	PIN3				Fuel valve (shutoff valve-oil)	AC 230 V +10 % / -15 %, 50...60 Hz, 1 A, cos.0.4

Terminal group	Connection symbol		Input	Output	Description of connection termi- nals	Electrical rating
X7-01	PIN1	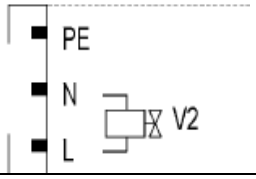		x	Protective earth (PE)	
	PIN2			x	Neutral conductor (N)	
	PIN3				Fuel valve 2 (oil)	AC 230 V +10 % / -15 %, 50...60 Hz, 1 A, cos.0.4
X7-02	PIN1	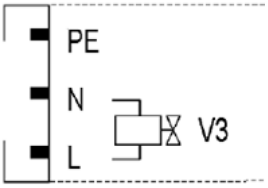		x	Protective earth (PE)	
	PIN2			x	Neutral conductor (N)	
	PIN3				Fuel valve 3 (oil)	AC 230 V +10 % / -15 %, 50...60 Hz, 1 A, cos.0.4
X7-03	PIN1	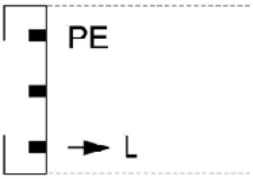		x	Protective earth (PE)	
	PIN2		x		Start release gas CPL (LMV52...)	AC 230 V +10 % / -15 %, 50...60 Hz, Imax 1.5 mA
	PIN3			x	Power signal (reserve)	AC 230 V +10 % / -15 %, 50...60 Hz, Imax 500 mA

Terminal group	Connection symbol		Input	Output	Description of connection termi- nals	Electrical rating
X8-01	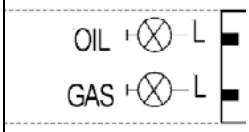	PIN2		x	Firing on oil	AC 230 V +10 % / -15 %, 50...60 Hz, 1 A, cos.0.4
		PIN1		x	Firing on gas	AC 230 V +10 % / -15 %, 50...60 Hz, 1 A, cos.0.4
X8-02	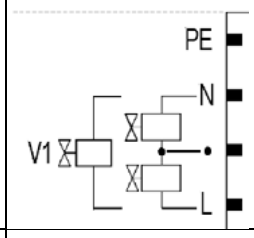	PIN4		x	Protective earth (PE)	
		PIN3		x	Neutral conductor (N)	
		PIN2		x	Wiring point for valves connected in series	
		PIN1		x	Fuel valve 1 (oil)	AC 230 V +10 % / -15 %, 50...60 Hz, 1 A, cos.0.4
X8-03	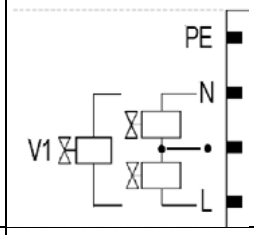	PIN4		x	Protective earth (PE)	
		PIN3		x	Neutral conductor (N)	
		PIN2		x	Wiring point for valves connected in series	
		PIN1		x	Fuel valve 1 (oil)	AC 230 V +10 % / -15 %, 50...60 Hz, 1 A, cos.0.4
X9-01	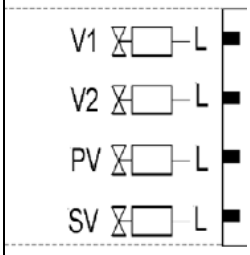	PIN4		x	Fuel valve 1 (gas)	AC 230 V +10 % / -15 %, 50...60 Hz, 2 A, cos.0.4
		PIN3		x	Fuel valve 2 (gas)	AC 230 V +10 % / -15 %, 50...60 Hz, 2 A, cos.0.4
		PIN2		x	Fuel valve (gas)	AC 230 V +10 % / -15 %, 50...60 Hz, 2 A, cos.0.4
		PIN1		x	Fuel valve (shutoff valve-(gas)	AC 230 V +10 % / -15 %, 50...60 Hz, 2 A, cos.0.4
X9-02	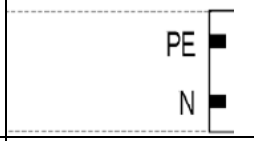	PIN2		x	Protective earth (PE)	
		PIN1		x	Neutral conductor (N)	
X9-03	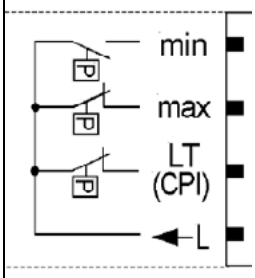	PIN4	x		Pressure switch-min-gas, start rele- ase gas	AC 230 V +10 % / -15 %, 50...60 Hz, Imax 1.5 mA
		PIN3	x		Pressure switch-max-gas (DWmax- gas)	AC 230 V +10 % / -15 %, 50...60 Hz, Imax 1.5 mA
		PIN2	x		Pressure switch-valve proving-gas / leakage test or valve closing con- tact (CPI)	AC 230 V +10 % / -15 %, 50...60 Hz, Imax 1.5 mA
		PIN1		x	Power signal for pressure switch	AC 230 V +10 % / -15 %, 50...60 Hz, Imax 500 mA

Termi- nal group	Connection symbol		Input	Output	Description of connection termi- nals		Electrical rating
X10-01	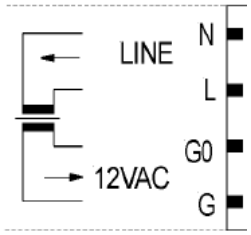	PIN4		x	Neutral conductor (N)		AC 230 V +10 % / -15 %, 50...60 Hz, max 1 mA
		PIN3		x	Power signal transformer		
		PIN2	x		AC power signal GO		AC 12 V +10 % / -15 %, 50...60 Hz, max 1.2 mA
		PIN1	x		AC power signal fan motor (G)		
X10-02	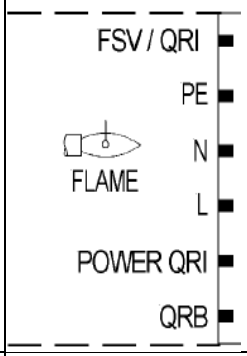	PIN6	x		QRI... (IR detector) / QRA7... signal voltage		Umax DC 5 V
		PIN5		x	Protective earth (PE)		
		PIN4		x	Neutral conductor (N)		
		PIN3		x	Power signal		AC 230 V +10 % / -15 %, 50...60 Hz, Imax 500 mA
		PIN2		x	QRI... (IR detector) / QRA7... power supply		DC 14 / 21 VC Imax 100 mA
		PIN1	x		QRB... signal voltage		Max. DC 8 V
X10-03		PIN1		x	Ionization probe (ION) (alternati- vely QRA2…/ QRA4.U/QRA10…, refer to section *Description of inputs and out- puts*)		Umax (X3-04-PINS) Imax. 0.5 mA
X50	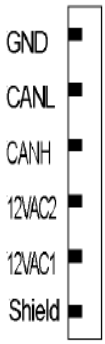	PIN6		x	Reference ground (PELV)		
		PIN5		x	Communication signal (CANL)		DC U <5 V, Rw = 120 Ù, level to ISO-DIS 11898
		PIN4		x	Communication signal (CANH)		
		PIN3		x	AC power supply for actuators / display and operating unit AZL5...		AC 12 V +10 % / -15 %, 50...60 Hz, Fuse max. 4 A
		PIN2		x	AC power supply for actuators / display and operating unit AZL5...		
		PIN1		x	Shield connec- tion	(functional earth)	
X51	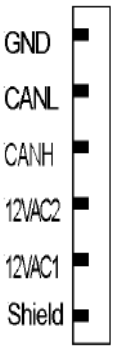	PIN6		x	Reference ground (PELV)		
		PIN5		x	Communication signal (CANL)		DC U <5 V, Rw = 120 Ù, level to ISO-DIS 11898
		PIN4		x	Communication signal (CANH)		
		PIN3		x	AC power supply for actuators / display and operating unit AZL5...		AC 12 V +10 % / -15 %, 50...60 Hz, Fuse max. 4 A
		PIN2		x	AC power supply for actuators / display and operating unit AZL5...		
		PIN1		x	Shield connec- tion	(functional earth)	

X52	FE 12VAC2 M 12VAC1	PIN4	x		(functional earth)	
		PIN3	x		AC power supply from transformer to LMV5... system	AC 12 V +10 % / -15 %, 50...60 Hz
		PIN2	x		Reference ground (PELV)	
		PIN1	x		AC power supply from transformer to LMV5... system	AC 12 V +10 % / -15 %, 50...60 Hz

Terminal group	Connection symbol		Input	Output	Description of connection termi- nals	Electrical rating
Temperature / pressure controller						
X60	FE Pt100 Pt/Ni 1000	PIN5	x		Functional earth for shield connec- tion	
		PIN4	x		Reference ground	
		PIN3	x		Temperature sensor input Pt / LG- Ni 1000	
		PIN2	x		Line compensation temperature sensorPT100	
		PIN1	x		Temperature sensor input PT100	
X61	FE 0 4-20 mA 0-10 V Power Supply Sensor	PIN5	x		Functional earth for shield connec- tion	
		PIN4	x		Reference ground	
		PIN3	x		Current input for temperature / pressure signal 0/4...20 mA	DC 0/4...20 mA
		PIN2	x		Voltage input for temperature / pressure signal DC 0...10 V	DC 0...10 V
		PIN1		x	Power supply for temperature / pressure transmitter	approx. DC 20 V Max. 25 mA
X62	FE 0 4-20 mA 0-10 V	PIN5	x		Functional earth for shield connec- tion	
		PIN4	x		Reference ground	
		PIN3	x		Current input for setpoint or load	DC 0...20 mA
		PIN2	x		Voltage input for setpoint or load	DC 0...10 V
		PIN1		x	Power supply for setpoint changeo- ver	approx. DC 24 V Max. 2 mA
X63	FE 0 4-20 mA	PIN3	x		Functional earth for shield connec- tion	
		PIN2		x	Reference ground	
		PIN1		x	Current output for burner(LOAD OUTPUT)	DC 4...20 mA, RLmax = 500 £[

Note: Specifications and data subject to change. Errors and omissions excepted.

RECOMMENDATIONS FOR LMV5x CONNECTIONS

Connections affected by EMC noises are related to the bus cable (actuator line cable, PLL52), detection probe cable, speed sensor cable, 4-20mA signal cable that controls the VSD.

Input and power cables (400V e 230V) must be laid separately from the signal cables.

The bus cable between control panel and burner and between burner and PLL52 board (used when O2 trim control must be perfomed) must be laid separately and far from power cables.
When long cables must be provided, it is recommended to put the bus cable into a pipe or a metallic sheath: the sheath ends must be grounded with suitable rings.

Provide a shielded three-pole cable type FG7OH2R+T (see Annex 1), between VSD and motor; earth must be outside the shielding.

Shielding must get to the lower part of the VSD and get to the motor junction box.
Shielding must be connected to the equipotential ground on both ends, better with suitable rings.
Otherwise, a standard cable can be used also but put inside a pipe or metallic sheath (the sheath ends must be grounded with suitable rings) and an earth external wire for the motor ground.

The cable for the 4÷20mA signal that controls the VSD, must be shielded, only LMV5x side ends connected to the equipotential terminal. If the VSD is not inside the control panel, the cable must be laid separately inside a metallic sheath earthed by means of rings.

As for the speed sensor cable and QRI detection probe cable, provide a “Ethernet “ cat.5 or 6 cable, inside a metallic sheath (with ends earthed by means of rings) and laid separately from the motor cable.
As the sensor uses three wires, divide and twist the pairs to avoid noises.
Alternatively, provide a 3x2x0,50 twisted cable Liycy type (see Annex 2).

In case of O2 trim control version, O2 probe and PLL52 board must be connected by means of a 3x2x0,50 twisted cable Liycy type (see Annex 2).

NB: *when a shielding has both ends wired to Earth, be sure they are at the same potential. If there is any Voltage difference, ground just one of the two ones, generally the one closest to the weakest, respect to EMC, component. Anyway give way to the burner control, that is wire to ground the end of the shielding closest to the LMV.*
For instance, the cable between LMV and VSD, if the shielding has only one end wired to Earth, this one has to be the one LMV side.

Annex1 – Example for motor cable

INDUSTRIA E AUTOMAZIONE

FG70H2R+T 0,6/1 kV
A RIDOTTA EMISSIONE DI ALOGENI

FG70H2R+T 0,6/1 kV
WITH REDUCED HALOGEN EMISSION

CARATTERISTICHE TECNICHE

Colore delle anime:		UNEL 00722 / VDE 0293 (Tab. 8)
Conduttori:	rame rosso elettrolitico	normativa CEI EN 60228 Cl.5 (Tabella 9)
Isolante:	elastomero silanico di qualità G7	normativa CEI 20-11 - CEI EN 50363
Separatore:	nastro poliestere-mylar	
Schermatura:	a treccia capillari di rame rosso elettrolitico cop. > 80 %	
Guaina esterna:	PVC di qualità TM2	normativa CEI 20-11 - CEI EN 50363
Colore della guaina:	Grigio RAL 7035	
Prova N.P. verticale:	su singolo conduttore o cavo isolato	normativa CEI EN 60332-1-2
Prova GAS emessi:	durante la combustione	normativa CEI EN 50267-2-1
Resistenza agli olii:		normativa CEI 20-34/0-1
Prova N.P.I.:		normativa CEI 20-22/2
Resistenza elettrica:	relativamente alla sezione	normativa CEI EN 60228 (Tabella 9)
Tens. nominale Uo/U:	0,6/1 kV	
Tensione di prova:	4000 V	
Temperatura d'esercizio:	(- 25 °C ÷ + 90 °C)	
Temperatura di corto circuito:	250 °C	
Marcatura:	BERICA CAVI S.P.A. (VI) FG70H2R + T 0,6/1 kV O.R. CEI 20-22 II CE Anno/Lotto - N° Anime x Sezione + T	
Raggio di curvatura:	minimo 15 volte diametro esterno	

TECHNICAL FEATURES

Cores colour code:		*UNEL 00722 / VDE 0293 (Tab. 8)*
Conductors :	*fine wires stranded of bare copper*	*CEI EN 60228 Cl.5 (Tab.9) rule*
Insulation:	*G7 quality rubber*	*CEI 20-11 - CEI EN 50363 rules*
Assembling:	*polyester-mylar tape*	
Shield:	*bare copper braid 80% covering*	
Outer sheath:	*TM2 quality PVC*	*CEI 20-11 - CEI EN 50363 rules*
Sheath colour code:	*Grey RAL 7035*	
Vertical fire retardant test:	*on single conductor or insulated cable*	*CEI EN 60332-1-2 rule*
Emission GAS test:	*during the combustion*	*CEI EN 50267-2-1 rule*
Oil resistant test:		*CEI 20-34/0-1 rule*
Flame retardant test:		*CEI 20-22/2 rule*
Electric resistance:	*according to*	*CEI EN 60228 (Tab. 9)*
Working voltage:	*0,6/1 kV*	
Testing voltage:	*4000 V*	
Working temperature:	*(-25 °C ÷ +90 °C)*	
Short circuit temperature:	*250 °C*	
Outer printing:	*BERICA CAVI S.P.A. (VI) FG70H2R + T 0,6/1 kV O.R. CEI 20-22 II CE - Year/Lot - Nr. of cond. by cross sect. + T.*	
Bending radius:	*cable outer diameter x 15*	

FG70H2R+T 0,6/1 kV
A RIDOTTA EMISSIONE DI ALOGENI

FG70H2R+T 0,6/1 kV
WITH REDUCED HALOGEN EMISSION

TIPO *TYPE*	Ø ESTERNO MEDIO *MEDIUM Ø OUTER*	PESO MEDIO *MEDIUM WEIGHT*	CODICE PRODOTTO *ITEM CODE*
n° x mm²	mm	kg x km	
3x1,5 + 1G1,5	10,8	173,0	B5803150
3x2,5 + 1G2,5	12,6	254,0	B5803250
3x4 + 1G4	15,3	365,0	B5803400
3x6 + 1G6	17,4	497,0	B5803600
3x10 + 1G10	20,6	730,0	B58031000
3x16 + 1G16	24,8	1095,0	B58031600
3x25 + 1G25	30,1	1680,0	B58032500

TIPO *TYPE*	Ø ESTERNO MEDIO *MEDIUM Ø OUTER*	PESO MEDIO *MEDIUM WEIGHT*	CODICE PRODOTTO *ITEM CODE*
n° x mm²	mm	kg x km	

Annex 2 – Example for sensor cable

CAVI TIPO "Li-YCY-P"
A COPPIE SCHERMATI A TRECCIA

IMPIEGO: Cavi schermati per segnali e trasmissione dati per applicazioni in elettronica ed informatica, efficaci contro le interferenze elettromagnetiche ed atti ad offrire una protezione contro influenze capacitive dovute a campi elettrici.

CABLES TYPE "Li-YCY-P"
TWISTED PAIRS, TINNED COPPER BRAID SHIELD

STANDARD USE: Signal and data transmission shielded cables for electronics and information technology applications, effective against electromagnetic interferences and suited to offer protection against capacitive influences due to electric fields.

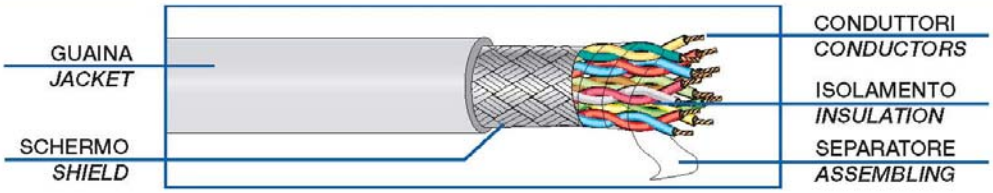

CARATTERISTICHE TECNICHE		*TECHNICAL FEATURES*
CONDUTTORI: Flessibili in rame rosso sec. CEI 20-29 (IEC 228) Cl. 5, VDE 0295 Cl. 5, NF C32-013 (0,34 mm² : VDE 0295 Cl.2)		***CONDUCTORS:*** *Flexible bare copper conductors* *CEI 20-29 (IEC 228) Cl. 5, VDE 0295 Cl. 5,* *NF C32-013 Ref. (0,34 mm² : VDE 0295 Cl.2)*
ISOLANTE: Polivinilcloruro (PVC) Sec. CEI 20-11 Cl. R2, VDE 0207 Cl. YI2 Codici colori: a norma DIN 47100		***INSULATION:*** *Polyvinylchloride (PVC)* *CEI 20-11 Cl. R2, VDE 0207 Cl. YI2 Ref.* *Colour code according to DIN 47100*
SEPARATORE: Nastro di poliestere		***ASSEMBLING:*** *Polyester tape helically wound*
SCHERMATURA: A treccia di rame stagnato Cordina di continuità a richiesta		***SHIELD:*** *Tinned copper braid* *On request with drain wire*
GUAINA ESTERNA: Polivinilcloruro (PVC) Sec. CEI 20-20 Cl. TM2, VDE 0207 Cl. YM2 colore: grigio (diverso a richiesta)		***JACKET:*** *Polyvinylchloride (PVC)* *CEI 20-20 Cl. TM2, VDE 0207 Cl. YM2 Ref.* *colour: grey or on request*
RESISTENZA ELETTRICA DEI CONDUTTORI: 0,14 mm²: <148 Ohm/Km 0,25 mm²: <79 Ohm/Km 0,34 mm²: <55 Ohm/Km 0,50 mm²: <39 Ohm/Km 0,75 mm²: <26 Ohm/Km 1mm²: <19,5 Ohm/Km		***ELECTRICAL CONDUCTOR RESISTANCE:*** *0,14 mm²: <148 Ohm/Km* *0,25 mm²: <79 Ohm/Km* *0,34 mm²: <55 Ohm/Km* *0,50 mm²: <39 Ohm/Km* *0,75 mm²: < 26 Ohm/Km* *1 mm²: <19,5 Ohm/Km*
TEMPERATURA DI ESERCIZIO: posa fissa: -25°C + 70°C posa mobile: -15°C + 70°C		***WORKING TEMPERATURE:*** *fixed installation: -25°C + 70°C* *flexing: -15°C + 70°C*
RAGGIO DI CURVATURA: 15 volte il diametro del cavo		***BENDING RADIUS:*** *15 times overall diameter of cable*
TENSIONE DI ESERCIZIO: 250 V		***WORKING VOLTAGE:*** *250 V*
TENSIONE DI PROVA: 1500 V		***TEST VOLTAGE:*** *1500 V*

CAVI TIPO "Li-YCY-P"
A COPPIE SCHERMATI A TRECCIA

CABLES TYPE "Li-YCY-P"
TWISTED PAIRS, TINNED COPPER BRAID SHIELD

PROVA N.P. FIAMMA:
Standard: sec. CEI 20-35 (IEC 332.1)
A richiesta: sec. CEI 20-22 II (IEC 332.3A)

FLAME RETARDANT TEST:
Standard: CEI 20-35 (IEC 332.1) Ref.
On request: CEI 20-22 II (IEC 332.3A) Ref.

IMPEDENZA DI TRASFERIMENTO:
max 200 mohm/m (f<10MHz)

SURFACE TRANSFER IMPEDANCE:
max 200 mohm/m (f<10MHz)

CAPACITA' DI LAVORO:
cond/cond: 120 nF/km (nom.)
cond/sch: 180 nF/km (nom.)

CAPACITANCE:
cond/cond: 120 nF/km (nom.)
cond/shield: 180 nF/km (nom.)

CODICE *CODE*	FORMAZIONE *TYPE*	ø esterno medio *outer diameter ø*	Peso medio Kg/Km *Medium weight Kg/Km*
28.204.1.02.1.000	2x2x0.14	5.6	40.0
28.204.1.03.1.000	3x2x0.14	5.9	47.0
28.204.1.04.1.000	4x2x0.14	6.2	61.0
28.204.1.05.1.000	5x2x0.14	7.2	68.0
28.204.1.06.1.000	6x2x0.14	7.6	76.0
28.204.1.07.1.000	7x2x0.14	7.6	82.0
28.204.1.08.1.000	8x2x0.14	8.4	90.0
28.204.1.10.1.000	10x2x0.14	9.8	118.0
28.204.1.12.1.000	12x2x0.14	10.2	130.0
28.204.1.16.1.000	16x2x0.14	11.2	160.0
28.204.1.18.1.000	18x2x0.14	11.7	186.0
28.204.1.20.1.000	20x2x0.14	12.4	200.0
28.204.1.25.1.000	25x2x0.14	14.0	273.0

CODICE *CODE*	FORMAZIONE *TYPE*	ø esterno medio *outer diameter ø*	Peso medio Kg/Km *Medium weight Kg/Km*
28.204.1.02.4.000	2x2x0.34	7.3	68.0
28.204.1.03.4.000	3x2x0.34	7.8	82.0
28.204.1.04.4.000	4x2x0.34	8.6	96.0
28.204.1.05.4.000	5x2x0.34	10.0	110.0
28.204.1.06.4.000	6x2x0.34	10.6	130.0
28.204.1.07.4.000	7x2x0.34	10.6	145.0
28.204.1.08.4.000	8x2x0.34	11.5	150.0
28.204.1.10.4.000	10x2x0.34	13.0	190.0
28.204.1.12.4.000	12x2x0.34	13.5	220.0
28.204.1.16.4.000	16x2x0.34	15.2	250.0
28.204.1.18.4.000	18x2x0.34	16.0	275.0
28.204.1.20.4.000	20x2x0.34	17.1	290.0
28.204.1.25.4.000	25x2x0.34	19.5	400.0

28.204.1.02.3.000	2x2x0.25	5.8	54.0
28.204.1.03.3.000	3x2x0.25	7.0	65.0
28.204.1.04.3.000	4x2x0.25	7.3	89.0
28.204.1.05.3.000	5x2x0.25	8.0	99.0
28.204.1.06.3.000	6x2x0.25	9.0	114.0
28.204.1.07.3.000	7x2x0.25	9.0	120.0
28.204.1.08.3.000	8x2x0.25	9.6	126.0
28.204.1.10.3.000	10x2x0.25	10.3	160.0
28.204.1.12.3.000	12x2x0.25	11.4	171.0
28.204.1.16.3.000	16x2x0.25	13.1	238.0
28.204.1.18.3.000	18x2x0.25	13.6	248.0
28.204.1.20.3.000	20x2x0.25	14.2	275.0
28.204.1.25.3.000	25x2x0.25	16.4	340.0

28.204.1.02.5.000	2x2x0.50	7.6	75.0
28.204.1.03.5.000	3x2x0.50	9.0	125.0
28.204.1.04.5.000	4x2x0.50	10.0	140.0
28.204.1.05.5.000	5x2x0.50	10.8	160.0
28.204.1.06.5.000	6x2x0.50	11.7	190.0
28.204.1.07.5.000	7x2x0.50	11.7	220.0
28.204.1.08.5.000	8x2x0.50	14.0	250.0
28.204.1.10.5.000	10x2x0.50	15.0	300.0
28.204.1.12.5.000	12x2x0.50	15.7	345.0
28.204.1.16.5.000	16x2x0.50	17.6	450.0

CAVI TIPO "Li-YCY-P"
A COPPIE SCHERMATI A TRECCIA

CABLES TYPE "Li-YCY-P"
TWISTED PAIRS, TINNED COPPER BRAID SHIELD

CODICE *CODE*	FORMAZIONE *TYPE*	ø esterno medio *outer diameter ø*	Peso medio Kg/Km *Medium weight Kg/Km*
28.204.1.02.6.000	2x2x0.75	8.6	103.0
28.204.1.03.6.000	3x2x0.75	9.0	128.0
28.204.1.04.6.000	4x2x0.75	10.6	167.0
28.204.1.05.6.000	5x2x0.75	12.0	215.0
28.204.1.06.6.000	6x2x0.75	12.8	240.0
28.204.1.07.6.000	7x2x0.75	12.8	265.0
28.204.1.08.6.000	8x2x0.75	14.6	306.0
28.204.1.10.6.000	10x2x0.75	16.0	355.0
28.204.1.12.6.000	12x2x0.75	17.0	405.0
28.204.1.16.6.000	16x2x0.75	20.5	565.0

CODICE *CODE*	FORMAZIONE *TYPE*	ø esterno medio *outer diameter ø*	Peso medio Kg/Km *Medium weight Kg/Km*
28.204.1.02.7.000	2x2x1	9.4	122.0
28.204.1.03.7.000	3x2x1	11.5	179.0
28.204.1.04.7.000	4x2x1	12.8	237.0
28.204.1.05.7.000	5x2x1	13.8	297.0

Appendix: Example for wiring, earthing and shielding the LMV5-System

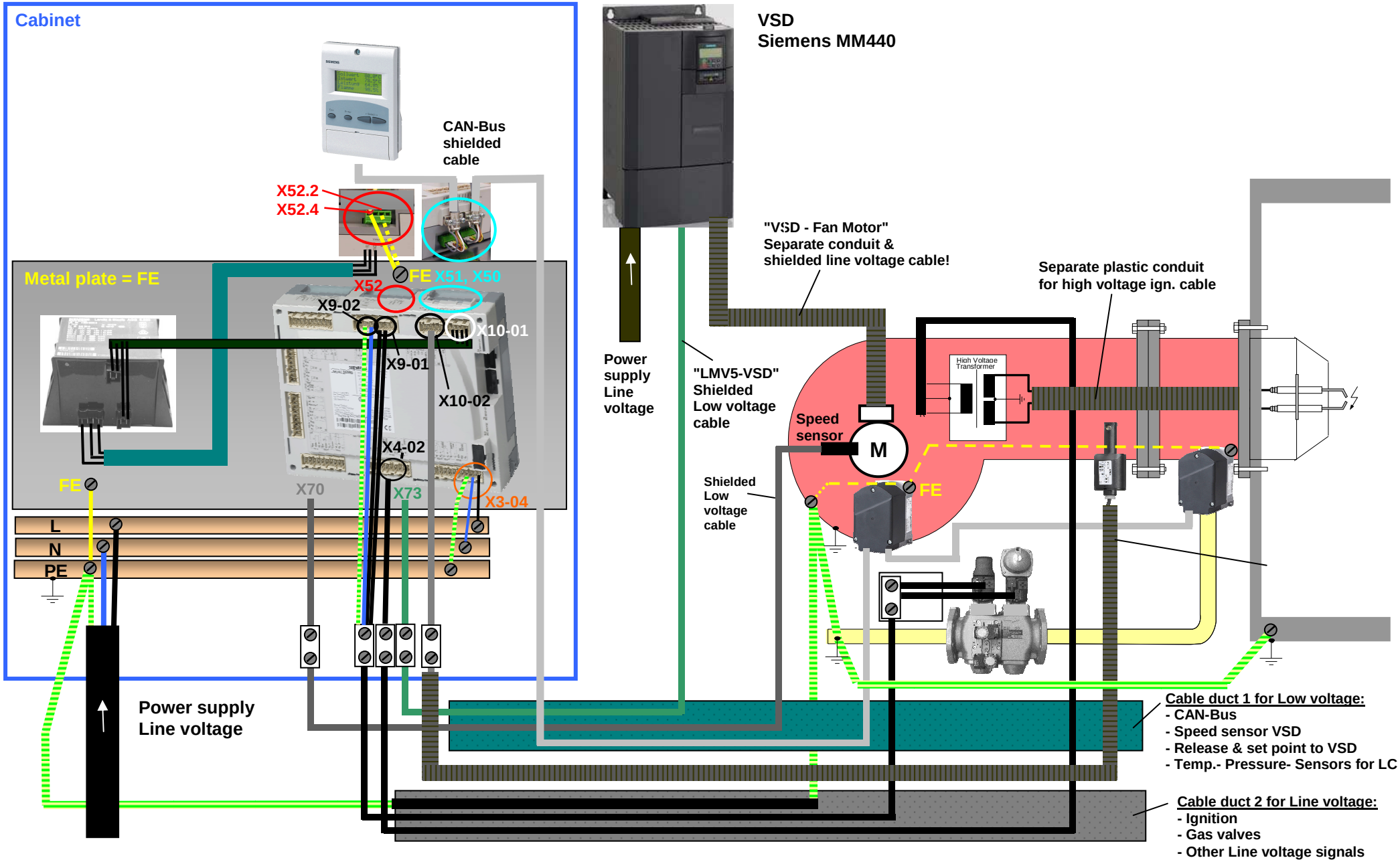

Addendum 4: LMV52... with O2 trim control and O2 module

General

The LMV52... system is an extended LMV51... system. A special feature of the LMV52… is control of the residual oxygen content to increase the boiler's efficiency.

In addition to the features of the LMV51..., the LMV52... provides O2 trim control, control of a maximum of 6 actuators, control of a VSD, and acquisition of cumulated fuel consumption and current fuel throughput. The LMV52... system uses an O2 sensor (QGO20...), an external O2 module, and the standard components of the LMV51... system.

ATTENTION: for the proper burner adjustment, it is necessary to install a fuel meter for each burner.

The PLL... O2 module is a detached measuring module for the QGO20... sensor and for 2 temperature sensors (Pt1000 / LG-Ni 1000). The module communicates with the LMV52… via CAN bus.

The fuel meters must be connected directly to the fuel-related inputs of the basic unit. On the AZL5... display and operating unit, the individual consumption values can be read out and the meter readings can be reset.

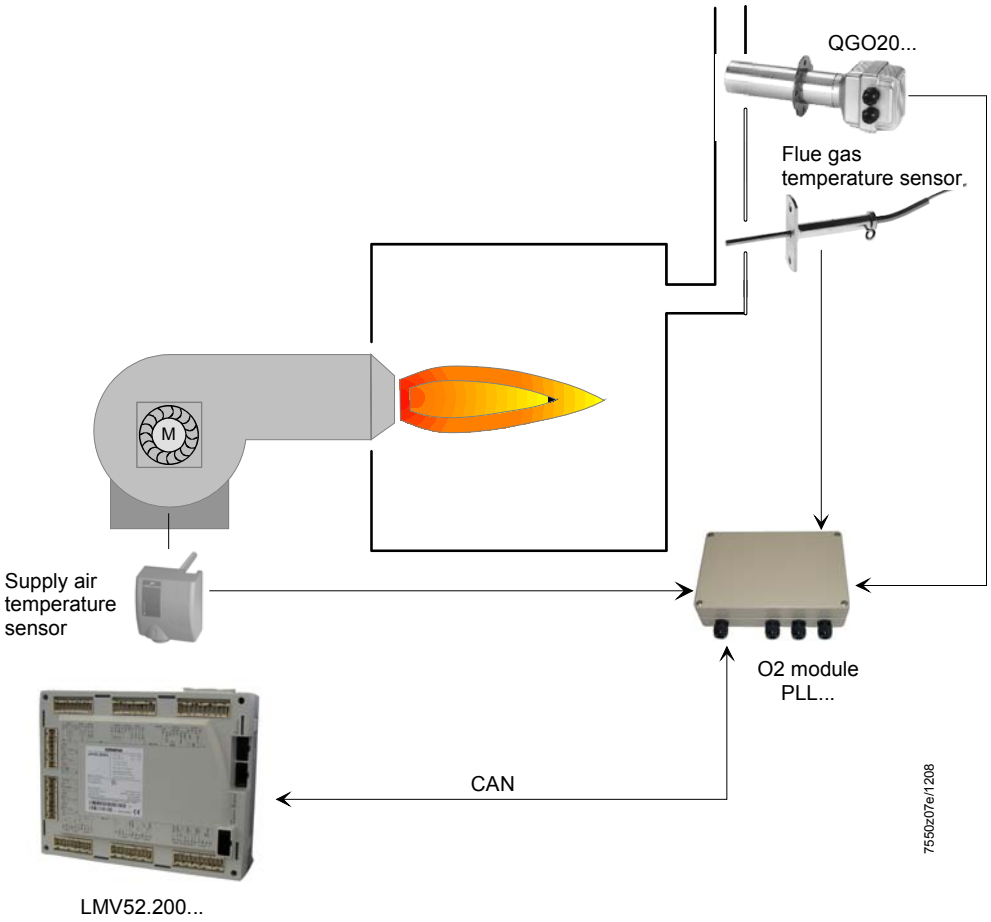

Determination of the maximum cable length

The maximum cable length between transformer and CAN bus users is dependent on the type of cable (cross-sectional area), the number of actuators and the type of actuator used (current).
The following graphs can be used to determine the maximum CAN bus cable lengths between the transformer and group of actuators or the AZL5…, depending on the relevant influencing factors.
The assumption was made that the actuators within the group are close to one another.
The **minimum** cross-sectional area for the system examples shown results from the start of the curve.
The **maximum** cable lengths for the defined system cables AGG5.641 and AGG5.631 result from the points of intersection in the graph.

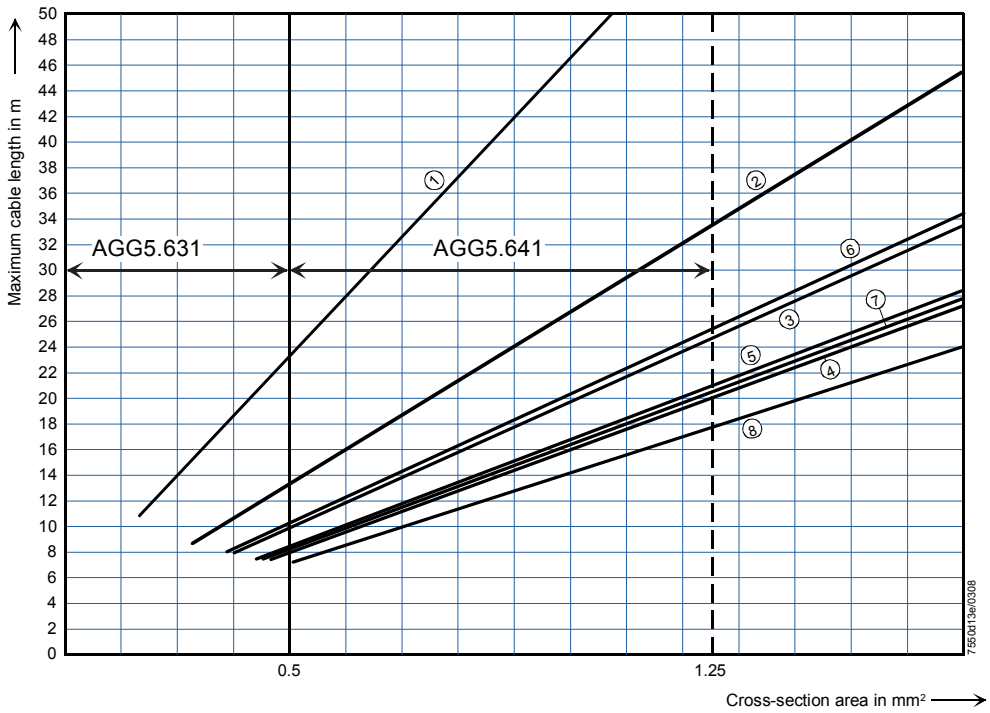

AGG5.631 (cable type 2)
AGG5.641 (cable type 1)

①	1 x SQM45...	⑤	2 x SQM48...
②	2 x SQM45...	⑥	1 x SQM45... + 1 x SQM48...
③	3 x SQM45...	⑦	2 x SQM45... + 1 x SQM48...
④	4 x SQM45...	⑧	3 x SQM45... + 1 x SQM48...

CAN bus connection between transformer and actuator group

When connecting a PLL52... O2 module, the maximum permissible cable length of a network is to be reduced by 2 m.

Example: - System cable: AGG5.641 (connecting cable to the actuators)
- Actuators: 2 x SQM45...

The point of intersection of the vertical line for the AGG5.641 (1.25 mm^2) and curve ① (2 x SQM45...) gives a maximum cable length of 33.4 m between the transformer and the group of actuators.

Example 1

Installation of all components in the burner;
CAN bus cable «LMV5... →shielding last actuator » 20 m

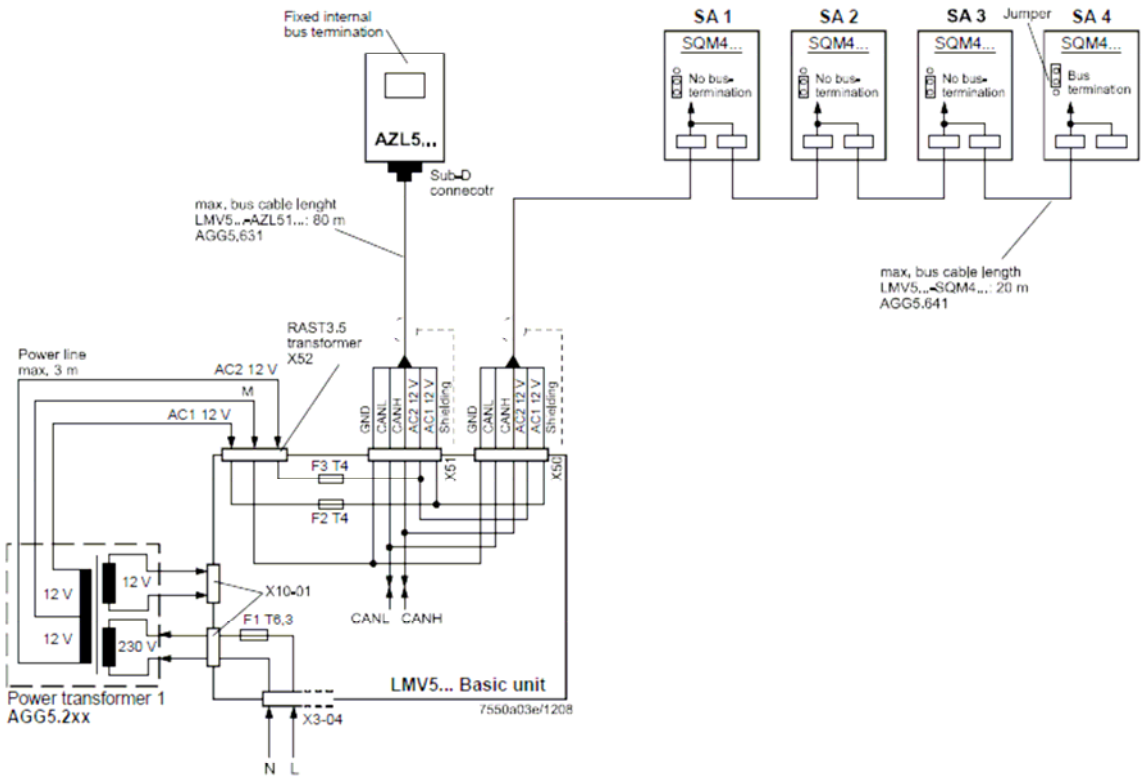

Note on example 1 **Total length of CAN bus cable ≤ 100 m**

Example 2

LMV5... basic unit in the control panel, actuator on the burner; CAN bus cable «LMV5... → SA» > 20 m

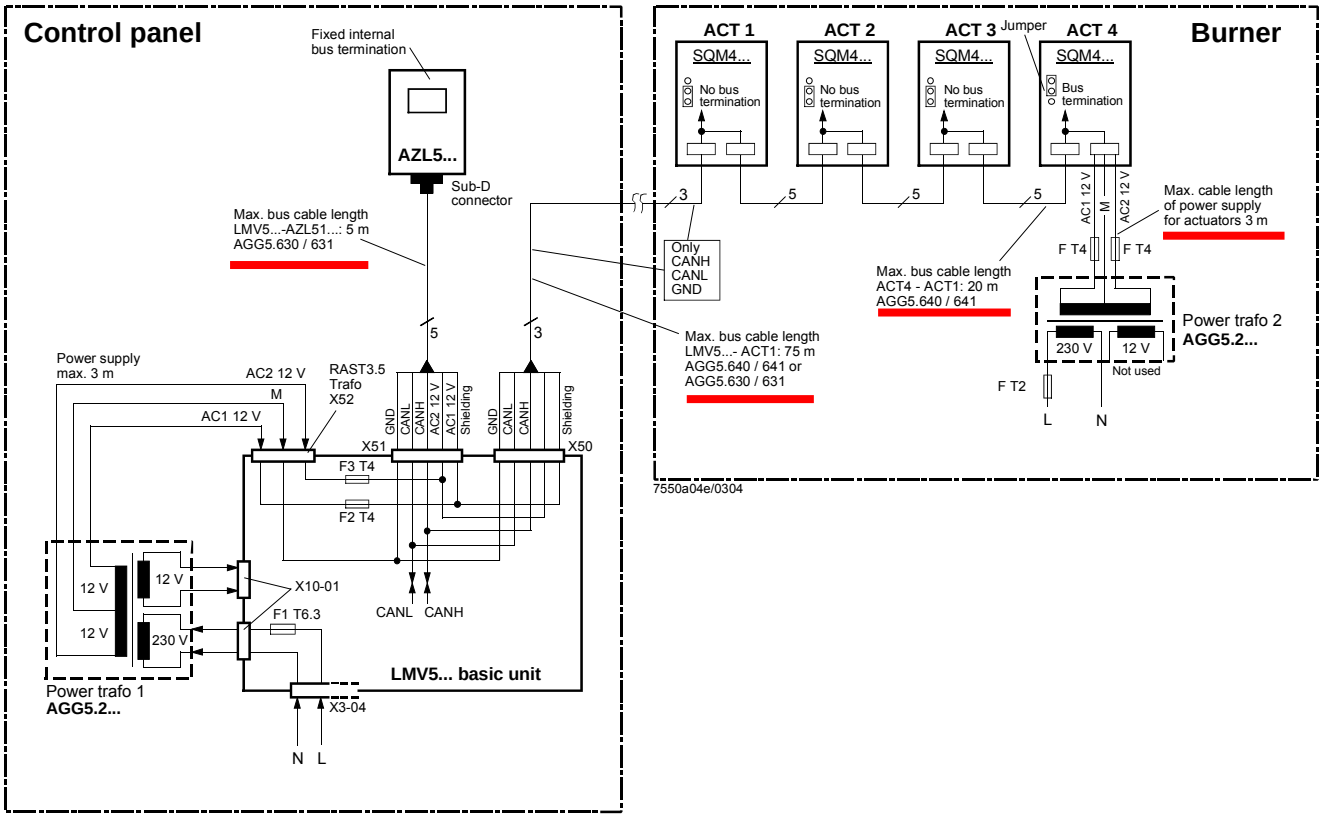

Notes on example 2

Total length of CAN bus cable ≤ 100 m

Whenever the distance between the LMV5... and the last actuator exceeds 20 m, or if more than one SQM48 is used on the burner (refer to sizing chart “Determination of maximum cable length“), a second transformer is required for powering the actuators.

In that case, transformer 1 powers the LMV5... basic unit and the AZL5... display and operating unit (**Fig. 1**). Transformer 2 powers the actuators (**Fig. 2**).

With the CAN bus cable connections from the LMV5... (**Fig. 1**) to the first actuator (**Fig. 2**), the 2 voltages AC1 and AC2 on the LMV5... side must **not** be connected and only cables CANH, CANL and M (+shielding) are to be connected to the first actuator (**Fig. 2**).

In that case, the actuators must be powered by a second transformer which to be located near the actuators.

The power from that transformer (lines AC1, AC2, M) must be fed to the actuator (ACT4 in the example above) and then connected through via bus cable AGG5.640 (cable type 1) to all the other actuators.

The fuses required for transformer 1 are accommodated in the LMV5... basic unit.

For transformer 2, these 3 fuses must be located close to the transformer (for type, refer to Basic Documentation P7550).

Example 3a

Installation of all components in the burner;
CAN bus cable «LMV52... ↔ SA» > 20 m with 6 actuators and O2 module PLL52...

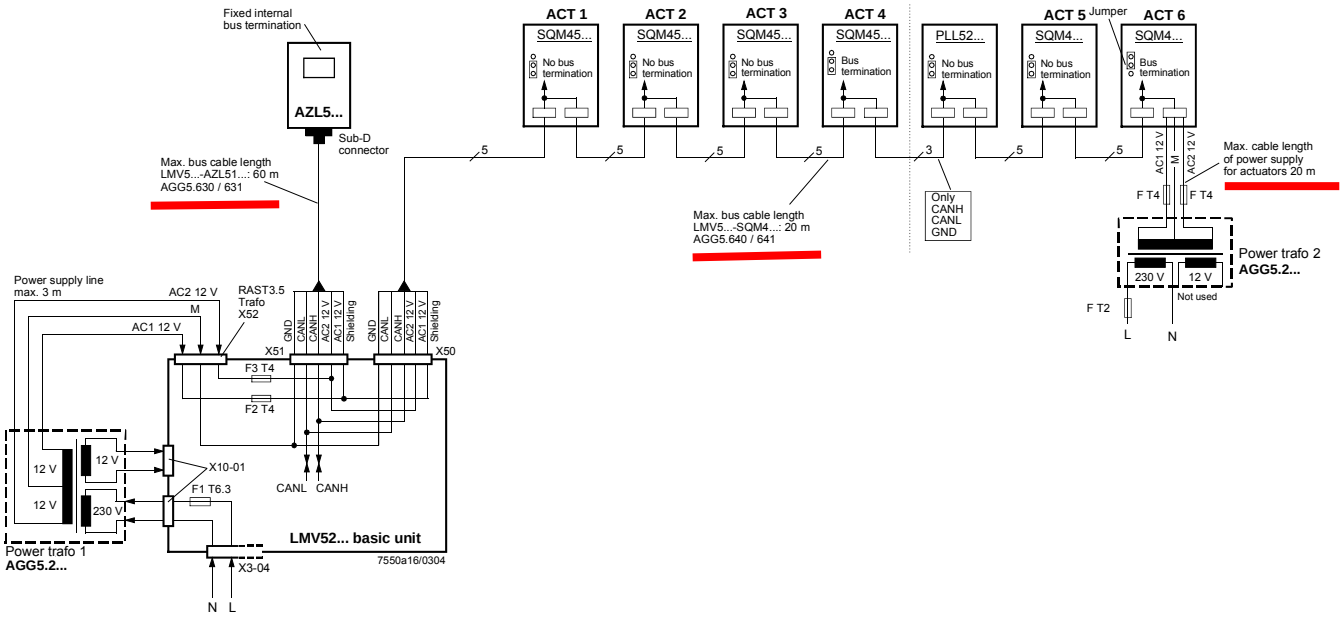

Example 3b

Installation in the control panel, actuator on the burner;
CAN bus cable «LMV52... ↔ SA» > 25 m with 4 actuators and O2 module PLL52...

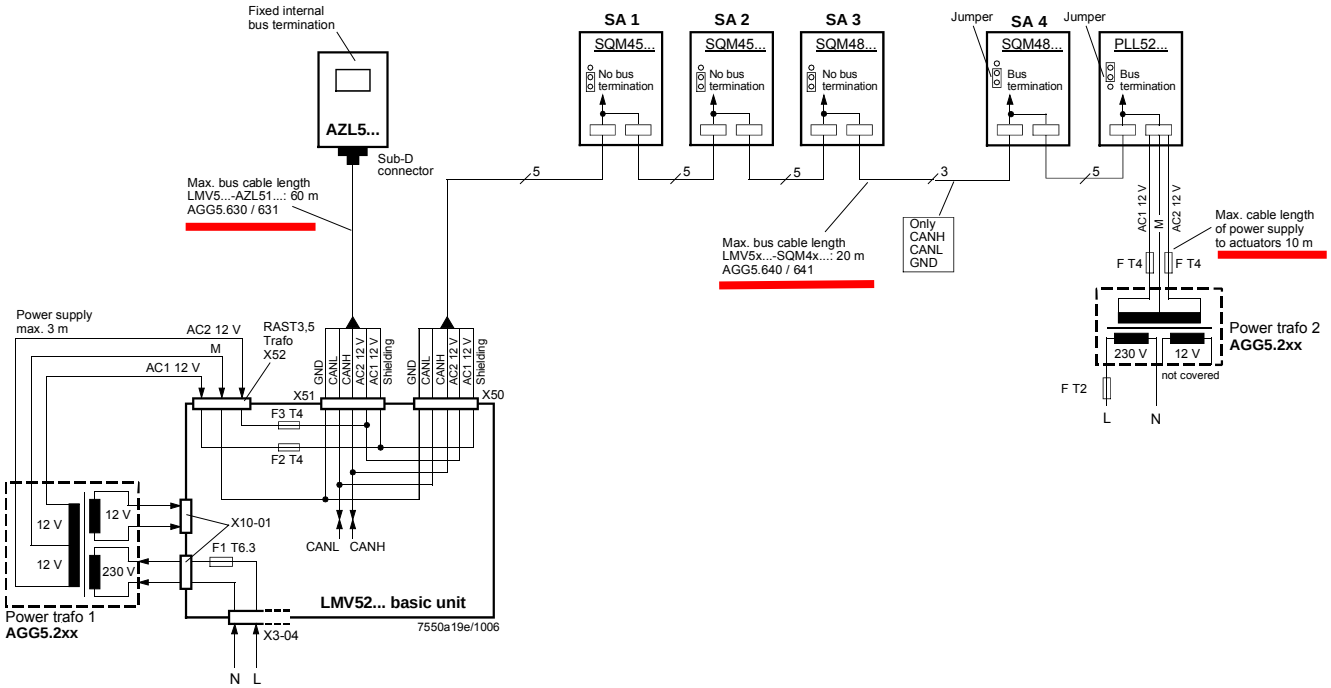

Notes on example 3a / 3b

CAN bus cable with LMV52... and more than 4 actuators and O2 module PLL52...

On LMV52... applications with more than 4 actuators (SQM45...), a second transformer is required for powering the extra actuators.

In that case, transformer 1 powers the LMV52... basic unit, the **AZL5...**, and the first 4 actuators.

Interrupt the connection between the components at a suitable location. On the actuator side, the 2 voltages AC1 and AC2 must **not** be connected but only lines «CANH, CANL and M» (+shield) to the O2 module and the other actuator.

In that case, the actuators (SA5, SA6) and the O2 module must be powered by a second transformer to be located near the actuators and the O2 module.

Connect the power supply line from that transformer to the O2 module PLL52… (in example 3a «SA6» / in example 3b «Auxiliary terminal) (lines AC1, AC2, M) and from there, via bus cable AGG5.640 (cable type 1), through to the second actuator (SA) and the O2 module.
The fuses required for transformer 1 are accommodated in the LMV52... basic unit.

Optionally, the supply voltage can also be delivered via a conduit box and fed into the connecting line between SA4 and PLL52…

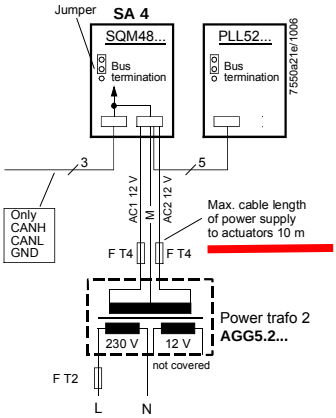

For transformer 2, the OEM must fit the 3 fuses close to the transformer.

O2 module

In comparison with the LMV51... system, the extra components to be connected with the LMV52… system are the O2 module and the O2 sensor QGO... and, optionally, the combustion air and flue gas temperature sensors. The O2 module is to be connected to the basic unit via the CAN bus. The O2 module must be located in the vicinity of the QGO... (< 10 m), aimed at keeping interference on the sensitive detector lines as low as possible. For sensor heating, the O2 module requires a separate mains connection facility.

18.8.1 Inputs and outputs

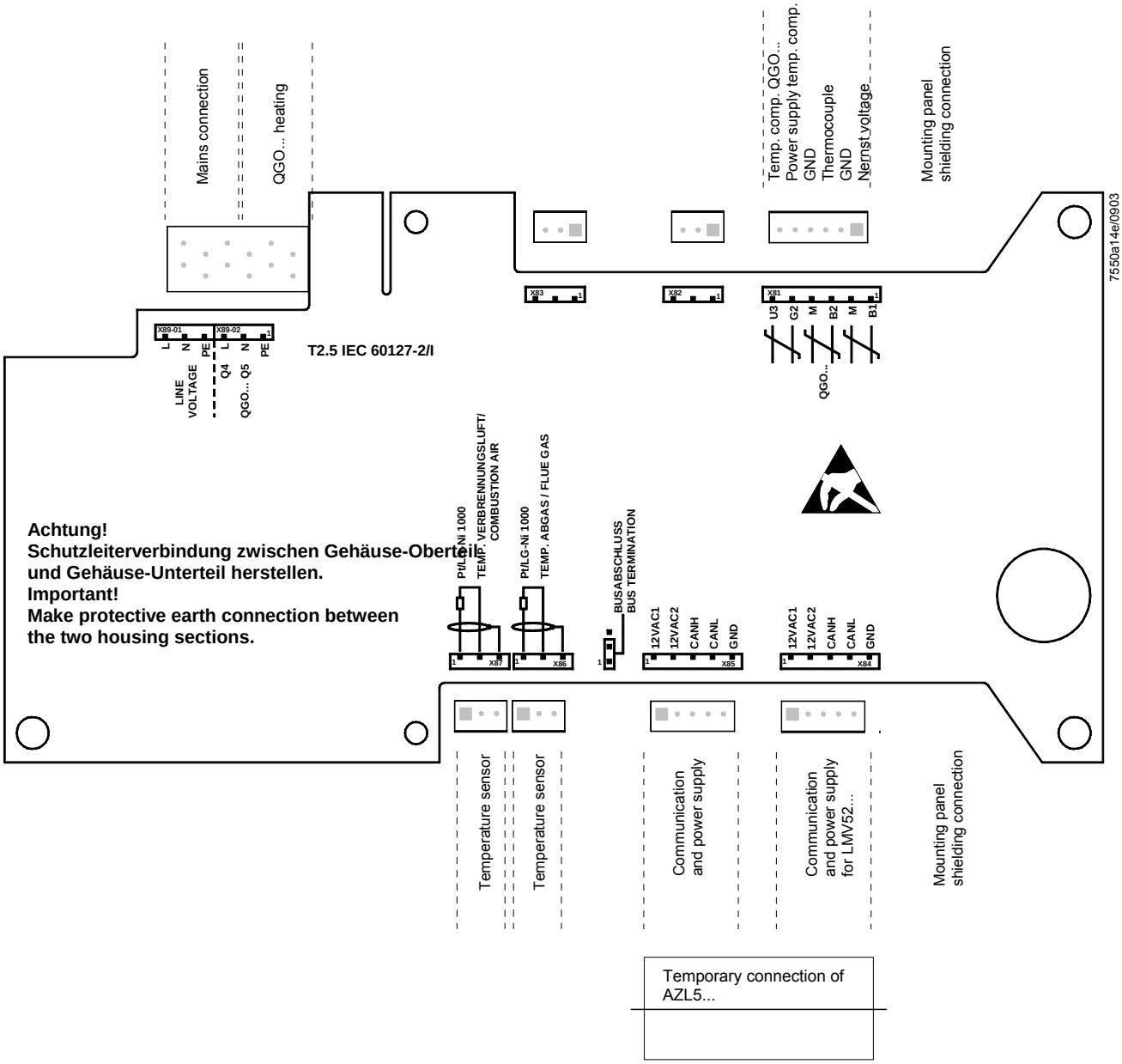

QGO20...

Montageanleitung
Mounting instruction
Instruction de montage
Monteringsanvisning
Montage-aanwijzing
Istruzioni di montaggio
Asennusohje
Instrucciones de montaje
Monteringsinstruktion
Montasjeanvisning

7842mb01/1200

Fühler aus Keramik - zerbrechlich
Ceramic detector - fragile
Sonde en céramique - fragile

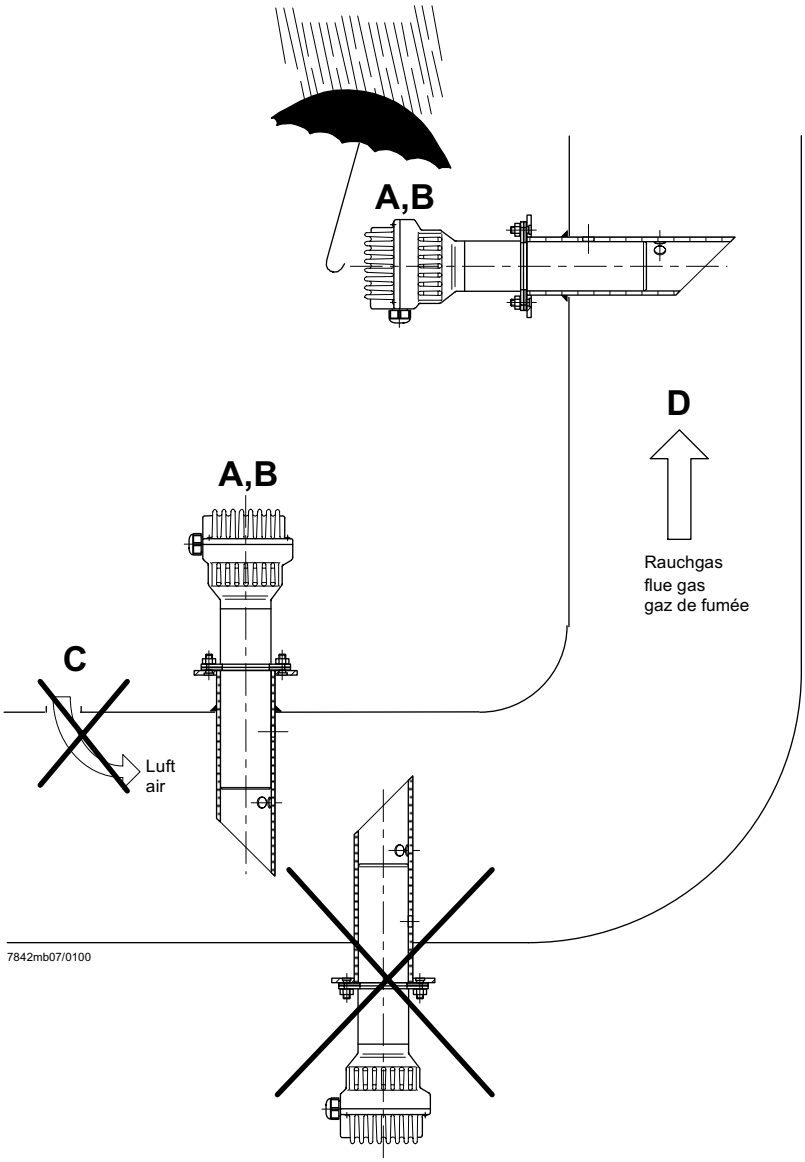

7842mb07/0100

O2-Fühler QGO20... und Rauchgassammler AGO20...

Voraussetzungen für eine korrekte messtechnische Erfassung des O2-Gehaltes der Rauchgase:

A - QGO20... **nur** mit Rauchgassammler AGO20... einsetzen

B - Einbauort des QGO20... so nahe am Brenner wie möglich, in einem Bereich ohne Turbulenzen und Inhomogenitäten. Nicht direkt im Bereich von Klappen oder Bögen montieren. Idealer Abstand: 5 x Kamindurchmesser.

C - Zwischen Brenner und Fühler darf keine Luft in die Rauchgase gelangen.

D - Strömungsgeschwindigkeit 1...10 m/s. Rauchgastemperatur am Messort ⩽ 300°C

O2-detector type QGO20... and flue gas collector type AGO20...

Presupposition for the correct measurement of the O2 content of the flue gases:

A - Use QGO20... **only** with flue gas collector type AGO20...

B - Mounting position of the QGO as close as possible to the burner, in a homogenous area without any turbulences. Do not mount the QGO20... in the area of dampers or curves. Ideal distance: Five times the diameter of the stack.

C - No air must be allowed to join the flue gases on their way from the burner to the detector.

D - Flow velocity 1...10 m/s. Flue gas temperature at the measuring position ⩽ 300°C

Sonde O2 QGO20... et collecteur des gaz de fumée AGO20...

Conditions requises pour une détection correcte de la teneur en O2 des gaz de fumée:

A - Utiliser le QGO20... **exclusivement** avec le collecteur des gaz de fumée AGO...

B - Lieu de montage du QGO20... le plus près possible du brûleur, dans un domaine homogène sans turbulences. Ne pas le monter dans le domaine des clapets ou dans les courbes. Distance idéale: Cinq fois le diamètre de la cheminée.

C - Entre le brûleur et la sonde, il ne doit pas pénétrer d´air dans les gaz de fumée.

D - Vitesse d´ecoulement 1...10 m/s. Température des gaz fumée au lieu de la mesure ⩽ 300°C

Anschluss-Schema

6-adriges abgeschirmtes Kabel. Adern möglichst paarweise verdrillt. Abschirmung an Klemme GND des RPO... . Abschirmung nicht mit Schutzleiter oder M verbinden!

Anschlusskabel z.B.:

LifYCY	6 x 2 x 0,20 / 22 oder
LiYCY	6 x 2 x 0,20
B1 (+)	Signal O2-Messzelle
M (-)	Masse für B1, B2
B2 (+)	Thermoelement-Spannung
M (-)	
U3 (+)	Signal Temperaturkompensations-element
G2 (-)	Speisung Temperaturkompensations-element
GND	Masse für Anschirmung

3 x 1,5 mm^2:

Q4	Fühlerheizung (AC 230 V)
Q5	Fühlerheizung (AC 230 V)

⏚ Erde*

Vorsicht bei den Anschlüssen U3 und G2!
Ein Fehlverdrahten der Anschlüsse führt zu einem Ausfall des Kompensationselementes.

* Am RPO... steht nur 1 Erdleiterklemme zur Verfügung. Beide Erdleiter müssen auf **eine** Klemme geführt werden.

Wiring diagram

Shielded 6-core cable. Wires should be twisted in pairs. Screen must be connected to terminal GND of the RPO... . Do not connect the shielding to the protective earth or M!

Connecting cable e.g.:

LifYCY	6 x 2 x 0,20 / 22 or
LiYCY	6 x 2 x 0,20
B1 (+)	Signal from O2-measuring cell
M (-)	Ground for B1, B2
B2 (+)	Thermocouple voltage
M (-)	
U3 (+)	Signal from temperatue compensation element
G2 (-)	Power supply for temperature compensation element
GND	Ground for screening

3 x 1,5 mm^2:

Q4	QGO... detector heating (AC 230 V)
Q5	QGO... detector heating (AC 230 V)

⏚ Earth*

Caution when connecting U3 and G2!
Faulty wiring leads to failure of the compensation element.

* At the RPO..., there is only 1 earth terminal available. Both earth wires must be connected to **the same** earth terminal.

Schéma de raccordement

Câble blindé à 6 brins. Brins torsadés si possible par paires. Blindage sur la borne GND du RPO... . Ne pas connecter le blindage avec le conducteur de protection ou M!

Câble de raccordement p.ex.:

LifYCY	6 x 2 x 0,20 / 22 ou
LiYCY	6 x 2 x 0,20
B1 (+)	Signal de la cellule de mesure d´O2
M (-)	Masse pour B1, B2
B2 (+)	Tension de thermocouple
M (-)	
U3 (+)	Signal de l´élément de cpmpensation de température
G2 (-)	Alimentation de l´élément de compensation de température
GND	Masse du blindage

3 x 1,5 mm^2:

Q4	Chauffage de sonde QGO... (AC 230 V)
Q5	Chauffage de sonde QGO... (AC 230 V)

⏚ Terre*

Prière de faire attention lors des raccordements U3 et G2. Une erreur de câblage des fils de raccordement conduit à une destruction de l´élément de compensation.

* Le RPO... ne dispose que d´une seule borne de mise à la terrre. Les deux fils de mise à la terre doivent être connectés sur **la même** borne.

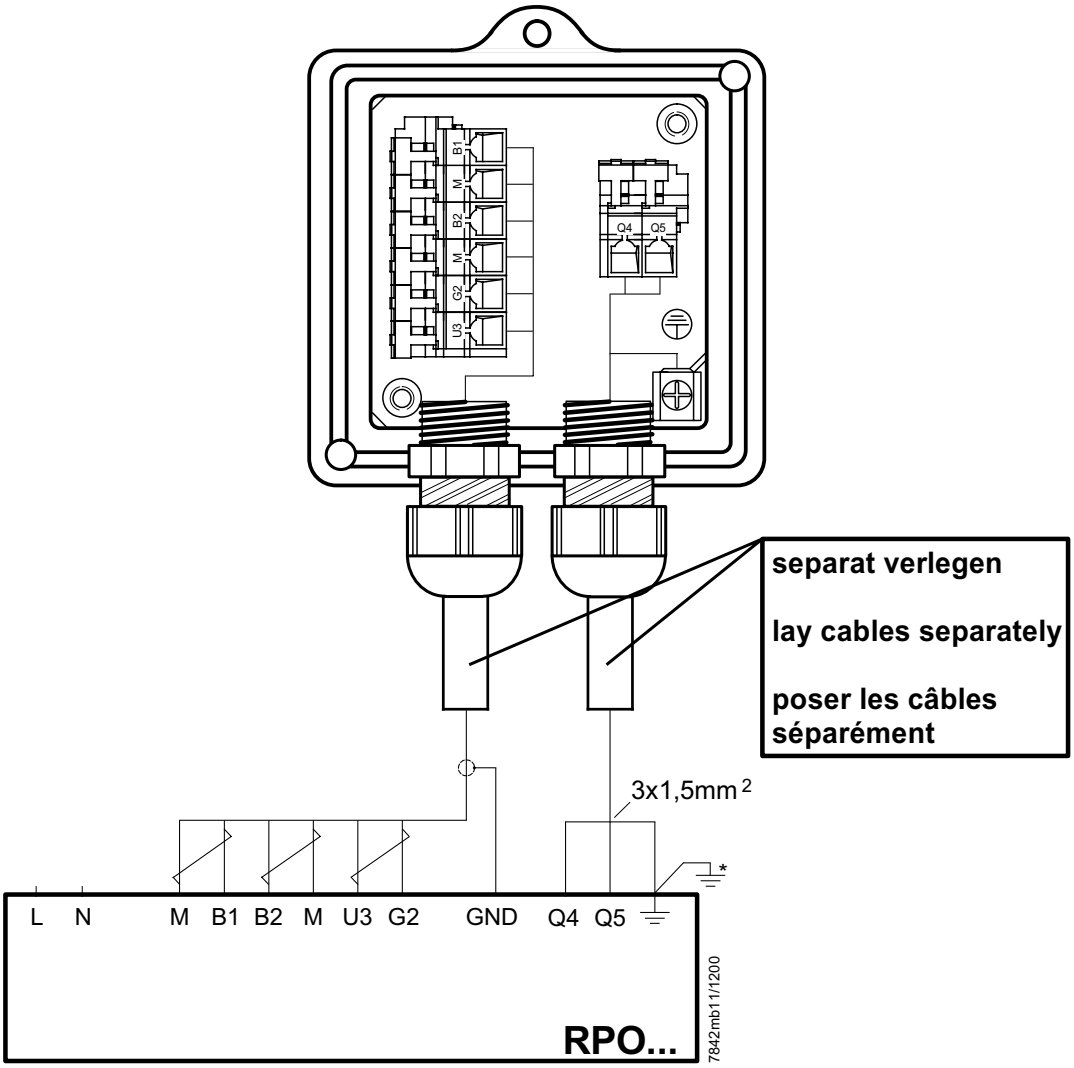

Hinweise für Installation und Inbetriebnahme

- Distanz zwischen Wand des Rauchgaskanals und Rauchgasaustritt (B) des AGO20... min. 10 mm

- Die Kaminisolierung darf nicht über den Anschlussflansch hinausragen und dadurch den Fühlerkopf isolieren (therm. Überlastung).
  Der Fühlerkopf muss frei bleiben!
  Strahlungswärme vermeiden; z.B. durch Wärmeleitbleche

- Bei der ersten Inbetriebnahme ist das Mess-Sytem ca. 2 Stunden vor Gebrauch einzuschalten.
  Bei kurzen Abschaltungen der Anlage (1-2 Wochen) ist es empfehlenswert, das Mess-System (QGO... und RPO) nicht auszuschalten.

- Während des Aufheizvorganges kann der Fühler falsch messen.

- QGO20... nie im kalten Zustand bei laufendem Brenner im Kamin einsetzen.

- Nach Fühlertausch, Ansteuerung der Fühlerheizung überprüfen.

- Spannung an Q4 - Q5 muss im 2 s Takt pulsieren.

- Sofort auschalten falls Spannung nicht pulsiert
➠ RPO austauschen

Commissioning and Installation Guide

- The distance between the wall of the flue gas duct and the flue gas outlet (B) of the AGO20... must be a minimum of 10 mm

- The insulation of the chimney must not project beyond the connecting flange, thus insulating the head of the sensor (thermal overload).
  The head of the sensor must remain uncovered!
  Avoid heat due to radiation, e.g. through thermal conductive plates

- When starting up the plant for the first time, the measuring system should be switched on approx. 2 hours prior to usage.
  If the plant is switched off for short periods of the time (1 to 2 weeks), it is recommended to leave the measuring system (QGO... and RPO) switched on.

- During the heating up phase, the detector could deliver an incorrect signal.

- Never use a cold QGO20... in the flueway while burner is operating.

- After changing the sensor, check the proper functioning of the sensor´s heating element

- Voltage at Q4 - Q5 must pulsate at 2-s intervals

- If voltage does not pulsate, switch equipment off immediately
➠ replace RPO

Instructions de mise en service et installation

- La distance entre la paroi de la conduite de gaz et la sortie des gaz de fumée (B) du AGO20... doit être d´au moins 10 mm.

- L´isolation de la cheminée ne doit pas dépasser la bride de raccordement, c´est-à-dire couvrir la tête de la sonde (surcharge thermique). La tête de la sonde ne doit pas être couverte! Eviter la chaleur de rayonnement, p.ex. par tôles thermo-conductrices

- Lors de la première mise en service, le dispositif de mesure doit être raccordé environ 2 heures avant l´utilisation. En case de courtes interruptions de l´installation (1-2 semaines), il est recommandé de ne pas déclencher le dispositif de mesure (QGO... et RPO).

- Pendant l´operation d´échauffement, il est possible que la sonde ne mesure pas correctement.

- Ne jamais introduire le QGO20... à l´état froid ou le laisser introduit dans la cheminée quand le brûleur est en marche.

- Lors d´un changement de sonde, verifier le signal de chauffage de celle-ci.

- Les tensions aux bornes Q4 - Q5 doivent commuter toutes les 2 s.

- Déconnecter immédiatement en cas de non-commutation des tensions
➠ Echanger le RPO

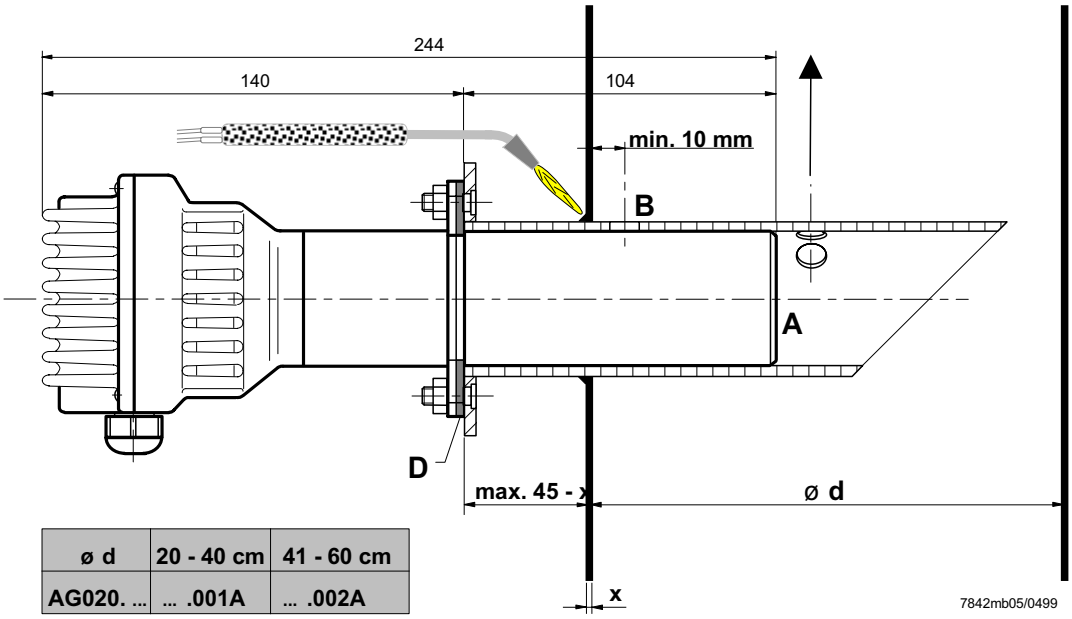

ø d	20 - 40 cm	41 - 60 cm
AG020. ...	... .001A	... .002A

Kerben beachten!
Observe notches!
Attention aux entailles!

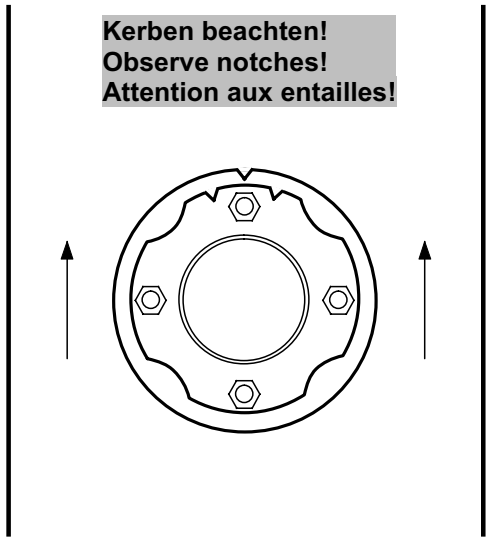

Legende:

Strömungsrichtung

Direction of flow of flue gases

Direction du courant des gaz de fumée

Maßbilder / Dimensions / Encombrements

QGO20...

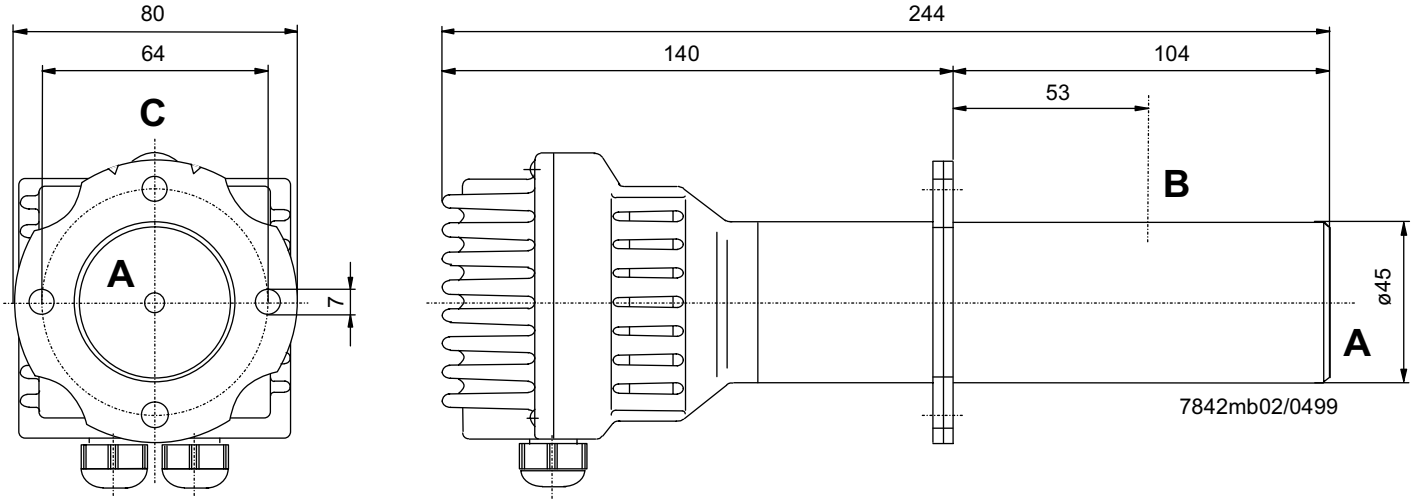

AGO20...

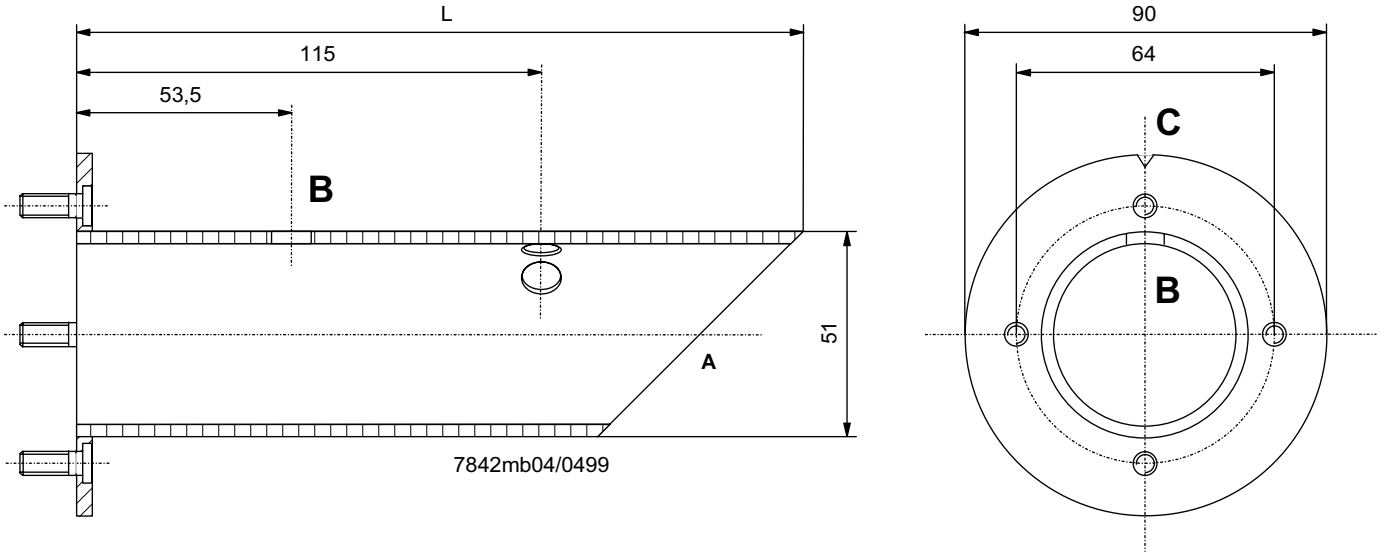

L = 180 mm für AGO20.001A
L = 260 mm für AGO20.002A

A = Rauchgaseintritt
B = Rauchgasaustritt
C = Kerbe
D = Flachdichtung (beiliegend)

L = 180 mm for AGO20.001A
L = 260 mm for AGO20.002A

A = Flue gas inlet
B = Flue gas outlet
C = Notch
D = Flat seal (enclosed)

L = 180 mm pour AGO20.001A
L = 260 mm pour AGO20.002A

A = Entrée du gaz de fumée
B = Sortie de gaz de fumée
C = Entaille
D = Joint d´étanchéité plat (inclus)

© Landis & Staefa Produktion GmbH

Technical Data PLL52...

LMV52... basic unit *Refer to chapter Technical Data!*

PLL52...

Mains voltage «X89-01»	AC 120 V –15 % / +10 %	AC 230 V -15 % / +10 %
Safety class	I with parts according to II as per DIN EN 60730-1	
Mains frequency	50 / 60 Hz ±6 %	
Power consumption	Ca. 4 VA	Ca. 4 VA
Degree of protection	IP54, housing closed	
Transformer AGG5.210		
- Primary side	AC 120 V	
- Secondary side	AC 12 V (3x)	
Transformer AGG5.220		
- Primary side	AC 230 V	
- Secondary side	AC 12 V (3x)	

Environmental conditions

Storage	DIN EN 60 721-3-1
Climatic conditions	class 1K3
Mechanical conditions	class 1M2
Temperature range	-20...+60 °C
Humidity	< 95 % r.h.
Transport	DIN EN 60 721-3-2
Climatic conditions	class 2K2
Mechanical conditions	class 2M2
Temperature range	-30...+70 °C
Humidity	< 95 % r.h.
Operation	DIN EN 60 721-3-3
Climatic conditions	class 3K5
Mechanical conditions	class 3M2
Temperature range	-20...+60 °C
Humidity	< 95 % r.h.

Condensation, formation of ice or ingress of water are not permitted!

Terminal ratings, cable lengths and cross-sectional areas

LMV52... basic unit Refer to chapter «Technical Data / LMV5... and AZL5...!»

PLL52...

Cable lengths / cross-sectional areas	
Electrical connection «X89»	Screw terminals up to max. 2.5 mm²
Cable lengths	≤10 m to QGO20...
Cross-sectional areas	Refer to description of QGO20... Twisted pairs

Analog inputs:	
Fresh air temperature detector	Pt1000 / LG-Ni1000
Flue gas temperature detector	Pt1000 / LG-Ni1000
QGO20...	Refer to Data Sheet N7842
Interface	Communication bus for LMV52...

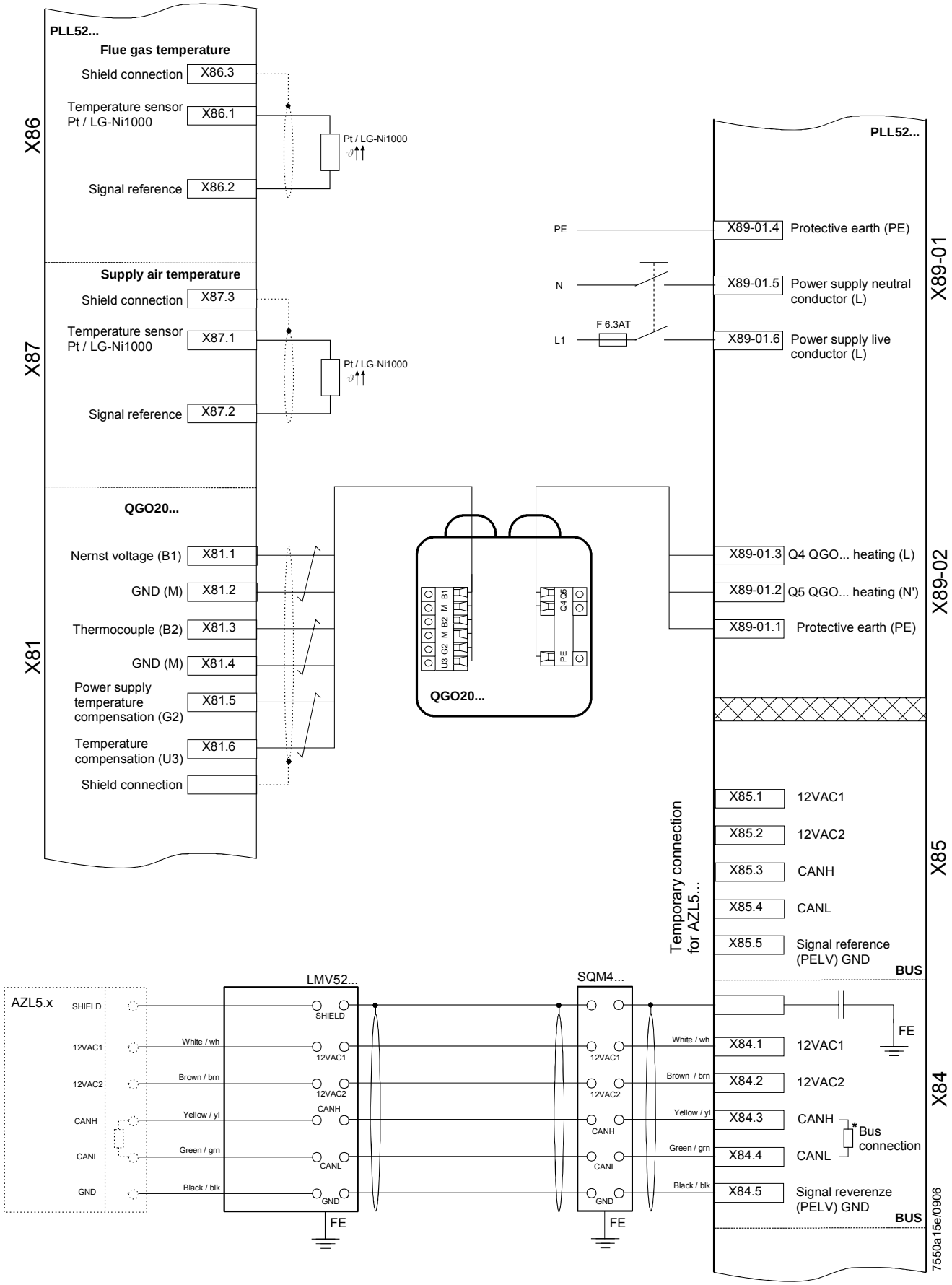
PLL52...
Flue gas temperature
Shield connection
X86.3
Temperature sensor Pt / LG-Ni1000
X86.1
Signal reference
X86.2
X86
Pt / LG-Ni1000
Supply air temperature
Shield connection
X87.3
Temperature sensor Pt / LG-Ni1000
X87.1
Signal reference
X87.2
X87
QGO20...
Nernst voltage (B1)
X81.1
GND (M)
X81.2
Thermocouple (B2)
X81.3
GND (M)
X81.4
Power supply temperature compensation (G2)
X81.5
Temperature compensation (U3)
X81.6
Shield connection
X81
B1
M
B2
M
G2
U3
Q4
Q5
PE
QGO20...
PLL52...
PE
X89-01.4
Protective earth (PE)
N
X89-01.5
Power supply neutral conductor (L)
L1
F 6.3AT
X89-01.6
Power supply live conductor (L)
X89-01
X89-01.3
Q4 QGO... heating (L)
X89-01.2
Q5 QGO... heating (N')
X89-01.1
Protective earth (PE)
X89-02
X85.1
12VAC1
X85.2
12VAC2
X85.3
CANH
X85.4
CANL
X85.5
Signal reference (PELV) GND
BUS
X85
Temporary connection for AZL5...
AZL5.x
SHIELD
12VAC1
12VAC2
CANH
CANL
GND
LMV52...
White / wh
Brown / brn
Yellow / yl
Green / grn
Black / blk
FE
SQM4...
X84.1
12VAC1
X84.2
12VAC2
X84.3
CANH
X84.4
CANL
Bus connection
X84.5
Signal reverenze (PELV) GND
BUS
X84
7550a15e/0906

KOSTAL INVERTER

Connection and programming
for electronically controlled burners with

LMV2x/3x, LMV5x, ETAMATIC
and INVERTER regulation

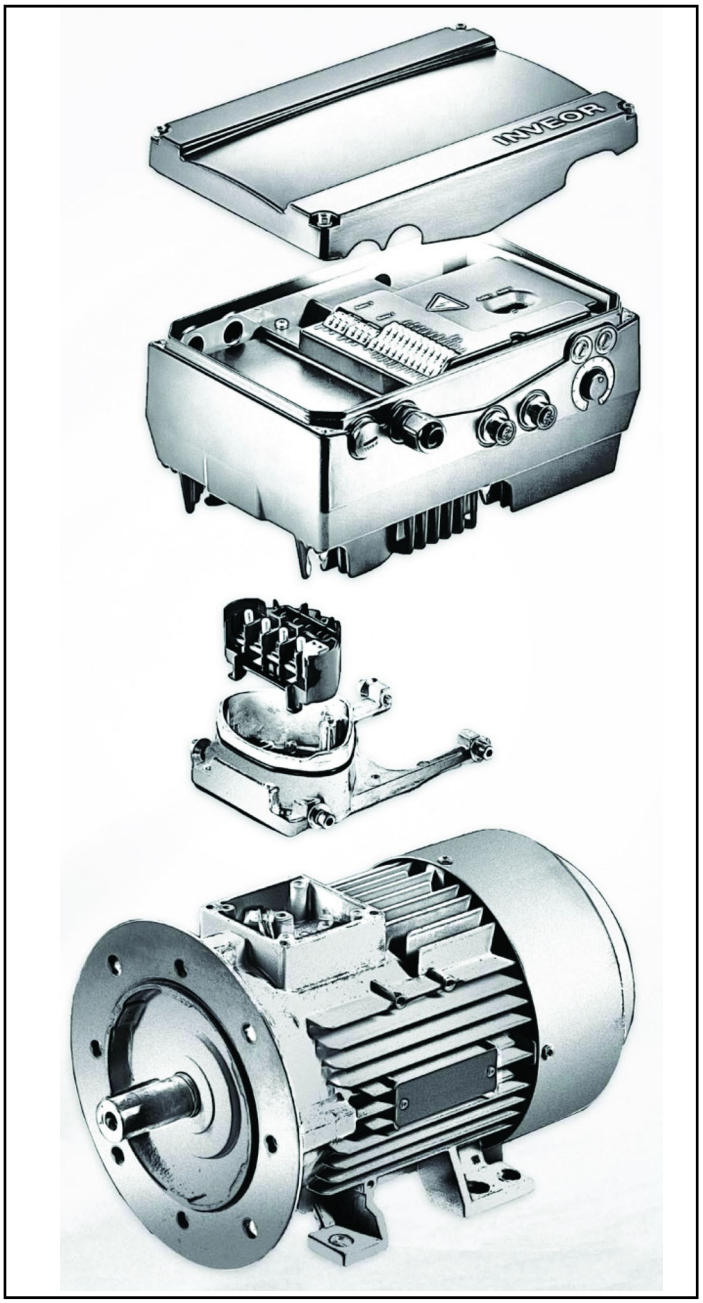

Service Manual
TECHNICAL
INSTRUCTIONS

M12938CA - Rel. 0 - 10/2021

Table of contents:

INVERTER identification, 3

User interface communication (on request), 4

Electrical connections, 5

Motor connection variants for INVERTERS sizes A, B and C, 5

Motor connection variants for INVERTER size D, 6

Connection of INVERTER signals and commands, 7

Electrical connections and parameter configuration, 7

0-10V / 4-20mA analogue input configuration, 8

Configuration of control contact / INVERTER starting and stopping, 9

Configuration of INVERTER start / stop parameters and operating mode, 10

Motor data, 11

Output signal variant for reading motor rpm (optional), 12

Brake chopper connections, 14

Burner terminal with INVERTER interface, 16

IDENTIFICAZIONE INVERTER

INVEOR Mx IVxx PWxx LPxx APxx GHxx DKxx COxx 1

1 2 3 4 5 6 7 8 9 10

	Key		Key
1	Drive controller series: INVEOR	**6**	Application circuit board: AP12 - Standard AP13 - CANopen
2	Installation location/size: motor-integrated - M,size: α, A, B, C, D	**7**	Control: DK01 - Standard (without membrane keypad) DK04 – With membrane keypad
3	Input voltage : IV02 - 230 V	**8**	Housing : GH10 – standard heat sink (black painted)
4	Recommended motor rating : kW: 0.55; 0.75; 1.1; 1.5; 2.2; 3.0; 4.0; 5.5; 7.5; 11.0; 15.0; 18.5; 22.0	**9**	Firmware version : CO00 - Standard CO01 - Specific
5	Printed circuit boards : LP01 / LP03 – Standard (without brake chopper); LP02 / LP04 – Standard (with brake chopper);	**10**	Equipment generation: 1 – current version

The **LMV5x** device controls fan motor rpm via a sensor and commands it via the inverter with a **4÷20mA** signal.
The **LMV3x/LMV2x** device controls fan motor rpm via a sensor and commands it via the inverter with a **0÷10V** signal.
Generally, the inverter curve goes from 50% to 100% of motor rpm. As well as improving burner regulation, this allows for a saving in terms of fan motor consumption.

INVEOR M INVERTER SIZES

TAGLIE
INVERTER INVEOR M...

α ***A*** ***B*** ***C*** ***D***

User interface
COMMUNICATION (on request)

The drive controller can be put in operation in the following ways:

Attention: Contact the manufacturer to order the most suitable device.

USB adaptor for PC	
Via the INVERTER PC software	
INVEOR MMI remote display:	
INVEOR MMI is a portable display on which all inverter parameters can be viewed and changed. Manual available on the KOSTAL website.	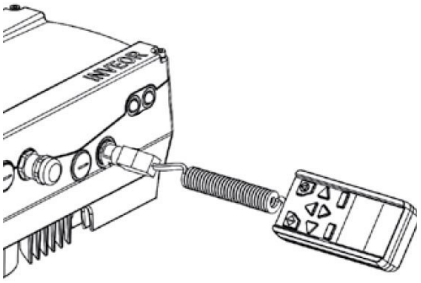
Bluetooth connection:	
Using the Bluetooth adaptor you can connect via app from any device. Download the app for Android / iOS from the Google Play Store / App Store.	
The Bluetooth adaptor is required to create a Bluetooth connection with the inverter. To view and change the inverter parameters, use an external interface device – tablet or mobile phone. Download the app for Android / iOS from the Google Play Store / App Store.	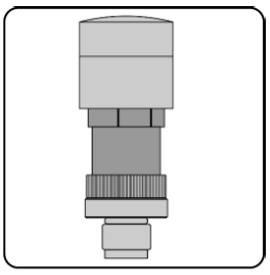

ELECTRICAL CONNECTIONS

Motor connection variants for INVERTERS sizes A, B and C

Star or delta connection for speed controller integrated on the motor

Delta connection variant ***Star connection variant***

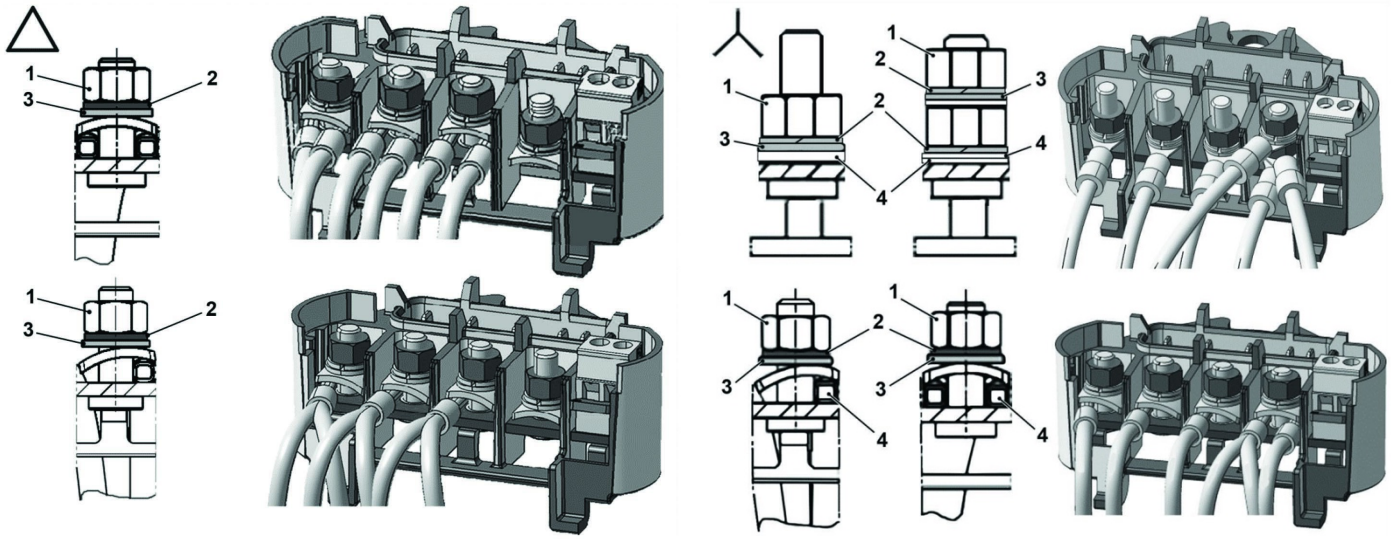

1 Nut MA = 5 Nm
2 Circlip
3 Plain washer
4 Cable shoe

Fig. 1

Motor connection variants for INVERTER size D

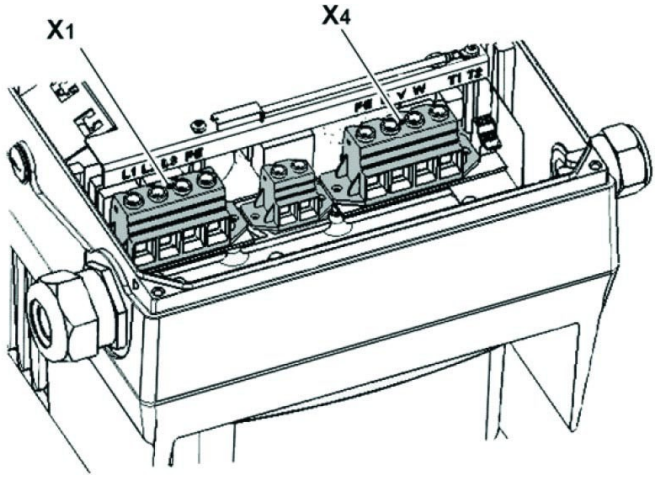

X1 terminal no.	Designation	Assignment
1	L1	Mains phase 1
2	L2	Mains phase 2
3	L3	Mains phase 3
4	PE	Protective conductor

Tab. 1 - X1 terminal assignment - 3 x 400 VAC

X4 terminal no.	Designation	Assignment
1	PE	Protective conductor
2	U	Mains phase 1
3	V	Mains phase 2
4	W	Mains phase 3

Tab. 2 - X1 terminal assignment - 3 x 400 VAC

Fig. 2 – Assembly sequence: Connection box – adapter plate size D

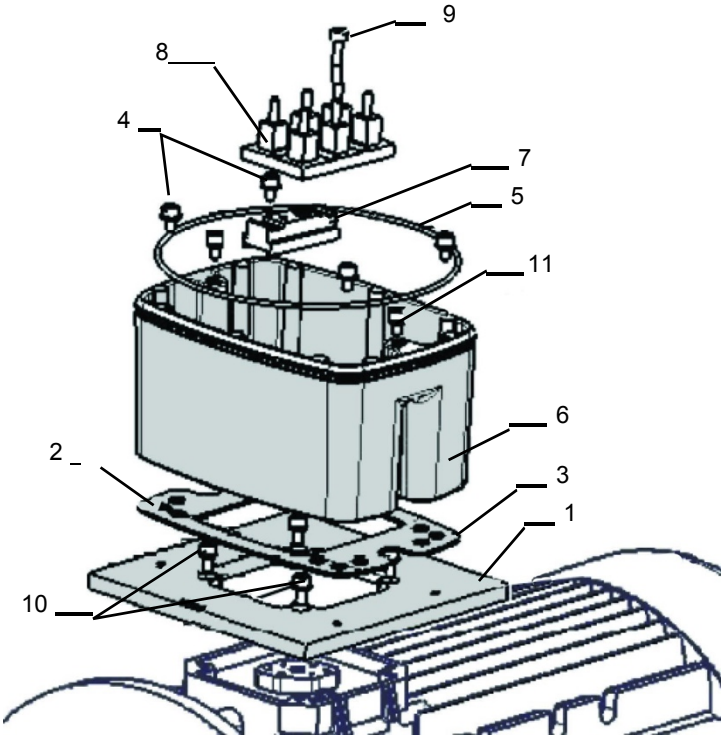

Key:

1 Adapter plate option (variant)
2 Holes depending on motor
3 Seal
4 Retaining bolts with spring elements
5 O-ring seal
6 INVEOR / adapter plate support
7 Terminal heightening option
8 Original terminal (not included)
9 Extended screw option (for pos.7)
10 Retaining bolts with spring elements option
11 INVEOR/support retaining bolts

Connection of INVERTER signals and commands

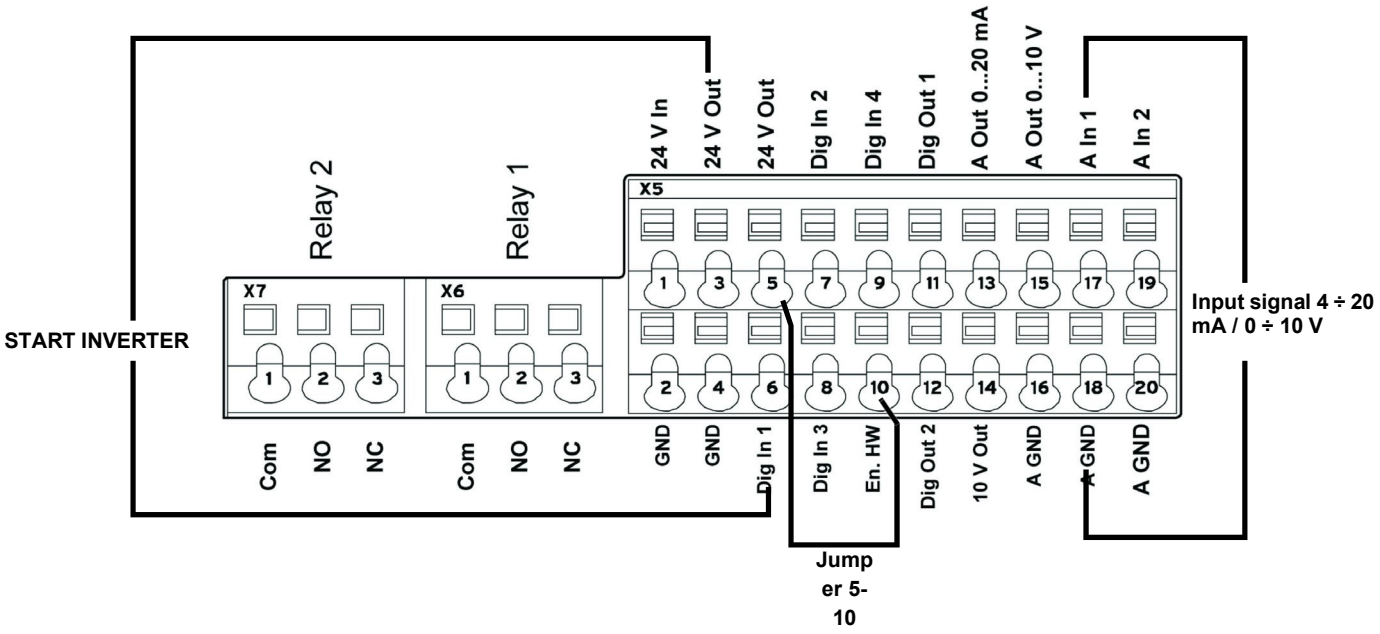

Electrical connections and parameter configuration

There are 2 relays on the INVERTER. Connecting terminals X7-1-2-3 and X6-1-2-3 are used for:

LMV2/3x: Relay 1 is used as a safety contact on the safety loop series of the equipment. Relay 2 is used as a fault indicator on the burner panel front.

LMV5x / ETAMATIC: Relay 1 is used as a contact for control of fan motor start. Relay 2 is used as a fault indicator of the INVERTER to the LMV5x / ETAMATIC equipment.

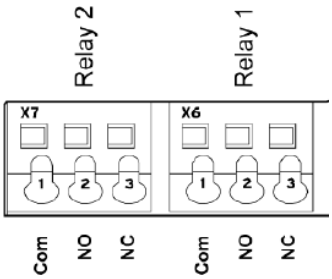

Parameter		
1.181	Automatic reset function	Automatic reset of faults. The INVERTER resets the fault after the set time. **Set value = 30 seconds**
1.182	Automatic reset numbers	With the reset function the maximum number of automatic resets can be limited. **Set value = 0 (maximum number of automatic resets)**
4.190	Relay 1 functions	Select the operating mode of relay 1. **Set value = LMV2x/3x..= 11 (NC inverted error)** **Set value = LMV5x / ETAMATIC = 19 (motor is in NO function)**
4.210	Relay 2 functions	Select the operating mode of relay 2. **Set value = LMV2x/3x..= 11 (NC inverted error)** **Set value = LMV5x / ETAMATIC = 11 (NC inverted error)**
4.210	V O operation	**Set value = 10 (NO error)**

0-10V / 4-20mA analogue input configuration

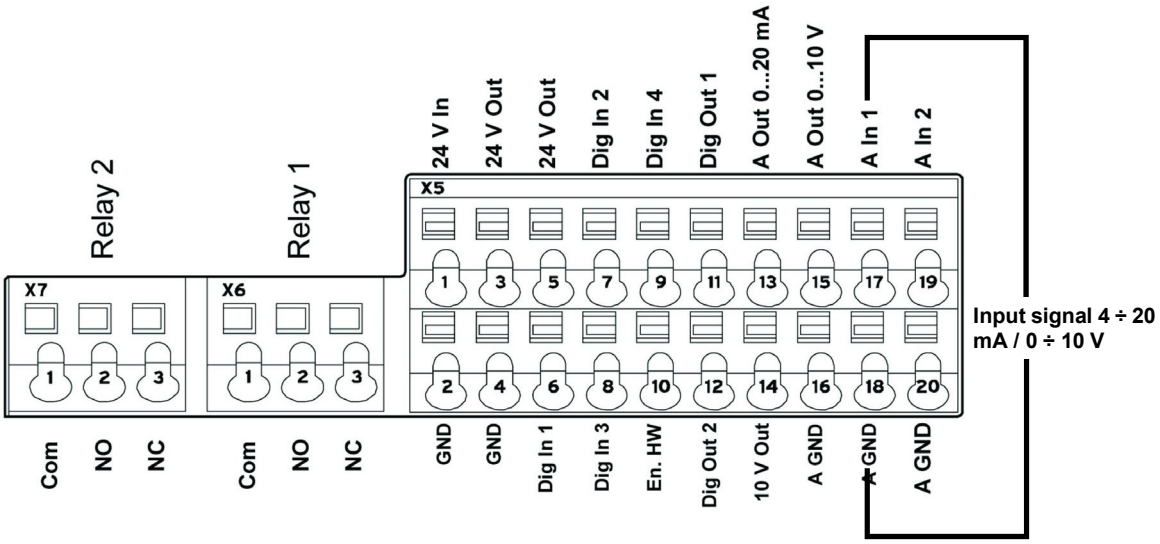

Input AIn1 can be configured as voltage or current input. It is configured as 4-20mA input current for LMV5-Etamatic, and 0-10V input voltage for LMV2x/3x.

4.020	Input type AI1	Specifies the input type, whether voltage or current. **1**= Voltage input 0-10V (LMV2x/3x) **2**= Current input 0/4-20mA (LMV5 ETAMATIC)
4.021	AI1 Standard low	Specifies the minimum value of the analogue input as a percentage of the range. E.g.: 0…10 V or 0…20 mA = 0 %...100 % 2…10 V or 4…20 mA = 20 %...100 % **Set value = 20% for LMV2x/3x, LMV5x, ETAMATIC**
4.022	AI1 Standard high	Specifies the maximum value of the analogue input as a percentage of the range at 10V or 20mA. **Set value = 100%**
4.023	AI1 Response time	Specifies the deadband on the input signal. **Set value = 1%**
4.024	AI1 Filter time	An input change is taken into consideration after this time. If it is too short, a wire break error may appear if the 4-20 mA signal goes to 0 for a short time. **Set value = 4 seconds**
4.030	AI1 Input function	Specifies whether the input is 0 = analogue / 1 = digital input. **Set value = 0 analogue**
4.033	AI1 Measure unit, input 1	Specifies the unit of measurement of input 1. **Set value = 0 (%)**
4.034	AI1 Lower limit	Specifies the lower limit of input 1. **Set value = 0 (%)**
4.035	AI1 Upper limit	Specifies the upper limit of input 1. **Set value = 100 (%)**
4.036	AI1 Wire break time, 5s	Specifies the time after which the fault appears if input AI1 is interrupted (wire break). **Set value = 5 seconds**
4.037	AI1 Inversion	Inverts the signal of input 1. **Set value = 0 (disabled)**

Configuration of control contact / INVERTER starting and stopping

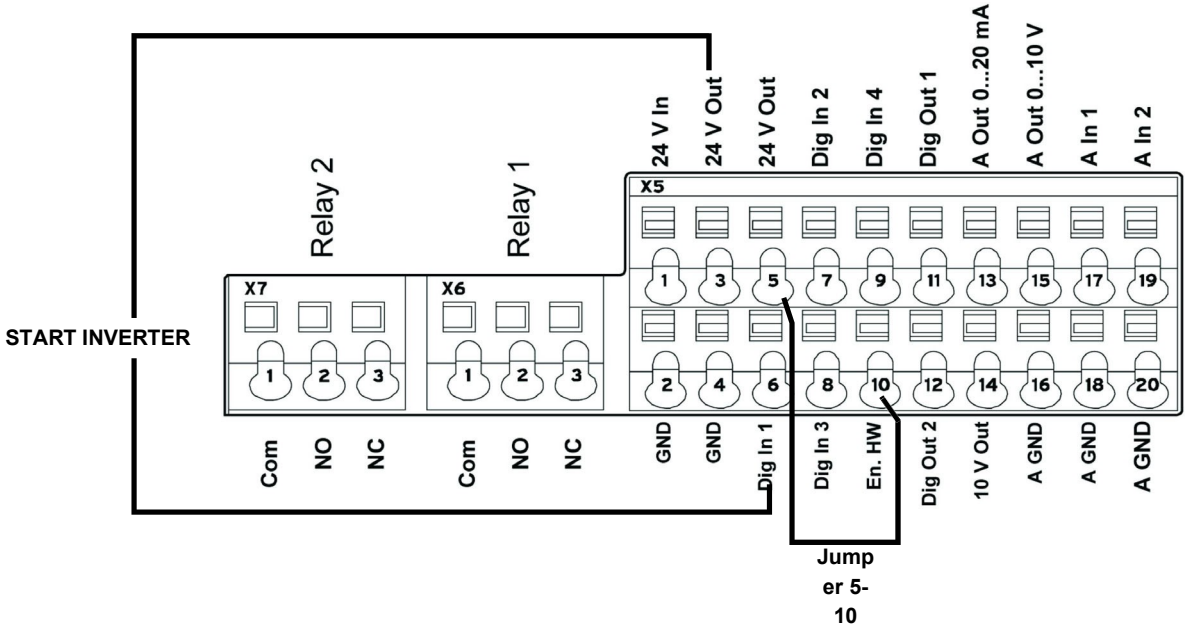

Terminal	
X5-3 (24V Out)… X5-6 (Digit In1)..	Bringing 24V to terminal **X5-6** enables INVERTER operation and the contact that switches it on/off. On LMV2/3x **X5-3** (24V Out) also powers the motor speed encoder.
X5-5 (24V Out) connected with X5-10 (En.HW)…	Required to enable braking ramp xxxx

Configuration of INVERTER start / stop parameters and operating mode

Parameter		
1.020	Min. frequency (Hz)	Minimum input frequency in Hz. **Set value = 0 Hz (LMV2x-3x / LMV5x)** **Set value = > 35 Hz (ETAMATIC)**
1.021	Max. frequency (Hz)	Maximum input frequency in Hz. **Set value = 51,5 Hz (LMV2x-3x / LMV5x)** **Set value = 50 Hz (ETAMATIC)**
1.050	Ramp 1 Braking time 1	Braking time at switch-off to reach the speed of 0 Hz after the start/stop contact has opened (not used). **Set value = 10 seconds**
1.051	Ramp 1 Acceleration time 1	Acceleration time 1 is the time necessary for the drive controller to accelerate from 0 Hz to maximum frequency (not used). **Set value = 10 seconds**
1.052	Ramp 2 Braking time 2	Braking time at switch-off to reach the speed of 0 Hz after the start/stop contact has opened. **Set value = 10 seconds**
1.053	Ramp 2 Acceleration time 2	Acceleration time 2 is the time necessary for the drive controller to accelerate from 0 Hz to maximum frequency. **Set value = 10 seconds**
1.054	Selects ramp used	Digital input 1 (**dig In1 / X5-6**) selects the ramp used. **Set value = 1 (parameters 1.052 and 1.053)**
1.088	Quick stop	Not used but set. **Set value = 10 seconds**
1.100	Operating mode	Frequency control mode: specifies the operating mode of the INVERTER. In our case it is always frequency control (0). **Set value = 0**
1.130	Reference set point	Determines the source from which the reference value is read. In our case it is always analogue input AI1. **Set value = 1 (analogue input 1)**
1.131	Enabling software	Depending on the change made, the motor may start immediately. Selection of the source for enabling control. **Set value = 0**
1.132	Start-up protection	Selection of behaviour in response to enabling software. **Set value = 1** **(Start only with rising edge at input of control enable)**
1.150	Motor rotation direction	Do not change this parameter. To invert the direction of rotation, invert 2 of the 3 INVERTER / MOTOR cabling wires, so that the INVERTERS always have the same setting. **Set value = 1 forwards only / clockwise rotation** **(no changes to direction of rotation are possible)**

Motor data

The motor data depend on the type of motor used. Refer to the data shown on the motor nameplate. Follow the steps below:
- Enter the motor data;
- Activate the motor recognition function;
- If the operation ends successfully, enter the remaining parameters.

During the recognition phase, the INVERTER measures some parameters and changes some settings.
N.B.: At each start-up of the recognition programme, recheck all the parameters in this manual.

Parameter		
33.001	Motor type	Selection of motor type. **Set value = 1 (asynchronous motor)**
33.010	Motor I^2t factor	Not used. Only for encoders. **Set value = 100%**
33.011	I^2t time	Not used. Only for encoders **Set value = 30 seconds**
33.015	R optimisation	If necessary, this parameter can be used to optimise the start-up behaviour. Not used **Set value = 100%**
33.016	Motor phase control	The "Motor connection interrupted" error monitoring (error 45) can be enabled/disabled with this parameter. **Set value = 1 (enabled control)**
33.031	Motor current	Maximum motor current. **Set value = motor nameplate current value in amps**
33.032	Motor rating	Motor shaft rating. **Set value = motor nameplate rating value in watts**
33.034	Motor rpm	Motor rpm. **Set value = motor nameplate speed in rpm**
33.035	Motor frequency	Nominal motor frequency. **Set value = motor nameplate frequency in Hz**
33.050	Stator resistance	Recognised by INVERTER. **Set value = automatically detected, value in Ohm**
33.105	Leakage inductance	Recognised by INVERTER. **Set value = automatically detected, value in henry**
33.110	Motor voltage	Nominal motor voltage. **Set value = 400V**
33.111	Motor cos phi	Data on motor nameplate. **Set value = 0,xx**
33.138	Holding current time	Needed to stop the motor!! After braking it is held at continuous current for a specified time interval. Ensure that there is no overheating in this phase. Recommended time: max 5 s. **Set value = 0 seconds**

Activate the “Motor identification” function and follow the instructions proposed by the INVERTER, then change the parameters described below. The image shows the software screen on the PC.

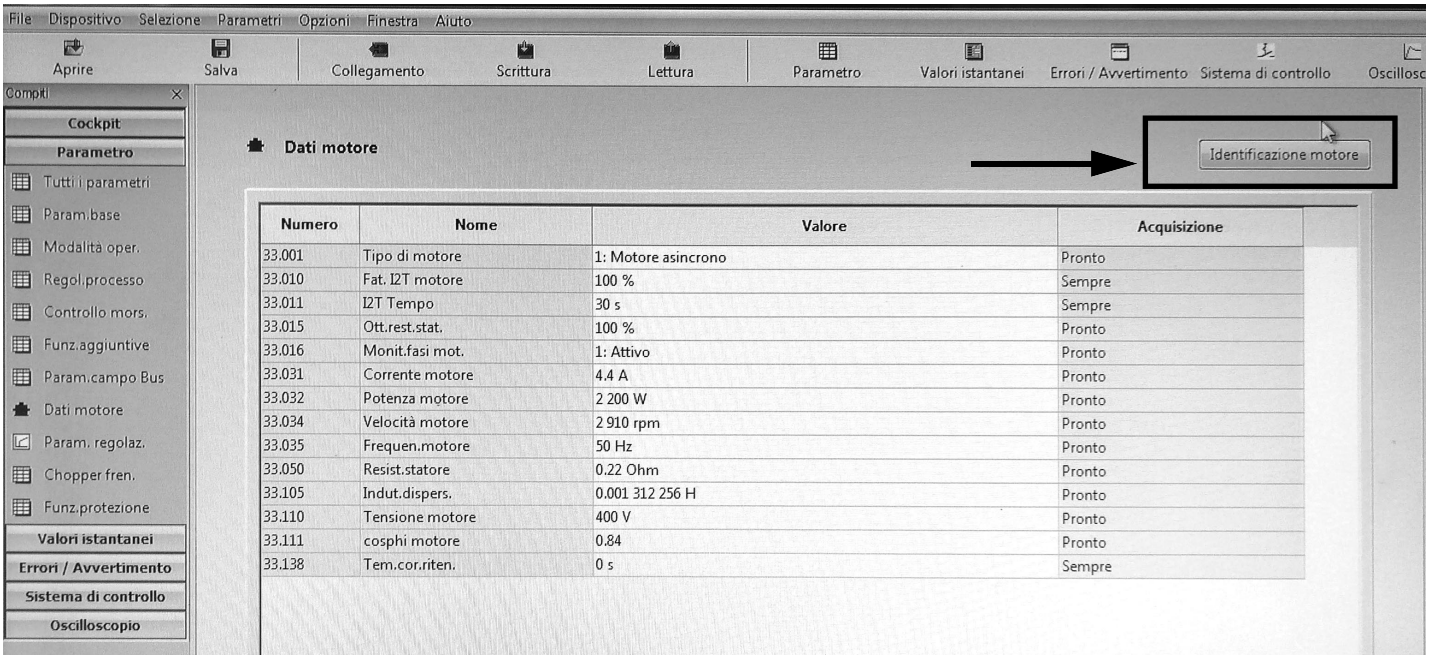

Parameter		
34.010	**Control type**	Open-loop asynchronous motor. **Set value = 100 (open-loop asynchronous motor)**
34.020	**Flying restart**	**Set value = 1 (enabled)**
34.021	**Flying restart time**	Calculated by Inverter. **Set value = value calculated by INVERTER in ms**
34.090	**Speed controller K_P**	Calculated by the inverter during the motor recognition phase. Reset it to 2000 after motor recognition. **Set value = 2000 mA/rad/sec**
34.091	**Speed controller T_N**	Calculated by the inverter during the motor recognition phase. Reset it to 7.5 seconds after motor recognition. **Set value = 7.5 seconds**
34.110	**Slip trimmer**	If set to **1** the function is enabled. If set to **0** the motor performs as if connected to the mains. If compensation is enabled, the system aligns the stator frequency with the rotor. As a result, the actual motor rpm increase and are brought in line with the theoretical motor nameplate rpm. The motor is supplied with the same voltage and frequency, but the current increases and the rpm are brought to the nameplate data. **Set value = 1 (compensation for slippage)**

Output signal variant for reading motor rpm (optional)

To have a 4-20 mA analogue output that indicates the motor rpm to the terminals X5-13 (Aout 0-20 mA) and X5-16 (A GND), set the parameters below:

Parameter		
4.100	Analogue output AO1	Selection of analogue output options. In our case, to have an output proportional to the rpm, set 19. **Set value = 19 (actual rpm)**
4.101	Minimum value of analogue output AO1	Output signal at 0-20 mA. To obtain a 4-20 mA signal with (4 mA = 0 motor rpm), follow the example: if motor rpm are a maximum 2900, calculate: 2900 / 20 x 4 = **580**, which is the negative value corresponding to 0 mA from which to start. Therefore: 0 mA = - 580, 20 mA = 2900 **Set value = - xxx (-580 in the example)**
4.102	Maximum value of analogue output AO1	Maximum rpm value for 20 mA. **Set value = xxxx (2900 in the above example)**

NOTE 1	If the system enters pendulum mode with LMV.. / ETAMATIC, adjust parameters **34.090** and **34.091** by increasing them, in particular parameter **34.090**, in steps of 100mA/rad/sec.
NOTE 2	With LMV 2x/3x with INVERTER control, the device controls the standby rpm with **param. 653**. If, after the fan is switched off, the device LMV 2x/3x sees that the motor continues to run, error **83** diagnostic **32** appears. This occurs if there is significant fan inertia (e.g. on burners with very heavy forward curved blades), then always disable parameter 653, setting it to **0**.
NOTE 3	With LMV 2x/3x the signal 0-10V for motor rpm control during standardisation is brought to approximately 9.7 V and the fan motor rpm is saved. According to the LMV manual, the INVERTER should be set to max 52.5 Hz During standardisation, the INVERTER is driven at approximately 51 ÷ 51.5 Hz and may go out of absorption range with the motor. For this reason, set the INVERTER to max 51.5 Hz. During standardisation, the INVERTER will reach 50Hz and the over-absorption problem will be reduced.
NOTE 4	**If the <u>analogue wire break fault</u> is displayed on the INVERTER and the 4-20 mA inverter signal continues to oscillate between 1 ÷ 6 mA, it does not always mean that the LMV 2x/3x or ETAMATIC equipment is faulty. It could be due to the old firmware of the INVERTER and should therefore be updated. If this is the case, contact the Service Centre.**

FAULTS / PROBLEMS.. SOLUTIONS		
Parameter 36.020	If error 36 appears	Problems detected in the mains supply. By setting this parameter to 0, the INVERTER no longer checks the mains and the error message disappears. It is recommended to leave the parameter set to 1.
Parameter 33.105	If mains voltage drops during operation	When the mains voltage drops, the INVERTER decreases the motor rpm. To reduce this change, set the parameter to 0, which should solve the problem.

Brake chopper connections

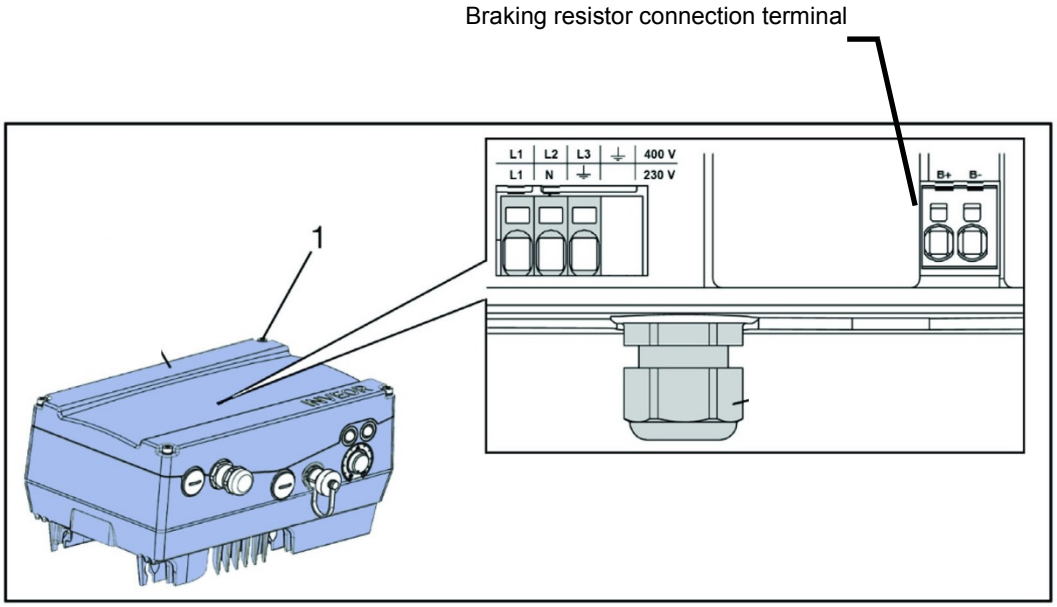

Brake chopper connections

Terminal no.	Designation	Assignment
1	B+	Braking resistor connection (+)
2	B-	Braking resistor connection (-)

Optional assignment of brake chopper

Parameter	
Braking resistor	Enabled or disabled

Braking resistors

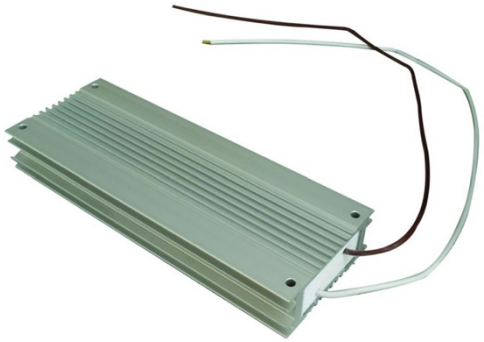

Burner terminal block with interface INVERTER

Versioni bruciatore con LMV2x/3x

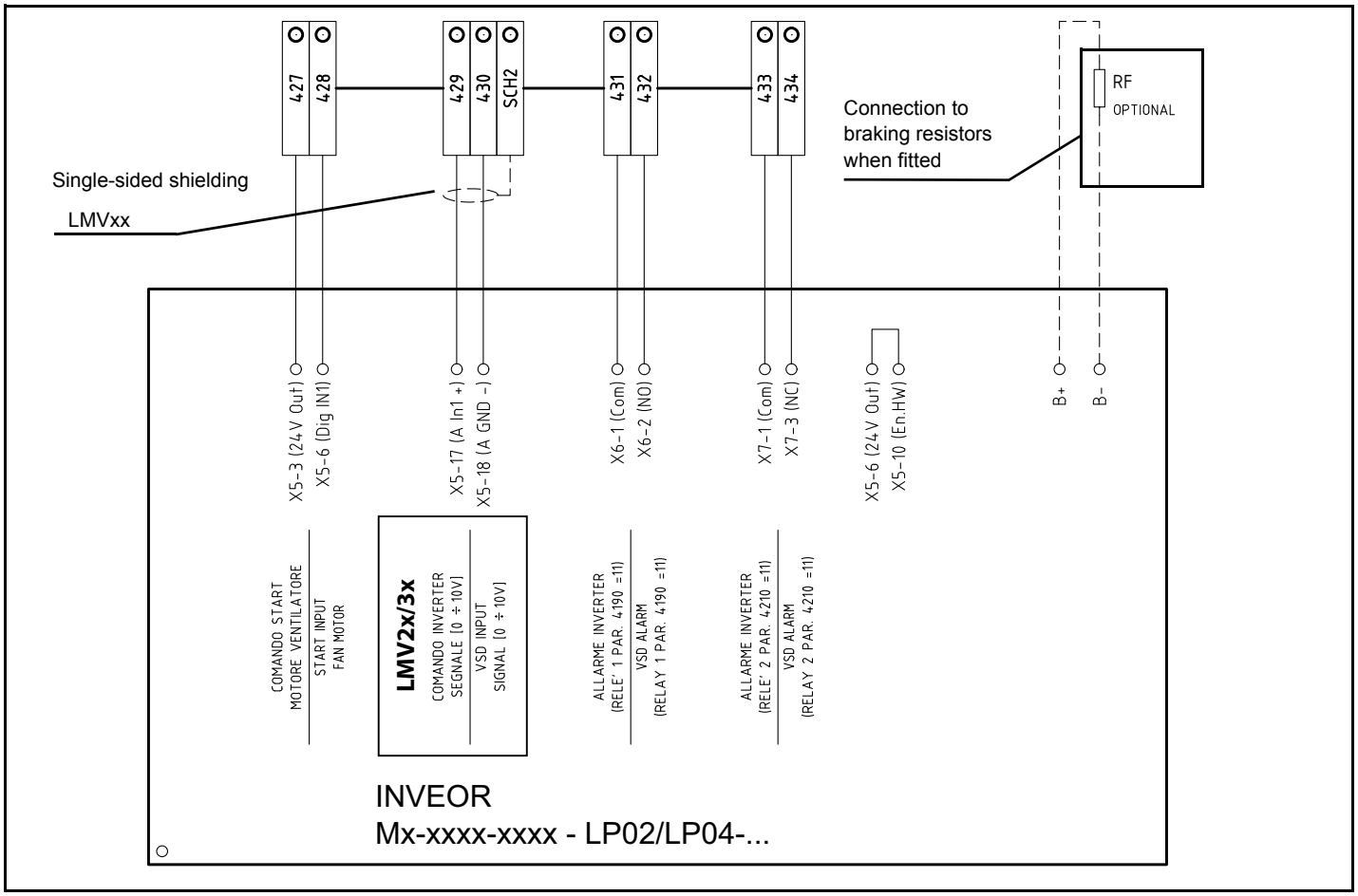

Versioni bruciatore con LMV5x o ETAMATIC

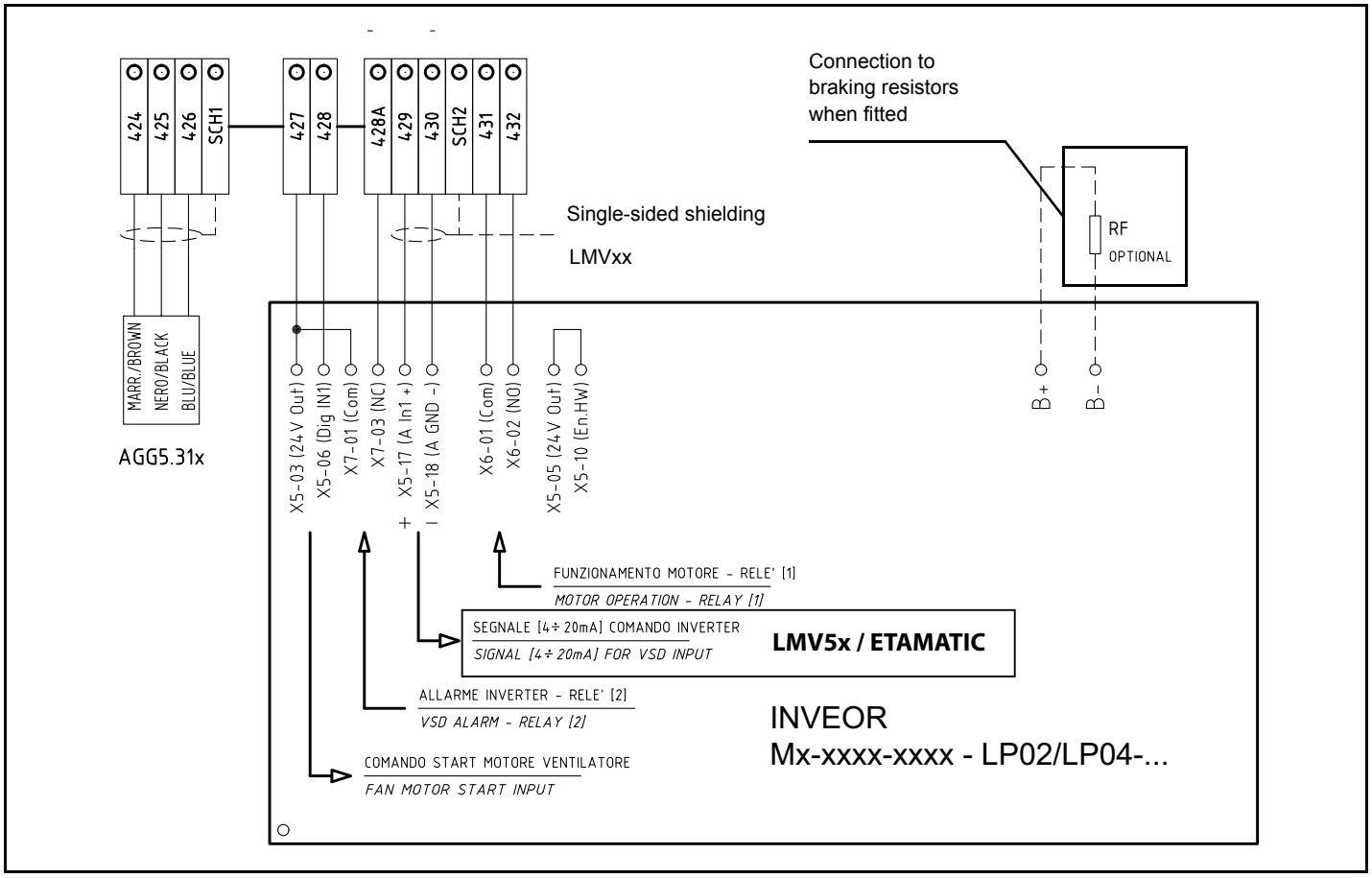

C.I.B. UNIGAS S.p.A.
Via L.Galvani, 9 - 35011 Campodarsego (PD) - ITALY
Tel. +39 049 9200944 - Fax +39 049 9200945/9201269
web site: www.cibunigas.it - e-mail: cibunigas@cibunigas.it

Note: specifications and data subject to change. Errors and omissions excepted.