PN60
PN70
PN81

Heavy oil bruners
Progressive/Fully-modulating

MANUAL OF INSTALLATION – USE – MAINTENANCE

CIB UNIGAS

BURNERS - BRUCIATORI - BRULERS - BRENNER - QUEMADORES - ГОРЕЛКИ

M039190CE Rel.4.4 10/20156

WARNINGS

THIS MANUAL IS SUPPLIED AS AN INTEGRAL AND ESSENTIAL PART OF THE PRODUCT AND MUST BE DELIVERED TO THE USER.

INFORMATION INCLUDED IN THIS SECTION ARE DEDICATED BOTH TO THE USER AND TO PERSONNEL FOLLOWING PRODUCT INSTALLATION AND MAINTENANCE.

THE USER WILL FIND FURTHER INFORMATION ABOUT OPERATING AND USE RESTRICTIONS, IN THE SECOND SECTION OF THIS MANUAL. WE HIGHLY RECOMMEND TO READ IT.

CAREFULLY KEEP THIS MANUAL FOR FUTURE REFERENCE.

1) GENERAL INTRODUCTION

- The equipment must be installed in compliance with the regulations in force, following the manufacturer's instructions, by qualified personnel.
- Qualified personnel means those having technical knowledge in the field of components for civil or industrial heating systems, sanitary hot water generation and particularly service centres authorised by the manufacturer.
- Improper installation may cause injury to people and animals, or damage to property, for which the manufacturer cannot be held liable.
- Remove all packaging material and inspect the equipment for integrity.
- In case of any doubt, do not use the unit - contact the supplier.
- The packaging materials (wooden crate, nails, fastening devices, plastic bags, foamed polystyrene, etc), should not be left within the reach of children, as they may prove harmful.
- Before any cleaning or servicing operation, disconnect the unit from the mains by turning the master switch OFF, and/or through the cut-out devices that are provided.
- Make sure that inlet or exhaust grilles are unobstructed.
- In case of breakdown and/or defective unit operation, disconnect the unit. Make no attempt to repair the unit or take any direct action.
- Contact qualified personnel only.
- Units shall be repaired exclusively by a servicing centre, duly authorised by the manufacturer, with original spare parts.
- Failure to comply with the above instructions is likely to impair the unit's safety.
- To ensure equipment efficiency and proper operation, it is essential that maintenance operations are performed by qualified personnel at regular intervals, following the manufacturer's instructions.
- When a decision is made to discontinue the use of the equipment, those parts likely to constitute sources of danger shall be made harmless.
- In case the equipment is to be sold or transferred to another user, or in case the original user should move and leave the unit behind, make sure that these instructions accompany the equipment at all times so that they can be consulted by the new owner and/or the installer.
- For all the units that have been modified or have options fitted then original accessory equipment only shall be used.
- This unit shall be employed exclusively for the use for which it is meant. Any other use shall be considered as improper and, therefore, dangerous.
- The manufacturer shall not be held liable, by agreement or otherwise, for damages resulting from improper installation, use and failure to comply with the instructions supplied by the manufacturer.

2) SPECIAL INSTRUCTIONS FOR BURNERS

- The burner should be installed in a suitable room, with ventilation openings complying with the requirements of the regulations in force, and sufficient for good combustion.
- Only burners designed according to the regulations in force should be used.
- This burner should be employed exclusively for the use for which it was designed.
- Before connecting the burner, make sure that the unit rating is the same as delivery mains (electricity, gas oil, or other fuel).
- Observe caution with hot burner components. These are, usually, near to the flame and the fuel pre-heating system, they become hot during the unit operation and will remain hot for some time after the burner has stopped.

When the decision is made to discontinue the use of the burner, the user shall have qualified personnel carry out the following operations:

a) Remove the power supply by disconnecting the power cord from the mains.

b) Disconnect the fuel supply by means of the hand-operated shut-off valve and remove the control handwheels from their spindles.

SPECIAL WARNINGS

- Make sure that the burner has, on installation, been firmly secured to the appliance, so that the flame is generated inside the appliance firebox.
- Before the burner is started and, thereafter, at least once a year, have qualified personnel perform the following operations:

a) set the burner fuel flow rate depending on the heat input of the appliance;

b) set the flow rate of the combustion-supporting air to obtain a combustion efficiency level at least equal to the lower level required by the regulations in force;

c) check the unit operation for proper combustion, to avoid any harmful or polluting unburnt gases in excess of the limits permitted by the regulations in force;

d) make sure that control and safety devices are operating properly;

e) make sure that exhaust ducts intended to discharge the products of combustion are operating properly;

f) on completion of setting and adjustment operations, make sure that all mechanical locking devices of controls have been duly tightened;

g) make sure that a copy of the burner use and maintenance instructions is available in the boiler room.

- In case of a burner shut-down, reser the control box by means of the RESET pushbutton. If a second shut-down takes place, call the Technical Service, without trying to RESET further.
- The unit shall be operated and serviced by qualified personnel only, in compliance with the regulations in force.

3) GENERAL INSTRUCTIONS DEPENDING ON FUEL USED

3a) ELECTRICAL CONNECTION

- For safety reasons the unit must be efficiently earthed and installed as required by current safety regulations.
- It is vital that all saftey requirements are met. In case of any doubt, ask for an accurate inspection of electrics by qualified personnel, since the manufacturer cannot be held liable for damages that may be caused by failure to correctly earth the equipment.
- Qualified personnel must inspect the system to make sure that it is adequate to take the maximum power used by the equipment shown on the equipment rating plate. In particular, make sure that the system cable cross section is adequate for the power absorbed by the unit.
- No adaptors, multiple outlet sockets and/or extension cables are permitted to connect the unit to the electric mains.
- An omnipolar switch shall be provided for connection to mains, as required by the current safety regulations.
- The use of any power-operated component implies observance of a few basic rules, for example:

- do not touch the unit with wet or damp parts of the body and/or with bare feet;
- do not pull electric cables;
- do not leave the equipment exposed to weather (rain, sun, etc.) unless expressly required to do so;
- do not allow children or inexperienced persons to use equipment;

- The unit input cable shall not be replaced by the user.
  In case of damage to the cable, switch off the unit and contact qualified personnel to replace.

When the unit is out of use for some time the electric switch supplying all the power-driven components in the system (i.e. pumps, burner, etc.) should be switched off.

3b) FIRING WITH GAS, LIGHT OIL OR OTHER FUELS
GENERAL

- The burner shall be installed by qualified personnel and in compliance with regulations and provisions in force; wrong installation can cause injuries to people and animals, or damage to property, for which the manufacturer cannot be held liable.
- Before installation, it is recommended that all the fuel supply system pipes be carefully cleaned inside, to remove foreign matter that might impair the burner operation.
- Before the burner is commissioned, qualified personnel should inspect the following:

a) the fuel supply system, for proper sealing;
b) the fuel flow rate, to make sure that it has been set based on the firing rate required of the burner;
c) the burner firing system, to make sure that it is supplied for the designed fuel type;
d) the fuel supply pressure, to make sure that it is included in the range shown on the rating plate;
e) the fuel supply system, to make sure that the system dimensions are adequate to the burner firing rate, and that the system is equipped with all the safety and control devices required by the regulations in force.

- When the burner is to remain idle for some time, the fuel supply tap or taps should be closed.

SPECIAL INSTRUCTIONS FOR USING GAS

Have qualified personnel inspect the installation to ensure that:
a) the gas delivery line and train are in compliance with the regulations and provisions in force;
b) all gas connections are tight;
c) the boiler room ventilation openings are such that they ensure the air supply flow required by the current regulations, and in any case are sufficient for proper combustion.

- Do not use gas pipes to earth electrical equipment.
- Never leave the burner connected when not in use. Always shut the gas valve off.
- In case of prolonged absence of the user, the main gas delivery valve to the burner should be shut off.

Precautions if you can smell gas

a) do not operate electric switches, the telephone, or any other item likely to generate sparks;
b) immediately open doors and windows to create an air flow to purge the room;
c) close the gas valves;
d) contact qualified personnel.

- Do not obstruct the ventilation openings of the room where gas appliances are installed, to avoid dangerous conditions such as the development of toxic or explosive mixtures.

DIRECTIVES AND STANDARDS

Gas burners

European directives:
- Directive 2009/142/EC - Gas Appliances;
- Directive 2006/95/EC on low voltage;
- Directive 2004/108/EC on electromagnetic compatibility

Harmonised standards :
-UNI EN 676 (Gas Burners;
-CEI EN 60335-1 (Household and similar electrical appliances - Safety. Part 1: General requirements;
- EN 50165 (Electrical equipment of non-electric appliances for household and similar purposes. Safety requirements.

Light oil burners

European directives:
- Directive 2006/95/EC on low voltage;
- Directive 2004/108/EC on electromagnetic compatibility

Harmonised standards :
-CEI EN 60335-1 (Household and similar electrical appliances - Safety. Part 1: General requirements;
- EN 50165 (Electrical equipment of non-electric appliances for household and similar purposes. Safety requirements.

National standards :
-UNI 7824: Monobloc nebulizer burners for liquid fuels. Characteristics and test methods

Heavy oil burners

European directives:
- Directive 2006/95/EC on low voltage;
- Directive 2004/108/EC on electromagnetic compatibility

Harmonised standards :
-CEI EN 60335-1 Household and similar electrical appliances - SafetyPart 1: General requirements;
- EN 50165 Electrical equipment of non-electric appliances for household and similar purposes. Safety requirements.

National standards :
-UNI 7824: Monobloc nebulizer burners for liquid fuels. Characteristics and test methods

Gas - Light oil burners

European directives:
- Directive 2009/142/EC - Gas Appliances;
- Directive 2006/95/EC on low voltage;
- Directive 2004/108/EC on electromagnetic compatibility

Harmonised standards :
-UNI EN 676 Gas Burners
-CEI EN 60335-1 (Household and similar electrical appliances - Safety. Part 1: General requirements;
- EN 50165 Electrical equipment of non-electric appliances for household and similar purposes. Safety requirements.

National standards :
-UNI 7824: Monobloc nebulizer burners for liquid fuels. Characteristics and test methods

Gas - Heavy oil burners

European directives:
- Directive 2009/142/EC - Gas Appliances;
- Directive 2006/95/EC on low voltage;
- Directive 2004/108/EC on electromagnetic compatibility

Harmonised standards :
-UNI EN 676 (Gas Burners;
-CEI EN 60335-1 (Household and similar electrical appliances - Safety. Part 1: General requirements;
- EN 50165 Electrical equipment of non-electric appliances for household and similar purposes. Safety requirements.

National standards :
-UNI 7824: Monobloc nebulizer burners for liquid fuels. Characteristics and test methods).

PART I - INSTALLATION

Burner model identification

Burners are identified by burner type and model. Burner model identification is described as follows.

Type PN60 (1)	**Model** N-. (2) PR. (3) S. (4) *. (5) A. (6)
(1) BURNER TYPE	PN60
(2) FUEL	N – heavy oil, viscosity ≤ 50 cSt (7°E) @ 50° C E – heavy oil, viscosity ≤ 110 cSt (15°E) @ 50° C D - heavy oil, viscosity ≤ 400 cSt (50°E) @50° C P – petroleum, viscosity 89 cSt (12°E) @50° C
(3) OPERATION	PR - Progressive MD – Fully-modulating
(4) BLAST TUBE	S - standard
(5) DESTINATION COUNTRY	* - see burner ID plate
(6) EQUIPMENT	A – standard Y - special

Specification

BRUCIATORI		**PN60**	**PN70**	**PN81**
Output	min - max kW	151-791	291-1047	264-1900
Fuel		Heavy oil		
Oil viscosity		See “Burner model identification”		
Oil flow rate	min. - max. kg/h	13.5 - 70	26 - 93	23.5 - 169
Oil train inlet pressure (viscosity ≤ 50cSt)	bar	1.5 max		
Oil train inlet pressure (viscosity > 50cSt)	bar	2.5 max		
Power supply		230/400V 3N ~ 50Hz		
Total power consumption (heavy oil)	kW	6.1	10.7	15.5
Total power consumption (petroleum)	kW	3.1	5.4	8.6
Fan motor	kW	1.1	2.2	3
Pre-heater resistor (heavy oil)	kW	4.5	8	12
Pre-heater resistor (petroleum)	kW	1.5	2.7	4
Protection		IP40		
Approx. weight	kg	130	155	155
Operation		Progressive - Fully-modulating		
Operating temperature	°C	-10 ÷ +50		
Storage Temperature	°C	-20 ÷ +60		
Working service*		Intermittent		

Heavy oil net calorific value (Hi): 41.29 MJ/kg.

*** NOTE ON THE BURNER WORKING SERVICE**

Burners provided with Siemens LOA control box: for safety reasons, one controlled shutdown must take place every 24 hours.

Burners provided with Siemens LMO control box: the control box automatically stops after 24h of continuous working. The control box immediately starts up, automatically.

Overall dimensions (mm)

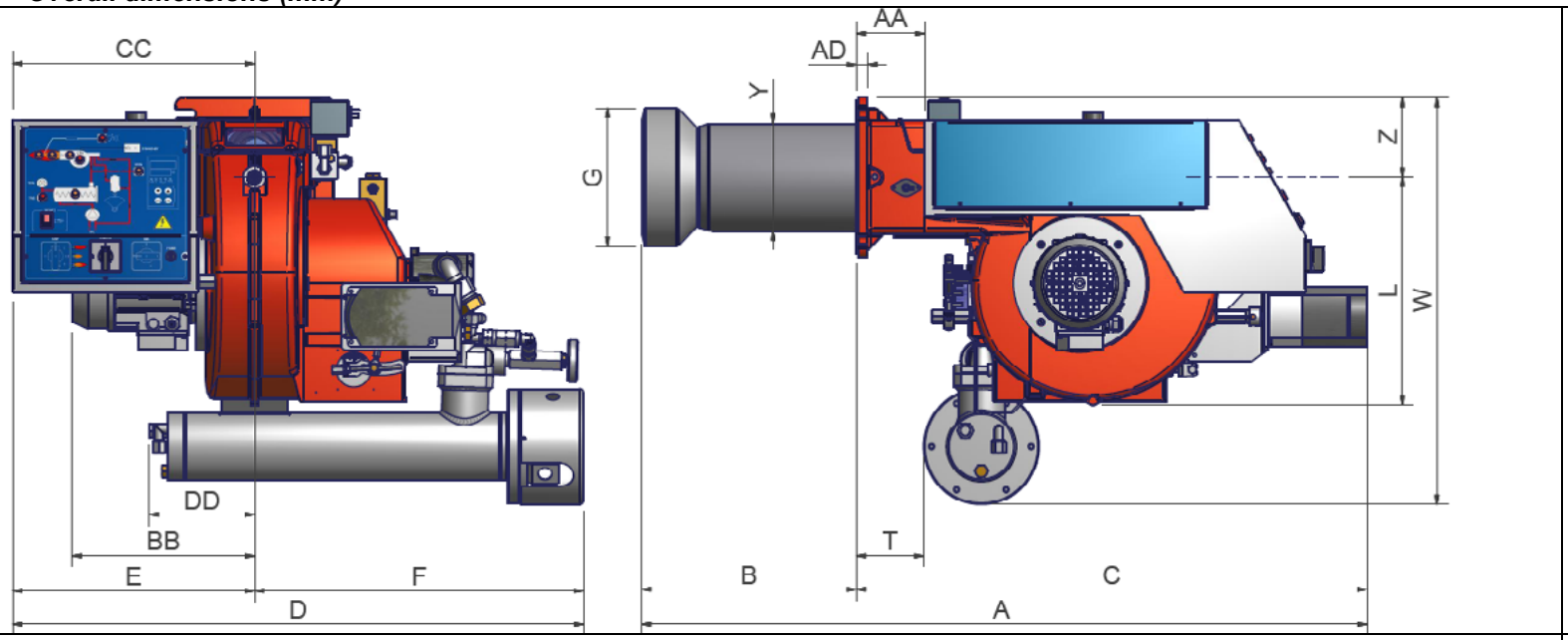

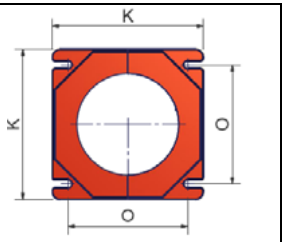

Burner flange

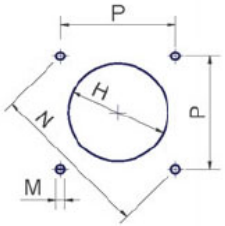

Boiler recommeded drilling template

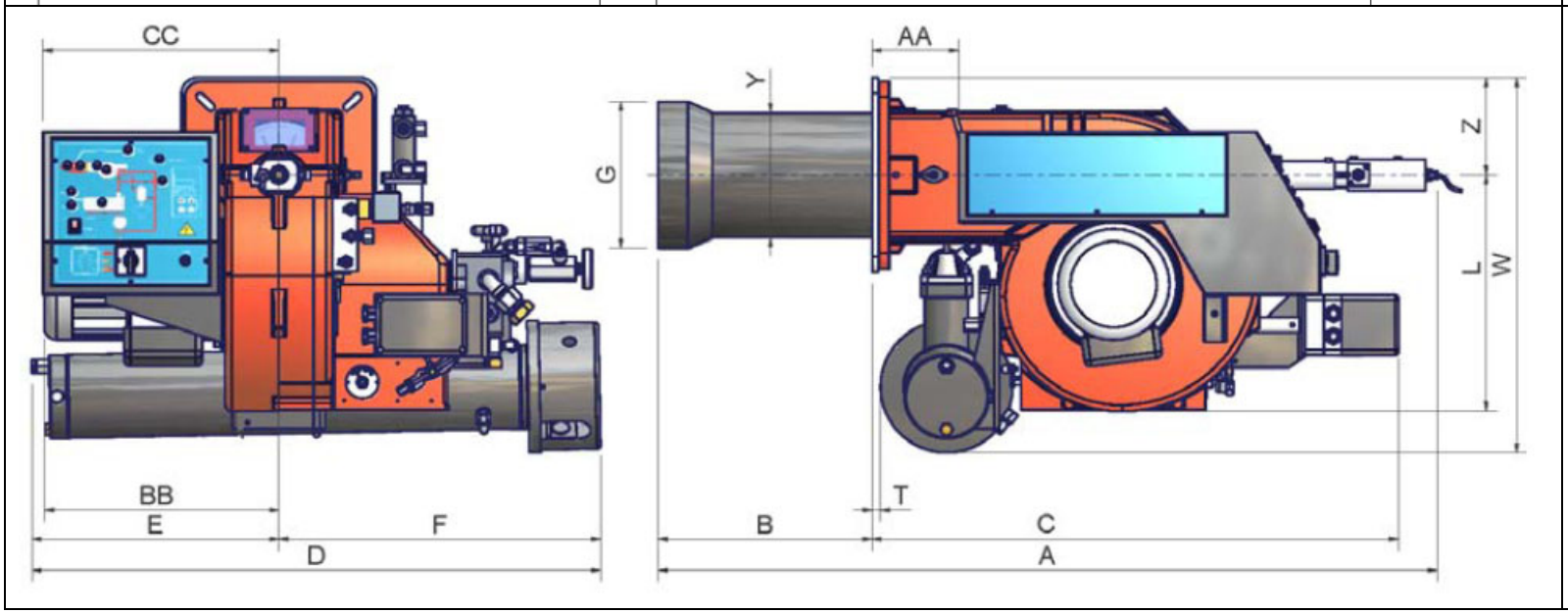

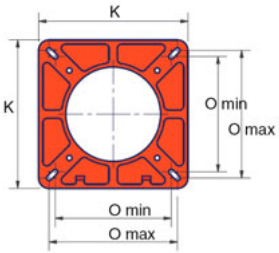

Burner flange

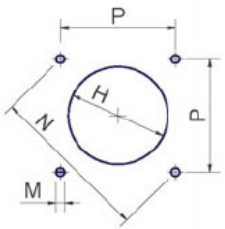

Boiler recommeded drilling template

	A	A (AL)	AA	B	B (BL)	BB	C	CC	D	DD	E	F	G	H	K	L	M	N	O min	O max	P	T	W	Y	Z
PN60	1051	1186	102	324	459	274	727	365	861	159	365	496	208	238*	240	344	M10	269	190	190	190	92	613	162	120
PN70	1244	1394	138	407	557	373	837	376	871	x	360	511	220	250	300	475	M10	330	216	250	233	14	630	198	155
PN81	1239	1389	138	340	490	373	837	376	903	392	392	511	234	264	300	376	M10	330	216	250	233	14	598	198	155

* ATTENTION: it is recommended to mount a counterflange between burner and bolier.

Performance curves

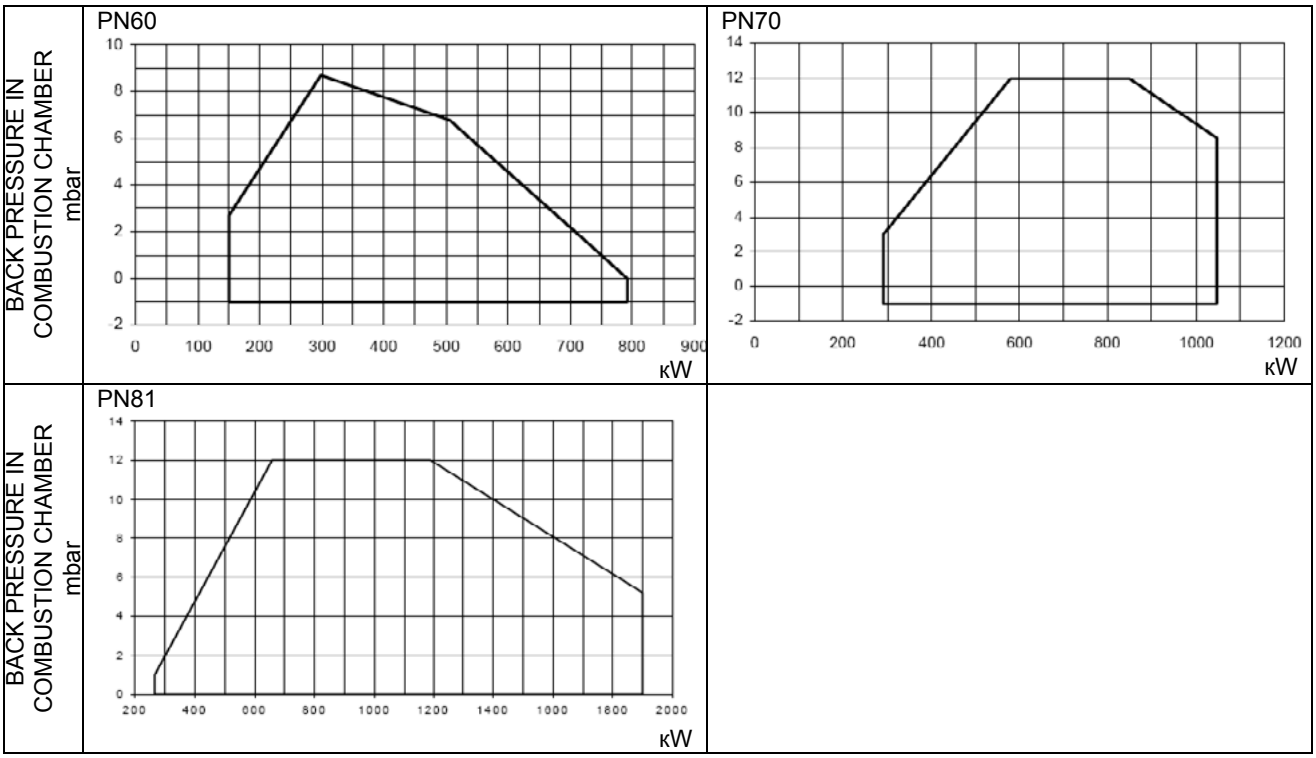

To get the input in kcal/h, multiply value in kW by 860.
Data are referred to the following conditions: 1013mbar atmospheric pressure, 15°C ambient temperature**.**

NOTE: The performance curve is a diagram that represents the burner performance in the type approval phase or in the laboratory tests, but does not represent the regulation range of the machine. On this diagram the maximum output point is usually reached by adjsuting the combustion head to its “MAX” position (see paragraph “Adjusting the combustion head”); the minimum output point is reached setting the combustion head to its “MIN” position. During the first ignition, the combustion head is set in order to find a compromise between the burner output and the generator specifications, that is why the minimum output may be different from the Performance curve minimum.

MOUNTING AND CONNECTING THE BURNER

Packing

The burners are despatched wooden cages whose dimensions are:

PN60: 1210 mm x 1020 mm x 790 mm (L x P x H)

PN70 - PN81: 1580 mm x 1010 mm x 860 mm (L x P x H)

The following are placed in each packing case.

- burner;
- gasket to be inserted between burner and boiler;
- oil flexible hoses;
- oil filter;
- envelope containing documents.

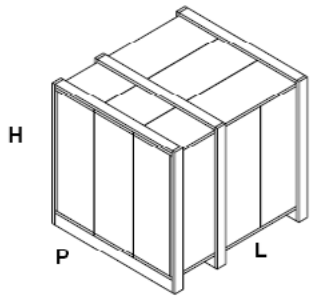

Packing cases of this kind are affected by humidity and are not suitable for stacking.

To get rid of the burner's packing, follow the procedures laid down by current laws on disposal of materials.

Handling the burner

⚠	ATTENTION! The handling operations must be carried out by specialised and trained personnel. If these operations are not carried out correctly, the residual risk for the burner to overturn and fall down still persists.
	To move the burner, use means suitable to support its weight (see paragraph "Technical specifications"). The unpacked burner must be lifted and moved only by means of a fork lift truck.

The burner is mounted on a stirrup provided for handling the burner by means of a fork lift truck: the forks must be inserted into the A anb B ways. Remove the stirrup only once the burner is installed to the boiler.

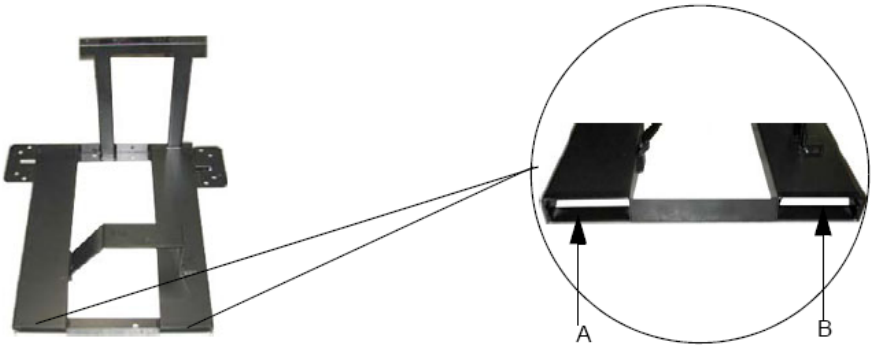

The burner is designed to work positioned according to the picture below. Set the upper side of the burner flange in a horizontal position, in order to find the correct inclination of the pre-heating tank. For different installations, please contact the Technical Department.

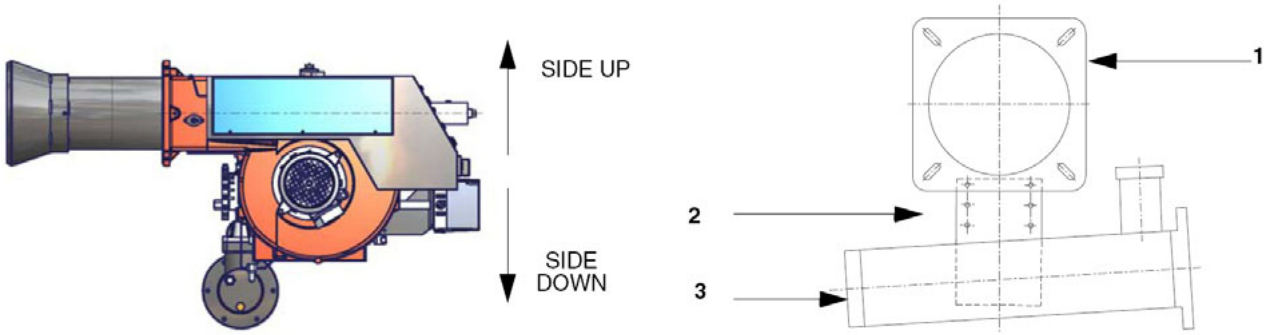

Keys

1 Burner flange (upper side indicated)
2 Bracket
3 Pre-heating tank on the burner

Fitting the burner to the boiler

To install the burner into the boiler, proceed as follows:

1 make a hole on the closing door of the combustion chamber as described on paragraph “Overall dimensions”)
2 place the burner to the boiler: lift it up and handle it according to the procedure described on paragraph “Handling the burner”;
3 place the 4 stud bolts (5), according to the burner’s drilling plate described on paragraph “Overall dimensions”;
4 fasten the 4 stud bolts;
5 place the gasket on the burner flange;
6 install the burner into the boiler;
7 fix the burner to the stud bolts, by means of the fixing nuts, according to the next picture.
8 After fitting the burner to the boiler, ensure that the gap between the blast tube and the refractory lining is sealed with appropriate insulating material (ceramic fibre cord or refractory cement).
9 .

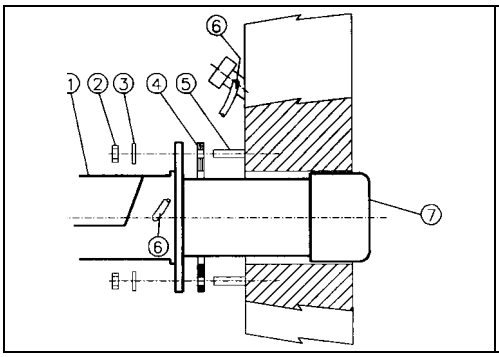

Keys
1 Burner
2 Fixing nut
3 Washer
4 Ceramic fibre plait
5 Stud bolt
7 Blast tube

Matching the burner to the boiler

The burners described in this manual have been tested with combustion chambers that comply with EN676 regulation and whose dimensions are described in the diagram . In case the burner must be coupled with boilers with a combustion chamber smaller in diameter or shorter than those described in the diagram, please contact the supplier, to verify that a correct matching is possible, with respect of the application involved. To correctly match the burner to the boiler verify the necessary input and the pressure in combustion chamber are included in the burner performance curve; otherwise the choice of the burner must be revised consulting the burner manufacturer. To choose the blast tube lenght follow the instructions of the boiler manufacturer. In absence of these consider the following:

- Cast-iron boilers, three pass flue boilers (with the first pass in the rear part): the blast tube must protrude for a value between 0 and 100 mm into the combustion chamber.
- Pressurised boilers with flame reversal: in this case the blast tube must penetrate at least 50 - 100 mm into combustion chamber in respect to the tube bundle plate.

The length of the blast tubes does not always allow this requirement to be met, and thus it may be necessary to use a suitably-sized spacer to move the burner backwards or to design a blast tube tha suites the utilisation (please, contact the manifacturer).

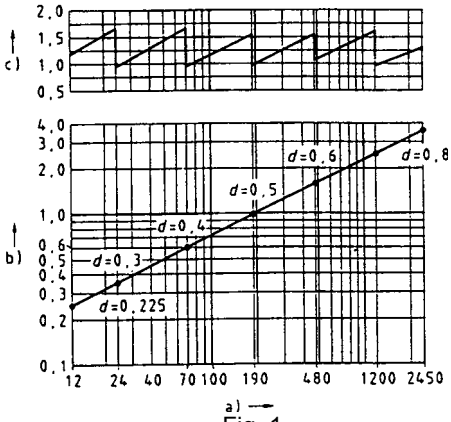

Fig. 1

Keys

a) Heat output in kW

b) Length of the flame tube in meters

c) Flame tube firing intensity in MW/m3

d) Combustion chamber diameter (m)

Fig.1: Firing intensity, diameter and lenght of the test flame tube as a function of the heat input in kW

Hydraulic circuit

The pumps that are used can be installed both into single-pipe and double-pipe systems.

Single-pipe system: a single pipe drives the oil from the tank to the pump's inlet. Then, from the pump, the pressurised oil is driven to the nozzle: a part comes out from the nozzle while the othe part goes back to the pump. In this system, the by-pass pulg, if provided, must be removed and the optional return port, on the pump's body, must be sealed by steel plug and washer.

Double-pipe system: as for the single pipe system, a pipe that connects the tank to the pump's inlet is used besides another pipe that connects the pum's return port to the tank, as well. The excess of oil goes back to the tank: this installation can be considered self-bleeding. If provided, the inside by-pass plug must be installed to avoid air and fuel passing through the pump.

Burners come out from the factory provided for double-stage systems. They can be suited for single-pipe system (recommended in the case of gravity feed) as decribed before. To change from a 1-pipe system to a 2-pipe-system, insert the by-pass plug G (as for ccw-rotation- referring to the pump shaft).

⚠	**Caution**: Changing the direction of rotation, all connections on top and side are reversed.

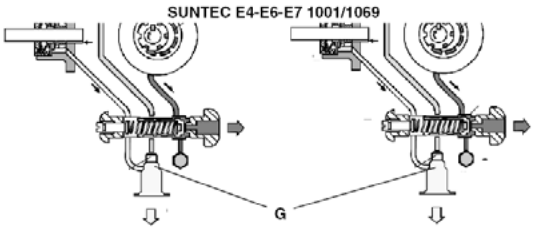

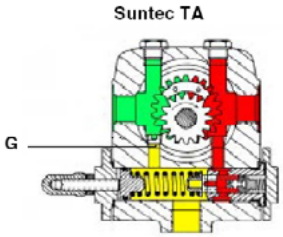

Bleed

Bleeding in two-pipe operation is automatic: it is assured by a bleed flat on the piston. In one-pipe operation, the plug of a pressure gauge port must be loosened until the air is evacuated from the system.

Fuel	PUMPS	Burner		
1 - Heavy oil, viscosity ≤ 50cSt (7° E) @ 50° C 2 - Heavy oil, viscosity ≤ 110cSt (15°E) @ 50° C 3 - Heavy oil, viscosity ≤ 400cSt (50° E) @ 50° C P - Petroleum, viscosity 89cSt (12° E) @ 50° C		**PN60**	**PN70**	**PN81**
1	E6 NC 1001	**X**	**X**	
2 - 3 - 4	E6 NC 1069	**X**	**X**	
1 - 2 - 3 - 4	TA2			**X**

About the use of fuel pumps

- Make sure that the by-pass plug is not used in a single pipe installation, because the fuel unit will not function properly and damage to the pump and burner motor could result.
- Do not use fuel with additives to avoid the possible formation over time of compounds which may deposit between the gear teeth, thus obstructing them.
- After filling the tank, wait before starting the burner. This will give any suspended impurities time to deposit on the bottom of the tank, thus avoiding the possibility that they might be sucked into the pump.
- On initial commissioning a "dry" operation is foreseen for a considerable length of time (for example, when there is a long suction line to bleed). To avoid damages inject some lubrication oil into the vacuum inlet.
- Care must be taken when installing the pump not to force the pump shaft along its axis or laterally to avoid excessive wear on the joint, noise and overloading the gears.
- Pipes should not contain air pockets. Rapid attachment joint should therefore be avoided and threaded or mechanical seal junctions preferred. Junction threads, elbow joints and couplings should be sealed with removable sg component. The number of junctions should be kept to a minimum as they are a possible source of leakage.
- Do not use PTFE tape on the suction and return line pipes to avoid the possibility that particles enter circulation. These could deposit on the pump filter or the nozzle, reducing efficiency. Always use O-Rings or mechanical seal (copper or aluminium gaskets) junctions if possible.
- An external filter should always be installed in the suction line upstream of the fuel unit.

Pumps

PN60-PN70

Pumps for heavy-oil viscosity ≤ 50 cSt (7° E) @ 50° C

Suntec E4 - E6 - E7 1001	
Viscosity	2.8 - 450 cSt
Oil temperature	0 - 90 °C
Min. suction pressure	- 0.45 bar to avoid gasing
Max. suction pressure	1.5 bar
Max. return pressure	1.5 bar
Rotation speed	3600 rpm

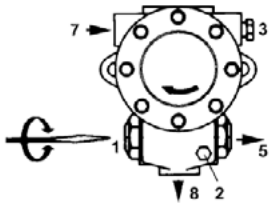

Pumps for heavy-oil viscosity ≤ 400 cSt (50° E) @ 50° C

Suntec E4 - E6 - E7 1069	
Viscosity	3 - 75 cСт
Oil temperature	0 - 120 °C
Min. suction pressure	- 0.45 bar to avoid gasing
Max. suction pressure	3.5 bar
Max. return pressure	3.5 bar
Rotation speed	3600 rpm

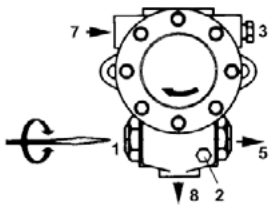

Keys
1 Pressure governor
2 Pressure gauge port G1/8
3 Vacuum gauge port G1/2
4 To the nozzle G1/4
5 Inlet G1/2
6 Return G1/2
Note for Suntec E pumps: 1069 pumps are provided with mechanical seals and heating electric cartridge (80W).

PN81

Suntec TA..	
Viscosity	3 - 75 cSt
Oil temperature	0 - 150 °C
Min. suction pressure	- 0.45 bar to avoid gasing
Max. suction pressure	5 bar
Max. return pressure	5 bar
Rotation speed	3600 rpm max.

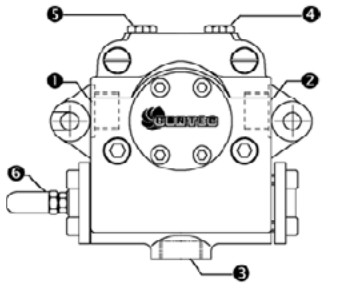

Keys
1) Inlet G1/2
2 To the nozzle G1/2
3) Return G1/2
4) Pressure gauge port G1/4
5) Vacuum gauge port G1/4
6) Pressure governor

Assembling the light oil flexible hoses

To connect the flexible light oil hoses to the pump, proceed as follows, according to the pump provided:

1. remove the closing nuts A and R on the inlet and return connections;
2. screw the rotating nut of the two flexible hoses on the pump being careful to avoid exchanging the inlet and return lines: see the arrows marked on the pump that show the inlet and the return (see prevoius paragraph).

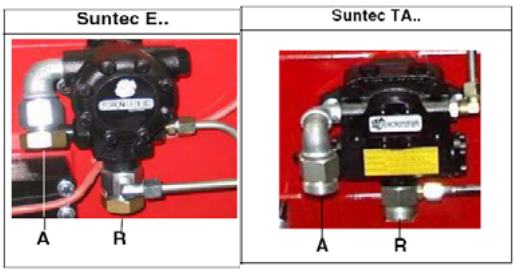

Connections to the oil gun (PN81)

1 Inlet
2 Return
3 Gun opening
4 Heating wire (only for viscosity > 50cSt (7°E) @ 50°C oil burners)
5 Cartdrige-type heater (only for viscosity > 50cSt (7°E) @ 50°C oil burners)

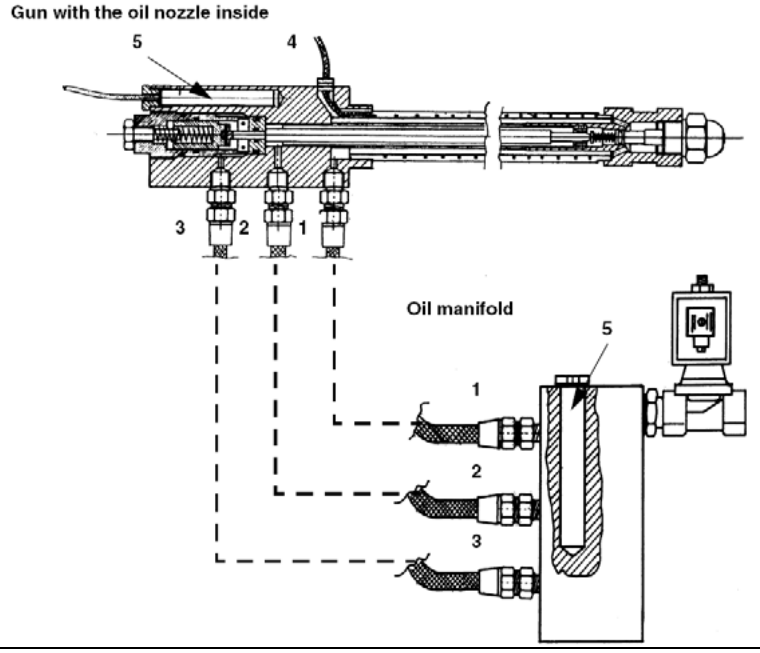

Recommendations to design heavy oil feeding plants

This paragraph is intended to give some suggestions to make feeding plants for heavy oil burners. To get a regular burner operation, it is very important to design the supplying system properly. Here some suggestions will be mentioned to give a brief description.

The term “heavy oil” is generic and summarises several chemical-physical properties, above all viscosity. The excessive viscosity makes the oil impossible to be pumped, so it must be heated to let it flow in the pipeline; because of the low-boiling hydrocarbons and dissolved gases, the oil must be also pressurised. The pressurisation is also necessary to feed the burner pump avoiding its cavitation because of the high suction at the inlet. The supplying system scope is to pump and heat oil.

The oil viscosity is referred in various unit measures; the most common are: °E, cSt, Saybolt and Redwood scales. Table 4 shows the various unit convertions (e.g.: 132 cSt viscosity corresponds to 17.5°E viscosity).

The diagram in Fig.2 shows how the heavy oil viscosity changes according to its temperature.

Example: an oil with 22°E viscosity at 50°C once heated to 100°C gets a 3 °E viscosity.

As far as the pumping capability, it depends on the type of the pump that pushes the oil even if on diagram in a generic limit is quoted at about 100 °E, so it is recommended to refer to the specifications of the pump provided.

Usually the oil minimum temperature at the oil pump inlet increases as viscosity does, in order to make the oil easy to pump. Referring to the diagram on Fig. 3, it is possible to realise that to pump an oil with 50°E viscosity at 50°C, it must be heated at about 80°C.

Pipe heating system

Pipe heating system must be provided, that is a system to heat pipes and plant components to mantain the viscosity in the pumping limits. Higher the oil viscosity and lower the ambient temperature, more necessary the pipe heating system.

Inlet minimum pressure of the pump (both for supplying system and burner)

A very low pressure leads to cavitation (signalled by its peculiar noise): the pump manifacturer declares the minimum value. Therefore, check the pump technical sheets. By increasing the oil temperature, also the minimum inlet pressure at the pump must increase, to avoid the gassification of the oil low-boiling products and the cavitation. The cavitation compromises the burner operation, it causes the pump to break too. The diagram on Fig. 4 roughly shows the inlet pump pressure according to the oil temperature.

Pump operating maximum pressure (both for the supplying system and burner)

Remember that pumps and all the system components through which the oil circulates, feature an upper limit. Always read the technical documentation for each component. Schemes on Fig. 6 and Fig. 7 are taken from UNI 9248 "liquid fuel feeding lines from tank to burner" standard and show how a feeding line should be designed. For other countries, see related laws in force. The pipe dimensioning, the execution and the winding dimensioning and other construcitve details must be provided by the installer.

Adjusting the supplying oil ring

According to the heavy oil viscosity used, in the table below indicative temperature and pressure values to be set are shown.

Note: the temperature and pressure range allowed by the supplying ring components must be checked in the specifications table of the components themselves

HEAVY OIL VISCOSITY AT 50 °C		PIPELINE PRESSURE	PIPELINE TEMPERATURE
cSt (°E)		bar	°C
	< 50 (7)	1 - 2	20
> 50 (7)	< 110 (15)	1 - 2	50
> 110 (15)	< 400 (50)	1 - 2	65

Tab. 1

Burner adjustments

The table below shows indicative values of temperature and pressure to be set on the burner devices, according to the viscosity of the heavy oil used. The oil temperature should be set on TR resistor thermostat in order to get about 1.5°E viscosity at the nozzle.

VISCOSITY AT 50 °C		NOZZLE PRESSURE MEASURED IN THE GUN	RETURN NOZZLE PRESSURE)		TEMPERATURE FOR RESISTOR THERMOSTAT TR		TEMPERATURE FOR SAFETY RESISTOR THERMOSTAT TRS	TEMPERATURE FOR THERMOSTAT TCN	TEMPERATURE FOR THERMOSTAT TCI
		.	MIN.	MAX.	MIN.	MAX.			
cSt (°E)		bar	bar		°C		°C		°C
	< 50 (7)	25	7-9	19-20	100	120	190-200	80	100
> 50 (7)	< 110 (15)	25	7-9	19-20	120	130	190-200	100	110
> 110 (15)	< 400 (50)	25	7-9	19-20	130	140	190-200	110	120
89 (12)		25	7-9	19-20	60	70	190-200	40	50

Tab. 2 –Fluidics nozzles

VISCOSITY AT 50 °C		NOZZLE PRESSURE MEASURED IN THE GUN	RETURN NOZZLE PRESSURE)		TEMPERATURE FOR RESISTOR THERMOSTAT TR		TEMPERATURE FOR SAFETY RESISTOR THERMOSTAT TRS	TEMPERATURE FOR THERMOSTAT TCN	TEMPERATURE FOR THERMOSTAT TCI
		.	MIN.	MAX.	MIN.	MAX.			
cSt (°E)		bar	bar		°C		°C	°C	°C
	< 50 (7)	25	5-7	11-13	100	120	190-200	80	100
> 50 (7)	< 110 (15)	25	5-7	11-13	120	130	190-200	100	110
> 110 (15)	< 400 (50)	25	5-7	11-13	130	140	190-200	110	120
89 (12)		25	5-7	11-13	60	70	190-200	40	50

Tab. 3 – ugelli Bergonzo A

Viscosity units conversion table

Cinematics viscosity Centistokes (cSt)	Engler degrees (°E)	Saybolt Seconds Universal (SSU)	Saybolt Seconds Furol (SSF)	Redwood n.1 Seconds (Standard)	Saybolt n. 2 Seconds (Admiralty)
1	1	31	--	29	--
2.56	1.16	35	--	32.1	--
4.3	1.31	40	--	36.2	5.1
7.4	1.58	50	--	44.3	5.83
10.3	1.88	60	--	52.3	6.77
13.1	2.17	70	12.95	60.9	7.6
15.7	2.45	80	13.7	69.2	8.44
18.2	2.73	90	14.44	77.6	9.3
20.6	3.02	100	15.24	85.6	10.12
32.1	4.48	150	19.3	128	14.48
43.2	5.92	200	23.5	170	18.9
54	7.35	250	28	212	23.45
65	8.79	300	32.5	254	28
87.6	11.7	400	41.9	338	37.1
110	14.6	500	51.6	423	46.2
132	17.5	600	61.4	508	55.4
154	20.45	700	71.1	592	64.6
176	23.35	800	81	677	73.8
198	26.3	900	91	762	83
220	29.2	1000	100.7	896	92.1
330	43.8	1500	150	1270	138.2
440	58.4	2000	200	1690	184.2
550	73	2500	250	2120	230
660	87.6	3000	300	2540	276
880	117	4000	400	3380	368
1100	146	5000	500	4230	461
1320	175	6000	600	5080	553
1540	204.5	7000	700	5920	645
1760	233.5	8000	800	6770	737
1980	263	9000	900	7620	829
2200	292	10000	1000	8460	921
3300	438	15000	1500	13700	--
4400	584	20000	2000	18400	--

Tab. 4

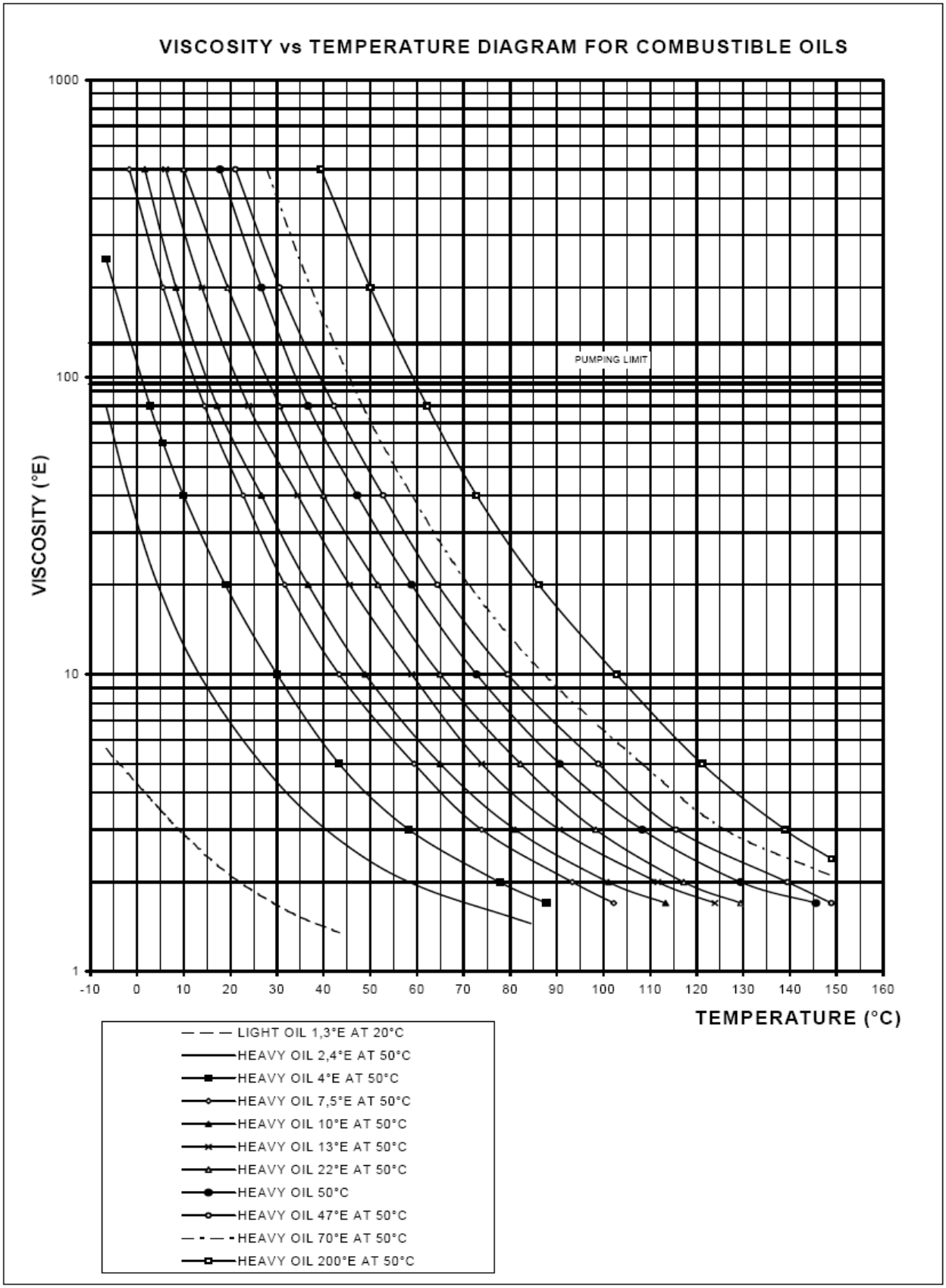
VISCOSITY vs TEMPERATURE DIAGRAM FOR COMBUSTIBLE OILS
1000
100
10
1
VISCOSITY (°E)
PUMPING LIMIT
-10
0
10
20
30
40
50
60
70
80
90
100
110
120
130
140
150
160
TEMPERATURE (°C)
LIGHT OIL 1,3°E AT 20°C
HEAVY OIL 2,4°E AT 50°C
HEAVY OIL 4°E AT 50°C
HEAVY OIL 7,5°E AT 50°C
HEAVY OIL 10°E AT 50°C
HEAVY OIL 13°E AT 50°C
HEAVY OIL 22°E AT 50°C
HEAVY OIL 50°C
HEAVY OIL 47°E AT 50°C
HEAVY OIL 70°E AT 50°C
HEAVY OIL 200°E AT 50°C

Fig. 2

Indicative diagram showing the oil temperature at burner pump inlet vs. oil viscosity
Example: if the oil has a 50°E @ 50°C viscosity, the oil temperature at the pump inlet should be 80°C (see diagram).

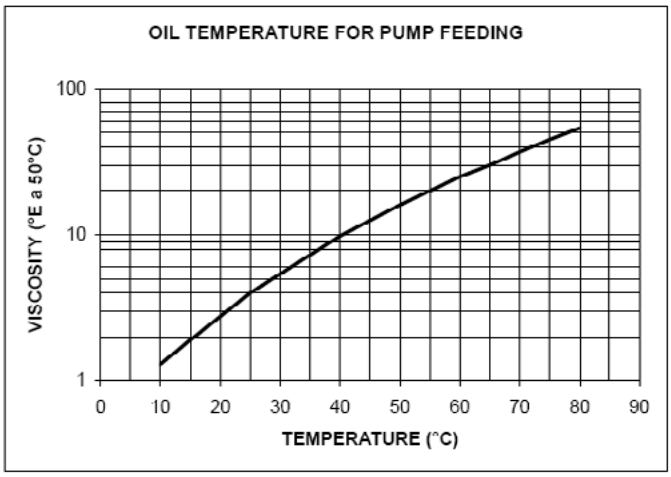

Fig. 3

Indicative diagram showing the oil pressure according to its temperature.

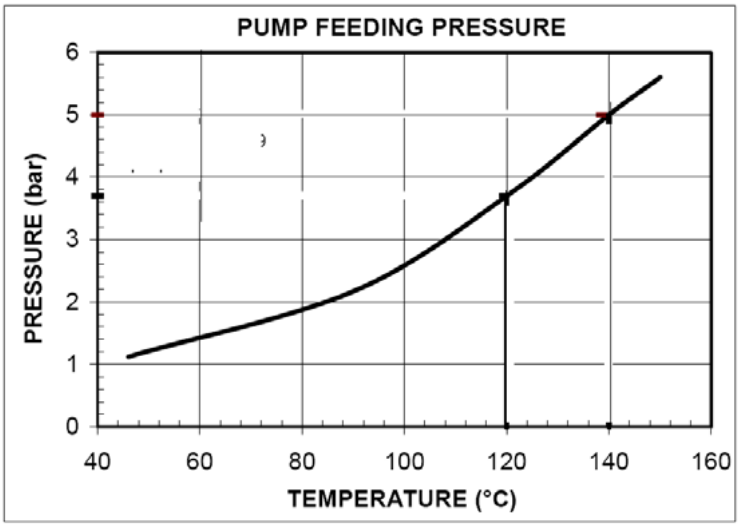

Fig. 4

Indicative diagram showing the oil atomising temperature according to its viscosity
Example: if the oil has a 50°E @ 50°C viscosity, the oil atomising temperature should be between 145°C and 160°C (see diagram).

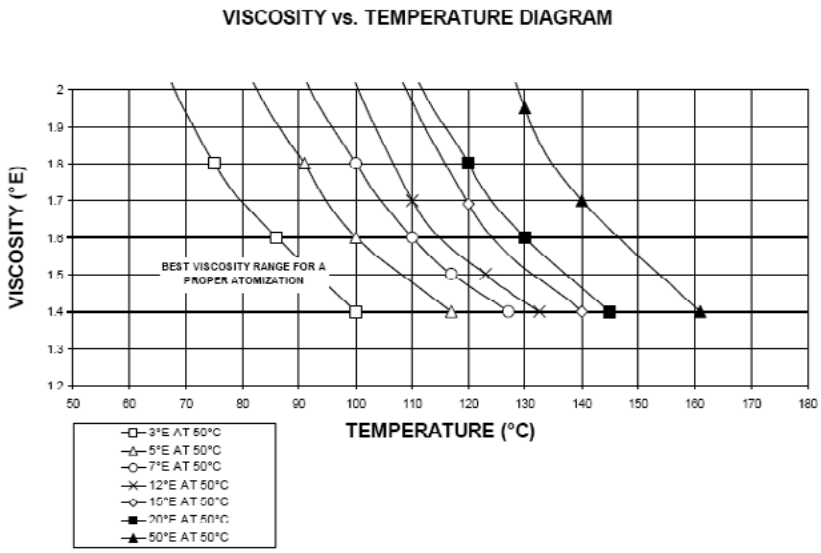

Fig. 5

Hydraulic schemes

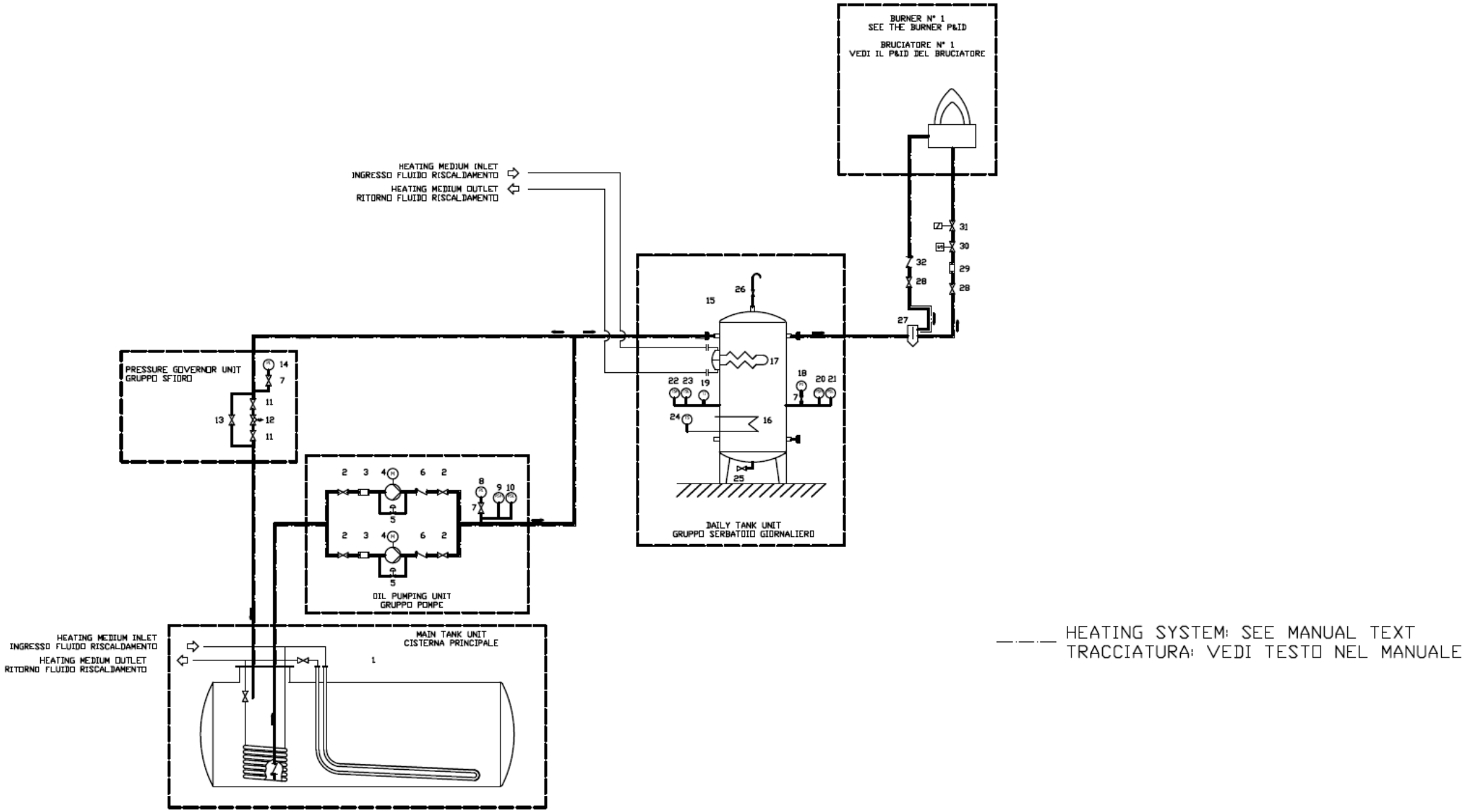

Fig. 6 –3ID0023 - Single burner configuration

	KEYS
POS	**OIL TRAIN**
1	Main tank
	OIL PUMPING UNIT
2	Manual valve
3	Filter
4	Pump coupled to electrical motor
5	Safety valve
6	One-way valve
7	Manual valve
8	Pressure gauge
9	Maximum pressure switch
10	Minimum pressure switch
	PRESSURE GOVERNOR UNIT
11	Manual valve
12	Pressure governor
13	Needle valve
14	Pressure gauge
	DAILY TANK
15	Daily tank
16	Electrical resistor
17	Heating device
18	Pressure gauge
19	Thermometer
20	High pressure switch
21	Low pressure switch
22	Thermostat (high)
23	Thermostat (low)
24	Thermostat
25	Manual valve
26	Manual valve
	TO THE BURNER
27	Degassing bottle
28	Manual valve
29	Filter (supplied loose with the burner)
30	Solenoide valve
31	Safety valve
31	One-way valve

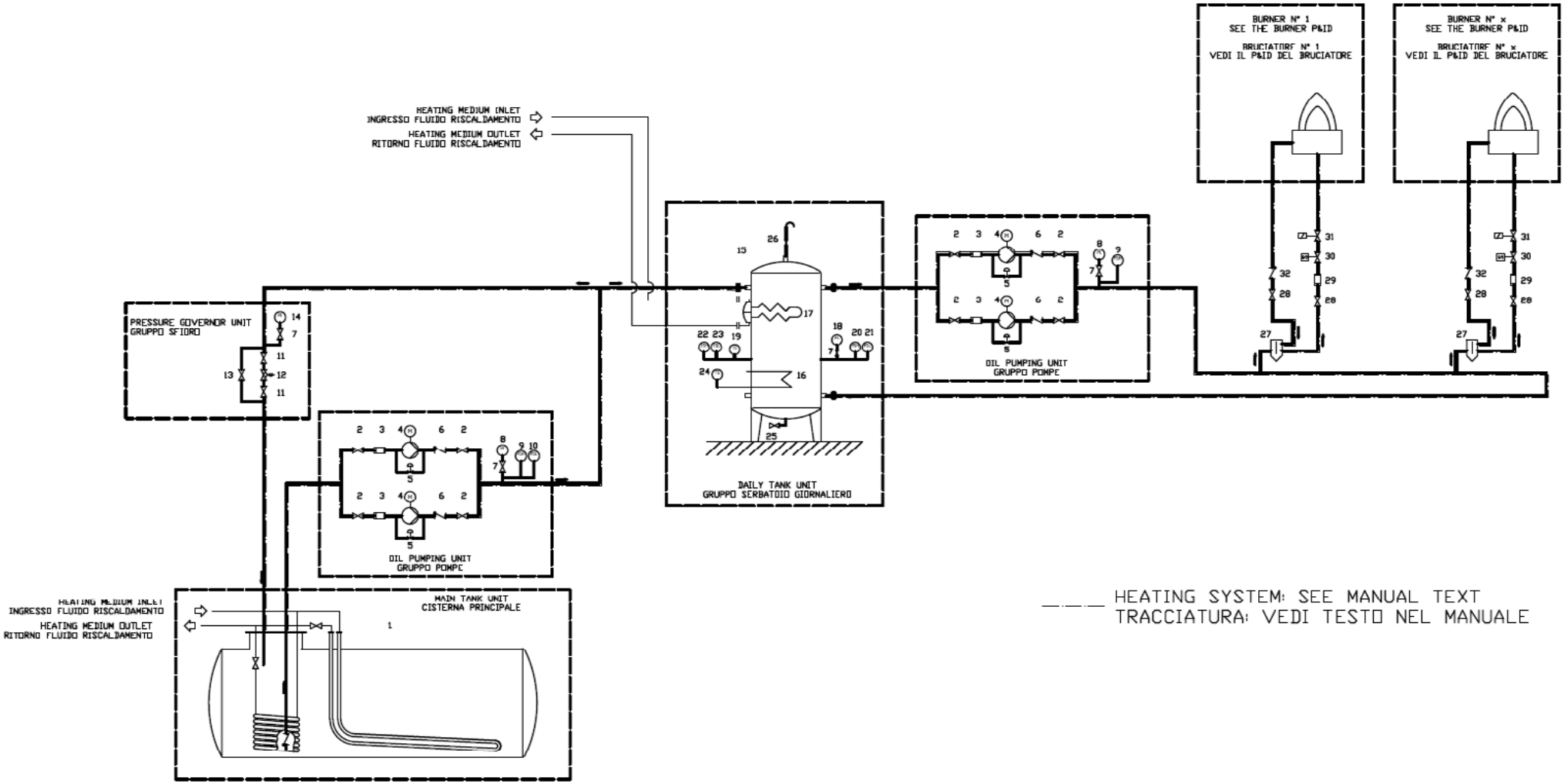

Fig. 7 - 3ID0014 - Two or more burners configuration

	KEYS
POS	**OIL TRAIN**
1	Filter
2	Pump and pressure governor
3	Electrical motor
33	Pressure gauge with manual valve
4	Electrical preheater tank
4.1	Electrical preheater tank
5	Thermostat - TR
6	Low thermostat - TCN
7	High thermostat - TRS
8	Thermometer
9	3-way solenoid valve
10	Flexible hose
11	Flexible hose
12	Flexible hose
13	Oil distributor
14	Low thermostat - TCI
15	Pressure governor
16	Flexible hose
17	Burner
	COMBUSTION AIR TRAIN
18	Air damper with actuator
19	Pressure switch - PA
20	Draught fan with electromotor
	MAIN GAS TRAIN
21	Filter
22	Pressure switch - PGMIN
23	Safety valve with built in gas governor
24	Proving system pressure switch - PGCP
25	Pressure switch - PGMAX
26	Butterfly valve

NOTE POS 33 is an optional supply

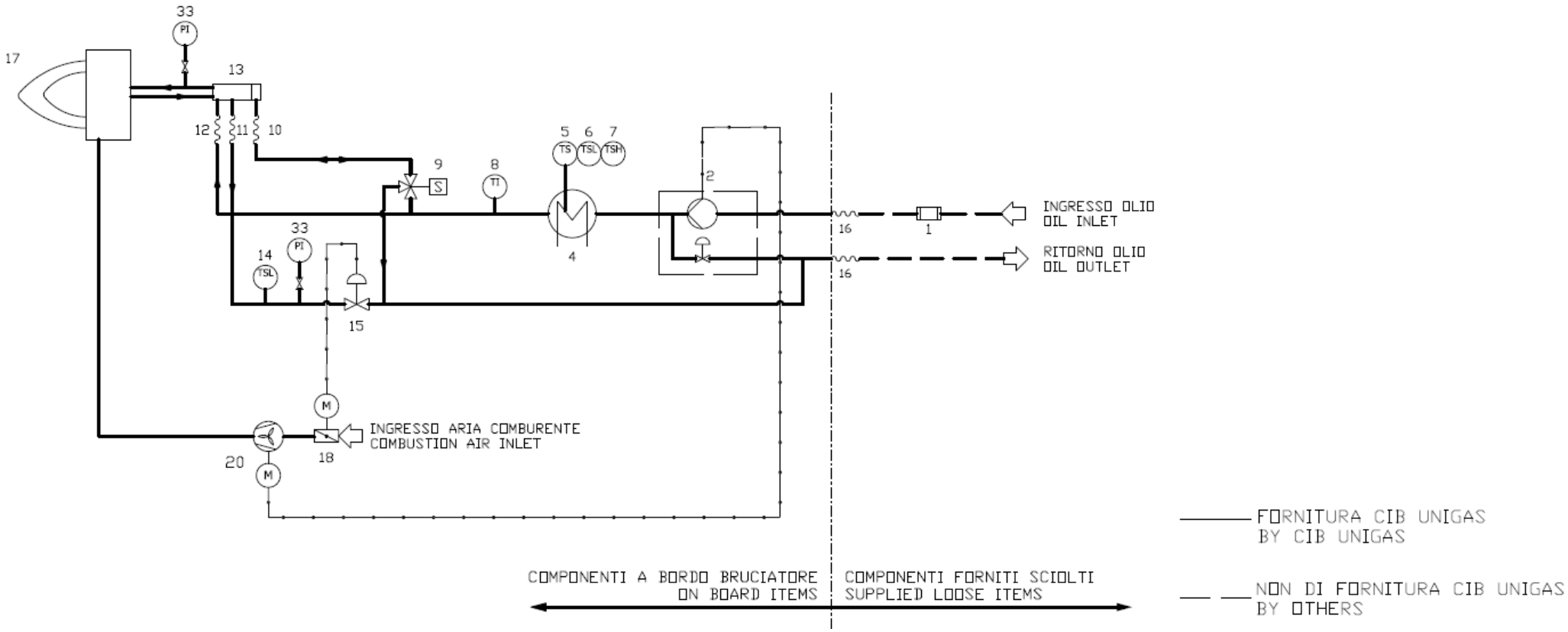

Fig. 8 – P&ID 3I2D-06 – PN81

ATTENTION: connect the oil outlet line to the degassing bottle (standard UNI 9248), as shown in the previous paragraph "RECOMMENDATIONS TO DESIGN HEAVY OIL FEEDING PLANTS"

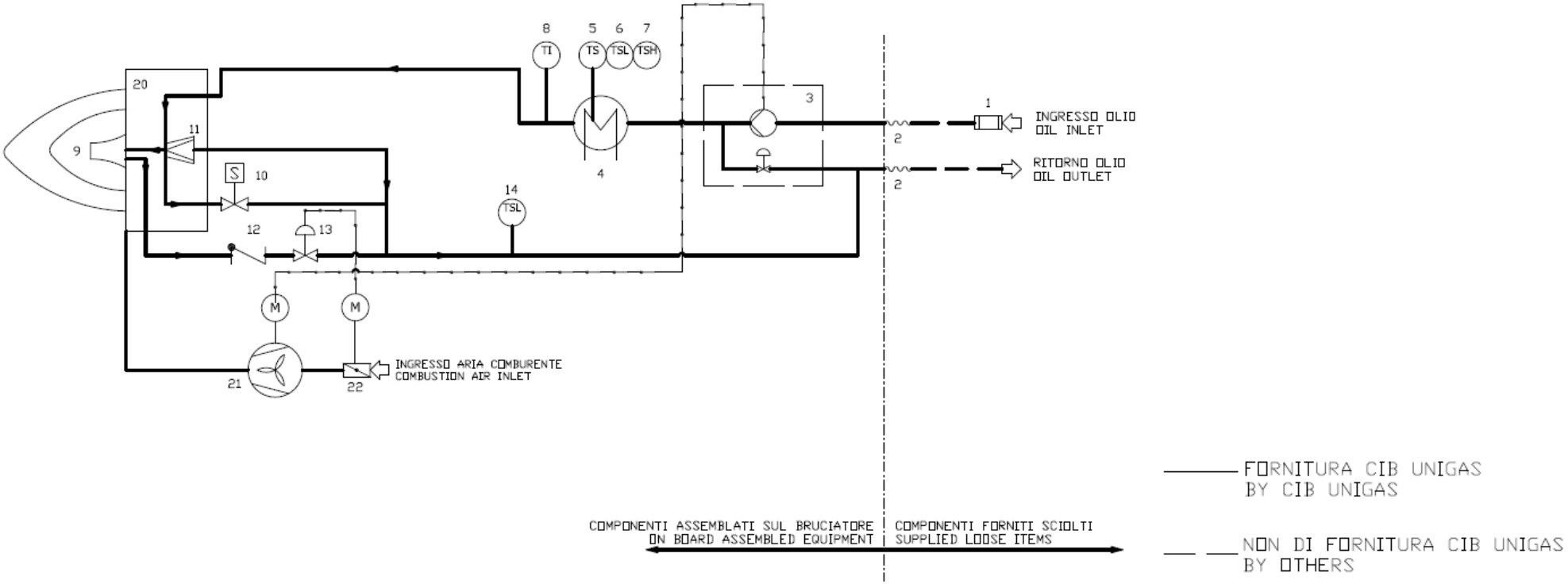

Fig. 9 – P&ID 3I2D-14 – PN60-70

ATTENTION: connect the oil outlet line to the degassing bottle (standard UNI 9248), as shown in the previous paragraph "RECOMMENDATIONS TO DESIGN HEAVY OIL FEEDING PLANTS"

3I2D-06	KEYS
POS	**OIL TRAIN**
1	Filter
2	Pump and pressure governor
4	Electrical preheater tank
5	Thermostat - TR
6	Low thermostat - TCN
7	High thermostat - TRS
8	Thermometer
9	3-way solenoid valve
10	Flexible hose
11	Flexible hose
12	Flexible hose
13	Oil distributor
33	Pressure gauge with manual valve
14	Low thermostat - TCI
15	Pressure governor
16	Flexible hose
17	Burner
	COMBUSTION AIR TRAIN
18	Air damper with actuator
20	Draught fan with electromotor

NOTE POS 33 is an optional supply

3I2D-14	KEYS
1	Filter
2	Flexible hose
3	Pump and pressure governor
4	Pre-heater tank
5	Thermostat - TR
6	Low thermostat - TCN
7	High thermostat - TRS
8	Thermometer
9	Nozzle
10	Solenoid valve - EVN - NO
11	Nozzle shut off needle
12	One way valve
13	Pressure governor
14	Thermostat - TCI
20	Burner
21	Draught fan with electromotor
22	Air damper with servomotor

Electrical connections

⚠	**Respect the basic safety rules. make sure of the connection to the earthing system. do not reverse the phase and neutral connections. fit a differential thermal magnet switch adequate for connection to the mains.**
	ATTENTION: before executing the electrical connections, pay attention to turn the plant's switch to OFF and be sure that the burner's main switch is in 0 position (OFF) too. Read carefully the chapter "WARNINGS", and the "Electrical connections" section.

- Remove the cover of the electrical board mounted on the burner.
- Execute the electrical connections to the power supply terminal board as shown here following, check the direction of rotation of the fan motor (see next paragraph) and refit the electrical board cover.

⚠	**WARNING: The burner is provided with a jumper between terminals 6 and 7; in the event of connecting the high/low flame thermostat remove this jumper before connecting the thermostat**
	IMPORTANT: while connecting electric supply wires to burner's teminal block be sure that ground wire should be longer than phase and neutral ones.
	ATTENZIONE: auxiliary contacts are provided (terminals no. 507 and no. 508 of the MA terminal block) to connect an intervention system (alarm/power supply cutoff) in case of fault of the oil resistor contactor (see Attached wiring diagrams).

Rotation of fan motor and pump motor

Once the electrical connection of the burner is executed, remember to check the rotation of the motor. The motor should rotate according to the indication on the body. In the event of wrong rotation, reverse the three-phase supply and check again the rotation of the motor.

NOTE: burners are supplied for three-phase 400V supply, and in the case of three-phase 230V supply it is necessary to modify the electrical connections into the terminal box of the electric motor and replace the overload tripped relay..

⚠	CAUTION: adjust the thermal cut-out according to the motor rated current value.

Connecting the oil heating resistors

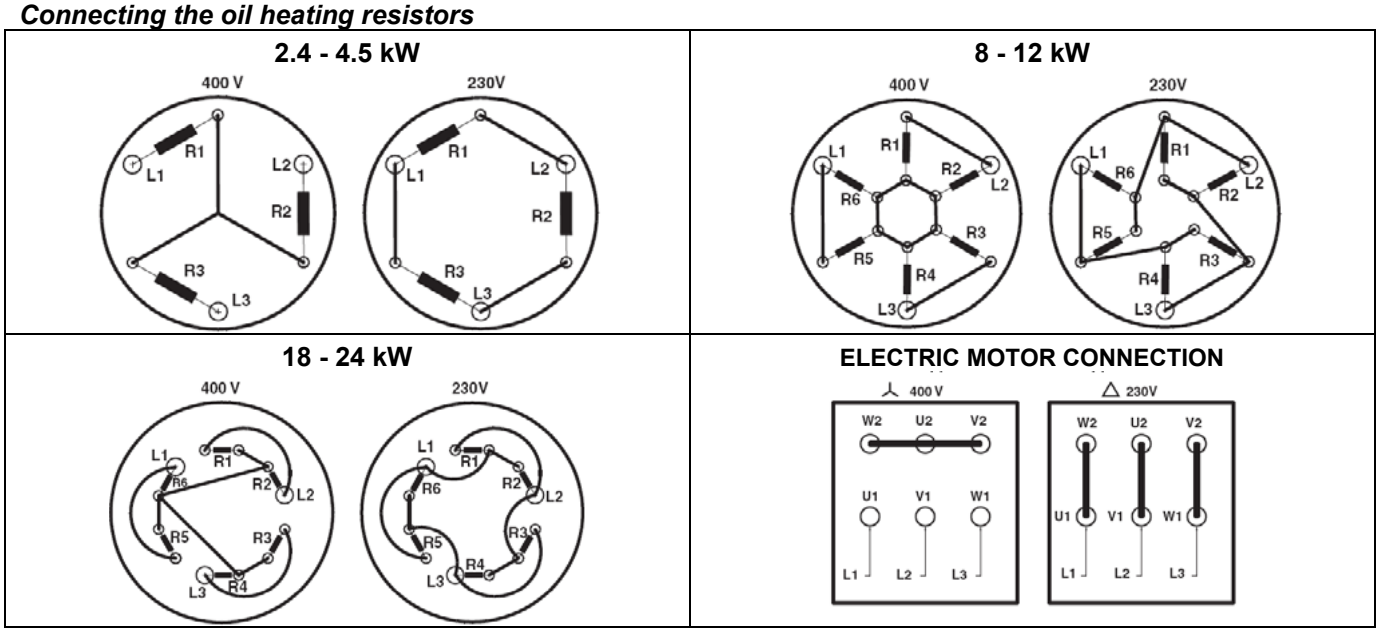

Oil thermostat adjustment

To find the thermostats, remove the cover of the burner switchboard. Adjust them using a screwdriver on the VR screw as shown in the next picture. As far as burner provided with electronic thermostat (on the control panel), see the attached manual.

NOTE: thermostat TCI is provided on burners fired with fuel oil having a 50° E at 50° C viscosity only.

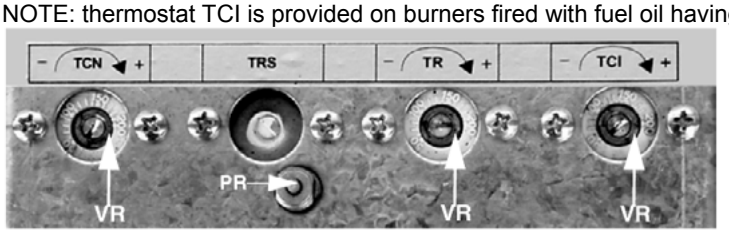

Electronic thermostat

TCN - Oil enabling thermostat: Adjust this thermostat to a value 10% lower than that shown in the viscosity-temperature diagram.

TRS - Resistor safety thermostat: The thermostat is set during factory testing at about 190° C.

This thermostat trips when the operating temperature exceeds the set limit. Ascertain the cause of the malfunction and reset the thermostat by means of the PR button.

TR - Resistor thermostat: Adjust this thermostat to the correct value according to the viscosity-temperature diagram and check the temperature by using a thermometer mounted on the pre-heating tank.

TCI - Ignition enabling thermostat: This thermostat is fitted on burners fired with oil at a 400cSt (at 50°C) viscosity only. Set this thermostat according to the data at page 13.

Thermostat adjustment for petroleum burners

To find the thermostats, remove the burner switchboard cover. Adjust them using a screwdriver on the VR screw as shown in the next picture.

TCI -Ignition enabling thermostat: Set this thermostat to about 50° C.

TCN - Oil enabling thermostat: Adjust this thermostat at about 40°C. Anyway, set TCN to a value possibly lower than the one set for TR (see below).

TR - Resistor thermostat: Adjust this thermostat to a value between 60 and 70°C (data at page 13). Check the temperature by using a thermometer mounted on the pre-heating tank.

TRS - Resistor safety thermostat: The thermostat is set during factory testing at about 190° C.

This thermostat trips when the operating temperature exceeds the set limit. Ascertain the cause of the malfunction and reset the thermostat by means of the PR button (see picture).

⚠	**CAUTION:** even if the adjusting ranges for the TR (Resistor thermostat) and TCN (Oil enabling thermostat) are the same, set TCN to a value lower than the one set for TR.

ADJUSTMENTS

⚠	***ATTENTION: before starting the burner up, be sure that the manual cutoff valves are open and check that the pressure upstream the gas train complies the value quoted on paragraph "Technical specifications". Be sure that the mains switch is closed.***
	ATTENTION: During commissioning operations, do not let the burner operate with insufficient air flow (danger of formation of carbon monoxide); if this should happen, make the fuel decrease slowly until the normal combustion values are achieved.
	WARNING: NEVER LOOSE THE SEALED SCREWS! OTHERWISE, THE DEVICE WARRANTY WILL BE INVALIDATE!
	Prior to start up the burner, make sure that the return pipe to the tank is not obstructed. Any obstruction would cause the pump seal to break.

⚠	**IMPORTANT! the combustion air excess must be adjusted according to the in the following chart:**

Recommended combustion parameters		
Fuel	**Recommended (%) CO2**	**Recommended (%) O2**
Heavy oil	11 ÷ 12	4.2 ÷ 6.2

Adjustments - brief description

Adjust the air and gas flow rates at the maximum output ("high flame") first, by means of the air damper and the adjusting cam respectively.

- Check that the combustion parameters are in the suggested limits.
- Check the flow rate measuring it on the counter.
- Then, adjust the combustion values corresponding to the points between maximum and minimum: set the shape of the adjusting cam foil. The adjusting cam sets the air/fuel ratio in those points.
- Set, now, the low flame output, acting on the low flame microswitch of the actuator in order to avoid the low flame output increasing too much or that the flues temperature gets too low to cause condensation in the chimney.

Adjusting light oil flow rate

The light oil flow rate can be adjusted choosing a nozzle that suits the boiler/utilisation output and setting the delivery and return pressure values according to the ones quoted on the following charts.

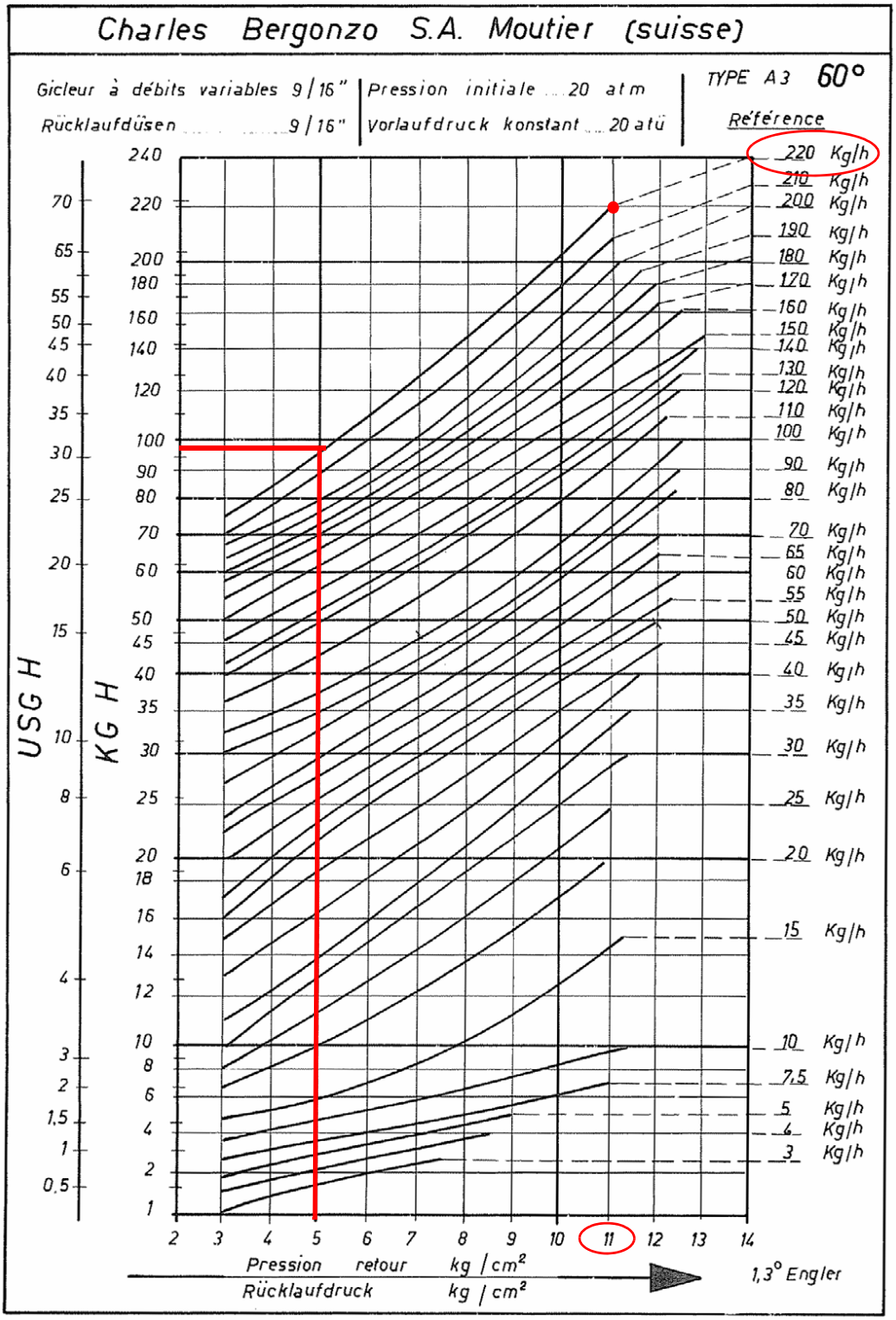

NOZZLE SUPPLY PRESSURE = 20 bar

Example (Bergonzo): if a 220kg/h flow rate BERGONZO nozzle is provided, set the return pressure at 11bar, supply at 20bar on the delivery to get a 220kg/h flow rate. If the return pressure needed is 5bar, instead, act on the **V** adjusting screw on the pressure governor. The flow rate will then be about 95kg/h (see the example showed on the Bergonzo diagram).

FLUIDICS NOZZLE: REFERENCE DIAGRAM (INDICATIVE ONLY)

DIMENSIONS	FLOW RATE kg/h		Indicative pessure on return (bar)
	Min	Max	
40	13	40	19
50	16	50	22
60	20	60	20
70	23	70	23
80	26	80	23
90	30	90	22
100	33	100	22
115	38	115	21
130	43	130	22
145	48	145	21
160	53	160	21
180	59	180	22
200	66	200	21
225	74	225	22
250	82	250	22
275	91	275	22
300	99	300	23
330	109	330	23
360	119	360	22
400	132	400	22
450	148	450	22
500	165	500	22
550	181	550	22
600	198	600	23
650	214	650	23
700	231	700	23
750	250	750	23
800	267	800	22

Tab. 3

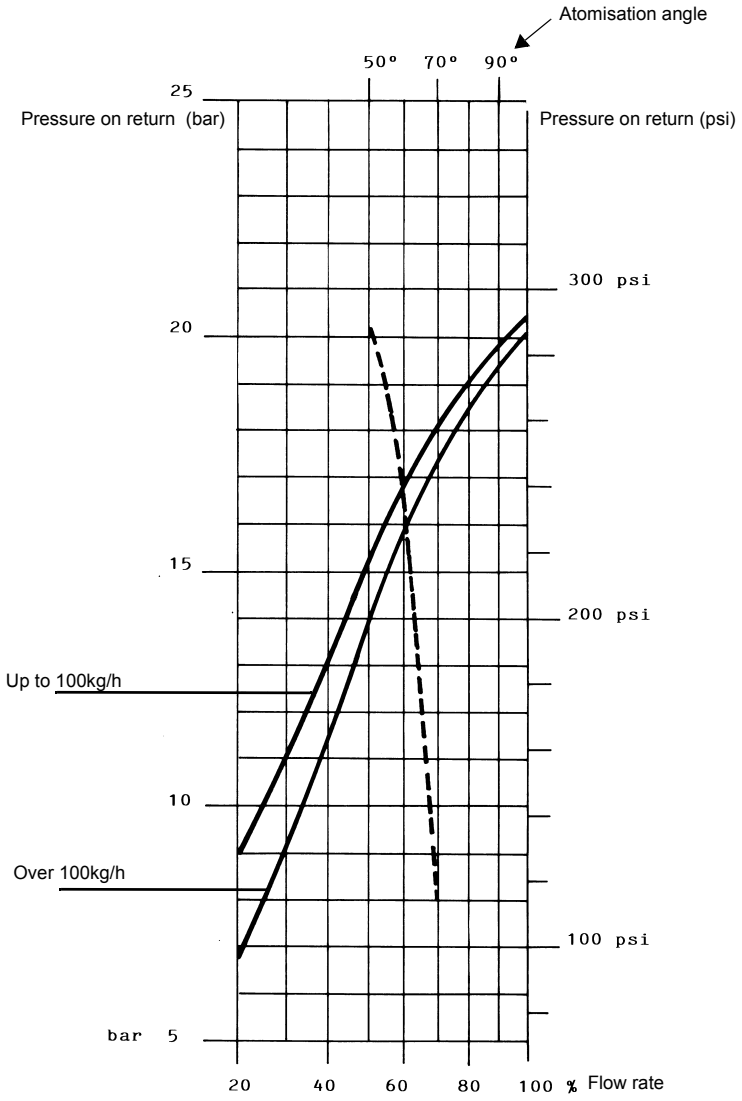

NOZZLE SUPPLY PRESSURE = 25 bar

- - - - - Atomisation angle according to the return pressure

——— % Flow rate

viscosity at nozzle = 5 cSt

ATTENTION! To achieve the maximum flow rate close completely the return line.

Adjusting the combustion head

PN60 - PN70

The burner is factory-set with the head in its MAX position (maximum output). To let the burner operate at a lower output, turn clockwise the VRT screw and move progressively the combustion head back towards the MIN position. Attention! if it is necessary to change the head position, repeat the air and gas adjustments described above.

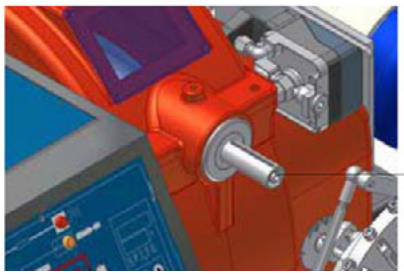

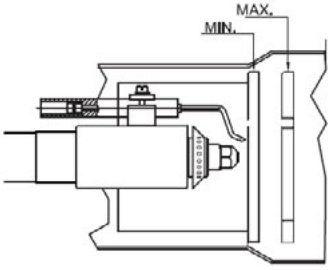

PN81

If necessary, change the combusiton head position: to let the burner operate at a lower output, loose the VB screw and move progressively back the combustion head towards the MIN position, by turning clockwise the VRT ring nut. Fasten VB screw when the adjustment is accomplished.

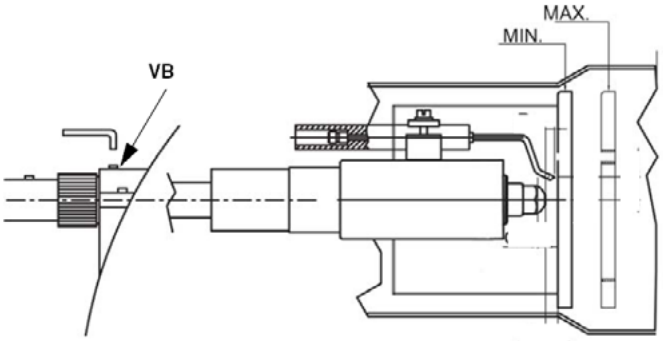

Oil Flow Rate Settings by means of Berger STM30../Siemens SQM40.. actuator

Berger STM30 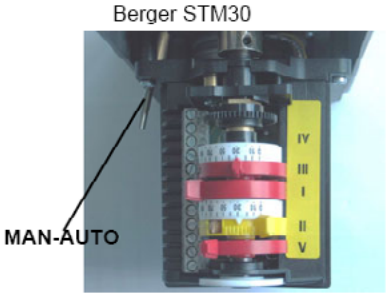 	Siemens SQM40 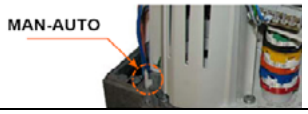 	Actuator cams I High flame II Stand-by and Ignition III Low flame

1. With the electrical panel open, prime the oil pump acting on the related CV contactor (see next picture): check the pump motor rotation (see “Fan-pump motor direction” on page 24) and keep pressing for some seconds until the oil circuit is charged.

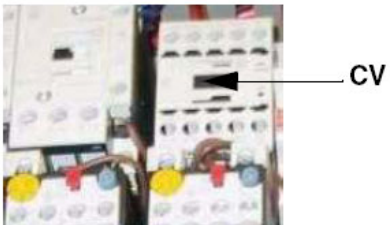

2. bleed the air from the M pressure gauge port (Fig. 12), by loosing the cap without removing it, then release the contactor.

Suntec E	Suntec TA
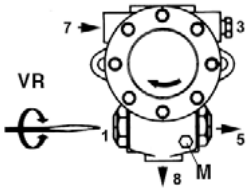 	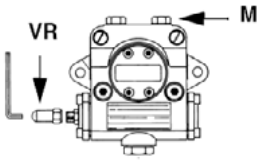

Fig. 12

3. Before starting the burner up, drive the high flame actuator microswitch matching the low flame one (in order to let the burner operates at the lowest output) make the burner operate at the low flame stage
4. Turn the burner on by means of its main switch A (see next picture): if the burner locks (LED B on in the control panel) press the RESET button (C) on the control panel - see chapter “OPERATION”

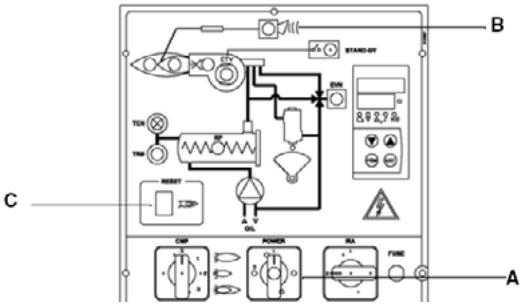

5. Start the burner up by means of the thermostat series and wait unitl the pre-purge phase comes to end and that burner starts up;
6. drive the burner to high flame stage, by means fo the thermostat TAB, (as far as fully-modulating burners, see the related paragraph).
7. Then move progressively the microswitch to higher values until it reaches the high flame position; always check the combustion values (see next steps).

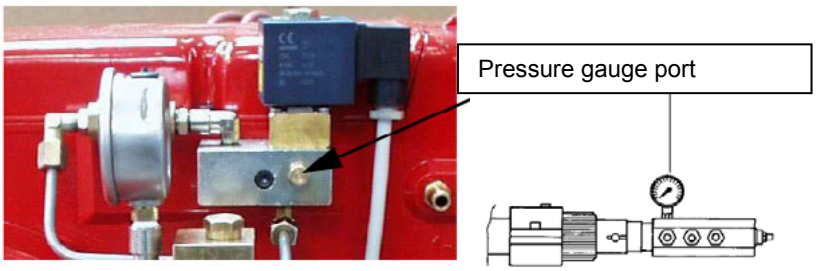

PN60-70 PN81

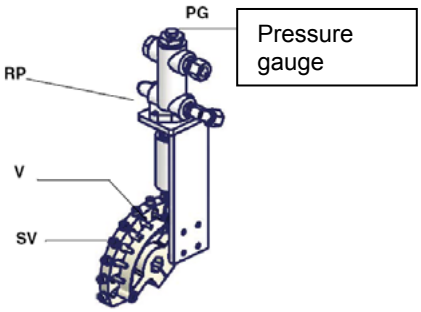

8. the nozzle supply pressure is already factory-set and must not be changed. Only if necessary, adjust the supply pressure as follows: insert a pressure gauge into the port shown on picture above and act on on the pump adjusting screw VR (see Fig. 12 and page. 11) as to get the nozzle pressure at 20bar or 25bar (nozzles Bergonzo or Fluidics/UNIGAS M3 - see table/diagram on pages 27-28);
9. in order to get the maximum oil flow rate, adjust the pressure (reading its value on the PG pressure gauge): checking always the combustion parameters, the adjustment is to be performed by means of the SV adjusting cam screw V (see picture) when the cam has reached the high flame position.
10. To adjust the air flow rate in the high flame stage, loose the RA nut and screw VRA as to get the desired air flow rate: moving the rod TR towards the air damper shaft, the air damper opens and consequently the air flow rate increases, moving it far from the shaft the air damper closes and the air flow rate decreases.

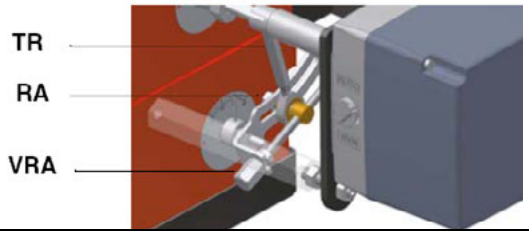

⚠	**Note: once the procedure is perfomed, be sure that the blocking nut RA is fasten. Do not change the position of the air damper rods.**

11. as for the point-to-point regulation in order to set the cam foil shape, move the low flame microswitch (cam III) a little lower than the maximum position (90°);
12. set the TAB thermostat to the minimum in order that the actuator moves progressively towards the low flame position, (as far as fully-modulating burners, see the related paragraph);
13. move cam III towards the minimum to make the actuator move towards the low flame until the two bearings find the adjusting screw that refers to a lower position: screw V to increase the rate, unscrew to decrease, in order to get the pressure as shown on diagram on pages27/28, according to the requested rate.
14. Move again cam III towards the minimum to meet the next screw on the adjusting cam and repeat the previous step; go on this way as to reach the desired low flame point.
15. The low flame position must never match the ignition position that is why cam III must be set 20°- 30° more than the ignition position.
16. Turn the burner off; then start it up again. If the adjustment is not correct, repeat the previous steps.

Adjustment by the Siemens SQL33.. actuator

1. with the electrical panel open, prime the oil pump acting directly on the related CV contactor (see next picture): check the pump motor rotation (see “Fan-pump motor direction” on page 10) and keep pressed for some seconds until the oil circuit is charged.

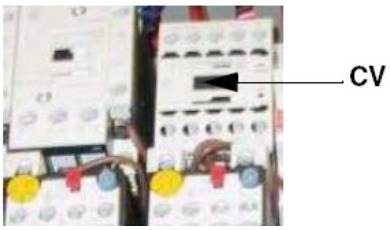

2. bleed the air from the M pressure gauge port (Fig. 13) by loosing the cap without removing it, then release the contactor.

Suntec E	Suntec TA
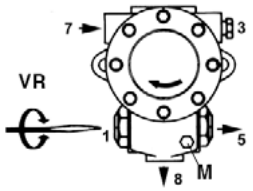	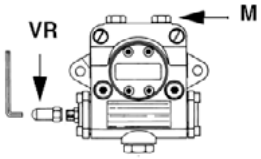

Fig. 13

3. Before starting the burner up, drive the high flame actuator microswitch matching the low flame one (in order to let the burner operates at the lowest output) to safely achieve the high flame stage).
4. Turn the burner on by means of its main switch A (see next picture): if the burner locks (LED B on in the control panel) press the RESET button (C) - see chapter “OPERATION”.

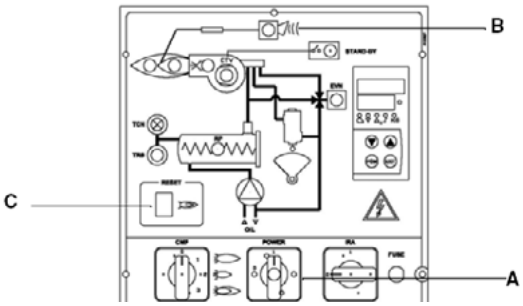

5. Start the burner up by means of the thermostat series and wait until the pre-purge phase comes to end and that burner starts up;
6. the burner starts up with the actuator on the ignition position, set it to the MAN (manual mode), by the MAN/AUTO selector (ignition position= read on the air damper index).
7. disconnect the TAB thermostat removing the wire from the terminal no. 6 or by setting MAN on the RWF40 modulator or by setting 0 by means of the CMF switch (only for fully-modulating burners);
8. set the actuator to the manual mode (MAN) by means of the MAN/AUTO switch (see next pictures).

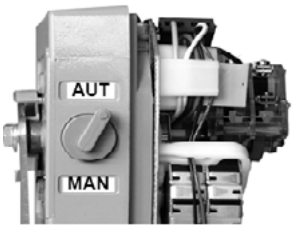	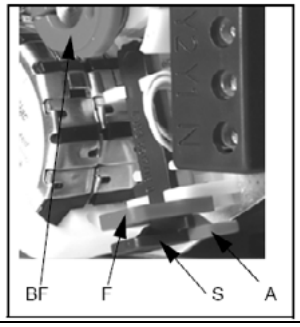	Descrizione camme del servocomando SQL33.. A = red cam locking lever for “high flame” S = green cam locking lever for “stand-by and ignition” BF = Low flame F = plastic cam

9. the nozzle supply pressure is already factory-set and must not be changed. Only if necessary, adjust the supply pressure as follows: insert a pressure gauge into the port shown on picture above and act on on the pump adjusting screw VR (see Fig. 12 and page. 11) as to get the nozzle pressure at 20bar or 25bar (nozzles Bergonzo or Fluidics/UNIGAS M3 - see table/diagram on pages 27-28);

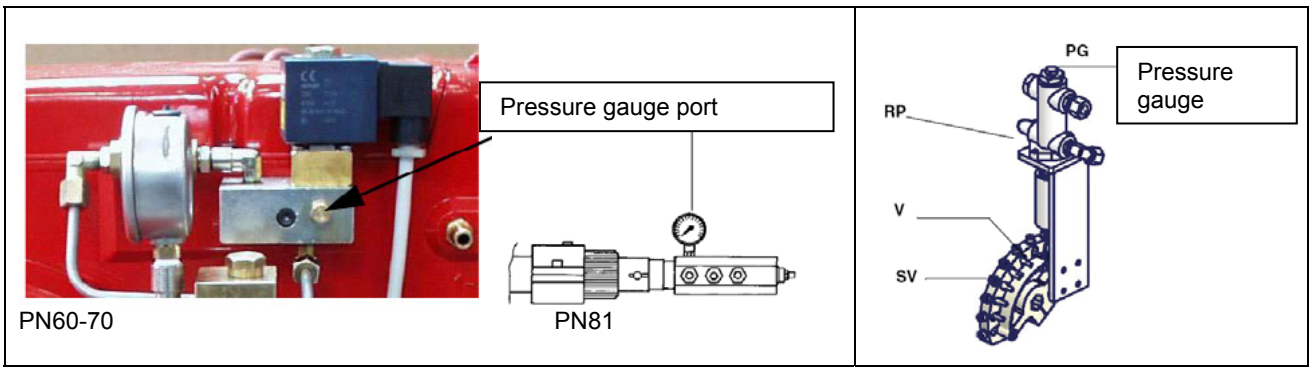

10. in order to get the maximum oil flow rate, adjust the pressure (reading its value on the PG pressure gauge): always checking the combustion parameters, the adjustment is to be performed by means of the SV adjusting cam screw V (see picture) when the cam has reached the high flame position.
11. To adjust the air flow rate in the high flame stage, loose the RA nut and screw VRA as to get the desired air flow rate: moving the rod TR towards the air damper shaft, the air damper opens and consequently the air flow rate increases, moving it far from the shaft the air damper closes and the air flow rate decreases

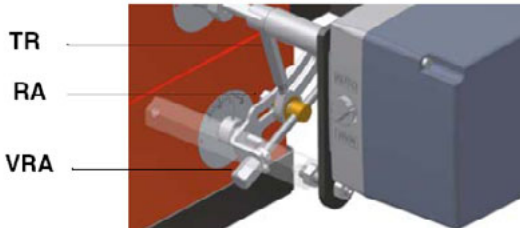

⚠	**Note: once the procedure is perfomed, be sure that the blocking nut RA is fasten. Do not change the position of the air damper rods.**

12. once the air and oil flow rate have been adjusted at the maximum output, go on with the point to point adjustment on the SV adjusting cam as to reach the minimum output point: gradually move the adjusting cam in order to adjust each of the V screws as to describe the cam foil shape.
13. to change the SV position set the actuator on the manual mode (MAN), turn the adjusting cam SV and set again the actuator to the AUTO mode to lock the adjusting cam;
14. act on the V screw that mathces the bearings referring to the adjusting cam position;
15. o adjust the next screw, set again the actuator mode to MAN, turn the adjusting cam and set the actuator to AUTO mode to lock the adjusting cam on the next screw; adjust it and go on this way to adjust all the screws in order to set the cam foil shape, according to the combustion values read.
16. Once the cam foil shape is defined, reconnect the TAB thermostat by reconnecting the wire to the terminal no.6 or setting the RWF40 burner modulator to AUTO or the CMF switch to 3 (only for fully-modulating burner)).
17. Turn the burner off then start it up again..
18. Once the pre-purge time comes to end and the burner is on, drive the burner to the high flame stage by the TAB thermostat: check the combustion values;

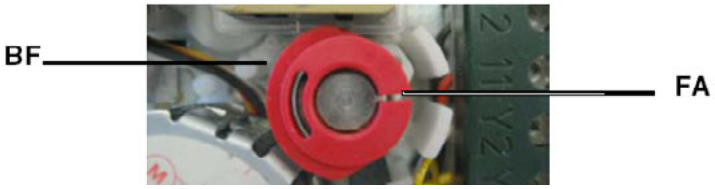

19. drive the burner to low flame, if necessary adjust the low flame size (output) by inserting a screwdriver on the slot F to move the BF cam.
20. Turn the burner off; then start it up again. If the adjustment is not correct, repeat the previous steps.

Per i bruciatori modulanti, consultare il paragrafo “Bruciatori modulanti”.

Fully-modulating burners

To adjust the fully-modulating burners, use the CMF switch on the burner control panel (see next picture), instead of the TAB thermostat as described on the previous paragraphs about the progressive burners. Go on adjusting the burner as described before, paying attention to use the CMF switch intead of TAB.
The CMF position sets the oprating stages: to drive the burner to the high-flame stage, set CMF=1; to drive it to the low-flame stage, set CMF=2.
To move the adjusting cam set CMF=1 or 2 and then CMF=0.

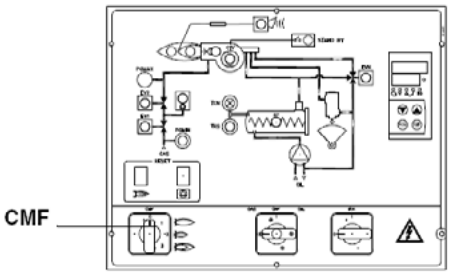	CMF = stop at the current position CMF = 1 high flame operation CMF = 2 low flame operation CMF = 3 automatic operation

Calibration of air pressure switch (if provided)

To calibrate the air pressure switch, proceed as follows:

1. Remove the transparent plastic cap.
2. Once air and gas setting have been accomplished, startup the burner.
3. During the pre-purge phase o the operation, turn slowly the adjusting ring nut VR in the clockwise direction until the burner lockout, then read the value on the pressure switch scale and set it to a value reduced by 15%.
4. Repeat the ignition cycle of the burner and check it runs properly.
5. Refit the transparent plastic cover on the pressure switch.

Oil circuit (PN81)

The fuel is pushed into the pump 1 to the nozzle 3 at the delivery pressure set by the pressure governor. The solenoid valve 2 stops the fuel immission into the combustion chamber. The fuel flow rate that is not burnt goes back to the tank through the return circuit. The spill-back nozzle is feeded at constant pressure, while the return line pressure is adjusted by means of the pressure governor controlled by an actuator coupled to an adjusting cam. The fuel amount to be burnt is adjusted by means of the burner actuator according to the adjustments set (see previous paragraph).

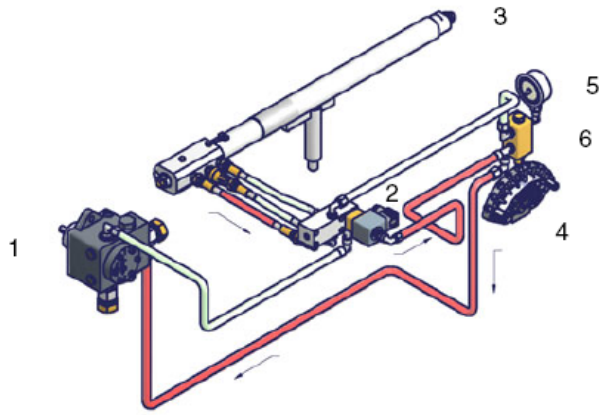	Stand-by
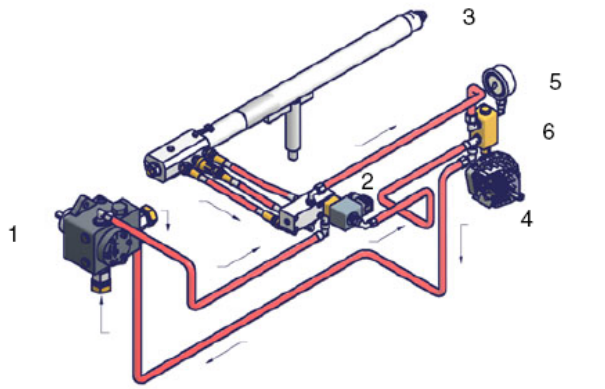	Prepurge
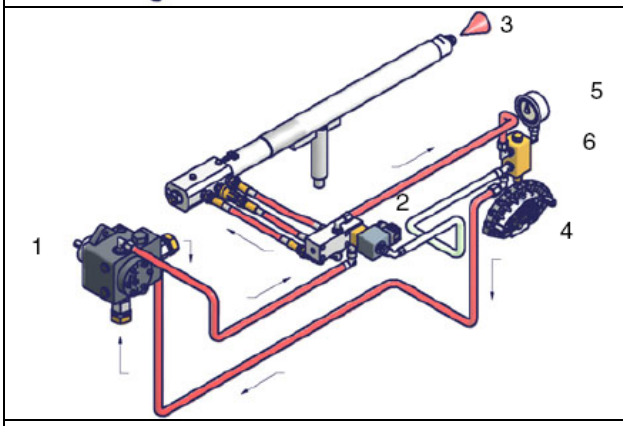	Low flame
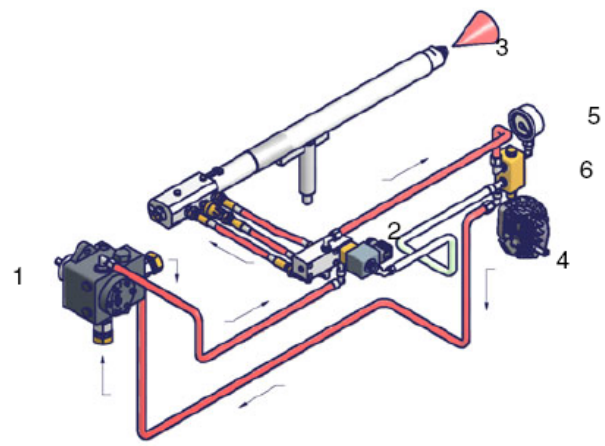	High flame *Keys* 1. Oil pump 2. Oil solenoid valve 3. Nozzle 4. Adjusting cam 5. Pressure gauge 6. Pressure governor

PART II: OPERATION

LIMITATIONS OF USE

THE BURNER IS AN APPLIANCE DESIGNED AND CONSTRUCTED TO OPERATE ONLY AFTER BEING CORRECTLY CONNECTED TO A HEAT GENERATOR (E.G. BOILER, HOT AIR GENERATOR, FURNACE, ETC.), ANY OTHER USE IS TO BE CONSIDERED IMPROPER AND THEREFORE DANGEROUS.

THE USER MUST GUARANTEE THE CORRECT FITTING OF THE APPLIANCE, ENTRUSTING THE INSTALLATION OF IT TO QUALIFIED PERSONNEL AND HAVING THE FIRST COMMISSIONING OF IT CARRIED OUT BY A SERVICE CENTRE AUTHORISED BY THE COMPANY MANUFACTURING THE BURNER.

A FUNDAMENTAL FACTOR IN THIS RESPECT IS THE ELECTRICAL CONNECTION TO THE GENERATOR'S CONTROL AND SAFETY UNITS (CONTROL THERMOSTAT, SAFETY, ETC.) WHICH GUARANTEES CORRECT AND SAFE FUNCTIONING OF THE BURNER.

THEREFORE, ANY OPERATION OF THE APPLIANCE MUST BE PREVENTED WHICH DEPARTS FROM THE INSTALLATION OPERATIONS OR WHICH HAPPENS AFTER TOTAL OR PARTIAL TAMPERING WITH THESE (E.G. DISCONNECTION, EVEN PARTIAL, OF THE ELECTRICAL LEADS, OPENING THE GENERATOR DOOR, DISMANTLING OF PART OF THE BURNER).

NEVER OPEN OR DISMANTLE ANY COMPONENT OF THE MACHINE.

OPERATE ONLY THE MAIN SWITCH, WHICH THROUGH ITS EASY ACCESSIBILITY AND RAPIDITY OF OPERATION ALSO FUNCTIONS AS AN EMERGENCY SWITCH, AND ON THE RESET BUTTON.

IN CASE OF A BURNER SHUT-DOWN, RESET THE CONTROL BOX BY MEANS OF THE RESET PUSHBUTTON. IF A SECOND SHUT-DOWN TAKES PLACE, CALL THE TECHNICAL SERVICE, WITHOUT TRYING TO RESET FURTHER.

WARNING: DURING NORMAL OPERATION THE PARTS OF THE BURNER NEAREST TO THE GENERATOR (COUPLING FLANGE) CAN BECOME VERY HOT, AVOID TOUCHING THEM SO AS NOT TO GET BURNT.

FUNZIONAMENTO

⚠	**BEFORE STARTING UP THE BURNER, BE SURE THAT THE MAIN SWITCH IS ON AND THE MANUAL SHUTOFF VALVES ARE OPEN. BE SURE THAT THE MAINS SWITCH IS CLOSED. READ "WARNINGS" CHAPTER CAREFULLY.** BE SURE THE CUTOFF VALVES ON THE DELIVERY AND RETURN PIPES ARE OPEN.

Turn the burner on by means of its main switch A (see next pictures).

- Check that the burner is not locked (LED E lights up); if so, reset it by pressing the reset button N.
- Check that the series of thermostats (or pressure switches) enable the burner to start up.
- At the beginning of the start-up cycle the air damper moves to the maximum opening, the fan motor starts and the pre-purge phase begins. During the pre-purge phase the complete opening of the air damper is signalled by LED F on the front panel.
- At the end of the pre-purge the air damper is brought to the ignition position and the ignition transformer is energised (signalled by LED C on the panel). Few seconds later, the oil valve opens and the ignition transformer is de-energized (LED C off).
- The burner is now operating and after some seconds the burner is automatically driven into high flame (LED A on), or remains in low flame (LED B on) according to the plant needs.

As far as fully-modulating burners, see the burner modulator manual.

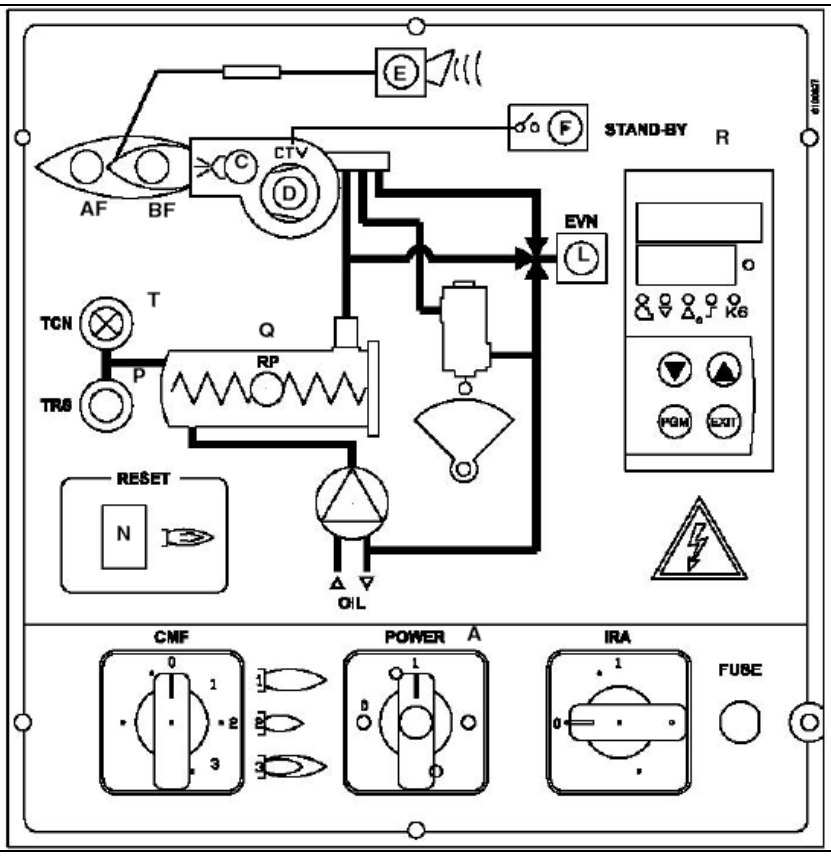

KP73A

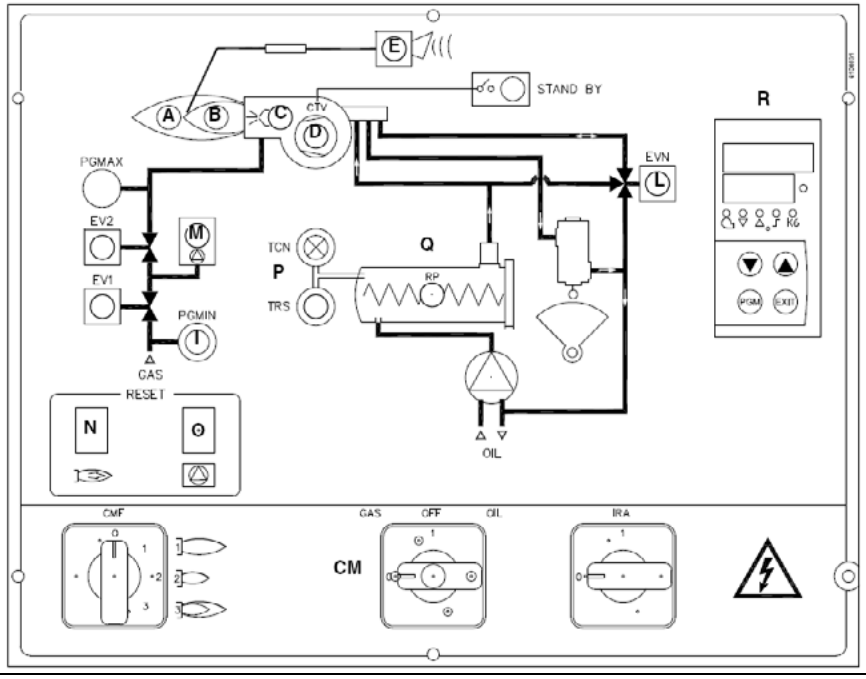

Key

A Burner main switch
AF High flame lamp
BF Low flame lamp
C Ignition transformer operation
CMF Manual operation switch: 0= Off
1= High flame - 2= Low flame - 3= Automatic
D Fan motor overload tripped intervention
E Burner lockout
F Burner in stand-by
IRA Auxiliaries heaters switch
L Heavy oil solenoid lamp operation
N Flame controller reset pushbutton
P Heating resistors safety thermostat
Q Pre-heating tank
R Modulator

PART III: MAINTENANCE

At least once a year carry out the maintenance operations listed below. In the case of seasonal servicing, it is recommended to carry out the maintenance at the end of each heating season; in the case of continuous operation the maintenance is carried out every 6 months.

⚠	WARNING: ALL OPERATIONS ON THE BURNER MUST BE CARRIED OUT WITH THE MAINS DISCONNECTED AND THE FUEL MANAUL CUTOFF VALVES CLOSED!
	ATTENTION: READ CAREFULLY THE “WARNINGS” CHAPTER AT THE BEGINNIG OF THIS MANUAL.

ROUTINE MAINTENANCE

1. Clean and examine the oil filter cartridge and replace it if necessary.
2. Examine the condition of the oil flexible tubing and check for possible leaks.
3. Check and clean if necessary the oil heaters and the tank, according to the fuel type and its use; remove the heaters flange fixing nuts and remove the heaters from the tank: clean by using steam or solvents and not metallic things.
4. Clean and examine the filter inside the oil pump. Filter must be thoroughly cleaned at least once in a season to ensure correct working of the fuel unit. To remove the filter, unscrew the four screws on the cover. When reassemble, make sure that the filter is mounted with the feet toward the pump body. If the gasket between cover and pump housing should be damaged, it must be replaced. An external filter should always be installed in the suction line upstream of the fuel unit.
5. Remove and clean the combustion head (page 35).
6. Examine and clean the ignition electrodes, adjust and replace if necessary (see page 36).
7. Examine and clean the detection probe, adjust and replace if necessary (see page 37).
8. Examine the detection current (see page 37).
9. Remove and clean (page 36) the heavy oil nozzle (Important: use solvents for cleaning, not metallic tools) and at the end of the maintenance procedures, after replacing the burner, turn it on and check the shape of the flame; if in doubt replace the nozzle. Where the burner is used intensively it is recommended to replace the nozzle as a preventive measure, at the begin of the operating season.
10. Clean and grease joints and rotating parts.

IMPORTANT:Remove the combustion head before checking the ignition electrodes..

⚠	CAUTION: avoid the contact of steam, solvent and other liquids with the electric terminals of the resistor. On flanged heaters, replace the seal gasket before refitting it. Periodic inspections must be carried out to determine the frequency of cleaning.

Self-cleaning filter

Fitted only on high viscosity oil burners for oil with viscosity > 110 cSt (15 °E) a 50 °C. Periodically turn the knob to clean the filter.	

Removing the combustion head (PN60-PN70)

1. Remove cover C;
2. remove the photoresistor from its housing;
3. unscrew the rotating couplings on the two oil hoses (use two spanners to avoid loosening the couplings fixed to the distributor block);
4. remove the complete assembly L as shown in the figure.

Note: to replace, follow the above operations in reverse order.

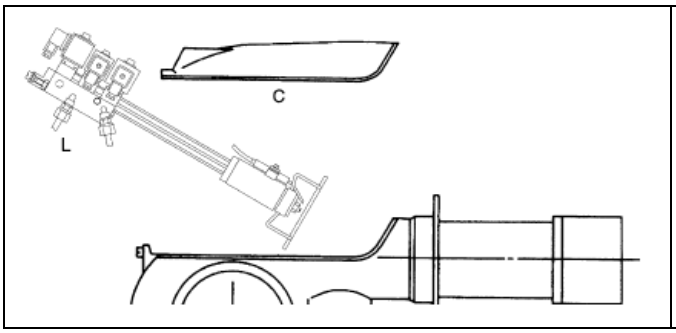

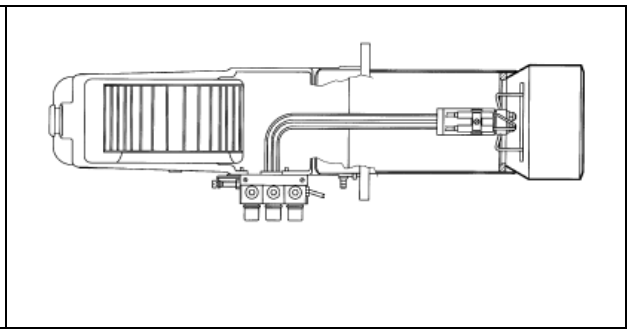

Removing the combustion head (PN81)

1. Remove the cover H.
2. Slide the photoresistor out of its housing.
3. Unscrew the oil connections E (picture below) connecting the flexible pipes to the gun L and remove the whole assembly as shown on picture below.
4. Clean the combustion head.

Note: to replace, follow the above operations in reverse order.

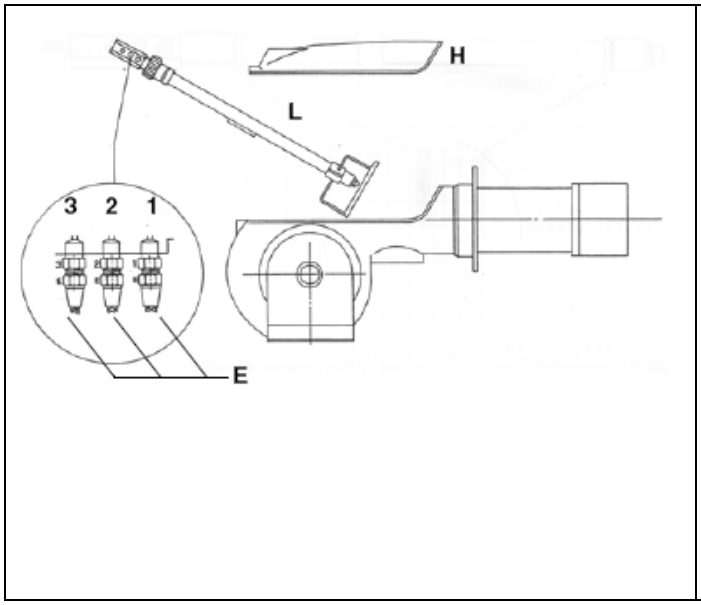

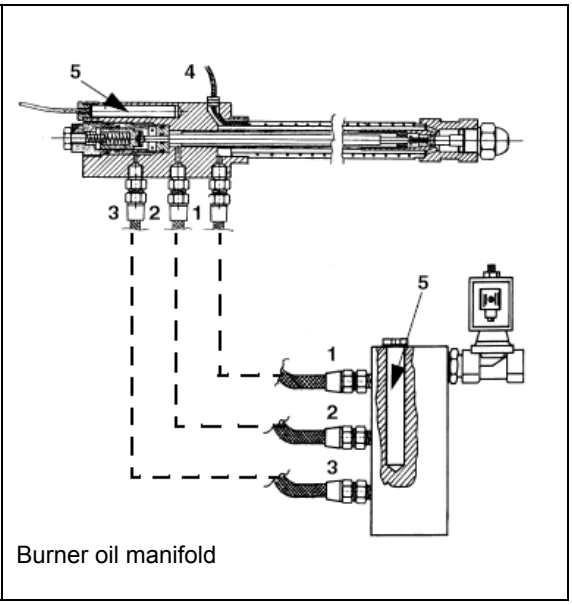

Burner oil manifold

Key

1 Inlet
2 Return
3 Gun opening
4 Heating wire (only on high density oil burners)
5 Cartdrige-type heater
H Cover
L Oil gun
E Oil piping connections

Removing the oil gun, replacing the nozzle and the electrodes

⚠	ATTENTION: avoid the electrodes to get in touch with metallic parts (blast tube, head, etc.), otherwise the boiler operation would be compromised. Check the electrodes position after any intervention on the combustion head.

To remove the oil gun, proceed as follows:

- remove the combustion head as described on the prevoius paragraph;

- remove the oil gun and the electrodes: check the oil gun, replace it fi necessary;
- after removing the oil gun, unscrew the nozzle and replace it if necessary;
- in order to replace the electrodes, unscrew the fixing screws and remove them: place the new electrodes being careful to observe the measures shown on next paragraph and reassemble following the reversed procedure.

Adjusting the electrodes and nozzle position

To position the nozzle, slacken the screw VB and move the combustion head. Check the ignition electrodes at the end of settings. Measures are in mm.

PN60-PN70

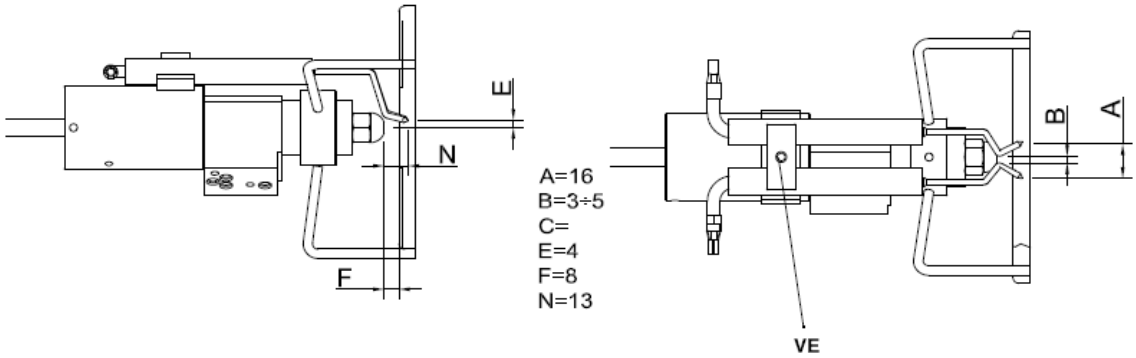

PN81

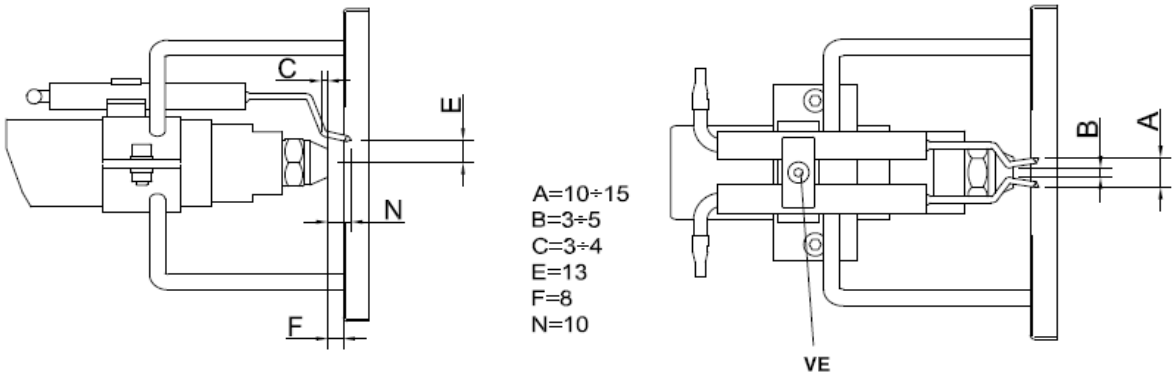

Cleaning and replacing the detection photoresistor

To clean/replace the photoresistive detector, remove it from its slot. To clean the photoresistor, use a clean cloth, not cleaning sprays.

Checking the detection current

To check the flame itensity signal, follow the diagram shown on the next picture. If the measured value is lower than the suggested one, check the photoresistor position, the electrical contacts. Replace the photoresistor if necessary.

PN60: LOA24/LMO24

PN70-PN81: LMO44

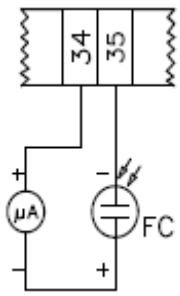

Minimum current intensity with flame: 70 μA (LOA24) - 45 μA(LMO24-44)
Maximum current intensity without flame: 5.5 μA (LOA24/LMO24-44)
Maximum possible current intensit with flame: 210 μA (LOA24) - 100 μA (LMO24-44)

Seasonal stop

To stop the burner in the seasonal stop, proceed as follows:
- turn the burner main switch to 0 (Off position)
- disconnect the power mains
- close the fuel valve of the supply line

Burner disposal

In case of disposal, follow the instructions according to the laws in force in your country about the “Disposal of materials”.

TROUBLESHOOTING

CAUSES/TROUBLES	DOES NOT START UP	CONTINUES PRE-PURGUE	BURNER STARTS UP WITH COLD OIL	DOES NOT IGNITE AND GOES TO SHUT DOWN	DOES NOT PASS TO HIGH FLAME	GOES TO SHUT DOWN DURING OPERATION	GOES OFF AND REPEATS THE CYCLE DURING OPERATION
MAIN SWITCH OFF	●						
LINE FUSES BLOWN	●						
MAXIMUM THERMOSTAT MALFUNCTION	●						
FAN THERMAL CUTOUT TRIPPED	●						
AUXILIARY FUSE BLOWN	●						
OIL RESISTOR FAULTY	●		●				
OIL ENABLING THERMOSTAT TRIPPED	●		●				
CONTROL UNIT MALFUNCTION	●	●		●	●	●	●
AIR SERVOCONTROL MALFUNCTION					●		
CIRCUIT ENABLING THERMOSTAT		●			●		
SMOKY FLAME						●	●
IGNITION TRANSFORMER FAULTY				●			
IGNITION ELECTRODES WRONGLY POSITIONED				●			
DIRTY NOZZLE				●		●	
FAULTY OIL VALVE				●			●
FAULTY OR DIRTY PHOTORESISTOR							●
FAULTY RESISTOR THERMOSTAT	●						
FAULTY HIGH-LOW FLAME THERMOSTAT					●		
ACTUATOR CAM NOT CALIBRATED					●		
LOW OIL PRESSURE				●		●	●
DIRTY OIL FILTER				●		●	●
DIRTY IGNITION ELECTRODES				●			

WIRING DIAGRAM

WARNING:
1 - Electrical supply 400V 50Hz 3N a.c.
2 - Do not reverse phase with neutral
3 - Ensure burner is properly earthed

See the attached wiring diagrams.

Wiring diagram 05-558 - Progressive burners - PN60
Wiring diagram 05-618 - Fully-modulating burners - PN60
Wiring diagram 07-345 / 07-516 - Progressive burners - PN70-PN81
Wiring diagram 07-403 - Fully-modulating burners - PN70-PN81

BURNER EXPLODED VIEW– PN60/PN70

POS.	DESCRIZIONE	POS.	DESCRIZIONE		POS.	DESCRIZIONE
1.1	BOARD	4.11	OIL PRE-HEATER		16.5	LONG IGNITION ELECTRODE
1.2.1	FRONT CONTROL PANEL	5.1	PRESSURE GOVERNOR		16.6	LONG IGNITION ELECTRODE
1.2.2	LIGHT	5.2	BRACKET		16.7	NOZZLE
1.2.3	LIGHT	6.1	AIR INTAKE		16.8	O RING
1.2.4	LOCK-OUT RESET BUTTON	6.2.1	ACTUATOR		16.9	
1.2.5	PROTECTION	6.2.2	CONNECTOR		16.10	
1.2.6	SWITCH	6.3.1	SCREW		16.11	
1.2.7	FUSE	6.4	AIR INTAKE DAMPER		17.1	OIL MANIFOLD
1.3	COVER	6.5	LOUVER SHAFT		17.2	SOLENOID VALVE
1.4	LOCK-OUT RESET BUTTON	6.6	ADJUSTING CAM SHAFT		18	SPACER
2.1	PUMP	6.7	ADJUSTING CAM		19	OIL MANIFOLD
2.9		7	AIR INLET CONE		20.1	
2.10		8	GENERATOR GASKET		20.2	IGNITION TRANSFORMER
2.11	SCREW	9	CLOSING PLATE		20.3	CONTROL BOX
2.12	UNION ELBOW	10	INSPECTION GLASS		20.4	CONTROL BOX SOCKET
2.13		11	PHOTORESISTOR		20.5	BRACKET
3.1	FAN WHEEL	12.1	PIN		20.6.1	BRACKET
3.2	MOTOR	12.2	ELASTIC RING		20.6.2	THERMOSTAT
4.1	OIL FILTER	12.3	HALF-COUPLING		20.6.3	THERMOSTAT
4.2	GASKET	12.4	HALF-COUPLING		21	STANDARD BLAST TUBE
4.3	GAS BLEEDING VALVE	12.5	HALF-COUPLING			
4.4	COVER	13	BURNER HOUSING			
4.5	O RING	14	HEAD ADJUSTING SCREW			
4.6	THERMOMETER	15	BRACKET			
4.7	MUFF	16.1	NOZZLE HOLDER			
4.8	SHEATH	16.2				
4.9	SHEATH	16.3				
4.10	RESISTOR	16.4	IGNITION CABLE			

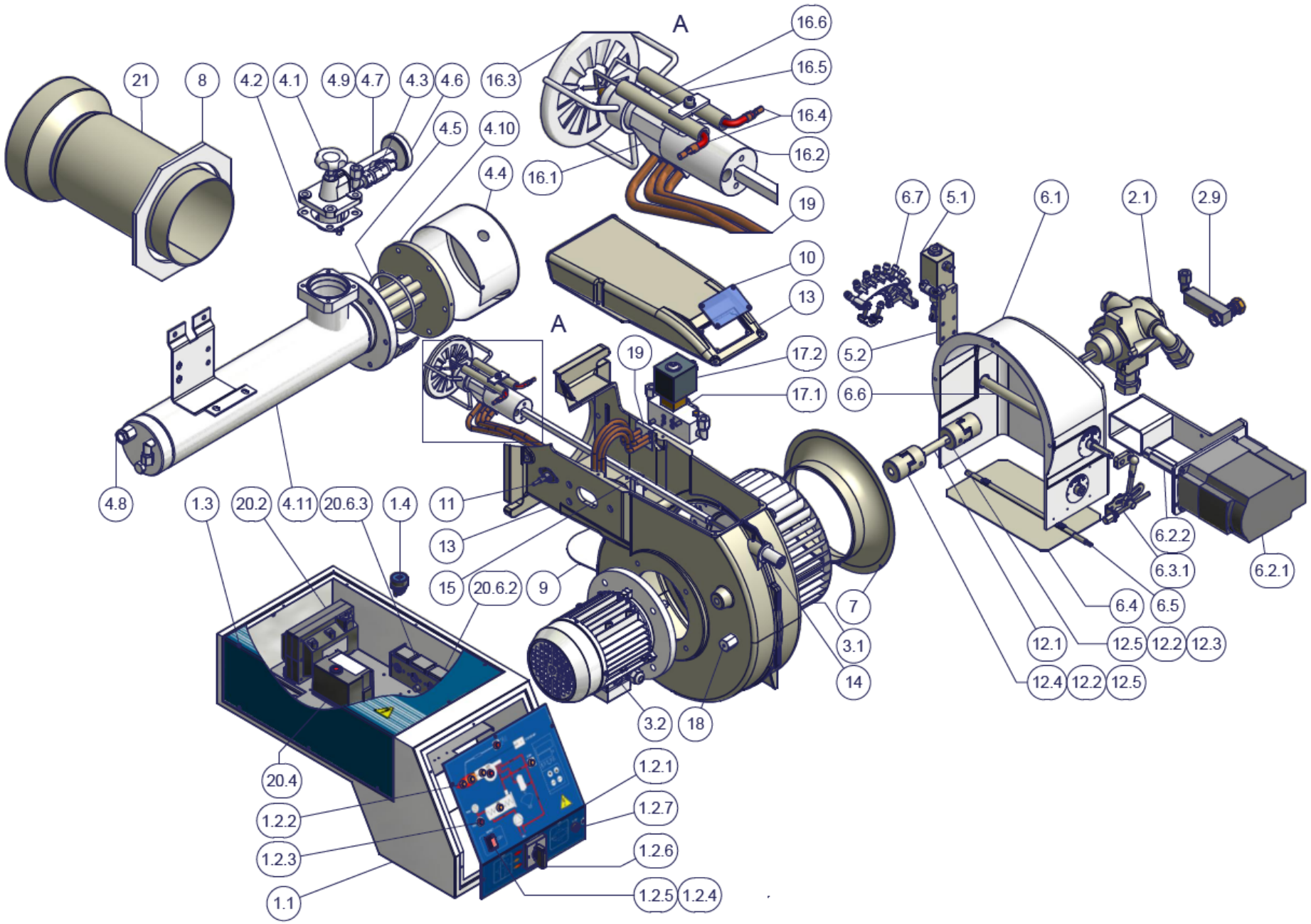
A
A
21
8
4.2
4.1
4.9
4.7
4.3
4.6
16.3
16.6
16.5
16.4
16.2
4.5
4.10
4.4
16.1
19
10
13
17.2
17.1
19
6.7
5.1
6.1
2.1
2.9
5.2
6.6
4.8
1.3
20.2
4.11
20.6.3
1.4
11
13
15
20.6.2
9
7
3.1
14
3.2
18
6.2.2
6.3.1
6.2.1
6.4
6.5
12.1
12.5
12.2
12.3
12.4
12.2
12.5
20.4
1.2.1
1.2.2
1.2.7
1.2.3
1.2.6
1.1
1.2.5
1.2.4

BURNER EXPLODED VIEW – PN81

POS.	DESCRIPTION
1	BLAST TUBE
2.1	SOLENOID VALVE
2.2	OIL DISTRIBUTOR
3.1	CONTROL PANEL
3.2	CONTROL PANEL COVER
4.1.1	COMBUSTION HEAD
4.1.2	IGNITION ELECTRODE
4.1.3	IGNITION ELECTRODE
4.1.4	PLATE
4.1.5	IGNITION CABLE
4.2.1	GUN DISTRIBUTOR
4.2.2	OIL RESISTOR
4.3	GUN PIPES
4.4	ADJUSTING NUT
4.5	NOZZLE
4.6	NOZZLE HOLDER
4.7	PIPE
5.1	PUMP
5.2	OIL RESISTOR
6.1	FAN WHEEL
6.2	MOTOR
7.1.1	VALVE
7.1.2	THERMOMETER
7.2	COVER
7.3.1	BLACKET
7.3.2	TANK
7.4	RESISTOR
8.1	OIL GOVERNOR

POS.	DESCRIPTION		POS.	DESCRIPTION
8.2	BRACKET		12	BODY
9.1	PIN		12.1	COVER
9.2	RING		12.2	FLANGE
9.3	RING		13	GASKET
9.4	HALF JOINT		14	DISC
9.5	HALF JOINT		15	GLASS
9.6	HALF JOINT		16	PHOTORESISTOR
9.7	HALF JOINT		17	BRACKET
10.1.1	SPACER		18	BRACKET
10.1.2	ACTUATOR		19	OIL RESISTOR
10.1.3	CONNECTOR			
10.1.4	BRACKET			
10.2.1	NUT			
10.2.2	SCREW			
10.2.3	SCREW			
10.2.4	CONNECTING ROD			
10.2.5	ROD			
10.2.6	JOINT			
10.2.7	JOINT			
10.2.8	NUT			
10.3	AIR DAMPER			
10.4	AIR DAMPER			
10.5	AIR INTAKE			
10.6	PIN			
10.7	PIN			
10.8	PIN			
10.9	ADJUSTING CAM			
11				

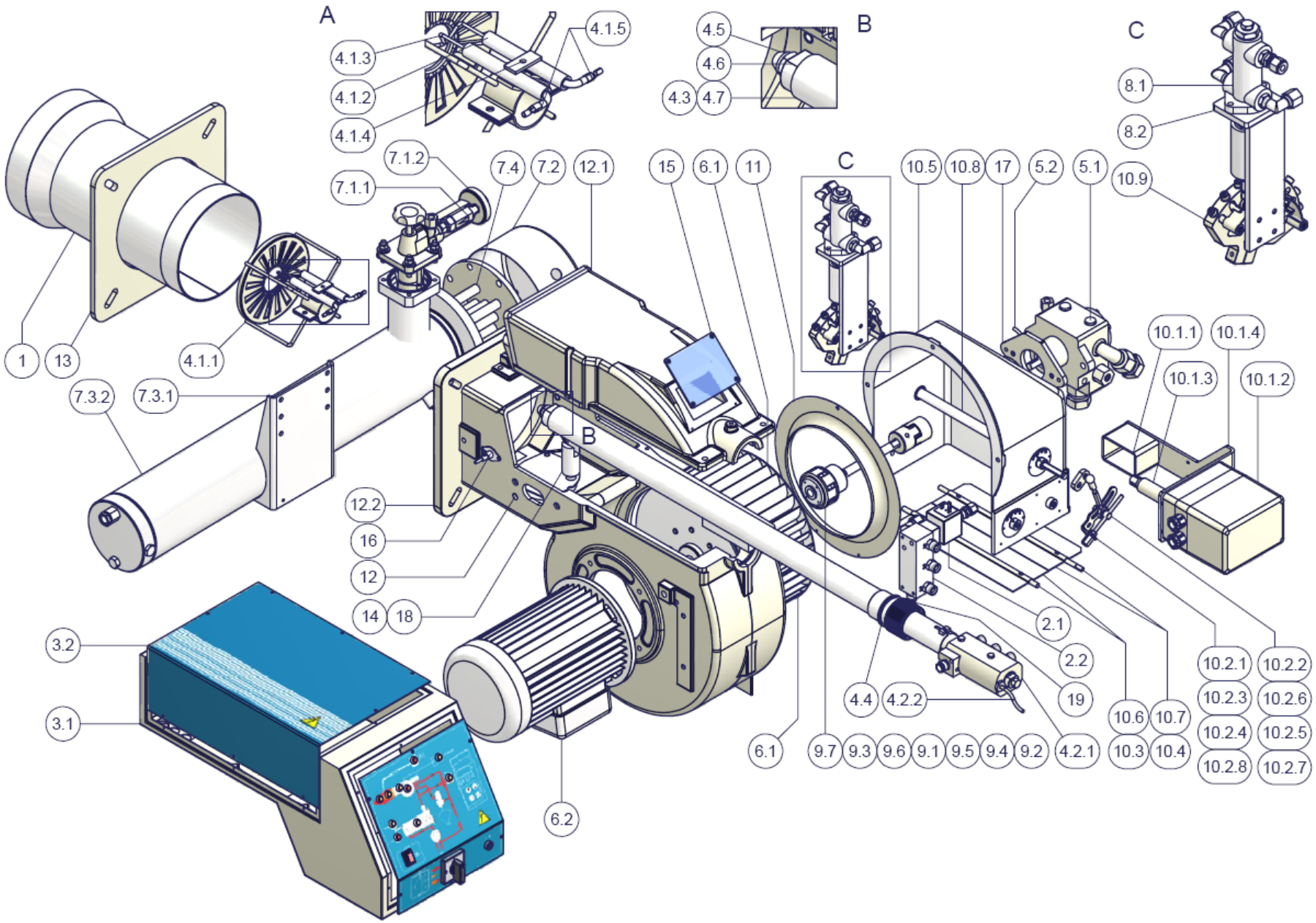
A
4.1.3
4.1.2
4.1.4
4.1.5
B
4.5
4.6
4.3
4.7
C
8.1
8.2
10.9
7.1.2
7.1.1
7.4
7.2
12.1
15
6.1
11
C
10.5
10.8
17
5.2
5.1
1
13
4.1.1
7.3.2
7.3.1
B
10.1.1
10.1.4
10.1.3
10.1.2
12.2
16
12
14
18
2.1
2.2
3.2
3.1
4.4
4.2.2
19
10.6
10.7
10.2.1
10.2.2
10.2.3
10.2.6
10.2.4
10.2.5
10.2.8
10.2.7
6.1
9.7
9.3
9.6
9.1
9.5
9.4
9.2
4.2.1
10.3
10.4
6.2

SIEMENS OIL BURNERS AUTOMATIC CONTROLLER SIEMENS LMO14 - LMO24 - LMO44

The LMO... burner controls are designed for the start-up and supervision of single- or 2-stage forced draught oil burners in intermittent operation. Yellow-burning flames are supervised with photoresistive detectors QRB..., blue-burning flames with blue-flame detectors QRC...

In terms of housing dimensions, electrical connections and flame detectors, the LMO... are identical to the LOA... oil burner controls.

Preconditions for startup

Burner control is reset
All contacts in the line are closed
No undervoltage
Flame detector is darkened, no extraneous light

Undervoltage

Safety shut-down in the operating position takes place should the mains voltage drop below about AC 165 V
Restart is initiated when the mains voltage exceeds about
AC 175 V

Time supervision oil pre-heater

If the oil pre-heater's release contact does not close within 10 minutes, the burner control will initiate lock-out.

Controlled intermittent operation

After no more than 24 hours of continuous operation, the burner control will initiate an automatic safety shut-down followed by a restart.

Control sequence in the event of fault

If lock-out occurs, the outputs for the fuel valves and the ignition will immediately be deactivated (< 1 second).

Cause	Response
After a mains failure	Restart
After voltage has fallen below the undervoltage threshold	Restart
In the event of a premature, faulty flame signal during «t1»	Lock-out at the end of «t1»
In the event of a premature, faulty flame signal during «tw»	Prevention of start-up, lock-out after no more than 40 seconds
If the burner does not ignite during «TSA»	Lock-out at the end of TSA
In the event the flame is lost during operation	Max. 3 repetitions, followed by lock-out
Oil pre-heater's release contact does not close within 10 min.	Lock-out

Lock-out

In the event of lock-out, the LMO... remains locked (lock-out cannot be changed), and the red signal lamp will light up. This status is also maintained in the case of a mains failure.

Resetting the burner

Whenever lock-out occurs, the burner control can immediately be reset. To do this, keep control the lock-out reset button depressed for about 1 second (< 3 seconds).

Ignition program with LMO24.113A2

If the flame is lost during «TSA», the burner will be reignited, but not later than at the end of «TSAmax.». This means that several ignition attempts can be made during TSA (refer to «Program sequence»).

Limitation of repetitions

If the flame is lost during operation, a maximum of 3 repetitions can be made. If the flame is lost for the 4th time during operation, the burner will initiate lock-out. The repetition count is restarted each time controlled switching on by «R-W-SB» takes place.

Operation

Lock-out reset button «EK...» is the key operating element for resetting the burner control and for activating / deactivating the diagnostic functions.

The multicolour «LED» is the key indicating element for both visual diagnosis and interface diagnosis.

s red
l yellow
o green

Colour code table		
Status	Colour code	Colour
Oil pre-heater heats, waiting time «tw»	llllllllll	Yellow
Ignition phase, ignition controlled	lmlmlmlmlml	Yellow-off
Operation, flame o.k.	oooooooooooo	Green
Operation, flame not o.k.	omomomomomo	Green-off
Undervoltage	lslslslslsl	Yellow-red
Fault, alarm	sssssssssss	Red
Output of fault code (refer to Fault code table)	smsmsmsmsm	Red-off
Extraneous light prior to burner start-up	osososososo	Green-red
Interface diagnosis	ssssssssssssss	Red flicker light

Key

m Off
l Yellow
o Green
s Red

Diagnosis of cause of fault

After lock-out, the red fault signal lamp remains steady on.
In that condition, the visual diagnosis of the cause of fault according to the error code table can be activated by pressing the lock-out reset button for more than 3 seconds.

Error code table	
Blink code	**Possible cause**
2 blinks **	No establishment of flame at the end of TSA l Faulty or soiled fuel valves l Faulty or soiled flame detector l Poor adjustment of burner, no fuel l Faulty ignition
3 blinks ***	Free
4 blinks ****	Extraneous light on burner startup
5 blinks *****	Free
6 blinks ******	Free
7 blinks *******	Too manny losses of fleme during operation (limitattion og the number of repetitions) l Faulty or soiled fuel valves l Faulty or soiled flame detector l Poor adjustment of burner
8 blinks ********	Time supervision oil pre-heater
9 blinks *********	Free
10 blinks **********	Wiring error or internal error, output contacts

During the time the cause of fault is diagnosed, the control outputs are deactivated.
Burner remains shut down
Fault status signal «AL» at terminal 10 is activated
The diagnosis of the cause of fault is quit and the burner switched on again by resetting the burner control.
Press lock-out reset button for about 1 second (< 3 seconds).

Connection diagram and internal diagram

LMO14

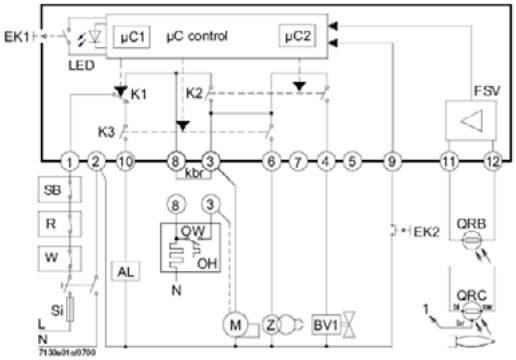

LMO24-LMO44

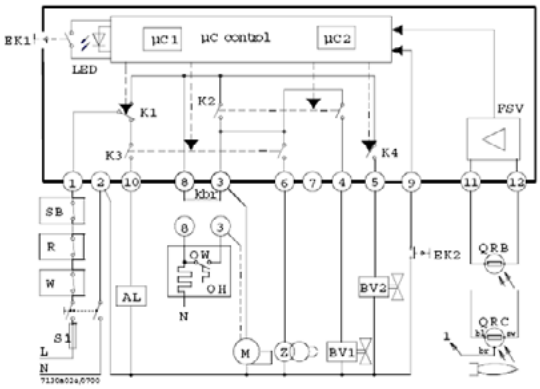

Control sequence

LMO14

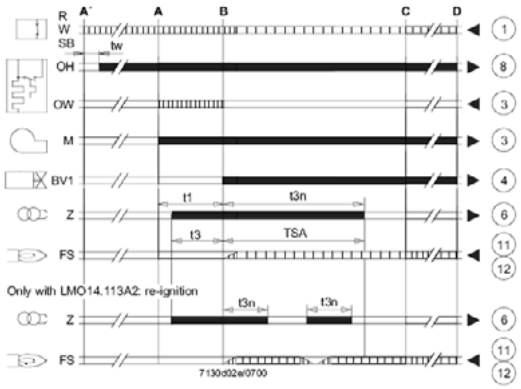

LMO24-LMO44

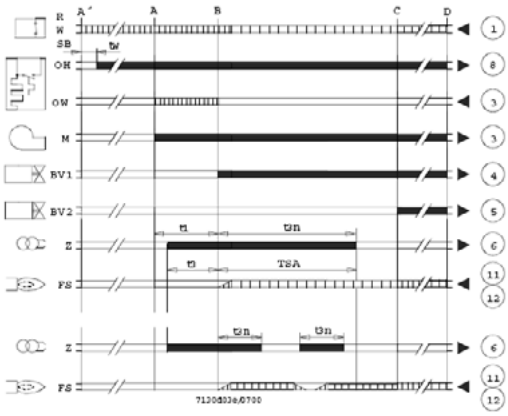

Key

AL	Alarm device
kbr...	Cable link (required only when no oil pre-heater is used)
BV...	Fuel valve
EK1	Lock-out reset button
EK2	Remote lock-out reset button
FS	Flame signal
FSV	Flame signal amplifier
K...	Contacts of control relay
LED	3-colour signal lamps
M	Burner motor
OW	Release contact of oil pre-heater
t1	Pre-purge time
t3	Pre-ignition time
t3n	Post-ignition time

A´ Beginning of start-up sequence with burners using an oil pre-heater

A Beginning of start-up sequence with burners using no oil pre-heater

Controller output signal

Required input signals

OH	Oil pre-heater
QRB	Photoresistive detector
QRC	Blue-flame detector

bl = blue
br = brown
sw = black

R	Control thermostat or pressurestat
SB	Safety limit thermostat
Si	External primary fuse
W	Limit thermostat or pressure switch
Z	Ignition transformer
t4	Interval from flame signal to release «BV2»
TSA	Ignition safety time
tw	Waiting time for oil pre-heating
B	Time of flame establishment
C	Operating position
D	Controlled shut-down by «R»
µC1	Microcontroller 1
µC2	Microcontroller 2

General unit data

Mains voltage AC 230 V +10 % / -15 %
AC 120 V +10 % / -15 %
Mains frequency 50...60 Hz ±6 %
External primary fuse (Si) 6.3A (slow)
Power consumption 12 VA
Mounting orientation optional
Weight approx. 200 g
Degree of protection IP40 (to be ensured through mounting)
Perm. cable lengthsmax. 3m at line capacitance of 100 pF/m
Detector cable laid separately 10 m
Remote reset laid separately 20m

	LMO14	***LMO24***	***LMO44***
Terminal 1	5 A	5 A	5 A
Terminals 3 and 8	3 A	5 A	5 A
Terminals 4, 5 and 10	1 A	1 A	1A
Terminals 6	1 A	1 A	2A

Flame supervision with QRB and QRC

	QRB	***QRC***
Min. detector current required (with flame)	45 µA	70 µA
Min detector current permitted (without flame)	5.5 µA	5.5 µA
Max. possible with flame (tipically)	100 µA	100 µA

Measurement circuit for detector current

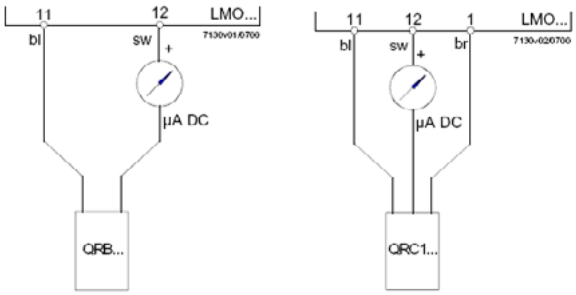

Key

µA DC DC microamperometer with an internal resistance of 5 kW max.
bl Blue
sw Black
br Brown

CIB UNIGAS

Via L.Galvani, 9 - 35011 Campodarsego (PD) - ITALY
Tel. +39 049 9200944 - Fax +39 049 9200945/9201269
web site: www.cibunigas.it - e-mail: cibunigas@cibunigas.it

Note: Specifications and data subject to change. Errors and omissions excepted.

RWF55.5X & RWF55.6X

User manual

M12926CA Rel.0.2 11/2023

DEVICE INSTALLATION

Fixing system

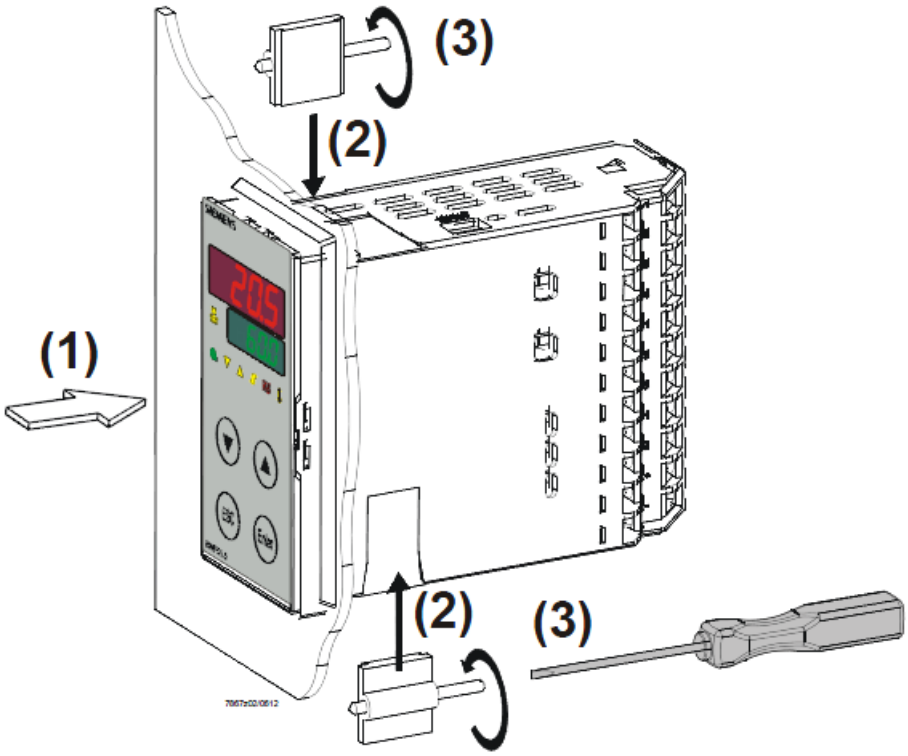

Drilling dimensions:

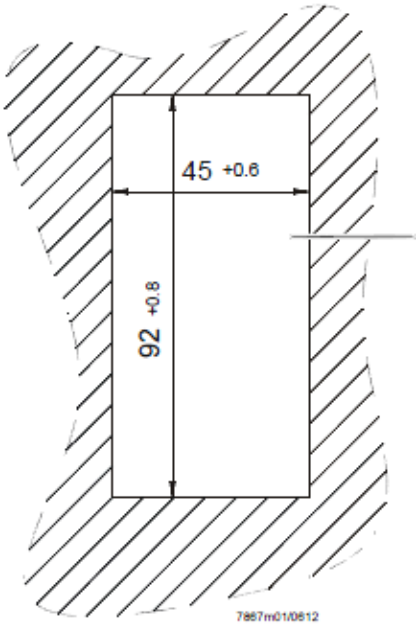

FRONT PANEL

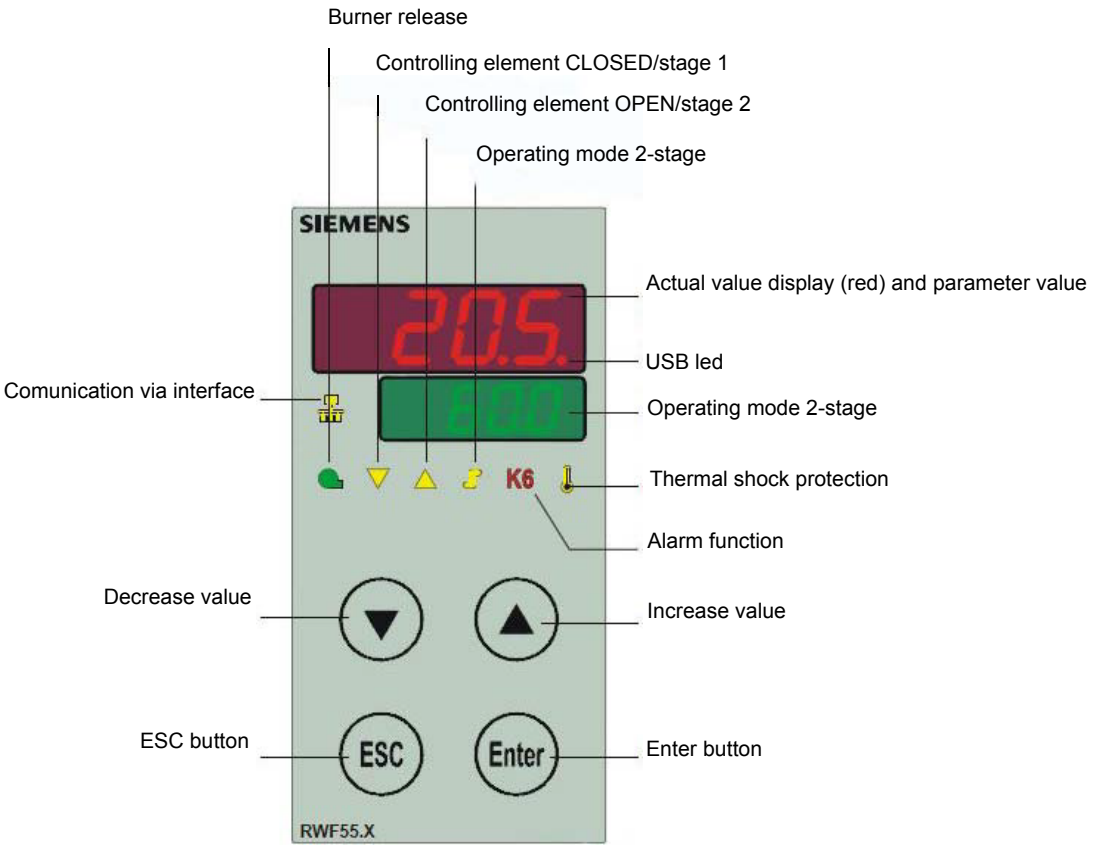
Burner release
Controlling element CLOSED/stage 1
Controlling element OPEN/stage 2
Operating mode 2-stage
SIEMENS
Actual value display (red) and parameter value
USB led
Comunication via interface
Operating mode 2-stage
K6
Thermal shock protection
Alarm function
Decrease value
Increase value
ESC button
ESC
Enter
Enter button
RWF55.X

NAVIGATION MENU

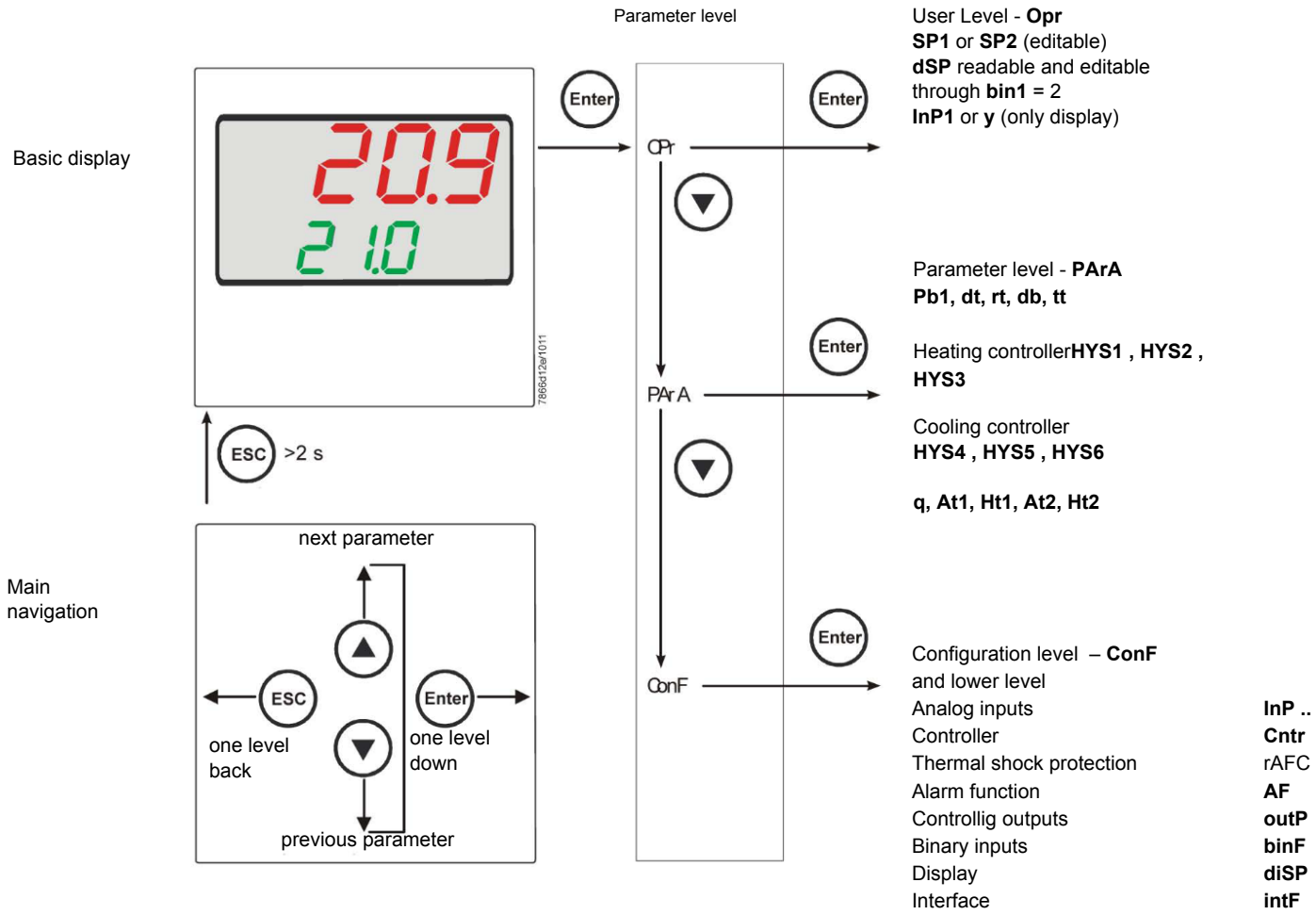

RWF55 is preset good for 90% of applications. However, you can set or edit parameters as follow:

Set-point: set or modification:

When the burner is in stand-by, (safety loop open, that is terminals 3-4/T1-T2 on the 7 pole plug open) push the Enter button: on the lower display (green) Opr appears; push Enter again and in the same display SP1 appears. Push Enter again and the lower display (green SP1) flashes. Using the up and down arrows change the set-point on the upper display (red).Push Enter to confirm and push ESC more times to get the home position.

PID parameters set and modifications (PArA):

Push **Enter** button, on the green display **Opr** appears; using the **down arrow,** scroll until group **PArA** is reached and push **Enter**.
On the green display **Pb1** e appears and on the red one the set parameter. Push is sequence the **down or up** arrow the menu is scrolled.
Push **Enter** to select and the **arrows** to choose the desired value. **Enter** to confirm

Parameter	Display	Range	Factory setting	Remarks
Proportional band	Pb1	1… 9999 digit	10	Typical value for temperature
erivative action	dt	0… 9999 sec.	80	Typical value for temperature
Integral action	rt	0… 9999 sec.	350	Typical value for temperatureT
Dead band (*)	db	0… 999,9 digit	1	Typical value
Servocontrol running time	tt	10… 3000 sec.	15	Set servocontrol running time
Switch-on differential (*)	HYS1	0,0… -1999 digit	-5	Value under setpoint below which the burner switches back on (1N-1P closes)
Switch-off differential 2° stage (*)	HYS2	0,0 … HYS3	3	(enable only with parameter bin1 = 4)
Upper switch-off differential (*)	HYS3	0,0… 9999 digit	5	Value over setpoint above which the burner switches off (1N-1P opens)
Switch-on differential on cooling controller (*)	HYS4	0,0… 9999 digit	5	Do not used (enable only with parameter **CACt** = 0)
Switch-off differential 2° stage on cooling controller (*)	HYS5	HYS6…0,0 digit	5	Do not used (enable only with parameter **CACt** = 0 and parameter **bin1**=0)
Upper switch-off differential on cooling controller (*)	HYS6	0,0… -1999 digit	5	Do not used (enable only with parameter CACt = 0)
Delay modulation	q	0,0… 999,9 digit	0	Do not alter
T Outside temperature Curve point 1 (*)	At1	-40 ...120 digit	-10	First point of external temperature for climatic curve
Boiler temperature Curve point 1 (*)	Ht1	SPL...SPH	60	Set-point temperature for the external temperature 1
TT Outside temperature Curve point 2 (*)	At2	-40 ...120 digit	20	Second point of external temperature for climatic curve
Boiler temperature Curve point 2 (*)	Ht2	SPL...SPH	50	Set-point temperature for the external temperature 2

(*) Parameters affected by setting of decimal place (**ConF > dISP** parameter **dECP**)

Setting the kind of sensor to be connected to the device:

Push the **Enter** button: on the lower display (green) **Opr** appears. Using the **up and down arrows** find **ConF.** Push **Enter** to confirm. Now on the green display the group **InP** appears. Push **Enter** and **InP1** is displaied. Enter to confirm.You are inside **InP1**; the green display shows **Sen1 (sensor type)**, while the red display shows the chosen sensor code Push **Enter** to enter the **Sen1** parameter, then choose the desired sensor using the **arrows.** Push **Enter** to confirm and **ESC** to escape.

Once selected the sensor, you can modify all the other parameters using **up and down arrows** according to the tables here below :

ConF > InP >InP1

Parameter	Value	Description
SEn1 type of sensor for analog input 1	1	Pt100 3 wire
	2	Pt100 2 wire
	3	Pt1000 3 wire
	4	Pt1000 2 wire
	5	Ni1000 3 wire
	6	Ni1000 2 wire
	7	0 ÷ 135 ohm
	8	Cu-CuNi T
	9	Fe-CuNi J
	10	NiCr-Ni K
	11	NiCrSi-NiSi N
	12	Pt10Rh-Pt S
	13	Pt13Rh-Pt R
	14	Pt30Rh-Pt6Rh B
	15	0 ÷ 20mA
	16	4 ÷ 20mA
	17	0 ÷ 10V
	18	0 ÷ 5V
	19	1 ÷ 5V
OFF1 Sensor offset	-1999..**0**.. +9999	Correction value measured by the sensor
SCL1 scale low level	-1999..**0**.. +9999	minimum scale value(for input ohm, mA, V)
SCH1 scale high level	-1999..**100**.. +9999	maximum scale value(for input ohm, mA, V)
dF1 digital filter	0…**0,6**…100	Is used to adapt the digital 2nd order input filter (time in s; 0 s = filter off)
Unit temperature unit	**1** 2	1 = **degrees** Celsius 2 = degrees Fahrenheit

(**bold** = factory settings)

ConF > InP >InP2

Input 2 : this input can be used to specify an external setpoint or carry out setpoint shifting

Parameter	Value	Description
FnC2	0 1 2 3	0= **no function** 1= external setpoint (display **SPE**) 2 =setpoint shifting (display **dSP**) 3 = angular positioning feedback
SEn2 tisensor type input 2	1	0 ÷ 20mA
	2	4 ÷ 20mA
	3	0 ÷ 10V
	4	0 ÷ 5V
	5	1 ÷ 5V
	1	0 ÷ 20mA
OFF2 Sensor offset	-1999..**0**.. +9999	Correction value measured by the sensor
SCL2 scale low level	-1999..**0**.. +9999	minimum scale value(for input ohm, mA, V)
SCH2 scale high level	-1999..**100**.. +9999	maximum scale value(for input ohm, mA, V)
dF2 digital filter	0…**2**…100	Is used to adapt the digital 2nd order input filter (time in s; 0 s = filter off)

(**bold** = factory settings)

ConF > InP >InP3

Input 3: this input is used to acquire the outside temperature

Parameter	Value	Description
SEn3 sensor type input 3sensor type input 2	0	0 =
	1	1 = wire
	2	2 = wire
OFF3 Sensor offset	-1999..**0**.. +9999	Correction value measured by the sensor
dF3 digital filter	0…**1278**…1500	Is used to adapt the digital 2nd order input filter (time in s; 0 s = filter off)

(**bold** = factory settings)

ConF > Cntr

Here, the type of controller, operating action, setpoint limits and presettings for self-optimization are selected

Parameter	Value	Description
CtYP controller type	1 2	**1 = 3-position controller (open-stop-close)** 2 = continuative action controller (0 ÷10V or 4 ÷ 20mA)
CACt control action	**1** 0	1 = **heating controller** 0 = cooling controller
SPL least value of the set-point range	-1999..**0**..+9999	minimum set-point scale
SPH maximum value of the set-point range	-1999..**100**..+999	maximum set-point scale
Self-optimization	0 1	0 = **Free** 1 = Locked Self-optimization can only be disabled or enabled via the ACS411 setup program. Self-optimization is also disabled when the parameter level is locked
oLLo set-point limitation start, operation limit low	**-1999**.... +9999	lower working range limit
oLHi set-point limitation end, operation limit high	-1999.... **+9999**	upper working range limit

(**bold** = factory settings)

ConF > rAFC

Activation boiler shock termic protetion:

RWF55.. can activate the thermal shock protection only on sites where the set-point is lower than 250°C and according to **rAL** parameter

Parameter	Value	Description
FnCT type of contol	**0** 1 2	tchoose type of range degrees/time **0 = deactived** 1 = Kelvin degrees/minute 2 = Kelvin degrees/hour
rASL ramp rate	**0,0 …** 999,9	Slope of thermal shock protection (only with functions 1 and 2) .
toLP tolerance band ramp	**2 x (HYS1) = 10**…9999	width of tolerance band (in K) about the set-point **0 = tolerance band inactive** 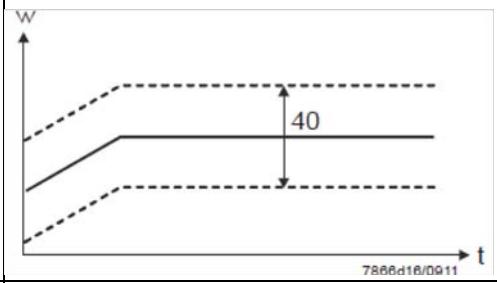
rAL ramp limit	**0**…250	Ramp limit. When this value is lower than the temperature set-point, the RWF controls the output increasing the temp set point step by step according to **rASL**. If this is over the temp set point, the control is performed in cooling

(**bold** = factory settings)

Alarm functionAF

The alarm function can be used to monitor the analog inputs. If the limit value is exceeded, multifunctional relay K6 (terminals **6N** and **6P**) is activated (depending on the switching characteristic)

The alarm function can have different switching functions (Ik1 to Ik8) and can be set to a deviation from the active setpoint or to a fixed limit value

Limit value **AL** relative to setpoint (x)

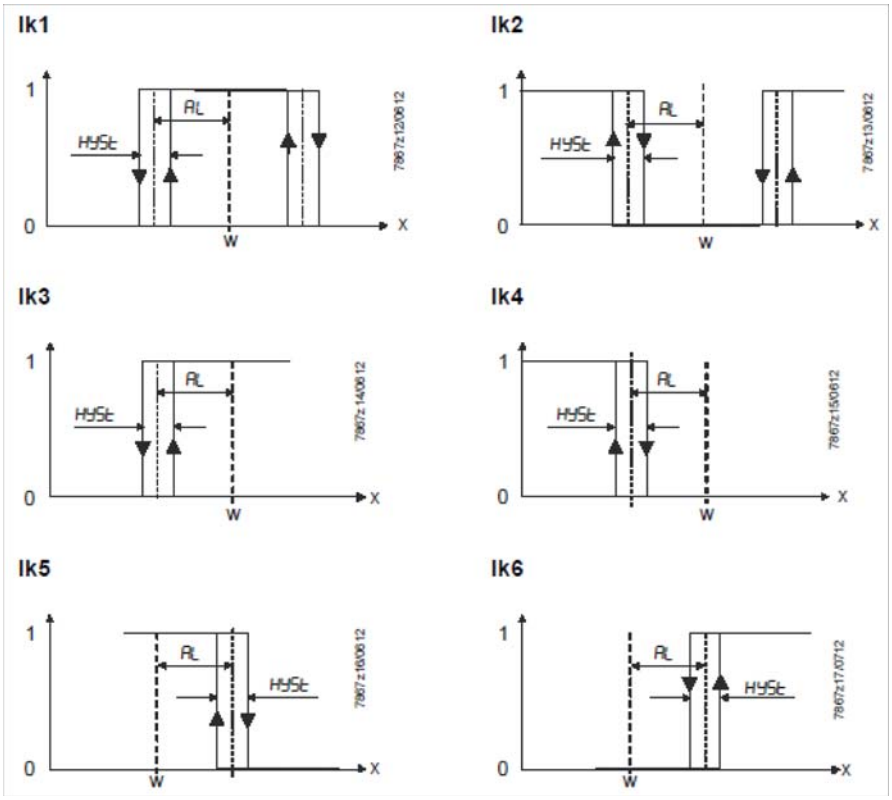

Fixed limit value **AL**

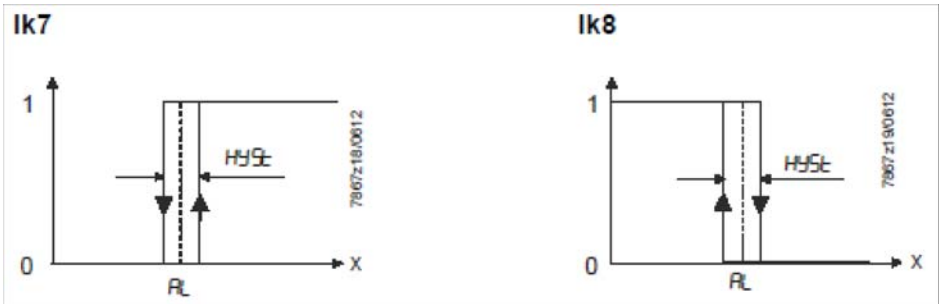

ConF > AF

Parameter	Value	Description
FnCt type of control	0 1 2 3 4 5 6 7 8 9 10 11 12	0 = **Without function** Ik1 = monitored input **InP1** Ik2 = monitored input **InP1** Ik3 = monitored input **InP1** Ik4 = monitored input **InP1** Ik5 = monitored input **InP1** Ik6 = monitored input **InP1** Ik7 = monitored input **InP1** Ik8 = monitored input **InP1** Ik7 = monitored input **InP2** Ik8 = monitored input **InP2** Ik7 = monitored input **InP3** Ik8 = monitored input **InP3**
Alarm value AL	-1999 ... **0** 1999	Limit value or deviation from setpoint to be monitored (see alarm functions **Ik1** to **Ik8**: limit value **AL**) Limit value range for **Ik1** and **Ik2**0 ...9999
HySt switching differential	0… **1**... 9999	Switching differential for limit value **AL**
ACrA response by out of range	**0** 1	**Switched-off** ON Switching state in the case of measuring range overshoot or undershoot (Out of Range)

(**bold** = factory settings)

ConF > OutP

For fuel-air ratio control purposes, the RWF55 has the binary outputs K2, K3 (terminals KQ,K2, K3) and the analog output (terminals A+, A-). The burner is released via relay K1 (terminals 1N, 1P) .

The binary outputs of the RWF55 offer no setting choices

The RWF55 has an analog output.

The analog output offers the following setting choices:

Parameter	Value	Description
FnCt type of control	1 2 3 **4**	1 = analog input 1 doubling with possibility to convert 2 = analog input 2 doubling with possibility to convert 3 = analog input 3 doubling with possibility to convert **4 = Controller's angular positioning is delivered (modulating controller)**
SiGn type of output signal	 **0** 1 2	physical output signal (terminals A+, A-) **0 = 0÷20mA** 1 = 4÷20mA 2 = 0÷10V DC
rOut value when out of input range	**0**…101	signal (in percent) when measurement range is crossed
oPnt zero point	-1999…**0**..+9999	A value range of the output variable is assigned to a physical output signal (for **FnCt** = 1, 2, 3)
End end point	-1999…**100**..+9999	A value range of the output variable is assigned to a physical output signal (for **FnCt** = 1, 2, 3)

(**bold** = factory settings)

ConF > binF

This setting decides on the use of the binary inputs**D1**, **D2**, **DG**

b

Parameter	Value	Description
bin1 binary imput 1 (terminals **DG – D1**)	**0** 1 2 3	**0 = without function** 1 = set-point changeover (SP1 / SP2) 2 = Iset-point shift (Opr > dSP parameter = value of set-point modify) 3 = input alarm
bin2 binary imput 2 (terminalsк **DG – D2**)	**4**	**changeover of operating mode** DG-D2 open = modulating operation DG-D2 close = 2 stage operation

(**bold** = factory settings)

ConF > dISP

.Both displays can be customized to suit your needs by configuring the displayed value, decimal, time out and blocking

Parameter	Value	Description
diSU pper display (red)	0 **1** 2 3 4 6 7	Display value for upper display: 0 = display power-off **1 = analog input 1 (InP1) value** 2 = analog input 2 (InP2) value 3 = analog input 3 (InP3) value 4 = controller's angular positioning 6 = set-point valueв 7 = end value with thermal shock protection
diSL lower display (green)	0 1 2 3 4 **6** 7	Display value for lower display3: 0 = display power-off 1 = analog input 2 (InP2) value 2 = analog input 2 (InP2) value 3 = analog input 2 (InP2) value 4 = controller's angular positioning **6 =** set-point valueв 7 = end value with thermal shock protection
tout timeout	0..**180**..250	time (s) on completion of which the controller returns automatically to the basic display, if no button is pressed
dECP decimal point	**0** 1 2	**0 = no decimal place** 1 = one decimal place 2 = two decimal place
CodE level lockout	**0** 1 2 3	**0 = no lockout** 1 = configuration level lockout (**ConF**) 2 = parameter and configuration level lockout (**PArA** & **ConF**) 3 = keyboard lockout

(**bold** = factory settings)

ConF > IntF

The controller can be integrated into a data network using an optional RS-485 (terminals R+ and R-) interface or an optional Profibus DP interface(only model**RWF55.6x** terminalsC1-C2-C3-C4)

Parameter	Value	Description
bdrt baudrate	**0** 1 2 3	**0 = 4800 baud** 1 = 9600 baud 2 = 19200 baud 3 = 38400 baud
Adr Device address Modbus	0.. **1**.. 254	Address in the data network
dP Device address Profibus	0..**125**	only withRWF55.6x
dtt Remote detection time	0.. **30**.. 7200s	0 = swiched-off

(**bold** = factory settings)

Manual control :

In order to manual change the burner load, while firing keep pushing the **ESC** button for more than 5 s; on the lower green display **Hand** appears.

using the **UP** and **DOWN** arrows, the load varies.

Keep pushing the **ESC** button for getting the normal operation again.

NB: every time the device shuts the burner down (start led switched off - contact 1N-1P open), the manual control is not active.

Device self-setting (auto-tuning):

If the burner in the steady state does not respond properly to heat generator requests, you can activate the Device's self-setting function, which recalculates PID values for its operation, deciding which are most suitable for the specific kind of request

Follow the below instructions:

push the **UP** and **DOWN** arrows for more than 5 s; on the green lower display **tUnE** appears. Now the device pushes the burner to increase and decrease its output. During this time, the device calculates **PID** parameters (**Pb1**, **dt** and **rt**). After the calculations, the **tUnE** is automatically deactivated and the device has already stored them.

In order to stop the Auto-tuning function while it works, push again the **UP** and **DOWN** arrows for more than 5 s. The calculated **PID** parameters can be manually modified following the previously described instructions.

Display of software version :

The software version is shown by pushing Enter + UP arrow on the upper display.

Weather-compensated setpoint shifting(climatic regulation):

The RWF55 can be configured so that weather-compensated setpoint shifting is activated when an LG-Ni1000 outside sensor or a Pt1000 is connected (see parameter **InP3**).

To take into account the time response of a building, weather-compensated setpoint shifting uses the attenuated outside temperature rather than the current outside temperature

The minimum and maximum setpoints can be set using the lower setpoint limit **SPL** and the upper setpoint limit **SPH** of the menù **Crtr**.

The system also prevents the lower working range limit **oLLo** and upper working range limit **oLHi** from exceeding/dropping below the system temperature limits.

The heating curve describes the relationship between the boiler temperature setpoint and the outside temperature. It is defined by 2 curve points. For 2 outside temperatures, the user defines the boiler temperature setpoint that is required in each case. The heating curve for the weather-compensated setpoint is calculated on this basis. The effective boiler temperature setpoint is limited by the upper setpoint limit **SPH** and the lower setpoint limit **SPL**.

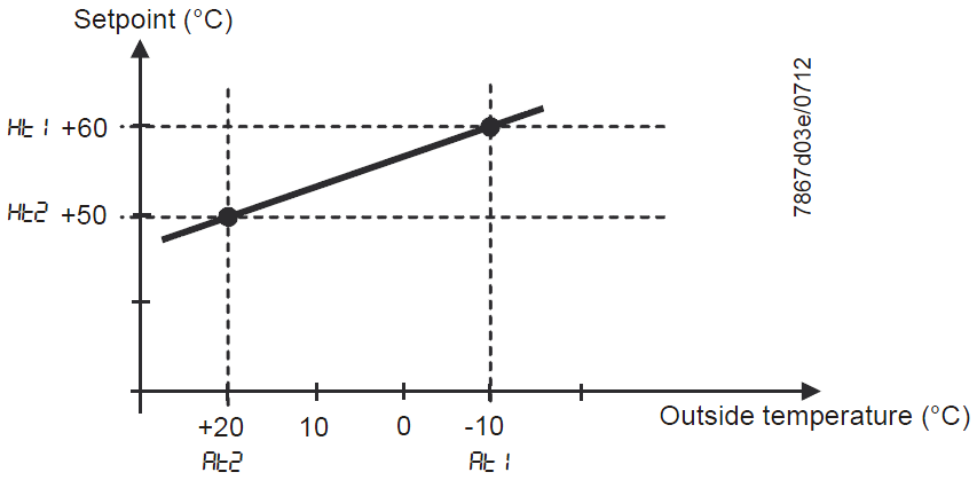

For setting climatic regulation function set:

PArA > parameters**At1, Ht1, At2, Ht2**

ConF > InP > InP3 parameters**SEn3, FnC3 = 1** (Weather-compensated setpoint).

Modbus interface

The tables that follow in this chapter specify the addresses of the readable and writable words that the customer is able to access. The customer may read and/or write the values using SCADA programs, PLCs, or similar.

The entries under Access have the following meanings:

R/O Read Only, value can only be read

R/W Read/Write, value can be read and written

The number of characters specified under Data type in the case of character strings includes the final \0.

Char10 means that the text is up to 9 characters long. The final \0 character is then added to this

User level

Address	**Access**	**Data type**	Signal reference	Parameter
0x0000	R/O	Float	X1	Analog input InP1
0x0002	R/O	Float	X2	Analog input InP2
0x0004	R/O	Float	X3	Analog input InP2
0x0006	R/O	Float	WR	Actual setpoint
0x0008	R/W	Float	SP1	Setpoint 1
0x000A	R/W	Float	SP2 (= dSP)	Setpoint 2
0x1035	R/O	Float	---	Analog input InP3 (unfiltered)
0x1043	R/O	Float	---	Actual angular positioning
0x1058	R/O	Word	B1	Burner alarm

Parameter level

Address	**Access**	**Data type**	Signal reference	Parameter
0x3000	R/W	Float	Pb1	Proportional range 1
0x3004	R/W	Float	dt	Derivative action time
0x3006	R/W	Float	rt	Integral action time
0x300C	R/W	Float	db	Dead band
0x3012	R/W	Word	tt	Controlling element running time
0x3016	R/W	Float	HYS1	Switch-on threshold
0x3018	R/W	Float	HYS2	Switch-off threshold down
0x301A	R/W	Float	HYS3	Switch-off threshold up
0x301C	R/W	Float	HYS4	Switch-on threshold (cooling)
0x301E	R/W	Float	HYS5	Switch-off threshold down (cooling)
0x3020	R/W	Float	HYS6	Switch-off threshold up (cooling)
0x3022	R/W	Float	**q**	Reaction threshold
0x3080	R/W	Float	At1	Outside temperature 1
0x3082	R/W	Float	Ht2	Boiler temperature 1
0x3084	R/W	Float	At2	Outside temperature 2
0x3086	R/W	Float	Ht2	Boiler temperature 2

Configuration level

Address	Access	Data type	Signal reference	Parameter
0x3426	R/W	Float	SCL1	Start of display input 1
0x3428	R/W	Float	SCH1	End of display input 1
0x3432	R/W	Float	SCL2	Start value input 2
0x3434	R/W	Float	SCH2	End value input 2
0x3486	R/W	Float	SPL	Start of setpoint limitation
0x3488	R/W	Float	SPH	End of setpoint limitation
0x342A	R/W	Float	OFFS1	Offset input E1
0x3436	R/W	Float	OFFS2	Offset input E2
0x343A	R/W	Float	OFFS3	Offset input E3
0x1063	R/W	Word	FnCt	Ramp function
0x1065	R/W	Float	rASL	Ramp slope
0x1067	R/W	Float	toLP	Tolerance band ramp
0x1069	R/W	Float	rAL	Limit value
0x1075	R/W	Float	dtt	Remote Detection Timer
0x1077	R/W	Float	dF1	Filter constant input 1
0x1079	R/W	Float	dF2	Filter constant input 2
0x107B	R/W	Float	dF3	Filter constant input 3
0x107D	R/O	Float	oLLo	Lower working range limit
0x107F	R/O	Float	oLHi	Upper working range limit
0x106D	R/W	Word	FnCt	Alarm relay function
0x106F	R/W	Float	AL	Alarm relay limit value (limit value alarm)
0x1071	R/W	Float	HYSt	Alarm relay hysteresis

Remote operation

Address	Access	Data type	Signal reference	Parameter
0x0500	R/W	Word	REM	Activation remote operation *
0x0501	R/W	Word	rOFF	Controller OFF in remote setpoint **
0x0502	R/W	Float	rHYS1	Switch-on threshold remote
0x0504	R/W	Float	rHYS2	Switch-off threshold down remote
0x0506	R/W	Float	rHYS3	Switch-off threshold up remote
0x0508	R/W	Float	SPr	Setpoint remote
0x050A	R/W	Word	RK1	Burner release remote operation
0x050B	R/W	Word	RK2	Relay K2 remote operation
0x050C	R/W	Word	RK3	Relay K3 remote operation
0x050D	R/W	Word	RK6	Relay K6 remote operation
0x050E	R/W	Word	rStEP	Step-by-step control remote operation
0x050F	R/W	Float	rY	Angular positioning output remote operation
0x0511	R/W	Float	rHYS4	Switch-on threshold remote (cooling)
0x0513	R/W	Float	rHYS5	Switch-off threshold down remote (cooling)
0x0515	R/W	Float	rHYS6	Switch-off threshold up remote (cooling)

Legend
* = Local
** = Controller OFF

Dati dell'apparecchio

Address	Access	Data type	Signal reference	Parameter
0x8000	R/O	Char12	---	Software version
0x8006	R/O	Char14	---	VdN number

Stato dell'apparecchio

Address	Access	Data type	Signal reference	Parameter
0x0200	R/O	Word	---	Outputs and states
			Bit 0	Output 1
			Bit 1	Output 3
			Bit 2	Output 2
			Bit 3	Output 4
			Bit 8	Hysteresis limitation
			Bit 9	Control system
			Bit 10	Self-optimization
			Bit 11	Second setpoint
			Bit 12	Measuring range overshoot InP1
			Bit 13	Measuring range overshoot InP2
			Bit 14	Measuring range overshoot InP3
			Bit 15	Calibration mode
0x0201	R/O	Word	---	Binary signals and hardware detection
			Bit 0	Operation mode 2-stage
			Bit 1	Manual mode
			Bit 2	Binary input D1
			Bit 3	Binary input D2
			Bit 4	Thermostat function
			Bit 5	First controller output
			Bit 6	Second controller output
			Bit 7	Alarm relay
			Bit 13	Analog output available
			Bit 14	Interface available

Electric connections :

With 7 pins connector version

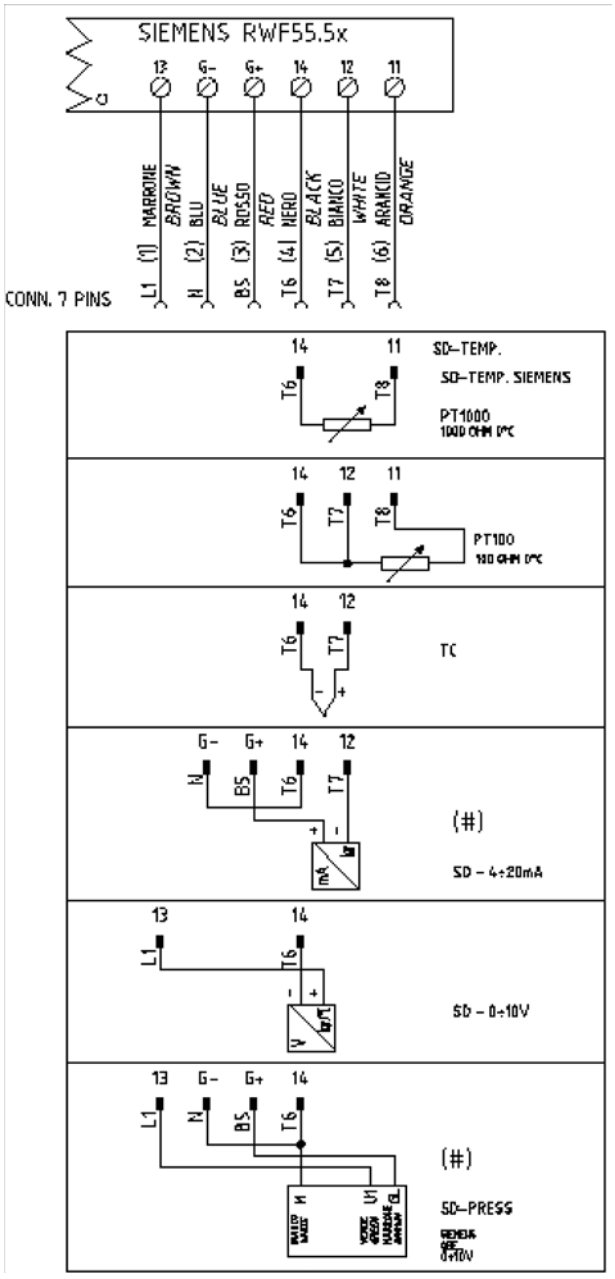

With terminals version

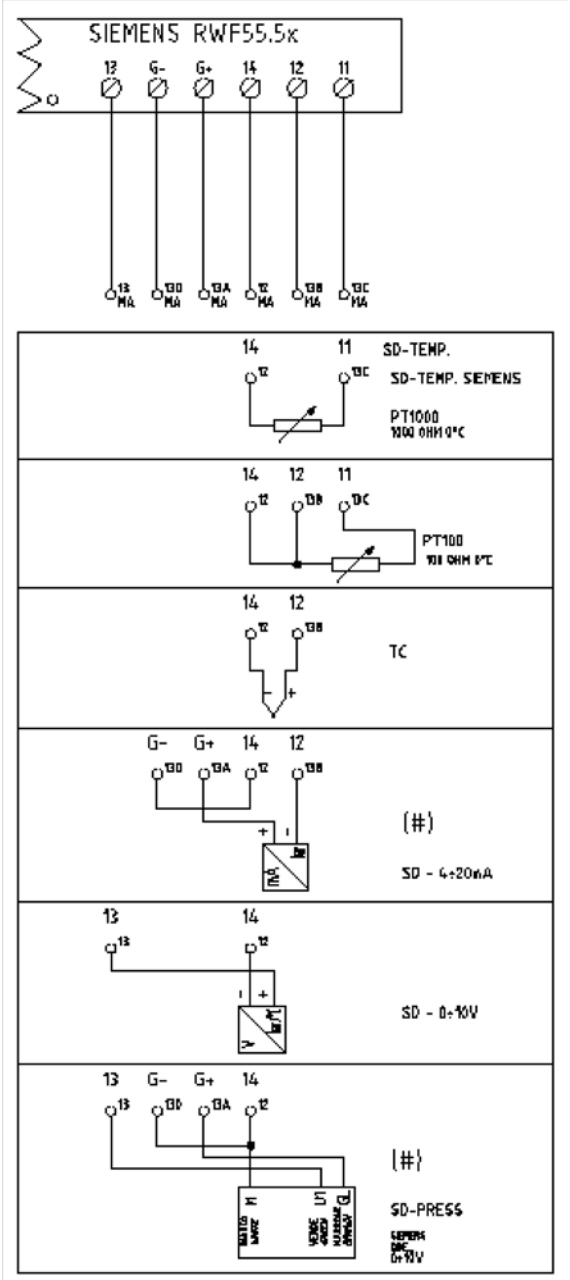

Corrispondences bornes entre RWF55.5x y RWF40.0x0Matches terminals betweenRWF55.5x and RWF40.0x0

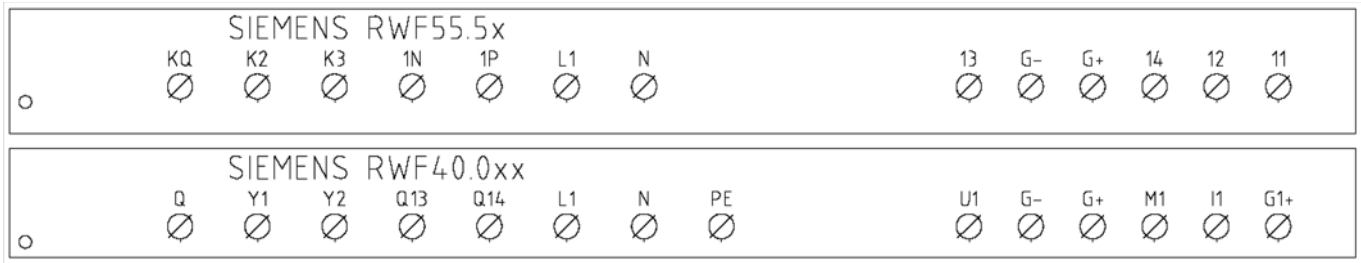

Parameters summarising for RWF55.xx :

Navigation menù	ConF					ConF									
	Inp														
	Inp1					Cntr		diSP	PArA						Opr
Types of probe	SEn1	OFF1	SCL	SCH	Unit	SPL	SPH	dECP	Pb. 1	dt	rt	tt	HYS1 (*)	HYS3 (*)	SP1 (*)
Siemens QAE2120…	6	0	needless	needless	1	30	95	1	10	80	350	(#)	-5	5	80 °C
Siemens QAM2120..	6	0	needless	needless	1	0	80	1	10	80	350	(#)	-2,5	2,5	40°C
Pt1000 (130°C max.)	4	0	needless	needless	1	30	95	1	10	80	350	(#)	-5	5	80°C
Pt1000 (350°C max.)	4	0	needless	needless	1	0	350	1	10	80	350	(#)	-5	10	80°C
Pt100 (130°C max.)	1	0	needless	needless	1	0	95	1	10	80	350	(#)	-5	5	80°C
Pt100 (350°C max)	1	0	needless	needless	1	0	350	1	10	80	350	(#)	-5	10	80°C
Probe4÷20mA / 0÷1,6bar	16	0	0	160	needless	0	160	0	5	20	80	(#)	0	20	100 kPa
Probe4÷20mA / 0÷3bar	16	0	0	300	needless	0	300	0	5	20	80	(#)	0	20	200 kPa
Probe 4÷20mA / 0÷10bar	16	0	0	1000	needless	0	1000	0	5	20	80	(#)	0	50	600 kPa
Probe 4÷20mA / 0÷16bar	16	0	0	1600	needless	0	1600	0	5	20	80	(#)	0	80	600 kPa
Probe 4÷20mA / 0÷25bar	16	0	0	2500	needless	0	2500	0	5	20	80	(#)	0	125	600 kPa
Probe 4÷20mA / 0÷40bar	16	0	0	4000	needless	0	4000	0	5	20	80	(#)	0	200	600 kPa
Probe 4÷20mA / 0÷60PSI	16	0	0	600	needless	0	600	0	5	20	80	(#)	0	30	300 (30PSI)
Probe4÷20mA / 0÷200PSI	16	0	0	2000	needless	0	2000	0	5	20	80	(#)	0	75	600 (60PSI)
Probe4÷20mA / 0÷300PSI	16	0	0	3000	needless	0	3000	0	5	20	80	(#)	0	120	600 (60PSI)
Siemens QBE2002 P4	17	0	0	400	needless	0	400	0	5	20	80	(#)	0	20	200 kPa
Siemens QBE2002 P10	17	0	0	1000	needless	0	1000	0	5	20	80	(#)	0	50	600 kPa
Siemens QBE2002 P16	17	0	0	1600	needless	0	1600	0	5	20	80	(#)	0	80	600 kPa
Siemens QBE2002 P25	17	0	0	2500	needless	0	2500	0	5	20	80	(#)	0	125	600 kPa
Siemens QBE2002 P40	17	0	0	4000	needless	0	4000	0	5	20	80	(#)	0	200	600 kPa
Signal 0÷10V	17	0	needless	needless	needless	needless	needless	needless	5	20	80	(#)			
Signal 4÷20mA	16	0	needless	needless	needless	needless	needless	needless	5	20	80	(#)			

NOTE:
(#) tt – servo control run time
SQL33 ; STM30; SQM10; SQM40; SQM50; SQM54 = 30 (secondi) - STA12B3.41; SQN30.251; SQN72.4A4A20 = 12 (secondi)
(*)These values are factory set - values must be set during operation at the plant based on the real working temperature/pressure value.

WARNING :
With pressure probes in bar the parameters SP1, SCH, SCL, HYS1, HYS3 must be set and displayed in kPa (kilo Pascal); 1bar = 100,000Pa = 100kPa.
With pressure probes in PSI the parameters SP1, SCH, SCL, HYS1, HYS3 must be set and displayed in PSI x10 (example: 150PSI > I display 1500).

APPENDIX: PROBES CONNECTION

To assure the utmost comfort, the control system needs reliable information, which can be obtained provided the sensors have been installed correctly. Sensors measure and transmit all variations encountered at their location.

Measurement is taken based on design features (time constant) and according to specific operating conditions.With wiring run in raceways, the sheath (or pipe) containing the wires must be plugged at the sensor's terminal board so that currents of air cannot affect the sensor's measurements.

Ambient probes (or ambient thermostats)

Installation

The sensors (or room thermostats) must be located in reference rooms in a position where they can take real temperature measurements without being affected by foreign factors.

It's good to be admired …even better to be effective

Heating systems: the room sensor must not be installed in rooms with heating units complete with thermostatic valves. Avoid all sources of heat foreign to the system.

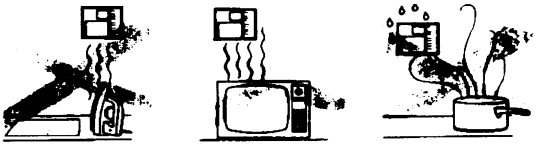

Location

On an inner wall on the other side of the room to heating unitsheight above floor 1.5 m, at least 1.5 m away from external sources of heat (or cold).

.

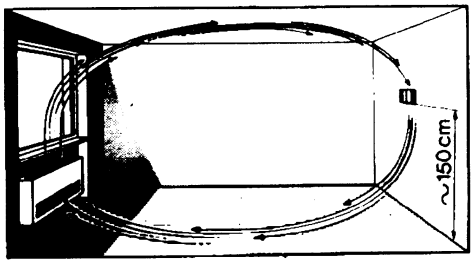

Installation position to be avoided

near shelving or alcoves and recesses, near doors or win-dows, inside outer walls exposed to solar radiation or currents of cold air, on inner walls with heating system pipes, domestic hot water pipes, or cooling system pipes running through them.

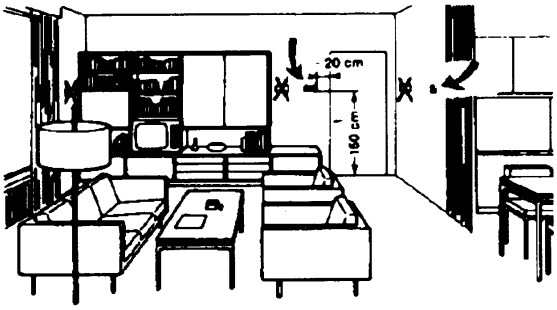

Outside probes (weather)Installation

In heating or air-conditioning systems featuring adjustment in response to outside temperature, the sensor's positioning is of paramount importance.

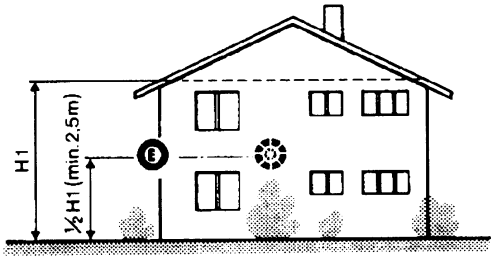

General rule: en on the outer wall of the building where the living rooms are, never on the south-facing wall or in a position where they will be affected by morning sun. If in any doubt, place them on the north or north-east façade.

Positions to be avoidedH

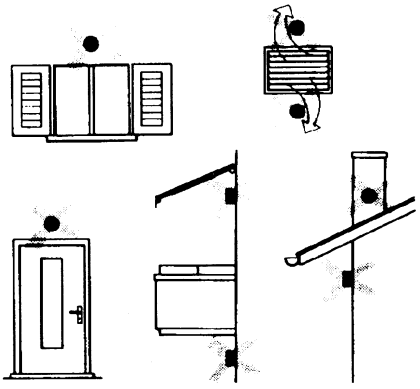

Avoid installing near windows, vents, outside the boiler room, on chimney breasts or where they are protected by balconies, cantilever roofs .

The sensor must not be painted (measurement error) .

Duct or pipe sensors

Installing temperature sensors

For measuring outlet air:

"after delivery fan or

"after coil to be controlled, at a distance of at least 0,5 m

For measuring room temperature:

"before return air intake fan and near room's return airintake.

For measuring saturation temperature: after mist eliminator.

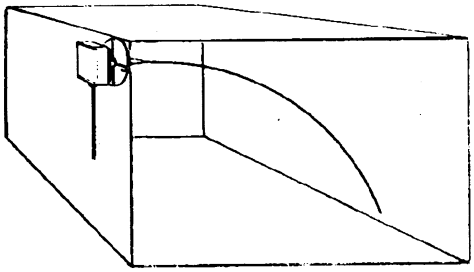

Bend 0.4m sensor by hand (never use tools) as illustrated .

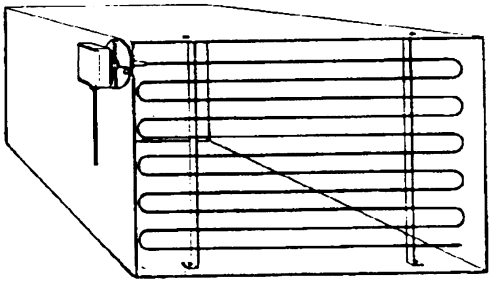

Use whole cross-section of duct, min. distance from walls 50 mm, radius of curvature 10 mm for 2m or 6m sensors

Installing combined humidity sensors

As max. humidity limit sensor on outlet (steam humidifiers) .

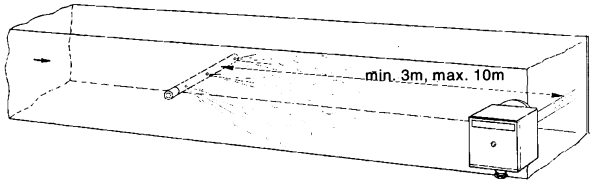

Installing pressure sensors

A - installation on ducts carrying fluids at max. temperature 80°C

B - installation on ducts at temperature over 80°C and for refrigerants

C - installation on ducts at high temperatures :

·"increase length of siphon

"place sensor at side to prevent it being hit by hot air coming from the pipe.

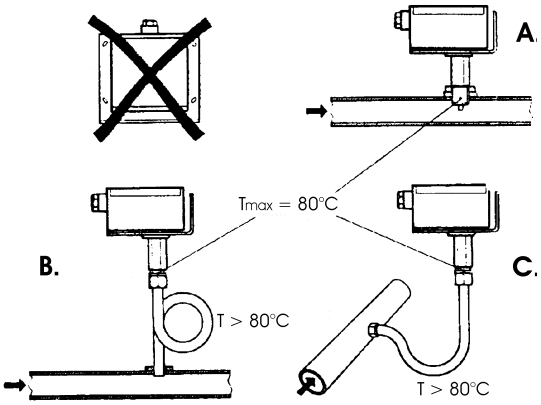

Installing differential pressure sensors for water

Installation with casing facing down not allowed.

With temperature over 80°C, siphons are needed.

To avoid damaging the sensor, you must comply with the following instructions :

when installing: make sure pressure difference is not greater than the value permitted by the sensor

when there are high static pressures, make sure you insert shutoff valves A-B-C.

Putting into operation

Start disable

1=open C1=open C

2=open A2=close B

3=open B3=close A

4= close C

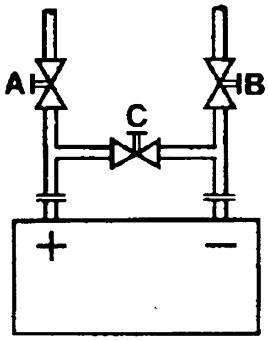

Immersion or strap-on sensors

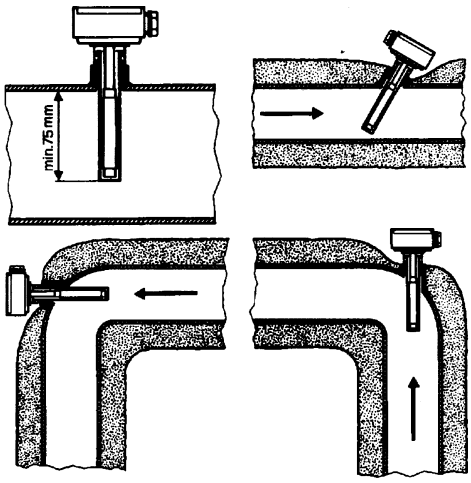

Immersion probes installation

Sensors must be installed on the stretch of pipe in which fluid circulates all the time.

The rigid stem (sensing element doing the measuring) must be inserted by at least 75mm and must face the direction of flow.

Recommended locations: on a bend or on a straight stretch of pipe but tilted by 45° and against the flow of fluid.

Protect them to prevent water from infiltrating (dripping gates, condensation from pipes etc.) .

Installing QAD2.. strap-on sensors

Make sure fluid is circulating in the chosen location.

Eliminate insulation and paintwork (including rust inhibitor) on a min. 100mm length of pipe.

Sensors come with straps for pipes up to 100 mm in diameter .

Placing the probes (QAD22.../QAE21.../QAP21.../RCA...)

With pumps on outlet

with 3 ways valves / with 4 ways valves

Panel system / burner control

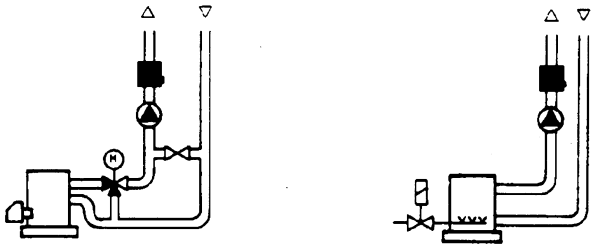

With pumps on return

with 3 ways valves / with 4 ways valves

Strap-on or immersion sensors?

QAD2.. strap-on sensors

Advantages :

- 10 sec. time constant
- Installed with system running (no plumbing work)
- Installation can be changed easily if it proves incorrect

ΠLimits:

- Suitable for pipe diameters max. 100 mm
- Can be affected by currents of air etc.

QAE2... immersion sensors

Advantages:

- Measure "mean" fluid temperature
- No external influence on measurement such as: currents of air, nearby pipes etc.

Limits:

- Time constant with sheath: 20 sec.
- Hard to change installation position if it proves incorrect

Installing differential pressure probes for air

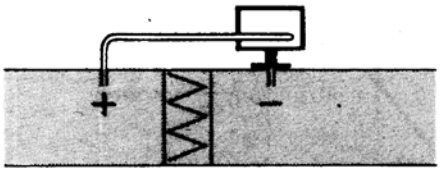

A - Control a filter (clogging)

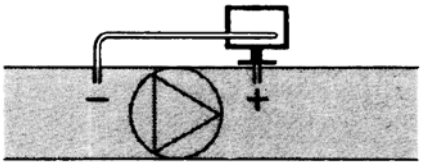

B - Control a fan (upstream/downstream)

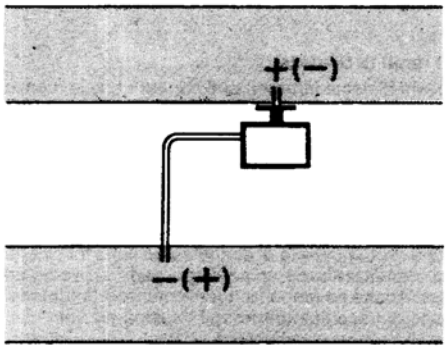

C - Measurement of difference in pressure between two ducts

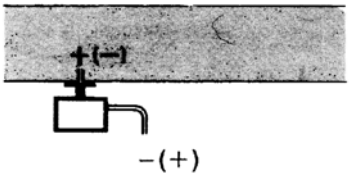

D - Measurement of difference in pressure between two rooms or of inside of duct and outside

Basic principles

Measuring static pressure(i.e. pressure exerted by air on pipe walls)

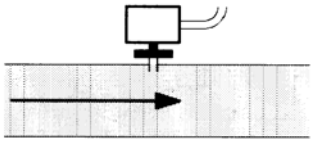

Measuring dinamic pressure

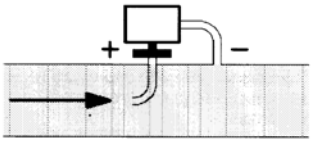

$$Pd = \frac{y\,\vartheta^2}{2g}$$

Legend

y	Kg/m3, specific weight of air
q	m/s, air speed
g	9.81 m/s2 gravity acceleration
Pd	mm C.A., dynamic pressure

Measuring total pressure

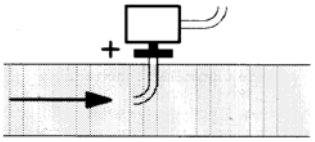

Note: Specifications and data subject to change. Errors and omissions excepted.

MANUALE USER SUPPORT

MULTI-THERMOSTAT

MCX06C

MCX06C is a multi-thermostat with four 100k NTC inputs. It can control up to 4 temperatures showing them (not more than 2 at the same time) on a couple of displays.
It is used to check and adjust oil heater temperatures. it works as follows:
as soon as the burner control gives the GO to the digital 1 input (terminals DI1-COM), the adjustment program runs (the relevant LED is ON). Reading the outlet temperature through the probe **Pb3** (terminals AI3-COM), a PID signal is produced. This signal becomes the set-point for the electric resistors. The electric resistors temperature is read through the probe **Pb1** (terminals AI1-COM) so that a second PID signal is produced. This second PID drives a couple of SCR by means of 0-10 V impulses in order to control the electric resistors temperature.
When the burner is in stand-by, resistor set-point is kept at the temperature set in parameter "**p30**" (see parameter group **REG**).
Probe **Pb4** (terminals AI4-COM) controls the inner heater temperature. As soon the relevant set-point is got, it drives the output number 4 (terminals C4-NO4) linked to the relais KTCN. This allows the oil pump to start and also the burner control proceeds with its cycle.
When set-point **trS** is got to, output number 5 is ON (terminals C5-NO5) linked to the relais KTRS. It switches the resistors off and activates an alarm on the device.
Probe **Pb2** (terminals AI2-COM), when fitted, drives output number 2 (terminals C2-NO2) linked to the relais KTCI. This allows the burner control to proceed with ignition.
See below the set-point recommended figures.

User interface:

Device:

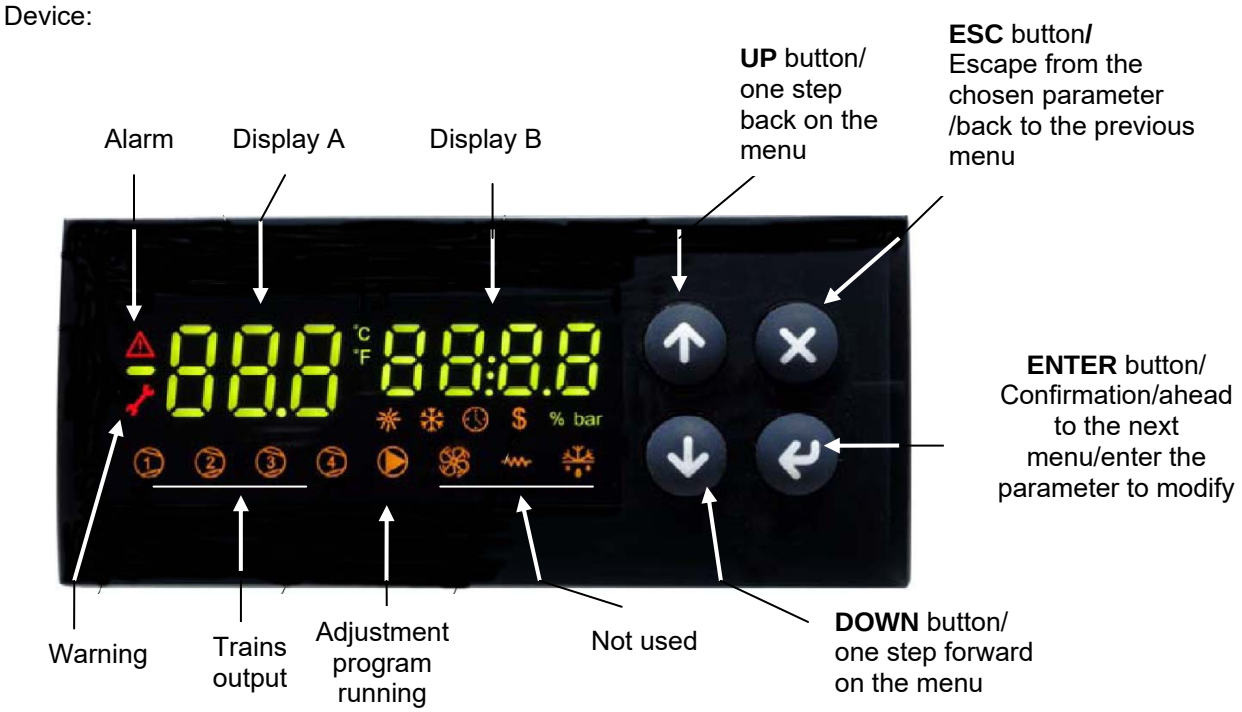

Note :
In normal operation, the display A shows the oil tank resistor temperature (probe Pb1).
In normal operation, the display B shows the oil output temperature (probe Pb3).

Connections from terminal side :

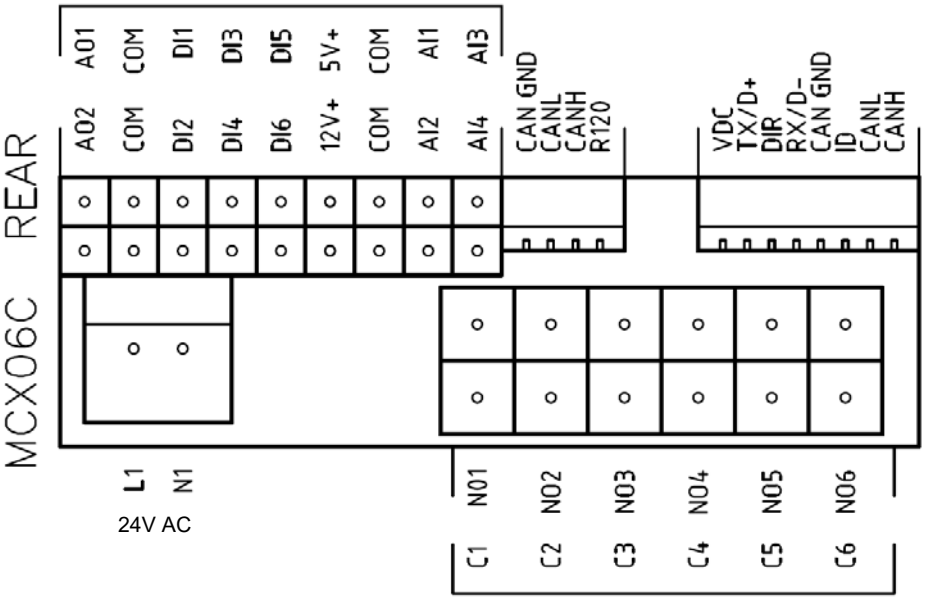

Probe connection:

input **AI1** = probe **Pb1** = set-point "**tr**" = oil heater temperature probe;
input **AI2** = probe **Pb2** = set-point "**tCI**" = plant consent temperature probe (when installed);
input **AI3** = probe **Pb3** = set-point "**OIL**" = oil heater output temperature probe (PID regulation);
input **AI4** = probe **Pb4** = set-point "**tcn**" = oil heater consent temperature probe.

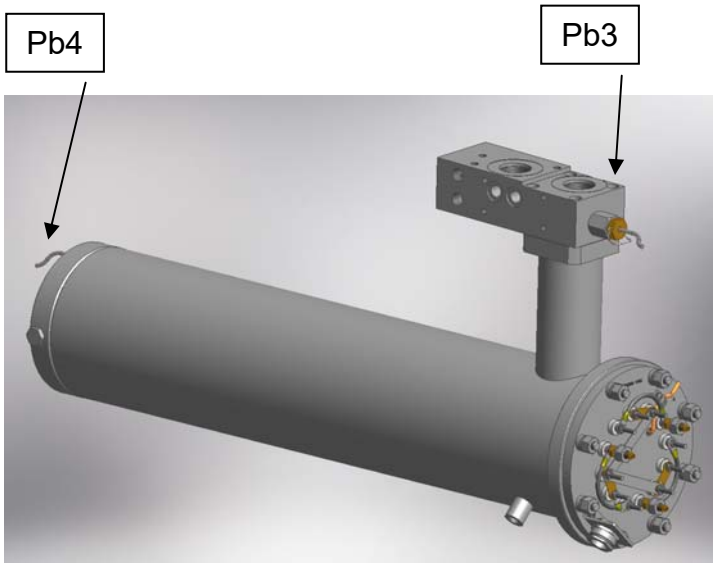

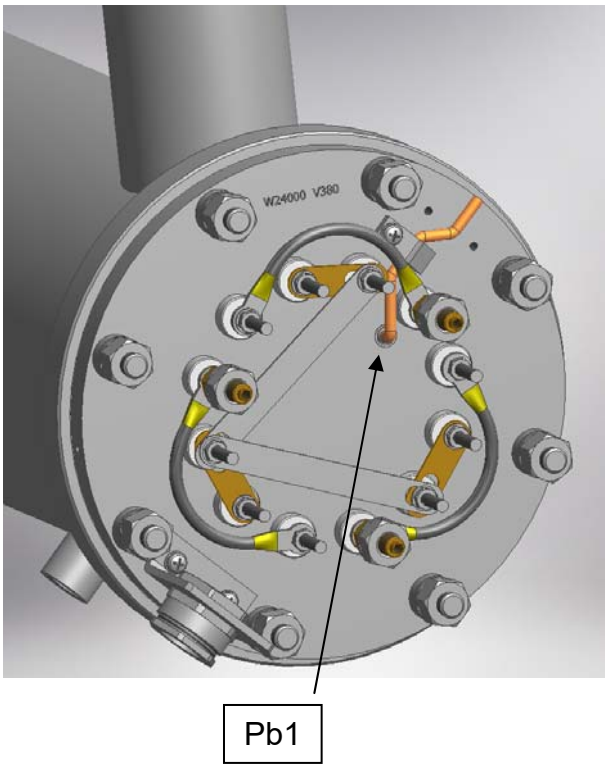

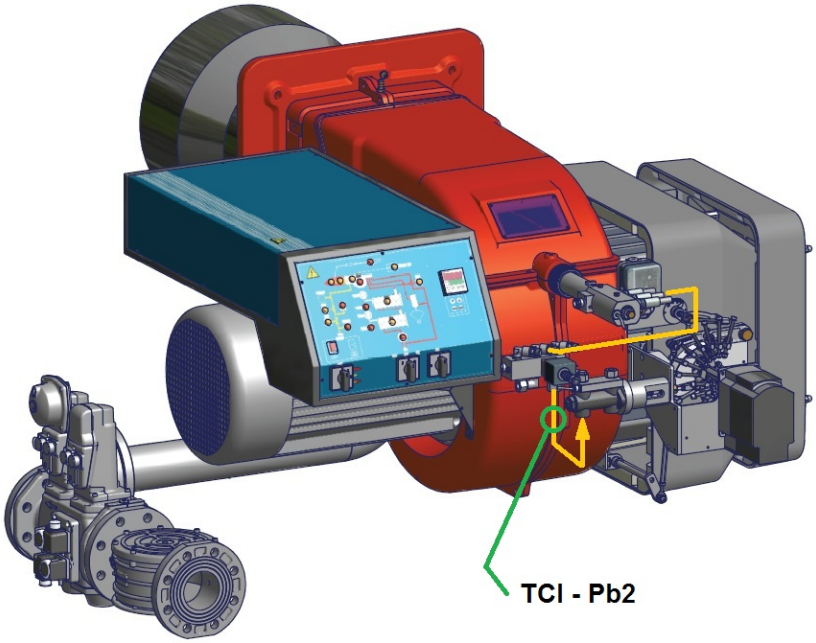

(**tCI - Pb2** probe only for mechanical atomizing burners)

Menu :
To enter the menu below, keep pushing **ENTER** for more than 3 s.

Menu code	Sub-menu code	Function	Notes
Prb		Probes values	You can see in sequence the 4 probe values (UP and DOWN keys): the probe code is on display A (Pb1,..., Pb4) and the probe value is on display B (not fitted or out of work probes show "----").
Log		Login	It defines the access level to menu and parameters (password)
	PAS	Password	Password input
Par		Parameters menu	Access to parameters (you have to login first)
	CnF	Configuration menu	Parameter configuration
	rEG	Regulation menu	Set to set-point, probe, thresholds etc.
ALA		Alarm menu	Access to alarm management
	Act	Active alarms	Show the active alarms
	rES	Reset alarms	Reset of the manual reset alarms
Loc		Lock/Unlock functions	Not used
InF	rEL	Software version	Installed software version
tUN		Autotuning	Activation On, deactivation ESC PID parameter autotuning

Login:
All the parameters inside the **Par** menu are locked by a password.
Without password, only set-points can be modified.
To login, on the log menu, press **ENTER** for more than 3 s. Input your password (level 2 or 3) inside **PAS**
With password for level 3 all the data can be set.

submenu **CnF - configuration parameters group :**

Menu	Parameter	Description	Additional description	Min	Max	Default	U.M.	Visibility condition	Password level	Modbus index
CnF		**CONFIGURATION**							0	
AI1		Analog Input 1							1	
	A1P	Probe 1 Presence	This parameter enables or disables the probe	0	1	1			2	1
	A1C	Calibration Probe 1	Don't modify it	-20,0	20,0	0,0	°C	A1P >0	3	2
AI2		Analog Input 2							1	
	A2P	Probe 2 Presence	This parameter enables or disables the probe	0	1	1			2	3
	A2C	Calibration Probe 2	Don't modify it	-20,0	20,0	0,0	°C	A2P >0	3	4
AI3		Analog Input 3							1	
	A3P	Probe 3 Presence	This parameter enables or disables the probe	0	4	1			2	5
	A3L	Min. Value conversion AI3	Don't modify it	-999,9	999,9	0,0		A3P >2	3	6
	A3H	Max. Value conversion AI3	Don't modify it	-999,9	999,9	30,0		A3P >2	3	7
	A3C	Calibration Probe 3	Don't modify it	-20,0	20,0	0,0	°C	A3P >0	3	8
AI4		Analog Input 4							1	
	A4P	Probe 4 Presence	This parameter enables or disables the probe	0	4	1			2	9
	A4L	Min. Value conversion AI4	Don't modify it	-999,9	999,9	0,0		A4P >2	3	10
	A4H	Max. Value conversion AI4	Don't modify it	-999,9	999,9	30,0		A4P >2	3	11
	A4C	Calibration Probe 4	Don't modify it	-20,0	20,0	0,0	°C	A4P >0	3	12
dI		Digital input							1	
	dI1	Input 1 polarity (Pump)	Change type of digital input (NC o NO)	0	1	1			3	13
	dI2	Alarm polarity from input 2	Change type of digital input (NC o NO)	0	2	2			2	14
	dI3	Alarm polarity from input 3	Change type of digital input (NC o NO)	0	2	2			2	15
	dI4	Alarm polarity from input 4	Change type of digital input (NC o NO)	0	2	2			2	16
	dI5	Alarm polarity from input 5	Change type of digital input (NC o NO)	0	2	2			2	17
	dI6	Alarm polarity from input 6	Change type of digital input (NC o NO)	0	2	2			2	18
dI		Digital output Alarm and Warning							1	
	dO5	Polarity output Warning	Change type of digital input (NC o NO)	0	1	0			3	19
	dO6	Polarity output Alarm	Change type of digital input (NC o NO)	0	1	0			3	20
SIC		Safety probe							1	
	SIp	Selection of safety probe	Probe which also activates the relay Warning (ns. KTRS)	0	4	4			3	21
SyS		Syistem							0	
	dSA	display A output	Probe temperature or set-point to be displayed in the left display	0	8	1			3	22
	dSb	display B output	Probe temperature or set-point to be displayed in the right display	0	8	3			3	23
PAS		Password							1	
	PL1	Password level 1		0	9999	0			1	32
	PL2	Password level 2		0	9999				2	33
	PL3	Password level 3		0	9999				3	34

Menu	Parameter	Description	Additional description	Min	Max	Default	U.M.	Visibility condition	Level	Modbus index
tUN		Autotuning							3	
	tU1	Output temperature hysteresis	Don't modify it	0	50,0	0,5	°C		3	35
	tU2	Startup number	Don't modify it	0	5	2			3	36
	tU3	Measurement cycles number	Don't modify it	1	4	2			3	37
	tU4	Max. differential command exit	Don't modify it	0,01	10,00	10,00	V		3	38
	tU5	Differential reduction exit command (%)	Don't modify it	0	100	15			3	39
	tU6	Calculating mode: 0= Symmetrical; 1=Asymmetrical; 2=Simple	Don't modify it	0	2	2			3	40
	tU7	Enabling	Don't modify it	0	1	1			3	41

Submenu **REG – regulation parameters group :**

Menu	Parameter	Description	Additional description	Min	Max	Default	U.M.	Visibility condition	Level	Modbus index
REG		**REGULATION**							0	
Pb1		Probe 1							0	
	rES	Set-point Probe 1 (Tank resistor)	Don't modify it	-50,0	200,0	0,0	°C		3	42
	AL1	Probe 1 - Low Temperature Alarm Threshold	Don't modify it	-50,0	200,0	-50,0	°C		3	43
	AH1	Probe 1 - High Temperature Alarm Threshold	Don't modify it	-50,0	200,0	200,0	°C		3	44
	d01	Probe 1 differential		0,0	20,0	3,0	°C		3	45
Pb2		Probe 2							0	
	tCI	Set-point Probe 2 (Plant Consent)	Plant consent according to table "**Set point adjustment**"	-50,0	200,0	120,0	°C		0	46
	AL2	Probe 2 - Low Temperature Alarm Threshold	Don't modify it	-50,0	200,0	-50,0	°C		2	47
	AH2	Probe 2 - High Temperature Alarm Threshold	Don't modify it	-50,0	200,0	200,0	°C		2	48
	d02	Probe 2 differential		0,0	20,0	3,0	°C		2	49
Pb3		Probe 3							0	
	rE3	Type of regulation of probe 3 (Oil tank exit)	Type of regulation 0= thermostat; 1= PID (don't modify)	0	1	1			3	50
	OIL	Set-point Probe 3 (Oil tank exit)	Nozzle oil temperature according to the table "**Set point adjustment**"	-50,0	200,0	130,0	°C		0	51
	AL3	Probe 3 - Low Temperature Alarm Threshold (Oil tank exit)	Don't modify it	-50,0	200,0	-50,0	°C		2	52
	AH3	Probe 3 - High Temperature Alarm Threshold (Oil tank exit)	Don't modify it	-50,0	200,0	200,0	°C		2	53
	Pb3	Proportional band for PID Probe 3 (Oil tank exit)	Proportional band for first PID regulation	0,0	200,0	60,0			3	54
	db3	Dead Zone for PID Probe 3 (Oil tank exit)	Dead zone for first PID regulation	0,0	20,0	0,0	°C	rE3 =1	3	55
	rt3	Integral Time (Ti) for PID Probe 3 (Oil tank exit)	Integral time for first PID regulation	0,0	1000,0	120,0	s	rE3 =1	3	56
	dt3	DerivativeTime (Td) for PID Probe 3 (Oil tank exit)	Derivative time for first PID regulation (~ ¼ di rt3)	0,0	300,0	30,0	s	rE3 =1	3	57
	db3	Dead Zone for PID Probe 3 (Oil tank exit)	Dead zone for first PID regulation	0,0	20,0	0,0	°C	rE3 =1	3	55

Menu	Parameter	Description	Additional description	Min	Max	Default	U.M.	Visibility condition	Level	Modbus index
	pi1	Overshooting for Integral action (Oil tank exit)	Don't modify it	100	1000	200		rE3 =1	3	58
	pi2	Derivative action enabling (Oil tank exit)	Don't modify it	0	1	1		rE3 =1	3	59
	pi3	Filtering factor for derivative action (Oil tank exit)	Don't modify it	1	100	20		rE3 =1	3	60
	pi4	Duty cicle PWM for output DO3 and/or AO1 (0-10V)	Don't modify it	1	300	5	s	rE3 =1	3	61
	SL3	Output selection DO3 and/or AO1 (0-10V)	Digital selection output for control thyristors; Don't modify it	0	2	AO1			3	62
	p21	Proportional band for PID Probe 1 (Tank resistor)	Proportional band for second PID regulation	0,0	200,0	50,0		rE3 =1	3	63
	p22	Dead Zone for PID Probe 1 (Tank resistor)	Dead zone for second PID regulation	0,0	20,0	0,0	°C	rE3 =1	3	64
	p23	Integral Time (Ti) for PID Probe 1 (Tank resistor)	Integral time for second PID regulation	0,0	1000,0	110,0	s	rE3 =1	3	65
	p24	DerivativeTime (Td) for PID Probe 1 (Tank resistor)	Derivative time for second PID regulation	0,0	300,0	23,0	s	rE3 =1	3	66
	p25	Overshooting for Integral action (Tank resistor)	Don't modify it	100	1000	200		rE3 =1	3	67
	p26	Derivative action enabling (Tank resistor)	Don't modify it	0	1	1		rE3 =1	3	68
	p27	Filtering factor for derivative action (Tank resistor)	Don't modify it	1	100	20		rE3 =1	3	69
	p28	Min Output PID Probe 3 (Oil tank exit)	Minimum value tank resistor set-point (delta of 100°C above p29)	0,0	1000,0	80,0	°C	rE3 =1	3	70
	p29	Max Output PID Probe 3 (Oil tank exit)	Maximum valuetank resistor set-point	0,0	1000,0	180,0	°C	rE3 =1	3	71
	SP0	Set-point Tank Resistor with oil pump stops (stand by)	Set-point of maintaining resistance during stand by "**Set point adjustment**"	-50,0	200,0	140,0	°C	rE3 =1	0	72
Pb4		Probe 4							0	
	tcn	Setpoint Probe 4 (Oil consent)	Oil consent according table "**Set point adjustment**"	-50,0	200,0	110,0	°C		0	73
	AL4	Low Threshold Probe 4		-50,0	200,0	-50,0	°C		2	74
	trS	Probe 4 - High Temperature Alarm Threshold (Safety Thermostat)	Tank resistor safety temperature according table "**Set point adjustment**"	-50,0	200,0	190,0	°C		0	75
	d04	Probe 4 differential		0,0	20,0	3,0	°C		2	76

Alarms & Warning:
When the red triangle on the top left lights, one or more alarms are activated.
When the red key on the left lights, the output N05-C5 is active and the relay **KTRS** switches the resistors OFF.
Check the reason, correct the failure and, as soon as the temperature is lower than **trS**, reset it through **ALA**/**rES .**
In order to show active alarms and warnings, select the relevant menu through **ALA**/**Act**.and, using the **UP** and **DOWN** buttons, scroll the lines.
In order to perform the manual reset, select **ALA**/**rES**.

Code	Description	Sourse	Active simbol	Reset type
trS	High temperature resistors alarm	probe Pb4 > value trS	red key	Manual
EP1	Probe Pb1 fault	Probe Pb1 fault	red triangle	Automatic
EP2	Probe Pb2 fault	Probe Pb2 fault	red triangle	Automatic
EP3	Probe Pb3 fault	Probe Pb3 fault	red triangle	Automatic
EP4	Probe Pb4 fault	Probe Pb4 fault	red triangle	Automatic

Set point adjustment:

All the parameters inside the **Par** menu are locked by a password. The user can modify only set points, without using any passwords.
The oil viscosity at the nozzle, should be about 1,5°E, which guarantees correct and safe functioning of the burner.
The temperature values in the table, guarantee the respect of that parameter and are valid when the pre heating tank is installed on the burner. For different configurations , please refer to the chapter "Recommendations to design heavy oil feeding plants" on the burner manual
Here below recommended set points:

Menu path				Oil viscosity at 50 °C according to the letter shown in the burner model				
				P	**N**	**E**	**D**	**H**
				89 cSt	< 50 cSt	> 50 cSt < 110 cSt	> 110 cSt < 400 cSt	> 400 cSt < 4000 cSt
				12 °E	< 7°E	> 7 °E < 15 °E	> 15 °E < 50 °E	> 50 °E < 530 °E
Par								
rEG	Pb1	tr	Oil heater temperature probe	parameter not visible				
	Pb2	tCI	Plant consent temperature probe (when installed)	20 °C	70 °C	70 °C	70 °C	---
	Pb3	Oil	oil heater output temperature probe (PID regulation);	60-70 °C	110-120 °C	120-130 °C	130-140 °C	140-150 °C
		SP0	Set-point oil heater with oil pump stopped (stand-by)	45 °C	120 °C	130 °C	140 °C	150 °C
	Pb4	tcn	Oil heater consent temperature probe	40 °C	100 °C	100 °C	110 °C	120 °C
		trS	Safety temperature tank resistors (manual reset)	120 °C	190-200 °C	190-200 °C	190-200 °C	190-200 °C

The above temperature values are suggested and refer to a plant designed according to the prescriptions in the burner user manual.
The suggested values can change in reference to the fuel oil specifications.

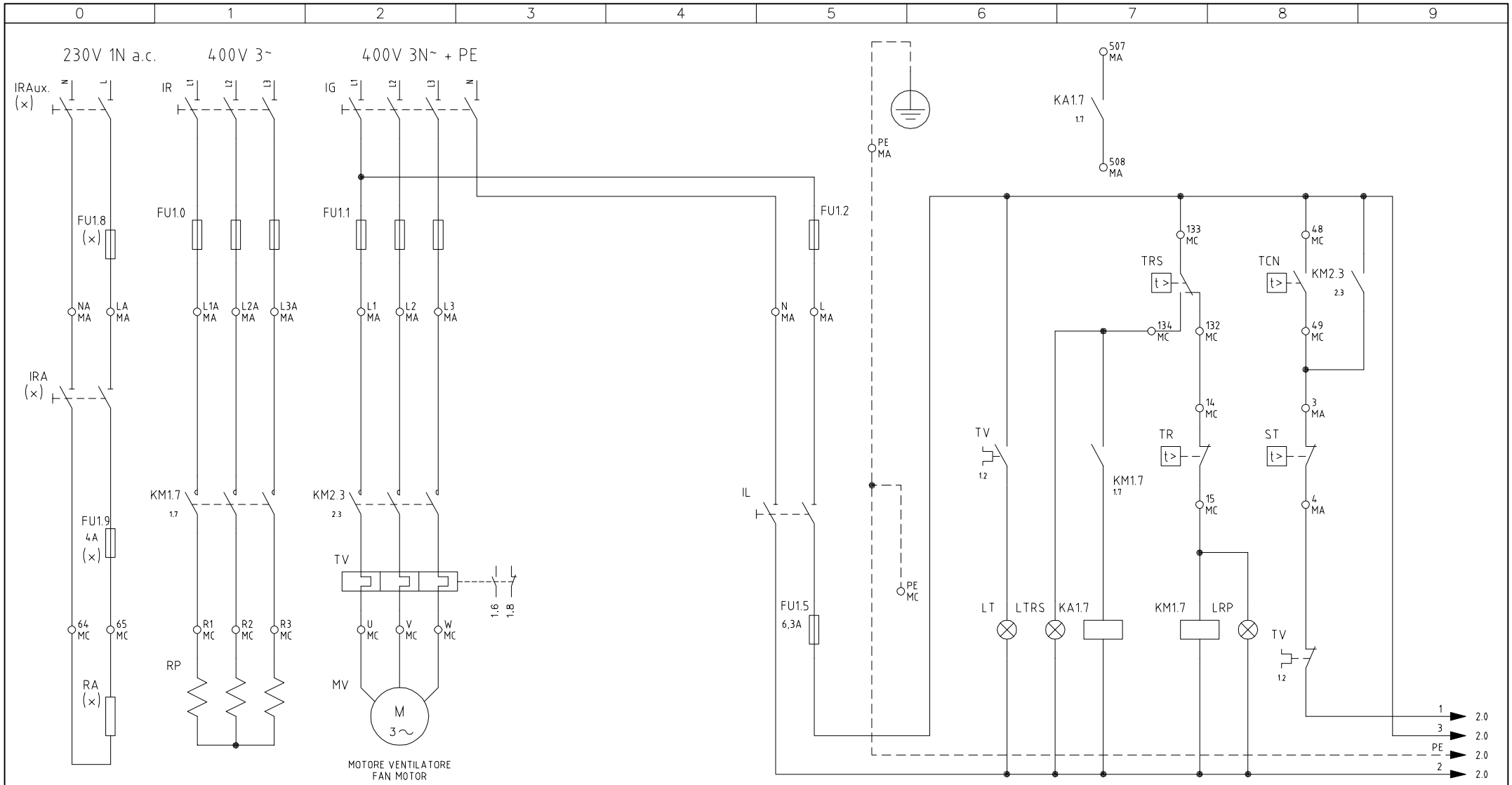

(x)
UTILIZZATO SOLO PER VERSIONI "NAFTA ECOLOGICA" E "NAFTA DENSA"
USED FOR "ECODEN" AND "HEAVY OIL" VERSIONS ONLY

REV.	MODIFICA	DATA	FIRME
04	AGGIUNTO/ADDED SQM40.265A	18/05/10	U. PINTON
03	AGGIUNTO/ADDED "KA1.7"	09/10/07	U. PINTON
02	AGGIUNTO/ADDED "IRA" & "F1.8"	27/01/04	U. PINTON
01	AGGIUNTO/ADDED SIEMENS LMO24	17/12/01	U. PINTON

UNIGAS

Impianto
TIPO/TYPE PN60
MODELLO/MODEL x–.PR.x.xx.A

Descrizione

Ordine

Commessa

Esecutore U. PINTON

Controllato S. MARCHETTI

Data Controllato 18/05/2010

Data 03/07/1997

Revisione 04

Dis. N. 05 – 558

PREC. /

FOGLIO 1

SEGUE 2

TOTALE 4

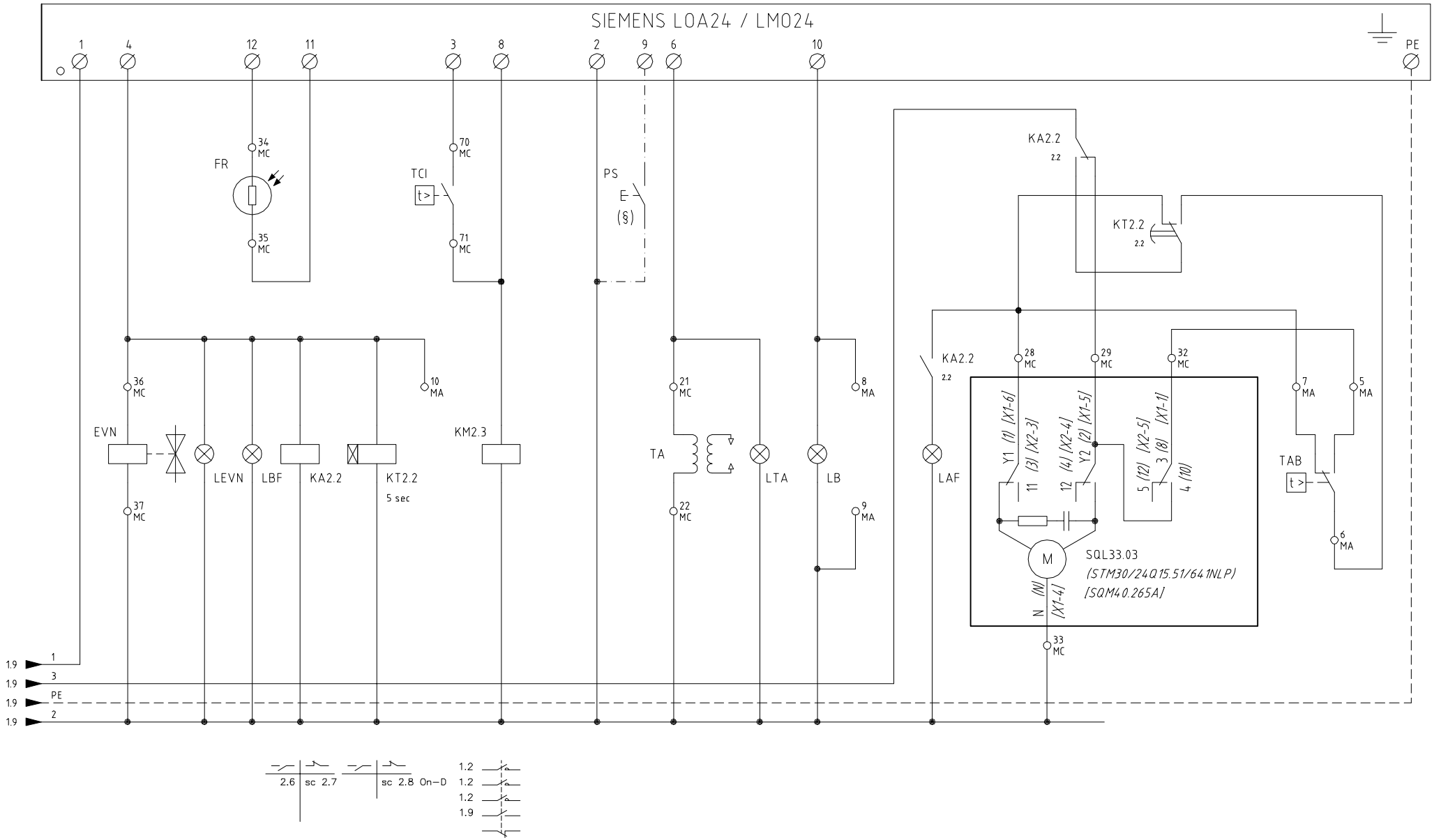

(§)
PULSANTE SBLOCCO FIAMMA (SOLO CON LMO24)
LOCK-OUT RESET BUTTON (LMO24 ONLY)

Data 03/07/1997		PREC.	FOGLIO
Revisione 04		1	2
Dis. N. 05 – 558		SEGUE	TOTALE
		3	4

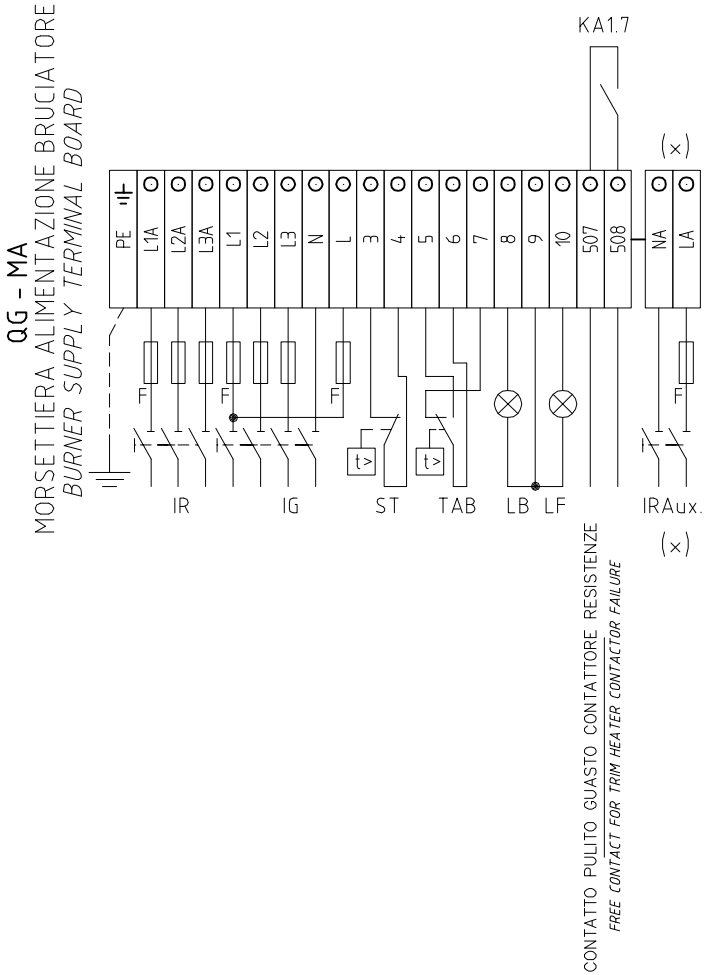

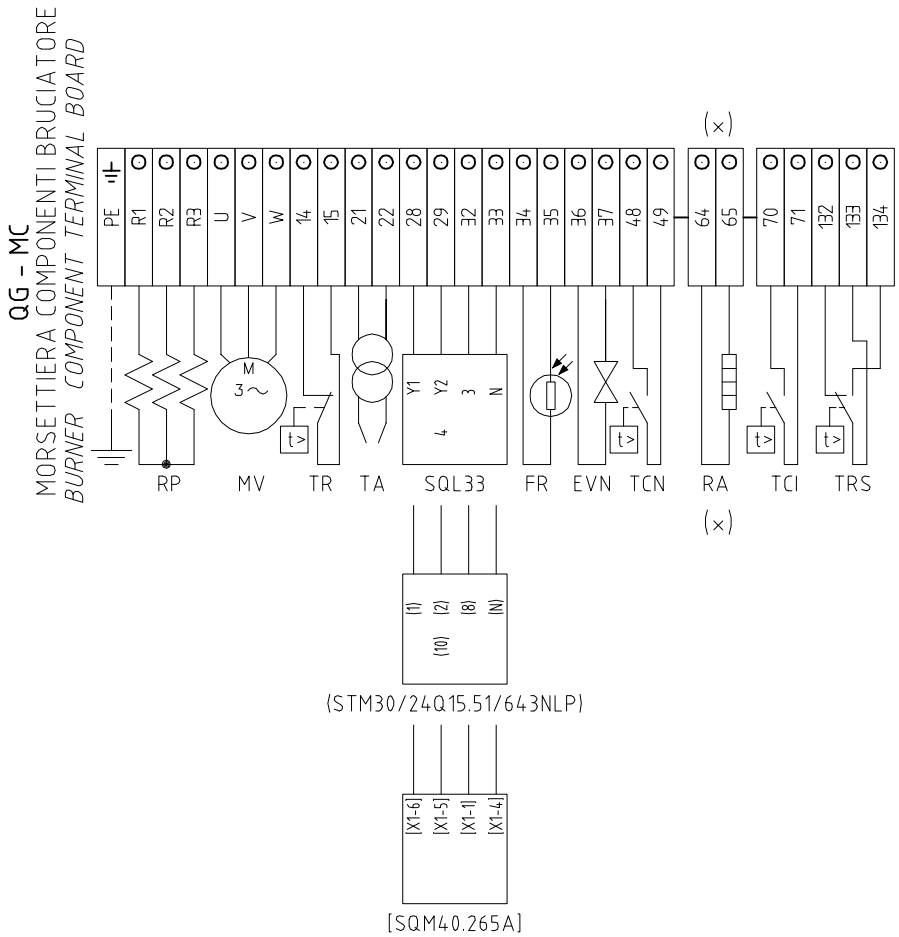

SERVOCOMANDO SERRANDA ARIA
AIR DAMPER ACTUATOR
SQL33

Y1	ALTA FIAMMA *HIGH FLAME*
Y2	SOSTA E ACCENSIONE *STAND-BY AND IGNITION*
3	BASSA FIAMMA *LOW FLAME*

SERVOCOMANDO SERRANDA ARIA (ALTERNATIVO)
AIR DAMPER ACTUATOR (ALTERNATIVE)
STM30/24Q15.51/641NLP

I	ALTA FIAMMA *HIGH FLAME*
II	SOSTA E ACCENSIONE *STAND-BY AND IGNITION*
III	BASSA FIAMMA *LOW FLAME*

SERVOCOMANDO SERRANDA ARIA (ALTERNATIVO)
AIR DAMPER ACTUATOR (ALTERNATIVE)
SQM40.265A

I	ALTA FIAMMA *HIGH FLAME*
II	SOSTA E ACCENSIONE *STAND-BY AND IGNITION*
III	BASSA FIAMMA *LOW FLAME*

(x)
UTILIZZATO SOLO PER VERSIONI "NAFTA ECOLOGICA" E "NAFTA DENSA"
USED FOR "ECODEN" AND "HEAVY OIL" VERSIONS ONLY

Data 03/07/1997		PREC.	FOGLIO
Revisione 04		2	3
Dis. N. 05 – 558		SEGUE	TOTALE
		4	4

	SIGLA/ITEM	FOGLIO/SHEET	FUNZIONE	FUNCTION
	(STM30/24Q15.51/641NLP)	2	SERVOCOMANDO SERRANDA ARIA (ALTERNATIVO)	AIR DAMPER ACTUATOR (ALTERNATIVE)
	[SQM40.265A]	2	SERVOCOMANDO SERRANDA ARIA (ALTERNATIVO)	AIR DAMPER ACTUATOR (ALTERNATIVE)
	EVN	2	ELETTROVALVOLA NAFTA	OIL SOLENOID VALVE
	FR	2	FOTORESISTENZA RILEVAZIONE FIAMMA	PHOTORESISTOR FLAME DETECTOR
	FU1.0	1	FUSIBILI LINEA PRERISCALDATORE RP	LINE PRE-HEATING RP FUSES
	FU1.1	1	FUSIBILI LINEA BRUCIATORE	BURNER LINE FUSES
	FU1.2	1	FUSIBILE LINEA AUSILIARI	AUXILIARY LINE FUSE
	FU1.5	1	FUSIBILE AUSILIARIO	AUXILIARY FUSE
(x)	FU1.8	1	FUSIBILE LINEA RESISTENZE AUSILIARIE	LINE AUXILIARY RESISTORS FUSE
(x)	FU1.9	1	FUSIBILE RESISTENZE AUSILIARIE	AUXILIARY RESISTORS FUSE
	IG	1	INTERRUTTORE GENERALE	MAINS SWITCH
	IL	1	INTERRUTTORE LINEA AUSILIARI	AUXILIARY LINE SWITCH
	IR	1	INTERRUTTORE LINEA RESISTENZE PRERISCALDATORE	PRE-HEATING RESISTORS LINE SWITCH
(x)	IRA	1	INTERRUTTORE RESISTENZE AUSILIARIE	AUXILIARY RESISTORS SWITCH
(x)	IRAux.	1	INTERRUTTORE RESISTENZE AUSILIARIE	AUXILIARY RESISTORS SWITCH
	KA1.7	1	RELE' AUSILIARIO SEGNALAZIONE GUASTO CONTATTORE RESISTENZE	AUXILIARY RELAY FOR TRIM HEATER CONTACTOR FAILURE
	KA2.2	2	RELE' AUSILIARIO	AUXILIARY RELAY
	KM1.7	1	CONTATTORE RESISTENZE PRERISCALDATORE [RP]	PRE-HEATING RESISTORS [RP] CONTACTOR
	KM2.3	2	CONTATTORE MOTORE VENTILATORE	FAN MOTOR CONTACTOR
	KT2.2	2	RELE' TEMPORIZZATORE	DELAYED RELAY
	LAF	2	LAMPADA SEGNALAZIONE ALTA FIAMMA BRUCIATORE	BURNER IN HIGH FLAME INDICATOR LIGHT
	LB	2	LAMPADA SEGNALAZIONE BLOCCO BRUCIATORE	INDICATOR LIGHT FOR BURNER LOCK-OUT
	LBF	2	LAMPADA SEGNALAZIONE BASSA FIAMMA BRUCIATORE	BURNER IN LOW FLAME INDICATOR LIGHT
	LEVN	2	LAMPADA SEGNALAZIONE APERTURA [EVN]	INDICATOR LIGHT FOR OPENING OF ELECTRO-VALVE [EVN]
	LRP	1	LAMPADA SEGNALAZIONE FUNZIONAMENTO PRERISCALDATORE RP	INDICATOR LIGHT FOR PRE-HEATING RESISTOR RP OPERATION
	LT	1	LAMPADA SEGNALAZIONE BLOCCO TERMICO MOTORE VENTILATORE	INDICATOR LIGHT FOR FAN OVERLOAD TRIPPED
	LTA	2	LAMPADA SEGNALAZIONE TRASFORMATORE DI ACCENSIONE	IGNITION TRANSFORMER INDICATOR LIGHT
	LTRS	1	LAMPADA SEGNALAZIONE BLOCCO TERMOSTATO DI SICUREZZA PRERISCALDATORE [RP]	INDICATOR LIGHT FOR SAFETY THERMOSTAT [RP] PRE-HEATING
	MV	1	MOTORE VENTILATORE	FAN MOTOR
	PS	2	PULSANTE SBLOCCO FIAMMA (SOLO CON LMO24)	LOCK-OUT RESET BUTTON (LMO24 ONLY)
(x)	RA	1	RESISTENZE AUSILIARIE	AUXILIARY RESISTORS
	RP	1	RESISTENZE PRERISCALDATORE NAFTA	PRE-HEATING TANK RESISTORS
	SIEMENS LOA24 / LMO24	2	APPARECCHIATURA CONTROLLO FIAMMA	CONTROL BOX
	SQL33.03	2	SERVOCOMANDO SERRANDA ARIA	AIR DAMPER ACTUATOR
	ST	1	SERIE TERMOSTATI/PRESSOSTATI	SERIES OF THERMOSTATS OR PRESSURE SWITCHES
	TA	2	TRASFORMATORE DI ACCENSIONE	IGNITION TRANSFORMER
	TAB	2	TERMOSTATO/PRESSOSTATO ALTA-BASSA FIAMMA	HIGH-LOW THERMOSTAT/PRESSURE SWITCHES
	TCI	2	TERMOSTATO CONSENSO IMPIANTO	PLANT CONSENT THERMOSTAT
	TCN	1	TERMOSTATO CONSENSO NAFTA	OIL ENABLING THERMOSTAT
	TR	1	TERMOSTATO DI REGOLAZIONE PRERISCALDATORE [RP]	REGULATION THERMOSTAT FOR PRE-HEATING [RP] RESISTORS
	TRS	1	TERMOSTATO DI SICUREZZA PRERISCALDATORE [RP]	PRE-HEATING [RP] A SAFETY THERMOSTAT
	TV	1	TERMICO MOTORE VENTILATORE	FAN MOTOR THERMAL

(x)
UTILIZZATO SOLO PER VERSIONI "NAFTA ECOLOGICA" E "NAFTA DENSA"
USED FOR "ECODEN" AND "HEAVY OIL" VERSIONS ONLY

Data 03/07/1997		PREC.	FOGLIO
Revisione 04		3	4
Dis. N. 05 – 558		SEGUE	TOTALE
		/	4