PN30
PN60 - PN70
PN81 - PN91 - PN92

Double-stage
Heavy oil Burners

MANUAL OF INSTALLATION - USE - MAINTENANCE

CIB UNIGAS

BURNERS - BRUCIATORI - BRULERS - BRENNER - QUEMADORES - ГОРЕЛКИ

M03973CF Rel.5.2 07/2011

WARNINGS

THIS MANUAL IS SUPPLIED AS AN INTEGRAL AND ESSENTIAL PART OF THE PRODUCT AND MUST BE DELIVERED TO THE USER.

INFORMATION INCLUDED IN THIS SECTION ARE DEDICATED BOTH TO THE USER AND TO PERSONNEL FOLLOWING PRODUCT INSTALLATION AND MAINTENANCE.

THE USER WILL FIND FURTHER INFORMATION ABOUT OPERATING AND USE RESTRICTIONS, IN THE SECOND SECTION OF THIS MANUAL. WE HIGHLY RECOMMEND TO READ IT.

CAREFULLY KEEP THIS MANUAL FOR FUTURE REFERENCE.

1) GENERAL INTRODUCTION

- The equipment must be installed in compliance with the regulations in force, following the manufacturer's instructions, by qualified personnel.
- Qualified personnel means those having technical knowledge in the field of components for civil or industrial heating systems, sanitary hot water generation and particularly service centres authorised by the manufacturer.
- Improper installation may cause injury to people and animals, or damage to property, for which the manufacturer cannot be held liable.
- Remove all packaging material and inspect the equipment for integrity.

In case of any doubt, do not use the unit - contact the supplier.

The packaging materials (wooden crate, nails, fastening devices, plastic bags, foamed polystyrene, etc), should not be left within the reach of children, as they may prove harmful.

- Before any cleaning or servicing operation, disconnect the unit from the mains by turning the master switch OFF, and/or through the cut-out devices that are provided.
- Make sure that inlet or exhaust grilles are unobstructed.
- In case of breakdown and/or defective unit operation, disconnect the unit. Make no attempt to repair the unit or take any direct action.

Contact qualified personnel only.

Units shall be repaired exclusively by a servicing centre, duly authorised by the manufacturer, with original spare parts.

Failure to comply with the above instructions is likely to impair the unit's safety.

To ensure equipment efficiency and proper operation, it is essential that maintenance operations are performed by qualified personnel at regular intervals, following the manufacturer's instructions.

- When a decision is made to discontinue the use of the equipment, those parts likely to constitute sources of danger shall be made harmless.
- In case the equipment is to be sold or transferred to another user, or in case the original user should move and leave the unit behind, make sure that these instructions accompany the equipment at all times so that they can be consulted by the new owner and/or the installer.
- For all the units that have been modified or have options fitted then original accessory equipment only shall be used.
- This unit shall be employed exclusively for the use for which it is meant. Any other use shall be considered as improper and, therefore, dangerous.

The manufacturer shall not be held liable, by agreement or otherwise, for damages resulting from improper installation, use and failure to comply with the instructions supplied by the manufacturer.

2) SPECIAL INSTRUCTIONS FOR BURNERS

- The burner should be installed in a suitable room, with ventilation openings complying with the requirements of the regulations in force, and sufficient for good combustion.
- Only burners designed according to the regulations in force should be used.
- This burner should be employed exclusively for the use for which it was designed.
- Before connecting the burner, make sure that the unit rating is the same as delivery mains (electricity, gas oil, or other fuel).
- Observe caution with hot burner components. These are, usually, near to the flame and the fuel pre-heating system, they become hot during the unit operation and will remain hot for some time after the burner has stopped.

When the decision is made to discontinue the use of the burner, the user shall have qualified personnel carry out the following operations:

a) Remove the power supply by disconnecting the power cord from the mains.

b) Disconnect the fuel supply by means of the hand-operated shut-off valve and remove the control handwheels from their spindles.

SPECIAL WARNINGS

- Make sure that the burner has, on installation, been firmly secured to the appliance, so that the flame is generated inside the appliance firebox.
- Before the burner is started and, thereafter, at least once a year, have qualified personnel perform the following operations:

a) set the burner fuel flow rate depending on the heat input of the appliance;

b) set the flow rate of the combustion-supporting air to obtain a combustion efficiency level at least equal to the lower level required by the regulations in force;

c) check the unit operation for proper combustion, to avoid any harmful or polluting unburnt gases in excess of the limits permitted by the regulations in force;

d) make sure that control and safety devices are operating properly;

e) make sure that exhaust ducts intended to discharge the products of combustion are operating properly;

f) on completion of setting and adjustment operations, make sure that all mechanical locking devices of controls have been duly tightened;

g) make sure that a copy of the burner use and maintenance instructions is available in the boiler room.

- In case of a burner shut-down, reser the control box by means of the RESET pushbutton. If a second shut-down takes place, call the Technical Service, without trying to RESET further.
- The unit shall be operated and serviced by qualified personnel only, in compliance with the regulations in force.

3) GENERAL INSTRUCTIONS DEPENDING ON FUEL USED

3a) ELECTRICAL CONNECTION

- For safety reasons the unit must be efficiently earthed and installed as required by current safety regulations.
- It is vital that all saftey requirements are met. In case of any doubt, ask for an accurate inspection of electrics by qualified personnel, since the manufacturer cannot be held liable for damages that may be caused by failure to correctly earth the equipment.
- Qualified personnel must inspect the system to make sure that it is adequate to take the maximum power used by the equipment shown on the equipment rating plate. In particular, make sure that the system cable cross section is adequate for the power absorbed by the unit.
- No adaptors, multiple outlet sockets and/or extension cables are permitted to connect the unit to the electric mains.
- An omnipolar switch shall be provided for connection to mains, as required by the current safety regulations.
- The use of any power-operated component implies observance of a few basic rules, for example:

- do not touch the unit with wet or damp parts of the body and/or with bare feet;

- do not pull electric cables;

- do not leave the equipment exposed to weather (rain, sun, etc.) unless expressly required to do so;

- do not allow children or inexperienced persons to use equipment;

- The unit input cable shall not be replaced by the user.
  In case of damage to the cable, switch off the unit and contact qualified personnel to replace.

When the unit is out of use for some time the electric switch supplying all the power-driven components in the system (i.e. pumps, burner, etc.) should be switched off.

3b) FIRING WITH GAS, LIGHT OIL OR OTHER FUELS
GENERAL

- The burner shall be installed by qualified personnel and in compliance with regulations and provisions in force; wrong installation can cause injuries to people and animals, or damage to property, for which the manufacturer cannot be held liable.
- Before installation, it is recommended that all the fuel supply system pipes be carefully cleaned inside, to remove foreign matter that might impair the burner operation.
- Before the burner is commissioned, qualified personnel should inspect the following:

a) the fuel supply system, for proper sealing;
b) the fuel flow rate, to make sure that it has been set based on the firing rate required of the burner;
c) the burner firing system, to make sure that it is supplied for the designed fuel type;
d) the fuel supply pressure, to make sure that it is included in the range shown on the rating plate;
e) the fuel supply system, to make sure that the system dimensions are adequate to the burner firing rate, and that the system is equipped with all the safety and control devices required by the regulations in force.

- When the burner is to remain idle for some time, the fuel supply tap or taps should be closed.

SPECIAL INSTRUCTIONS FOR USING GAS

Have qualified personnel inspect the installation to ensure that:
a) the gas delivery line and train are in compliance with the regulations and provisions in force;
b) all gas connections are tight;
c) the boiler room ventilation openings are such that they ensure the air supply flow required by the current regulations, and in any case are sufficient for proper combustion.

- Do not use gas pipes to earth electrical equipment.
- Never leave the burner connected when not in use. Always shut the gas valve off.
- In case of prolonged absence of the user, the main gas delivery valve to the burner should be shut off.

Precautions if you can smell gas

a) do not operate electric switches, the telephone, or any other item likely to generate sparks;
b) immediately open doors and windows to create an air flow to purge the room;
c) close the gas valves;
d) contact qualified personnel.

- Do not obstruct the ventilation openings of the room where gas appliances are installed, to avoid dangerous conditions such as the development of toxic or explosive mixtures.

DIRECTIVES AND STANDARDS

Gas burners

European directives:
- Directive 2009/142/EC - Gas Appliances;
- Directive 2006/95/EC on low voltage;
- Directive 2004/108/EC on electromagnetic compatibility

Harmonised standards :
-UNI EN 676 (Gas Burners;
-CEI EN 60335-1 (Household and similar electrical appliances - Safety. Part 1: General requirements;
- EN 50165 (Electrical equipment of non-electric appliances for household and similar purposes. Safety requirements.

Light oil burners

European directives:
- Directive 2006/95/EC on low voltage;
- Directive 2004/108/EC on electromagnetic compatibility

Harmonised standards :
-CEI EN 60335-1 (Household and similar electrical appliances - Safety. Part 1: General requirements;
- EN 50165 (Electrical equipment of non-electric appliances for household and similar purposes. Safety requirements.

National standards :
-UNI 7824: Monobloc nebulizer burners for liquid fuels. Characteristics and test methods

Heavy oil burners

European directives:
- Directive 2006/95/EC on low voltage;
- Directive 2004/108/EC on electromagnetic compatibility

Harmonised standards :
-CEI EN 60335-1 Household and similar electrical appliances - SafetyPart 1: General requirements;
- EN 50165 Electrical equipment of non-electric appliances for household and similar purposes. Safety requirements.

National standards :
-UNI 7824: Monobloc nebulizer burners for liquid fuels. Characteristics and test methods

Gas - Light oil burners

European directives:
- Directive 2009/142/EC - Gas Appliances;
- Directive 2006/95/EC on low voltage;
- Directive 2004/108/EC on electromagnetic compatibility

Harmonised standards :
-UNI EN 676 Gas Burners
-CEI EN 60335-1 (Household and similar electrical appliances - Safety. Part 1: General requirements;
- EN 50165 Electrical equipment of non-electric appliances for household and similar purposes. Safety requirements.

National standards :
-UNI 7824: Monobloc nebulizer burners for liquid fuels. Characteristics and test methods

Gas - Heavy oil burners

European directives:
- Directive 2009/142/EC - Gas Appliances;
- Directive 2006/95/EC on low voltage;
- Directive 2004/108/EC on electromagnetic compatibility

Harmonised standards :
-UNI EN 676 (Gas Burners;
-CEI EN 60335-1 (Household and similar electrical appliances - Safety. Part 1: General requirements;
- EN 50165 Electrical equipment of non-electric appliances for household and similar purposes. Safety requirements.

National standards :
-UNI 7824: Monobloc nebulizer burners for liquid fuels. Characteristics and test methods.

PART I: INSTALLATION

Burner model identification

Burners are identified by burner type and model. Burner model identification is described as follows.

Type PN70 **Model** N-. AB. S. *. A. (1) (2) (3) (4) (5) (6)	
(1) BURNER TYPE	PN30-PN60-PN70-PN81-PN91-PN92
(2) FUEL TYPE	N - Heavy oil, viscosity ≤ 50cSt (7° E) @ 50° C E - Heavy oil, viscosity ≤ 110cSt (15°E) @ 50° C D - Heavy oil, viscosity ≤ 400cSt (50° E) @ 50° C P - Petroleum, viscosity 89cSt (12° E) @ 50° C
(3) OPERATION	AB - Double stage
(4) BLAST TUBE	S – Standard L – Extended
(5) DESTINATION COUNTRY	* - see data plate
(6) SPECIAL VERSION	A - Standard

Specifications

BURNER TYPE		**PN30**	**PN60**	**PN70**	**PN81**	**PN91**	**PN92**
Output	min-max kW	105-383	145-698	291-1047	264-1900	1047-2093	849 - 2558
Fuel		Heavy oil					
Viscosity		See “Burner model identification” table					
Heavy oil rate	min-max kg/h	9-33	12.5-60	25-90	23.5-169	93-187	76- 228
Oil train inlet pressure (viscosity ≤ 50 cSt (7 °E) @ 50 °C)	bar	1.5max					
Oil train inlet pressure (viscosity ≤ 400 cSt (50 °E) @ 50 °C)	bar	3.5max					
Power supply		230/400V 50Hz					
Electric motor	kW	0.75	1.1	2.2	3	4	5.5
Pre-heater resistors (heavy oil)	kW	2.4	4.5	8	12	18	18
Pre-heater resistors (petroleum)	kW	2.4	1.5	2.7	4	6	6
Total power consumption (Heavy oil)	kW	3.65	6.1	10.7	15.5	22.5	24
Total power consumption (petroleum)	kW	3.65	3.1	5.4	7.5	10.5	12
Approx. weight	kg	60	90	110	130	190	230
Operation		Double-stage					
Operating temperature	°C	-10 ÷ +50					
Storage temperature	°C	-20 ÷ +60					
Working service *		Intermittent					

Heavy oil net calorific value (Hi): 40.4 kcal/kg (average value)

***. NOTE ON THE BURNER WORKING SERVICE:**

- Burners provided with Siemens LOA24 control box: for safety reasons, one controlled shutdown must take place every 24 hours.
- Burners provided with Siemens LMO24-44 control box: the control box automatically stops after 24h of continuous working. The control box immediately starts up, automatically.

Overall dimensions (mm)

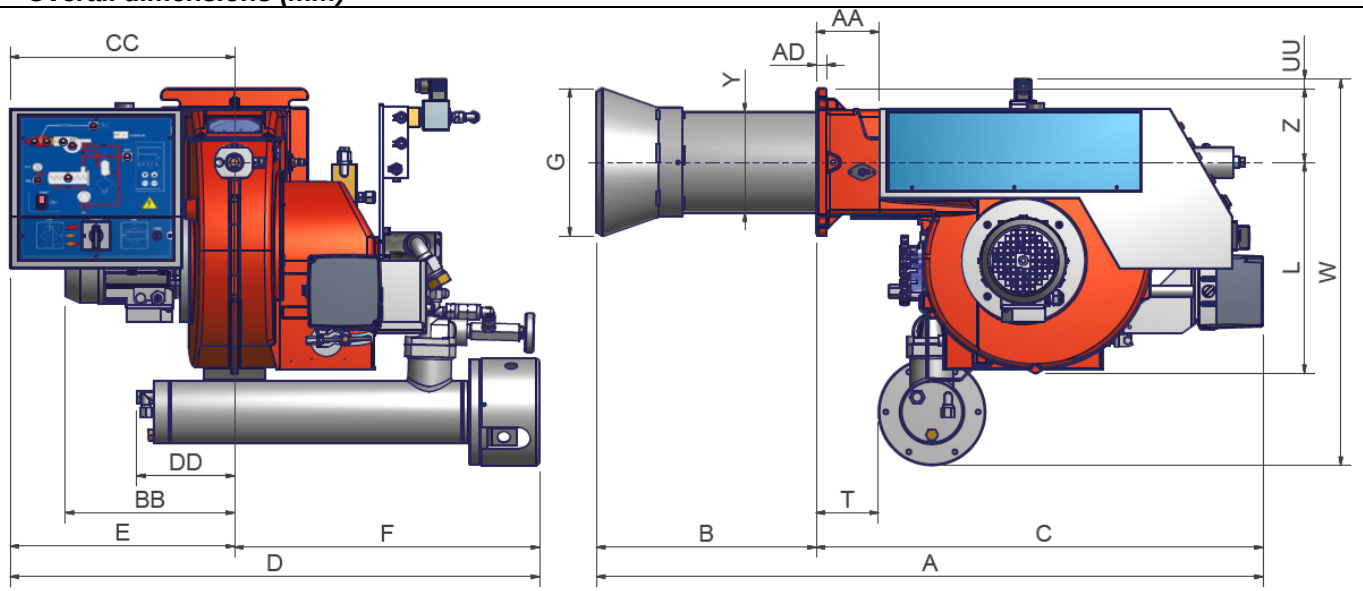

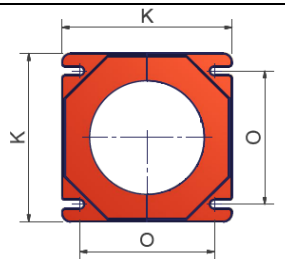

Burner flange

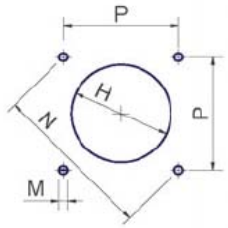

Boiler recommended drilling template

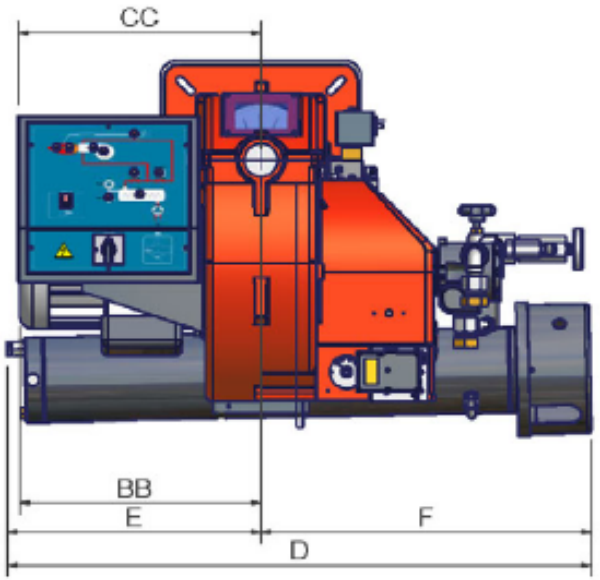

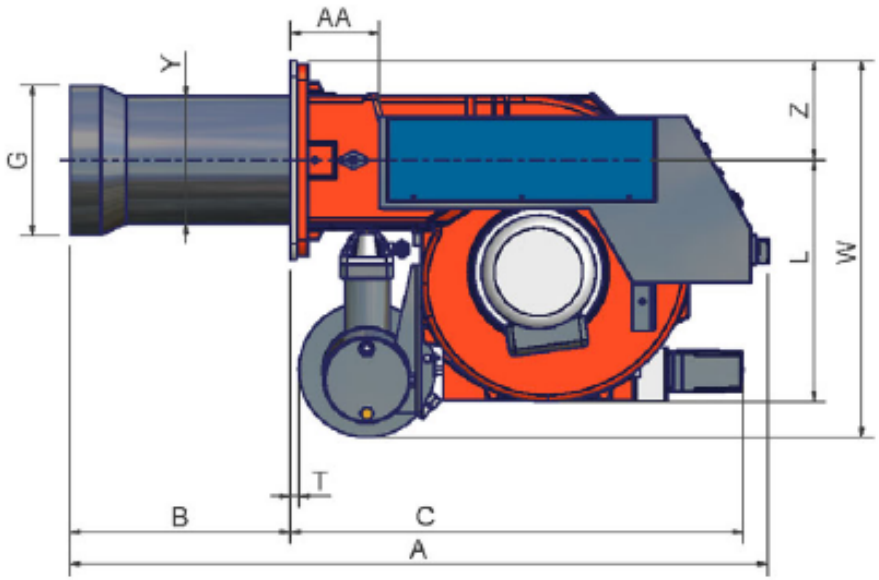

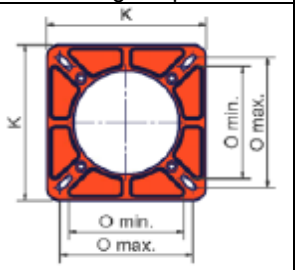

Burner flange

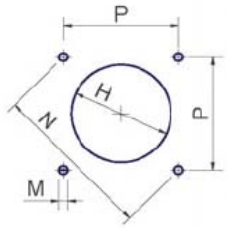

Boiler recommended drilling template

	AS*	AL*	AA	BS*	BL*	BB	C	CC	D	DD	E	F	G	H	K	L	M	N	O - min	O - max	P	T	W	Y	Z
PN30	670	860	x	150	340	x	520	x	720		270	450	121	151	190	400	M10	219	155	155	x	x	x	131	x
PN60	864	1062	102	244	442	274	620	365	660	159	330	330	153	182	240	400	M10	269	190	190	190	92	520	162	120
PN70	1106	1256	138	407	557	373	699	376	871	x	360	511	220	250	300	475	M10	330	216	250	233	14	630	198	155
PN81	1080	1230	138	340	490	373	699	376	903	392	392	511	234	264	300	376	M10	330	216	250	233	14	587	198	155
PN91	1315	1505	157	298	488	419	918	532	1052	356	532	520	262	292	360	464	M12	417	280	310	295	45	722	228	185
PN92	1318	1508	157	301	491	419	918	532	1052	356	532	520	292	322	360	464	M12	417	280	310	295	45	722	228	185

*AS/BS = measure referred to burners provided with standard blast tube
*AL/BL = measure referred to burners provided with extended blast tube

Performance curves

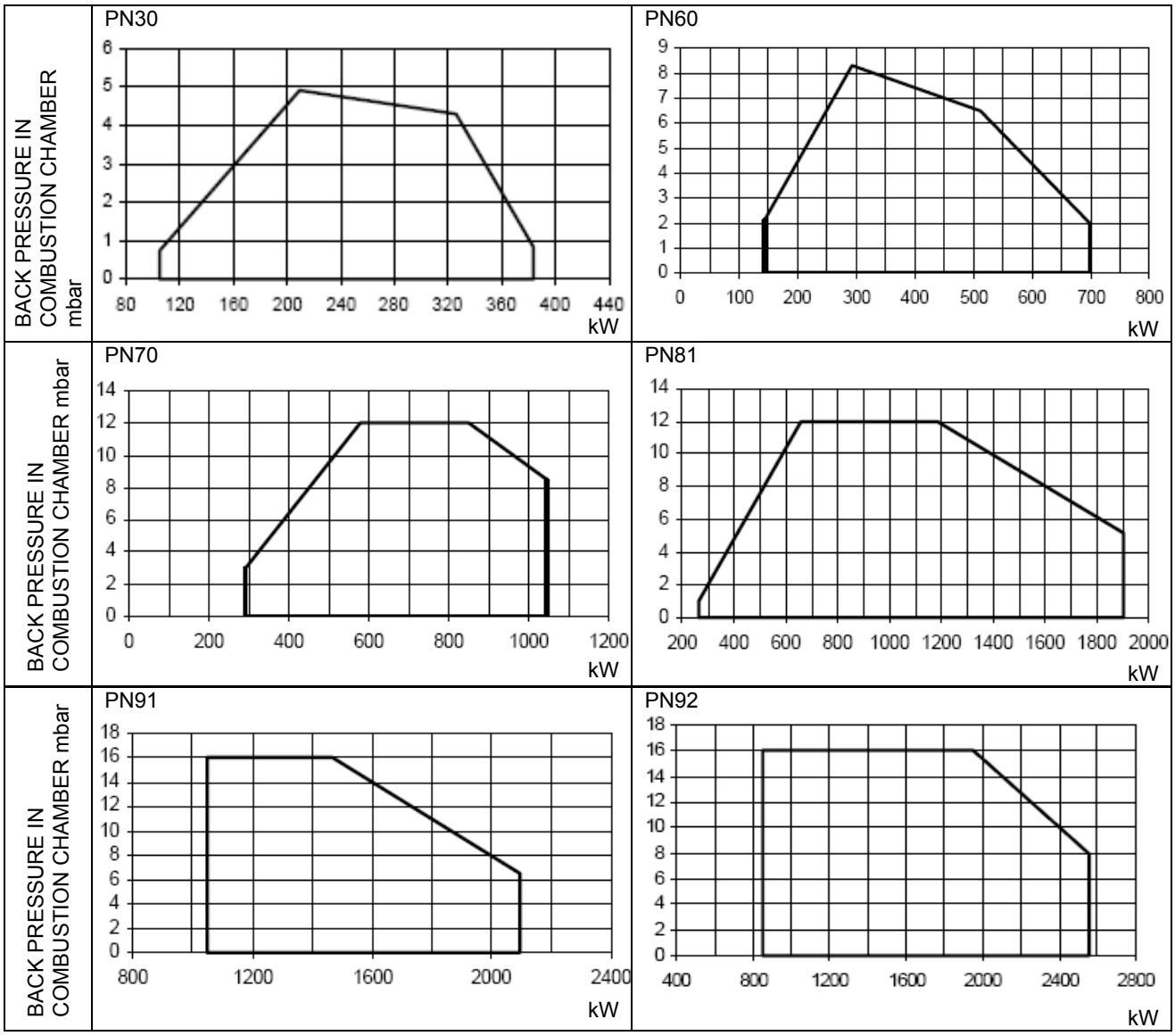

To get the input in kcal/h, multiply value in kW by 860.
Data are referred to standard conditions: atmospheric pressure at 1013mbar, ambient temperature at 15°C.

NOTE: The performance curve is a diagram that represents the burner performance in the type approval phase or in the laboratory tests, but does not represent the regulation range of the machine. On this diagram the maximum output point is usually reached by adjsuting the combustion head to its “MAX” position (see paragraph “Adjusting the combustion head”); the minimum output point is reached setting the combustion head to its “MIN” position. During the first ignition, the combustion head is set in order to find a compromise between the burner output and the generator specifications, that is why the minimum output may be different from the Performance curve minimum.

MOUNTING AND CONNECTIONS

Packages

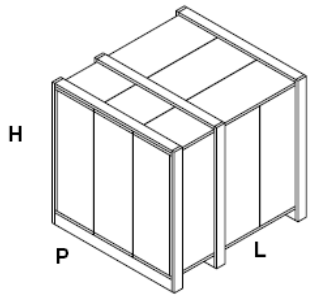

Burners are despatched in wooden packages, whose dimensions are:
PN30: 1180 x 930 x 720 mm (L x P x H)
PN60: 1210 x 1020 x 790 mm (L x P x H)
PN70/81: 1580 x 1010 x 860 mm (L x P x H)
PN91/92: 1730 x 1280 x 1020 mm (L x P x H)
Packing cases of this type are affected by humidity and are not suitable for stacking.
The following are placed in each packing case::

- burner;
- flexible hoses;
- filter;
- gasket to be inserted between the burner and the boiler;
- this manual.

When disposing of the burner packing and if the packing is scrapped follow the procedures laid down in the current legislation regarding the disposal of materials.

Handling the burner

⚠	**WARNING!** The lhandling operations must be carried out by specialised and trained personnel. If these operations are not carried out correctly, the residual risk for the burner to overturn and fall down still persists.
	To move the burner, use means suitable to support its weight (see paragraph “Technical specifications”). The unpacked burner must be lifted and moved only by means of a fork lift truck.

The burner is mounted on a stirrup provided for handling the burner by means of a fork lift truck: the forks must be inserted into the A anb B ways. Remove the stirrup only once the burner is installed to the boiler.

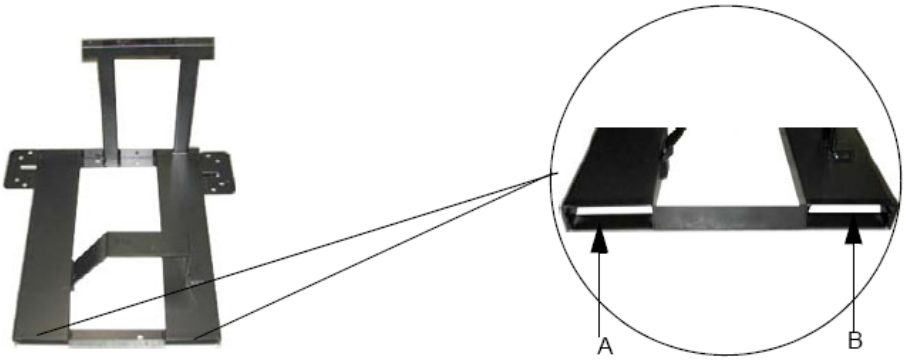

The burner is designed to work positioned according to the picture below. Set the upper side of the burner flange in a horizontal position, in order to find the correct inclination of the pre-heating tank. For different installations, please contact the Technical Department.

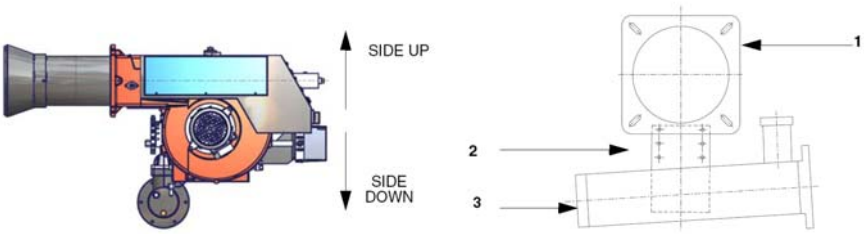

Key
1 Burner flange (upper side indicated)
2 Bracket
3 Pre-heating tank on the burner

Fitting the burner to the boiler

To install the burner into the boiler, proceed as follows:

1. make a hole on the closing door of the combustion chamber as described on paragraph “Overall dimensions”)
2. place the burner to the boiler: lift it up and handle it according to the procedure described on paragraph “Handling the burner”;
3. place the 4 stud bolts (5) on boiler’s door, according to the burner drilling template described on paragraph “Overall dimensions”;
4. fasten the 4 stud bolts;
5. place the gasket on the burner flange;
6. install the burner into the boiler;
7. fix the burner to the stud bolts, by means of the fixing nuts, according to the next picture.
8. After fitting the burner to the boiler, ensure that the gap between the blast tube and the refractory lining is sealed with appropriate insulating material (ceramic fibre cord or refractory cement)..

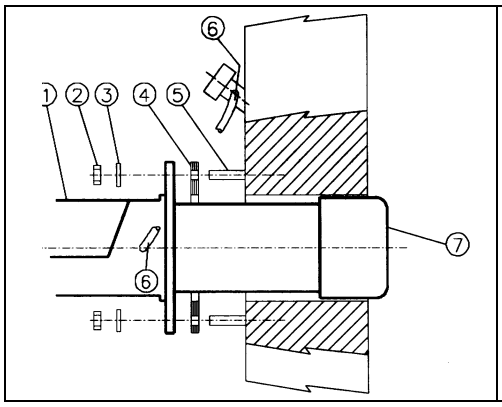

Keys

1. Burner
2. Fixing nut
3. Washer
4. Sealing gasket
5. Stud bolt
7. Blast tube

Once the burner is installed, execute the electrical and hydraulic connections, according to the schemes showed in the next paragraphs.

Matching the burner to the boiler

The burners described in this manual have been tested with combustion chambers that comply with EN267 regulation and whose dimensions are described in the diagram . In case the burner must be coupled with boilers with a combustion chamber smaller in diameter or shorter than those described in the diagram, please contact the supplier, to verify that a correct matching is possible, with respect of the application involved. To correctly match the burner to the boiler verify the necessary input and the pressure in combustion chamber are included in the burner performance curve; otherwise the choice of the burner must be revised consulting the burner manufacturer. To choose the blast tube lenght follow the instructions of the boiler manufacturer. In absence of these consider the following:

- Cast-iron boilers, three pass flue boilers (with the first pass in the rear part): the blast tube must protrude no more than 100 mm (values between 0 and 100mm) into the combustion chamber.
- Pressurised boilers with flame reversal: in this case the blast tube must penetrate at least 50 - 100 mm into combustion chamber in respect to the tube bundle plate.

The length of the blast tubes does not always allow this requirement to be met, and thus it may be necessary to use a suitably-sized spacer to move the burner backwards or to design a blast tube tha suites the utilisation (please, contact the manifacturer).

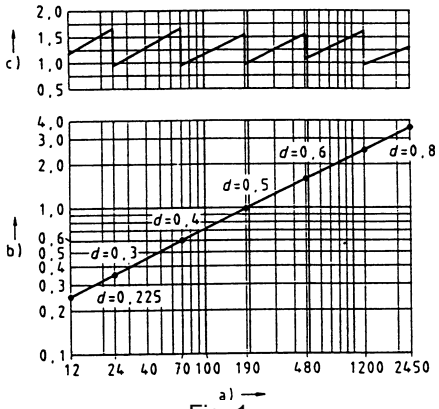

Fig. 1

Keys

a) Heat output in kW

b) Length of the flame tube in meters

c) Flame tube firing intensity in MW/m3

d) Combustion chamber diameter (m)

Fig.1:Firing intensity, diameter and lenght of the test flame tube as a function of the heat input in kW.

HYDRAULIC DIAGRAMS

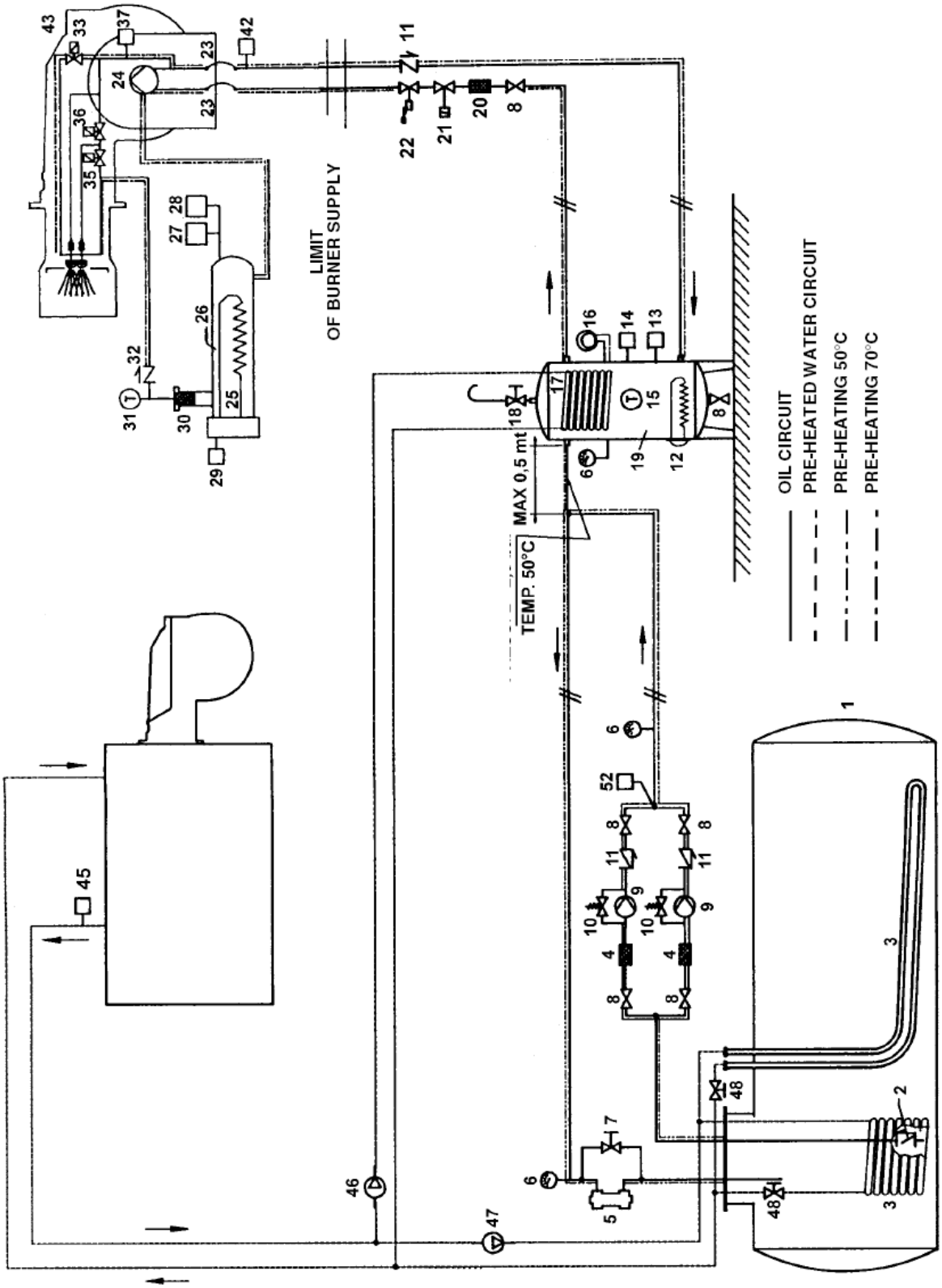

Fig. 2 - 3ID0010 – Hydraulic diagram 3ID0010 - Single burner configuration

* If the heavy oil used is up to 7° E a 50° C (model N-.), the pressure must be 1.5mbar max.

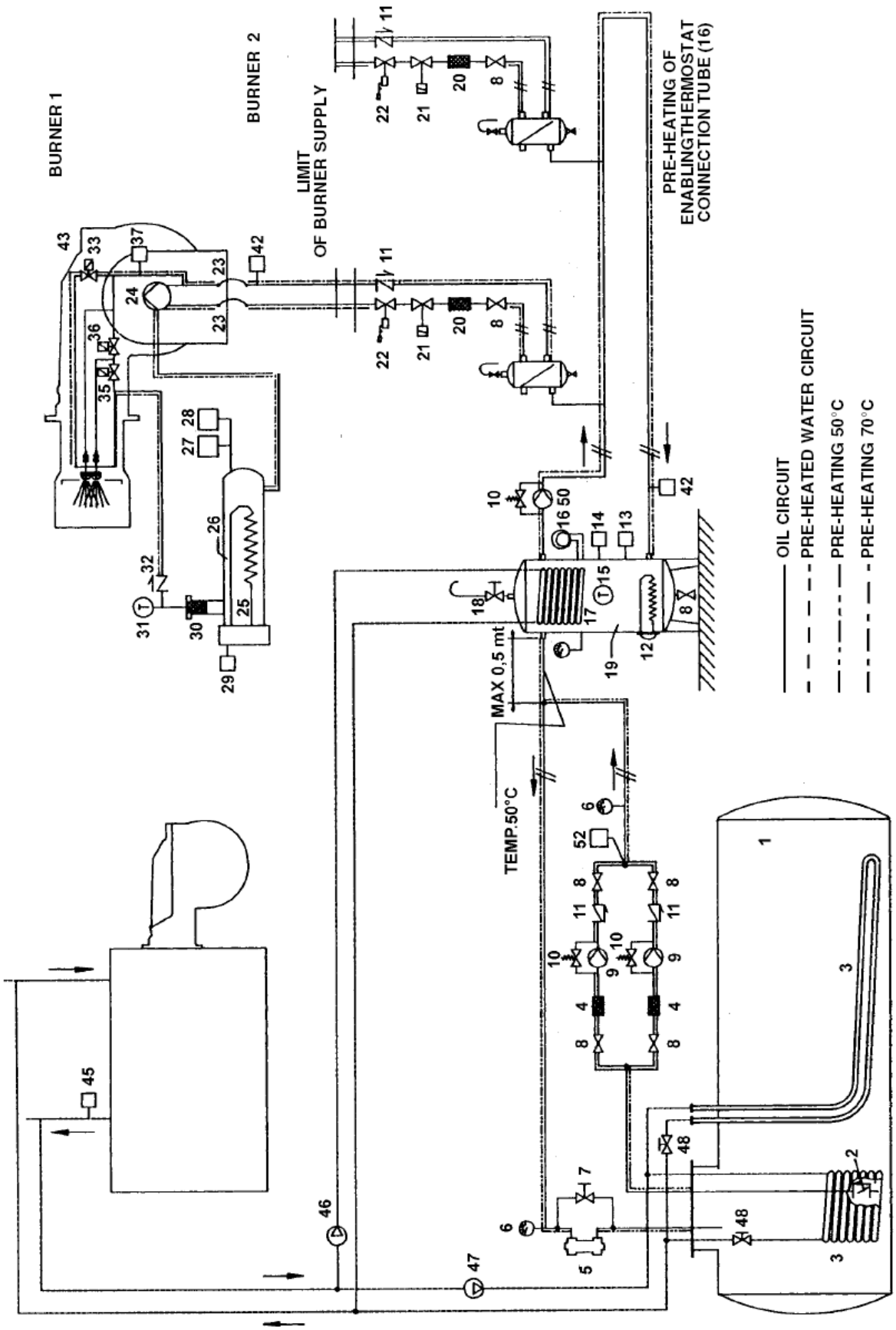

Fig. 3 - Hydraulic diagram 3ID0012 - Two or more burners configuration

* If the heavy oil used is up to 7° E a 50° C (model N-.), the pressure must be 1.5mbar max.

Hydraulic diagrams 3id0010 / 3id0012 – complete key

1 Oil storage tank
2 Foot valve
3 Oil storage tank pre-heating coils (1)
4 Oil circuit filter (1 mm mesh)
5 Circuit pressure regulator
6 Pressure gauge scale 0 - 10 bars
7 Pressure regulator by-pass valve (5)
8 Gate valve
9 Oil circuit pressure regulator pump
10 Pump pressure regulator (9)
11 One-way valve
12 Oil buffer tank pre-heater (19)
13 Oil buffer tank thermostat
14 Burner enabling thermostat
15 Thermometer scale 0 - 90° C
16 Oil buffer tank heater enabling pressure switch
17 Oil buffer tank pre-heating coil (19)
18 Oil buffer tank air vent valve
19 Oil buffer tank, capacity 600 l approx.
20 Oil filter (0.3 mm mesh)
21 Fuel cutoff solenoid valve
22 Fuel gate valve
23 Burner pump hoses (24)
24 Burner oil pump
25 Pre-heating tank resistor
26 Pre-heating tank
27 Oil enabling thermostat TCN (26)
28 Pre-heating tank resistor safety thermostat TRS (26)
29 Oil temperature regulator thermostat TN (26)
30 Pre-heating tank (26) filter (0.1 mm mesh)
31 Thermometer 0 - 200° C
32 Check valve, opening 3.5 - 6 bars
33 N. O. burner 1st stage solenoid valve EVN1
35 N. O. burner 2nd stage solenoid valve EVN2
36 N. C. burner 2nd stage solenoid valve EVN3
37 Ignition enabling thermostat TCI
42 Burner enabling thermostat
43 Burner
45 Coils and tubes pre-heating pumps thermostat
46 Oil buffer tank pre-heating water pump (19)
47 Oil storage tank pre-heating water pump (1)
48 Pre-heating water balance calibration valves
50 Oil pump (diagram 3ID0012 only)
52 Maximum circuit pressure switch (if present)

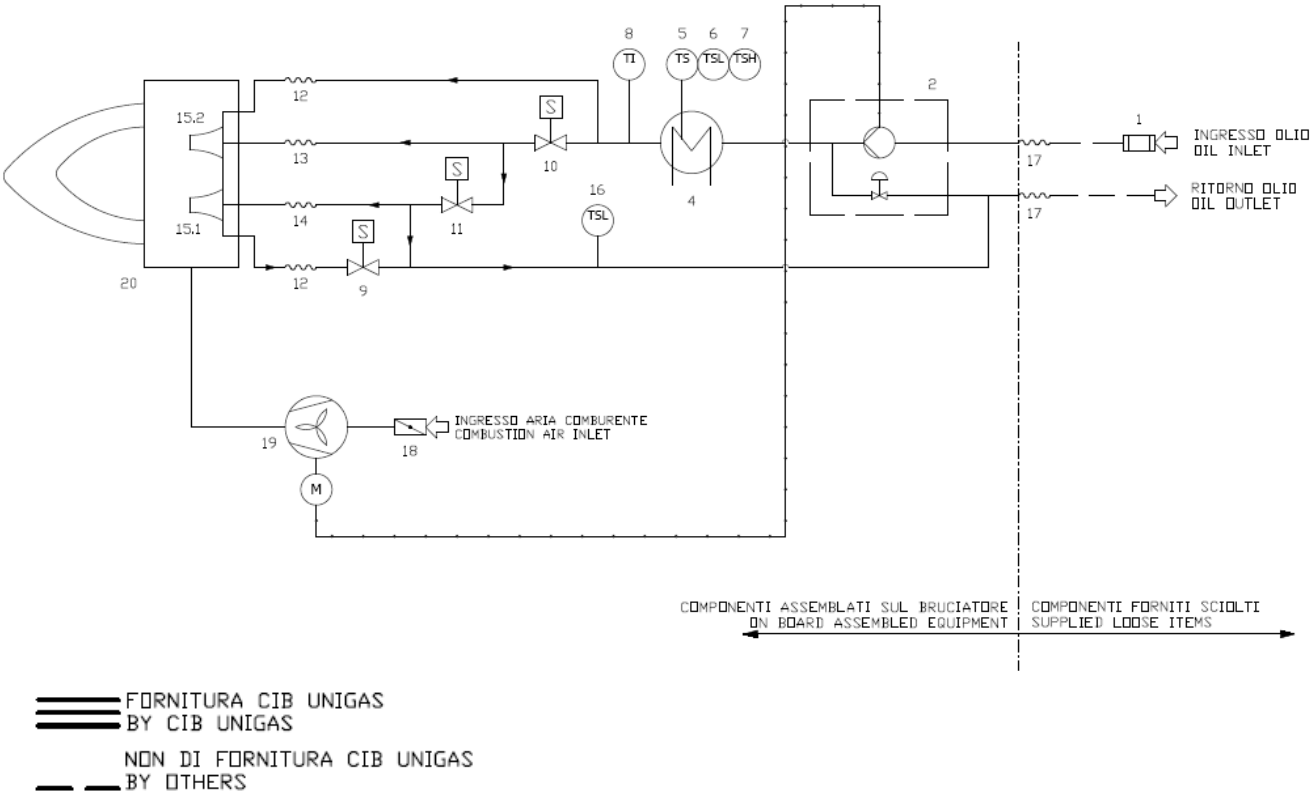

3I2D-05	KEYS
1	Filter
2	Pump and pressure governor
4	Electrical preheater tank
5	Thermostat - TR
6	Low thermostat - TCN
7	High thermostat - TRS
8	Thermometer
9	Solenoid valve - EVN1-NO
10	Solenoid valve - EVN2-NO
11	Solenoid valve - EVN3-NC
12	Flexible hose
13	Flexible hose
14	Flexible hose
15.1	Nozzle - I° stage
15.2	Nozzle - II° stage
16	Thermostat - TCI
17	Flexible hose
20	Burner
18	Air damper with actuator
19	Draught fan with electromotor

Working phase	***Valve status EVN1-NO***	***Valve status EVN2-NO***	***Valve status EVN3-NC***
Prepurge	Not energised (open)	Not energised (open)	Not energised (closed)
First stage	Energised (closed)	Not energised (open)	Not energised (closed)
Second stage	Energised (closed)	Energised (closed)	Energised (open)

Pump operating principle

In the burners, the mixture bertween oil and air, to perform a clean and efficient combustion, is activated by atomization of oil into very small particles. This process is achieved making oil passing through the nozzle at a determined pressure
The pump's main function is to transfer oil from the tank to the nozzle in the desired quantity and pressure. To adjust this pressure, pumps are provided with a pressure regulator (except for some models for which a separate regulating valve si provided).
Other pumps are provided with two pressure regulators: one for the high and one for low pressure (in tow-stage systems with one nozzle).
These pumps can be installed both into single-pipe and double-pipe systems.
Single-pipe system: a single pipe drives the oil from the tank to the pump's inlet. Then, from the pump, the pressurised oil is driven to the nozzle: a part comes out from the nozzle while the othe part goes back to the pump. In this system, the by-pass pulg, if provided, must be removed and the optional return port, on the pump's body, must be sealed by steel plug and washer.
Double-pipe system: as for the single pipe system, a pipe that connects the tank to the pump's inlet is used besides another pipe that connects the pum's return port to the tank, as well. The excess of oil goes back to the tank: this installation can be considered self-bleeding. If provided, the inside by-pass plug must be installed to avoid air and fuel passing through the pump.
Burners come out from the factory provided for double-stage systems. They can be suited for single-pipe system (recommended in the case of gravity feed) as decribed before

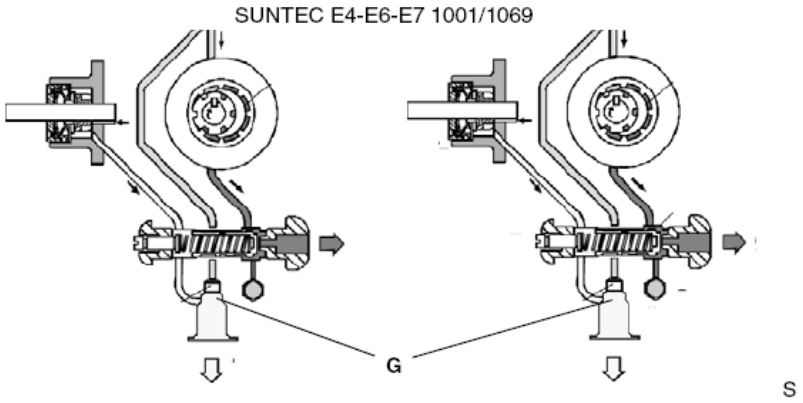

Bleed

Bleeding in two-pipe operation is automatic: it is assured by a bleed flat on the piston. In one-pipe operation, the plug of a pressure gauge port must be loosened until the air is evacuated from the system.

About the use of fuel pumps

- Make sure that the by-pass plug is not used in a single pipe installation, because the fuel unit will not function properly and damage to the pump and burner motor could result.
- Do not use fuel with additives to avoid the possible formation over time of compounds which may deposit between the gear teeth, thus obstructing them.
- After filling the tank, wait before starting the burner. This will give any suspended impurities time to deposit on the bottom of the tank, thus avoiding the possibility that they might be sucked into the pump.
- On initial commissioning a "dry" operation is foreseen for a considerable length of time (for example, when there is a long suction line to bleed). To avoid damages inject some lubrication oil into the vacuum inlet.
- Care must be taken when installing the pump not to force the pump shaft along its axis or laterally to avoid excessive wear on the joint, noise and overloading the gears.
- Pipes should not contain air pockets. Rapid attachment joint should therefore be avoided and threaded or mechanical seal junctions preferred. Junction threads, elbow joints and couplings should be sealed with removable sg component. The number of junctions should be kept to a minimum as they are a possible source of leakage.
- Do not use PTFE tape on the suction and return line pipes to avoid the possibility that particles enter circulation. These could deposit on the pump filter or the nozzle, reducing efficiency. Always use O-Rings or mechanical seal (copper or aluminium gaskets) junctions if possible.
- An external filter should always be installed in the suction line upstream of the fuel unit..

Oil pumps

Pumps for heavy oil - viscosity ≤ 50cSt (7° E) @ 50° C

Suntec E4 - E6 - E7 1001	
Oil viscosity	2.8 - 450 cSt
Oil temperature	0 - 90 °C
Minimum inlet pressure	- 0.45 bar to avoid gasing
Maximum inlet pressure	1.5 bar
Maximum return pressure	1.5 bar
Rotation speed	3600 rpm

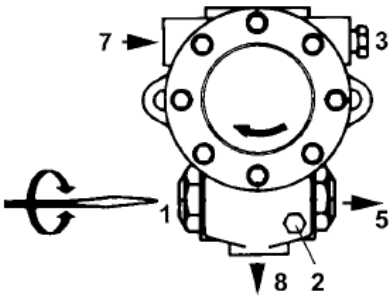

Pumps for heavy oil - viscosity ≤ 400 cSt (50° E) @ 50° C

Suntec E4 - E6 - E7 1069	
Oil viscosity	3 - 75 cСт
Oil temperature	0 - 120 °C
Minimum inlet pressure	- 0.45 bar to avoid gasing
Maximum inlet pressure	3.5 bar
Maximum return pressure	3.5 bar
Rotation speed	3600 rpm

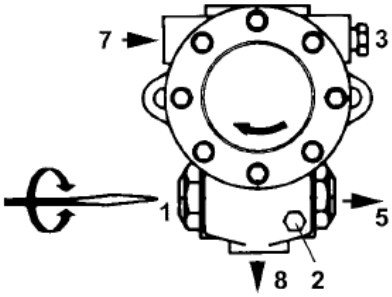

Keys

1. Pressure governor
2. Pump pressure gauge G1/8
3. Vacuum pressure gauge G1/2
4. To the nozzle G1/4
5. Inlet G1/2
6. Return G1/2

Note: the 1069 pumps are fitted with mechanical seal and electric pre-heater (80 W).

Mounting of flexible oil hoses

To connect the flexible light oil hoses to the pump, proceed as follows, according to the pump provided:

- remove the closing nuts on the inlet (A) and return (R) connections of the pump;
- screw the rotating nut of the two flexible hoses on the pump being careful to avoid exchanging the inlet and return lines: see the arrows marked on the pump that show the inlet and the return (see prevoius paragraph).

Suntec E..

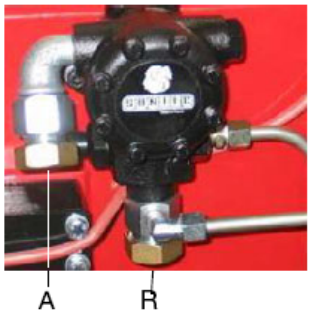

Heavy oil circuit - Operating principle

Pre-purge phase: pipes are at the same pressure	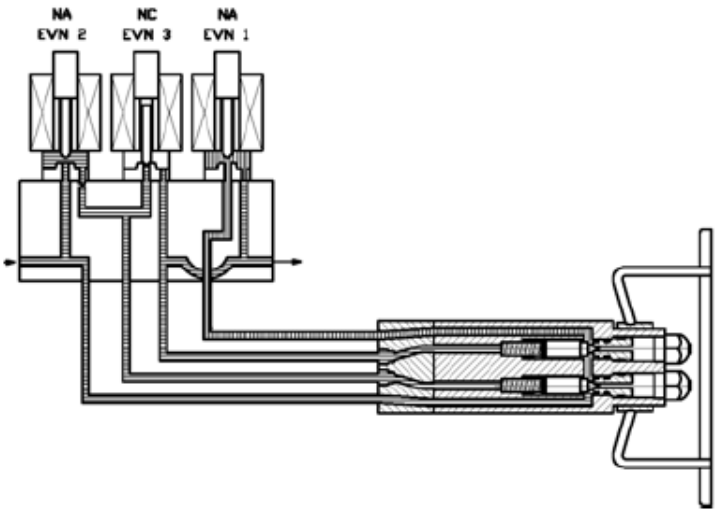
Low flame	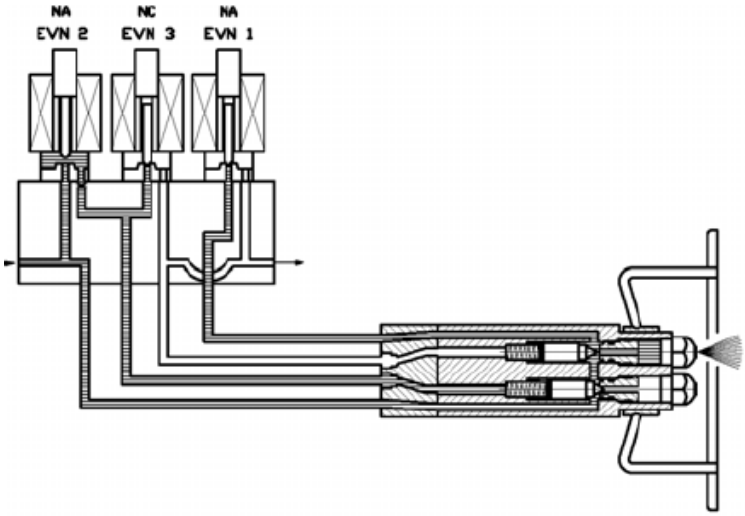
High flame NOTE The black pipes indicate the route of the pressurised oil. pipe with no pressure pressurised pipe	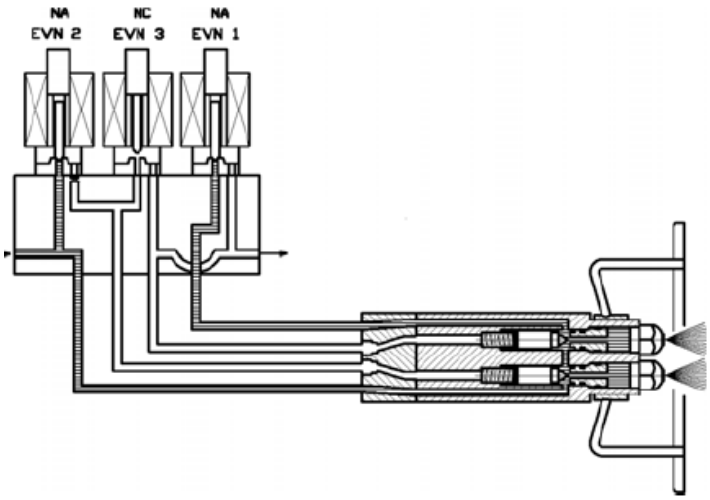

Electrical connections

⚠	Respect the basic safety rules. Make sure of the connection to the earthing system. do not reverse the phase and neutral connections. Fit a differential thermal magnet switch adequate for connection to the mains.
	ATTENTION: before executing the electrical connections, pay attention to turn the plant's switch to OFF and be sure that the burner's main switch is in 0 position (OFF) too. Read carefully the chapter "WARNINGS", and the "Electrical connections" section.

To execute the electrical connections, proceed as follows:

1. remove the cover from the electrical board, unscrewing the fixing screws;
2. execute the electrical connections to the supply terminal board as shown in the following diagrams and refer to the attached wiring diagrams,
3. check the direction of the fan-pump motor (see next pargraph)
4. refit the panel cover.

⚠	WARNING: The burner is provided with an electrical bridge between terminals 6 and 7; when connecting the high/low flame thermostat, remove this bridge before connecting the thermostat.
	IMPORTANT: Connecting electrical supply wires to the burner teminal block MA, be sure that the ground wire is longer than phase and neutral ones.
	IMPORTANT: auxiliary contacts are provided (terminals no. 507 and no. 508 of the MA terminal block) to connect an intervention system (alarm/power supply cutoff) in case of fault of the oil resistor contactor (see Fig).

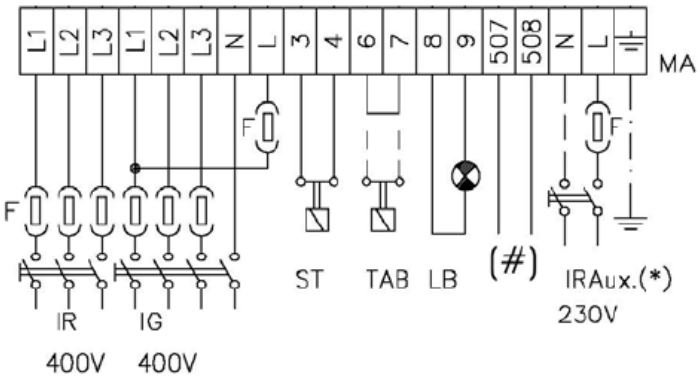

(#) Free contact for "Faulty heater resistor contactor".

Rotation of fan-pump motor (excluded PN30)

Once the eletrical connection is accomplished, remember to check the rotation of the fan-pump motor. It should rotate in an anticlockwise direction looking at cooling fan of the motor. If rotation is not correct, reverse the three-phase supply and check again the rotation of the motor.

NOTE: burners are supplied for three-phase 400 V supply, and in the case of three-phase 230 V supply it is necessary to modify the electrical connections inside the terminal box of the electric motor and replace the overload thermal cutout.

⚠	CAUTION: adjust the thermal cut-out according to the motor rated current value.

Pre-heater resistors

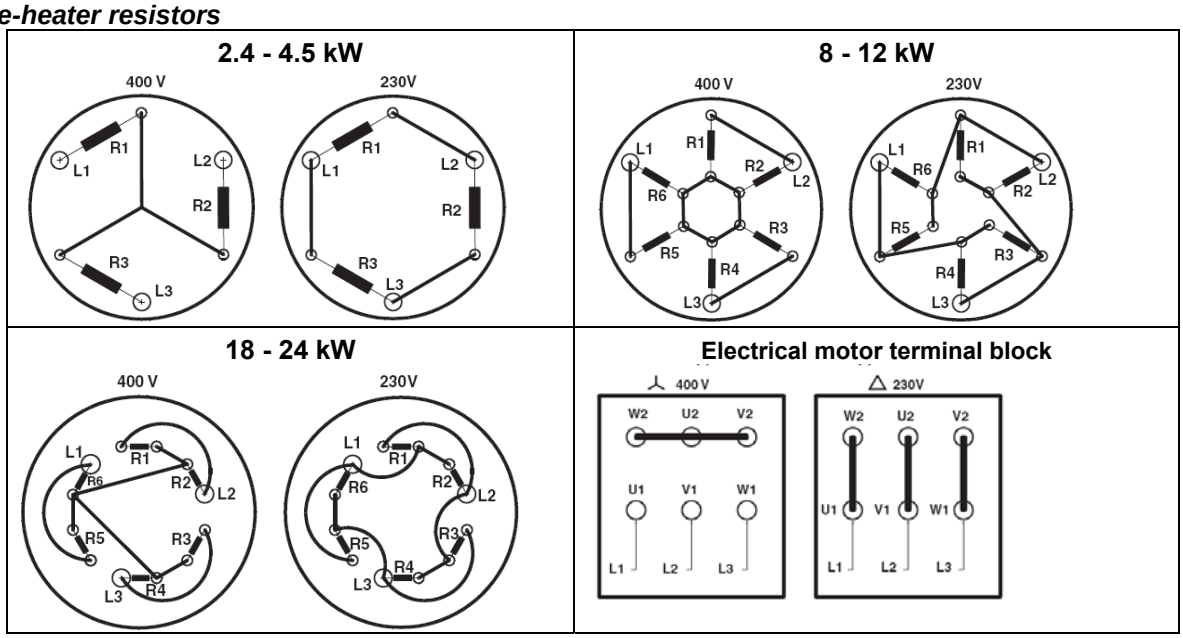

Oil thermostats adjustment

To access the thermostats, remove the cover of the burner switchboard. Calibrate using a screwdriver on the VR screw as shown in figure.

NOTE: thermostat TCI is fitted on burners fired with fuel oil with a viscosity of 400cSt (50 °E) at 50° C only.

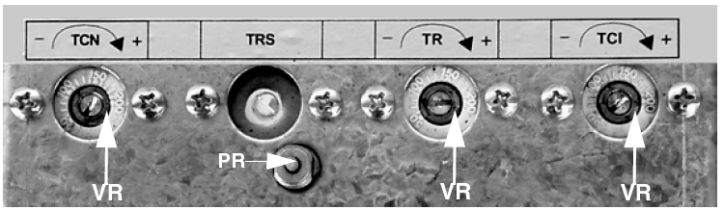

TCN - Oil enabling thermostat: alibrate this thermostat to a value 10% lower than that indicated in the viscosity-temperature diagram).

TRS - Resistor safety thermostat: The thermostat is set during factory testing at a value of about 190°C.

This thermostat trips when the operating temperature exceeds the set limit. Ascertain the cause of the malfunction and reset the thermostat using the PR button.

TR - Resistor thermostat: Calibrate this thermostat to the correct value according to the viscosity-temperature diagram and check the temperature using a thermometer mounted on the pre-heating tank.

TCI - Installation enabling thermostat: This thermostat is fitted on burners fired with oil at a viscosity of 400cSt (50°E) at 50°C only. Set the thermostat to a temperature about 40°C lower than the TR.

Thermostat adjustment for petroleum burners

To find the thermostats, remove the burner switchboard cover. Adjust them using a screwdriver on the VR screw as shown in the next picture.

TCI -Installation enabling thermostat - Set this thermostat to about 40° C.

TCN - Oil enabling thermostat - Adjust this thermostat to a value between 45 and 50°C. Anyway, set TCN to a value possibly lower than the one set for TR (see below).

TR - Resistor thermostat - Adjust this thermostat to a value between 45 and 50°C. Check the temperature by using a thermometer mounted on the pre-heating tank.

TRS - Resistor safety thermostat - The thermostat is set during factory testing at about 190° C.

This thermostat trips when the operating temperature exceeds the set limit. Ascertain the cause of the malfunction and reset the thermostat by means of the PR button (see picture).

CAUTION: even if the adjusting ranges for the TR (Resistor thermostat) and TCN (Oil enabling thermostat) are the same, set TCN to a value lower than the one set for TR.

ADJUSTMENTS

⚠	***ATTENTION: before starting the burner up, be sure that the manual cutoff valves are open and check that the pressure upstream the gas train complies the value quoted on paragraph "Technical specifications". Be sure that the mains switch is closed.***
	ATTENTION: During commissioning operations, do not let the burner operate with insufficient air flow (danger of formation of carbon monoxide); if this should happen, make the fuel decrease slowly until the normal combustion values are achieved.
	WARNING: NEVER LOOSE THE SEALED SCREWS! OTHERWISE, THE DEVICE WARRANTY WILL BE INVALIDATE!
	Prior to start up the burner, make sure that the return pipe to the tank is not obstructed. Any obstruction would cause the pump seal to break.

⚠	**IMPORTANT! the combustion air excess must be adjusted according to the in the following chart:**

Recommended combustion parameters		
Fuel	***Recommended (%) CO_2***	***Recommended (%) O_2***
Heavy oil	11 ÷ 12	4.2 ÷ 6.2

Priming the pump

⚠	Prior to start up the burner, make sure that the return pipe to the tank is not obstructed. Any obstruction would cause the pump seal to break.

Adjusting the heavy oil flow rate

Oil flow rate is regulated by choosing the correct size of nozzle for the 1st and 2nd stages and calibrating pump delivery pressure (see outline oil circuit diagrams). To select the nozzles, refer to Tab. 1. To adjust the pump pressure, see pag. 21. Further information on oil pump see the following paragraphs.

Choosing the oil nozzles

NOZZLE G.P.H.	PUMP PRESSURE bar			NOZZLE G.P.H.	PUMP PRESSURE bar		
	24	**25***	**26**		**24**	**25***	**26**
1.35	8.70	8.90	9.10	6.50	41.90	42.80	43.60
1.50	9.70	9.90	10.10	7.00	45.10	46.10	47.00
1.65	10.60	10.90	11.10	7.50	48.40	49.40	50.30
1.75	11.30	11.50	11.70	8.30	53.50	54.60	55.70
2.00	12.90	13.20	13.40	9.50	61.30	62.5	63.8
2.25	14.50	14.80	15.10	10.50	67.70	69.1	70.5
2.,50	16.10	16.50	16.80	12.00	77.4	79	80.5
3.00	19.30	19.70	20.10	13.80	89	90.8	92.6
3.50	22.50	23.00	23.50	15.30	98.7	100.7	102.7
4.00	25.80	26.30	26.80	17.50	112.8	115.2	117.5
4.50	29.00	29.60	30.20	19.50	125.7	128.3	130.9
5.00	32.20	32.90	33.60	21.50	138.6	141.5	144.3
5.50	35.50	36.20	36.90	24.00	154.8	158	161.10
6.00	38.70	39.50	40.30	28.00	180.6	184.3	187.90
* Factory-set pressure							

Tab 1 - Nozzle flow rate (kg/h) according to oil pressure

Burner ignition procedure

Oil pump

- Check that mains voltage corresponds to the voltage indicated on the rating plate.
- Check oil pressure in the feeding hydraulic circuit (about 2 bar at 50°C).
- Check that the oil supply cocks are open.
- Check that the motor rotates anticlockwise looking at the motor from the cooling cover.
- Act on the motor contactor until the pre-heating tank and entire burner oil circuit is full.

Refer to the hydraulic diagrams on pages 14-15 and Fig. 6 - Fig. 7. Also see pictures below.
After filling the pre-heating tank, the burner is ready for operation.
Turn on the main switch on the burner switchboard. This starts pre-heating of the oil until the temperature set on thermostat TCN is reached. The resistors remain on until the temperature set on thermostat TR is reached.
When the contact of thermostat TCN closes, the fan motor starts up and the pre-washing phase begins. During this phase, the oil is sucked up by the pump (no.24 in Fig. 6 - Fig. 7), passes through the filter (no.20 in Fig. 6 - Fig. 7) and is introduced into the tank (26) where it is pre-heated.
On leaving the pre-heating tank, the oil crosses the check valve (no.32 in Fig. 6-Fig. 7) and reaches the nozzle U (normally closed by pin S). It crosses the normally open valve EN1 and returns to the oil buffer tank (no.19 in Fig. 6 - Fig. 7).
The pre-washing phase is necessary to remove possible fuel residues accumulated during the period of inactivity and completely free the piping and nozzle assembly of obstacles. During this phase, the flow of oil to the nozzles at the ideal temperature for combustion is guaranteed.
At the end of pre-washing, the temperature at the nozzles is the same as the temperature in the pre-heating tank. The servo control supplies the EVN1 valve and the pump pressure acts on the pin, causing it to move back and allowing the oil to flow freely to the nozzle.
About eight seconds after burner ignition, the TAB thermostat activates the air servo control. This brings the damper to the maximum open position and, via a limit microswitch, supplies the normally open valve EVN2 and the normally closed valve EVN3, enabling the oil to flow to the second nozzle U'.

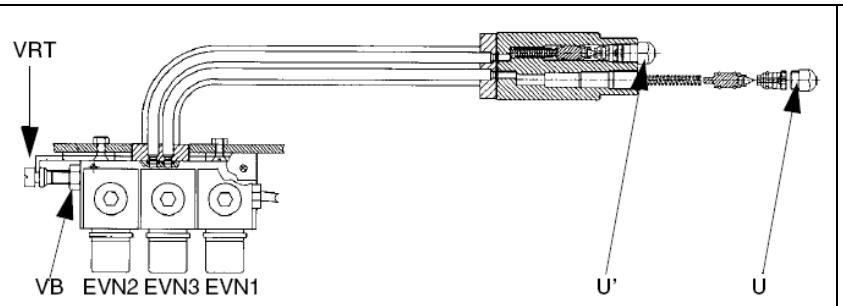

Fig. 4

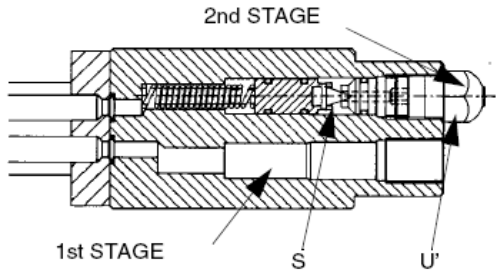

Fig. 5

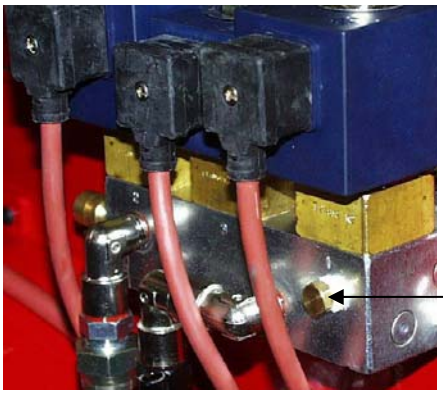

Adjusting the combustion head

The burner is adjusted by the factory with the combustion head in the "MAX." position, corresponding to the maximum output. To operate at a reduced power, move back the combustion head progressively, towards the "MIN." position, by means of the screw VRT (see picture below).

NOTE: Unloose the screw VB before start the setting and tight it at the end of setting.

ATTENTION: adjust the combustion head only if necessary..

Air flow regulation

Air flow is adjusted by means of the cams on the air damper actuator.

1. Remove the actuator cover.
2. Start the the burner up and leave it in the low flame stage (remove the bridge between terminals 6 and 7).
3. Adjust the air flow rate at low flame by means of the related cam (see table below).
4. Drive the burner to the high flame stage (bridge terminals 6 and 7).
5. Adjust the air flow rate at high flame by means of the related cam (see table below).
6. The third cam enables 2nd stage fuel valve opening (valves EVN2 and EVN3). It must be set between the two other cams, about 5° more than cam ST1 or cam II.
7. Replace the actuator cover.

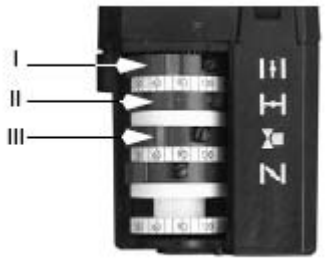

PN30-PN60: Berger STA4.5

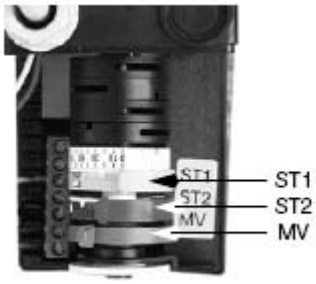

PN70 - PN81: Berger STA6

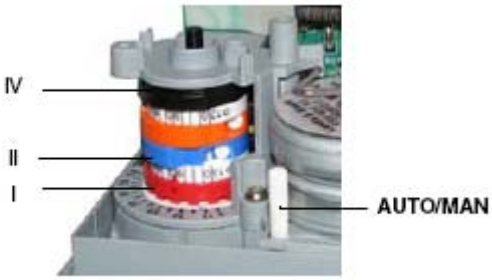

PN60 - PN70 - PN81 - PN91: Siemens SQN72

	Berger STA4.5	Berger STA6	Siemens SQN72
”Air adjustment in high flame” cam	I	ST2	I (red)
Air adjustment in low flame - Stand-by - Ignition cam	II	ST1	II (blue)
Auxiliary cam for the opening consent to the second fuel valve	III	MV	IV (black)

Note: to move the actuator cams, use the followings:

Berger STA4: this actuator is not provided with the manual control of the air damper. The adjustment of the cams is carried out by means of a screwdriver, by twisting the VS screw located inside the cam.

Berger STA6: this actuator is not provided with the manual control of the air damper. The adjustment of the cams is carried out by means of the cam lever.

Siemens SQN72: a key is provided to move cams I and IV, the other cams can be moved by means of screws. On the Siemens actuator the AUTO/MAN mode is provided (see picture).

PART II – OPERATION

LIMITATION OF USE

THE BURNER IS AN APPLIANCE DESIGNED AND CONSTRUCTED TO OPERATE ONLY AFTER BEING CORRECTLY CONNECTED TO A HEAT GENERATOR (E.G. BOILER, HOT AIR GENERATOR, FURNACE, ETC.), ANY OTHER USE IS TO BE CONSIDERED IMPROPER AND THEREFORE DANGEROUS.

THE USER MUST GUARANTEE THE CORRECT FITTING OF THE APPLIANCE, ENTRUSTING THE INSTALLATION OF IT TO QUALIFIED PERSONNEL AND HAVING THE FIRST COMMISSIONING OF IT CARRIED OUT BY A SERVICE CENTRE AUTHORISED BY THE COMPANY MANUFACTURING THE BURNER.
A FUNDAMENTAL FACTOR IN THIS RESPECT IS THE ELECTRICAL CONNECTION TO THE GENERATOR'S CONTROL AND SAFETY UNITS (CONTROL THERMOSTAT, SAFETY, ETC.) WHICH GUARANTEES CORRECT AND SAFE FUNCTIONING OF THE BURNER.

THEREFORE, ANY OPERATION OF THE APPLIANCE MUST BE PREVENTED WHICH DEPARTS FROM THE INSTALLATION OPERATIONS OR WHICH HAPPENS AFTER TOTAL OR PARTIAL TAMPERING WITH THESE (E.G. DISCONNECTION, EVEN PARTIAL, OF THE ELECTRICAL LEADS, OPENING THE GENERATOR DOOR, DISMANTLING OF PART OF THE BURNER).

NEVER OPEN OR DISMANTLE ANY COMPONENT OF THE MACHINE.

OPERATE ONLY THE MAIN SWITCH, WHICH THROUGH ITS EASY ACCESSIBILITY AND RAPIDITY OF OPERATION ALSO FUNCTIONS AS AN EMERGENCY SWITCH, AND ON THE RESET BUTTON.

IN CASE OF A BURNER SHUT-DOWN, RESET THE CONTROL BOX BY MEANS OF THE RESET PUSHBUTTON. IF A SECOND SHUT-DOWN TAKES PLACE, CALL THE TECHNICAL SERVICE, WITHOUT TRYING TO RESET FURTHER.

WARNING: DURING NORMAL OPERATION THE PARTS OF THE BURNER NEAREST TO THE GENERATOR (COUPLING FLANGE) CAN BECOME VERY HOT, AVOID TOUCHING THEM SO AS NOT TO GET BURNT.

OPERATION

⚠	ATTENTION: before starting the burner up, be sure that the manual cutoff valves are open. Be sure that the mains switch is closed.

- Turn to position 1 the switch A, placed on the burner control panel.
- Make sure the burner is not locked (LED B on). If necessary, reset by presisng button C.
- Make sure the series of thermostats (or pressure switches) enables burner operation.
- Start the burner ignition cycle. The control unit starts up the burner fan and at the same time turns the ignition transformer on (LED H on). Pre-purgue lasts some seconds depending on the control unit fitted on the burner.
- At the end of pre-purgue time, the oil solenoid valve is powered up (1st stage, EVN1), indicated by the LED D on the graphic panel. The burner is ignited.
- The ignition transformer remains on for a few seconds after flame ignition (post-ignition time). At the end of this period, it is cut out of the circuit and LED H turns off.
- The burner is operating in the low flame stage (LED G on). After few seconds (depending on the control box provided) the two-stage operation starts and the burner operates automatically on high flame or low flame according to the demand from the installation. High or low flame operation is indicated by turning on and off of LED F on the graphic panel. LED E shows the opening of solenoid valves EVN2 and EVN3 supplying the 2nd stage nozzle (high flame).

PN30-PN60

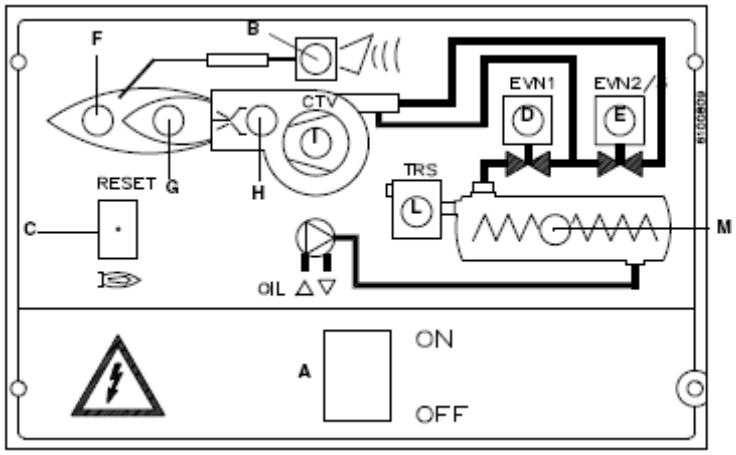

PN70-PN8 1-PN91-PN92

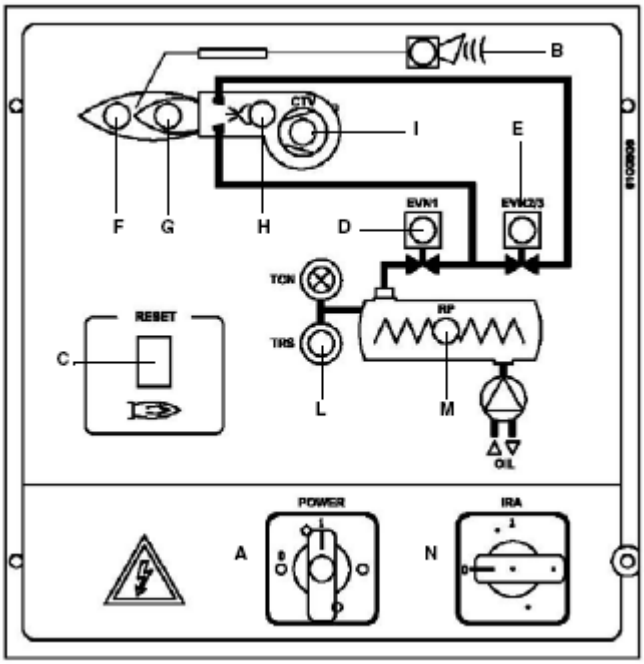

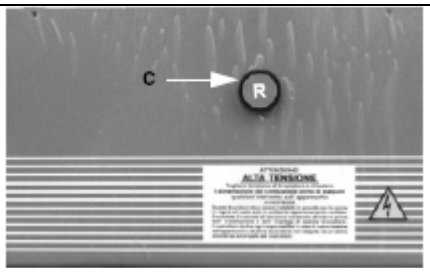

Control box reset button on PN30 and PN60

Keys

A	Main on/off switch
B	Shut down indicator light
C	Burner control box reset button (except PN30, PN60 e PN70, see picture)
D	1st stage solenoid valve opening indicator light
E	2nd stage solenoid valve opening indicator light
F	High flame operation indicator light
G	Low flame operation indicator light
H	Ignition transformer operation indicator light
I	Thermal cutout tripped indicator light
L	Resistors safety thermostat tripped indicator light
M	Pre-heat resistor light
N	Auxiliary resistors switch

PART III: MAINTENANCE

At least once a year carry out the maintenance operations listed below. In the case of seasonal servicing, it is recommended to carry out the maintenance at the end of each heating season; in the case of continuous operation the maintenance is carried out every 6 months.

⚠	WARNING: ALL OPERATIONS ON THE BURNER MUST BE CARRIED OUT WITH THE MAINS DISCONNECTED AND THE FUEL MANAUL CUTOFF VALVES CLOSED!.
	ATTENTION: READ CAREFULLY THE “WARNINGS” CHAPTER AT THE BEGINNIG OF THIS MANUAL.

ROUTINE MAINTENANCE

1. Clean and examine the oil filter cartridge and replace it if necessary.
2. Examine the condition of the oil flexible tubing and check for possible leaks.
3. Check and clean if necessary the oil heaters and the tank, according to the fuel type and its use; remove the heaters flange fixing nuts and remove the heaters from the tank: clean by using steam or solvents and not metallic things.
4. Clean and examine the filter inside the oil pump. Filter must be thoroughly cleaned at least once in a season to ensure correct working of the fuel unit. To remove the filter, unscrew the four screws on the cover. When reassemble, make sure that the filter is mounted with the feet toward the pump body. If the gasket between cover and pump housing should be damaged, it must be replaced. An external filter should always be installed in the suction line upstream of the fuel unit.
5. Remove and clean the combustion head (see following paragraphs).
6. Examine and clean the ignition electrodes, adjust and replace if necessary (see pag. 24).
7. Examine and clean the detection probe, adjust and replace if necessary (see pag. 24).
8. Examine the detection current (see pag. 26).
9. Remove and clean (pag. 26) the heavy oil nozzle (Important: use solvents for cleaning, not metallic tools) and at the end of the maintenance procedures, after replacing the burner, turn it on and check the shape of the flame; if in doubt replace the nozzle. Where the burner is used intensively it is recommended to replace the nozzle as a preventive measure, at the begin of the operating season.
10. Clean and grease joints and rotating parts.

IMPORTANT:Remove the combustion head before checking the ignition electrodes.

.

⚠	CAUTION: avoid the contact of steam, solvent and other liquids with the electric terminals of the resistor. On flanged heaters, replace the seal gasket before refitting it. Periodic inspections must be carried out to determine the frequency of cleaning.

Self-cleaning filter

Fitted only on high viscosity oil burners. Periodically turn the knob to clean the filter.	

Removing the combustion head

Remove cover C;

- remove the photoresistor from its housing;
- unscrew the rotating couplings on the two oil hoses (use two spanners to avoid loosening the couplings fixed to the distributor block);
- remove the complete assembly L as shown in the figure.

Note: to replace, follow the above operations in reverse order.

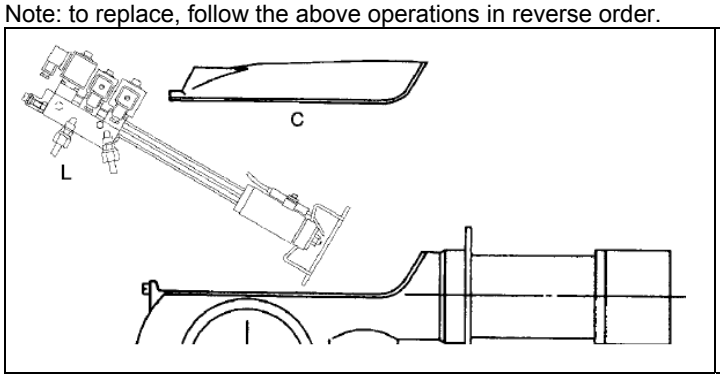

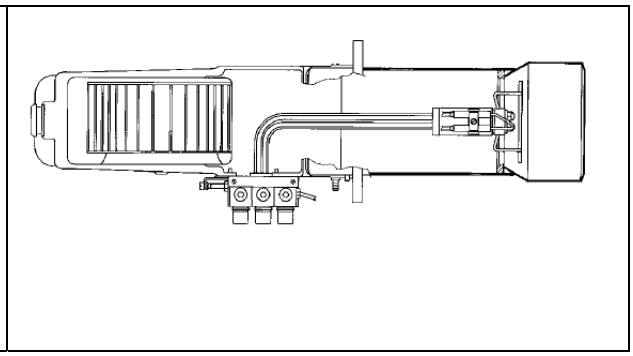

Correct position of electrodes and combustion head

⚠	ATTENTION: avoid the electrodes to get in touch with metallic parts (blast tube, head, etc.), otherwise the boiler operation would be compromised. Check the electrodes position after any intervention on the combustion head.

To guarantee efficient ignition, abserve the measures shown on the pictures below. Make sure the electrode locking screw is tight before replacing the combustion head.

PN30

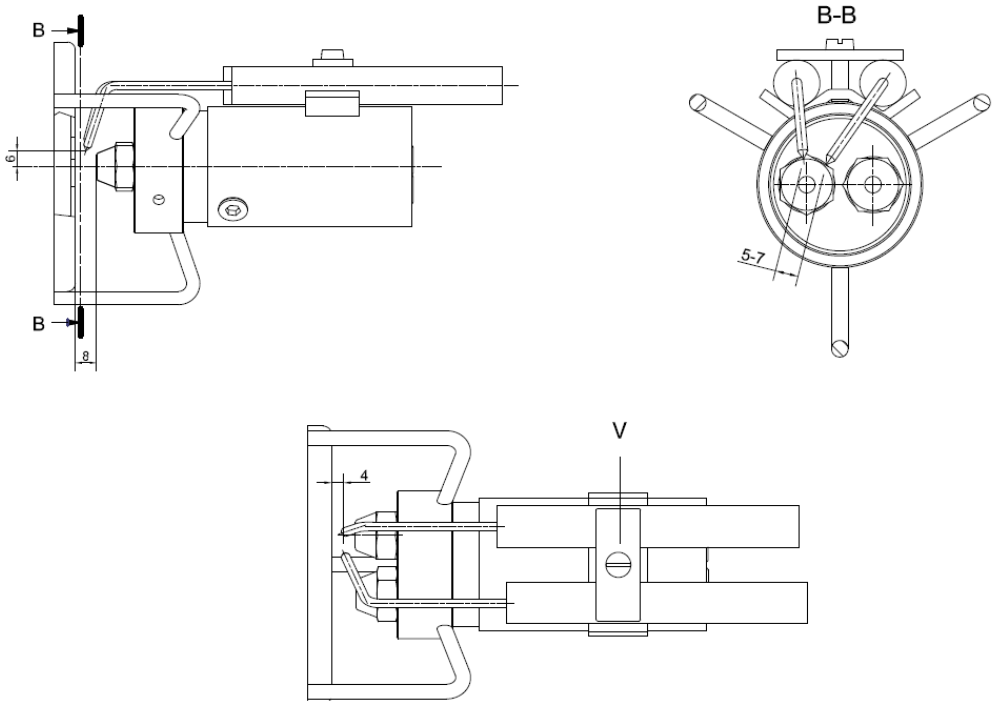

Рис. 6

PN60/70/81/91/92

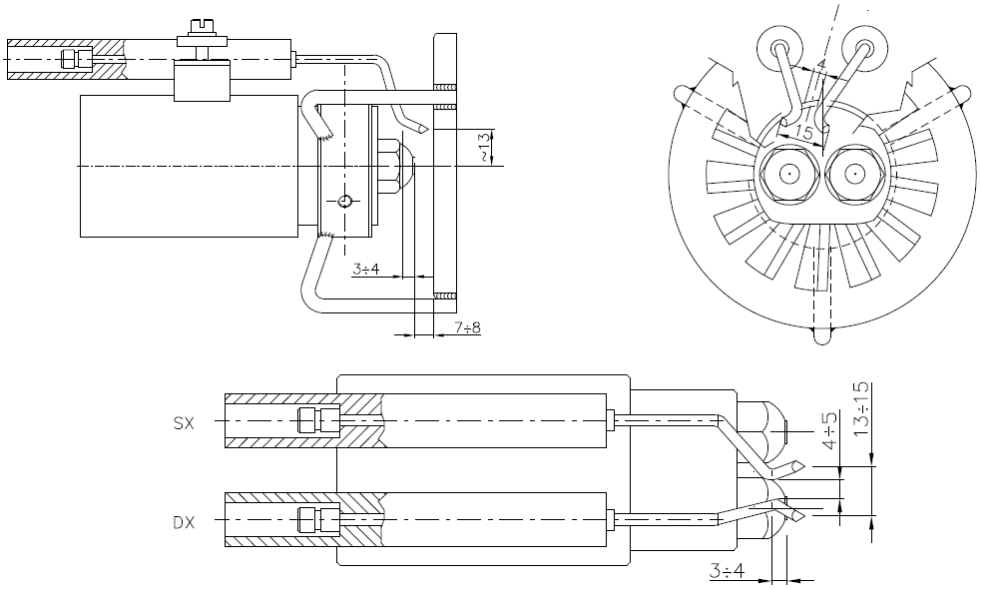

Cleaning and replacing the detection photoresistor

To clean/replace the photoresistive detector, remove it from its slot. To clean the photoresistor, use a clean cloth, not cleaning sprays.

Checking the detection current

To measure the detection signel, follow the scheme in Fig.).

If the signal does not correspond to the quoted values, check the electricl contacts, if the combustion head is clean and the photoresistor probe position (replace it if necessary).

Control box	Flame sensor	Minimum detection signal
LMO44	QRB4	45μA
LAL2..	QRB1	95μA

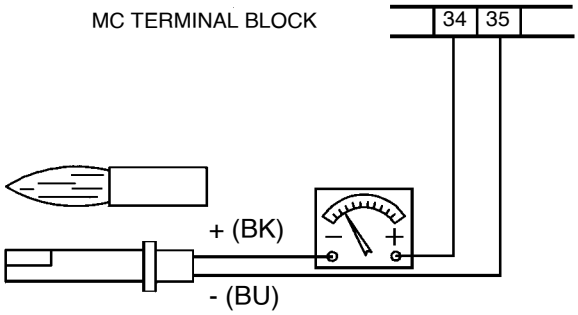

Seasonal stop

To stop the burner in the seasonal stop, proceed as follows:

- turn the burner main switch to 0 (Off position)
- disconnect the power mains
- close the fuel valve of the supply line

Burner disposal

In case of disposal, follow the instructions according to the laws in force in your country about the “Disposal of materials”.

TROUBLESHOOTING

CAUSES/TROUBLES	DOES NOT START UP	CONTINUES PRE-PURGUE	BURNER STARTS UP WITH COLD OIL	DOES NOT IGNITE AND GOES TO SHUT DOWN	DOES NOT PASS TO HIGH FLAME	GOES TO SHUT DOWN DURING OPERATION	GOES OFF AND REPEATS THE CYCLE DURING OPERATION
MAIN SWITCH OFF	●						
LINE FUSES BLOWN	●						
MAXIMUM THERMOSTAT MALFUNCTION	●						
FAN THERMAL CUTOUT TRIPPED	●						
AUXILIARY FUSE BLOWN	●						
OIL RESISTOR FAULTY	●		●				
OIL ENABLING THERMOSTAT TRIPPED	●		●				
CONTROL UNIT MALFUNCTION	●	●		●	●	●	●
AIR SERVOCONTROL MALFUNCTION					●		
CIRCUIT ENABLING THERMOSTAT		●			●		
SMOKY FLAME						●	●
IGNITION TRANSFORMER MALFUNCTION				●			
IGNITION ELECTRODES WRONGLY POSITIONED				●			
DIRTY NOZZLE				●		●	
FAULTY OIL VALVE				●			●
FAULTY OR DIRTY PHOTORESISTOR							●
FAULTY RESISTOR THERMOSTAT	●						
FAULTY HIGH-LOW FLAME THERMOSTAT					●		
SERVOCONTROL CAM NOT CALIBRATED					●		
LOW OIL PRESSURE				●		●	●
DIRTY OIL FILTER				●		●	●
DIRTY IGNITION ELECTRODES				●			

BURNER EXPLODED VIEW

ITEM	DESCRIPTION
1.1	COVER
1.2	FLANGE
1.4	BURNER HOUSING
2	INSPECTION GLASS
4	GENERATOR GASKET
5.1	OIL PRE-HEATER
5.2	SHEATH
5.3	O RING
5.4	COVER
5.5	PLUG
5.8	RESISTOR
5.9.1	GAS BLEEDING VALVE
5.9.2	THERMOMETER
5.9.3	OIL FILTER
5.9.5	GASKET
6	PHOTORESISTOR
7	STANDARD BLAST TUBE
8.1	MOTOR
8.2	FAN WHEEL
9	AIR INLET CONE
12.1	AIR INTAKE
12.3	LOUVER SHAFT
12.4	AIR INTAKE DAMPER
12.5	AIR INTAKE DAMPER
12.9	LOUVER SHAFT

ITEM	DESCRIPTION
12.11	BRACKET
12.12	ACTUATOR
13	COUPLING
14.3	OIL MANIFOLD
14.6	OIL MANIFOLD
14.7	OIL SOLENOID VALVE
14.8	OIL SOLENOID VALVE
14.9	O RING
15.1	BOARD
15.2	THERMOSTAT
15.3	THERMOSTAT
15.5	COVER
15.9.1	CONTROL BOX
15.9.2	IGNITION TRANSFORMER
15.10	BRACKET
16	IGNITION CABLE
17	FLEXIBLE HOSE
18	FLEXIBLE HOSE
19.1	PUMP
20.1.4	NOZZLE HOLDER
20.1.10	NOZZLE
20.2	COMBUSTION HEAD
20.3	LONG IGNITION ELECTRODE
20.4	SHORT IGNITION ELECTRODE

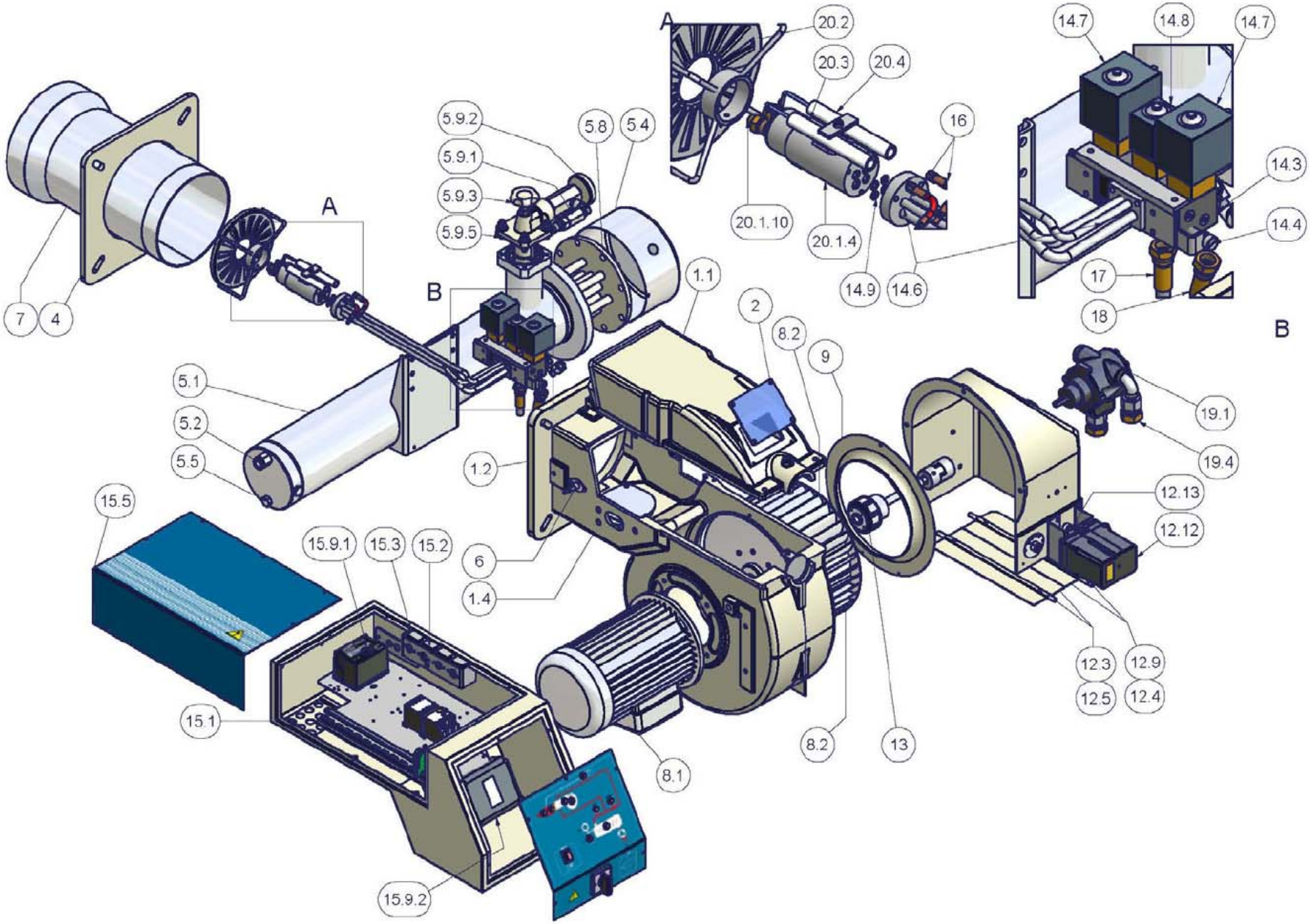
A
20.2
20.3
20.4
16
20.1.10
20.1.4
14.9
14.6
14.7
14.8
14.7
14.3
14.4
17
18
B
5.9.2
5.9.1
5.9.3
5.9.5
5.8
5.4
A
B
7
4
1.1
2
8.2
9
19.1
19.4
5.1
5.2
5.5
1.2
12.13
12.12
15.5
15.9.1
15.3
15.2
6
1.4
12.3
12.5
12.9
12.4
15.1
8.2
13
8.1
15.9.2

SPARE PARTS

DESCRIPTION	PN30	PN60	PN70	PN81	PN91	PN92
CONTROL BOX	2020445	2020445	2020455	2020455	2020455	2020455
SHORT ELECTRODE	2080205	2080249	2080249	2080249	2080249	2080249
LONG ELECTRODE	2080206	2080251	2080251	2080251	2080251	2080251
FILTER - oil viscosity ≤ 50 cSt (7 °E) @ 50 °C	2090202	2090202	2090207	2090207	2090207	2090207
FILTER - oil viscosity ≤ 400 cSt (50 °E) @ 50 °C	2090207	2090207	2090207	2090207	2090207	2090207
GASKET	2110004	2110013	2110033	2110033	2110048	2110047
FAN WHEEL	2150006	2150043	2150018	2150069	2150031	2150032
IGNITION TRANSFORMER	2170305	2170305	2170005	2170005	2170005	2170005
MOTOR	2180008	2180020	218021101	2180256	2180276	2180277
SOLENOID VALVE N.C.	2190420	2190420	2190420	2190420	2190420	2190420
SOLENOID VALVE EVN1-EVN2 N.O.	2190421	2190421	2190421	2190421	2190421	2190421
FLEXIBLE HOSES - oil viscosity ≤ 50 cSt (7 °E) @ 50 °C	2340003	2340003	2340003	2340003	2340003	2340003
FLEXIBLE HOSES - oil viscosity ≤ 400 cSt (50°E) @ 50°C	2340004	2340004	2340004	2340004	2340004	2340004
ACTUATOR (BERGER)	2480057	2480057	2480041	2480041	2480041	2480041
ACTUATOR (SIEMENS)	24800A3	24800A3	24800A3	24800A3	24800A3	24800A3
PHOTORESISTOR	2510003	2510003	2510003	2510003	2510003	2510003
INSTALLATION ENABLING THERMOSTAT TCI	2560026	2560026	2560026	2560026	2560026	2560026
RESISTOR THERMOSTAT TR/TCN	2560026	2560026	2560026	2560026	2560026	2560026
THERMOSTAT (TRS)	2560028	2560028	2560028	2560028	2560028	2560028
PUMP - oil viscosity ≤ 50 cSt (7 °E) @ 50 °C	2590104	2590104	2590105	2590105	2590106	2590106
PUMP - oil viscosity ≤ 400 cSt (50 °E) @ 50 °C	25901A2	25901A2	2590116	2590116	2590117	2590117
NOZZLE	2610004	2610004	2610004	2610016	2610016	2610016
NOZZLE	2610004	2610004	2610017	2610017	2610017	2610017
NOZZLE HOLDER WITH PISTONS	3020084	3020084	3020084	3020084	3020084	3020084
COMBUSTION HEAD	3060173	3060174	30601A7	3060142	3060157	3060181
STANDARD BLAST TUBE	3090033	3090034	30900A7	30900G8	30910E2	30910E3
EXTENDED BLAST TUBE	3090035	3090038	30900B3	30900G9	3091091	30910A2
IGNITION CABLE	6050129	6050129	6050144	6050144	6050144	6050144

NOTE: it is recommended to mention the burner ID number on the spare parts request form.

ELECTRICAL WIRING DIAGRAMS

WARNING:
1 - Electrical supply 400V 50Hz 3N a.c.
2 - Do not reverse phase with neutral
3 - Ensure burner is properly earthed

See the attached wiring diagram.

Wiring diagram: SE04-648

SIEMENS OIL BURNERS AUTOMATIC CONTROLLER SIEMENS LMO14 - LMO24 - LMO44

The LMO... burner controls are designed for the start-up and supervision of single- or 2-stage forced draught oil burners in intermittent operation. Yellow-burning flames are supervised with photoresistive detectors QRB..., blue-burning flames with blue-flame detectors QRC...

In terms of housing dimensions, electrical connections and flame detectors, the LMO... are identical to the LOA... oil burner controls.

Preconditions for startup

Burner control is reset
All contacts in the line are closed
No undervoltage
Flame detector is darkened, no extraneous light

Undervoltage

Safety shut-down in the operating position takes place should the mains voltage drop below about AC 165 V
Restart is initiated when the mains voltage exceeds about AC 175 V

Time supervision oil pre-heater

If the oil pre-heater's release contact does not close within 10 minutes, the burner control will initiate lock-out.

Controlled intermittent operation

After no more than 24 hours of continuous operation, the burner control will initiate an automatic safety shut-down followed by a restart.

Control sequence in the event of fault

If lock-out occurs, the outputs for the fuel valves and the ignition will immediately be deactivated (< 1 second).

Cause	Response
After a mains failure	Restart
After voltage has fallen below the undervoltage threshold	Restart
In the event of a premature, faulty flame signal during «t1»	Lock-out at the end of «t1»
In the event of a premature, faulty flame signal during «tw»	Prevention of start-up, lock-out after no more than 40 seconds
If the burner does not ignite during «TSA»	Lock-out at the end of TSA
In the event the flame is lost during operation	Max. 3 repetitions, followed by lock-out
Oil pre-heater's release contact does not close within 10 min.	Lock-out

Lock-out

In the event of lock-out, the LMO... remains locked (lock-out cannot be changed), and the red signal lamp will light up. This status is also maintained in the case of a mains failure.

Resetting the burner

Whenever lock-out occurs, the burner control can immediately be reset. To do this, keep control the lock-out reset button depressed for about 1 second (< 3 seconds).

Limitation of repetitions

If the flame is lost during operation, a maximum of 3 repetitions can be made. If the flame is lost for the 4th time during operation, the burner will initiate lock-out. The repetition count is restarted each time controlled switching on by «R-W-SB» takes place.

Operation

Lock-out reset button «EK...» is the key operating element for resetting the burner control and for activating / deactivating the diagnostic functions.

The multicolour «LED» is the key indicating element for both visual diagnosis and interface diagnosis.

s red
l yellow
o green

Colour code table		
Status	Colour code	Colour
Oil pre-heater heats, waiting time «tw»	llllllllll	Yellow
Ignition phase, ignition controlled	lmlmlmlmlml	Yellow-off
Operation, flame o.k.	oooooooooooo	Green
Operation, flame not o.k.	omomomomomo	Green-off
Undervoltage	lslslslslsl	Yellow-red
Fault, alarm	ssssssssssss	Red
Output of fault code (refer to Fault code table)	smsmsmsmsm	Red-off
Extraneous light prior to burner start-up	osososososo	Green-red
Interface diagnosis	sssssssssssssss	Red flicker light

Key

m Off
l Yellow
o Green
s Red

Diagnosis of cause of fault

After lock-out, the red fault signal lamp remains steady on.
In that condition, the visual diagnosis of the cause of fault according to the error code table can be activated by pressing the lock-out reset button for more than 3 seconds.

Error code table	
Blink code	**Possible cause**
2 blinks **	No establishment of flame at the end of TSA l Faulty or soiled fuel valves l Faulty or soiled flame detector l Poor adjustment of burner, no fuel l Faulty ignition
3 blinks ***	Free
4 blinks ****	Extraneous light on burner startup
5 blinks *****	Free
6 blinks ******	Free
7 blinks *******	Too manny losses of fleme during operation (limitattion og the number of repetitions) l Faulty or soiled fuel valves l Faulty or soiled flame detector l Poor adjustment of burner
8 blinks ********	Time supervision oil pre-heater
9 blinks *********	Free
10 blinks **********	Wiring error or internal error, output contacts

During the time the cause of fault is diagnosed, the control outputs are deactivated.
Burner remains shut down
Fault status signal «AL» at terminal 10 is activated
The diagnosis of the cause of fault is quit and the burner switched on again by resetting the burner control.
Press lock-out reset button for about 1 second (< 3 seconds).

Connection diagram and internal diagram

LMO14

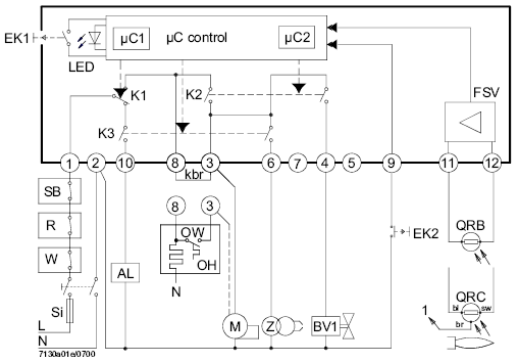

LMO24-LMO44

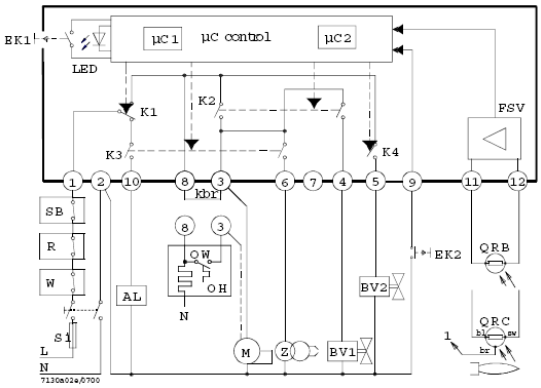

Control sequence

LMO14

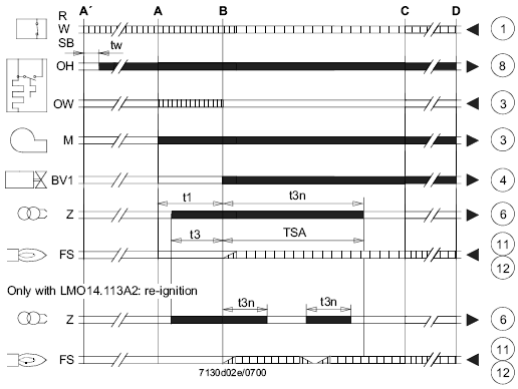

LMO24-LMO44

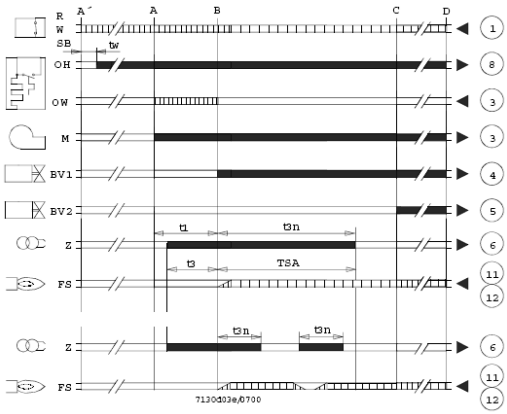

Key

AL Alarm device

kbr... Cable link (required only when no oil pre-heater is used)

BV... Fuel valve

EK1 Lock-out reset button

EK2 Remote lock-out reset button

FS Flame signal

FSV Flame signal amplifier

K... Contacts of control relay

LED 3-colour signal lamps

M Burner motor

OW Release contact of oil pre-heater

t1 Pre-purge time

t3 Pre-ignition time

t3n Post-ignition time

A´ Beginning of start-up sequence with burners using an oil pre-heater

A Beginning of start-up sequence with burners using no oil pre-heater

Controller output signal

Required input signals

OH Oil pre-heater

QRB Photoresistive detector

QRC Blue-flame detector

bl = blue

br = brown

sw = black

R Control thermostat or pressurestat

SB Safety limit thermostat

Si External primary fuse

W Limit thermostat or pressure switch

Z Ignition transformer

t4 Interval from flame signal to release «BV2»

TSA Ignition safety time

tw Waiting time for oil pre-heating

B Time of flame establishment

C Operating position

D Controlled shut-down by «R»

µC1 Microcontroller 1

µC2 Microcontroller 2

General unit data

Mains voltage AC 230 V +10 % / -15 %
AC 120 V +10 % / -15 %

Mains frequency 50...60 Hz ±6 %

External primary fuse (Si) 6.3A (slow)

Power consumption 12 VA

Mounting orientation optional

Weight approx. 200 g

Degree of protection IP40 (to be ensured through mounting)

Perm. cable lengthsmax. 3m at line capacitance of 100 pF/m

Detector cable laid separately 10 m

Remote reset laid separately 20m

	LMO14	***LMO24***	***LMO44***
Terminal 1	5 A	5 A	5 A
Terminals 3 and 8	3 A	5 A	5 A
Terminals 4, 5 and 10	1 A	1 A	1A
Terminals 6	1 A	1 A	2A

Flame supervision with QRB and QRC

	QRB	***QRC***
Min. detector current required (with flame)	45 µA	70 µA
Min detector current permitted (without flame)	5.5 µA	5.5 µA
Max. possible with flame (tipically)	100 µA	100 µA

Measurement circuit for detector current

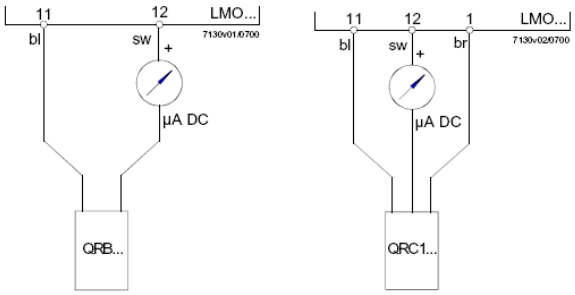

Key

µA DC DC microamperometer with an internal resistance of 5 kW max.
bl Blue
sw Black
br Brown

CIB UNIGAS

Via L.Galvani, 9 - 35011 Campodarsego (PD) - ITALY
Tel. +39 049 9200944 - Fax +39 049 9200945/9201269
web site: www.cibunigas.it - e-mail: cibunigas@cibunigas.it

Note: specifications and data subject to change without notice. Errors and omissions excepted.

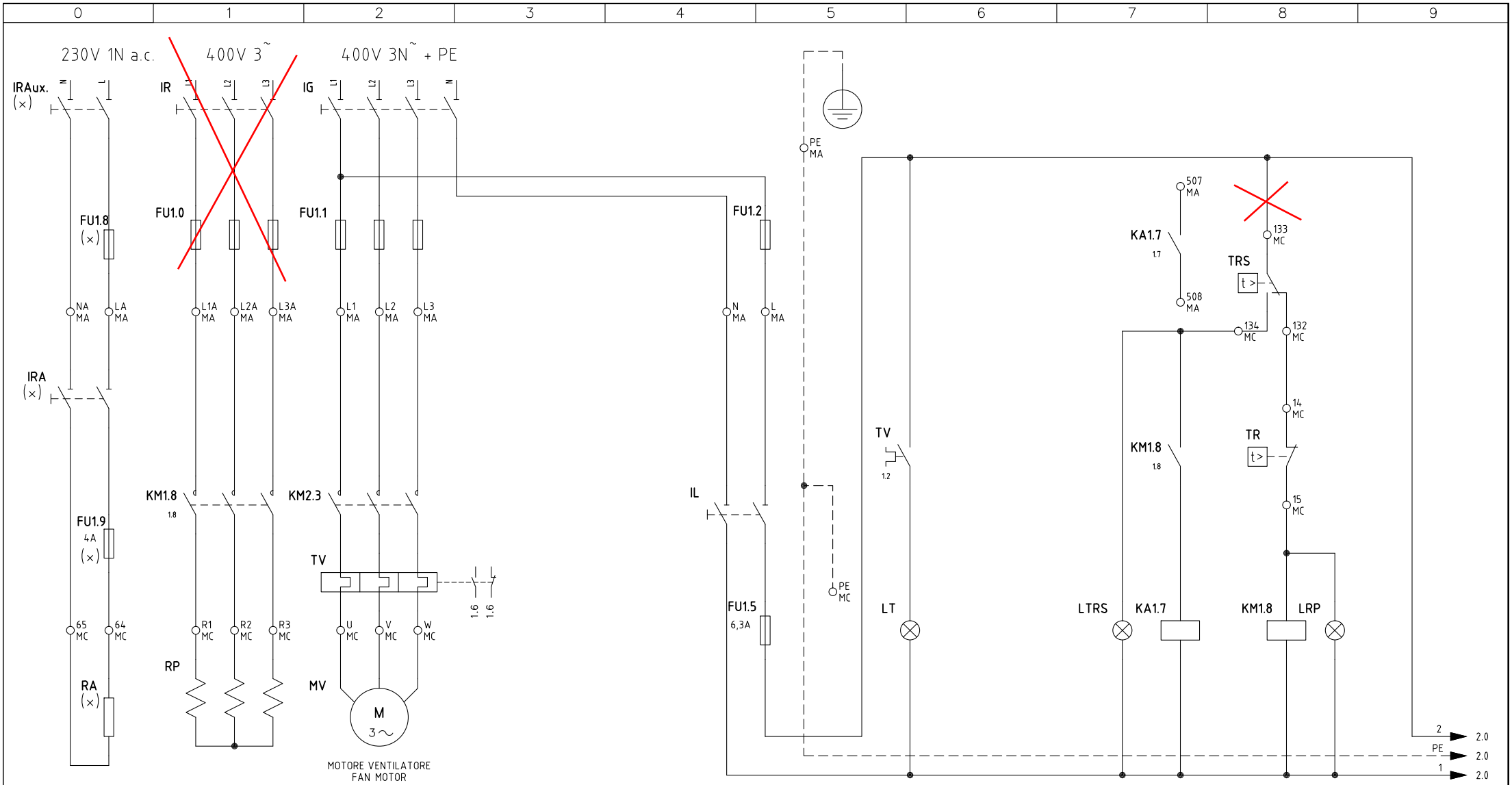

Con indicazioni per escludere le resistenze e by-passare i termostati per il funzionamento a gasolio

(x)
UTILIZZATO SOLO PER VERSIONI "NAFTA 110 cSt a 50 °C" E "NAFTA 400 cSt a 50 °C"
USED FOR "OIL 110 cSt a 50 °C " AND "OIL400 cSt a 50 °C " VERSIONS ONLY

REV.	MODIFICA	DATA	FIRME
04	AGGIUNTO/ADDED LM024.255	07/01/13	U. PINTON
03	SQN72.2A4A20 ADDED	09/03/10	U. PINTON
02	FREE CONTACT ADDED	11/01/07	U. PINTON
01	IRA AND FU1.9 ADDED	27/01/04	U. PINTON

UNIGAS

Impianto: *TIPI/TYPES PN30 /÷/ PN92*
MODELLO/MODEL x–.AB.x.xx.A

Descrizione

Ordine

Commessa

Esecutore: U. PINTON

Data Controllato: 07/01/2013

Controllato: S. MARCHETTI

Data: 08/03/2001

Revisione: 04

Dis. N. 04 – 648

PREC.: /

FOGLIO: 1

SEGUE: 2

TOTALE: 5

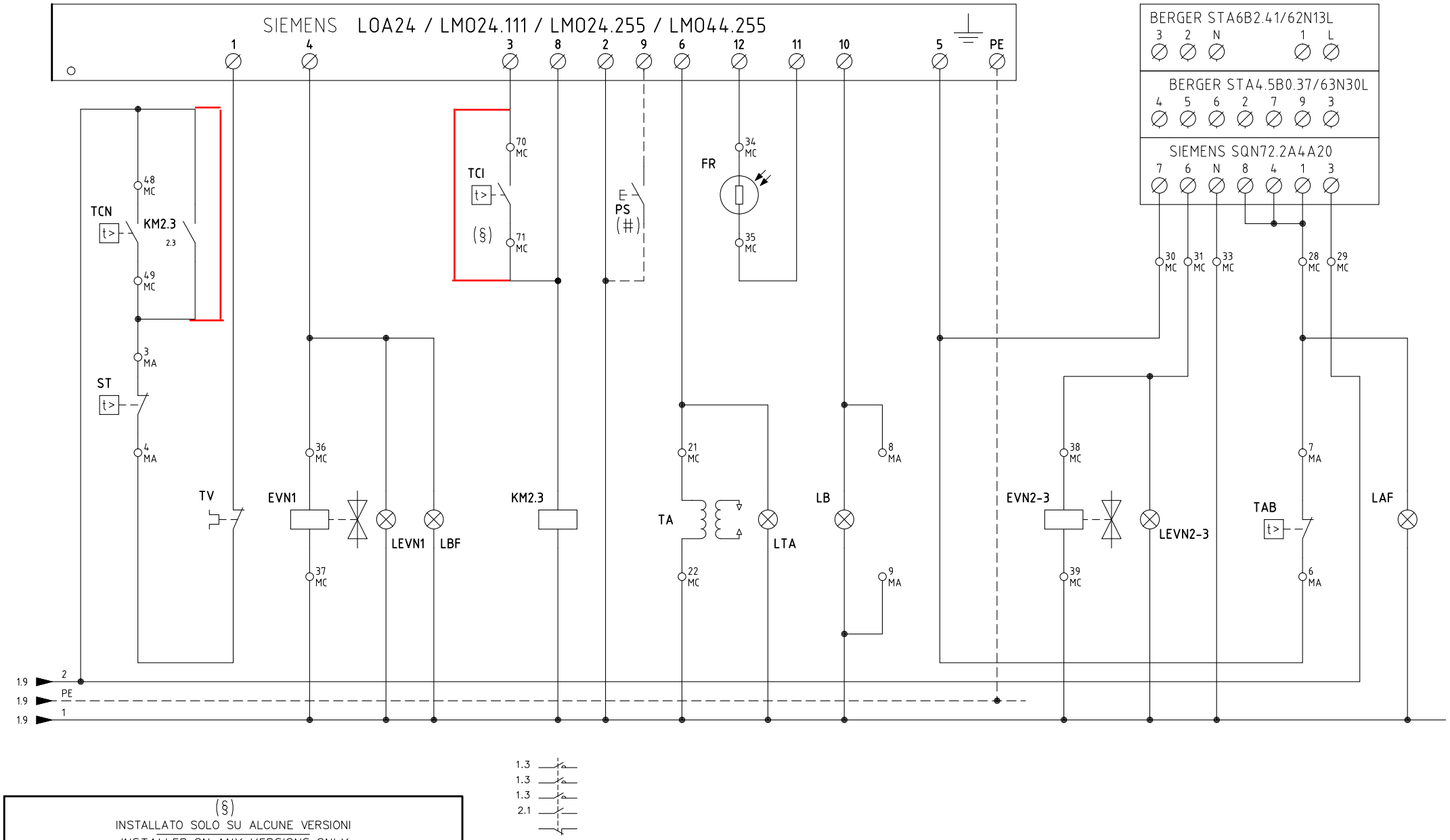

(§)
INSTALLATO SOLO SU ALCUNE VERSIONI
INSTALLED ON ANY VERSIONS ONLY

(#)
PULSANTE SBLOCCO FIAMMA (SOLO CON LMO24/LOA44/LMO44)
LOCK-OUT RESET BUTTON (LMO24/LOA44/LMO44 ONLY)

Data 08/03/2001		PREC.	FOGLIO
Revisione 04		1	2
Dis. N. 04 – 648		SEGUE	TOTALE
		3	5

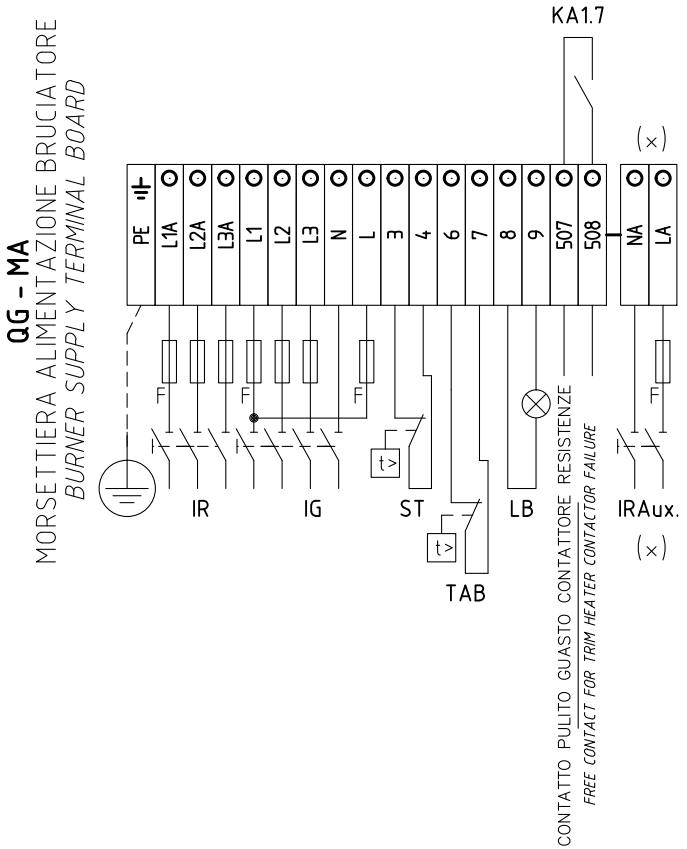

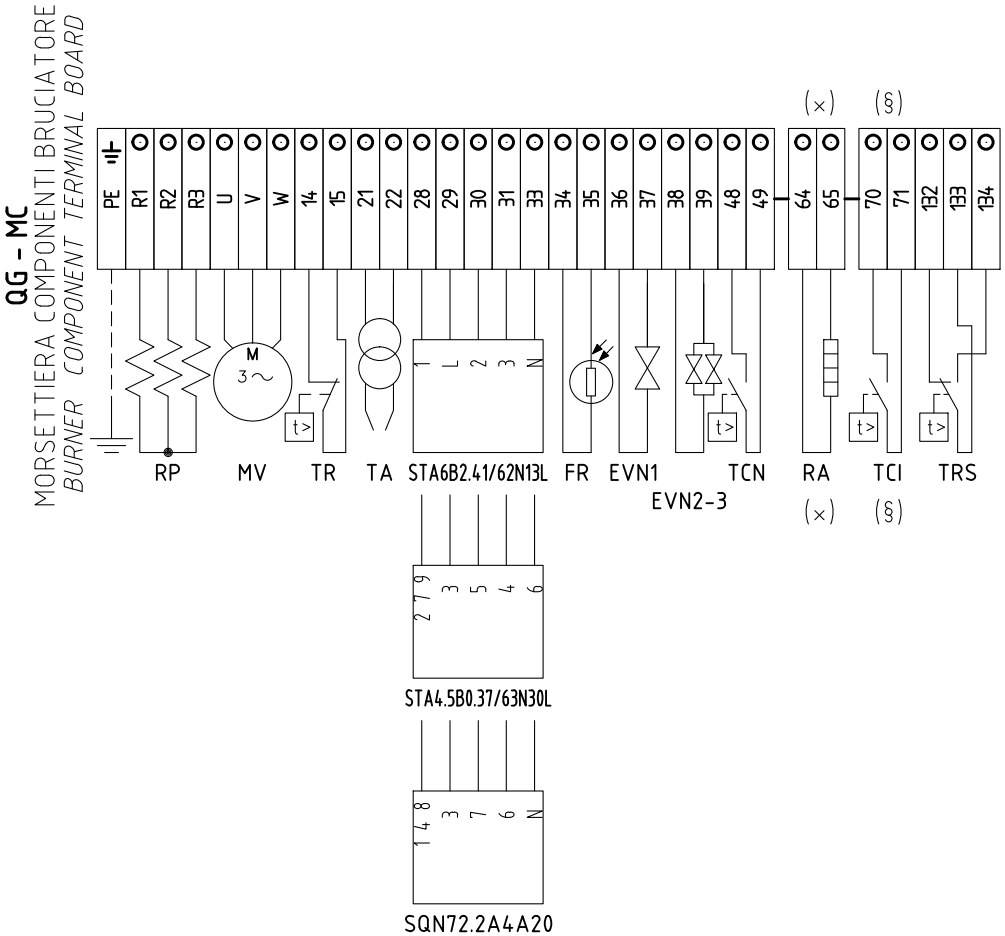

SERVOCOMANDO SERRANDA ARIA
AIR DAMPER ACTUATOR
STA4.5B0.37/63N30L

I	ALTA FIAMMA *HIGH FLAME*
II	SOSTA E ACCENSIONE *STAND-BY AND IGNITION*
III	BASSA FIAMMA *LOW FLAME*
V	APERTURA [EVN2-3] *OPENED [EVN2-3]*

SERVOCOMANDO SERRANDA ARIA (ALTERNATIVO)
AIR DAMPER ACTUATOR (ALTERNATIVE)
STA6B2.41/62N13L

ST2	ALTA FIAMMA *HIGH FLAME*
ST1	SOSTA, ACCENSIONE E BASSA FIAMMA *STAND-BY, IGNITION AND LOW FLAME*
MV	APERTURA [EVN2-3] *OPENED [EVN2-3]*

SERVOCOMANDO SERRANDA ARIA (ALTERNATIVO)
AIR DAMPER ACTUATOR (ALTERNATIVE)
SQN72.2A4A20

I (ROSSO) *I (RED)*	ALTA FIAMMA *HIGH FLAME*
II (BLU) *II (BLUE)*	SOSTA, ACCENSIONE E BASSA FIAMMA *STAND-BY, IGNITION AND LOW FLAME*
IV (NERO) *IV (BLACK)*	APERTURA [EVN2-3] *OPENED [EVN2-3]*

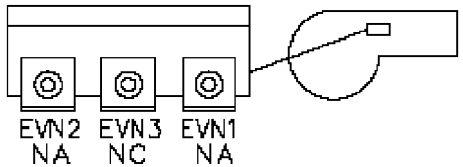

(x)
UTILIZZATO SOLO PER VERSIONI "NAFTA 110 cSt a 50 °C" E "NAFTA 400 cSt a 50 °C"
USED FOR "OIL 110 cSt a 50 °C " AND "OIL400 cSt a 50 °C " VERSIONS ONLY

(§)
INSTALLATO SOLO SU ALCUNE VERSIONI
INSTALLED ON ANY VERSIONS ONLY

Data 08/03/2001		PREC.	FOGLIO
Revisione 04		2	3
Dis. N. 04 – 648		SEGUE	TOTALE
		4	5

	SIGLA/ITEM	FOGLIO/SHEET	Funzione	FUNCTION
	BERGER STA4.5B0.37/63N30L	2	SERVOCOMANDO SERRANDA ARIA	AIR DAMPER ACTUATOR
	BERGER STA6B2.41/62N13L	2	SERVOCOMANDO SERRANDA ARIA (ALTERNATIVO)	AIR DAMPER ACTUATOR (ALTERNATIVE)
	EVN1	2	ELETTROVALVOLA NAFTA I° STADIO	OIL SOLENOID VALVE 1st STAGE
	EVN2-3	2	ELETTROVALVOLE NAFTA II° STADIO	OIL ELECTRO-VALVES II° STAGE
	FR	2	FOTORESISTENZA RILEVAZIONE FIAMMA	PHOTORESISTOR FLAME DETECTOR
	FU1.0	1	FUSIBILI LINEA PRERISCALDATORE RP	LINE PRE-HEATING RP FUSES
	FU1.1	1	FUSIBILI LINEA BRUCIATORE	BURNER LINE FUSES
	FU1.2	1	FUSIBILE LINEA AUSILIARI	AUXILIARY LINE FUSE
	FU1.5	1	FUSIBILE AUSILIARIO	AUXILIARY FUSE
(x)	FU1.8	1	FUSIBILE LINEA RESISTENZE AUSILIARIE	LINE AUXILIARY RESISTORS FUSE
(x)	FU1.9	1	FUSIBILE RESISTENZE AUSILIARIE	AUXILIARY RESISTORS FUSE
	IG	1	INTERRUTTORE GENERALE	MAINS SWITCH
	IL	1	INTERRUTTORE LINEA AUSILIARI	AUXILIARY LINE SWITCH
	IR	1	INTERRUTTORE LINEA RESISTENZE PRERISCALDATORE	PRE-HEATING RESISTORS LINE SWITCH
(x)	IRA	1	INTERRUTTORE RESISTENZE AUSILIARIE	AUXILIARY RESISTORS SWITCH
(x)	IRAux.	1	INTERRUTTORE RESISTENZE AUSILIARIE	AUXILIARY RESISTORS SWITCH
	KA1.7	1	RELE' AUSILIARIO SEGNALAZIONE GUASTO CONTATTORE RESISTENZE	AUXILIARY RELAY FOR TRIM HEATER CONTACTOR FAILURE
	KM1.8	1	CONTATTORE RESISTENZE PRERISCALDATORE [RP]	PRE-HEATING RESISTORS [RP] CONTACTOR
	KM2.3	2	CONTATTORE MOTORE VENTILATORE	FAN MOTOR CONTACTOR
	LAF	2	LAMPADA SEGNALAZIONE ALTA FIAMMA BRUCIATORE	BURNER IN HIGH FLAME INDICATOR LIGHT
	LB	2	LAMPADA SEGNALAZIONE BLOCCO BRUCIATORE	INDICATOR LIGHT FOR BURNER LOCK-OUT
	LBF	2	LAMPADA SEGNALAZIONE BASSA FIAMMA BRUCIATORE	BURNER IN LOW FLAME INDICATOR LIGHT
	LEVN1	2	LAMPADA SEGNALAZIONE APERTURA [EVN1]	INDICATOR LIGHT FOR OPENING OF ELECTRO-VALVE [EVN1]
	LEVN2-3	2	LAMPADA SEGNALAZIONE APERTURA [EVN2-3]	INDICATOR LIGHT FOR OPENING OF ELECTRO-VALVE [EVN2-3]
	LOA24 / LMO24.111 / LMO24.255 / LMO44	2	APPARECCHIATURA CONTROLLO FIAMMA	CONTROL BOX
	LRP	1	LAMPADA SEGNALAZIONE FUNZIONAMENTO PRERISCALDATORE RP	INDICATOR LIGHT FOR PRE-HEATING RESISTOR RP OPERATION
	LT	1	LAMPADA SEGNALAZIONE BLOCCO TERMICO MOTORE VENTILATORE	INDICATOR LIGHT FOR FAN OVERLOAD TRIPPED
	LTA	2	LAMPADA SEGNALAZIONE TRASFORMATORE DI ACCENSIONE	IGNITION TRANSFORMER INDICATOR LIGHT
	LTRS	1	LAMPADA SEGNALAZIONE BLOCCO TERMOSTATO DI SICUREZZA PRERISCALDATORE [RP]	INDICATOR LIGHT FOR SAFETY THERMOSTAT [RP] PRE-HEATING
(#)	MV	1	MOTORE VENTILATORE	FAN MOTOR
(x)	PS	2	PULSANTE SBLOCCO FIAMMA (SOLO CON LMO24)	LOCK-OUT RESET BUTTON (LMO24 ONLY)
	RA	1	RESISTENZE AUSILIARIE	AUXILIARY RESISTORS

(x)
UTILIZZATO SOLO PER VERSIONI "NAFTA 110 cSt a 50 °C" E "NAFTA 400 cSt a 50 °C"
USED FOR "OIL 110 cSt a 50 °C " AND "OIL400 cSt a 50 °C " VERSIONS ONLY

Data 08/03/2001	PREC.	FOGLIO
Revisione 04	3	4
Dis. N. 04 – 648	SEGUE	TOTALE
	5	5

0	1	2	3	4	5	6	7	8	9

	SIGLA/ITEM	FOGLIO/SHEET	Funzione	FUNCTION
	RP	1	RESISTENZE PRERISCALDATORE NAFTA	PRE-HEATING TANK RESISTORS
	SIEMENS SQN72.2A4A20	2	SERVOCOMANDO SERRANDA ARIA (ALTERNATIVO)	AIR DAMPER ACTUATOR (ALTERNATIVE)
	ST	2	SERIE TERMOSTATI/PRESSOSTATI	SERIES OF THERMOSTATS OR PRESSURE SWITCHES
	TA	2	TRASFORMATORE DI ACCENSIONE	IGNITION TRANSFORMER
	TAB	2	TERMOSTATO/PRESSOSTATO ALTA-BASSA FIAMMA	HIGH-LOW THERMOSTAT/PRESSURE SWITCHES
(§)	TCI	2	TERMOSTATO CONSENSO IMPIANTO	PLANT CONSENT THERMOSTAT
	TCN	2	TERMOSTATO CONSENSO NAFTA	OIL ENABLING THERMOSTAT
	TR	1	TERMOSTATO DI REGOLAZIONE PRERISCALDATORE [RP]	REGULATION THERMOSTAT FOR PRE-HEATING [RP] RESISTORS
	TRS	1	TERMOSTATO DI SICUREZZA PRERISCALDATORE [RP]	PRE-HEATING [RP] A SAFETY THERMOSTAT
	TV	1	TERMICO MOTORE VENTILATORE	FAN MOTOR THERMAL

(×)
UTILIZZATO SOLO PER VERSIONI "NAFTA 110 cSt a 50 °C" E "NAFTA 400 cSt a 50 °C"
USED FOR "OIL 110 cSt a 50 °C " AND "OIL400 cSt a 50 °C " VERSIONS ONLY

(#)
PULSANTE SBLOCCO FIAMMA (SOLO CON LMO24)
LOCK-OUT RESET BUTTON (LMO24 ONLY)

(§)
INSTALLATO SOLO SU ALCUNE VERSIONI
INSTALLED ON ANY VERSIONS ONLY

Data 08/03/2001		PREC.	FOGLIO
Revisione 04		4	5
Dis. N. 04 – 648		SEGUE	TOTALE
		/	5