LO60 - LO90

IDEA series
Light oil burners

MANUAL OF INSTALLATION - USE - MAINTENANCE

CIB UNIGAS

BURNERS - BRUCIATORI - BRULERS - BRENNER - QUEMADORES - ГОРЕЛКИ

M039136CC Rev. 2.1 06/2016

DANGERS, WARNINGS AND NOTES OF CAUTION **3**

PART I: INSTALLATION **5**

GENERAL FEATURES ***5***
Specifications *5*
MOUNTINGS AND CONNECTIONS ***8***
Handling the burner *8*
Fitting the burner to the boiler *8*
Electrical connections *9*
Identification of linking connectors *9*
Hydraulic system *10*
Bleed *10*
About the use of fuel pumps *10*
Installation diagram of light oil pipes *11*
Light oil supply pipeline sizing *11*
Pumps *12*
Connecting the light oil flexible hoses *12*
ADJUSTMENTS ***14***
Adjusting the fuel flow rate *14*
Priming the pump *15*
Priming the pump for single stage burners *15*
Priming the pump for double stage burners *16*
Adjusting the combustion head *17*

PART II: OPERATION **19**

OPERATION ***20***
Single stage burners *20*
Double stage burners *20*

PART III: MAINTENANCE **21**

ROUTINE MAINTENANCE ***21***
Light oil filter maintenance *22*
Checking the detection current *24*
Seasonal stopSeasonal stop *24*
Burner disposal *24*
TROUBLESHOOTING ***25***
BURNER EXPLODED VIEW ***26***
WIRING DIAGRAMS ***28***

APPENDIX

DANGERS, WARNINGS AND NOTES OF CAUTION

THIS MANUAL IS SUPPLIED AS AN INTEGRAL AND ESSENTIAL PART OF THE PRODUCT AND MUST BE DELIVERED TO THE USER.

INFORMATION INCLUDED IN THIS SECTION ARE DEDICATED BOTH TO THE USER AND TO PERSONNEL FOLLOWING PRODUCT INSTALLATION AND MAINTENANCE.

THE USER WILL FIND FURTHER INFORMATION ABOUT OPERATING AND USE RESTRICTIONS, IN THE SECOND SECTION OF THIS MANUAL. WE HIGHLY RECOMMEND TO READ IT.

CAREFULLY KEEP THIS MANUAL FOR FUTURE REFERENCE.

1) GENERAL INTRODUCTION

- The equipment must be installed in compliance with the regulations in force, following the manufacturer's instructions, by qualified personnel.
- Qualified personnel means those having technical knowledge in the field of components for civil or industrial heating systems, sanitary hot water generation and particularly service centres authorised by the manufacturer.
- Improper installation may cause injury to people and animals, or damage to property, for which the manufacturer cannot be held liable.
- Remove all packaging material and inspect the equipment for integrity.

In case of any doubt, do not use the unit - contact the supplier.

The packaging materials (wooden crate, nails, fastening devices, plastic bags, foamed polystyrene, etc), should not be left within the reach of children, as they may prove harmful.

- Before any cleaning or servicing operation, disconnect the unit from the mains by turning the master switch OFF, and/or through the cut-out devices that are provided.
- Make sure that inlet or exhaust grilles are unobstructed.
- In case of breakdown and/or defective unit operation, disconnect the unit. Make no attempt to repair the unit or take any direct action.

Contact qualified personnel only.

Units shall be repaired exclusively by a servicing centre, duly authorised by the manufacturer, with original spare parts.

Failure to comply with the above instructions is likely to impair the unit's safety.

To ensure equipment efficiency and proper operation, it is essential that maintenance operations are performed by qualified personnel at regular intervals, following the manufacturer's instructions.

- When a decision is made to discontinue the use of the equipment, those parts likely to constitute sources of danger shall be made harmless.
- In case the equipment is to be sold or transferred to another user, or in case the original user should move and leave the unit behind, make sure that these instructions accompany the equipment at all times so that they can be consulted by the new owner and/or the installer.
- For all the units that have been modified or have options fitted then original accessory equipment only shall be used.
- This unit shall be employed exclusively for the use for which it is meant. Any other use shall be considered as improper and, therefore, dangerous.

The manufacturer shall not be held liable, by agreement or otherwise, for damages resulting from improper installation, use and failure to comply with the instructions supplied by the manufacturer.The occurrence of any of the following circustances may cause explosions, polluting unburnt gases (example: carbon monoxide CO), burns, serious harm to people, animals and things:

- Failure to comply with one of the WARNINGS in this chapter
- Incorrect handling, installation, adjustment or maintenance of the burner
- Incorrect use of the burner or incorrect use of its parts or optional supply

2) SPECIAL INSTRUCTIONS FOR BURNERS

- The burner should be installed in a suitable room, with ventilation openings complying with the requirements of the regulations in force, and sufficient for good combustion.
- Only burners designed according to the regulations in force should be used.
- This burner should be employed exclusively for the use for which it was designed.
- Before connecting the burner, make sure that the unit rating is the same as delivery mains (electricity, gas oil, or other fuel).
- Observe caution with hot burner components. These are, usually, near to the flame and the fuel pre-heating system, they become hot during the unit operation and will remain hot for some time after the burner has stopped.

When the decision is made to discontinue the use of the burner, the user shall have qualified personnel carry out the following operations:

a Remove the power supply by disconnecting the power cord from the mains.

b) Disconnect the fuel supply by means of the hand-operated shut-off valve and remove the control handwheels from their spindles.

Special warnings

- Make sure that the burner has, on installation, been firmly secured to the appliance, so that the flame is generated inside the appliance firebox.
- Before the burner is started and, thereafter, at least once a year, have qualified personnel perform the following operations:

a set the burner fuel flow rate depending on the heat input of the appliance;

b set the flow rate of the combustion-supporting air to obtain a combustion efficiency level at least equal to the lower level required by the regulations in force;

c check the unit operation for proper combustion, to avoid any harmful or polluting unburnt gases in excess of the limits permitted by the regulations in force;

d make sure that control and safety devices are operating properly;

e make sure that exhaust ducts intended to discharge the products of combustion are operating properly;

f on completion of setting and adjustment operations, make sure that all mechanical locking devices of controls have been duly tightened;

g make sure that a copy of the burner use and maintenance instructions is available in the boiler room.

- In case of a burner shut-down, reser the control box by means of the RESET pushbutton. If a second shut-down takes place, call the Technical Service, **without trying to RESET further**.
- The unit shall be operated and serviced by qualified personnel only, in compliance with the regulations in force.

3) GENERAL INSTRUCTIONS DEPENDING ON FUEL USED

3a) ELECTRICAL CONNECTION

- For safety reasons the unit must be efficiently earthed and installed as required by current safety regulations.
- It is vital that all saftey requirements are met. In case of any doubt, ask for an accurate inspection of electrics by qualified personnel, since the manufacturer cannot be held liable for damages that may be caused by failure to correctly earth the equipment.
- Qualified personnel must inspect the system to make sure that it is adequate to take the maximum power used by the equipment shown on the equipment rating plate. In particular, make sure that the system cable cross section is adequate for the power absorbed by the unit.
- No adaptors, multiple outlet sockets and/or extension cables are permitted to connect the unit to the electric mains.
- An omnipolar switch shall be provided for connection to mains, as required by the current safety regulations.
- The use of any power-operated component implies observance of a few basic rules, for example:

  - do not touch the unit with wet or damp parts of the body and/or with bare feet;

- do not pull electric cables;
- do not leave the equipment exposed to weather (rain, sun, etc.) unless expressly required to do so;
- do not allow children or inexperienced persons to use equipment;

- The unit input cable shall not be replaced by the user.

In case of damage to the cable, switch off the unit and contact qualified personnel to replace.

When the unit is out of use for some time the electric switch supplying all the power-driven components in the system (i.e. pumps, burner, etc.) should be switched off.

3b) FIRING WITH GAS, LIGHT OIL OR OTHER FUELS

GENERAL

- The burner shall be installed by qualified personnel and in compliance with regulations and provisions in force; wrong installation can cause injuries to people and animals, or damage to property, for which the manufacturer cannot be held liable.
- Before installation, it is recommended that all the fuel supply system pipes be carefully cleaned inside, to remove foreign matter that might impair the burner operation.
- Before the burner is commissioned, qualified personnel should inspect the following:

a the fuel supply system, for proper sealing;

b the fuel flow rate, to make sure that it has been set based on the firing rate required of the burner;

c the burner firing system, to make sure that it is supplied for the designed fuel type;

d the fuel supply pressure, to make sure that it is included in the range shown on the rating plate;

e the fuel supply system, to make sure that the system dimensions are adequate to the burner firing rate, and that the system is equipped with all the safety and control devices required by the regulations in force.

- When the burner is to remain idle for some time, the fuel supply tap or taps should be closed.

SPECIAL INSTRUCTIONS FOR USING GAS

Have qualified personnel inspect the installation to ensure that:

a the gas delivery line and train are in compliance with the regulations and provisions in force;

b all gas connections are tight;

c the boiler room ventilation openings are such that they ensure the air supply flow required by the current regulations, and in any case are sufficient for proper combustion.

- Do not use gas pipes to earth electrical equipment.
- Never leave the burner connected when not in use. Always shut the gas valve off.
- In case of prolonged absence of the user, the main gas delivery valve to the burner should be shut off.

Precautions if you can smell gas

a do not operate electric switches, the telephone, or any other item likely to generate sparks;

b immediately open doors and windows to create an air flow to purge the room;

c close the gas valves;

d contact qualified personnel.

- Do not obstruct the ventilation openings of the room where gas appliances are installed, to avoid dangerous conditions such as the development of toxic or explosive mixtures.

DIRECTIVES AND STANDARDS

Gas burners

European directives

-2009/142/EC (Gas Directive)
-2014/35/UE (Low Tension Directive)
-2014/30/UE (Electromagnetic compatibility Directive)
-2006/42/EC (Machinery Directive)

Harmonized standards

-UNI EN 676 (Automatic forced draught burners for gaseous fuels)
-EN 55014-1 (Electromagnetic compatibility- Requirements for house hold appliances, electric tools and similar apparatus)
-CEI EN 60335-1 (Specification for safety of household and similar electrical appliances);
-CEI EN 60335-2 (Electrical Equipment of non-electric appliances for household and similar purposes).

Light oil burners

European directives

-2014/35/UE (Low Tension Directive)
-2014/30/UE (Electromagnetic compatibility Directive)
-2006/42/EC (Machinery Directive)

Harmonized standards

-UNI EN 267(Automatic forced draught burners for liquid fuels)
-EN 55014-1 (Electromagnetic compatibility- Requirements for house hold appliances, electric tools and similar apparatus)
-CEI EN 60335-1(Specification for safety of household and similar electrical appliances)
-CEI EN 60335-2 (Electrical Equipment of non-electric appliances for household and similar purposes).

National Standard

-UNI 7824 (Atomizing burners of the monobloc type. Characteristics and test methods)

Heavy oil burners

European Directives

-2014/35/UE (Low Tension Directive)
-2014/30/UE (Electromagnetic compatibility Directive)
-2006/42/EC (Machinery Directive)

Harmonized standards

-EN 55014-1 (Electromagnetic compatibility- Requirements for house hold appliances, electric tools and similar apparatus)
-UNI EN 267(Automatic forced draught burners for liquid fuels)
-CEI EN 60335-1 (Specification for safety of household and similar electrical appliances);
-CEI EN 60335-2 (Electrical Equipment of non-electric appliances for household and similar purposes).

Norme nazionali / National Standard

-UNI 7824 (Atomizing burners of the monobloc type. Characteristics and test methods.

Gas - Light oil burners

European Directives

-2009/142/EC (Gas Directive)
-2014/35/UE (Low Tension Directive)
-2014/30/UE (Electromagnetic compatibility Directive)
-2006/42/EC (Machinery Directive)

Harmonized standards

-UNI EN 676 (Automatic forced draught burners for gaseous fuels)
-EN 55014-1 (Electromagnetic compatibility- Requirements for house hold appliances, electric tools and similar apparatus)
-UNI EN 267(Automatic forced draught burners for liquid fuels)
-CEI EN 60335-1(Specification for safety of household and similar electrical appliances);
-CEI EN 60335-2 (Electrical Equipment of non-electric appliances for household and similar purposes).

Norme nazionali / National Standard

-UNI 7824 (Atomizing burners of the monobloc type. Characteristics and test methods.

Gas - Heavy oil burners

European directives:

-2009/142/EC (Gas Directive)
-2014/35/UE (Low Tension Directive)
-2014/30/UE (Electromagnetic compatibility Directive)
-2006/42/EC (Machinery Directive)

Harmonized standards

-UNI EN 676 (Automatic forced draught burners for gaseous fuels)

-EN 55014-1 (Electromagnetic compatibility- Requirements for house hold appliances, electric tools and similar apparatus)

-CEI EN 60335-1 (Specification for safety of household and similar electrical appliances)

-CEI EN 60335-2 (Electrical Equipment of non-electric appliances for household and similar purposes).

National Standard

- UNI 7824 (Atomizing burners of the monobloc type. Characteristics and test methods.

Industrial burners

European directives

-2009/142/EC (Gas Directive)

-2014/35/UE (Low Tension Directive)

-2014/30/UE (Electromagnetic compatibility Directive)

-2006/42/EC (Machinery Directive)

Harmonized standards

-EN 55014-1 (Electromagnetic compatibility- Requirements for house hold appliances, electric tools and similar apparatus)

-EN 746-2 (Industrial thermoprocessing equipment - Part 2: Safety requirements for combustion and fuel handling systems)

-EN 60335-2 (Electrical equipment of non-electric appliances for household and similar purposes. Safety requirements)

Burner data plate

For the following information, please refer to the data plate:

- burner type and burner model: must be reported in any communication with the supplier
- burner ID (serial number): must be reported in any communication with the supplier
- date of production (year and month)
- information about fuel type and network pressure

Type	--
Model	--
Year	--
S.Number	--
Output	--
Oil Flow	--
Fuel	--
Category	--
Gas Pressure	--
Viscosity	--
El.Supply	--
El.Consump.	--
Fan Motor	--
Protection	--
Drwaing n°	--
P.I.N.	--

SYMBOLS USED

WARNING!

Failure to observe the warning may result in irreparable damage to the unit or damage to the environment

DANGER!

Failure to observe the warning may result in serious injuries or death.

WARNING!

Failure to observe the warning may result in electric shock with lethal consequences

PART I: INSTALLATION

GENERAL FEATURES

The IDEA series burners are characterised by high performaces and width of the performance curves, when the pressure in the combustion chamber is high. They are also characterised for other important functional features: there are plugs which can be easily connected to the boiler and to the detecting probes, a pressure plug in the combustion chamber, all mechanical components are mounted on a plate which can be quickly taken off for maintenance. The head is adjustable through a graduated screw. They can be provided as Single-stage or Double-stage burners.

Single-stage: the burner operates at one output level

Double-stage: the burner operates at two output levels: high flame and low flame

Burner model identification

Burners are identified by burner type and model. Burner model identification is described as follows.

Type **LO90**	Model **G-.**	**AB.**	**S.**	***.**	**A.**
(1)	(2)	(3)	(4)	(5)	(6)

(1) BURNER TYPE	**LO60 - LO90**
(2) FUEL	**G -** Light oil **A -** Biodiesel **K** - Kerosene
(3) OPERATION(Available versions)	**TN -** Single-stage **AB -** Double-stage
(4) BLAST TUBE	**S -** Standard **L -** Extended
(5) DESTINATION COUNTRY	* - see data plate
(6) BURNER VERSION	**A -** Standard

Specifications

BURNERS		**LO60 G-.TN..**	**LO90 G-.TN..**	**LO60 G-.AB..**	**LO90 G-.AB..**
Output	min. -max. kW	30 - 60	35 - 85	25 - 60	24 - 85
Fuel		Light oil			
Light oil rate	min. -max. kg/h	2.5 - 5	3 - 7	2 - 5	2 - 7
Oil viscosity		2 - 7.4 cSt @ 40°C			
Power supply		230V 1N ~ 50Hz			
Electric motor	kW	0.1	0.1	0.1	0.1
Total power consumption	kW	0,4	0,4	0,4	0,4
Protection		IP40			
Approx. weight	kg	12	14	12	14
Operation		Single stage		Double-stage	
Operating temperature	°C	-10 ÷ +50			
Storage Temperature	°C	-20 ÷ +60			
Working service*		Intermittent			

***NOTE ON THE BURNER WORKING SERVICE:**

- Burners provided with Siemens LOA24 control box: for safety reasons, one controlled shutdown must take place every 24 hours**.**
- Burners provided with Siemens LMO24-44 control box: the control box automatically stops after 24h of continuous working. The control box immediately starts up, automatically.

⚠ **CAUTION: in case the fuel requested is biodiesel, come components must be replaced. Please, contact our Technical Dept. for further details.**

Overall dimensions (mm)

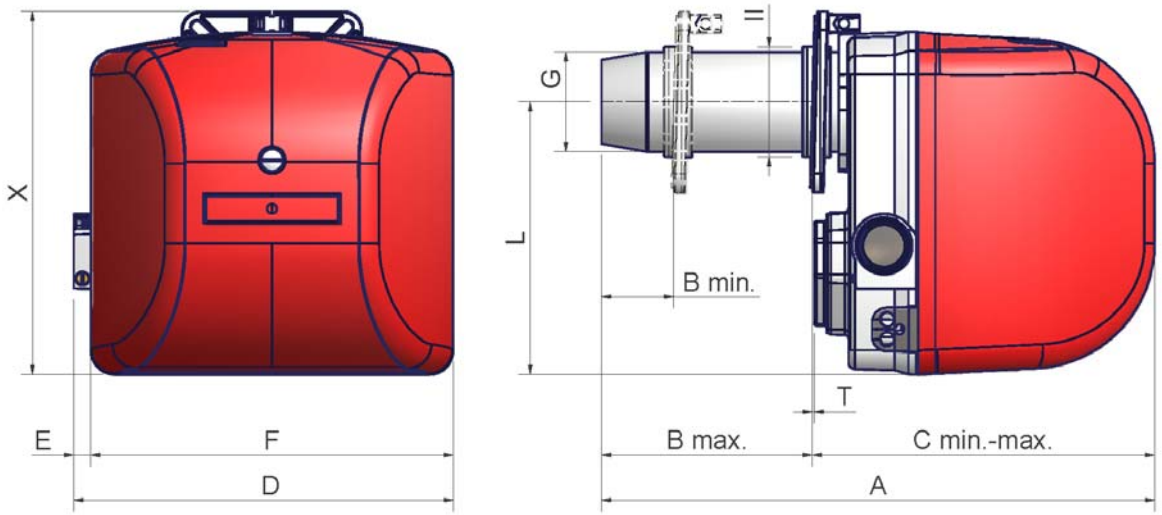

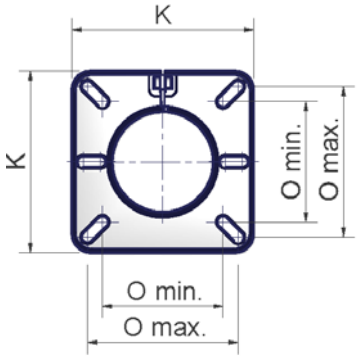

Boiler plate drilling template

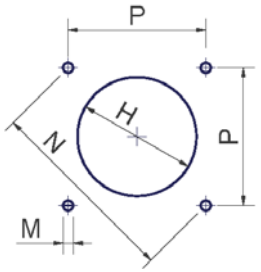

Boiler plate drilling template

		A	B		C		D	E	F	G	H	K	L	M	N	O		P	T	X
	Blast tube		**min.**	**max.**	**min.**	**max.**										**min.**	**max.**			
LO60	Standard	365	58	91	274	307	304	14	291	Ø80	Ø98	145	218	M8	153	96	120	108	2	291
LO60	Extended	443	58	169	274	385	304	14	291	Ø80	Ø98	145	218	M8	153	96	120	108	2	291
LO90	Standard	365	58	71	294	307	304	14	291	Ø80	Ø98	145	218	M8	153	96	120	108	2	291
LO90	Extended	443	58	149	294	385	304	14	291	Ø80	Ø98	145	218	M8	153	96	120	108	2	291

Performance curves

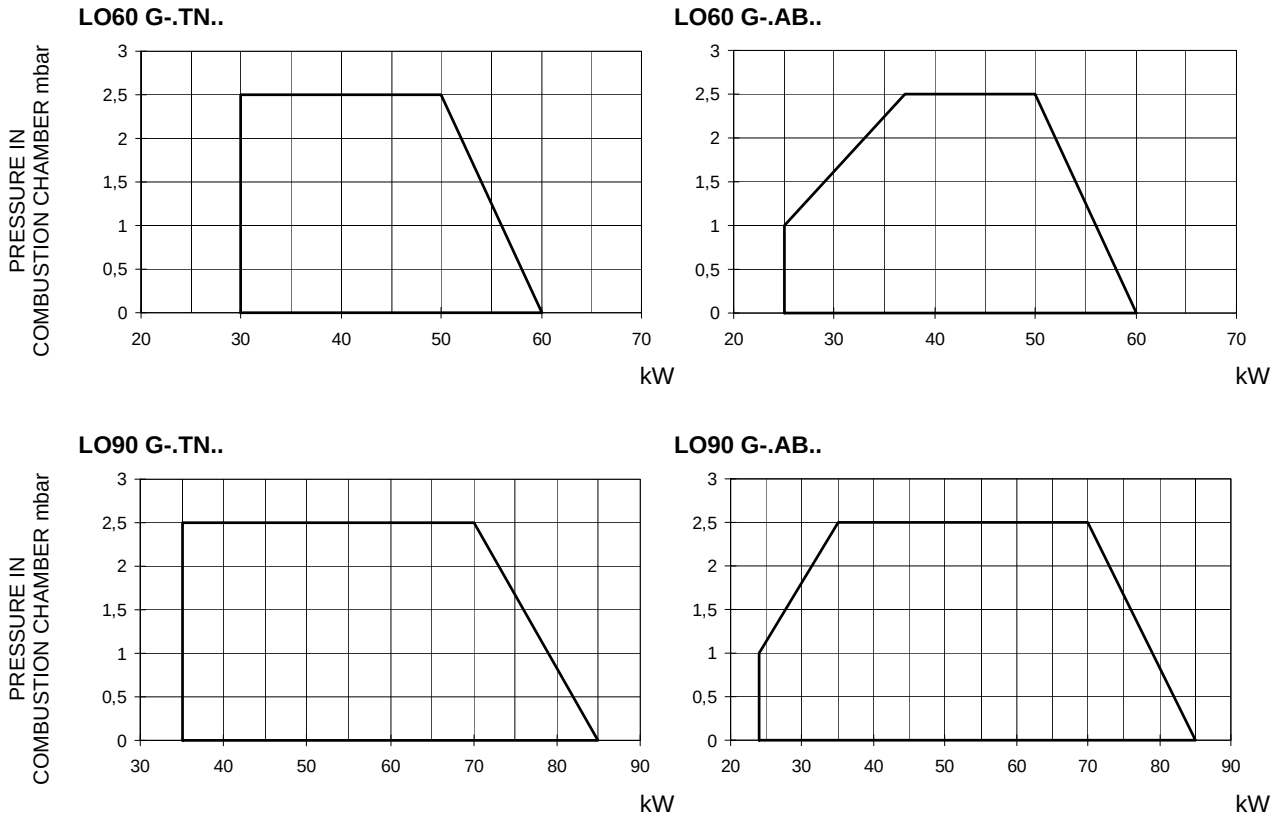

To get the input in kcal/h, multiply value in kW by 860.

Data are referred to standard conditions: atmospheric pressure at 1013mbar, ambient temperature at 15°C

MOUNTINGS AND CONNECTIONS

Packing

Burners are dispatched in cardboard pakages whose dimensions are: 400mmx300mmx520mm (LxPxH)

Packing cases of this kind are affected by humidity and are not suitable for stacking. The following are placed in each packing case.

1 burner;
2 light oil flexible hoses;
1 light oil filter;
1 gasket to be inserted between the burner and the boiler;
1 envelope containing this manual.

To get rid of the burner's packing, follow the procedures laid down by current laws on disposal of materials.

Handling the burner

⚠	**ATTENTION! The lhandling operations must be carried out by specialised and trained personnel. If these operations are not carried out correctly, the residual risk for the burner to overturn and fall down still persists.**
	To move the burner, use means suitable to support its weight (see paragraph "Technical specifications").

To lift the burner act on the points indicated by the arrows

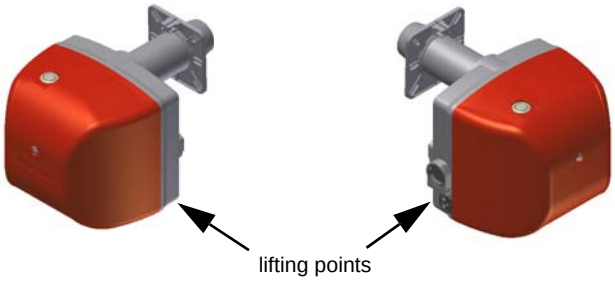

Fitting the burner to the boiler

To install the burner into the boiler, proceed as follows:

1 on the boiler's door hole, fix the 4 stud bolts according to the drilling template showed on paragraph "Overall dimensions"
2 fix the flange of the burner to the boiler;
3 install the burner into the boiler;
4 according to the reference showed on Fig. 5, fix the flange to the boiler's stud bolts **D**, without completely fastening;
5 loosen the **VS** screws in order to let the blast tube move back and forth;
6 install the burner making the blast tube move into the flange as to reach the right position according to the boiler/utilisation
7 fasten the **VS** screws:
8 tighten the 4 stud blolts **D** completely;
9 seal the space between the blast tube and the refractory lining with appropriate insulating material (ceramic fibre cord or refractory cement).

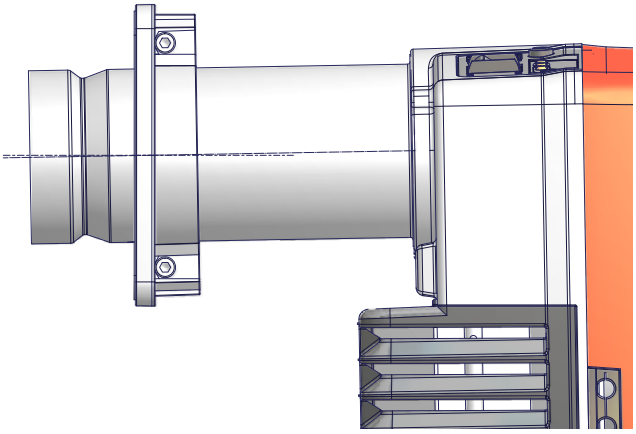

Fig. 4

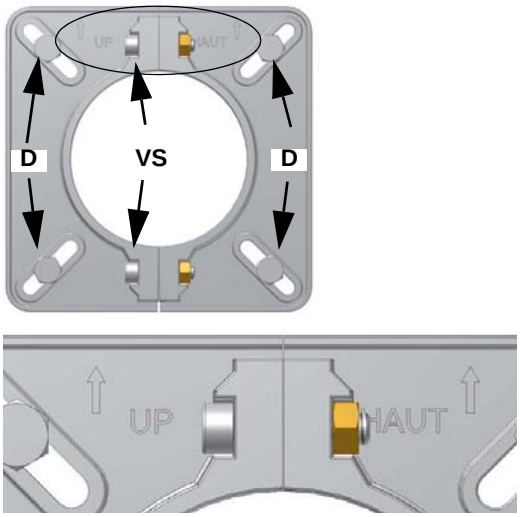

Fig. 5

Electrical connections

	Respect the basic safety rules. make sure of the connection to the earthing system. do not reverse the phase and neutral connections. fit a differential thermal magnet switch adequate for connection to the mains.
	ATTENTION: before executing the electrical connections, pay attention to turn the plant's switch to OFF and be sure that the burner's main switch is in 0 position (OFF) too. Read carefully the chapter "WARNINGS", and the "Electrical connections" section.

	WARNING: the burner is fitted with a bridge between terminals T6 and T8 on CN2-TAB connector (external side link, male connector); remove this bridge before thermostat connection.

To execute the electrical connections, proceed as follows:

1 find the plug or the plugs, according to the model:
- 7 poles plug for the power supply (for all models);
- 4 poles plug (double-stage burners);
- 3-poles plug;

2 execute the electrical connections to the plugs, according to hte burner model (see next paragraph);

3 once all the connections are accomplished, check the fan motor direction (sse next paragraphs);

4 now the burner is ready to start up.

Identification of linking connectors

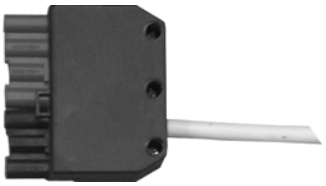

Fig. 6

Burner supply connector (**Fig. 8**)

Fig. 7

HIGH/LOW flame connector(Fig. 9)

	IMPORTANT: before operating the burner, be sure all connectors are linked as indicated in the diagrams.

- ***Double-stage burner connectors:***

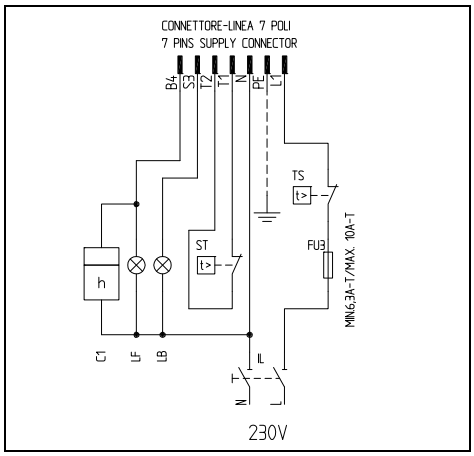

Fig. 8 - 7-poles connector

- ***Double-stage burner connectors:***

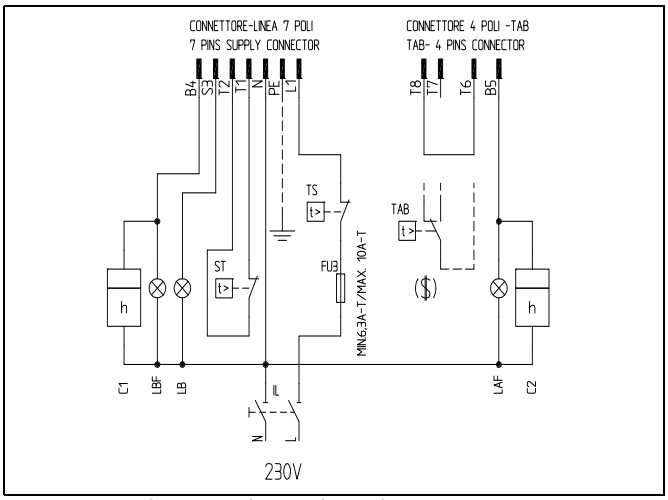

Fig. 9 7-poles and 4-poles connectors

Key

C1	LOW FLAME TIME METER
C2	HIGH FLAME TIME METER
FU1	FAN MOTOR LINE FUSE
FU3	LINE FUSE
IL	BURNER LINE SWITCH
IM	FAN MOTOR LINE SWITCH
KM1	FAN MOTOR CONTACTOR
LAF	BURNER IN HIGH FLAME INDICATOR LIGHT
LB	INDICATOR LIGHT FOR BURNER LOCK-OUT
LBF	BURNER IN LOW FLAME SIGNALLING LAMP
MV	FAN MOTOR
ST	THERMOSTATS O PRESSURE SWITCHES SERIE
TAB	HIGH LOW FLAME THERMOSTAT/PRESSURE SWITCH
TS	SAFETY THERMOSTAT/PRESSURE SWITCH

CONN-MOTORE FAN MOTOR CONNECTOR

CONN-LINEA BURNER POWER SUPPLY CONNNECTOR

CONN-TAB HIGH-LOW FLAME CONNECTOR

($) IF "TAB" USED REMOVE THE BRIDGE BETWEEN TERMINALS T6-T8

Hydraulic system

The provided pumps can be installed both into single-pipe and double-pipe systems.

Single-pipe system: a single pipe drives the oil from the tank to the pump's inlet. Then, from the pump, the pressurised oil is driven to the nozzle: a part comes out from the nozzle while the othe part goes back to the pump. In this system, the by-pass pulg, if provided, must be removed and the optional return port, on the pump's body, must be sealed by steel plug and washer.

Double-pipe system: as for the single pipe system, a pipe that connects the tank to the pump's inlet is used besides another pipe that connects the pum's return port to the tank, as well. The excess of oil goes back to the tank: this installation can be considered self-bleeding. If provided, the inside by-pass plug must be installed to avoid air and fuel passing through the pump.

Burners are factory-set for double-stage systems. They can be suited for single-pipe system (recommended in the case of gravity feed) as decribed before.

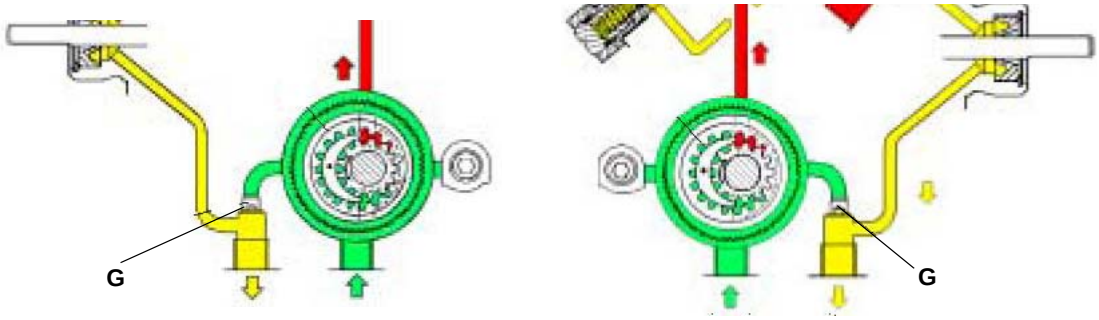

To change from a 1-pipe system to a 2-pipe-system, insert the by-pass plug **G** (as for ccw-rotation- referring to the pump shaft).

Caution: Changing the direction of rotation, all connections on top and side are reversed.

Bleed

Bleeding in two-pipe operation is automatic : it is assured by a bleed flat on the piston. In one-pipe operation, the plug of a pressure gauge port must be loosened until the air is evacuated from the system.

About the use of fuel pumps

- Make sure that the by-pass plug is not used in a single pipe installation, because the fuel unit will not function properly and damage to the pump and burner motor could result.
- Do not use fuel with additives to avoid the possible formation over time of compounds which may deposit between the gear teeth, thus obstructing them.
- After filling the tank, wait before starting the burner. This will give any suspended impurities time to deposit on the bottom of the tank, thus avoiding the possibility that they might be sucked into the pump.
- On initial commissioning a "dry" operation is foreseen for a considerable length of time (for example, when there is a long suction line to bleed). To avoid damages inject some lubrication oil into the vacuum inlet.
- Care must be taken when installing the pump not to force the pump shaft along its axis or laterally to avoid excessive wear on the joint, noise and overloading the gears.
- Pipes should not contain air pockets. Rapid attachment joint should therefore be avoided and threaded or mechanical seal junctions preferred. Junction threads, elbow joints and couplings should be sealed with removable sg component. The number of junctions should be kept to a minimum as they are a possible source of leakage.
- Do not use PTFE tape on the suction and return line pipes to avoid the possibility that particles enter circulation. These could deposit on the pump filter or the nozzle, reducing efficiency. Always use O-Rings or mechanical seal (copper or aluminium gaskets) junctions if possible.
- An external filter should always be installed in the suction line upstream of the fuel unit.

Installation diagram of light oil pipes

PLEASE READ CAREFULLY THE "WARNINGS" CHAPTER AT THE BEGINNING OF THIS MANUAL.

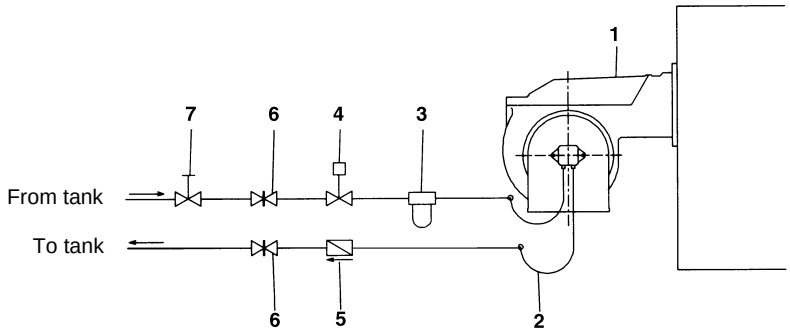

Fig. 10 - Double-pipe system

The burner is supplied with filter and flexible hoses, all the parts upstream the filter and downstream the return flexible hose, must be installed by the customer. As far as the hoses connection, see the related paragraph.

Key

1 Burner
2 Flexible hoses (fitted)
3 Light oil filter (fitted)
4 Automatic interceptor (*)
5 One-way valve (*)
6 Gate valve
7 Quick-closing gate-valve (outside the tank or boiler rooms)

(*) Only for installations with gravity, siphon or forced circulation feed systems. If the device installed is a solenoid valve, a timer must be installed to delay the valve closing.
The direct connection of the device without a timer may cause pump breaks.

Light oil supply pipeline sizing

Gravity feeding (single pipe)

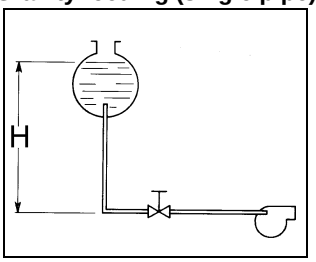

Siphon feeding (two pipes)

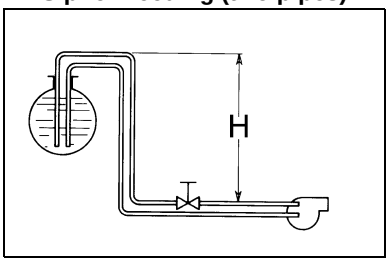

Suction feeding (two pipes)

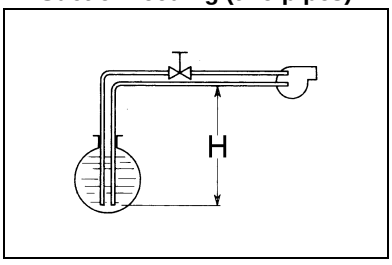

Tab. 1

H (m)	L (m)		
	Ø 6	Ø 8	Ø 10
0	41	100	100
0.5	70	100	100
1	100	100	100
1.5	100	100	100
2	100	100	100
2.5	100	100	100
3	100	100	100
3.5	100	100	100
4	100	100	100
4.5	100	100	100
5	100	100	100

Tab. 2

H (m)	L (m)			
	Ø 6	Ø 8	Ø 10	Ø 12
0	19	77	100	100
1	24	90	100	100
2	30	100	100	100
3	34	100	100	100
4	39	100	100	100
5	44	100	100	100
6	48	100	100	100
7	52	100	100	100
8	56	100	100	100
9	55	100	100	100
10	51	100	100	100

Tab. 3

H (m)	L (m)			
	Ø 6	Ø 8	Ø 10	Ø 12
0	18	73	100	100
0.5	15	66	100	100
1	13	59	100	100
1.5	10	52	100	100
2	7	44	100	100
2.5	5	44	100	100
2.5	-	37	100	100
3	-	30	85	100
3.5	-	23	68	100
4	-	-	-	100
4.5	-	-	-	-

L= Maximum pipeline lenght depending by its diameter and tank position.

Pumps

Pump Suntec AS47 A

Viscosity	2 ÷ 12 mm²/s (cSt)
Fuel temperature	0 ÷ 60 °C
Maximum inlet pressure	2 bar
Minimum inlet pressure	- 0.45 bar to avoid gasing
Maximum Return pressure	2 bar
Maximum speed	3600 rpm

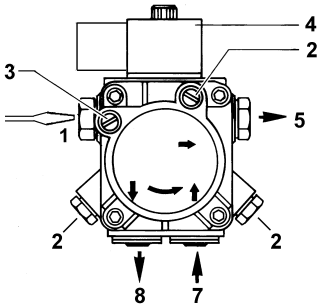

Pump Suntec AT2 45A

Viscosity range	2 ÷ 12 (cSt) mm²/s
Oil temperature max	60 °C
Maximum inlet pressure	2 bar
Minimum inlet pressure	- 0.35 bar to avoid gasing
Maximum return pressure	2 bar
Maximum speed	3600 rpm

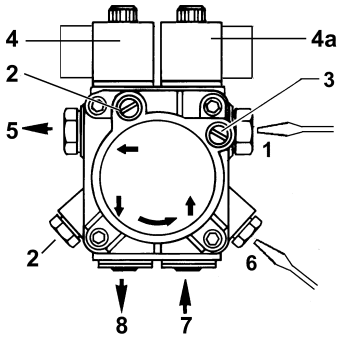

Key (Suntec AS47)

1 Pressure governor
2 Pressure gauge port G1/8
3 Vacuum gauge port G1/8
4 Solenoid valve
5 Delivery to nozzle G1/8
7 Inlet G1/4
8 Return G1/4

Key (Suntec AT2 45A)

1 Low pressure regulation (first stage)
2 Pressure gauge port G1/8
3 Vacuum gauge port G1/8
4 Light oil solenoid valve
4a High-low pressure solenoid valve
5 Delivery to nozzle G1/8
6 High pressure regulation (second stage)
7 Inlet G1/4
8 Return (with internal by-pass plug) G1/4

Connecting the light oil flexible hoses

To connect the flexible light oil hoses to the pump, proceed as follows, according to the pump provided:

- Remove the burner cover.

emove the closing nuts **A** and **R** on the inlet and return connections of the pump;

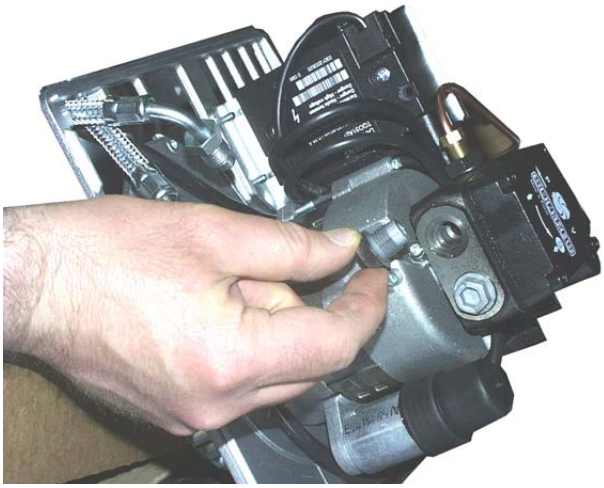

Fig. 11

screw the rotating nut of the two flexible hoses on the pump **being careful to avoid exchanging the inlet and return lines**: see the arrows marked on the pump that show the inlet and the return (see prevoius paragraph).

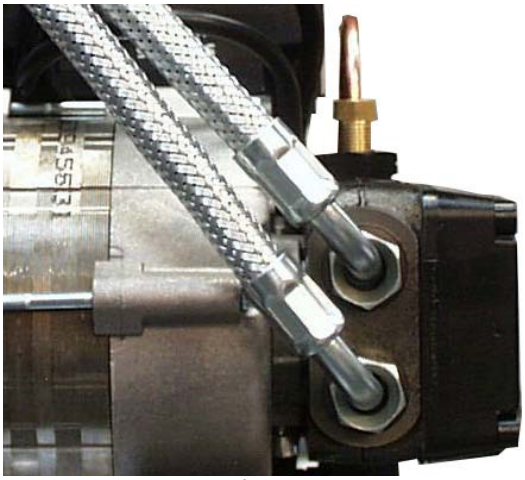

Fig. 12

Assemble the rubber seal on the flexible light oil hoses and the power cord as shown in the figure, while also re-assembling the cable-clamp plate (P in Fig. 14). 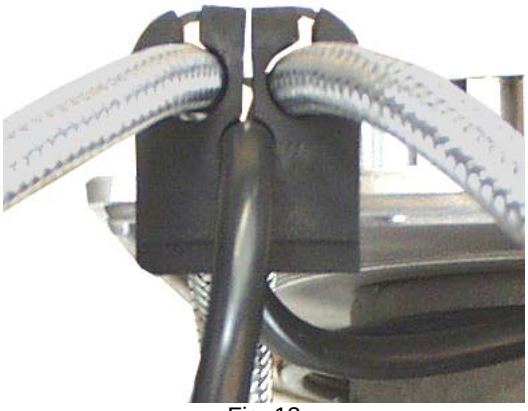 Fig. 13	Insert the rubber seal in its seat in the burner volute and fasten it in place using the V screws. 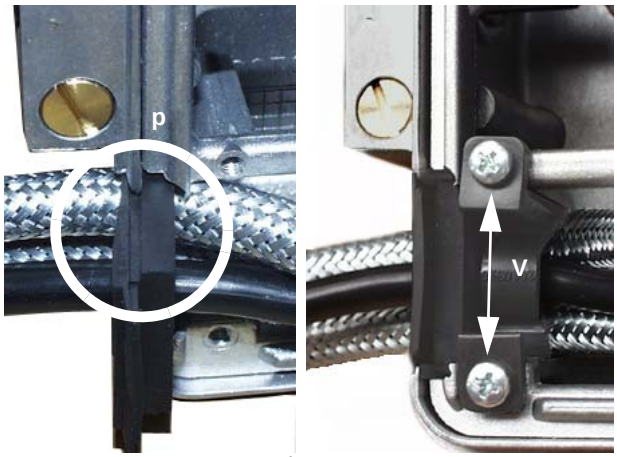 Fig. 14

- Reassemble the burner cover.

Suntec AS47 A	Suntec AT2 45
	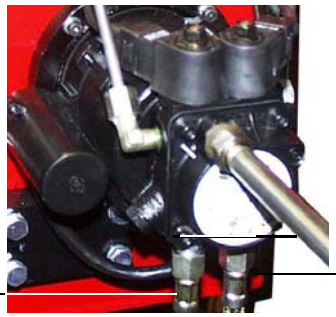

Fig. 15

ADJUSTMENTS

***ATTENTION:* before starting the burner up, be sure that the manual cutoff valves are open. Be sure that the mains switch is closed.**

Before starting up the burner, make sure that the return pipe to the tank is not obstructed. Any obstruction would cause the pump seal to break.

.***ATTENTION:*** During commissioning operations, do not let the burner operate with insufficient air flow (danger of formation of carbon monoxide); if this should happen, make the gas decrease slowly until the normal combustion values are achieved.

IMPORTANT! the combustion air excess must be adjusted according to the in the following chart:

Recommended combustion parameters		
Fuel	Recommended (%) CO_2	Recommended (%) O_2
Light oil	11.5 ÷ 13	2.9 ÷ 4.9

Adjusting the fuel flow rate

The fuel flow rate is set choosing a properly dimensioned nozzle and setting the inlet pressure on the pump (see the hydraulic diagram in .

To choose the correct nozzle refer to table Tab. 1. To set the pump pressure, see page 22. For further informations on fuel pumps, refer to the appendix..

Note: all pumps are set to 12 bar. The nozzle rate must be higher than the rate referred to the minimum burner output.

Key

EV Light oil solenoid valve

M Manometer

P Pump

The pump is set in the factory to a pressure of 12 bar.

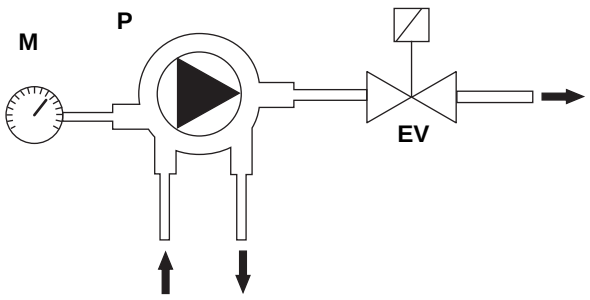

Fig. 16

GPH	10 bar			12 bar			14 bar		
	kg/h	kcal/h	kW	kg/h	kcal/h	kW	kg/h	kcal/h	kW
0.40	1.52	15.500	18	1.67	17.100	19.8	1.80	18.400	21.4
0.50	1.90	19.400	22.5	2.08	21.200	24.6	2.25	22.900	26.6
0.60	2.28	23.250	27	2.50	25.500	29.6	2.70	27.500	31.9
0.65	2.47	25.200	29.2	2.71	27.600	32	2.92	29.800	34.6
0.75	2.85	29.100	33.8	3.12	31.800	36.9	2.7	34.400	40
0.85	3.23	33.000	38.3	3.54	36.100	41.9	3.82	39.000	45.3
1.00	3.80	38.800	45	4.16	42.400	49.2	4.50	45.800	53.2
1.10	4.18	42.600	49.5	4.58	46.700	54.2	4.95	50.500	58.6
1.20	4.56	46.500	54	5.00	51.000	59.2	5.40	55.500	64.4
1.25	4.75	48.400	56.2	5.20	53.00	61.5	5.60	57.100	66.3
1.35	5.13	52.300	60.7	5.62	57.000	66.2	6.07	62.000	72
1.50	5.70	58.000	67.3	6.24	63.600	73.9	6.75	69.000	80.1
1.65	6.27	64.000	74.4	6.86	69.900	81.3	7.42	76.000	88.3
1.75	6.65	68.000	79	7.28	74.200	86.3	7.87	80.000	93

Tab. 1 - Choice of the oil nozzle- Single stage burners

Priming the pump

⚠	**Prior to start up the burner, make sure that the return pipe to the tank is not obstructed. Any obstruction would cause the pump seal to break.**

Priming the pump for single stage burners

Before carrying out the adjustment it is necessary to start up the fuel pump, proceeding as follows:

1 remove the burner cover;
2 remove the **B** coil connector on the pump (Fig. 18) to avoid light oil unexpectedly getting into the combustion chamber;
3 start the burner up by means of the control panel switch (switch it to **on**) and by means of the thermostat/pressure switches series;
4 when the EVG lamp turns to on (see chapter page 26) remove the phtoresistor **FR** (Fig. 15) from its slot and light it up;
5 bleed the air from the pressure gauge port **M**, slightly loosing its cap, without removing it (see Fig. 18);
6 turn the burner off;
7 replace the photoresistor **FR** (Fig. 15) into its slot;
8 reconnect the **B** coil connector on the pump (Fig. 18);
9 light the burner; if the burner locks, press the unlock pushbutton, placed on the upper side of the burner and repeat the steps above.
10 The oil flow rate depends on the choosen nozzle.
11 Checking the combustion values, adjust the air flow rate by means of the **V** screw(Fig. 21); the air damper position is shown on the graduated scale "I" where Point "0" stands for “ completely closed position”.
12 Replace the burner cover.

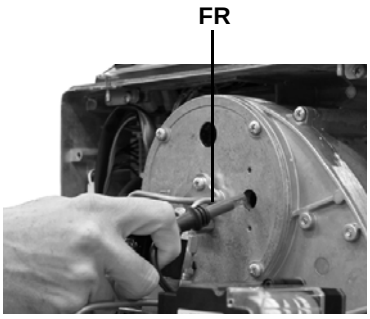

Fig. 17

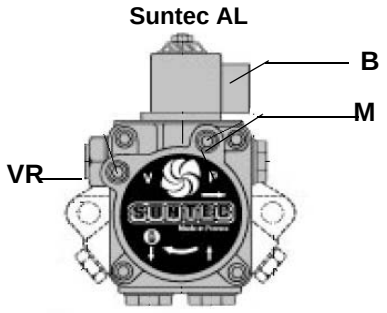

Fig. 18

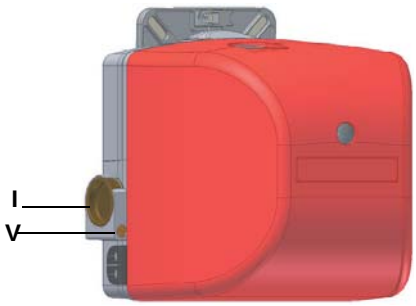

Fig. 19

Priming the pump for double stage burners

Setting the light oil pump

Adjust the ignition stage of the pump, to a pressure value of 8 - 10 bar. After 10”, the safety device switch to the second stage. The pump setting must be fixed to 24 bar, by means of the adjusting screw.

NOTE: The nozzle oil rate at a pressure of 8 bar, must be greather than the oil rate at the minimum output.

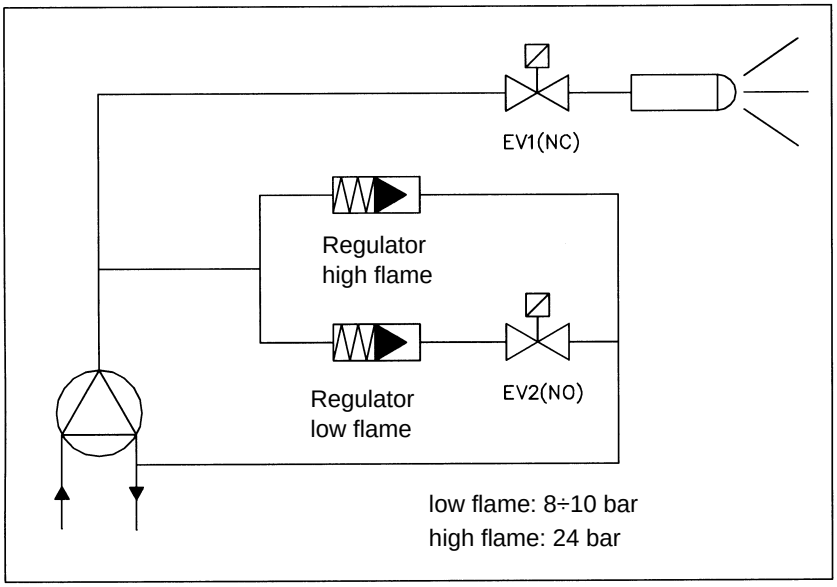

NOZZLE	PUMP PRESSURE bar																	
	8	**9**	**10**	**11**	**12**	**13**	**14**	**15**	**16**	**17**	**18**	**19**	**20**	**21**	**22**	**23**	**24**	**25**
GPH	**kg/h**																	
0.60	2.04	2.16	2.28	2.39	2.50	2.60	2.70	2.79	2.88	2.97	3.06	3.14	3.22	3.30	3.38	3.46	3.53	3.61
0.65	2.21	2.34	2.47	2.59	2.71	2.82	2.92	3.03	3.12	3.22	3.31	3.41	3.49	3.58	3.66	3.75	3.83	3.91
0.75	2.55	2.70	2.85	2.99	3.12	3.25	3.37	3.49	3.61	3.72	3.82	3.93	4.03	4.13	4.23	4.32	4.42	4.51
0.85	2.89	3.06	3.23	3.39	3.54	3.68	3.82	3.96	4.09	4.21	4.33	4.45	4.57	4.68	4.79	4.90	5.00	5.11
1.00	3.40	3.60	3.80	3.98	4.16	4.33	4.49	4.65	4.80	4.95	5.10	5.24	5.37	5.50	5.63	5.76	5.88	6.01
1.25	4.25	4.50	4.75	4.98	5.20	5.41	5.62	5.82	6.01	6.19	6.37	6.54	6.71	6.88	7.04	7.20	7.36	7.51
1.50	5.10	5.41	5.70	5.98	6.24	6.50	6.74	6.98	7.21	7.43	7.64	7.85	8.06	8.26	8.45	8.64	8.83	9.01

Tab. 2 - Choice of the oil nozzle - High-low flame burners

Before carrying out the adjustment it is necessary to start up the fuel pump, proceeding as follows:

1 remove the burner cover;
2 remove the **B** coil connector on the pump (Fig. 20) to avoid light oil unexpectedly getting into the combustion chamber;
3 start the burner up by means of the control panel switch (switch it to **on**) and by means of the thermostat/pressure switches series;
4 when the EVG lamp turns to on (see chapter page 20) remove the phtoresistor **FR** (Fig. 15) from its slot and light it up;
5 bleed the air from the pressure gauge port **M**, slightly loosing its cap, without removing it (see Fig. 20);
6 turn the burner off;
7 replace the photoresistor **FR** (Fig. 21) into its slot;
8 reconnect the **B** coil connector on the pump (Fig. 20);
9 light the burner; if the burner locks, press the unlock pushbutton, placed on the upper side of the burner and repeat the steps above.

NOTE: The oil flow rate depends on the choosen nozzle. The air rate can be adjusted by means of the air damper actuator cams (see picture below).

10 The cam that enables the second stage solenoid valve to open (EVG2 valve) must be set between the other two cams;
11 drive the burner to **high flame** by means of the thermostat **TAB** (if **TAB** is not present, insert a bridge between T6 and T8 contacts on the related connector - see page 9)
12 adjust the high flame air flow rate acting on the related cam, in order to get the right combustion values.
13 drive the burner to **low flame** by means of the thermostat **TAB** (or remove the bridge between T6 and T8 contacts on the related connector (see page 9)
14 adjust the low flame air flow rate acting on the related cam, in order to get the right combustion values.
15 Replace the actuator and burner covers.

Suntec AL	
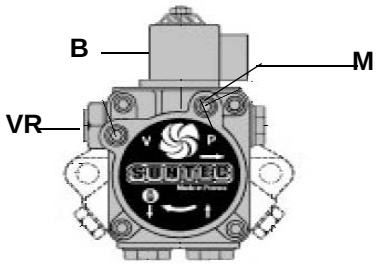	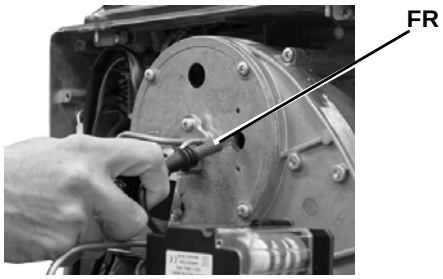
Fig. 20	Fig. 21

Refer to the next table for cams functions.

Berger STA4.5B037/4 Actuator

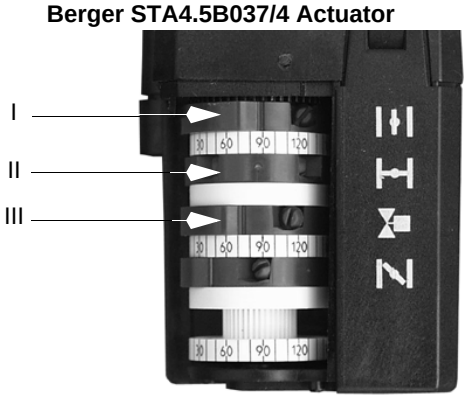

This actuator is not provided with the manual control of the air damper . The adjustment of the cams is carried out by means of a screwdriver, by twisting the screw located inside the cam.

	BERGER STA4.5BO.37
”Air adjustment in high flame” cam	I
Air adjustment in low flame - Stand-by - Ignition cam”Air adjustment in high flame” cam	II
Auxiliary cam for the opening consent to the second fuel valve”Air adjustment in high flame” cam	III

Adjusting the combustion head

The burner is set in the factory with the combustion head in the "MAX" position, corresponding to the maximum power (combustion head all-forward). To operate the burner at a lowest strenght, progressively shift back the combustion head, toward the "MIN" position, rotating the VR screw clockwise (Fig. 23).

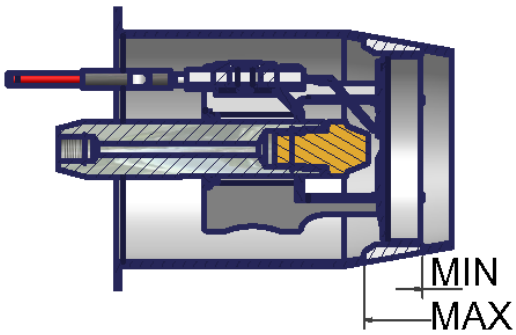

Fig. 22

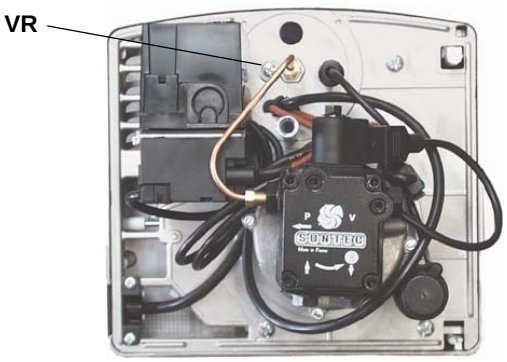

Fig. 23

Tab. 3 **- LO60**

NOZZLE G.P.H. 60°	PUMP PRESSURE bar	FLOW RATE kg/h +10%
0.60	10 - 12	2.35 - 2.60
0.75	10 - 12	3.00 - 3.30
0.85	10 - 12	3.40 - 3.85
1.00	10 - 12	3.90 - 4.20
1.10	10 - 12	4.10 - 4.50
1.20	10 - 12	4.70 - 5.20
1.35	10 - 12	5.40 - 5.80

Tab. 4 - **LO90**

NOZZLE G.P.H. 60°	PUMP PRESSURE bar	FLOW RATE kg/h +10%
1.20	10 - 12	4.80 - 5.10
1.35	10 - 12	5.35 - 5.80
1.50	10 - 12	5.95 - 6.60
1.75	10 - 12	7.00 - 7.40
2.00	10 - 12	7.80 - 8.60
2.25	10 - 12	8.90 - 9.60
2.50	10 - 12	9.40 - 10.50

PART II: OPERATION

LIMITATIONS OF USE

THE BURNER IS AN APPLIANCE DESIGNED AND CONSTRUCTED TO OPERATE ONLY AFTER BEING CORRECTLY CONNECTED TO A HEAT GENERATOR (E.G. BOILER, HOT AIR GENERATOR, FURNACE, ETC.), ANY OTHER USE IS TO BE CONSIDERED IMPROPER AND THEREFORE DANGEROUS.

THE USER MUST GUARANTEE THE CORRECT FITTING OF THE APPLIANCE, ENTRUSTING THE INSTALLATION OF IT TO QUALIFIED PERSONNEL AND HAVING THE FIRST COMMISSIONING OF IT CARRIED OUT BY A SERVICE CENTRE AUTHORISED BY THE COMPANY MANUFACTURING THE BURNER.

A FUNDAMENTAL FACTOR IN THIS RESPECT IS THE ELECTRICAL CONNECTION TO THE GENERATOR'S CONTROL AND SAFETY UNITS (CONTROL THERMOSTAT, SAFETY, ETC.) WHICH GUARANTEES CORRECT AND SAFE FUNCTIONING OF THE BURNER.

THEREFORE, ANY OPERATION OF THE APPLIANCE MUST BE PREVENTED WHICH DEPARTS FROM THE INSTALLATION OPERATIONS OR WHICH HAPPENS AFTER TOTAL OR PARTIAL TAMPERING WITH THESE (E.G. DISCONNECTION, EVEN PARTIAL, OF THE ELECTRICAL LEADS, OPENING THE GENERATOR DOOR, DISMANTLING OF PART OF THE BURNER).

NEVER OPEN OR DISMANTLE ANY COMPONENT OF THE MACHINE.

OPERATE ONLY THE MAIN SWITCH, WHICH THROUGH ITS EASY ACCESSIBILITY AND RAPIDITY OF OPERATION ALSO FUNCTIONS AS AN EMERGENCY SWITCH, AND ON THE RESET BUTTON.

IN CASE OF A BURNER SHUT-DOWN, RESET THE CONTROL BOX BY MEANS OF THE RESET PUSHBUTTON. IF A SECOND SHUT-DOWN TAKES PLACE, CALL THE TECHNICAL SERVICE, WITHOUT TRYING TO RESET FURTHER.

WARNING: DURING NORMAL OPERATION THE PARTS OF THE BURNER NEAREST TO THE GENERATOR (COUPLING FLANGE) CAN BECOME VERY HOT, AVOID TOUCHING THEM SO AS NOT TO GET BURNT.

OPERATION

- Connect voltage using the boiler's master power switch.
- Make sure that the flame control device has not shut down and reset if necessary using the reset button pressing the clear rubber seal on the burner cover.
- Make sure that the set of thermostats (or pressure-switches) triggers burner operation.
- The burner starting cycle begins: the flame control device switches on the burner's fan and the ignition transformer switches on at the same time.
- At the end of the pre-ventilation time, the light oil solenoid valve is powered and the burner ignites.
- The ignition transformer stays ON for a few seconds after the ignition of the flame (post-ignition time) and at the end of this time is switched off by the circuit.

Single stage burners

- Set the burner main switch on the burner control panel to ON position.
- Make sure that the apparatus is not in shutdown condition and if so, release by using the release button on the burner control panel.
- Make sure that the set of thermostats (or pressure-switches) enables burner operation.
- The burner starting cycle begins and the apparatus starts the burner fan while the ignition transformer switches on at the same time.
- At the end of pre-ventilation, the fuel solenoid valve receives input and the burner switches on.
- The ignition transformer remains switched on for a few seconds after the ignition of the flame (post-ignition time) after which it is disconnected from the circuit.

Double stage burners

1. Set Switch G on the burner control panel in ON position.
2. Make sure that the apparatus is not in shutdown condition and if so, release by using the release button on the burner control panel.
3. Make sure that the set of thermostats (or pressure-switches) triggers burner operation.
4. The burner starting cycle begins and the apparatus starts the burner fan while the ignition transformer switches on at the same time; pre-purge lasts for some seconds depending on the apparatus provided with the burner.
5. At the end of pre-purge, the fuel solenoid valve (1st stage, EVG1) receives input as signalled by the illumination of the signal light on the control panel and the burner starts.
6. The ignition transformer remains switched on for a few seconds after the ignition of the flame (post-ignition time), after which it is disconnected from the circuit and the corresponding signal light switches off.
7. In this way, the burner is lit at low flame; after some seconds (depending on the apparatus installed) two-stage operation begins and the burner is either automatically brought to high flame or remains burning at low flame depending on the requests received from the system. Operation at high or low flame is signalled by the illumination or switch-off of the respective signal lights A and F on the control panel; signalling light shows the opening of the solenoid valve that supplies the 2nd stage nozzle (high flame).

PART III: MAINTENANCE

At least once a year carry out the maintenance operations listed below. In the case of seasonal servicing, it is recommended to carry out the maintenance at the end of each heating season; in the case of continuous operation the maintenance is carried out every 6 months.

WARNING: ALL OPERATIONS ON THE BURNER MUST BE CARRIED OUT WITH THE MAINS DISCONNECTED AND THE FUEL MANAUL CUTOFF VALVES CLOSED!

ATTENTION: READ CAREFULLY THE "WARNINGS" CHAPTER AT THE BEGINNIG OF THIS MANUAL.

ROUTINE MAINTENANCE

- Inspection and cleaning of the light oil filter cartdrige; replace it if necessary;
- Check the overall condition of the flexible light oil hoses and make sure there are no signs of leakage;
- check and clean the filter on the fuel pump: bilter must be thoroughly cleaned at least once in a season to ensure correct working of the fuel unit. To remove the filter, unscrew the four screws on the cover. When reassemble, make sure that the filter is mounted with the feet toward the pump body. If the gasket between cover and pump housing should be damaged, it must be replaced;
- disassemble, check and clean of the combustion head. When re-assembling carefully observe the measures quoted in Fig. 29;
- check and clean the ignition electrodes and respective ceramic insulators: clean, adjust, and replace if necessary;
- Disassemble and clean the light oil nozzles.

IMPORTANT: cleaning must be performed using solvent, not metal tools!

At the end of maintenance operations after first reassembling the burner, light the flame and check its shape, replacing the nozzle whenever a questionable flame shape appears. Whenever the burner is used intensely, we recommend preventively replacing the nozzle at the start of each heating season;

- Inspect and thoroughly clean the flame detection photoresistor and replace if necessary. In case of doubt, check the detection current after first starting the burner by following the procedure shown on Fig. 30;
- Clean and grease levers and rotating parts.

Light oil filter maintenance

For correct and proper servicing, proceed as follows:

1 cutoff the required pipe section;
2 unscrew the filter cup;
3 remove the filtering cartridge, wash it with gasoline; if necessary, replace it; check the tightening O-rings and replace them if necessary;
4 replace the cup and restore the pipe line.

Removing burner components plate

Before proceeding to maintenance operations, remove the component plate of the burner "P" by unscrewing the V1, V2, V3 screws and the "F" securing pin.

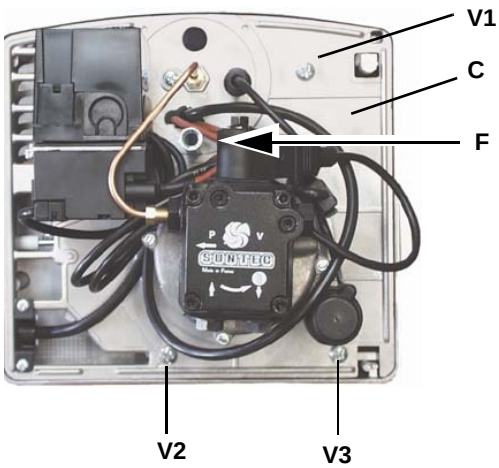

Fig. 24

1 Hang the plate in one of the ways shown in Fig. 22 and Fig. 23 in order to facilitate maintenance operations.
2 After disassembling the burner plate, the combustion head can be removed as follows:

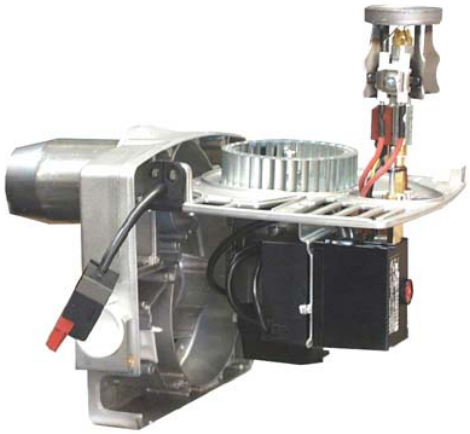

Fig. 25

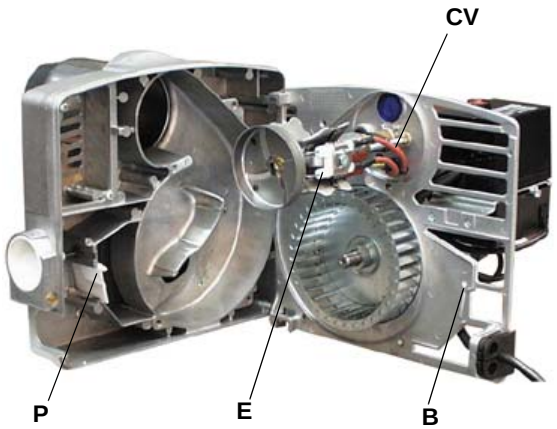

Fig. 26

Before disassembling the nozzle and the electrodes, disconnect the cables CV (Fig. 27), measure the positions quoted in Fig. 29 and make a note in the table on Tab. 6**.**

3 d disconnect the ignition cable **CV**; unscrew the fixing nuts and remove the combustion head from its housing;
4 adjust the electrodes; to replace them, if necessary, disconnect the cables and unscrew the electrodes fixing screw;
5 clean the combustion head by means of a vacuum cleaner; use a metallic brush to scrape off the scale;
6 reassemble all the items in the reversed order, observing the electrodes position (see next paragraph).

⚠ **In order to remove the nozzle, it is important to use two wrenches as shown in Fig. 25, to avoid damaging the burner component plate!**

7 Unscrew the V screw that fastens the combustion head and remove the head from the nozzle-holder (Fig. 27 - Fig. 25)

⚠ Reassemble the combustion head by respecting the position "A" measured previously, making sure to fasten the V screw (Fig. 27)

⚠ **CAUTION: the electrodes (E inFig. 23) must be placed on the combustion head side.**

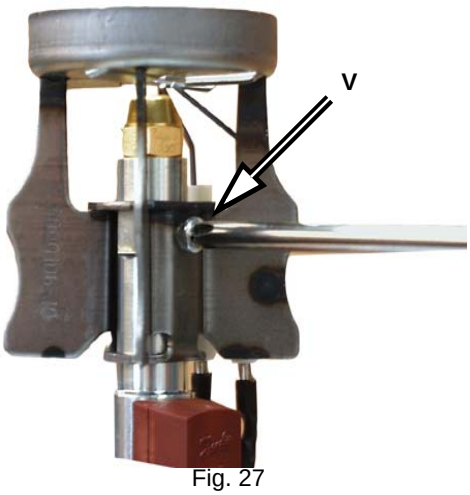

Fig. 27

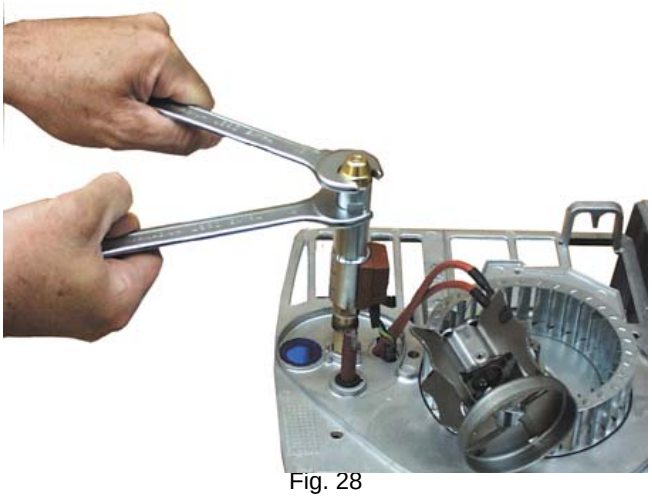

Fig. 28

8 clean or replace the nozzle;

⚠ **NOTE: while reassembling the component plate, be careful that the ari damper pin enter correctly into the slot B (see Fig. 23).**

9 reassemble tall the elements, remember to fasten the **V** and **VE** screws and re-connect the cables **CV**, observing the positions measured previously and quoted on the table;reassemble the components plate and the burner cover.

⚠	**ATTENTION:** avoid the electrodes to get in touch with metallic parts (blast tube, head, etc.), otherwise the boiler operation would be compromised. Check the electrodes position after any intervention on the combustion head.

⚠ **Before disassembling the nozzle, measure the real position “A” (see Fig. 29) and make a note in the table below.**

Tab. 5	NOZZLE	A
Position “A” set in the factory (Fig. 29), mm	60°	4
	45°	6
Measurement of real “A” position, mm	60°	.....
	45°	.....

ATTENTION: check that the factory-set values are observed (Tab. 5). If it was necessary to change that values according to the utilisation, make a note of them in the table above, as for the maintenance operations.

	NOZZLE	A	B	C	D
LO60	60°	6	4	4	6
LO90	45°	10	5	4	6

Tab. 6

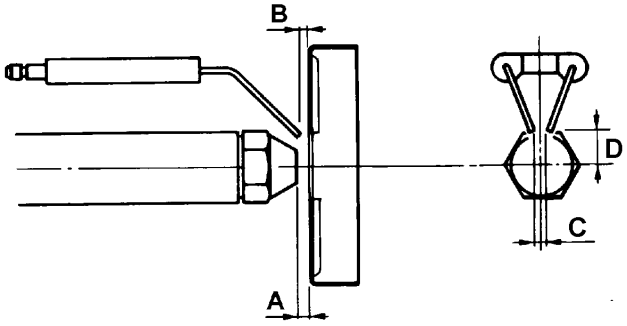

Fig. 29

Checking the detection current

To measure the detection signal follow the diagram on the next picture.

If the signal is not in the advised range, check the electrical contacts, the cleaning of the combustion head, the position of the photoresistor and if necessary replace it.

Minimum current intensity with flame	65 µA
Maximum current intensity without flame	5 µA
Maximum possible current intensity with flame	200 µA

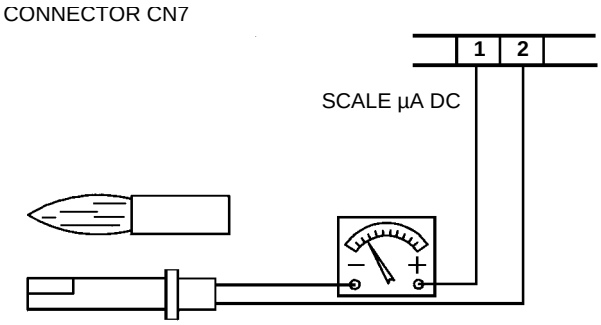

Fig. 30

Seasonal stopSeasonal stop

To stop the burner in the seasonal stop, proceed as follows:

1 turn the burner's main switch to 0 (Off position)
2 disconnect the power mains
3 close the fuel valve in the supply line.

Burner disposal

In case of disposal, follow the instructions according to the laws in force in your country about the "Disposal of materials".

TROUBLESHOOTING

	BURNER DOESN'T START	REPETITION OF PRE-PURGE	NOISY FUEL PUMP	BURNER DOESN'T START AND LOCKS	BURNER STARTS AND LOCKS	BURNER DOESN'T SWITCH TO HIGH FLAME	BURNER LOCK DURING OPERATION	BURNER LOCKS AND REPEATS CYCLE DURING OPERATION
MAINS SWITCH OPEN	●							
FUSES INTERVENTION	●							
MAXIMUM PRESSURE SWITCH FAULT	●							●
AUXILIARIES RELAY FUSES INTERVEN-TION	●							
CONTROL BOX FAULT	●	●		●	●		●	
SERVOCONTROL FAULT						●		
SMOKY FLAME					●		●	
IGNITION TRANSFORMER FAULT				●				
IGNITION ELECTRODES DIRTY OR BAD POSITION				●				
DIRTY NOZZLE				●				
FUEL SOLENOID VALVE DEFECTIVE				●			●	
PHORESISTANCE DIRTY OR DEFEC-TIVE					●		●	
HIGH - LOW FLAME THERMOSTAT DEFECTIVE						●		
BAD POSITION OF SERVOCONTROL CAMS						●		
FUEL LOW PRESSURE				●				
FUEL FILTERS DIRTY			●	●			●	

BURNER EXPLODED VIEW

ITEM	QTY	DESCRIPTION
1	1	AIR DAMPER INDEX
2	1	BLAST TUBE
3.1	1	COVER FIXING SCREW
3.2	1	COVER
3.3	1	RUBBER COVER FOR PUSH-BUTTON
4	1	BURNER FLANGE
5.1	1	AIR INTAKE
5.2	1	FAIRLEAD
5.3	1	BURNER HOUSING
5.4	1	SPACER
5.5	1	GRANO
6	1	GASKET
7	1	AIR DAMPER ADJUSTING SCREW
8	1	DAMPER SHAFT
9.1	1	NUT
9.2	1	FAIRLEAD
9.3	1	AIR INTAKE DAMPER
9.4	1	MOTOR SUPPORT PLATE
9.5	1	FAIRLEAD
9.6	1	CONTROL BOX
9.7	1	FAN WHEEL
9.8	1	MOTOR
9.9	1	PIN
9.10	1	INSPECTION GLASS
9.11	1	PHOTORESISTOR
9.12	1	COUPLING
9.13	1	PUMP
9.14	1	PUMP PIPE
9.15.1	1	CONTROL BOX SOCKET
9.15.2	1	TRANSFORMER
9.15.3	1	BRACKET
9.16	1	SCREW
9.17	1	NUT
10.1	1	COMBUSTION HEAD
10.2	1	NOZZLE HOLDER
10.3	1	IGNITION ELECTRODE
10.4	1	NOZZLE
11	2	IGNITION CABLES

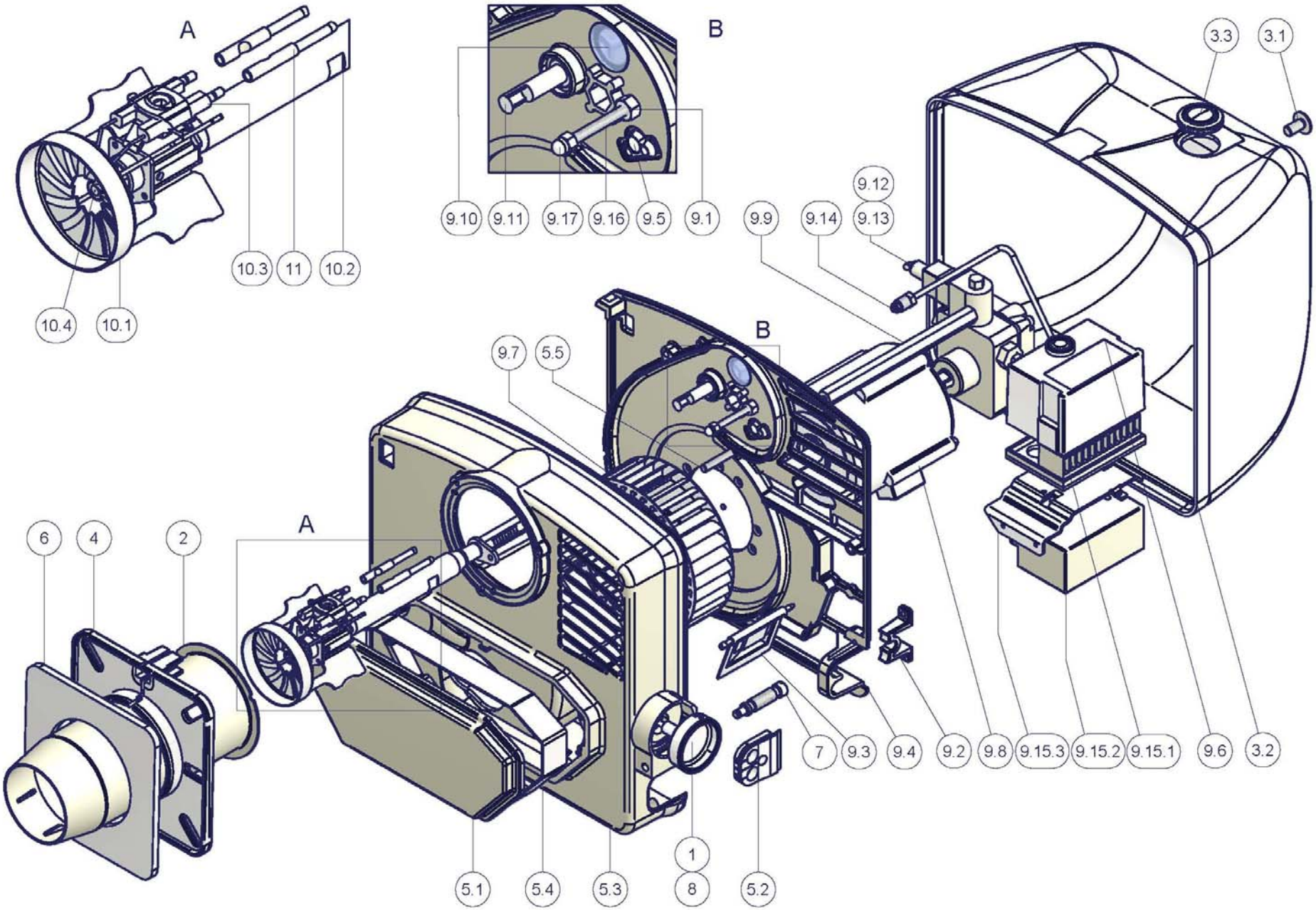
A
B
B
A
10.4
10.1
10.3
11
10.2
9.10
9.11
9.17
9.16
9.5
9.1
9.9
9.14
9.12
9.13
3.3
3.1
9.7
5.5
6
4
2
7
9.3
9.4
9.2
9.8
9.15.3
9.15.2
9.15.1
9.6
3.2
5.1
5.4
5.3
1
8
5.2

WIRING DIAGRAMS

Wiring Diagrams - Complete key

CO Time counter
C1 Time counter - low flame
C2 Time counter - high flame
EVG1 Low flame solenoid valve
EVG2 High flame solenoid valve
EVG Light oil solenoid valve
F-FU3Fuse
FR Photoresistor
IL-IG Line switch
LAF1 High flame operation signalling lamp
LBF1 Low flame operation signalling lamp
L1 Phase
LF Burner in operation signaling lamp
LB Burner lockout signaling lamp
LOA24/LMO24Flame control device SIEMENS
MA Burner power supply terminal board
MV Fan motor
SATRONIC DKO976 - DKW976 - DKW976
Contrl box
N Neutral
ST Thermostats or pressure switches
STA4.5B0.37/63N21L Air damper actuator
TA Ignition transformer
TS Thermostat / pressure switch on boiler
TAB High-Low flame thermostat (if fitted, remove the bridge between terminals T6 and T8

($) If fitted remove the bridge between terminals T6-T8

ACTUATOR CAMS

BERGER
STA4.5B0.37

I	high flame
II	stand by, ignition and low flame
III	EVG2 opening

ATTENTION
1 - Power supply 230V 50Hz 1N a.c.
2 - Don’t reverse phase with neutral
3 - Ensure the burner is properly hearthed

Wiring diagram cod. 01-361 - Single stage burners

Wiring diagram 18-072 - High-Low flame burners

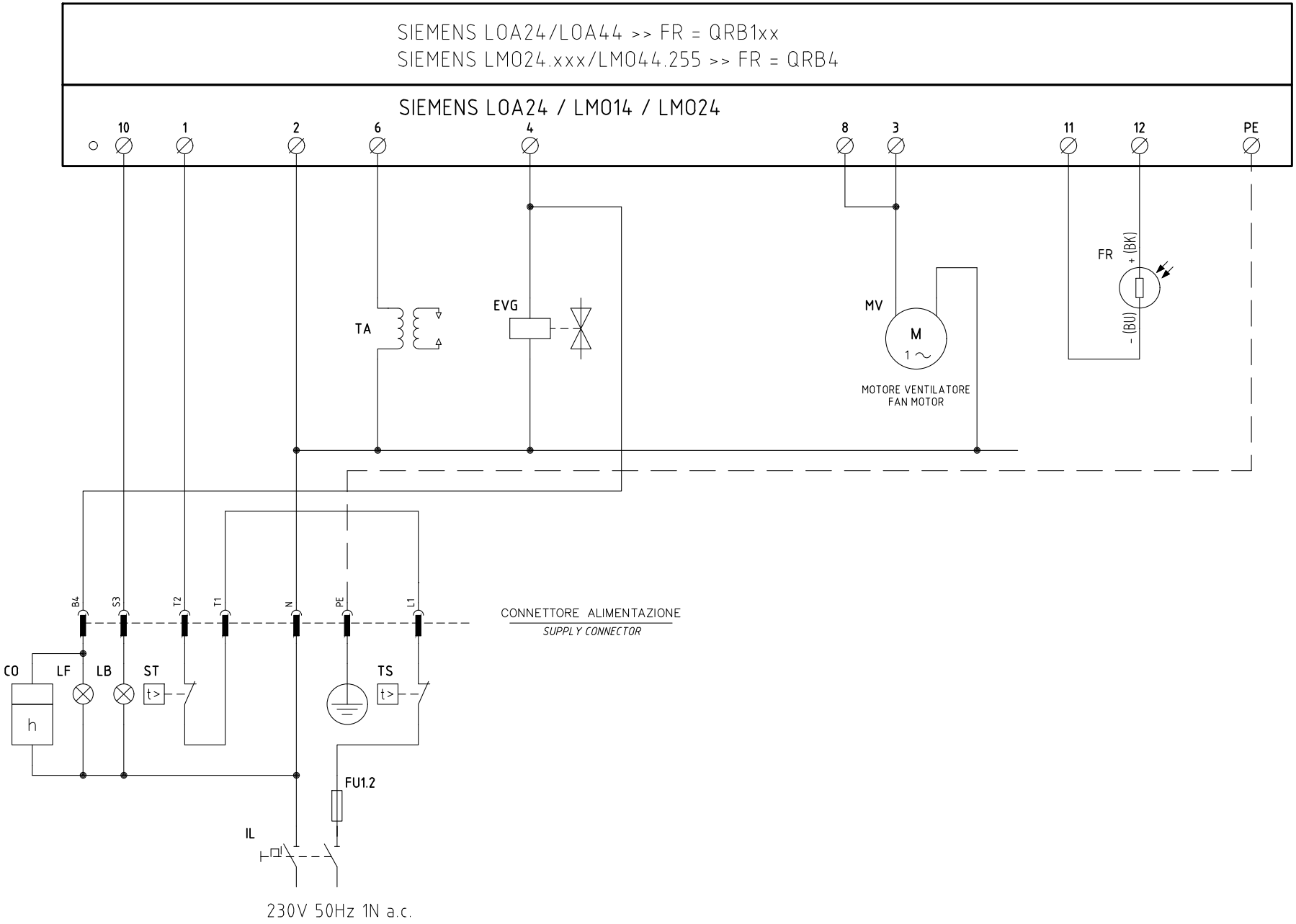

Data 13/05/1997		PREC.	FOGLIO
Revisione 03		/	1
Dis. N. 01 – 0361		SEGUE	TOTALE
		2	2

0	1	2	3	4	5	6	7	8	9

Sigla/Item	Funzione	Function
CO	CONTAORE DI FUNZIONAMENTO (OPTIONAL)	OPERATION TIME COUNTER (OPTIONAL)
EVG	ELETTROVALVOLA GASOLIO	LIGHT OIL SOLENOID VALVE
FR	SONDA RILEVAZIONE FIAMMA	FLAME DETECTOR PROBE
FU1.2	FUSIBILE DI LINEA	LINE FUSE
IL	INTERRUTTORE GENERALE	MAINS SWITCH
LB	LAMPADA SEGNALAZIONE BLOCCO BRUCIATORE	INDICATOR LIGHT FOR BURNER LOCK-OUT
LF	LAMPADA SEGNALAZIONE FUNZIONAMENTO BRUCIATORE	INDICATOR LIGHT BURNER OPERATION
MV	MOTORE VENTILATORE	FAN MOTOR
SIEMENS LOA... / LMO...	APPARECCHIATURA CONTROLLO FIAMMA	CONTROL BOX
ST	SERIE TERMOSTATI/PRESSOSTATI	SERIES OF THERMOSTATS OR PRESSURE SWITCHES
TA	TRASFORMATORE DI ACCENSIONE	IGNITION TRANSFORMER
TS	TERMOSTATO/PRESSOSTATO DI SICUREZZA	SAFETY THERMOSTAT OR PRESSURE SWITCH

Data 13/05/1997		PREC.	FOGLIO
Revisione 03		1	2
Dis. N. 01 – 0361		SEGUE	TOTALE
		/	2

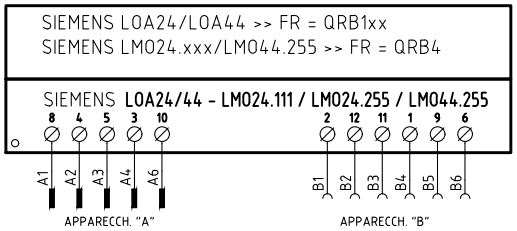

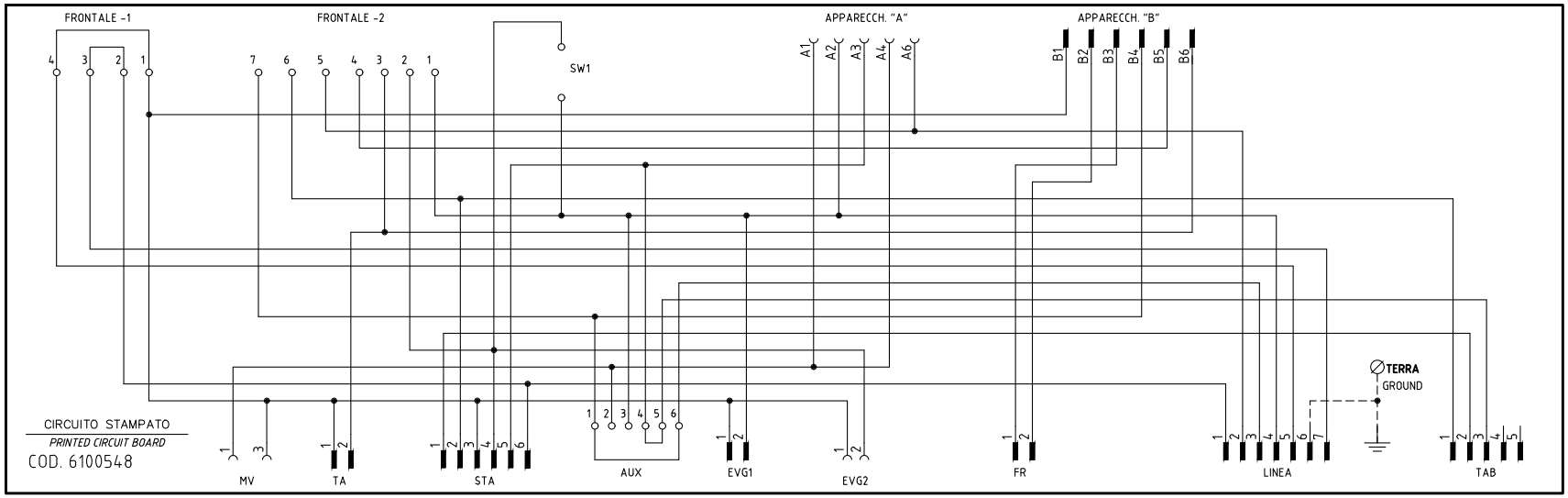

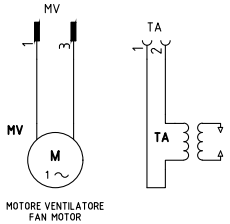

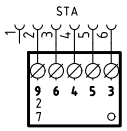

STA4.5B0.37/63N30L

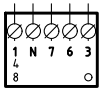

SQN72.2A4A20

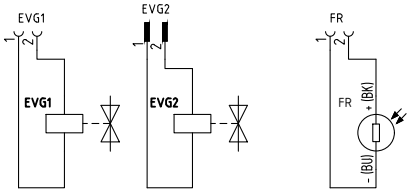

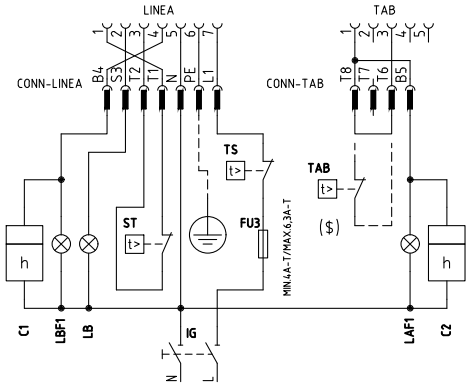

SERVOCOMANDO SERRANDA ARIA

AIR DAMPER SERVO CONTROL

STA4.5B0.37/63N30L

I	ALTA FIAMMA *HIGH FLAME*
II	SOSTA, ACCENSIONE E BASSA FIAMMA *STAND-BY, IGNITION AND LOW FLAME*
III	APERTURA EVG2 *OPEN EVG2*

SERVOCOMANDO SERRANDA ARIA (ALTERNATIVO)

AIR DAMPER ACTUATOR (ALTERNATIVE)

SQN72.2A4A20

I (ROSSO) *I (RED)*	ALTA FIAMMA *HIGH FLAME*
II (BLU) *II (BLUE)*	SOSTA, ACCENSIONE E BASSA FIAMMA *STAND-BY, IGNITION AND LOW FLAME*
IV (NERO) *IV (BLACK)*	APERTURA EVG2 *OPEN EVG2*

($) SE PREVISTO "TAB", TOGLIERE IL PONTE TRA I MORSETTI T6-T8
IF "TAB" USED REMOVE THE BRIDGE BETWEEN TERMINALS T6-T8

Data	27/10/2004	PREC.	FOGLIO
Revisione	04	/	1
Dis. N.	18 – 0072	SEGUE	TOTALE
		2	2

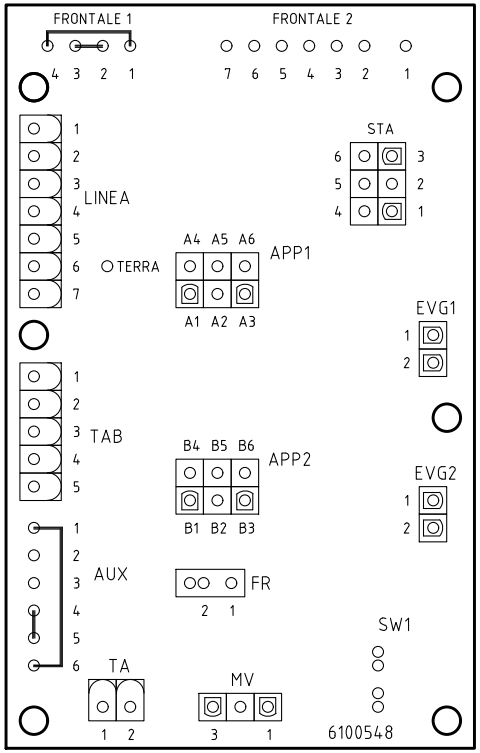

Sigla/Item	Funzione	Function
C1	CONTAORE BASSA FIAMMA	LOW FLAME TIME METER
C2	CONTAORE ALTA FIAMMA	HIGH FLAME TIME METER
EVG1	ELETTROVALVOLA GASOLIO BASSA FIAMMA	LOW FLAME LIGHTOIL ELECTRO-VALVE
EVG2	ELETTROVALVOLA GASOLIO ALTA FIAMMA	HIGH FLAME LIGHT OIL ELECTRO-VALVE
FR	SONDA RILEVAZIONE FIAMMA	FLAME DETECTOR PROBE
FU3	FUSIBILE LINEA BRUCIATORE	BURNER LINE FUSE
IG	INTERRUTTORE GENERALE	MAIN DISCONNECTOR
LAF1	LAMPADA SEGNALAZIONE ALTA FIAMMA BRUCIATORE	BURNER IN HIGH FLAME INDICATOR LIGHT
LB	LAMPADA SEGNALAZIONE BLOCCO BRUCIATORE	INDICATOR LIGHT FOR BURNER LOCK-OUT
LBF1	LAMPADA SEGNALAZIONE BASSA FIAMMA BRUCIATORE	BURNER IN LOW FLAME INDICATOR LIGHT
LOA24/44 - LMO24.111 / LMO24.255 / LMO44.255	APPARECCHIATURA CONTROLLO FIAMMA	FLAME MONITOR DEVICE
MV	MOTORE VENTILATORE	FAN MOTOR
SQN72.2A4A20	SERVOCOMANDO SERRANDA ARIA (ALTERNATIVO)	AIR DAMPER SERVO CONTROL
ST	SERIE TERMOSTATI/PRESSOSTATI	SERIES OF THERMOSTATS OR PRESSURE SWITCHES
STA4.5B0.37/63N30L	SERVOCOMANDO SERRANDA ARIA	AIR DAMPER SERVO CONTROL
TA	TRASFORMATORE DI ACCENSIONE	IGNITION TRANSFORMER
TAB	TERMOSTATO/PRESSOSTATO ALTA-BASSA FIAMMA	HIGH-LOW THERMOSTAT/PRESSURE SWITCHES
TS	TERMOSTATO/PRESSOSTATO DI SICUREZZA	SAFETY THERMOSTAT OR PRESSURE SWITCH

Data 27/10/2004		PREC. 1	FOGLIO 2
Revisione 04			
Dis. N. 18 – 0072		SEGUE /	TOTALE 2

SIEMENS OIL BURNERS AUTOMATIC CONTROLLER LOA24

Use

LOA... safety devices are intended for use solely with QRB... photoresistors, for lighting and controlling low capacity forced air light oil burners with max. capacity 30 kg/h in accordance with standard DIN 4787.

The One or two flamess are lit through electrical connections with or without post-ignition.

To replace LAI... AND LAB.. WITH LOA...

LOA... models can be used as replacement for LAI... and LAB.. controllers by means of the adapter KF8819 and without the need to change the electrical wiring. Because the LOA is smaller in dimensions, when it is used with the adapter the external dimensions are almost identical, which means that there is no need to move the reset button.

Performance

The controllers just need plugging in, so they can be mounted in almost any position: on the burner, on the electrical panel or on the control panel. The casing is made of robust heat-resistant plastic and contains:

- the thermic programmer operating a multiple switch control system with ambient temperature compensator
- flame signal amplifier with flame relay
- warning light indicating lockout and associated sealed reset button.

The plug-in socket, also made of robust heat-resistant plastic, contains the 12 terminals and also:

- 3 neutral terminals, ready wired up to terminal 2
- 4 earth terminals for earthing the burner
- 2 supplementary terminals numbered “31” and “32”.

The socket has two openings at the bottom for the leads; 5 others with threaded connection for cable holders PG11 or 3/4UNP for non-metallic sleeves are located on a mobile stuffing box, one on either side and 3 on the front.

There are two flexible metal tongues on the sides of the socket for mounting.

To dismantle it only requires gentle pressure with a screw driver in the slot of the mounting guide. The base dimensions of the socket are exaclty the same as for types LAB/LAI and there is no difference in the diameter of the reset button, the two mounting screws and the flange of the burner earth.

Safety at low voltage levels

Safety devices against any reduction in the mains voltage operate on a special electronic circuit which, in the event of the power supply falling below 165V~, stops the burner switching on without releasing the fuel and locks out the apparatus.

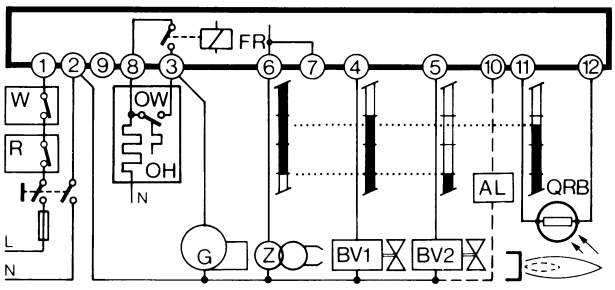

Wiring diagram of the program

To ensure correct wiring it is essential to observe local standards and follow the instructions of the burner manufacturer with regard to assembly and start-up.

Program's legend:

Controller output signals
Required input signals

A’Burner start up with light oil pre-heater OH

A Burner start-up without light oil pre-heater

B Flame lit

C Normal operation

D Normal stop through R

tw Oil pre-heating time until operational all clear given through contact OW

tl Pre-purge time

t3 Pre-ignition time

t2 Safety time

t3n Post-ignition time

t4 Interval between the flame lighting and energising of solenoid 2a at terminal 5

Internal layout

AL Optical alarm

BV. Fuel valve

EK Reset button

FR Flame relay

fr Flame relay contacts

FS Flame alight signal

G Burner motor

K Flame relay anchor to delay the tzl command in the event of a premature flame signal or endorse it where the signal is correct.

OH light oil pre-heater

OW Operational all-clear contact

QRB Photo-resistant cell (flame detector)

R Thermostat or pressure switch

TZ Thermo-electric programmer (bimetal system)

tz.. TZ contacts

V Flame signal amplifier

W Safety thermostat or pressure switch

Z Ignition transformer

The above are safety devices!

To tamper with them in any way may have unforeseeable consequences!

Do not open them!

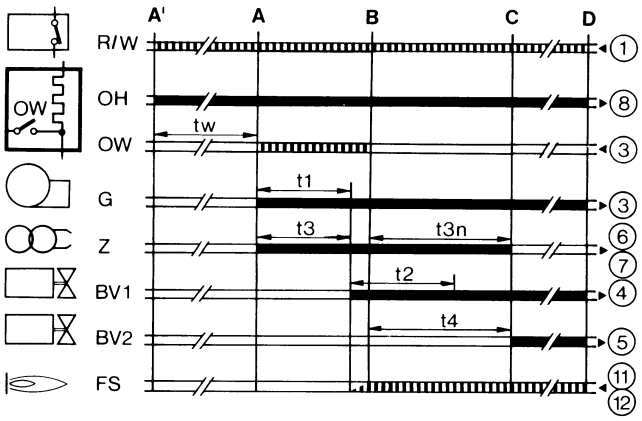

Technical characteristics

Voltage	220V -15%..240V+10% or 100V -15%...110V+10%
Frequency	50...60Hz +/- 6%
External fuse	max.10A slow action
Contact flow:	
- terminal 1	5A
- terminal 3	5A (incl.capacity absorbed by motor and pre-heater)
Terminal flow:	
terminals 4, 5 &10	1A
terminals 6&7	2A
terminal 8	5A
Absorbed cap	3VA
Protection	IP40
Premitted temp:	
operational	-20...+60°C

transport & storage	-50...+60°C
Emplacement	any
Mass (weight)	controller 180g, socket 50g, AGK accessories 12 g.

Commands in the event of operational interference

Stray light/premature ignition

During pre-purge and/or pre-ignition there should be no flamesignal. If there is a flame signal, eg from premature ignition due to a faulty solenoid, external light, short circuit in the photoresisto or wiring, malfunction in the flame signal amplifier, etc., at the end of pre-purge and safety time the controller locks out the burner and stops the fuel flow even during safety time.

Absence of flame

If there is no flame at the end of safety time the controller locks out immediately.

Absence of flame during operation

If there is no flame during operation the controller cuts off the supply of fuel and automatically initiates a fresh start-up programme: at the end of t4 the start-up programme ends.

Whenever there is a safety stop, terminals 3-8 and 11 are de-energised in less than 1 second; at the same time a remote lockout signal is transmitted through terminal 10. The controller can be reset after c. 50 seconds.

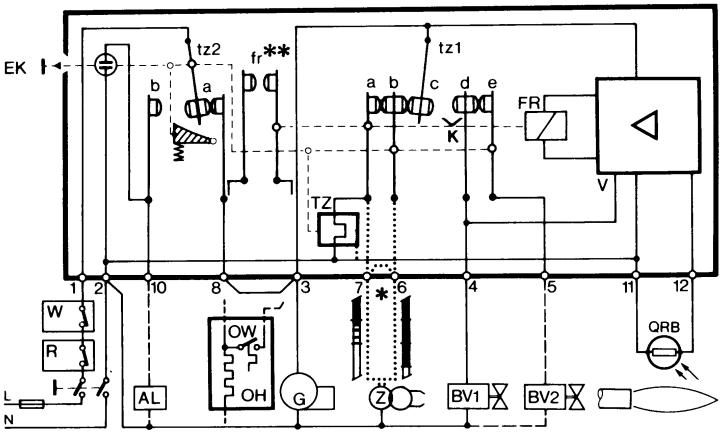

SIEMENS OIL BURNERS AUTOMATIC CONTROLLER SIEMENS LMO14 - LMO24 - LMO44

The LMO... burner controls are designed for the start-up and supervision of single- or 2-stage forced draught oil burners in intermittent operation. Yellow-burning flames are supervised with photoresistive detectors QRB..., blue-burning flames with blue-flame detectors QRC...

In terms of housing dimensions, electrical connections and flame detectors, the LMO... are identical to the LOA... oil burner controls.

Preconditions for startup

- Burner control is reset
- All contacts in the line are closed
- No undervoltage
- Flame detector is darkened, no extraneous light

Undervoltage

- Safety shut-down in the operating position takes place should the mains voltage drop below about AC 165 V
- Restart is initiated when the mains voltage exceeds about AC 175 V

Time supervision oil pre-heater

If the oil pre-heater's release contact does not close within 10 minutes, the burner control will initiate lock-out.

Controlled intermittent operation

After no more than 24 hours of continuous operation, the burner control will initiate an automatic safety shut-down followed by a restart.

Control sequence in the event of fault

If lock-out occurs, the outputs for the fuel valves and the ignition will immediately be deactivated (< 1 second).

Cause	Response
After a mains failure	Restart
After voltage has fallen below the undervoltage threshold	Restart
In the event of a premature, faulty flame signal during «t1»	Lock-out at the end of «t1»
In the event of a premature, faulty flame signal during «tw»	Prevention of start-up, lock-out after no more than 40 seconds
If the burner does not ignite during «TSA»	Lock-out at the end of TSA
In the event the flame is lost during operation	Max. 3 repetitions, followed by lock-out
Oil pre-heater's release contact does not close within 10 min.	Lock-out

Lock-out

In the event of lock-out, the LMO... remains locked (lock-out cannot be changed), and the red signal lamp will light up. This status is also maintained in the case of a mains failure.

Resetting the burner

Whenever lock-out occurs, the burner control can immediately be reset. To do this, keep control the lock-out reset button depressed for about 1 second (< 3 seconds).

Ignition program with LMO24.113A2

If the flame is lost during «TSA», the burner will be reignited, but not later than at the end of «TSAmax.». This means that several ignition attempts can be made during TSA (refer to «Program sequence»).

Limitation of repetitions

If the flame is lost during operation, a maximum of 3 repetitions can be made. If the flame is lost for the 4th time during operation, the burner will initiate lock-out. The repetition count is restarted each time controlled switching on by «R-W-SB» takes place.

Operation

Lock-out reset button «EK...» is the key operating element for resetting the burner control and for activating / deactivating the diagnostic functions.

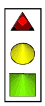

The multicolour «LED» is the key indicating element for both visual diagnosis and interface diagnosis.

s Red
l Yellow
o Green

Colour code table		
Status	Colour code	Colour
Oil pre-heater heats, waiting time «tw»	lllllllllll	Yellow
Ignition phase, ignition controlled	lmlmlmlmlml	Yellow-off
Operation, flame o.k.	oooooooooooo	Green
Operation, flame not o.k.	omomomomomo	Green-off
Undervoltage	lslslslslsl	Yellow-red
Fault, alarm	sssssssssss	Red
Output of fault code (refer to Fault code table)	smsmsmsmsm	Red-off
Extraneous light prior to burner start-up	osososososo	Green-red
Interface diagnosis	ssssssssssssss	Red flicker light

Key

m Off
l Yellow
o Green
s Red

Diagnosis of cause of fault

After lock-out, the red fault signal lamp remains steady on.

In that condition, the visual diagnosis of the cause of fault according to the error code table can be activated by pressing the lock-out reset button for more than 3 seconds.

Error code table	
Blink code	**Possible cause**
2 blinks **	No establishment of flame at the end of TSA ● Faulty or soiled fuel valves ● Faulty or soiled flame detector ● Poor adjustment of burner, no fuel ● Faulty ignition
3 blinks ***	Free
4 blinks ****	Extraneous light on burner startup
5 blinks *****	Free
6 blinks ******	Free
7 blinks *******	Too manny losses of fleme during operation (limitattion og the number of repetitions) ● Faulty or soiled fuel valves ● Faulty or soiled flame detector ● Poor adjustment of burner
8 blinks ********	Time supervision oil pre-heater
9 blinks *********	Free
10 blinks **********	Wiring error or internal error, output contacts

During the time the cause of fault is diagnosed, the control outputs are deactivated.

- Burner remains shut down
- Fault status signal «AL» at terminal 10 is activated

The diagnosis of the cause of fault is quit and the burner switched on again by resetting the burner control.

Press lock-out reset button for about 1 second (< 3 seconds).

Connection diagram and internal diagram

LMO14

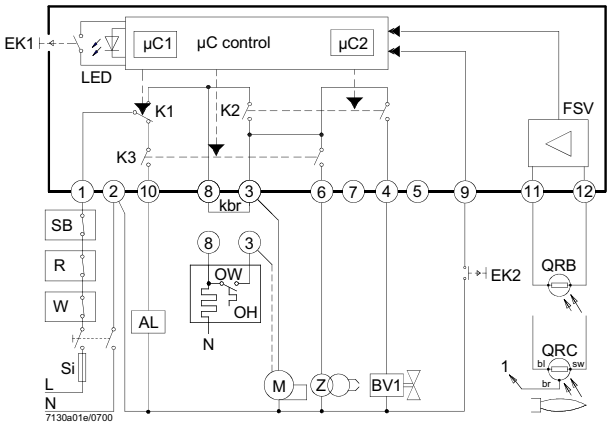

LMO24 - LMO44

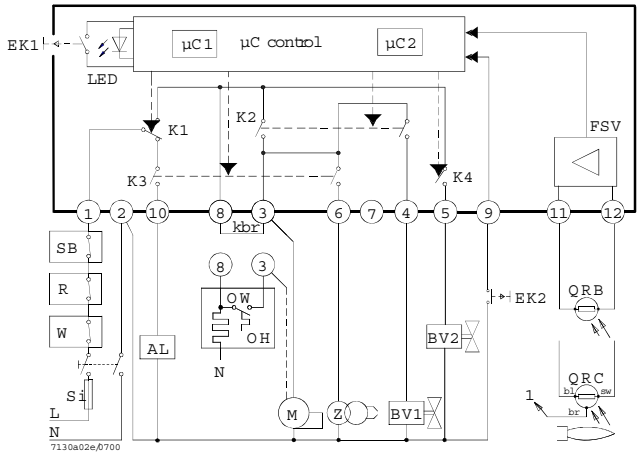

Control sequence

LMO14

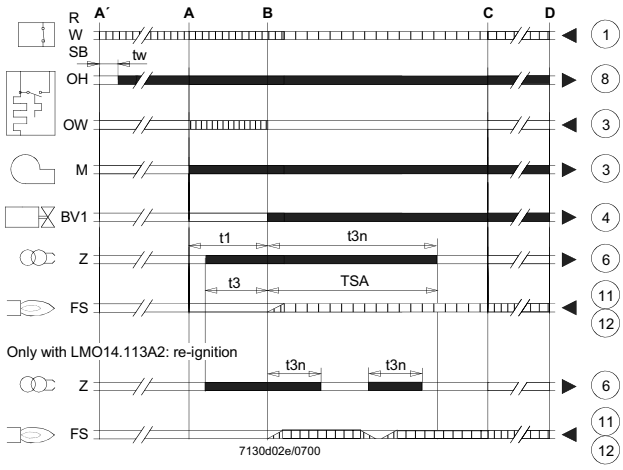

LMO24 - LMO44

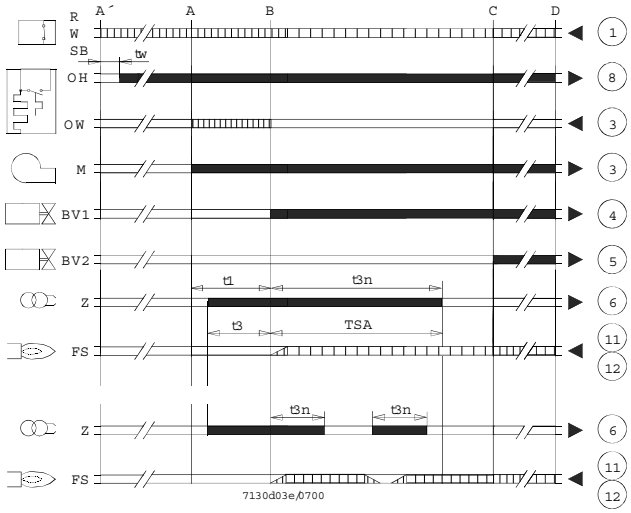

Key

AL	Alarm device
kbr...	Cable link (required only when no oil pre-heater is used)
BV...	Fuel valve
EK1	Lock-out reset button
EK2	Remote lock-out reset button
FS	Flame signal
FSV	Flame signal amplifier
K...	Contacts of control relay
LED	3-colour signal lamps
M	Burner motor
OW	Release contact of oil pre-heater
t1	Pre-purge time
t3	Pre-ignition time
t3n	Post-ignition time
A´	Beginning of start-up sequence with burners using an oil pre-heater
A	Beginning of start-up sequence with burners using no oil pre-heater
	Controller output signals
	Required input signals
OH	Oil pre-heater
QRB	Photoresistive detector
QRC	Blue-flame detector
bl = blue	
br = brown	
sw = black	
R	Control thermostat or pressurestat
SB	Safety limit thermostat
Si	External primary fuse
W	Limit thermostat or pressure switch
Z	Ignition transformer
t4	Interval from flame signal to release «BV2»
TSA	Ignition safety time
tw	Waiting time for oil pre-heating
B	Time of flame establishment
C	Operating position
D	Controlled shut-down by «R»
µC1	Microcontroller 1
µC2	Microcontroller 2

General unit data

Mains voltage	AC 230 V +10 % / -15 %
	AC 120 V +10 % / -15 %
Mains frequency	50...60 Hz ±6 %
External primary fuse (Si)	6.3A (slow)
Power consumption	12 VA
Mounting orientation	optional
Weight	approx. 200 g
Degree of protection	IP40 (to be ensured through mounting)
Perm. cable lengths	max. 3m at line capacitance of 100 pF/m
Detector cable laid separately	10 m
Remote reset laid separately	20m

	LMO14	LMO24	LMO44
Terminal 1	5 A	5 A	5 A
Terminals 3 and 8	3 A	5 A	5 A
Terminals 4, 5 and 10	1 A	1 A	1A
Terminals 6	1 A	1 A	2A

Flame supervision with QRB and QRC

	QRB	**QRC**
Min. detector current required (with flame)	45 µA	70 µA
Min detector current permitted (without flame)	5.5 µA	5.5 µA
Max. possible with flame (tipically)	100 µA	100 µA

Measurement circuit for detector current

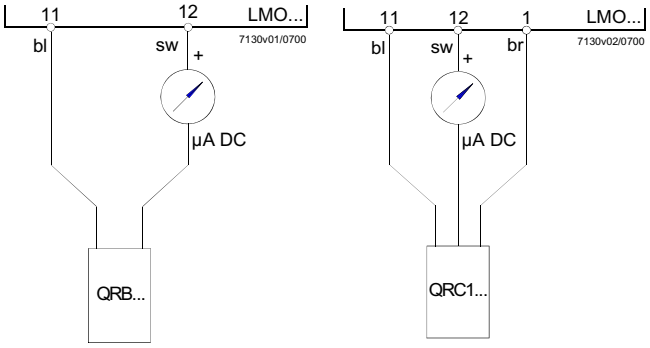

Key

µA DC	DC microamperometer with an internal resistance of 5 kW max.
bl	Blue
sw	Black
br	Brown

Ù

C.I.B. UNIGAS S.p.A.
Via L.Galvani, 9 - 35011 Campodarsego (PD) - ITALY
Tel. +39 049 9200944 - Fax +39 049 9200945/9201269
web site: www.cibunigas.it - e-mail: cibunigas@cibunigas.it

Note: specifications and data subject to change. Errors and omissions exceptd.

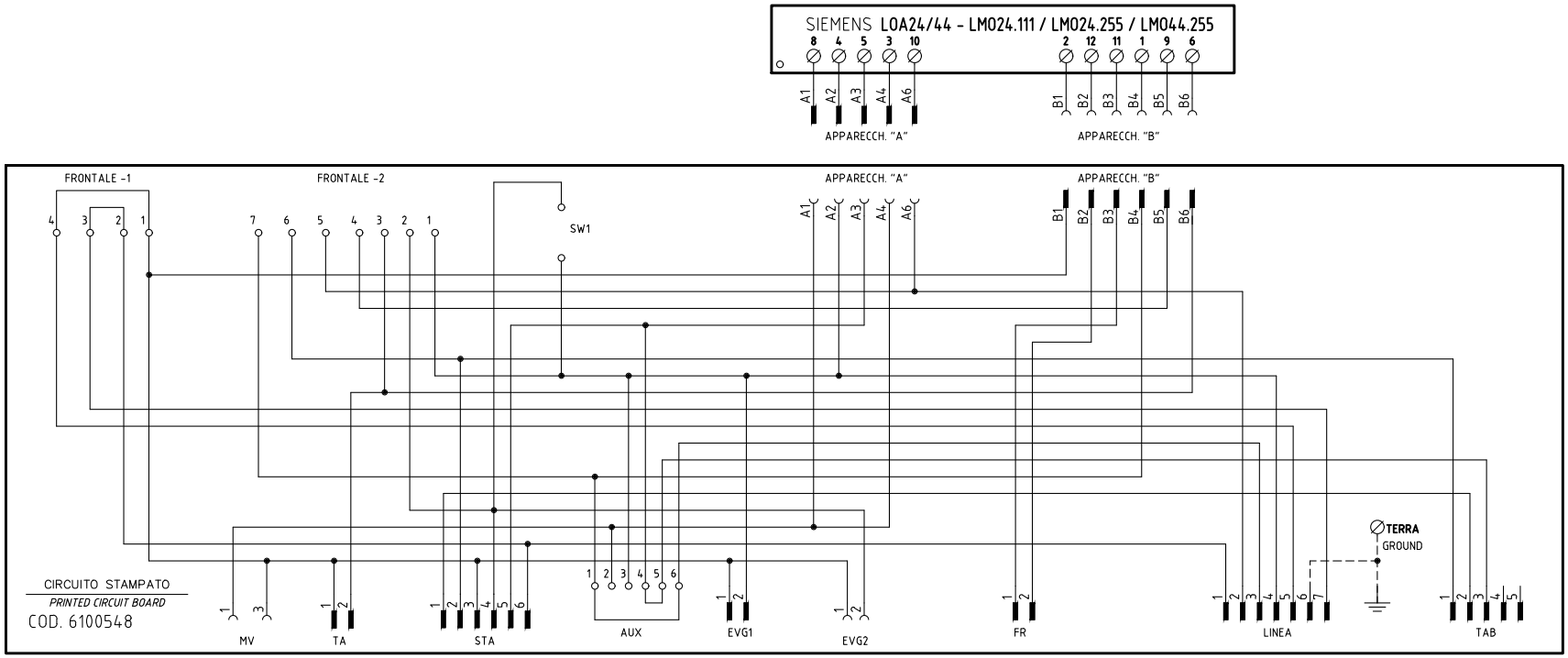

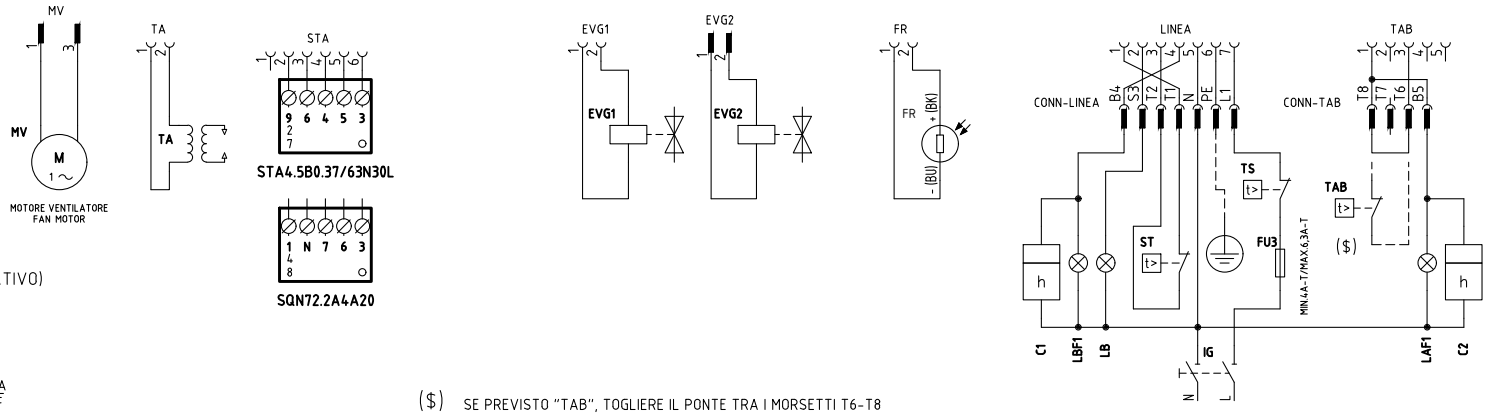

SERVOCOMANDO SERRANDA ARIA

AIR DAMPER SERVO CONTROL

STA4.5B0.37/63N30L

I	ALTA FIAMMA *HIGH FLAME*
II	SOSTA, ACCENSIONE E BASSA FIAMMA *STAND-BY, IGNITION AND LOW FLAME*
III	APERTURA EVG2 *OPEN EVG2*

SERVOCOMANDO SERRANDA ARIA (ALTERNATIVO)

AIR DAMPER ACTUATOR (ALTERNATIVE)

SQN72.2A4A20

I (ROSSO) *I (RED)*	ALTA FIAMMA *HIGH FLAME*
II (BLU) *II (BLUE)*	SOSTA, ACCENSIONE E BASSA FIAMMA *STAND-BY, IGNITION AND LOW FLAME*
IV (NERO) *IV (BLACK)*	APERTURA EVG2 *OPEN EVG2*

($) SE PREVISTO "TAB", TOGLIERE IL PONTE TRA I MORSETTI T6-T8
IF "TAB" USED REMOVE THE BRIDGE BETWEEN TERMINALS T6-T8

REV.	MODIFICA	DATA	FIRME
03	AGGIUNTO/ADDED LMO24.255	07/01/13	U. PINTON
02	AGGIUNTO/ADDED SQN72.2A4xx	22/05/09	U. PINTON
01	CORRETTO CONNETTORE EVG2	04/04/08	U. PINTON

UNIGAS

Impianto: *TIPI/TYPES LO60 – LO90*
MODELLI/MODELS x–.AB.x.xx.A

Descrizione: *VERSIONE CON CIRCUITO STAMPATO*
PRINTED CIRCUIT VERSION

Ordine

Commessa

Esecutore: U. PINTON

Data Controllato: 07/01/2013

Controllato: S. MARCHETTI

Data: 27/10/2004

Revisione: 03

Dis. N. 18 – 0072

PREC.: /

FOGLIO: 1

SEGUE: 2

TOTALE: 2

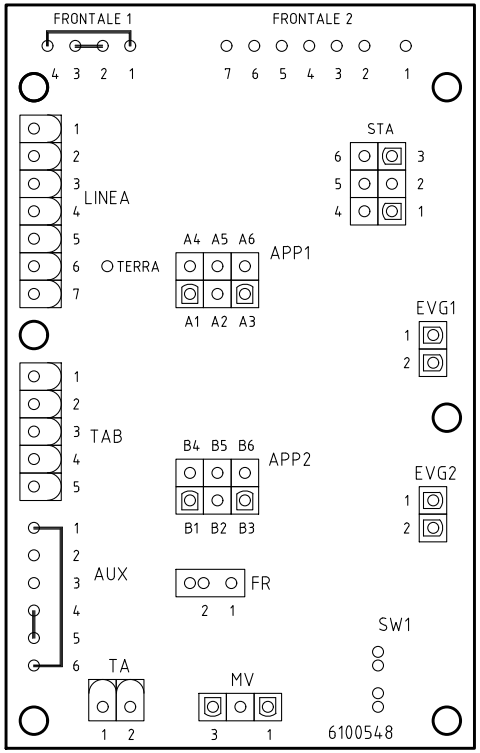

SIGLA/ITEM	Funzione	FUNCTION
C1	CONTAORE BASSA FIAMMA	LOW FLAME TIME METER
C2	CONTAORE ALTA FIAMMA	HIGH FLAME TIME METER
EVG1	ELETTROVALVOLA GASOLIO BASSA FIAMMA	LOW FLAME LIGHTOIL ELECTRO-VALVE
EVG2	ELETTROVALVOLA GASOLIO ALTA FIAMMA	HIGH FLAME LIGHT OIL ELECTRO-VALVE
FR	FOTORESISTENZA RIVELAZIONE FIAMMA	PHOTORESISTOR FLAME DETECTOR
FU3	FUSIBILE LINEA BRUCIATORE	BURNER LINE FUSE
IG	INTERRUTTORE GENERALE	MAIN DISCONNECTOR
LAF1	LAMPADA SEGNALAZIONE ALTA FIAMMA BRUCIATORE	BURNER IN HIGH FLAME INDICATOR LIGHT
LB	LAMPADA SEGNALAZIONE BLOCCO BRUCIATORE	INDICATOR LIGHT FOR BURNER LOCK-OUT
LBF1	LAMPADA SEGNALAZIONE BASSA FIAMMA BRUCIATORE	BURNER IN LOW FLAME INDICATOR LIGHT
LOA24/44 - LMO24.111/24.255/44.255	APPARECCHIATURA CONTROLLO FIAMMA	FLAME MONITOR DEVICE
MV	MOTORE VENTILATORE	FAN MOTOR
SQN72.2A4A20	SERVOCOMANDO SERRANDA ARIA (ALTERNATIVO)	AIR DAMPER SERVO CONTROL
ST	SERIE TERMOSTATI/PRESSOSTATI	SERIES OF THERMOSTATS OR PRESSURE SWITCHES
STA4.5B0.37/63N30L	SERVOCOMANDO SERRANDA ARIA	AIR DAMPER SERVO CONTROL
TA	TRASFORMATORE DI ACCENSIONE	IGNITION TRANSFORMER
TAB	TERMOSTATO/PRESSOSTATO ALTA-BASSA FIAMMA	HIGH-LOW THERMOSTAT/PRESSURE SWITCHES
TS	TERMOSTATO/PRESSOSTATO DI SICUREZZA	SAFETY THERMOSTAT OR PRESSURE SWITCH

Data 27/10/2004		PREC. 1	FOGLIO 2
Revisione 03			
Dis. N. 18 – 0072		SEGUE /	TOTALE 2