# LX60
# LX65
# LX72

## *Gas burners*

**MANUAL OF INSTALLATION - USE - MAINTENANCE**

**CIB UNIGAS**

**BURNERS - BRUCIATORI - BRULERS - BRENNER - QUEMADORES - ГОРЕЛКИ**

M03988CE Rev. 4.4 01/2024

# TABLE OF CONTENTS

**WARNINGS** ..... **3**

**PART I: INSTALLATION** ..... **6**

BURNERS SPECIFICATIONS ..... 6

*Specifications* ..... *6*
*Country and usefulness gas categories* ..... *7*
*Matching the burner to the boiler* ..... *7*
*Overall dimensions (mm)* ..... *9*
*Performance curves* ..... *12*

MOUNTINGS AND CONNECTIONS ..... 13
*Packing* ..... *13*
*Fitting the burner to the boiler* ..... *13*

*GAS TRAIN CONNECTIONS* ..... *14*
*Assembling the gas grain* ..... *15*
*Siemens VGD20.. and VGD40.. gas valves - with SKP2.. (pressure governor)* ..... *16*
*Pressure adjusting range* ..... *17*
*Gas Proving System VPS504* ..... *18*

ELECTRICAL CONNECTIONS ..... 19
*Note on elecrtical supply* ..... *19*
*Connection diagram* ..... *20*
*Rotation of fan motor* ..... *20*

ADJUSTMENTS ..... 21
*Combustion head pressure curves vs. the gas flow rate* ..... *21*
*Measuring the gas pressure in the combustion head* ..... *21*
*Gas pressure in combustion head vs. gas flow rate curves* ..... *22*
*Adjusting air and gas flow rates* ..... *23*
*Startup Output* ..... *23*
*Adjustments - brief description* ..... *23*
*Adjusting procedure* ..... *24*
*Progressive burners* ..... *27*
*Fully modulating burners* ..... *28*
*Calibration of air and gas pressure switches* ..... *28*
*Calibration of air pressure switch* ..... *28*
*Calibration of low gas pressure switch* ..... *28*
*Adjusting the high gas pressure switch (when provided)* ..... *28*

**PART II: OPERATION** ..... **29**

OPERATION ..... 30

**PART III: MAINTENANCE** ..... **32**

ROUTINE MAINTENANCE ..... 32
*Removing the filter in theMULTIBLOC DUNGS MB-DLE 415 - 420 B01 1” 1/2 - 2”* ..... *32*
*Inspection and replacement of the MULTIBLOC DUNGS MBC..SE filter (Threaded valves group)* ..... *33*
*Gas filter maintenance* ..... *33*
*Adjusting the electrodes* ..... *34*
*Replacing the electrodes* ..... *35*
*Checking the detection current* ..... *35*
*Seasonal stop* ..... *35*

TROUBLESHOOTING ..... 36

BURNER EXPLODED VIEW ..... 37

WIRING DIAGRAMS ..... 42

**APPENDIX**

## DANGERS, WARNINGS AND NOTES OF CAUTION

**THIS MANUAL IS SUPPLIED AS AN INTEGRAL AND ESSENTIAL PART OF THE PRODUCT AND MUST BE DELIVERED TO THE USER.**

**INFORMATION INCLUDED IN THIS SECTION ARE DEDICATED BOTH TO THE USER AND TO PERSONNEL FOLLOWING PRODUCT INSTALLATION AND MAINTENANCE.**

**THE USER WILL FIND FURTHER INFORMATION ABOUT OPERATING AND USE RESTRICTIONS, IN THE SECOND SECTION OF THIS MANUAL. WE HIGHLY RECOMMEND TO READ IT.**

**CAREFULLY KEEP THIS MANUAL FOR FUTURE REFERENCE.**

### 1) GENERAL INTRODUCTION

- The equipment must be installed in compliance with the regulations in force, following the manufacturer's instructions, by qualified personnel.
- Qualified personnel means those having technical knowledge in the field of components for civil or industrial heating systems, sanitary hot water generation and particularly service centres authorised by the manufacturer.
- Improper installation may cause injury to people and animals, or damage to property, for which the manufacturer cannot be held liable.
- Remove all packaging material and inspect the equipment for integrity.

In case of any doubt, do not use the unit - contact the supplier.

The packaging materials (wooden crate, nails, fastening devices, plastic bags, foamed polystyrene, etc), should not be left within the reach of children, as they may prove harmful.

- Before any cleaning or servicing operation, disconnect the unit from the mains by turning the master switch OFF, and/or through the cut-out devices that are provided.
- Make sure that inlet or exhaust grilles are unobstructed.
- In case of breakdown and/or defective unit operation, disconnect the unit. Make no attempt to repair the unit or take any direct action.

Contact qualified personnel only.

Units shall be repaired exclusively by a servicing centre, duly authorised by the manufacturer, with original spare parts and accessories.

Failure to comply with the above instructions is likely to impair the unit's safety.

To ensure equipment efficiency and proper operation, it is essential that maintenance operations are performed by qualified personnel at regular intervals, following the manufacturer's instructions.

- When a decision is made to discontinue the use of the equipment, those parts likely to constitute sources of danger shall be made harmless.
- In case the equipment is to be sold or transferred to another user, or in case the original user should move and leave the unit behind, make sure that these instructions accompany the equipment at all times so that they can be consulted by the new owner and/or the installer.
- This unit shall be employed exclusively for the use for which it is meant. Any other use shall be considered as improper and, therefore, dangerous.

The manufacturer shall not be held liable, by agreement or otherwise, for damages resulting from improper installation, use and failure to comply with the instructions supplied by the manufacturer.The occurrence of any of the following circustances may cause explosions, polluting unburnt gases (example: carbon monoxide CO), burns, serious harm to people, animals and things:

- Failure to comply with one of the WARNINGS in this chapter
- Incorrect handling, installation, adjustment or maintenance of the burner
- Incorrect use of the burner or incorrect use of its parts or optional supply

### 2) SPECIAL INSTRUCTIONS FOR BURNERS

- The burner should be installed in a suitable room, with ventilation openings complying with the requirements of the regulations in force, and sufficient for good combustion.
- Only burners designed according to the regulations in force should be used.
- This burner should be employed exclusively for the use for which it was designed.
- Before connecting the burner, make sure that the unit rating is the same as delivery mains (electricity, gas oil, or other fuel).
- Observe caution with hot burner components. These are, usually, near to the flame and the fuel pre-heating system, they become hot during the unit operation and will remain hot for some time after the burner has stopped.

When the decision is made to discontinue the use of the burner, the user shall have qualified personnel carry out the following operations:

a Remove the power supply by disconnecting the power cord from the mains.

b Disconnect the fuel supply by means of the hand-operated shut-off valve and remove the control handwheels from their spindles.

**Special warnings**

- Make sure that the burner has, on installation, been firmly secured to the appliance, so that the flame is generated inside the appliance fire-box.
- Before the burner is started and, thereafter, at least once a year, have qualified personnel perform the following operations:

a set the burner fuel flow rate depending on the heat input of the appliance;

b set the flow rate of the combustion-supporting air to obtain a combustion efficiency level at least equal to the lower level required by the regulations in force;

c check the unit operation for proper combustion, to avoid any harmful or polluting unburnt gases in excess of the limits permitted by the regulations in force;

d make sure that control and safety devices are operating properly;

e make sure that exhaust ducts intended to discharge the products of combustion are operating properly;

f on completion of setting and adjustment operations, make sure that all mechanical locking devices of controls have been duly tightened;

g make sure that a copy of the burner use and maintenance instructions is available in the boiler room.

- In case of a burner shut-down, reser the control box by means of the RESET pushbutton. If a second shut-down takes place, call the Technical Service, **without trying to RESET further**.
- The unit shall be operated and serviced by qualified personnel only, in compliance with the regulations in force.

### 3) GENERAL INSTRUCTIONS DEPENDING ON FUEL USED

#### 3a) ELECTRICAL CONNECTION

- For safety reasons the unit must be efficiently earthed and installed as required by current safety regulations.
- It is vital that all saftey requirements are met. In case of any doubt, ask for an accurate inspection of electrics by qualified personnel, since the manufacturer cannot be held liable for damages that may be caused by failure to correctly earth the equipment.
- Qualified personnel must inspect the system to make sure that it is adequate to take the maximum power used by the equipment shown on the equipment rating plate. In particular, make sure that the system cable cross section is adequate for the power absorbed by the unit.
- No adaptors, multiple outlet sockets and/or extension cables are permitted to connect the unit to the electric mains.
- An omnipolar switch shall be provided for connection to mains, as required by the current safety regulations.
- The use of any power-operated component implies observance of a few basic rules, for example:
  - do not touch the unit with wet or damp parts of the body and/or with bare feet;
  - do not pull electric cables;
  - do not leave the equipment exposed to weather (rain, sun, etc.) unless expressly required to do so;
  - do not allow children or inexperienced persons to use equipment;
- The unit input cable shall not be replaced by the user.
  In case of damage to the cable, switch off the unit and contact qualified personnel to replace.
  When the unit is out of use for some time the electric switch supplying all the power-driven components in the system (i.e. pumps, burner, etc.) should be switched off.

## 3b) FIRING WITH GAS, LIGHT OIL OR OTHER FUELS

### GENERAL

- The burner shall be installed by qualified personnel and in compliance with regulations and provisions in force; wrong installation can cause injuries to people and animals, or damage to property, for which the manufacturer cannot be held liable.
- Before installation, it is recommended that all the fuel supply system pipes be carefully cleaned inside, to remove foreign matter that might impair the burner operation.
- Before the burner is commissioned, qualified personnel should inspect the following:

a the fuel supply system, for proper sealing;
b the fuel flow rate, to make sure that it has been set based on the firing rate required of the burner;
c the burner firing system, to make sure that it is supplied for the designed fuel type;
d the fuel supply pressure, to make sure that it is included in the range shown on the rating plate;
e the fuel supply system, to make sure that the system dimensions are adequate to the burner firing rate, and that the system is equipped with all the safety and control devices required by the regulations in force.

- When the burner is to remain idle for some time, the fuel supply tap or taps should be closed.

### SPECIAL INSTRUCTIONS FOR USING GAS

Have qualified personnel inspect the installation to ensure that:

a the gas delivery line and train are in compliance with the regulations and provisions in force;
b all gas connections are tight;
c the boiler room ventilation openings are such that they ensure the air supply flow required by the current regulations, and in any case are sufficient for proper combustion.

- Do not use gas pipes to earth electrical equipment.
- Never leave the burner connected when not in use. Always shut the gas valve off.
- In case of prolonged absence of the user, the main gas delivery valve to the burner should be shut off.

**Precautions if you can smell gas**

a do not operate electric switches, the telephone, or any other item likely to generate sparks;
b immediately open doors and windows to create an air flow to purge the room;
c close the gas valves;
d contact qualified personnel.

- Do not obstruct the ventilation openings of the room where gas appliances are installed, to avoid dangerous conditions such as the development of toxic or explosive mixtures.

### DIRECTIVES AND STANDARDS

***Gas burners***

**European directives**

-Regulation 2016/426/UE (appliances burning gaseous fuels)
-2014/35/UE (Low Tension Directive)
-2014/30/UE (Electromagnetic compatibility Directive)
-2006/42/EC (Machinery Directive)

**Harmonized standards**

-UNI EN 676 (Automatic forced draught burners for gaseous fuels)
-EN 55014-1 (Electromagnetic compatibility- Requirements for house hold appliances, electric tools and similar apparatus)
-EN 60204-1:2006 (Safety of machinery – Electrical equipment of machines.)
-CEI EN 60335-1 (Specification for safety of household and similar electrical appliances);
-CEI EN 60335-2-102 (Household and similar electrical appliances. Safety. Particular requirements for gas, oil and solid-fuel burning appliances having electrical connections).
-UNI EN ISO 12100:2010 (Safety of machinery - General principles for design - Risk assessment and risk reduction);

***Light oil burners***

**European directives**

-2014/35/UE (Low Tension Directive)
-2014/30/UE (Electromagnetic compatibility Directive)
-2006/42/EC (Machinery Directive)

**Harmonized standards**

-UNI EN 267-2011(Automatic forced draught burners for liquid fuels)
-EN 55014-1 (Electromagnetic compatibility- Requirements for house hold appliances, electric tools and similar apparatus)
-EN 60204-1:2006 (Safety of machinery – Electrical equipment of machines.)
-CEI EN 60335-1 (Specification for safety of household and similar electrical appliances);
-CEI EN 60335-2-102 (Household and similar electrical appliances. Safety. Particular requirements for gas, oil and solid-fuel burning appliances having electrical connections).
-UNI EN ISO 12100:2010 (Safety of machinery - General principles for design - Risk assessment and risk reduction);

***Heavy oil burners***

**European Directives**

-2014/35/UE (Low Tension Directive)
-2014/30/UE (Electromagnetic compatibility Directive)
-2006/42/EC (Machinery Directive)

**Harmonized standards**

-UNI EN 267(Automatic forced draught burners for liquid fuels)
-EN 55014-1 (Electromagnetic compatibility- Requirements for house hold appliances, electric tools and similar apparatus)
-EN 60204-1:2006 (Safety of machinery – Electrical equipment of machines.)
-CEI EN 60335-1 (Specification for safety of household and similar electrical appliances);
-CEI EN 60335-2-102 (Household and similar electrical appliances. Safety. Particular requirements for gas, oil and solid-fuel burning appliances having electrical connections).
-UNI EN ISO 12100:2010 (Safety of machinery - General principles for design - Risk assessment and risk reduction);

*Gas - Light oil burners*

**European Directives**

-Regulation 2016/426/UE (appliances burning gaseous fuels)
-2014/35/UE (Low Tension Directive)
-2014/30/UE (Electromagnetic compatibility Directive)
-2006/42/EC (Machinery Directive)

**Harmonized standards**

-UNI EN 676 (Automatic forced draught burners for gaseous fuels)
-UNI EN 267(Automatic forced draught burners for liquid fuels)
-EN 55014-1 (Electromagnetic compatibility- Requirements for house hold appliances, electric tools and similar apparatus)
-EN 60204-1:2006 (Safety of machinery – Electrical equipment of machines.)
-CEI EN 60335-1 (Specification for safety of household and similar electrical appliances);
-CEI EN 60335-2-102 (Household and similar electrical appliances. Safety. Particular requirements for gas, oil and solid-fuel burning appliances having electrical connections).
-UNI EN ISO 12100:2010 (Safety of machinery - General principles for design - Risk assessment and risk reduction);

*Gas - Heavy oil burners*

**European directives:**

-Regulation 2016/426/UE (appliances burning gaseous fuels)
-2014/35/UE (Low Tension Directive)
-2014/30/UE (Electromagnetic compatibility Directive)
-2006/42/EC (Machinery Directive)

**Harmonized standards**

-UNI EN 676 (Automatic forced draught burners for gaseous fuels)
-EN 55014-1 (Electromagnetic compatibility- Requirements for house hold appliances, electric tools and similar apparatus)
-EN 60204-1:2006 (Safety of machinery – Electrical equipment of machines.)
-CEI EN 60335-1 (Specification for safety of household and similar electrical appliances);
-CEI EN 60335-2-102 (Household and similar electrical appliances. Safety. Particular requirements for gas, oil and solid-fuel burning appliances having electrical connections).
-UNI EN ISO 12100:2010 (Safety of machinery - General principles for design - Risk assessment and risk reduction);

*Industrial burners*

**European directives**

-Regulation 2016/426/UE (appliances burning gaseous fuels)
-2014/35/UE (Low Tension Directive)
-2014/30/UE (Electromagnetic compatibility Directive)
-2006/42/EC (Machinery Directive)

**Harmonized standards**

-EN 55014-1 (Electromagnetic compatibility- Requirements for house hold appliances, electric tools and similar apparatus)
-EN 746-2 (Industrial thermoprocessing equipment - Part 2: Safety requirements for combustion and fuel handling systems)
-UNI EN ISO 12100:2010 (Safety of machinery - General principles for design - Risk assessment and risk reduction);
-EN 60204-1:2006 (Safety of machinery – Electrical equipment of machines.)
-EN 60335-2 (Electrical equipment of non-electric appliances for household and similar purposes. Safety requirements)

## Burner data plate

For the following information, please refer to the data plate:

- burner type and burner model: must be reported in any communication with the supplier
- burner ID (serial number): must be reported in any communication with the supplier
- date of production (year and month)
- information about fuel type and network pressure

| | |
|---|---|
| Type | -- |
| Model | -- |
| Year | -- |
| S.Number | -- |
| Output | -- |
| Oil Flow | -- |
| Fuel | -- |
| Category | -- |
| Gas Pressure | -- |
| Viscosity | -- |
| El.Supply | -- |
| El.Consump. | -- |
| Fan Motor | -- |
| Protection | -- |
| Drwaing n° | -- |
| P.I.N. | -- |

**SYMBOLS USED**

***WARNING!*** Failure to observe the warning may result in irreparable damage to the unit or damage to the environment

***DANGER!*** Failure to observe the warning may result in serious injuries or death.

***WARNING!*** Failure to observe the warning may result in electric shock with lethal consequences

Figures, illustrations and images used in this manual may differ in appearance from the actual product.

## BURNER SAFETY

The burners - and the configurations described below - comply with the regulations in force regarding health, safety and the environment. For more in-depth information, refer to the declarations of conformity that are an integral part of this Manual.

***DANGER! Incorrect motor rotation can seriously damage property and injure people.***

### *Residual risks deriving from misuse and prohibitions*

The burner has been built in order to make its operation safe; there are, however, residual risks.

Do not touch any mechanical moving parts with your hands or any other part of your body. Injury hazard
Do not touch any parts containing fuel (i.e. tank and pipes). Scalding hazard
Do not use the burner in situations other than the ones provided for in the data plate.
Do not use fuels other than the ones stated.
Do not use the burner in potentially explosive environments.
Do not remove or by-pass any machine safety devices.
Do not remove any protection devices or open the burner or any other component while the burner is running.
Do not disconnect any part of the burner or its components while the burner is running.
Untrained staff must not modify any linkages.

After any maintenance, it is important to restore the protection devices before restarting the machine.
All safety devices must be kept in perfect working order.
Personnel authorized to maintain the machine must always be provided with suitable protections.

ATTENTION: while running, the parts of the burner near the generator (coupling flange) are subject to overheating. Where necessary, avoid any contact risks by wearing suitable PPE.

# PART I: INSTALLATION

## *Burner model identification*

Burners are identified by burner type and model. Burner model identification is described as follows.

| Type | **LX72** | Model | **M-.** | **AB.** | **S.** | **.*** | **A.** | **0.** | **50** |
|---|---|---|---|---|---|---|---|---|---|
| | (1) | | (2) | (3) | (4) | (5) | (6) | (7) | (8) |

| | | |
|---|---|---|
| (1) | BURNER TYPE | **LX60 - LX65 - LX72** |
| (2) | FUEL | M - Natural gas |
| (3) | OPERATION (Available versions) | PR - Progressive<br>MD - Fully modulating<br>AB - Double stage |
| (4) | BLAST TUBE | S - Standard L - Extended |
| (5) | DESTINATION COUNTRY | * - see data plate |
| (6) | BURNER VERSION | A - Standard |
| (7) | EQUIPMENT | 0 = 2 gas valves<br>1 = 2 gas valves + gas proving system<br>8 = 2 gas valves + gas proving system + maximum gas pressure switch |
| (8) | GAS CONNECTION<br>see Specifications | 40 = Rp1 1/2 50 = Rp2 65 = DN65 80 = DN80 |

## *Specifications*

| **BURNERS** | | **LX60 M-...0.40** | **LX60 M-...0.50** | **LX60 M-...0.65** | **LX65 M-...0.50** | **LX65 M-...0.65** | **LX72 M-...0.50** | **LX72 M-...0.65** | **LX72 M-...0.80** |
|---|---|---|---|---|---|---|---|---|---|
| Output | min. - max kW | 165 - 720 | | | 245 - 760 | | | 241 - 1040 | |
| Fuel | | Natural gas | | | | | | | |
| Gas category | | (see next paragraph) | | | | | | | |
| Gas rate | min.- max $Stm^3/h$ | 17.5 - 76 | | | 26 - 80 | | | 25.5 - 110 | |
| Gas pressure | min. - max. mbar | (see Note 2) | | | | | | | |
| Protection | | IP40 | | | | | | | |
| Approx. weight | kg | 58 | 58 | 65 | 80 | 95 | 85 | 105 | 115 |
| Operation | | Two stages - Progressive - Fully modulating | | | | | | | |
| Valves size / Gas connection | | 1"1/2 / Rp1 1/2 | 2" / Rp2 | 2"1/2 / DN65 | 2" / Rp2 | 2"1/2 / DN65 | 2" / Rp2 | 2"1/2 / DN65 | 3" / DN80 |
| Operating temperature | °C | -10 ÷ +50 | | | | | | | |
| Storage Temperature | °C | -20 ÷ +60 | | | | | | | |
| Working service* | | Intermitent | | | | | | | |

**Electrical data 50 Hz**

Possible voltages, check the actual three-phase and single-phase supply voltage on the burner data plate.

| | | | | | | | | | |
|---|---|---|---|---|---|---|---|---|---|
| Power supply triphase | V | 230 / 400 3 a.c. | | | | | | | |
| | V | 115 2 a.c. / 220 2 a.c. / 230 1N a.c. | | | | | | | |
| | Hz | 50 | | | | | | | |
| Total power consumption | kW | 1.6 | 1.6 | 1.6 | 2 | 2 | 2 | 2.7 | 2.7 |
| Electric motor | kW | 1.1 | 1.1 | 1.1 | 1.5 | 1.5 | 1.5 | 2.2 | 2.2 |

**Electrical data 60 Hz**

Possible voltages, check the actual three-phase and single-phase supply voltage on the burner data plate.

| | | | | | | | | | |
|---|---|---|---|---|---|---|---|---|---|
| Power supply triphase | V | 220 / 230 / 265 / 277 / 380 / 440 / 460 / 480 / 525 3 a.c. | | | | | | | |
| | V | 110 / 120 / 230 2 a.c. | | | | | | | |
| | Hz | 60 | | | | | | | |
| Total power consumption | kW | 1.82 | 1.82 | 1.82 | 2.3 | 2.3 | 2.3 | 3.14 | 3.14 |
| Electric motor | kW | 1.32 | 1.32 | 1.32 | 1.8 | 1.8 | 1.8 | 2.64 | 2.64 |

| | |
|---|---|
| **Note1:** | **All gas flow rates are referred to Stm$^3$/h (1013 mbar absolute pressure, 15 °C temperature) and are valid for G20 gas (net calorific value $H_i$ = 34.02 MJ/Stm$^3$);** |
| **Note2:** | **Maximum gas pressure = 360mbar (with Dungs MBDLE)**<br>**Maximum gas pressure = 500mbar (with Siemens VGD)**<br>**Minimum gas pressure = see gas curves.** |

*** NOTE ON THE WORKING SERVICE: the control box automatically stops after 24h of continuous working. The control box immediately starts up, automatically.**

### *Country and usefulness gas categories*

| GAS CATEGORY | COUNTRY | | | | | | | | | | | | | | | | | | | | | | | | |
|---|---|---|---|---|---|---|---|---|---|---|---|---|---|---|---|---|---|---|---|---|---|---|---|---|---|
| $I_{2H}$ | AT | ES | GR | SE | FI | IE | HU | IS | NO | CZ | DK | GB | IT | PT | CY | EE | LV | SI | MT | SK | BG | LT | RO | TR | CH |
| $I_{2E}$ | LU | PL | - | - | - | - | - | - | - | - | - | - | - | - | - | - | - | - | - | - | - | - | - | - | - |
| $I_{2E(R)B}$ | BE | - | - | - | - | - | - | - | - | - | - | - | - | - | - | - | - | - | - | - | - | - | - | - | - |
| (*) $I_{2EK}$ | NL | - | - | - | - | - | - | - | - | - | - | - | - | - | - | - | - | - | - | - | - | - | - | - | - |
| $I_{2ELL}$ | DE | - | - | - | - | - | - | - | - | - | - | - | - | - | - | - | - | - | - | - | - | - | - | - | - |
| $I_{2Er}$ | FR | - | - | - | - | - | - | - | - | - | - | - | - | - | - | - | - | - | - | - | - | - | - | - | - |

**(*) Only for $I_{2EK}$** : the appliance was configured for the appliance category K (I2K) and is suitable for the use of G and G+ distribution gases according to the specifications as included in the NTA 8837:2012 Annex D with a Wobbe index of 43.46 – 45.3 MJ/m3 (dry, 0 °C, upper value) or 41.23 – 42.98 (dry, 15 °C, upper value). This appliance can moreover be converted and/or be calibrated for the appliance category E (I2E). This therefore implies that the appliance "is suitable for G+ gas and H gas or is demonstrably suitable for G+ gas and can demonstrably be made suitable for H gas" within the meaning of the "Dutch Decree of 10 May 2016 regarding amendment of the Dutch Gas Appliances Decree and the Dutch Commodities (Administrative Fines) Act in connection with the changing composition of gas in the Netherlands as well as technical amendment of some other decrees.

The values in the diagrams refer to **natural gas** with a calorific value of 8125 kcal/Stm$^3$ (15°C, 1013 mbar) and a density of 0.714 kg/Stm$^3$ .

The values in the diagrams refer to **GPL** with a calorific value of 22300 kcal/Stm$^3$ (15°C, 1013 mbar) and a density of 2.14 kg/Stm$^3$. When the calorific value and the density change, the pressure values should be adjusted accordingly.

$$\Delta p2 = \Delta p1 \quad * \left(\frac{Q2}{Q1}\right)^2 * \left(\frac{\rho 2}{\rho 1}\right)$$

Where:

| | |
|---|---|
| $p1$ | Natural gas pressure shown in diagram |
| $p2$ | Real gas pressure |
| $Q1$ | Natural gas flow rate shown in diagram |
| $Q2$ | Real gas flow rate |
| $\rho 1$ | Natural gas density shown in diagram |
| $\rho 2$ | Real gas density |

### *Matching the burner to the boiler*

The burners described in this manual have been tested with combustion chambers that comply with EN676 regulation and whose dimensions are described in the diagram . In case the burner must be coupled with boilers with a combustion chamber smaller in diameter or shorter than those described in the diagram, please contact the supplier, to verify that a correct matching is possible, with respect of the application involved. To correctly match the burner to the boiler verify the type of the blast tube . Verify the necessary input and the pressure in combustion chamber are included in the burner performance curve; otherwise the choice of the burner must be revised consulting the burner manufacturer.

- Cast-iron boilers, three pass flue boilers (with the first pass in the rear part): the blast tube must protrude about 150÷200 mm into the combustion chamber (Fig. 1).

The length of the blast tubes does not always allow this requirement to be met, and thus it may be necessary to use a suitably-sized spacer to move the burner backwards (Fig. 2).

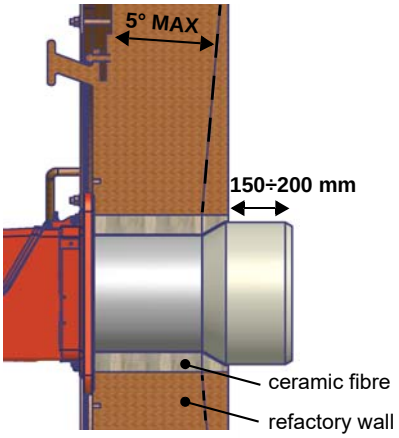

Fig. 1

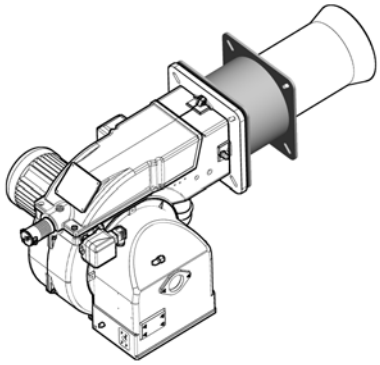
Fig. 2

***ATTENTION! Carefully seal the free space between blast tube and the refractory lining with ceramic fibre rope or other suitable means.***

The length of the blast tubes does not always allow this requirement to be met, and thus it may be necessary to use a suitably-sized spacer to move the burner backwards or to design a blast tube tha suites the utilisation (please, contact the manifacturer).

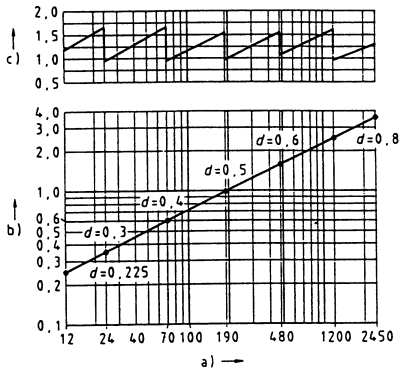

Fig. 3

**Key**

a) Heat output in kW

b) Lenght of the flame tube in meters

c) Flame tube firing intensity in MW/m$^3$

d) Combustion chamber diameter (m)

Fig. 3 - Firing intensity, diameter and lenght of the test flame tube as a function of the heat input in kW.

## *Overall dimensions (mm)*

### *LX60*

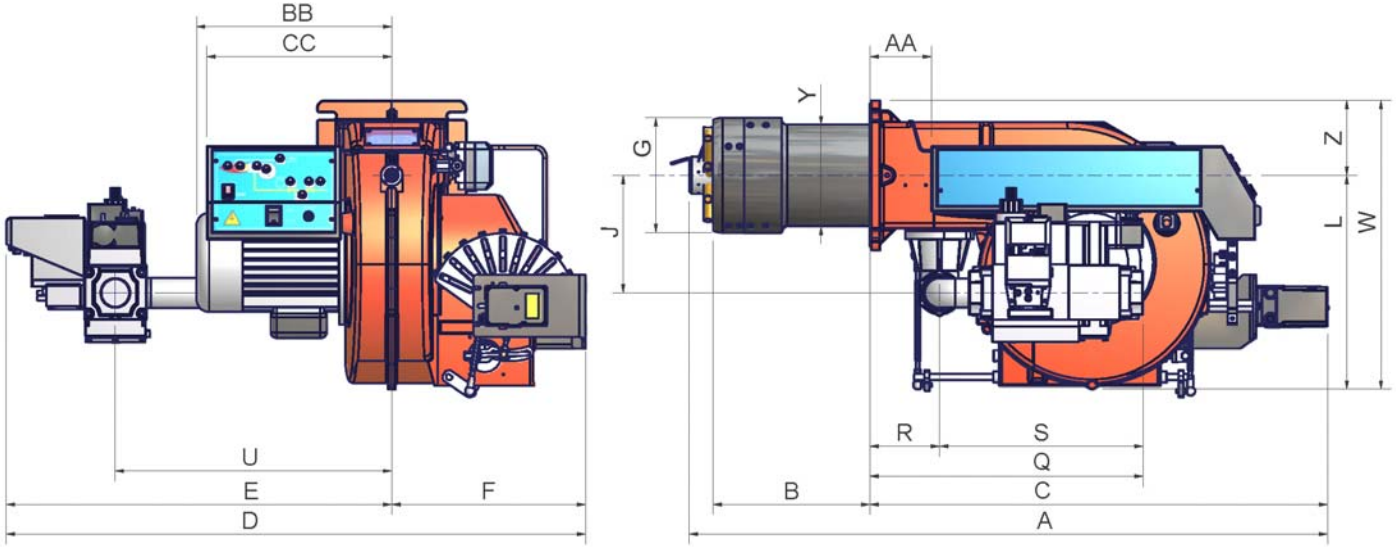


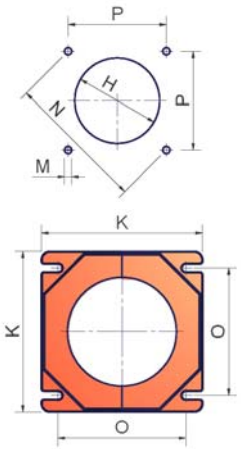


Boiler's drilling plate and burner's flange

| | DN | A(S*) | A(L*) | AA | B(S*) | B(L*) | BB | C | CC | D | E | F | G | H | J | K | L | M | N | O - min | O - max | P | Q | R | S | U | V | W | Y | Z |
|---|---|---|---|---|---|---|---|---|---|---|---|---|---|---|---|---|---|---|---|---|---|---|---|---|---|---|---|---|---|---|
| **LX60 PR - 0.40** | 40 | 1026 | 1206 | 99 | 252 | 432 | 314 | 736 | 298 | 812 | 500 | 312 | 185 | 204 | 210 | 240 | 344 | M10 | 269 | 190 | 190 | 190 | 439 | 112 | 327 | 444 | x | 464 | 162 | 120 |
| **LX60 MD - 0.40** | 40 | 1026 | 1206 | 99 | 252 | 432 | 314 | 736 | 298 | 812 | 500 | 312 | 185 | 204 | 210 | 240 | 344 | M10 | 269 | 190 | 190 | 190 | 439 | 112 | 327 | 444 | x | 464 | 162 | 120 |
| **LX60 AB - 0.40** | 40 | 956 | 1136 | 99 | 252 | 432 | 314 | 666 | 298 | 812 | 500 | 312 | 185 | 204 | 210 | 240 | 344 | M10 | 269 | 190 | 190 | 190 | 439 | 112 | 327 | 444 | x | 464 | 162 | 120 |
| **LX60 PR - 0.50** | 50 | 1026 | 1206 | 99 | 252 | 432 | 314 | 736 | 298 | 812 | 500 | 312 | 185 | 204 | 210 | 240 | 344 | M10 | 269 | 190 | 190 | 190 | 447 | 112 | 335 | 444 | x | 464 | 162 | 120 |
| **LX60 MD - 0.50** | 50 | 1026 | 1206 | 99 | 252 | 432 | 314 | 736 | 298 | 812 | 500 | 312 | 185 | 204 | 210 | 240 | 344 | M10 | 269 | 190 | 190 | 190 | 447 | 112 | 335 | 444 | x | 464 | 162 | 120 |
| **LX60 AB - 0.50** | 50 | 956 | 1136 | 99 | 252 | 432 | 314 | 666 | 298 | 812 | 500 | 312 | 185 | 204 | 210 | 240 | 344 | M10 | 269 | 190 | 190 | 190 | 447 | 112 | 335 | 444 | x | 464 | 162 | 120 |
| **LX60 PR - 0.65** | 65 | 1026 | 1206 | 99 | 252 | 432 | 314 | 736 | 298 | 997 | 685 | 312 | 185 | 204 | 250 | 240 | 420 | M10 | 269 | 190 | 190 | 190 | 515 | 112 | 403 | 540 | 313 | 540 | 162 | 120 |
| **LX60 MD - 0.65** | 65 | 1026 | 1206 | 99 | 252 | 432 | 314 | 736 | 298 | 997 | 685 | 312 | 185 | 204 | 250 | 240 | 420 | M10 | 269 | 190 | 190 | 190 | 515 | 112 | 403 | 540 | 313 | 540 | 162 | 120 |
| **LX60 AB - 0.65** | 65 | 956 | 1136 | 99 | 252 | 432 | 314 | 666 | 298 | 997 | 685 | 312 | 185 | 204 | 250 | 240 | 420 | M10 | 269 | 190 | 190 | 190 | 515 | 112 | 403 | 540 | 313 | 540 | 162 | 120 |

*S = measure referred to burner fitted with standard blast tube

*L = measure referred to burner fitted with extended blast tube
Note: the gas proving system is an option.

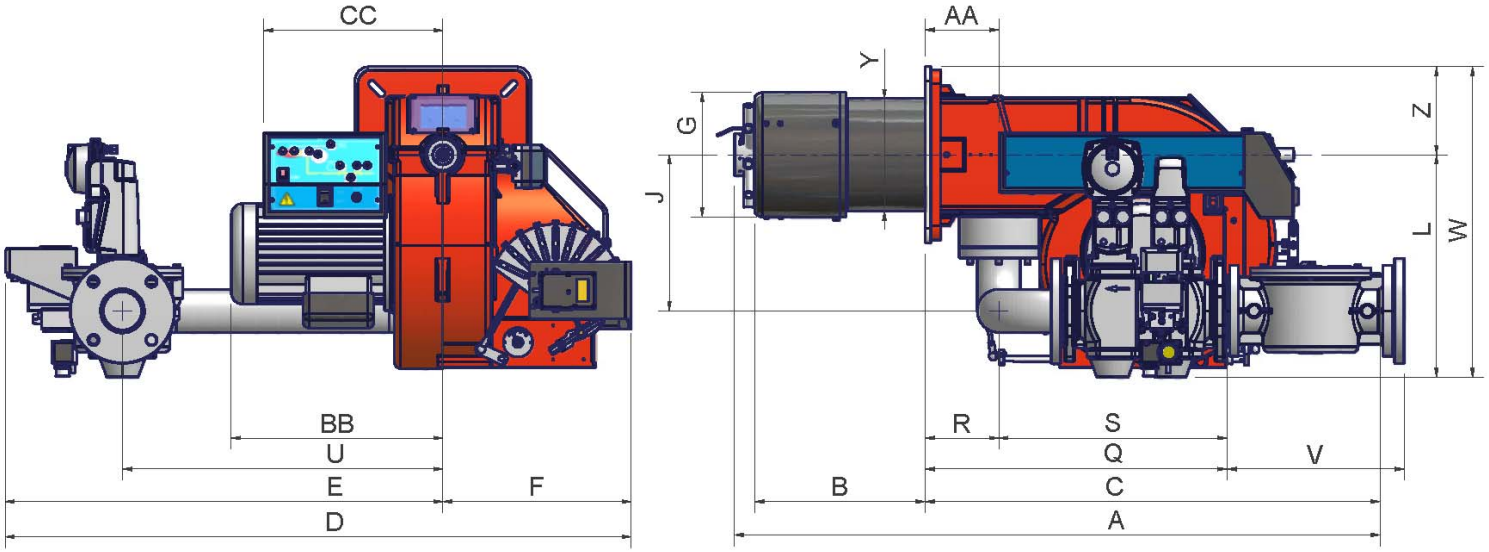


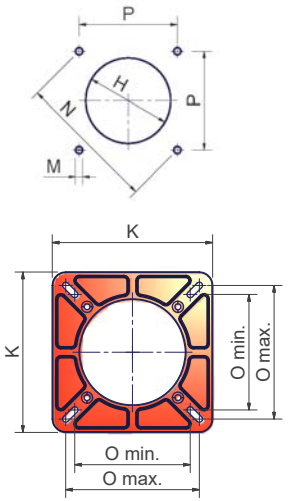


Boiler's drilling plate and burner's flange

| | DN | A(S*) | A(L*) | AA | B(S*) | B(L*) | BB | C | CC | D | E | F | G | H | J | K | L | M | N | Omin | Omax | P | Q | R | S | U | V | W | Y | Z |
|---|---|---|---|---|---|---|---|---|---|---|---|---|---|---|---|---|---|---|---|---|---|---|---|---|---|---|---|---|---|---|
| **LX65 PR - 0.50** | 50 | 1166 | 1256 | 130 | 326 | 416 | 373 | 803 | 316 | 900 | 568 | 332 | 185 | 228 | 208 | 300 | 376 | M10 | 330 | 216 | 250 | 233 | 465 | 130 | 335 | 519 | x | 531 | 162 | 155 |
| **LX65 PR - 1.50** | 50 | 1166 | 1256 | 130 | 326 | 416 | 373 | 803 | 316 | 1026 | 694 | 332 | 185 | 228 | 208 | 300 | 376 | M10 | 330 | 216 | 250 | 233 | 465 | 130 | 335 | 519 | x | 531 | 162 | 155 |
| **LX65 AB - 0.50** | 50 | 1096 | 1186 | 130 | 326 | 416 | 373 | 733 | 316 | 900 | 568 | 332 | 185 | 228 | 208 | 300 | 376 | M10 | 330 | 216 | 250 | 233 | 465 | 130 | 335 | 519 | x | 531 | 162 | 155 |
| **LX65 AB - 1.50** | 50 | 1096 | 1186 | 130 | 326 | 416 | 373 | 733 | 316 | 1026 | 694 | 332 | 185 | 228 | 208 | 300 | 376 | M10 | 330 | 216 | 250 | 233 | 465 | 130 | 335 | 519 | x | 531 | 162 | 155 |
| **LX65 MD - 0.50** | 50 | 1166 | 1256 | 130 | 326 | 416 | 373 | 803 | 316 | 900 | 568 | 332 | 185 | 228 | 208 | 300 | 376 | M10 | 330 | 216 | 250 | 233 | 465 | 130 | 335 | 519 | x | 531 | 162 | 155 |
| **LX65 MD - 1.50** | 50 | 1166 | 1256 | 130 | 326 | 416 | 373 | 803 | 316 | 1026 | 694 | 332 | 185 | 228 | 208 | 300 | 376 | M10 | 330 | 216 | 250 | 233 | 465 | 130 | 335 | 519 | x | 531 | 162 | 155 |
| **LX65 PR - 0.65** | 65 | 1166 | 1256 | 130 | 326 | 416 | 373 | 803 | 316 | 998 | 666 | 332 | 185 | 228 | 275 | 300 | 393 | M10 | 330 | 216 | 250 | 233 | 533 | 130 | 403 | 565 | 313 | 548 | 162 | 155 |
| **LX65 PR - 1.65** | 65 | 1166 | 1256 | 130 | 326 | 416 | 373 | 803 | 316 | 1104 | 772 | 332 | 185 | 228 | 275 | 300 | 393 | M10 | 330 | 216 | 250 | 233 | 533 | 130 | 403 | 565 | 313 | 548 | 162 | 155 |
| **LX65 AB - 0.65** | 65 | 1096 | 1186 | 130 | 326 | 416 | 373 | 733 | 316 | 998 | 666 | 332 | 185 | 228 | 275 | 300 | 393 | M10 | 330 | 216 | 250 | 233 | 533 | 130 | 403 | 565 | 313 | 548 | 162 | 155 |
| **LX65 AB - 1.65** | 65 | 1096 | 1186 | 130 | 326 | 416 | 373 | 733 | 316 | 1104 | 772 | 332 | 185 | 228 | 275 | 300 | 393 | M10 | 330 | 216 | 250 | 233 | 533 | 130 | 403 | 565 | 313 | 548 | 162 | 155 |
| **LX65 MD - 0.65** | 65 | 1166 | 1256 | 130 | 326 | 416 | 373 | 803 | 316 | 998 | 666 | 332 | 185 | 228 | 275 | 300 | 393 | M10 | 330 | 216 | 250 | 233 | 533 | 130 | 403 | 565 | 313 | 548 | 162 | 155 |
| **LX65 MD - 1.65** | 65 | 1166 | 1256 | 130 | 326 | 416 | 373 | 803 | 316 | 1104 | 772 | 332 | 185 | 228 | 275 | 300 | 393 | M10 | 330 | 216 | 250 | 233 | 533 | 130 | 403 | 565 | 313 | 548 | 162 | 155 |

*S = measure referred to burner fitted with standard blast tube

*L = measure referred to burner fitted with extended blast tube

Note: the gas proving system is an option.

| | DN | A(S*) | A(L*) | AA | B(S*) | B(L*) | BB | C | CC | D | E | F | G | H | J | K | L | M | N | Omin | Omax | P | Q | R | S | U | V | W | Y | Z |
|---|---|---|---|---|---|---|---|---|---|---|---|---|---|---|---|---|---|---|---|---|---|---|---|---|---|---|---|---|---|---|
| **LX72 PR - 0.50** | 50 | 1139 | 1224 | 130 | 300 | 385 | 373 | 803 | 316 | 900 | 568 | 332 | 219 | 249 | 208 | 300 | 376 | M10 | 330 | 216 | 250 | 233 | 465 | 130 | 335 | 519 | x | 531 | 198 | 155 |
| **LX72 PR - 1.50** | 50 | 1139 | 1224 | 130 | 300 | 385 | 373 | 803 | 316 | 1026 | 694 | 332 | 219 | 249 | 208 | 300 | 376 | M10 | 330 | 216 | 250 | 233 | 465 | 130 | 335 | 519 | x | 531 | 198 | 155 |
| **LX72 AB - 0.50** | 50 | 1069 | 1154 | 130 | 300 | 385 | 373 | 733 | 316 | 900 | 568 | 332 | 219 | 249 | 208 | 300 | 376 | M10 | 330 | 216 | 250 | 233 | 465 | 130 | 335 | 519 | x | 531 | 198 | 155 |
| **LX72 AB - 1.50** | 50 | 1069 | 1154 | 130 | 300 | 385 | 373 | 733 | 316 | 1026 | 694 | 332 | 219 | 249 | 208 | 300 | 376 | M10 | 330 | 216 | 250 | 233 | 465 | 130 | 335 | 519 | x | 531 | 198 | 155 |
| **LX72 MD - 0.50** | 50 | 1139 | 1224 | 130 | 300 | 385 | 373 | 803 | 316 | 900 | 568 | 332 | 219 | 249 | 208 | 300 | 376 | M10 | 330 | 216 | 250 | 233 | 465 | 130 | 335 | 519 | x | 531 | 198 | 155 |
| **LX72 MD - 1.50** | 50 | 1139 | 1224 | 130 | 300 | 385 | 373 | 803 | 316 | 1026 | 694 | 332 | 219 | 249 | 208 | 300 | 376 | M10 | 330 | 216 | 250 | 233 | 465 | 130 | 335 | 519 | x | 531 | 198 | 155 |
| **LX72 PR - 0.65** | 65 | 1139 | 1224 | 130 | 300 | 385 | 373 | 803 | 316 | 998 | 666 | 332 | 219 | 249 | 275 | 300 | 393 | M10 | 330 | 216 | 250 | 233 | 533 | 130 | 403 | 565 | 313 | 548 | 198 | 155 |
| **LX72 PR - 1.65** | 65 | 1139 | 1224 | 130 | 300 | 385 | 373 | 803 | 316 | 1104 | 772 | 332 | 219 | 249 | 275 | 300 | 393 | M10 | 330 | 216 | 250 | 233 | 533 | 130 | 403 | 565 | 313 | 548 | 198 | 155 |
| **LX72 AB - 0.65** | 65 | 1069 | 1154 | 130 | 300 | 385 | 373 | 733 | 316 | 998 | 666 | 332 | 219 | 249 | 275 | 300 | 393 | M10 | 330 | 216 | 250 | 233 | 533 | 130 | 403 | 565 | 313 | 548 | 198 | 155 |
| **LX72 AB - 1.65** | 65 | 1069 | 1154 | 130 | 300 | 385 | 373 | 733 | 316 | 1104 | 772 | 332 | 219 | 249 | 275 | 300 | 393 | M10 | 330 | 216 | 250 | 233 | 533 | 130 | 403 | 565 | 313 | 548 | 198 | 155 |
| **LX72 MD - 0.65** | 65 | 1139 | 1224 | 130 | 300 | 385 | 373 | 803 | 316 | 998 | 666 | 332 | 219 | 249 | 275 | 300 | 393 | M10 | 330 | 216 | 250 | 233 | 533 | 130 | 403 | 565 | 313 | 548 | 198 | 155 |
| **LX72 MD - 1.65** | 65 | 1139 | 1224 | 130 | 300 | 385 | 373 | 803 | 316 | 1104 | 772 | 332 | 219 | 249 | 275 | 300 | 393 | M10 | 330 | 216 | 250 | 233 | 533 | 130 | 403 | 565 | 313 | 548 | 198 | 155 |
| **LX72 PR - 0.80** | 80 | 1139 | 1224 | 130 | 300 | 385 | 373 | 803 | 316 | 998 | 666 | 332 | 219 | 249 | 275 | 300 | 407 | M10 | 330 | 216 | 250 | 233 | 574 | 130 | 444 | 565 | 344 | 562 | 198 | 155 |
| **LX72 PR - 1.80** | 80 | 1139 | 1224 | 130 | 300 | 385 | 373 | 803 | 316 | 1106 | 774 | 332 | 219 | 249 | 275 | 300 | 407 | M10 | 330 | 216 | 250 | 233 | 574 | 130 | 444 | 565 | 344 | 562 | 198 | 155 |
| **LX72 AB - 0.80** | 80 | 1069 | 1154 | 130 | 300 | 385 | 373 | 733 | 316 | 998 | 666 | 332 | 219 | 249 | 275 | 300 | 407 | M10 | 330 | 216 | 250 | 233 | 574 | 130 | 444 | 565 | 344 | 562 | 198 | 155 |
| **LX72 AB - 1.80** | 80 | 1069 | 1154 | 130 | 300 | 385 | 373 | 733 | 316 | 1106 | 774 | 332 | 219 | 249 | 275 | 300 | 407 | M10 | 330 | 216 | 250 | 233 | 574 | 130 | 444 | 565 | 344 | 562 | 198 | 155 |
| **LX72 MD - 0.80** | 80 | 1139 | 1224 | 130 | 300 | 385 | 373 | 803 | 316 | 998 | 666 | 332 | 219 | 249 | 275 | 300 | 407 | M10 | 330 | 216 | 250 | 233 | 574 | 130 | 444 | 565 | 344 | 562 | 198 | 155 |
| **LX72 MD - 1.80** | 80 | 1139 | 1224 | 130 | 300 | 385 | 373 | 803 | 316 | 1106 | 774 | 332 | 219 | 249 | 275 | 300 | 407 | M10 | 330 | 216 | 250 | 233 | 574 | 130 | 444 | 565 | 344 | 562 | 198 | 155 |

*S = measure referred to burner fitted with standard blast tube
*L = measure referred to burner fitted with extended blast tube
Note: the gas proving system is an option.

## *Performance curves*

**LX60 M-...40/50/65..**

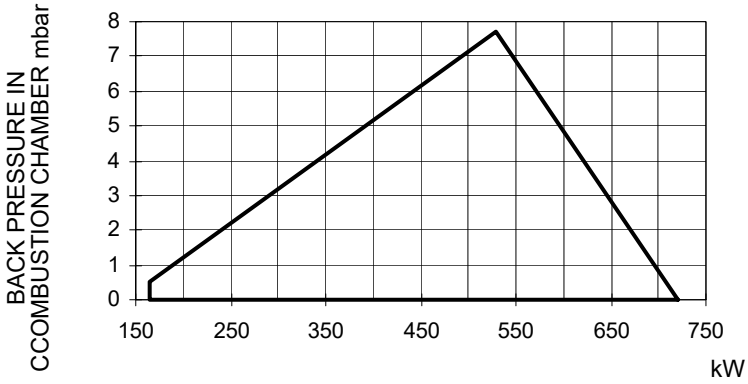


**LX65**

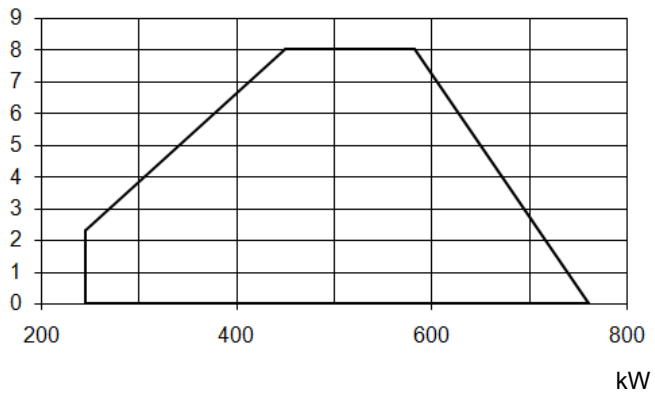


**LX72**

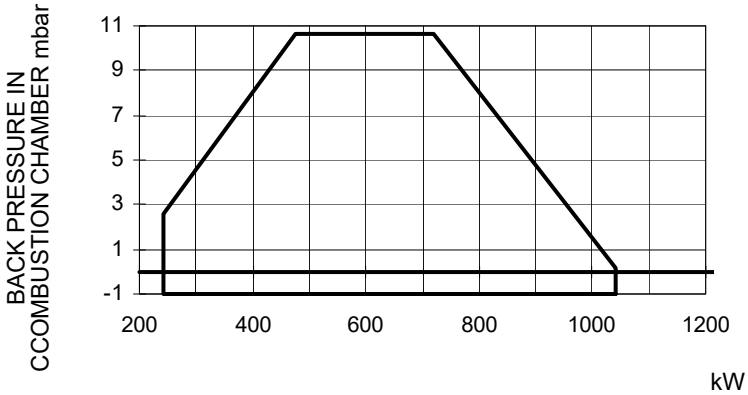


To get the input in kcal/h, multiply value in kW by 860.

Data are referred to standard conditions: atmospheric pressure at 1013mbar, ambient temperature at 15°C.

## *Pressure in the network/gas rate curves*

**LX60 M-...40..**

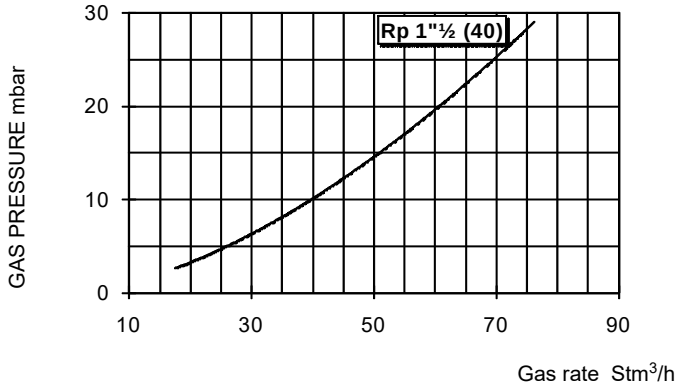


**LX60 M-...50/65..**

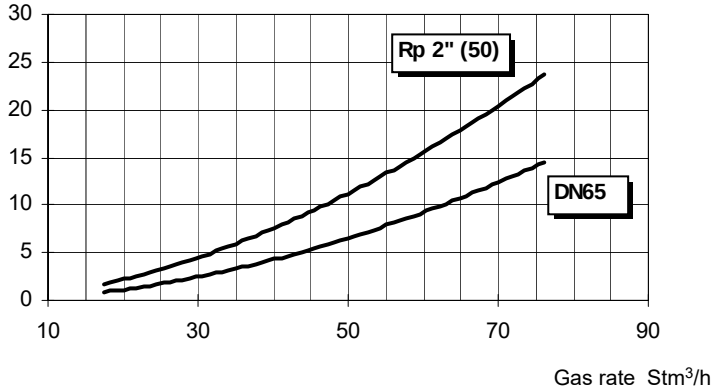


**LX65**

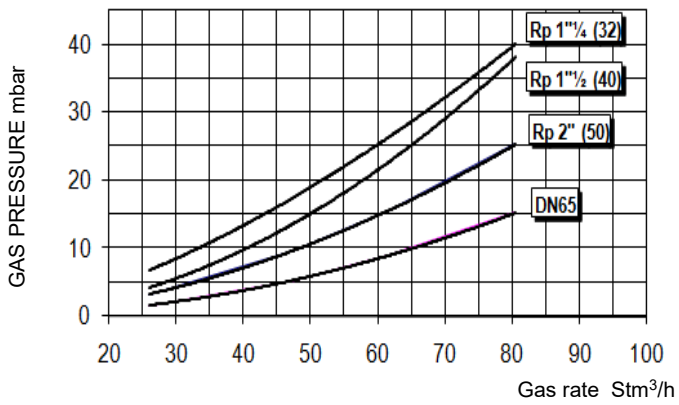


**LX72**

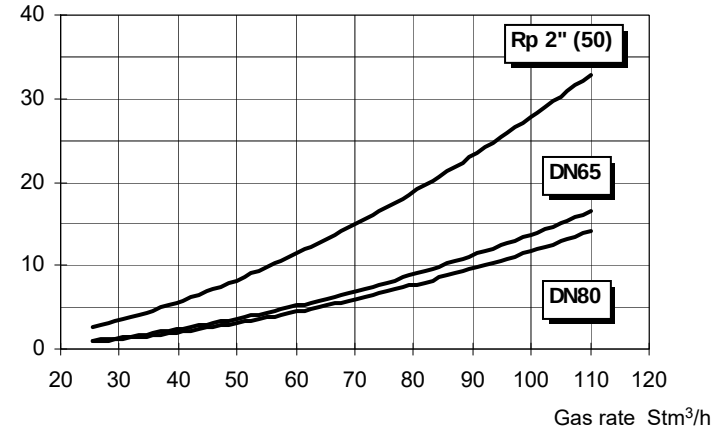

## MOUNTINGS AND CONNECTIONS

### *Packing*

Burners are despatched in cardboard packages whose dimensions are:

- LX60: 1200mm x 670mm x 540mm (L x P x H).
- LX65 - LX72: 1280mm x 850mm x 760mm (L x P x H).

Packing cases of this type are affected by humidity; the maximum number of cases to be stacked is shown outside the packing.The following are placed in each packing case.

1 burner with gas train;
1 gasket to be inserted between the burner and the boiler;
1 envelope containing this manual

To get rid of the burner's packing, follow the procedures laid down by current laws on disposal of materials.

### *Fitting the burner to the boiler*

To install the burner into the boiler, proceed as follows:

1 make a hole on the closing door of the combustion chamber as described on paragraph "Overall dimensions")
2 place the burner to the boiler: lift it up and handle it according to the procedure described on paragraph "Handling the burner";
3 place the 4 stud bolts (5) on boiler's door, according to the burner drilling template described on paragraph "Overall dimensions";
4 fasten the 4 stud bolts;
5 place the gasket on the burner flange;
6 install the burner into the boiler;
7 fix the burner to the stud bolts, by means of the fixing nuts, according to the next picture.
8 After fitting the burner to the boiler, ensure that the gap between the blast tube and the refractory lining is sealed with appropriate insulating material (ceramic fibre cord or refractory cement).

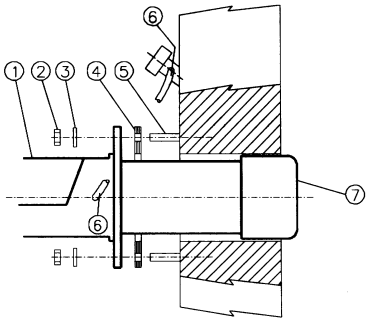


**Keys**

1 Burner
2 Fixing nut
3 Washer
4 Sealing gasket
5 Stud bolt
7 Blast tube

## GAS TRAIN CONNECTIONS

The next figures show the gas train components wich are included in the delivery and those wich must be fitted by the customer. The diagram complies with regulations in force

| | |
|---|---|
| ⚠ | **ATTENTION:** BEFORE EXECUTING THE CONNECTIONS TO THE GAS PIPE NETWORK, BE SURE THAT THE MANUAL CUTOFF VALVES ARE CLOSED. READ CAREFULLY THE “WARNINGS” CHAPTER AT THE BEGINNING OF THIS MANUAL. |

Rp1 1/2: Gas train with valves group MB-DLE (2 valves + gas filter + pressure governor + pressure switch) + leakage control VPS504

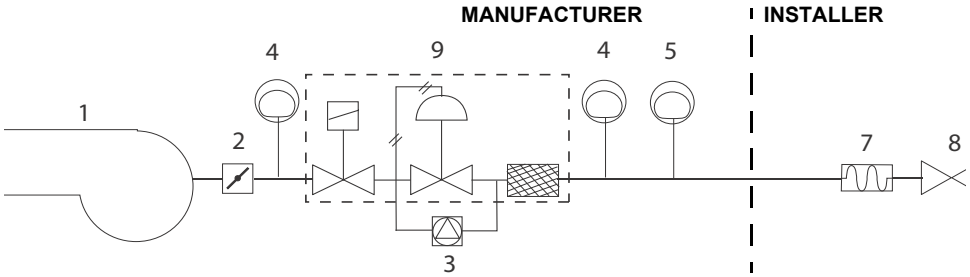


Rp2 - DN65 - DN80: Gas train with valves group VGD with built-in gas pressure governor + gas proving system VPS504

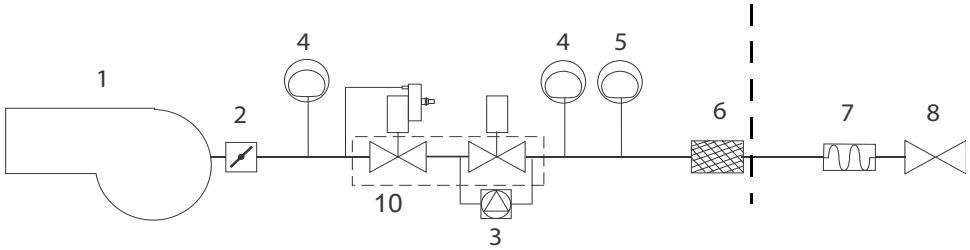


Rp2: Gas train with valves group MBC (2 valves + gas filter + pressure governor) + VPS504 gas proving system

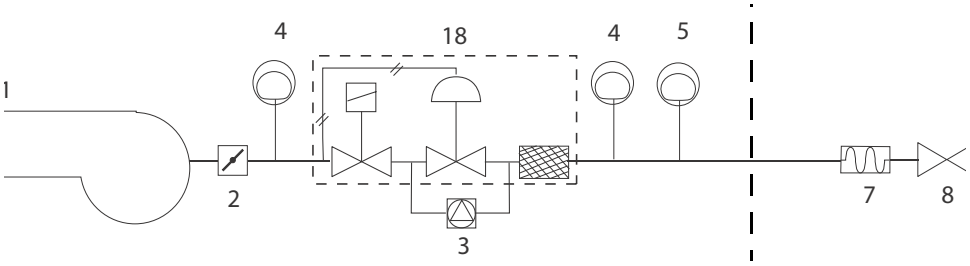


DN65 - DN80: Gas train with valves group MBC (2 valves + pressure governor) + VPS504 gas proving system

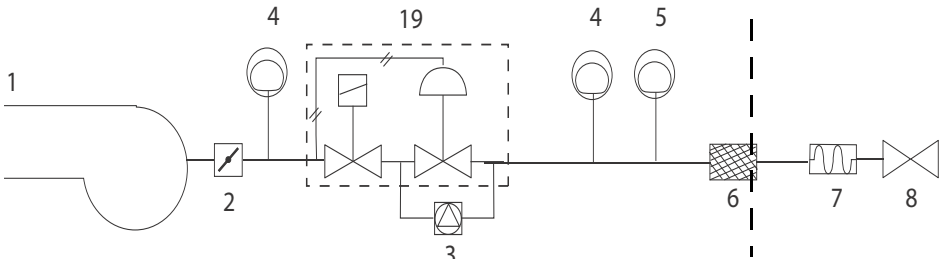


**Key**

1 Burner
2 Butterfly valve
3 Gas proving system (option)
4 Minimum gas pressure switch
5 Maximum gas pressure switch (option)
6 Gas filter
7 Bellow joint
8 Manual valve
9 MB-DLE Valves group
10 VGD Valves group
18 Valves group MBC (2”, provided with filter)
19 Valves group MBC (an external filter must be installed)

***Assembling the gas grain***

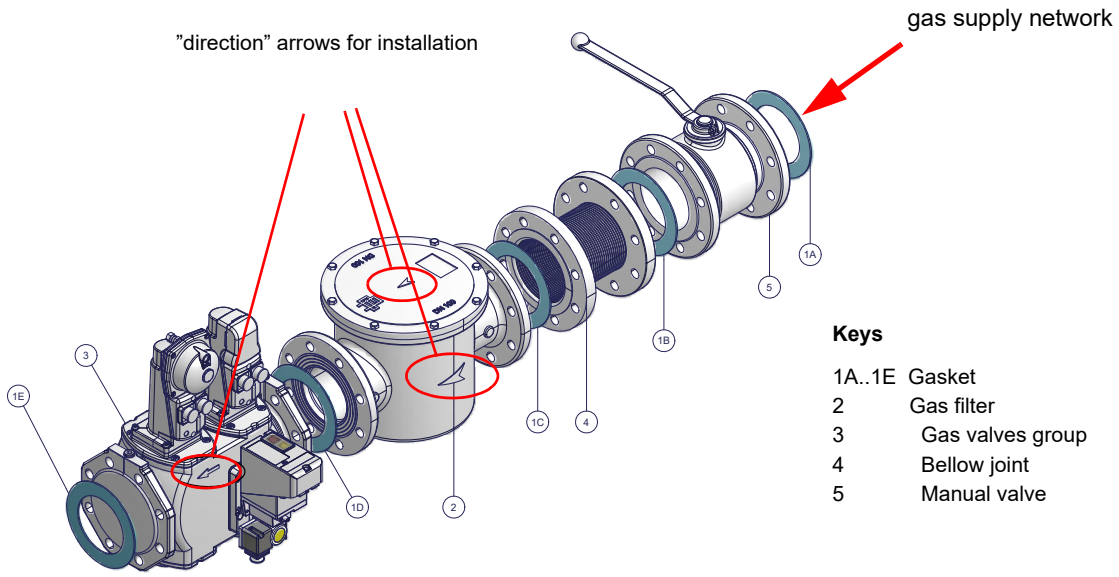


Fig. 2 - Example of gas train

To mount the gas train, proceed as follows:

1-a)in case of threaded joints: use proper seals according to the gas used;

1-b)in case of flanged joints: place a gasket (no. 1A..1E - Fig. 2) between the elements

**NOTE:** the bellow joint, the manual cock and the gaskets are not part of the standard supply.

| | |
|---|---|
| ⚠ | **ATTENTION:** once the gas train is mounted according to the diagram (Fig. 2), the gas proving test mus be performed, according to the procedure set by the laws in force. |

The procedures of installation fo the gas valves are showed in the next paragraphs, according to the gas train used:

- threaded gas trains with Multibloc Dungs MBC..SE 1200 or Siemens VGD20..
- flanged gas trains with Multibloc Dungs MBC..SE 1900-3100-5000 or Siemens VGD40..

**MULTIBLOC DUNGS MB-DLE 415..420**

**Mounting**

1. Loosen screws A and B **do not** unscrew (Fig. 3 - Fig. 4).
2. unscrew screws C and D (Fig. 3 - Fig. 4).
3. Remove MultiBloc between the threaded flanges (Fig. 4).
4. After mounting, perform leakage and functional tests.

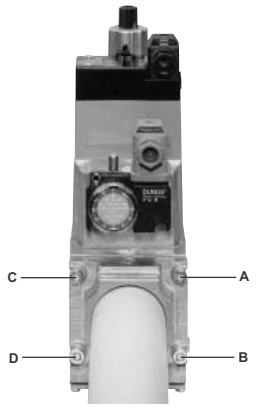


Fig. 3

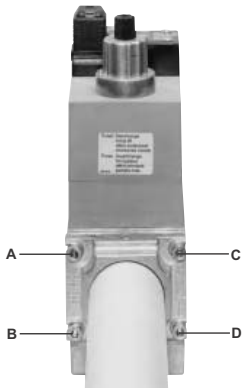


Fig. 4

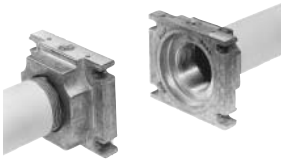

Fig. 5

MOUNTING POSITIONS

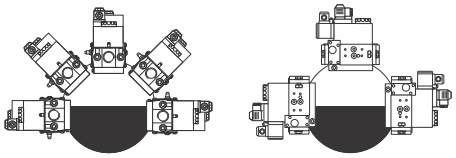

Fig. 6

### *MULTIBLOC DUNGS MBC300-700-1200SE (Threaded valves group)*

**Mounting**

1. Mount flange onto tube lines. Use appropriate sealing agent (see Fig. 7)
2. Insert MBC...SE. Note position of O rings (see Fig. 8).
3. Tighten screws A – H
4. After installation, perform leakage and functional test.
5. Disassembly in reverse order

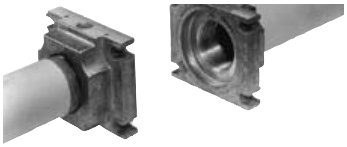

Fig. 7

**MOUNTING POSITIONS**

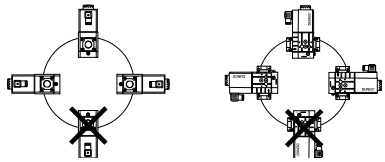

**OPTION**

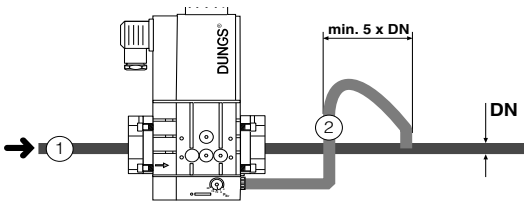


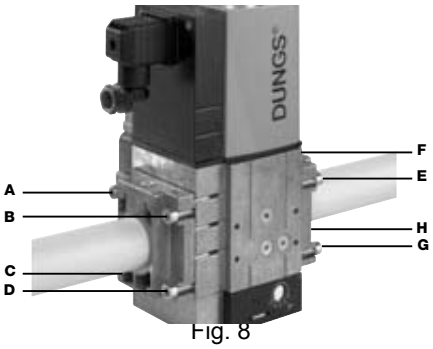


Fig. 8

### MULTIBLOCDUNGS MBC1900-3100-5000SE (Flanged valves group)

**Mounting**

1. Insert setscrews A
2. Insert seals
3. Insert setscrews B
4. Tighten setscrews A + B.

Ensure correct seating of the seal!

6. After installation, perform leakage and functional test.
7. Disassembly in reverse order.

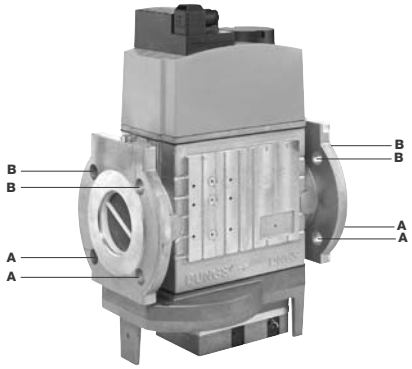


Fig. 9

**Mounting positions**

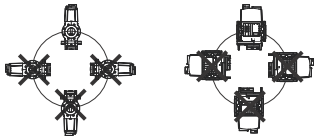

**OPTION**

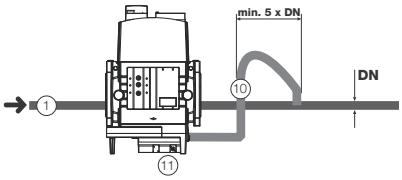


10 = pulse lines

### *Siemens VGD20.. and VGD40.. gas valves - with SKP2.. (pressure governor)*

***Mounting***

- When mounting the VGD.. double gas valve, two flanges are required (as for VGD20.. model, the flanges are threaded);
- to prevent cuttings from falling inside the valve, first fit the flanges to the piping and then clean the associated parts;
- install the valve;
- the direction of gas flow must be in accordance with the direction of the arrow on the valve body;
- ensure that the bolts on the flanges are properly tightened;
- ensure that the connections with all components are tight;
- make certain that the O-rings and gaskets between the flanges and the double gas valve are fitted.
- Connect the reference gas pipe (**TP** in figure; 8mm-external size pipe supplied loose), to the gas pressure nipples placed on the gas pipe, downstream the gas valves: gas pressure must be measured at a distance that must be at least 5 times the pipe size.

Leave the blowhole free (**SA** in figure). Should the spring fitted not permit satisfactory regulation, ask one of our service centres for a suitable replacement.

⚠ **Caution:** the SKP2 diaphragm **D** must be vertical (see Fig. 12).

**WARNING: removing the four screws BS causes the device to be unserviceable!**

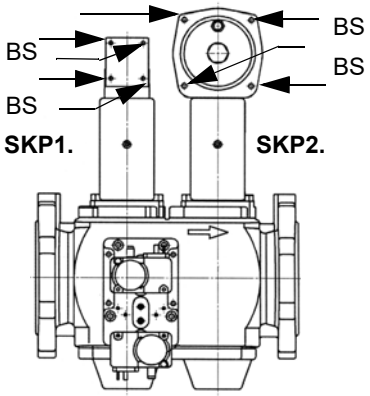


Fig. 10

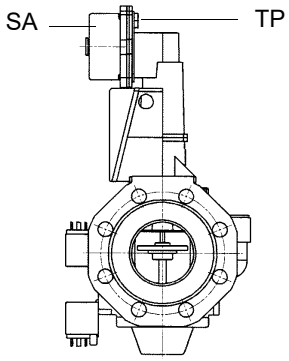


Fig. 11

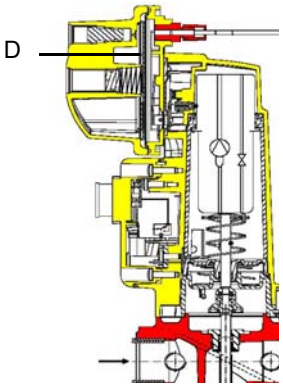


Fig. 12

SIEMENS VGD..MOUNTING POSITIONS

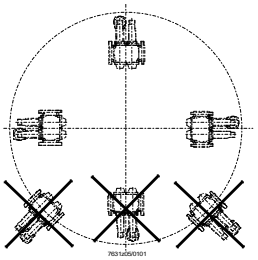

Fig. 13

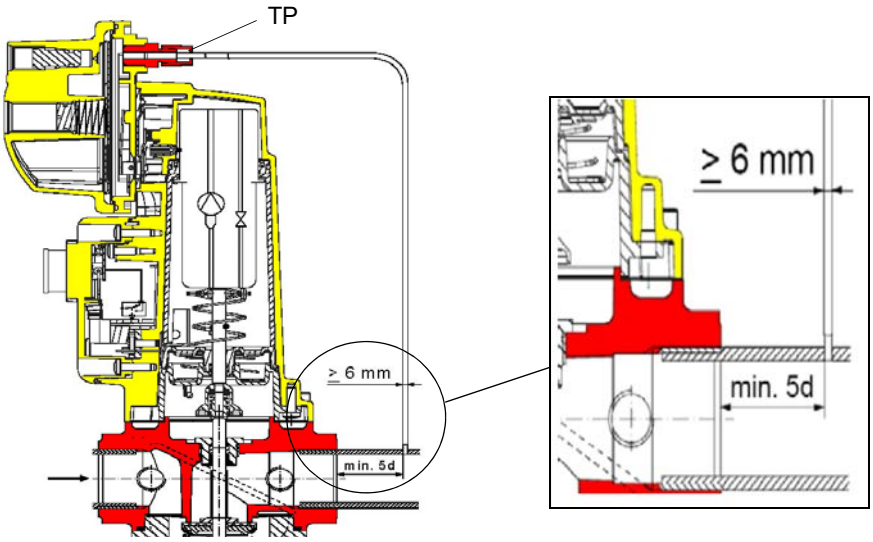


Fig. 14

### *Pressure adjusting range*

The pressure adjusting range, downstream the gas valves group, changes according to the spring provided with the valve group.

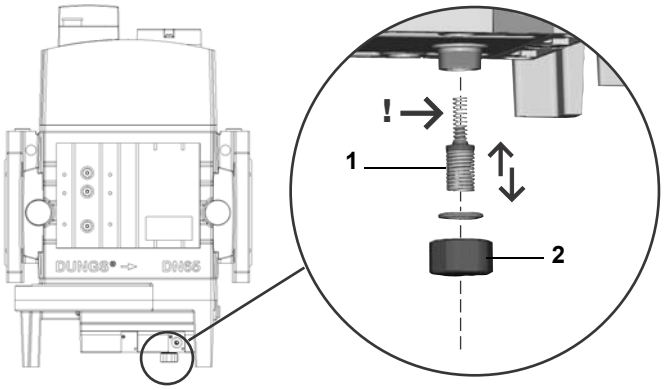


**DUNGS MBC..SE**

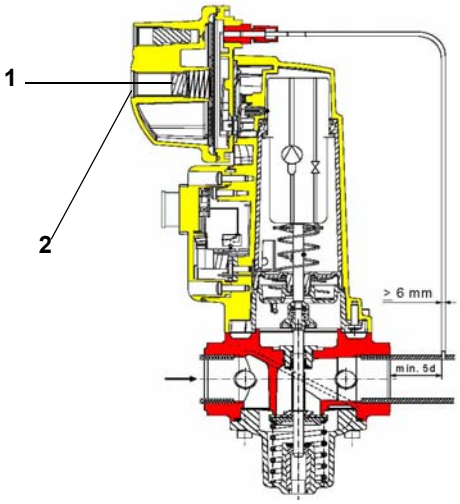


**Siemens SKP actuator**

**Keys**

1 spring

2 cap

**DUNGS MBC valves:**

| ***Performance range (mbar)*** | 4 - 20 | 20 - 40 | 40 - 80 | 80 - 150 |
|---|---|---|---|---|
| ***Spring colour*** | - | red | black | green |

**Siemens VGD valves with SKP actuator :**

| ***Performance range (mbar)*** | 0 - 22 | 15 - 120 | 100 - 250 |
|---|---|---|---|
| ***Spring colour*** | neutral | yellow | red |

### *Gas Proving System VPS504*

The VPS504 check the operation of the seal of the gas shut off valves. This check, carried out as soon as the boiler thermostat gives a start signal to the burner, creates, by means of the diaphragm pump inside it, a pressure in the test space of 20 mbar higher than the supply pressure.

To install the DUNGS VPS504 gas proving system on the MD-DLE valves group, proceed as follows:

1 turn off gas supply.;
2 Switch off power supply.
3 remove the Multibloc screw plugs (Fig. 15-A);
4 iInsert sealing rings (10,5 x 2,25) into VPS 504 (Fig. 15-B - Fig. 16)
5 Torque screws 3, 4, 5, 6 (M4 x16) Fig. 16-C

**Only use screws with metric thread on reassembly (modification, repair).**

6 On completion of work, perform a leak and functional test.

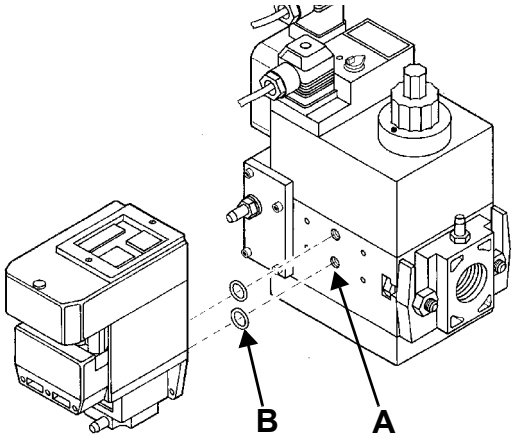

Fig. 15

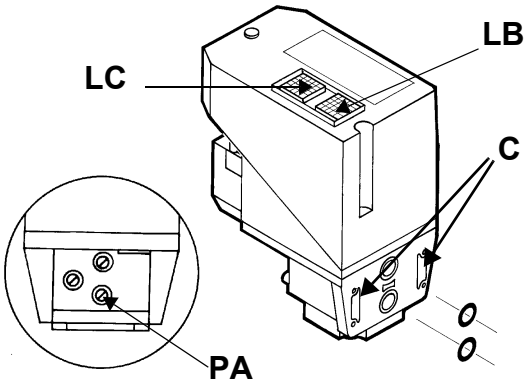

Fig. 16

When wishing to monitor the test, install a pressure gauge ranged to that of the pressure supply point **PA** (Fig. 16). If the test cycle is satisfactory, after a few seconds the consent light **LC** (yellow) comes on. In the opposite case the lockout light **LB** (red) comes on. To restart it is necessary to reset the appliance by pressing the illuminated pushbutton **LB**.

Once the train is installed, connect the gas valves group and pressure switches plugs.

| | |
|---|---|
| ⚠ | **ATTENTION:** once the gas train is mounted according to the diagram, the gas proving test mus be performed, according to the procedure set by the laws in force. |

## ELECTRICAL CONNECTIONS

| | |
|---|---|
| ⚠ | **WARNING: The burner is provided with a jumper between terminals 6 and 7; in the event of connecting the high/ low flame thermostat remove this jumper before connecting the thermostat.** |
| | **IMPORTANT: while connecting electric supply wires to burner's teminal block be sure that ground wire should be longer than phase and neutral ones.** |

| | |
|---|---|
| ⚠ | **WARNING: if the cable that connects the thermostats and the control box should be longer than 3 meters, insert a sectioning relay following the attached electrical wiring diagram..** |

| | |
|---|---|
| ⚠ | **Respect the basic safety rules. make sure of the connection to the earthing system. do not reverse the phase and neutral connections. fit a differential thermal magnet switch adequate for connection to the mains.** |
| | **ATTENTION: before executing the electrical connections, pay attention to turn the plant's switch to OFF and be sure that the burner's main switch is in 0 position (OFF) too. Read carefully the chapter "WARNINGS", and the "Electrical connections" section..** |

| | |
|---|---|
| ⚠ | **WARNING: if the cable that connects the thermostats and the control box should be longer than 3 meters, insert a sectioning relay following the attached electrical wiring diagram.** |

- Remove the cover of the burner electrical board.
- Perform the electrical connections to the supply terminal board as shown in Fig. 8, check the direction of the fan motor (see related paragraph) and refit the panel cover.

Wiring diagram keys on page 42.

### *Note on elecrtical supply*

If the power supply to the burner is 230V three-phase or 230V phase-phase (without a neutral), with the Siemens LME2... control box, between the terminal 2 on the board and the earth terminal, an RC Siemens RC466890660 filter must be inserted

**Key**

C - Capacitor (22nF/250V)
LME - Siemens control box
R - Resistor (1Mohm)
RC466890660 - RC Siemens filter

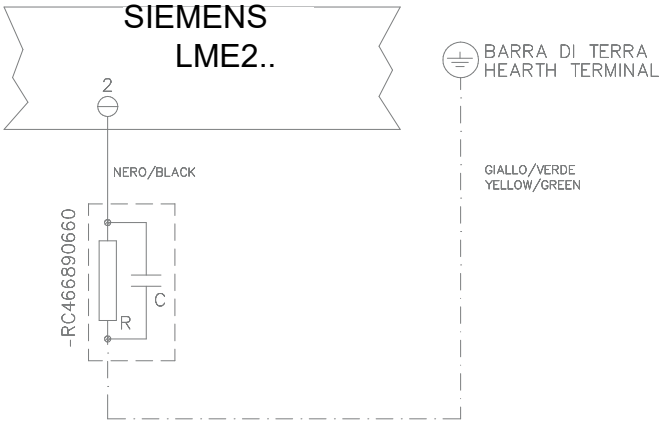


Fig. 17

## *Connection diagram*

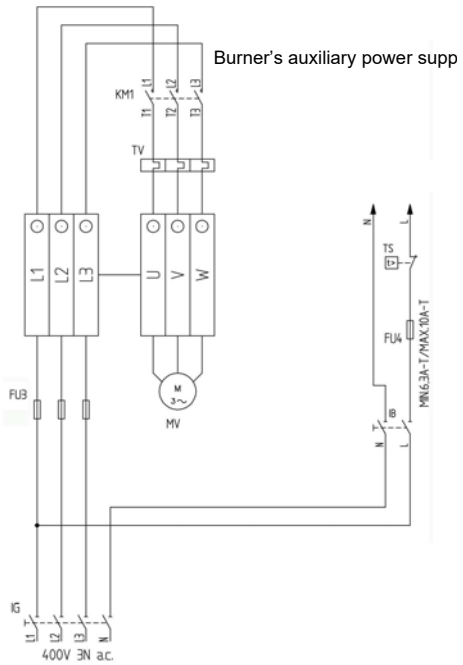


Fig. 18

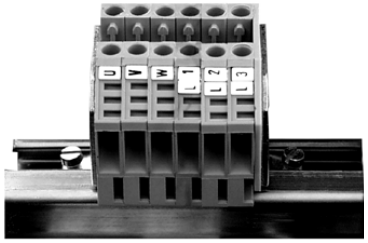

Fig. 20 - Power supply terminal block

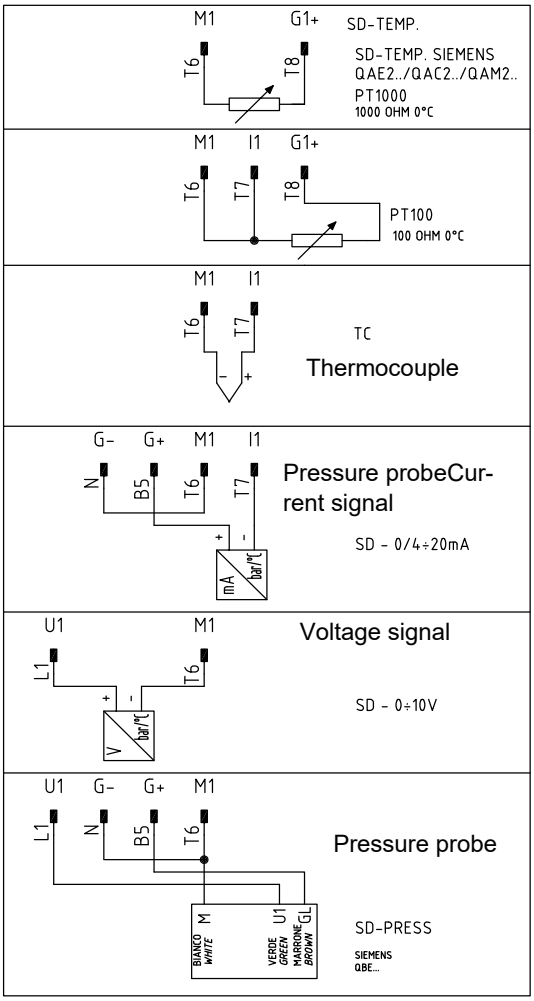


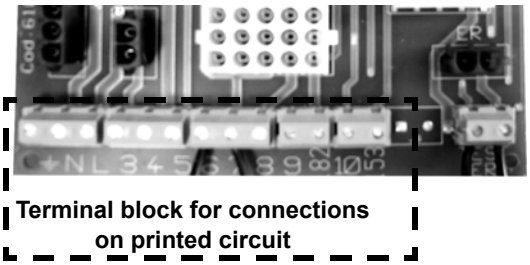


Fig. 21

Fig. 19 - Probes connection scheme for modulating burners

### *Rotation of fan motor*

Once the electrical connection of the burner is executed, remember to check the rotation of the fan motor. The motor should rotate according to the "arrow" symbol on the body. In the event of wrong rotation, reverse the three-phase supply and check again the rotation of the motor.

| | |
|---|---|
| ⚠ | **CAUTION: check the motor thermal cut-out adjustment** |

**NOTE: the burners are supplied for three-phase 400V supply, and in the case of three-phase 230V supply it is necessary to modify the electrical connections into the terminal box of the electric motor and replace the overload tripped relay.**

## ADJUSTMENTS

### *Combustion head pressure curves vs. the gas flow rate*

**Curves are referred to pressure= 0mbar in the combustion head!**

The curves referred to the gas pressure in the combustion head, depending on the gas flow rate, are referred to the burner in the combustion stage (percentage of residual $O_2$ in the flues as shown in the “Recommended combustion values” table and CO in the standard limits). During this stage, the combustion head, the gas butterfly valve and the servocontrol are at the maximum opening. Refer to Fig. 22, showing the correct way to measure the gas pressure, considering the values of pressure in combustion chamber, surveyed by means of the pressure gauge or taken from the boiler’s Technical specifications.

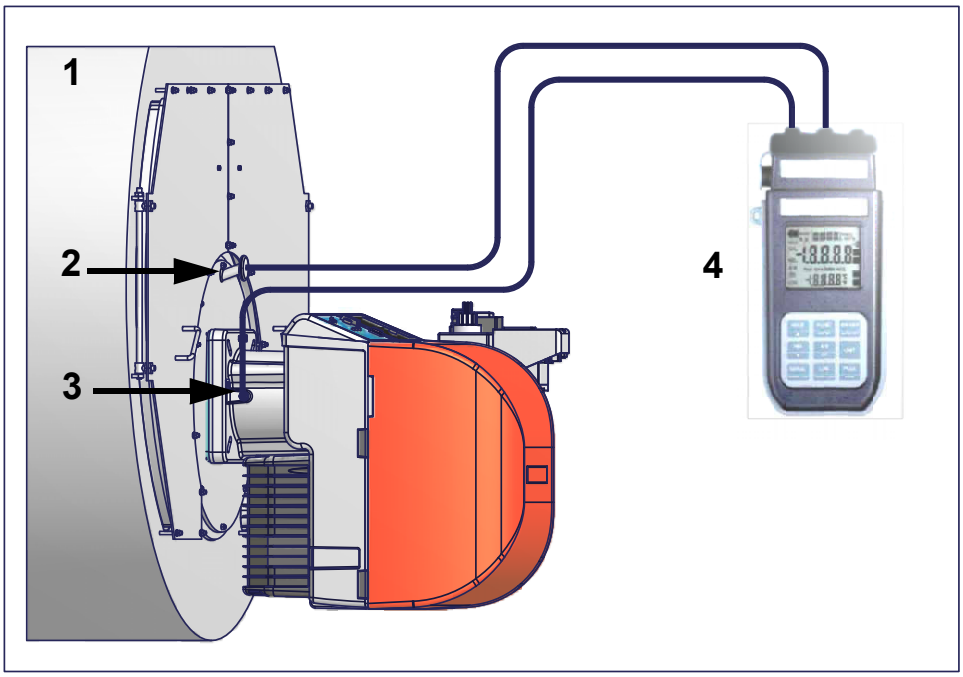


Fig. 22

**Key**

1 Generator
2 Pressure outlet on the combustion chamber
3 Gas pressure outlet on the butterfly valve
4 Differential pressure gauge

### *Measuring the gas pressure in the combustion head*

In order to measure the pressure in the combustion head, insert the pressure gauge probes: one into the generator’s pressure outlet (Fig. 22-2) to get the pressure in the combustion chamber and the other one into the butterfly valve’s pressure outlet of the burner (Fig. 22-3). On the basis of the measured differential pressure, it is possible to get the maximum flow rate: in the pressure - rate curves (showed on the next paragraph), it is easy to get the burner output in kW or Stm3/h (quoted on the x axis) from the pressure measured in the combustion head (quoted on the y axis).

**NOTE: THE PRESSURE-RATE CURVES ARE APPROXIMATE; FOR A PROPER SETTING OF THE GAS RATE, PLEASE REFER TO THE GAS METER READING.**

## *Gas pressure in combustion head vs. gas flow rate curves*

**LX60**

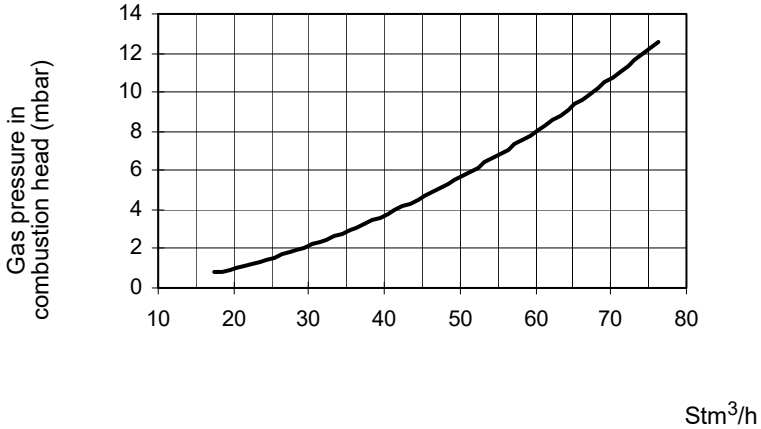


**LX65**

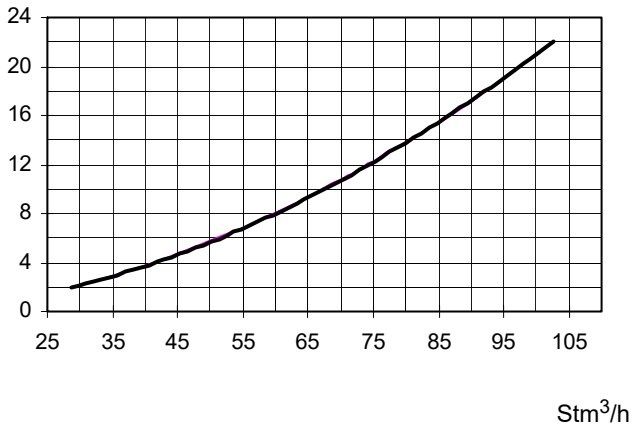


**LX72**

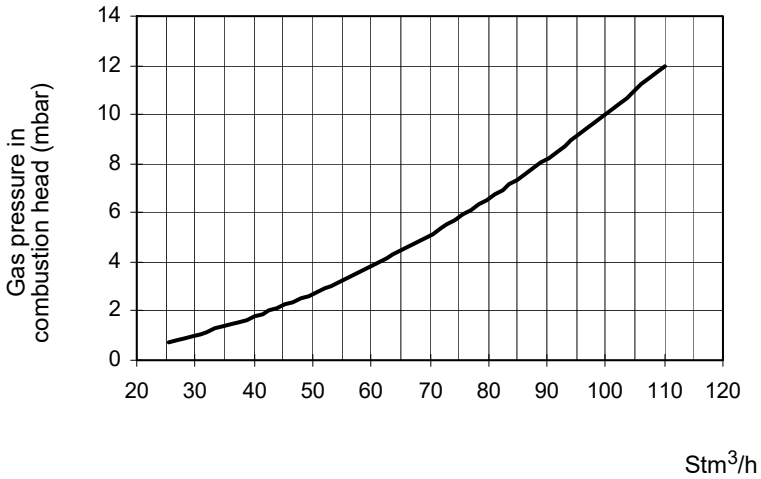

### *Adjusting air and gas flow rates*

| | |
|---|---|
| ⚠ | ***ATTENTION:*** **before starting the burner up, be sure that the manual cutoff valves are open and check that the pressure upstream the gas train complies the value quoted on paragraph "Technical specifications". Be sure that the mains switch is closed.** |
| | ***ATTENTION:*** During commissioning operations, do not let the burner operate with insufficient air flow (danger of formation of carbon monoxide); if this should happen, make the gas decrease slowly until the normal combustion values are achieved. |
| | **WARNING: NEVER LOOSE THE SEALED SCREWS! OTHERWISE, THE DEVICE WARRANTY WILL BE INVALIDATE!** |

### *Startup Output*

The start-up heat output shall not exceed 1/3 of nominal output (double-stage, progressive or fully modulating burners). In order to comply with these requirements, burners are provided with butterfly valve and/or slow-opening safety valve. The low flame ouptut must be higher than the minimum ouptut quoted in the performance curve (see "Measuring the gas pressure in the combustion head" on page 21).

| | |
|---|---|
| ⚠ | **IMPORTANT! the combustion air excess must be adjusted according to the in the following chart:** |

| **Recommended combustion parameters** | | |
|---|---|---|
| ***Fuel*** | ***Recommended (%) $CO_2$*** | ***Recommended (%) $O_2$*** |
| Natural gas | 9 ÷ 10 | 3 ÷ 4.8 |

### *Adjustments - brief description*

- Adjust the air and gas flow rates at the maximum output ("high flame") first, by means of the air damper and the valves group pressure stabiliser respectively.

Check that the combustion parameters are in the suggested limits.

- Check the flow rate measuring it on the counter or, if it is not possible, check the combustion head pressure by means of a differential pressure gauge, see "Measuring the gas pressure in the combustion head" on page 21.
- Then, adjust the combustion values corresponding to the points between maximum and minimum (progressive -fully modulating burners only): set the shape of the adjusting cam foil. The adjusting cam sets the air/gas ratio in those points, regulating the opening-closing of the air damper.
- Set, now, the low flame output, acting on the low flame microswitch of the actuator in order to avoid the low flame output increasing too much or that the flues temperature gets too low to cause condensation in the chimney.

### *Adjusting procedure*

To change the burner setting during the testing in the plant, follows the next procedure, according to the burner operation..

**DUNGS MB-DLE gas valves group:** Before starting the burner up, adjust the valves group slow opening: to set the slow opening remove cover **T**, reverse it upside down and use it as a toolto rotate screw **VR**. Decrease the ignition flow rate by screwing, increase it by unscrewing. Do not use a screwdriver on the screw **VR**!

Note: the screw **VSB** must be removed only in case of replacemente of the coil.

On the **DUNGS MBC..SE gas valves group,** set the pressure regulator to 1/3 of its stroke, using a 2.5 allen key.

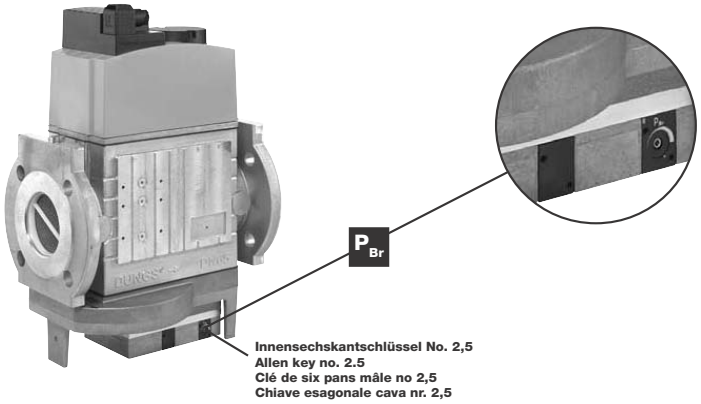

Pressure setting

1 Turn the burner on by means of its main switch **A**: if the burner locks (LED **B** on in the control panel-Fig. 29) press the RESET button (**C**) on the control panel (Fig. 29). See chapter “Operation” for further details.
2 check the fan motor rotation (see “Rotation of fan motor” on page 20)
3 Before starting the burner up, drive the high flame actuator microswitch matching the low flame one (in order to let the burner operates at the lowest output) to safely achieve the high flame stage.
4 Start the burner up by means of the thermostat series and wait unitl the pre-purge phase comes to end and that burner starts up;
5 drive the burner to high flame stage, by means fo the thermostat **TAB**.
6 Then move progressively the microswitch to higher values until it reaches the high flame position; always check the combustion values and eventually adjusting the gas by means of the valves group stabiliser.

The burner is factory-set with the combustion head at the position that refers to the "MAX" output. The maximum output setting refers to “fully-backward” position (Fig. 24). As for “fully-ahead” position, it means that the head is towards the boiler, “fully-backward” position means that the head is towards the operator. As far as the reduced output operation, progressively move the combusiton head towards the “MIN” position by means of the **VRT** screw (Fig. 23). The **ID** index shows how much the combustion head moved..

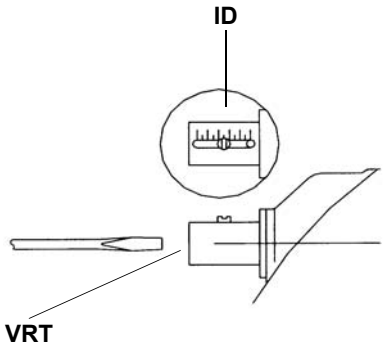


Fig. 23

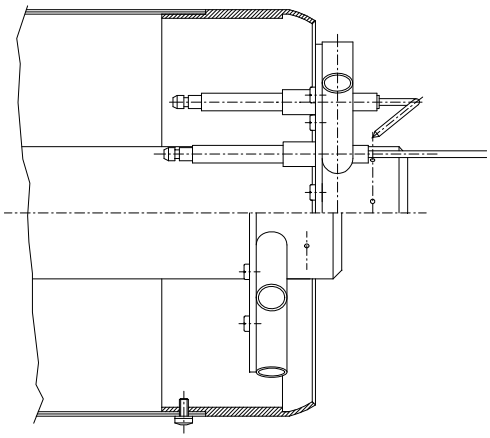

Fig. 24
Fig. 25

**Attention!** Change the combustion head position only if necessary. If so, repeat the air and gas adjustments described above.

7 go on adjusting air and gas flow rates: check, continuosly, the flue gas analisys, as to avoid combustion with little air; dose the air according to the gas flow rate change following the steps quoted below;
8 acting on the pressure stabiliser of the valves group, adjust the **gas flow rate in the high flame stage** as to meet the values requested from the boiler/utilisation:

- **Multibloc MB-DLE:** the valve is adjusted by means of the **RP** regulator after slackening the locking screw **VB** by a number of turns. By unscrewing the regulator **RP** the valve opens, screwing the valve closes. The pressure stabilizer is adjusted by operating

the screw **VS** located under the cover **C**. By screwing down the pressure is increased and by unscrewing it is reduced. **Note:** the screw **VSB** must be removed only in case of replacemente of the coil.

**- Siemens VGD valves group:** remove cap **T** and act on the **VR** adjusting screw to increase or decrease the pressure and consequently the gas rate; screwind **VR** the rate increases, unscrewing it decreases (see next figure).

**- Dungs MBC..SE valves group:** act on its pressure governor to increase or decrease the pressure and consequently the gas rate.

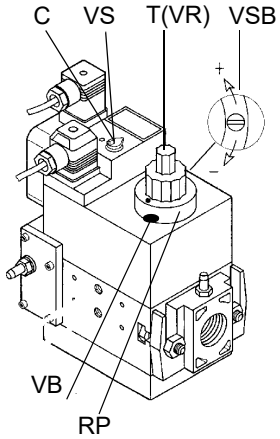


**Dungs Multibloc MB-DLE**

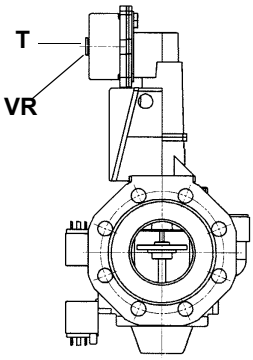


**Siemens VGD..**

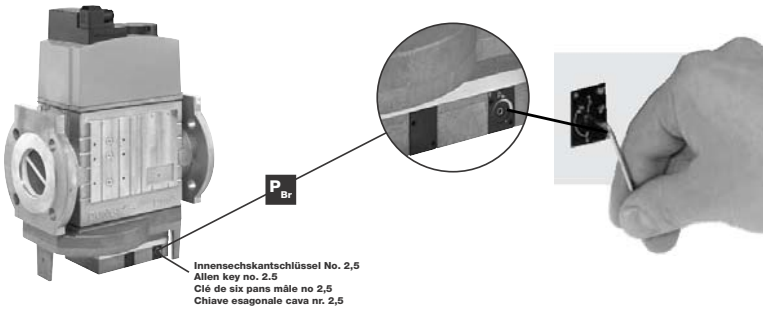


**Dungs MBC..SE**

⚠ Pressure stabiliser is factory-set. The setting values must be locally adapted to machine conditions. Important! Follow the instructions carefully!

9 .To adjust the **air flow rate in the high flame stage**, loose the **RA** nut and screw **VRA** as to get the desired air flow rate: moving the rod **T** towards the air damper shaft, the air damper opens and consequently the air flow rate increases, moving it far from the shaft the air damper closes and the air flow rate decreases.

**Note:** once the procedure is perfomed, be sure that the blocking nut **RA** is fasten.

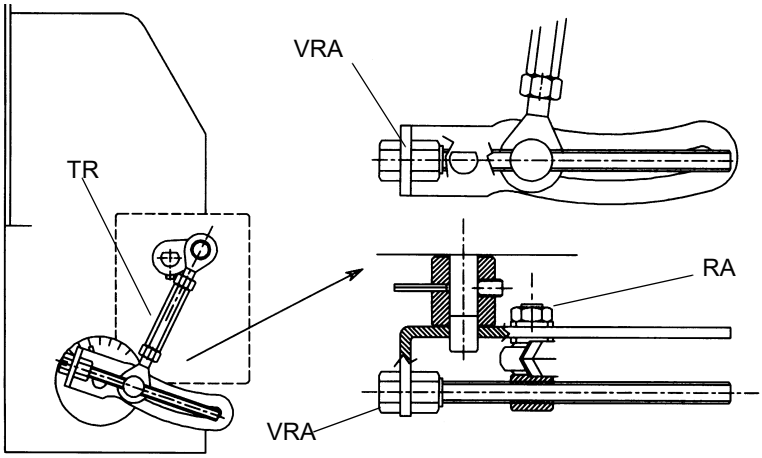


Go on adjusting the burner according to the model (double-stage, progressive, fully-modulating).

### *Double-stage burners*

10 drive the burner to the low flame stage by means of the **TAB** thermostat;

11 In order to change the gas flow rate slacken the nuts **DB** (Fig. 26) and adjust the opening angle of the gas butterfly valve by rotating the rod **TG** (clockwise rotation increases gas flow, anticlockwise rotation decreases it). The slot on the butterfly valve shaft shows the opening degree of the valve regardingthe horizontal axis (Fig. 26).

**NOTE:** At the end of settings, make sure the locking screws **RA** and **DB** are fully tightened.

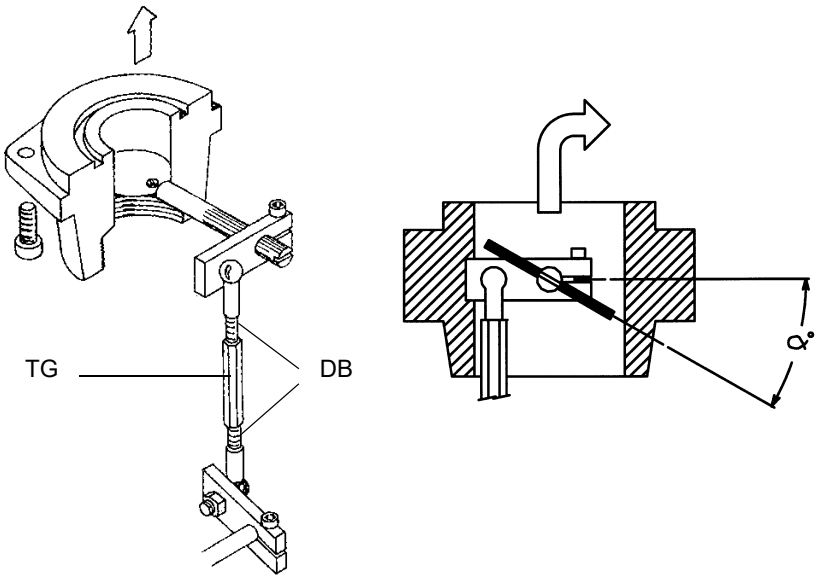


Fig. 26

12 Now adjust the pressure switches (see pag. 28).

13 If it is necessary to change the burner output in the low flame stage, move the low flame cam: the low flame position must never match the ignition position, that is why the low flame cam must be set at about 30° more than the ignition cam (when the low flame does not match the ignition cam - that is when MBC valves are provided).

14 Turn the burner off and then start it up again. If the adjustment is not correct, repeat the previous steps.

Berger STA6 B 3.41 (high-low flame burners)

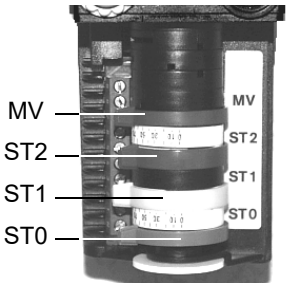


Siemens SQN72.2A4Axx (high-low flame burners)

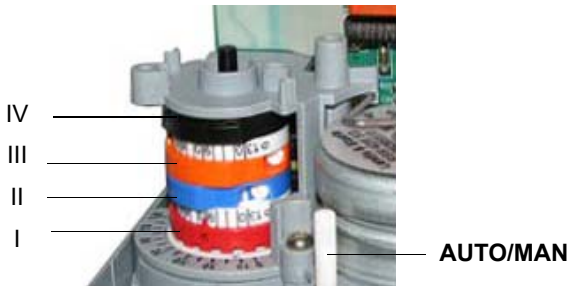


| For DUNGS MB-DLE / Siemens VGD gas valves | Actuator camsBerger STA | Siemens SQN72 |
|---|---|---|
| High flame position (set to 90°) | ST2 | I (red) |
| Low flame and ignition position | ST1 | III (orange) |
| Stand-by position (set to 0°) | ST0 | II (blue) |
| Not used | MV | IV (black) |

| For DUNGS MBCgas valves | Actuator camsBerger STA | Siemens SQN72 |
|---|---|---|
| High flame position (set to 90°) | ST2 | I (red) |
| Stand-by position (set to 0°) | ST0 | III (orange) |
| Ignition | ST1 | II (blue) |
| Low flame position | MV | IV (black) |

### *Progressive burners*

Once the procedure till step 8 described on paragraph “Adjusting procedure” on page 24 is accomplished, go on as follows:

9 set the **TAB** thermostat to the minimum in order that the actuator moves progressively towards the low flame position;

The manual air damper control is not provided on these actuators. The adjustments must be carried out by inserting a screwdriver on the screw placed inside the cam.

Berger STA6 B 3.41 (high-low flame burners)
Berger STA12B3.41 (progressive and fully modulating burners)

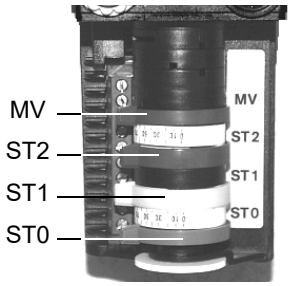


Siemens SQN72.2A4Axx (high-low flame burners)

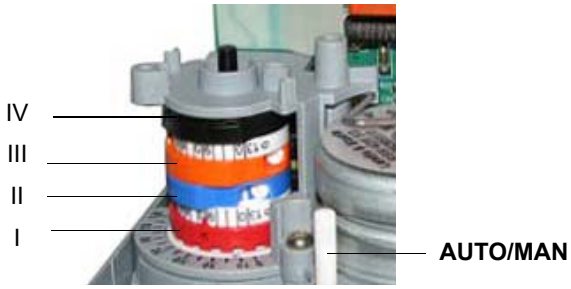


| For DUNGS MB-DLE / Siemens VGD gas valves | Actuator camsBerger STA | Siemens SQN72 |
|---|---|---|
| High flame position (set to 90°) | ST2 | I (red) |
| Low flame and ignition position | ST1 | III (orange) |
| Stand-by position (set to 0°) | ST0 | II (blue) |
| Not used | MV | IV (black) |

| For DUNGS MBCgas valves | Actuator camsBerger STA | Siemens SQN72 |
|---|---|---|
| High flame position (set to 90°) | ST2 | I (red) |
| Stand-by position (set to 0°) | ST0 | III (orange) |
| Ignition | ST1 | II (blue) |
| Low flame position | MV | IV (black) |

10 move the low flame cam to the minimum to move the actuator towards the low flame until the two bearings find the adjusting screw that refers to the lower position: screw **V** to increase the rate, unscrew to decrease.

11 Move again the low flame cam towards the minimum to meet the next screw on the adjusting cam and repeat the previous step; go on this way as to reach the desired low flame point.

12 Now adjust the pressure switches (see pag. 28).

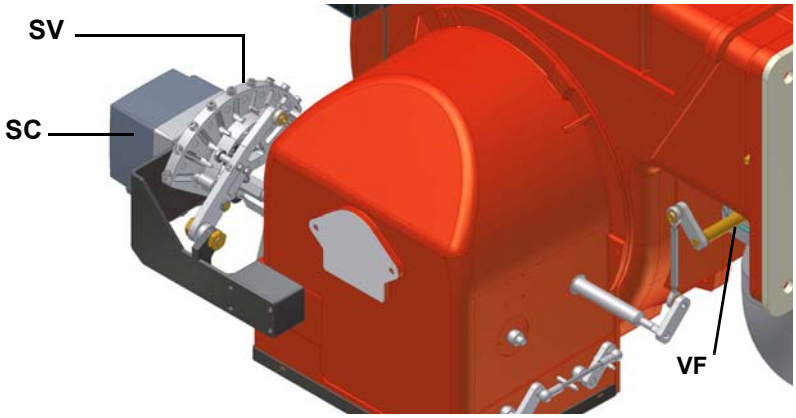


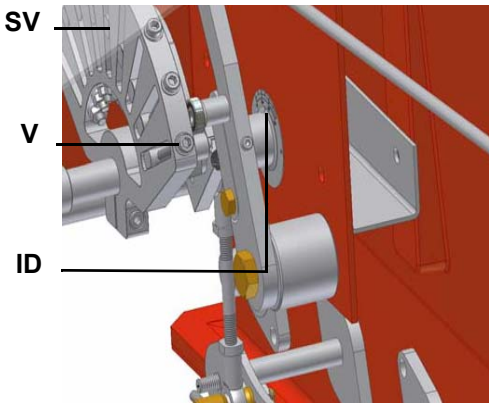


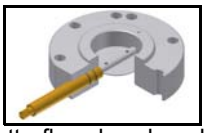

Gas butterfly valve closedт

Gas butterfly valve open

13 If it is necessary to change the burner output in the low flame stage, move the low flame cam: the low flame position must never match the ignition position, that is why the low flame cam must be set at about 30° more than the ignition cam (when the low flame can does not match the ignition cam - that is when MBC valves are provided).

Turn the burner off and then start it up again. If the adjustment is not correct, repeat the previous steps.

***Fully modulating burners***

Once the procedure till step 8 described on paragraph “Adjusting procedure” on page 24 is accomplished, go on as follows:

To adjust the air rate in low flame and in the intermediate points, proceed as follow.

9 Keep pushed for 5 seconds the EXIT button on the modulator (Fig. 27); when the LED with the hand symbol lights up, press the arrow button, driving the actuator to the maximum opening position progressively;

10 stop its stroke when it meets each screw **V**: adjust the air rate by adjusting the **V** screw that matches each bearing.

11 Push the EXIT button to quit the manual mode.

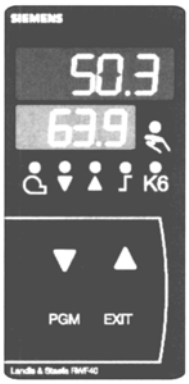


Fig. 27

Fig. 28

### *Calibration of air and gas pressure switches*

The **air pressure switch** locks the control box if the air pressure is not the one requested. If it happens, unlock the burner by means of the control box unlock pushbutton, placed on the burner control panel.

The **gas pressure switches** check the pressure to avoid the burner operate when the pressure value is not in the requested pressure range.

### *Calibration of air pressure switch*

To calibrate the air pressure switch, proceed as follows:

- Remove the transparent plastic cap.
- Once air and gas setting have been accomplished, startup the burner.
- During the pre-purge phase o the operation, turn slowly the adjusting ring nut **VR** in the clockwise direction until the burner lockout, then read the value on the pressure switch scale and set it to a value reduced by 15%.
- Repeat the ignition cycle of the burner and check it runs properly.
- Refit the transparent plastic cover on the pressure switch.

### *Calibration of low gas pressure switch*

As for the gas pressure switch calibration, proceed as follows:

- Remove the transparent plastic cap.
- While the burner is operating at the maximum output, test the gas pressure on the low gas pressure switch port.
- Slowly close the manual shut-off valve (placed upstream the pressure switch, see gas train installation diagram), until the measured pressure is reduced by 50%. Pay attention that the CO value in the flue gas does not increase.
- Check that the burner is operating correctly.
- Screw down the pressure switch adjusting ring nut until the burner lockout.
- Fully open the manual shut-off valve.
- Refit the transparent plastic cover on the pressure switch.

### *Adjusting the high gas pressure switch (when provided)*

To calibrate the high pressure switch, proceed as follows:

- remove the plastic cover;
- measure the gas pressure in the network, when flame is off;
- by means of the adjusting ring nut **VR**, set the value read on step 2, increased by the 30%;
- replace the plastic cover.

# PART II: OPERATION

## LIMITATIONS OF USE

**THE BURNER IS AN APPLIANCE DESIGNED AND CONSTRUCTED TO OPERATE ONLY AFTER BEING CORRECTLY CONNECTED TO A HEAT GENERATOR (E.G. BOILER, HOT AIR GENERATOR, FURNACE, ETC.), ANY OTHER USE IS TO BE CONSIDERED IMPROPER AND THEREFORE DANGEROUS.**

**THE USER MUST GUARANTEE THE CORRECT FITTING OF THE APPLIANCE, ENTRUSTING THE INSTALLATION OF IT TO QUALIFIED PERSONNEL AND HAVING THE FIRST COMMISSIONING OF IT CARRIED OUT BY A SERVICE CENTRE AUTHORISED BY THE COMPANY MANUFACTURING THE BURNER.**

**A FUNDAMENTAL FACTOR IN THIS RESPECT IS THE ELECTRICAL CONNECTION TO THE GENERATOR'S CONTROL AND SAFETY UNITS (CONTROL THERMOSTAT, SAFETY, ETC.) WHICH GUARANTEES CORRECT AND SAFE FUNCTIONING OF THE BURNER.**

**THEREFORE, ANY OPERATION OF THE APPLIANCE MUST BE PREVENTED WHICH DEPARTS FROM THE INSTALLATION OPERATIONS OR WHICH HAPPENS AFTER TOTAL OR PARTIAL TAMPERING WITH THESE (E.G. DISCONNECTION, EVEN PARTIAL, OF THE ELECTRICAL LEADS, OPENING THE GENERATOR DOOR, DISMANTLING OF PART OF THE BURNER).**

**NEVER OPEN OR DISMANTLE ANY COMPONENT OF THE MACHINE.**

**OPERATE ONLY THE MAIN SWITCH, WHICH THROUGH ITS EASY ACCESSIBILITY AND RAPIDITY OF OPERATION ALSO FUNCTIONS AS AN EMERGENCY SWITCH, AND ON THE RESET BUTTON.**

**IN CASE OF A BURNER SHUT-DOWN, RESET THE CONTROL BOX BY MEANS OF THE RESET PUSHBUTTON. IF A SECOND SHUT-DOWN TAKES PLACE, CALL THE TECHNICAL SERVICE, WITHOUT TRYING TO RESET FURTHER.**

**WARNING: DURING NORMAL OPERATION THE PARTS OF THE BURNER NEAREST TO THE GENERATOR (COUPLING FLANGE) CAN BECOME VERY HOT, AVOID TOUCHING THEM SO AS NOT TO GET BURNT.**

## OPERATION

| | |
|---|---|
| ⚠ | ATTENTION: BEFORE STARTING THE BURNER UP, BE SURE THAT THE MANUAL CUTOFF VALVES ARE OPEN AND CHECK THAT THE PRESSURE VALUE UPSTREAM THE GAS TRAIN MATCHES THE VALUE ON PARAGRAPH “TECHNICAL SPECIFICATIONS”). CHECK THAT THE MAINS SWITCH IS CLOSED. CAREF |

1 Turn to the “ON” position the main switch **A**, on the burner’s control panel (see Fig. 29).

2 Check the flame control box is not locked (light **B**, on) and eventually release it by means of the pushbutton **C** (reset - for more information about the device, please refer to the manual’s Appendix).

3 Check the series of thermostats or pressure switches gives the burner the start signal for operating.

4 Check that the gas pressure in the gas network is sufficient (if the pressure is normal, the lamp **E** lights).

**Only burners provided with the gas proving system:** the check cycle of the gas proving system starts; the end of this check is signalled by the light of the LC LED on the device (see picture below). When the valves check come to end, the startup cycle of the burner begins. In the case of a leak in a valve, the gas proving system locks and the lamp **E** lights (on the burner control panel). To reset the device press its **LB** pushbutton (see picture below).

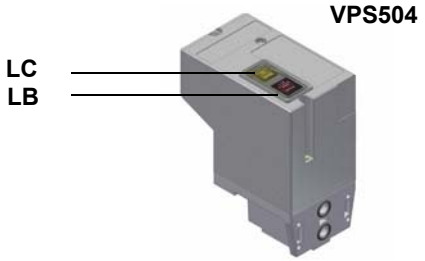


5 The startup cycle begins, the actuator drives the air damper to the maximum opening position, the fan motor starts and the pre-purge phase begins. During the pre-purge phase, the complete opening of the air damper is signalled by the lamp **F** on the burner control panel.

6 At the end of the pre-purge phase, the air damper goes to the ignition position, the ignition transformer comes on (signalled by the lamp **H**) and few seconds later the solenoid valves EV1 and EV2 are energised (lights **I** and **L** on the control panel).

7 Few seconds after the opening of the valves, the ignition transformer turns off and the lamp **H** turns off as well, then:

- **High-low flame burners:** the burner is in low flame stage (light **G** is on); some seconds later the high flame operation begins and the burner switches automatically to high flame (light **F** is on) or keeps on operating in low flame stage, according to the plant needs.
- **Progressive and fully modulating burners** - few seconds after the gas valve opening, the ignition transformer is de-energised. The burner is in low flame operation and some seconds later the two-stages operation begins; the burner increases or decreases its output, directly driven by the external thermostat (progressive version) or by the modulator (**P** in Fig. 29, fully modulating burners only).

**Fig. 29 - Control panel**

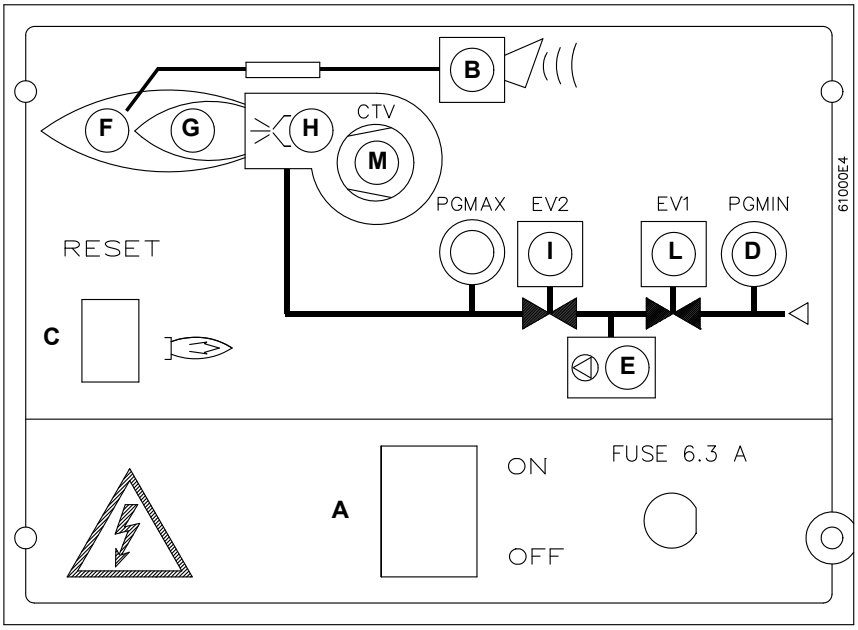


P

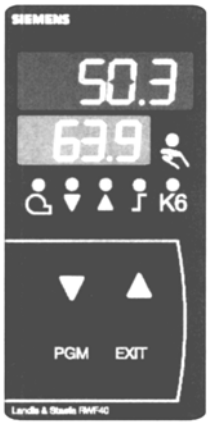


Q

**Keys**

A Main switch on-off
B Lockout indicator light
C Reset pushbutton for flame control box
D Gas pressure switch consent indicator light
E Gas proving system lockout indicator light (only on burners with leakage control device)
F High flame operation indicator light (or air damper open during pre-purgue phase)
G Low flame operation indicator light
H Ignition tranformer operation indicator light
I Valve in operation indicator light for EV2
L Valve in operation indicator light for EV1
M Indicator light for fan motor overload tripped (only three-phase burners); to reset the overload tripped, the electrical board must be opened).
P Modulator (fitted only on fully modulating burners)
Q Operation manual selector: 0) stop - 1) high flame - 2) low flame - 3) automatic

## PART III: MAINTENANCE

At least once a year carry out the maintenance operations listed below. In the case of seasonal servicing, it is recommended to carry out the maintenance at the end of each heating season; in the case of continuous operation the maintenance is carried out every 6 months.

| | |
|---|---|
| ⚠ | **WARNING: ALL OPERATIONS ON THE BURNER MUST BE CARRIED OUT WITH THE MAINS DISCONNECTED AND THE FUEL MANAUL CUTOFF VALVES CLOSED!** |
| | **ATTENTION: READ CAREFULLY THE "WARNINGS" CHAPTER AT THE BEGINNIG OF THIS MANUAL..** |

### ROUTINE MAINTENANCE

- Cleane and check the gas filter cartridge, if necessary replace it (see next paragraphs).
- Remove, check and clean the combustion head (see Fig. 34)
- Check ignition electrode, clean, adjust and, if necessary, replace (see page 34)
- Check the detection electrode, clean, adjust and, if necessary, replace; in case of doubt, check the detection circuit following the diagram in Fig. 38 and Fig. 39, after turning the burner back into operation.

.Cleaning and greasing of leverages and rotating parts.

-

| | |
|---|---|
| ⚠ | **ATTENTION**when servicing, if it was necessary to disassemble the gas train parts, remember to execute the gas proving test, once the gas train is reassembled, according to the procedure imposed by the law in force. |

### *Removing the filter in theMULTIBLOC DUNGS MB-DLE 415 - 420 B01 1" 1/2 - 2"*

- Check the filter at least once a year!
- Change the filter if the pressure difference between pressure connection 1 and 2 (Fig. 30-Fig. 31) $\Delta p$> 10 mbar.
- Change the filter if the pressure difference between pressure connection 1 and 2 (Fig. 30-Fig. 31) is twice as high compared to the last check.

You can change the filter without removing the fitting.

1 Interrupt the gas supply closing the on-off valve.
2 Remove screws 1 ÷ 6 (Fig. 32).
3 Change filter insert.
4 Re-insert filter housing, screw in screws 1 ÷ 6 without using any force and fasten.
5 Perform leakage and functional test, $p_{max.}$ = 360 mbar.
6 Pay attention that dirt does not fall inside the valve.

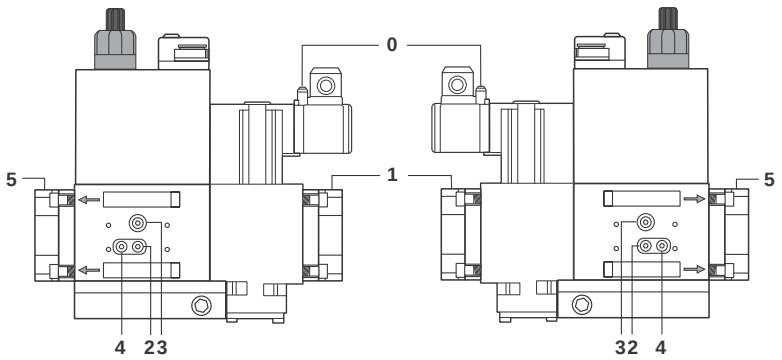


Fig. 30

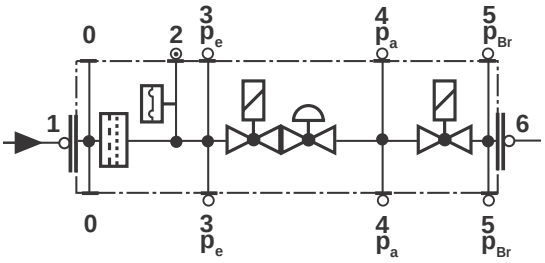


Fig. 31

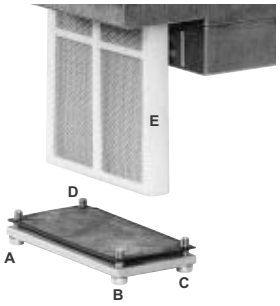


Fig. 32

### *Inspection and replacement of the MULTIBLOC DUNGS MBC..SE filter (Threaded valves group)*

Inspect the filter at least once a year.

- Change the filter, if pressure value between pressure connections 1 and 2 is greather than 10 mbar.
- Change the filter, if pressure value between pressure connections 1 and 2 is twice as high compared to the last inspection.

1. Interrupt gas supply: close ball valve
2. Remove screws 1-2
3. Replace the filter insert 3
4. Screw in screws 1-2 without use force to fasten.
5. Perform leakage and funcion test.
6. Pay attention that dirt does not fall inside the valve.

Space requirements for fitting filter, A: from 150 to 230 mm.

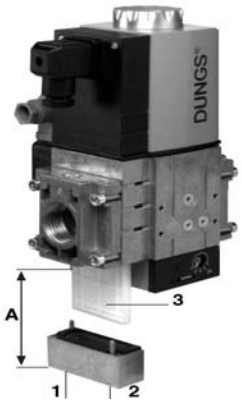


Fig.33

### *Gas filter maintenance*

| | |
|---|---|
| ⚠ | **ATTENTION:** Before opening the filter, close the manual cutoff valve downstream the filter and bleed the gas; check that inside the filter there is no pressurised gas. |

To clean or remove the filter, proceed as follows:

1 remove the cap unscrewing the fixing screws (A);
2 remove the filtering cartridge (B), clean it using water and soap, blow it with compressed air(or replace it, if necessary)
3 replace the cartridge in its proper position taking care to place it inbetween the guides as not to hamper the cap replacement;
4 be sure to replace the “O” ring into its place (C) and replace the cover fastening by the proper screws (A).

A

B

C

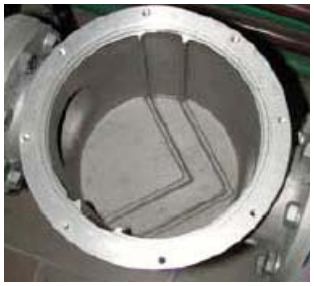

### *Removing the combustion head*

**Type LX60**

- Remove cover C.
- Unscrew the two screws S holding in position the washer and then unscrew VRT to free the threaded rod AR.
- Unscrew the screws V holding in position the manifold G and pull out the complete group as shown in figure.

**Note:** for the subsequent assembly carry out the above described operations in the reverse order, checking the correct position of the OR ring.

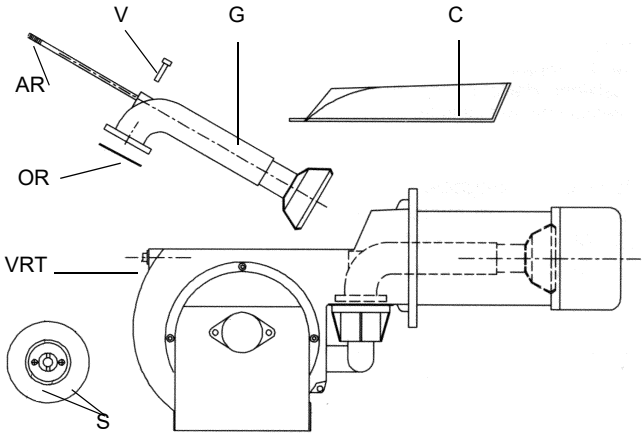


Fig. 24

**Type LX65 / LX72**

- Remove the burner cover C.
- Unscrew the screws V holding in position the manifold G and pull out the complete group as shown in figure.

Note: for the subsequent assembly carry out the above described operations in the reverse order, checking the correct position of the OR ring.

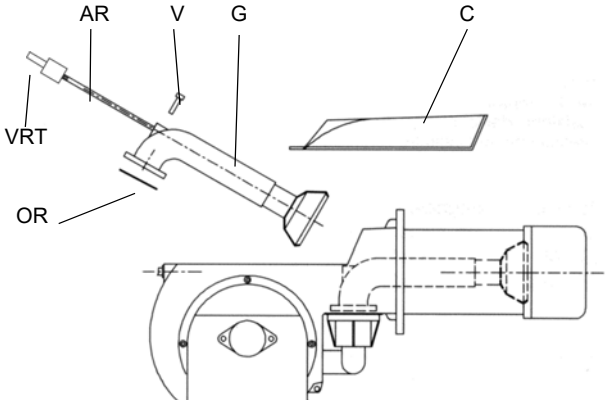


Fig. 25

### *Adjusting the electrodes*

**Important Note: Check the ignition and detection electrodes after removing/adjusting the combustion head.**

| | |
|---|---|
| ⚠ | **ATTENTION:** avoid the ignition and detection electrodes to contact metallic parts (blast tube, head, etc.), otherwise the boiler's operation would be compromised. Check the electrodes position after any intervention on the combustion head. |

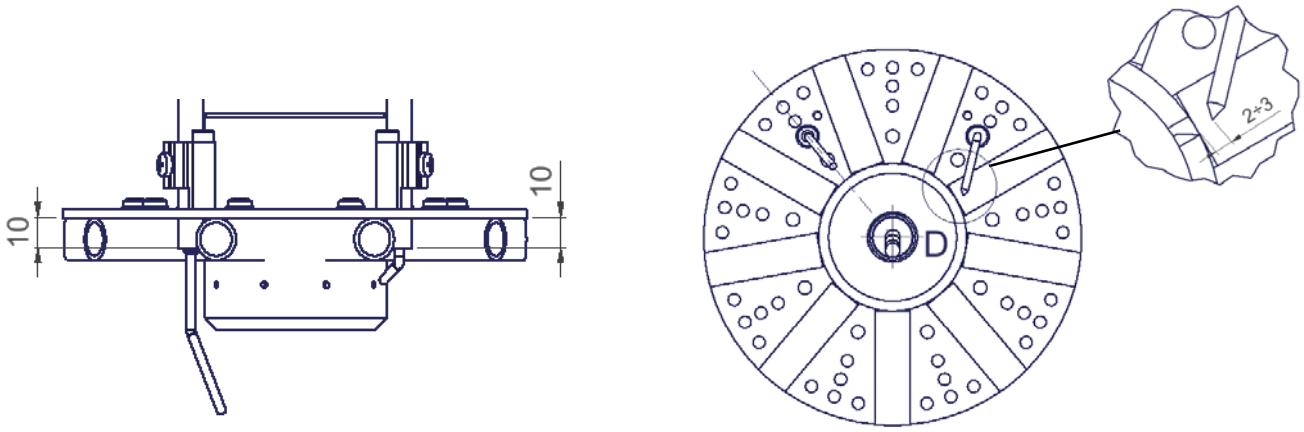


Fig. 26

### *Replacing the electrodes*

| | |
|---|---|
| ⚠ | **ATTENTION:** avoid the ignition and detection electrodes to contact metallic parts (blast tube, head, etc.), otherwise the boiler's operation would be compromised. Check the electrodes position after any intervention on the combustion head. |

To replace the electrodes, proceed as follows:

1 remove the burner cover
2 disconnect the electrodes cables;
3 loose the screws of the electrodes (**VB**);
4 remove the ignition electrodes and replace them paying attention to the measures shown in figure.

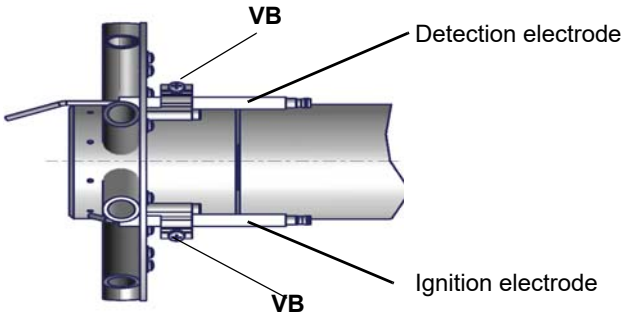


Fig. 37

### *Checking the detection current*

To measure the detection signals refer to the diagram on the next picture.

If the signal is less than the indicated value, check the position of the detection electrode/UV detector, the electrical contacts and if necessary replace the detection electrode/UVdetector .

| Control box | Minimum detection signal |
|---|---|
| Siemens LME (with electrode) | 3 µA |
| Siemens LME (with UV detector) | 3 µA (Fig. 38) - 200 µA (Fig. 39) |

**Test point for burners with PCB provided**

To check the detection current, remove the jumper between terminals and connect the microamperemeter (see next picture).

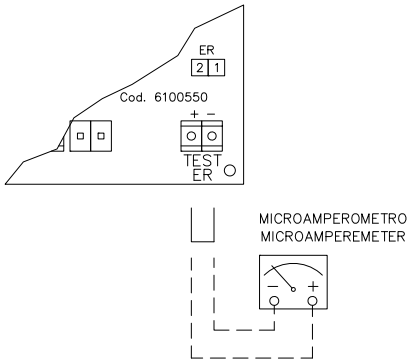


Fig. 38

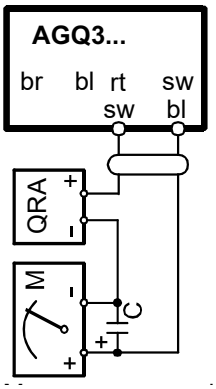


Fig. 39

### *Seasonal stop*

To stop the burner in the seasonal stop, proceed as follows:

1 turn the burner's main switch to 0 (Off position)

2 disconnect the power mains
3 close the fuel cock of the supply line

### *Burner disposal*

In case of disposal, follow the instructions according to the laws in force in your country about the “Disposal of materials”.

## TROUBLESHOOTING

| CAUSE / FAULT | BURNER DOESN'T START | CONTINUE PRE-PURGUE | BURNER DOESN'T START AND LOCKS | BURNER DOESN'T START AND REPEATS THE CYCLE | BURNER STARTS AND REPEATS THE CYCLE | BURNER DOESN'T SWITCH TO HIGH FLAME | BURNER'S LOCKOUT DURING OPERATION | BURNER STOPS AND REPEATS CYCLE DURING OPERATION | BURNER'S LOCKOUT AFTER START | THE FLAME CONTROL DEV. REPEATS THE CYCLE WITHOUT GIVE CONSENT |
|---|---|---|---|---|---|---|---|---|---|---|
| MAIN SWITCH OPEN | ● | | | | | | | | | |
| ABSENCE OF GAS | ● | | | | | | | | | |
| MINIMUM GAS PRESSURE SWITCH FAULT OR BAD SETTING | ● | | | ● | ● | | | ● | | |
| BOILER THERMOSTATS OPEN | ● | | | | | | | | | |
| OVERLOAD TRIPPED INTERVENTION | ● | | | | | | | | | |
| FUSES INTERVENTION | ● | | | | | | | | | |
| AIR PRESSURE SWITCH FAULT OR BAD SETTING | ● | | ● | | | | ● | | | ● |
| DEFECTIVE FLAME CONTROL BOX | ● | ● | ● | | | | ● | | | |
| DEFECTIVE AIR DAMPER ACTUATOR | | ● | | | | | | | | |
| DEFECTIVE IGNITION TRANSFORMER | | | ● | | | | | | | |
| IGNITION ELECTRODE WRONG POSITION | | | ● | | | | | | | |
| BUTTERFLY VALVE BAD SETTING | | | ● | | | | | | | |
| DEFECTIVE GAS GOVERNOR | | | | ● | ● | | | ● | | |
| DEFECTIVE HI-LO FLAME THERMOSTAT | | | | | | ● | | | | |
| ACTUATOR CAM BAD SETTING | | | | | | ● | | | | |
| DETECTION ELECTRODE BAD POSITION OR DEFECTIVE DETECTION CIRCUIT | | | | | | | ● | | ● | |
| REVERSED PHASE AND NEUTRAL CONNECTION | | | | | | | | | ● | |
| PHASE-PHASE SUPPLY OR PRESENCE OF VOLTAGE ON NEUTRAL* | | | | | | | | | ● | |

* In this case insert an RC filter (see Fig. 17)

## BURNER EXPLODED VIEW

**LX60**

| ITEM | DESCRIPTION |
|---|---|
| 1 | COMBUSTION HEAD |
| 1.1 | DETECTION ELECTRODE |
| 1.2 | IGNITION ELECTRODE |
| 2 | BLAST TUBE |
| 3.1 | “O“ RING |
| 3.2 | BUTTERFLY GAS VALVE |
| 3.3 | GAS MANIFOLD |
| 4.1 | FAN WHEEL |
| 4.2 | MOTOR |
| 5.1 | GAS VALVES GROUP WITH GOVERNOR |
| 5.2 | THREADED GAS PIPE |
| 5.3 | ELBOW |
| 5.4 | REDUCTION |
| 5.5 | FLANGE |
| 5.6 | GAS PROVING SYSTEM |
| 6 | AIR INLET CONE |
| 7 | BURNER HOUSING |
| 7.1 | COVER |
| 8 | GENERATOR GASKET |
| 9 | AIR PRESSURE SWITCH PIPE |
| 10 | INSPECTION GLASS |
| 11 | AIR PRESSURE SWITCH |
| 12.1.1 | LEVERAGE |
| 12.1.2 | ADJUSTING CAM |
| 12.1.3 | ACTUATOR |
| 12.1.4 | ACTUATOR SHAFT |

| ITEM | DESCRIPTION |
|---|---|
| 12.1.5 | BRACKET |
| 12.2.1 | SCREW |
| 12.2.2 | SCREW |
| 12.2.3 | CAM |
| 12.2.4 | LEVERAGE |
| 12.2.5 | ROD |
| 12.2.6 | JOINT |
| 12.2.7 | JOINT |
| 12.3 | INDEX LABEL |
| 12.4 | AIR INTAKE DAMPER |
| 12.5 | AIR INTAKE |
| 12.6 | LOUVER SHAFT |
| 12.7 | THROTTLE SHAFT |
| 12.8 | ADJUSTING CAM SHAFT |
| 12.9 | LEVERAGE |
| 12.10 | ROD |
| 12.11 | ROD |
| 12.12 | JOINT |
| 12.13 | JOINT |
| 13 | HEAD ADJUSTING SCREW |
| 14.1 | FRONT CONTROL PANEL |
| 14.2 | BOARD |
| 14.3 | COVER |
| 15 | CONNECTOR |
| | |
| | |

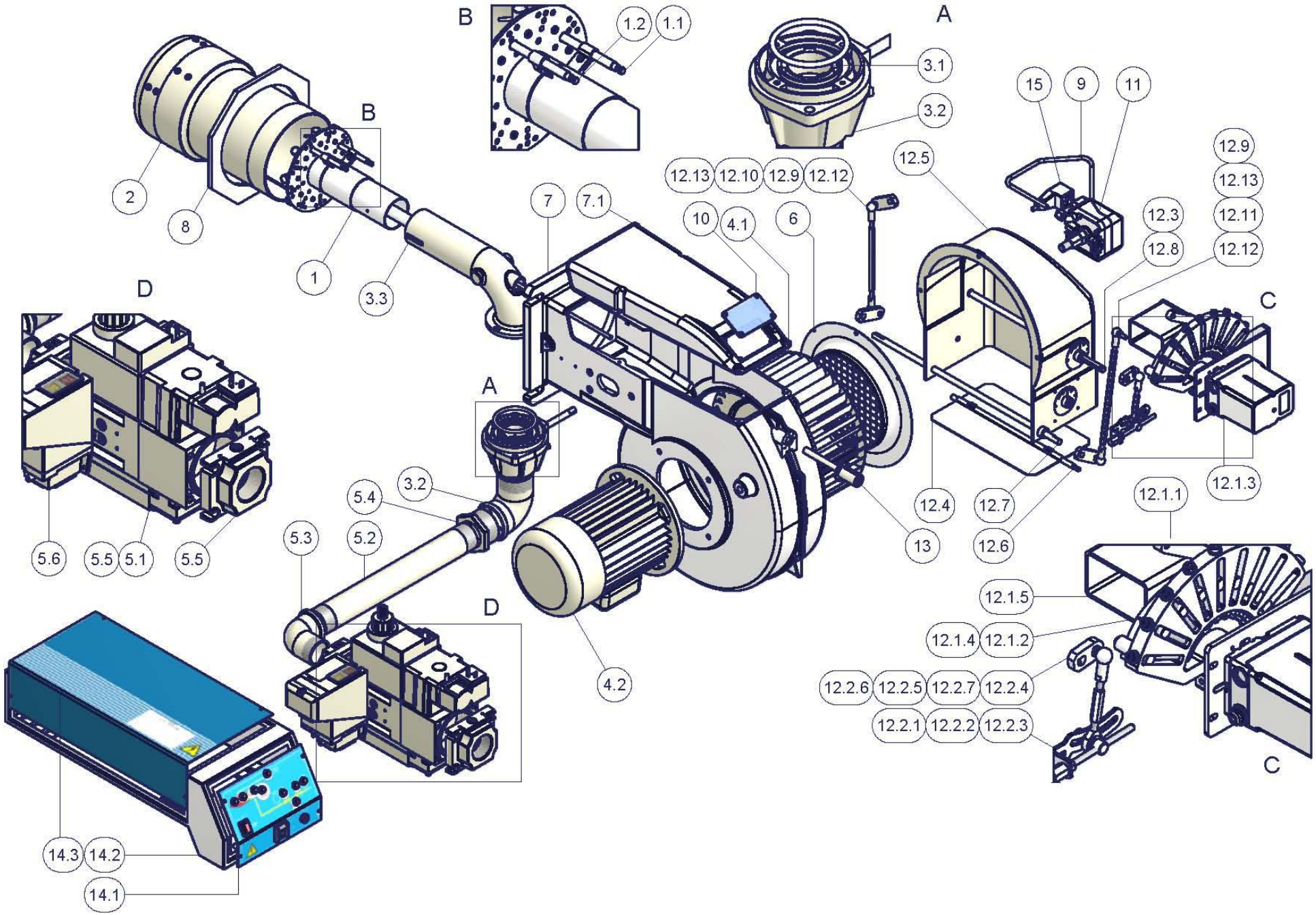
A
B
C
D
1
1.1
1.2
2
3.1
3.2
3.3
4.1
4.2
5.1
5.2
5.3
5.4
5.5
5.6
6
7
7.1
8
9
10
11
12.1.1
12.1.2
12.1.3
12.1.4
12.1.5
12.2.1
12.2.2
12.2.3
12.2.4
12.2.5
12.2.6
12.2.7
12.3
12.4
12.5
12.6
12.7
12.8
12.9
12.10
12.11
12.12
12.13
13
14.1
14.2
14.3
15

**LX65 - LX72**

| ITEM | DESCRIPTION |
|---|---|
| 1 | BLAST TUBE |
| 2.1 | FAN WHEEL |
| 2.2 | MOTOR |
| 3.1 | GAS FILTER |
| 3.2 | FLANGE |
| 3.3 | GASKET |
| 3.4 | GASKET |
| 3.5 | FLANGED PIPE |
| 3.6.1 | PRESSURE SWITCH |
| 3.6.2 | GAS VALVE |
| 3.6.3 | “SKP” ACTUATOR |
| 3.6.4 | “SKP” ACTUATOR |
| 3.6.5 | GAS PROVING SYSTEM |
| 4 | AIR INLET CONE |
| 5 | BURNER HOUSING |
| 5.1 | COVER |
| 5.2 | COVER EXTENSION |
| 6 | GASKET |
| 7 | AIR PRESSURE SWITCH PIPE |
| 8 | “O” RING |
| 9 | INSPECTION GLASS |
| 10 | BUTTERFLY GAS VALVE |
| 11 | MANIFOLD |
| 12 | COMBUSTION HEAD |
| 12.1 | DETECTION ELECTRODE |
| 12.2 | IGNITION ELECTRODE |
| 13 | AIR PRESSURE SWITCH ASS.Y |
| 14.1.1 | LEVERAGE |
| 14.1.2 | ADJUSTING CAM |
| 14.1.3 | ACTUATOR |
| 14.1.4 | CONNECTOR |

| ITEM | DESCRIPTION |
|---|---|
| 14.1.5 | BRACKET |
| 14.2.1 | NUT |
| 14.2.2 | SCREW |
| 14.2.3 | ADJSUTING CAM |
| 14.2.4 | CONNECTING ROD |
| 14.2.5 | ROD |
| 14.2.6 | JOINT |
| 14.2.7 | JOINT |
| 14.3 | AIR DAMPER |
| 14.4 | AIR DAMPER |
| 14.5 | AIR INLET |
| 14.6 | AIR DAMPER SHAFT |
| 14.7 | AIR DAMPER SHAFT |
| 14.8 | PIN |
| 14.9 | PIN |
| 14.10 | CONNECTING ROD |
| 14.11 | ROD |
| 14.12 | ROD |
| 14.13 | JOINT |
| 14.14 | JOINT |
| 15 | SCREW |
| 16.1 | ELECTRIC BOARD |
| 16.2.1 | RED LED |
| 16.2.2 | RED LED |
| 16.2.3 | UNLOCKING PUSHBUTTON |
| 16.2.4 | BUTTON COVER |
| 16.2.5 | SWITCH |
| 16.2.6 | FUSE |
| 16.2.7 | FRONT CONTROL PANEL |
| 16.3 | BOARD COVER |
| 17 | CONNECTOR |

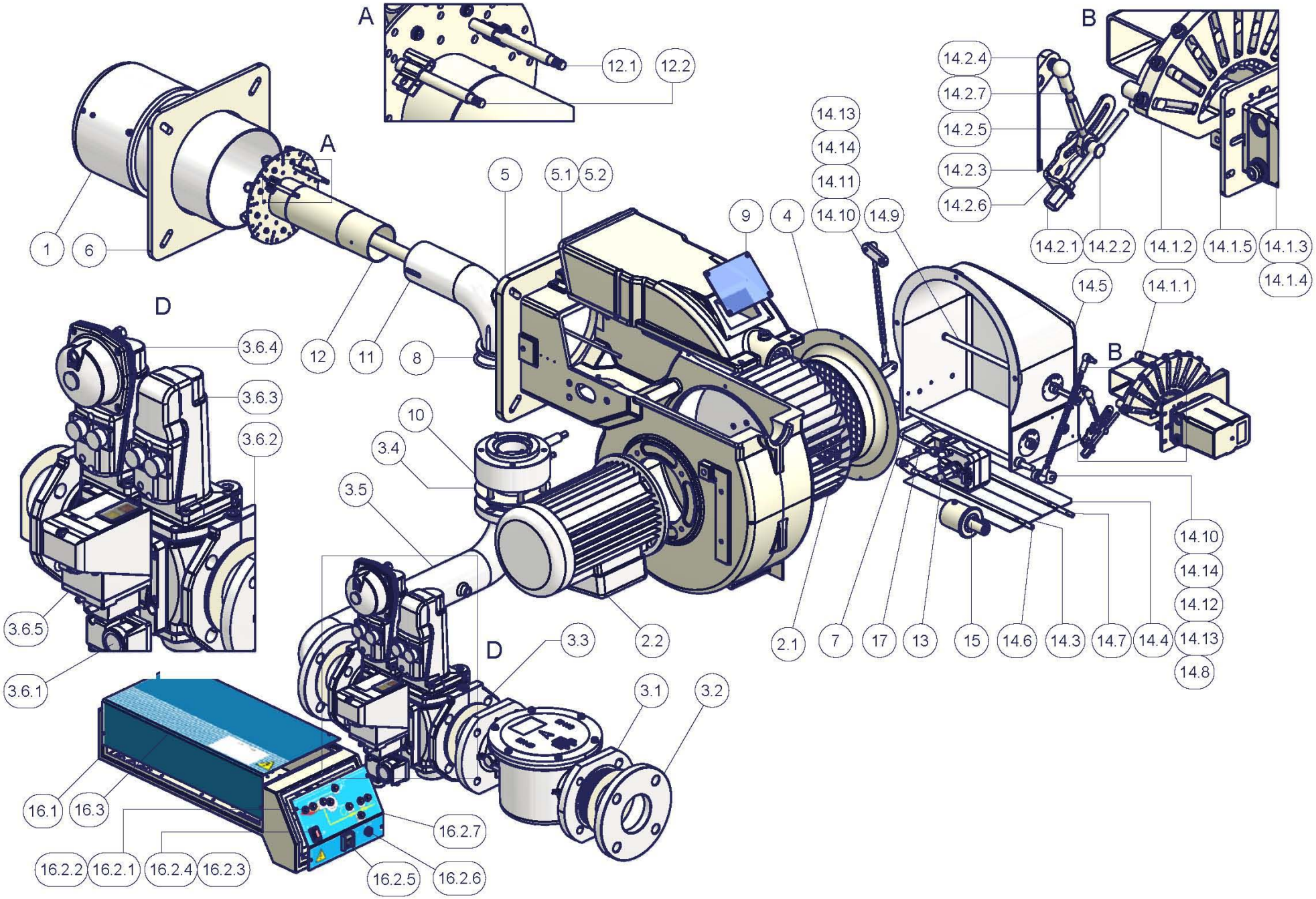
A
12.1
12.2
B
14.2.4
14.2.7
14.2.5
14.2.3
14.2.6
14.13
14.14
14.11
14.10
14.9
14.2.1
14.2.2
14.1.2
14.1.5
14.1.3
14.1.4
14.5
14.1.1
A
5
5.1
5.2
9
4
1
6
D
3.6.4
12
11
8
B
3.6.3
10
3.6.2
3.4
3.5
14.10
14.14
14.12
14.13
14.8
3.6.5
3.6.1
D
3.3
2.2
2.1
7
17
13
15
14.6
14.3
14.7
14.4
3.1
3.2
16.1
16.3
16.2.7
16.2.2
16.2.1
16.2.4
16.2.3
16.2.5
16.2.6

## WIRING DIAGRAMS

**ATTENTION:**

1 - Power supply: 400V 50Hz 3N a.c.three-phase and 230V 50Hz 1N a.c. monophase
2 - Don’t reverse phase and neutral
3 - Ensure the burner is properly earthed

# VERSIONE ALTA-BASSA FIAMMA "AB" / PROGRESSIVO "PR"
# "AB" HIGH-LOW / "PR" PROGRESSIVE VERSION

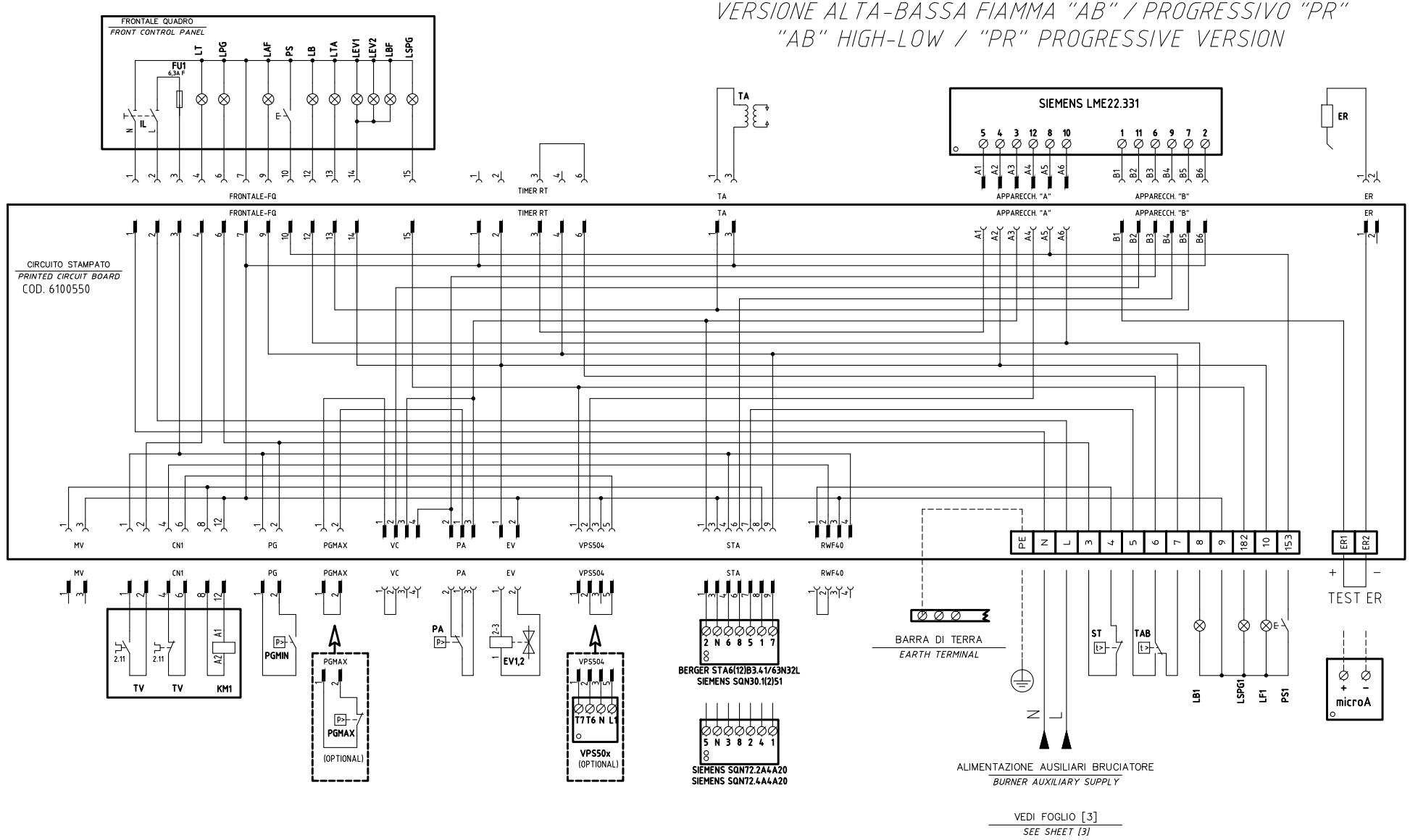


| | | | |
|---|---|---|---|
| Data 18/01/2012 | | PREC. | FOGLIO |
| Revisione 02 | | / | 1 |
| Dis. N. 18 – 236 | | SEGUE | TOTALE |
| | | 2 | 4 |

# VERSIONE MODULANTE "MD"
# "MD" MODULATING VERSION

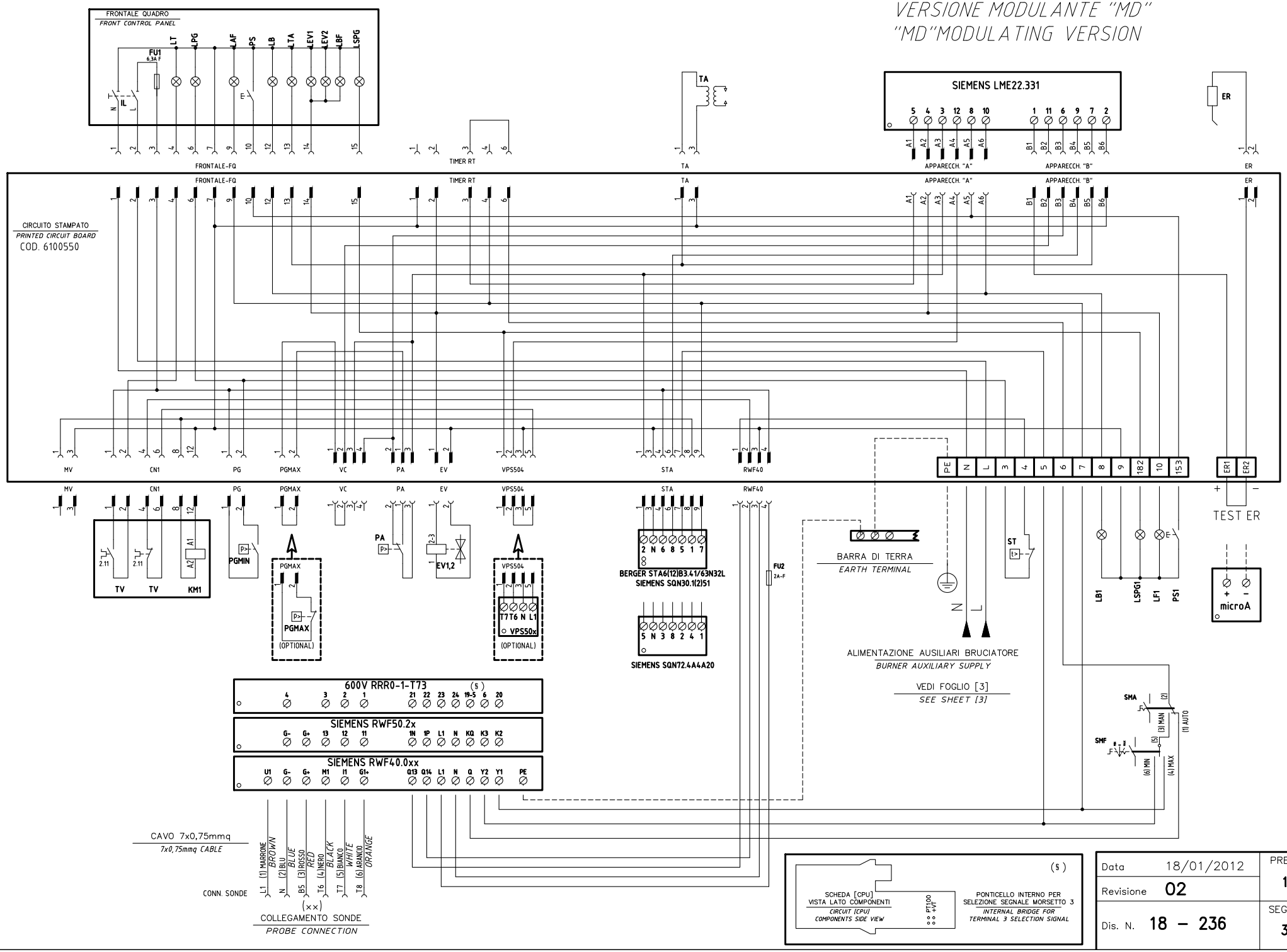


| | | | |
|---|---|---|---|
| Data | 18/01/2012 | PREC. 1 | FOGLIO 2 |
| Revisione | 02 | | |
| Dis. N. | 18 – 236 | SEGUE 3 | TOTALE 4 |

(××)
ATTENZIONE COLLEGAMENTO SONDE CON CONNETTORE 7 POLI
*WARNING PROBE CONNECTION WITH 7 PINS CONNECTOR*

## 600V RRR0-1-T73

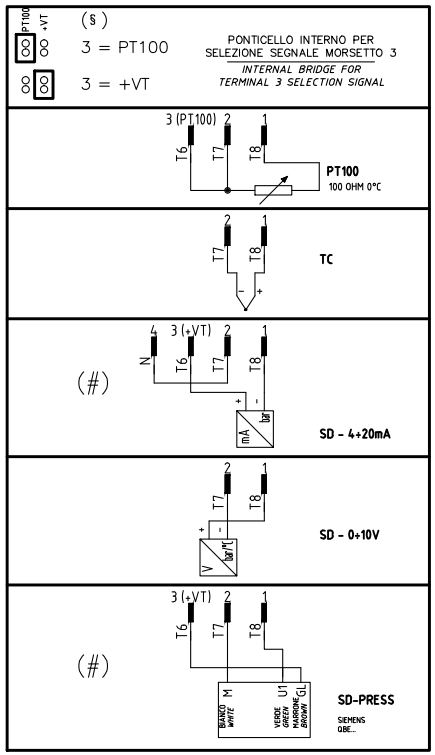


## RWF40.0x0

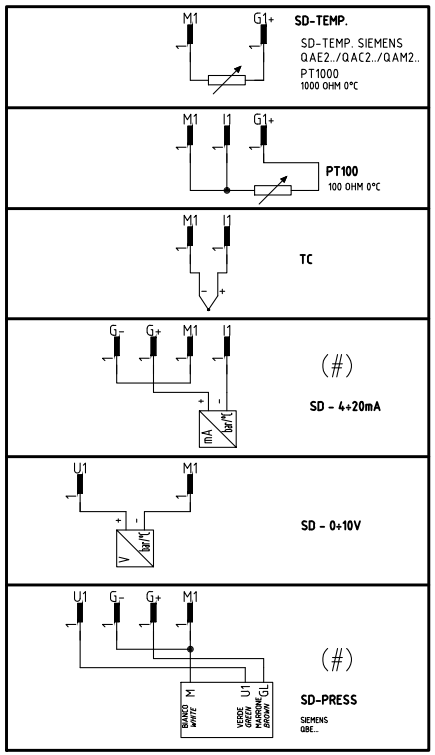


## RWF50.2x

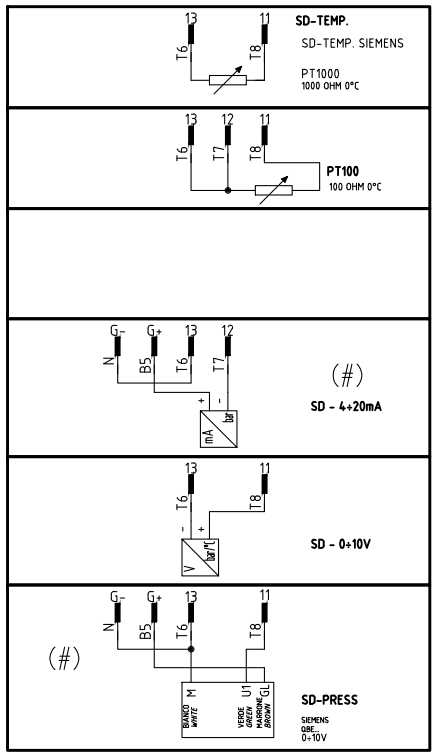


(#)
COLLEGAMENTO SOLO PER TRASDUTTORI PASSIVI
*TRASDUCER PASSIVE CONNECTION ONLY*

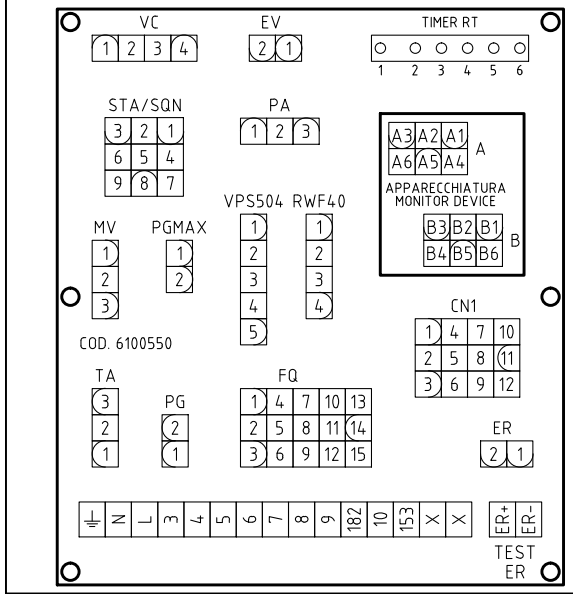


SERVOCOMANDO SERRANDA ARIA
*AIR DAMPER ACTUATOR*
BERGER STA6(12)B3.41/63N32L

| | |
|---|---|
| ST2 | ALTA FIAMMA *HIGH FLAME* |
| ST0 | SOSTA *STAND-BY* |
| ST1 | BASSA FIAMMA *LOW FLAME* |
| MV | NON USATA *NOT USED* |

SERVOCOMANDO SERRANDA ARIA (ALTERNATIVO)
*AIR DAMPER ACTUATOR (ALTERNATIVE)*
SIEMENS SQN72.xA4A20

| | |
|---|---|
| I (ROSSO) *I (RED)* | ALTA FIAMMA *HIGH FLAME* |
| II (BLU) *II (BLUE)* | SOSTA *STAND-BY* |
| III (ARANCIO) *III (ORANGE)* | BASSA FIAMMA *LOW FLAME* |
| IV (NERO) *IV (BLACK)* | NON USATA *NOT USED* |

SERVOCOMANDO SERRANDA ARIA (ALTERNATIVO)
*AIR DAMPER ACTUATOR (ALTERNATIVE)*
SIEMENS SQN30.1(2)51A

| | |
|---|---|
| I | ALTA FIAMMA *HIGH FLAME* |
| II | SOSTA *STAND-BY* |
| III | BASSA FIAMMA *LOW FLAME* |
| V | NON USATA *NOT USED* |

# QG - MC1

MORSETTIERA COLLEGAMENTO LINEA E MOTORE TRIFASE
*MOTOR THREE PHASES AND ELECTRIC SUPPLY CONNECTION TERMINAL BOARD*

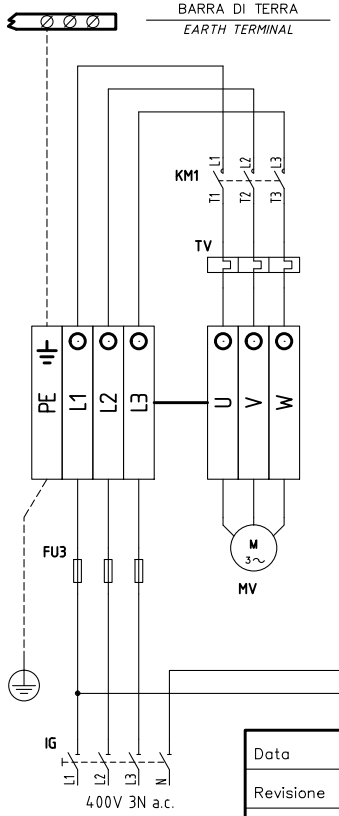


ALIMENTAZIONE AUSILIARI BRUCIATORE
*BURNER AUXILIARY SUPPLY*

VEDI FOGLIO [1 / 2]
*SEE SHEET [1 / 2]*

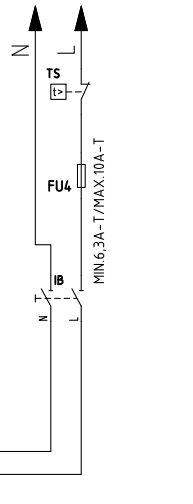


| | | | |
|---|---|---|---|
| Data | 18/01/2012 | PREC. 2 | FOGLIO 3 |
| Revisione | 02 | | |
| Dis. N. | 18 – 236 | SEGUE 4 | TOTALE 4 |

| Sigla/Item | Funzione | Function |
|---|---|---|
| 600V RRR0-1-T73 | REGOLATORE MODULANTE (ALTERNATIVO) | BURNER MODULATOR (ALTERNATIVE) |
| BERGER STA6(12)B3.41/63N32L | SERVOCOMANDO SERRANDA ARIA | AIR DAMPER ACTUATOR |
| ER | ELETTRODO RILEVAZIONE FIAMMA | FLAME DETECTION ELECTRODE |
| EV1,2 | ELETTROVALVOLE GAS (O GRUPPO VALVOLE) | GAS ELECTRO-VALVES (OR VALVES GROUP) |
| FU1 | FUSIBILE DI LINEA | LINE FUSE |
| FU2 | FUSIBILE AUSILIARIO | AUXILIARY FUSE |
| FU3 | FUSIBILI LINEA MOTORE VENTILATORE | FAN MOTOR LINE FUSES |
| FU4 | FUSIBILE DI LINEA | LINE FUSE |
| IB | INTERRUTTORE LINEA BRUCIATORE | BURNER LINE SWITCH |
| IG | INTERRUTTORE GENERALE | MAINS SWITCH |
| IL | INTERRUTTORE LINEA AUSILIARI | AUXILIARY LINE SWITCH |
| KM1 | CONTATTORE MOTORE VENTILATORE | FAN MOTOR CONTACTOR |
| LAF | LAMPADA SEGNALAZIONE ALTA FIAMMA BRUCIATORE | BURNER IN HIGH FLAME INDICATOR LIGHT |
| LB | LAMPADA SEGNALAZIONE BLOCCO BRUCIATORE | INDICATOR LIGHT FOR BURNER LOCK-OUT |
| LB1 | LAMPADA SEGNALAZIONE BLOCCO BRUCIATORE | INDICATOR LIGHT FOR BURNER LOCK-OUT |
| LBF | LAMPADA SEGNALAZIONE BASSA FIAMMA BRUCIATORE | BURNER IN LOW FLAME INDICATOR LIGHT |
| LEV1 | LAMPADA SEGNALAZIONE APERTURA [EV1] | INDICATOR LIGHT FOR OPENING OF ELECTRO-VALVE [EV1] |
| LEV2 | LAMPADA SEGNALAZIONE APERTURA [EV2] | INDICATOR LIGHT FOR OPENING OF ELECTRO-VALVE [EV2] |
| LF1 | LAMPADA SEGNALAZIONE FUNZIONAMENTO BRUCIATORE | INDICATOR LIGHT BURNER OPERATION |
| LPG | LAMPADA SEGNALAZIONE PRESENZA GAS IN RETE | INDICATOR LIGHT FOR PRESENCE OF GAS IN THE NETWORK |
| LSPG | LAMPADA SEGNALAZIONE BLOCCO CONTROLLO TENUTA VALVOLE | INDICATOR LIGHT FOR LEAKAGE OF VALVES |
| LSPG1 | LAMPADA SEGNALAZIONE BLOCCO CONTROLLO TENUTA VALVOLE | INDICATOR LIGHT FOR LEAKAGE OF VALVES |
| LT | LAMPADA SEGNALAZIONE BLOCCO TERMICO | INDICATOR LIGHT FOR MOTOR OVERLOAD THERMAL CUTOUT |
| LTA | LAMPADA SEGNALAZIONE TRASFORMATORE DI ACCENSIONE | IGNITION TRANSFORMER INDICATOR LIGHT |
| MV | MOTORE VENTILATORE | FAN MOTOR |
| PA | PRESSOSTATO ARIA | AIR PRESSURE SWITCH |
| PGMAX | PRESSOSTATO GAS DI MASSIMA PRESSIONE | MAXIMUM PRESSURE GAS SWITCH |
| PGMIN | PRESSOSTATO GAS DI MINIMA PRESSIONE | MINIMUM GAS PRESSURE SWITCH |
| PS | PULSANTE SBLOCCO FIAMMA | FLAME UNLOCK BUTTON |
| PS1 | PULSANTE SBLOCCO FIAMMA | FLAME UNLOCK BUTTON |
| PT100 | SONDA DI TEMPERATURA | TEMPERATURE PROBE |
| SD-PRESS | SONDA DI PRESSIONE | PRESSURE PROBE |
| SD-TEMP. | SONDA DI TEMPERATURA | TEMPERATURE PROBE |
| SD - 0÷10V | TRASDUTTORE USCITA IN TENSIONE | TRANSDUCER VOLTAGE OUTPUT |
| SD - 4÷20mA | TRASDUTTORE USCITA IN CORRENTE | TRANSDUCER CURRENT OUTPUT |
| SIEMENS LME22.331 | APPARECCHIATURA CONTROLLO FIAMMA | CONTROL BOX |
| SIEMENS RWF40.0xx | REGOLATORE MODULANTE (ALTERNATIVO) | BURNER MODULATOR (ALTERNATIVE) |
| SIEMENS RWF50.2x | REGOLATORE MODULANTE | BURNER MODULATOR |
| SIEMENS SQN30.1(2)51 | SERVOCOMANDO SERRANDA ARIA (ALTERNATIVO) | AIR DAMPER ACTUATOR (ALTERNATIVE) |
| SIEMENS SQN72.2A4A20 | SERVOCOMANDO SERRANDA ARIA (ALTERNATIVO) | AIR DAMPER ACTUATOR (ALTERNATIVE) |
| SIEMENS SQN72.4A4A20 | SERVOCOMANDO SERRANDA ARIA (ALTERNATIVO) | AIR DAMPER ACTUATOR (ALTERNATIVE) |
| SMA | SELETTORE MANUALE/AUTOMATICO | MANUAL/AUTOMATIC SWITCH |
| SMF | SELETTORE MANUALE FUNZIONAMENTO MIN-0-MAX | MIN-0-MAX MANUAL OPERATION SWITCH |
| ST | SERIE TERMOSTATI/PRESSOSTATI | SERIES OF THERMOSTATS OR PRESSURE SWITCHES |
| ST | SERIE TERMOSTATI/PRESSOSTATI | SERIES OF THERMOSTATS OR PRESSURE SWITCHES |
| TA | TRASFORMATORE DI ACCENSIONE | IGNITION TRANSFORMER |
| TAB | TERMOSTATO/PRESSOSTATO ALTA-BASSA FIAMMA | HIGH-LOW THERMOSTAT/PRESSURE SWITCHES |
| TC | TERMOCOPPIA | THERMOCOUPLE |
| TS | TERMOSTATO/PRESSOSTATO DI SICUREZZA | SAFETY THERMOSTAT OR PRESSURE SWITCH |
| TV | TERMICO MOTORE VENTILATORE | FAN MOTOR THERMAL |
| VPS50x | CONTROLLO DI TENUTA VALVOLE GAS (OPTIONAL) | GAS PROVING SYSTEM (OPTIONAL) |
| microA | MICROAMPEROMETRO | MICROAMMETER |

| | | | |
|---|---|---|---|
| Data | 18/01/2012 | PREC. | FOGLIO |
| Revisione | 02 | 3 | 4 |
| Dis. N. | 18 - 236 | SEGUE | TOTALE |
| | | / | 4 |

# APPENDIX

## SIEMENS LME11/21/22 CONTROL BOX

The series of equipment LME.. is used for the starup and supervisione of 1- or 2- stage gas burners. The series LME.. is interchangeable with the series LGB.. and LMG.., all diagrams and accessories are interchangeable.

**Comparative table**

| LGB Series | LMG Series | LME Series |
|---|---|---|
| --- | LMG 25.33 | LME 11.33 |
| LGB 21.33 | LMG 21.33 | LME 21.33 |
| LGB 22.33 | LMG 22.33 | LME 22.33 |

### Preconditions for burner startup

- Burner control must be reset
- All contacts in the line are closed, request for heat
- No undervoltage
- Air pressure switch LP must be in its “no-load” position
- Fan motor or AGK25 is closed
- Flame detector is darkened and there is no extraneous light

### Undervoltage

Safety shutdown from the operating position takes place should mains voltage drop below about AC 175 V (at UN = AC 230 V)

Restart is initiated when mains voltage exceeds about AC 185 V (at UN = AC 230 V).

### Controlled intermittent operation

After no more than 24 hours of continuous operation, the burner control will initiate automatic controlled shutdown followed by a restart.

### Reversed polarity protection with ionization

If the connections of live conductor (terminal 12) and neutral conductor (terminal 2) aremixed up, the burner control will initiate lockout at the end of the safety time “TSA”.

### Control sequence in the event of fault

If lockout occurs, the outputs for the fuel valves, the burner motor and the ignition equipment will immediately be deactivated (< 1 second).

### Operational status indication

In normal operation, the different operating states are showed by means of the multicolor LED, inside the lockout reset button:

| | |
|---|---|
| LED **red LED** **yellow LED** **green LED** | ..... Steady on<br>❍... Off |

During startup, status indication takes place according to the table:

| Status | Color code | Color |
|---|---|---|
| Waiting time tw, other waiting states | ❍..... | Off |
| Ignition phase, ignition controlled | ● ❍ ● ❍ ● ❍ ● ❍ ● ❍ ● | Flashing yellow |
| Operation, flame ok | □..... | Green |
| Operation, flame not ok | □ ❍ □ ❍ □ ❍ □ ❍ □ ❍ | Flashing green |
| Extraneous light on burner startup | □ ▲ □ ▲ □ ▲ □ ▲ □ ▲ | Green - red |
| Undervoltage | ● ▲ ● ▲ ● ▲ ● ▲ ● ▲ | Yellow - red |
| Fault, alarm | ▲..... | Red |
| Error code output (refer to “Error code table”) | ▲❍ ▲❍ ▲❍ ▲❍ | Flashing red |

### START-UP PROGRAM

As far as the startup program, see its time diagram:

**A Start command (switching on)**

This command is triggered by control thermostat / pressure controller «R». Terminal 12 receives voltage and the programming mechanism starts running. On completion of waiting time «tw» with the LME21..., or after air damper «SA» has reached the nominal load position (on completion of «t11») with the LME22..., fan motor «M» will be started.

**tw Waiting time**

During the waiting time, air pressure monitor «LP» and flame relay «FR» are tested for correct contact positions.

**t11 Programmed opening time for actuator «SA»**

(Only with LME22...) The air damper opens until the nominal load position is reached. Only then will fan motor «M» be switched on.

**t10 Specified time for air pressure signal**

On completion of this period of time, the set air pressure must have built up, or else lockout will occur.

**t1 Prepurge time**

Purging the combustion chamber and the secondary heating surfaces: required with low-fire air volumes when using the LME21... and with nominal load air volumes when using the LME22.... The diagrams show the so-called prepurge time «t1» during which air pressure monitor «LP» must indicate that the required air pressure is available. The effective prepurge time «t1» comprises interval end «tw» through «t3».

**t12 Programmed closing time for actuator «SA»**

(Only with LME22...)During «t12», the air damper travels to the low-fire position.

**t3 Preignition time**

During «t3» and up to the end of «TSA», flame relay «FR» is forced to close. On completion of «t3», the release of fuel is triggered at terminal 4.

**TSA Ignition safety time**

On completion of «TSA», a flame signal must be present at terminal 1. That flame signal must be continuously available until shutdown occurs, or else flame relay «FR» will be deenergized, resulting in lockout.

**t4 Interval BV1 and BV2-LR**

Time between the end of TSA and the signal to the second fuel valve BV2 or to the load controller LR

**B - B'** Interval for flame establishment

**C** Burner operation position

**C - D** Burner operation (heat production)

**D** Controlled by "R" shutdown

The burner stops and the control device is ready for a new startup.

**LME11 control sequence**

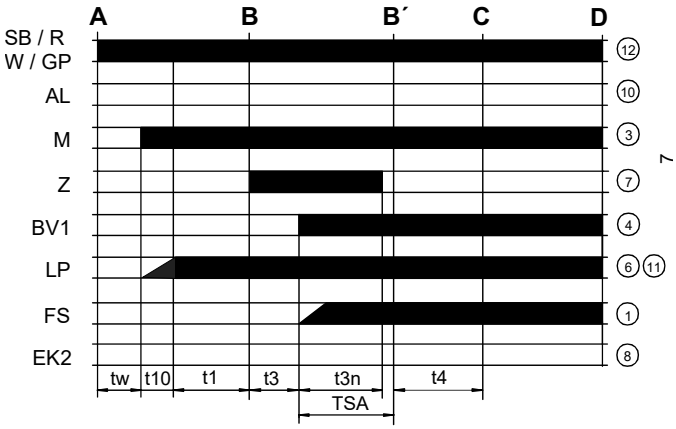


**LME21 control sequence**

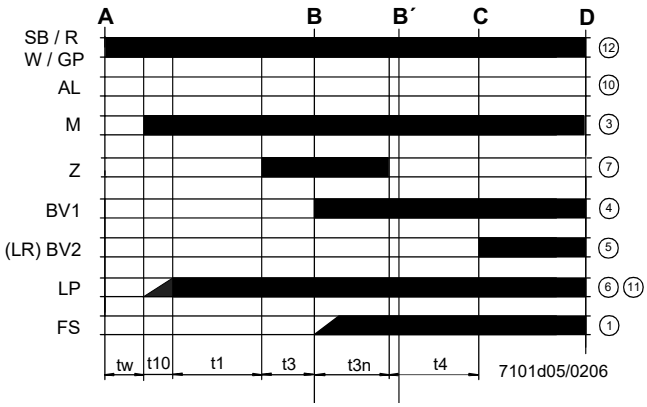


**LME22 control sequence**

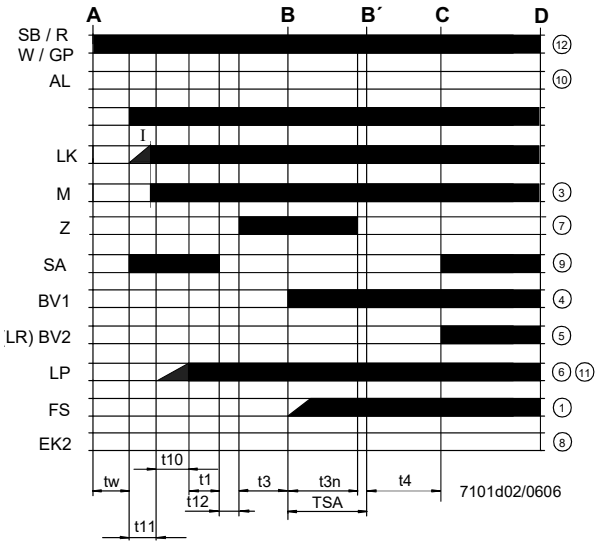


**Control sequence**

| | |
|---|---|
| tw | Waiting time |
| t1 | Purge time |
| TSA | Ignition safety time |
| t3 | Preignition time |
| t3n | Postignition time |
| t4 | Interval between BV1 and BV2/LR |
| t10 | Specified time for air pressure signal |
| t11 | Programmed opening time for actuator SA |
| t12 | Programmed closing time for actuator SA |

## LME11 connection diagram

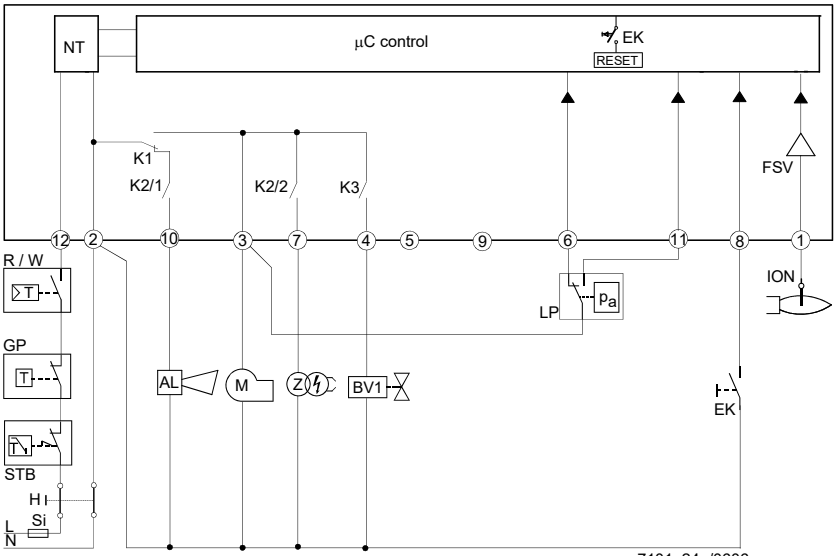


## LME21 connection diagram

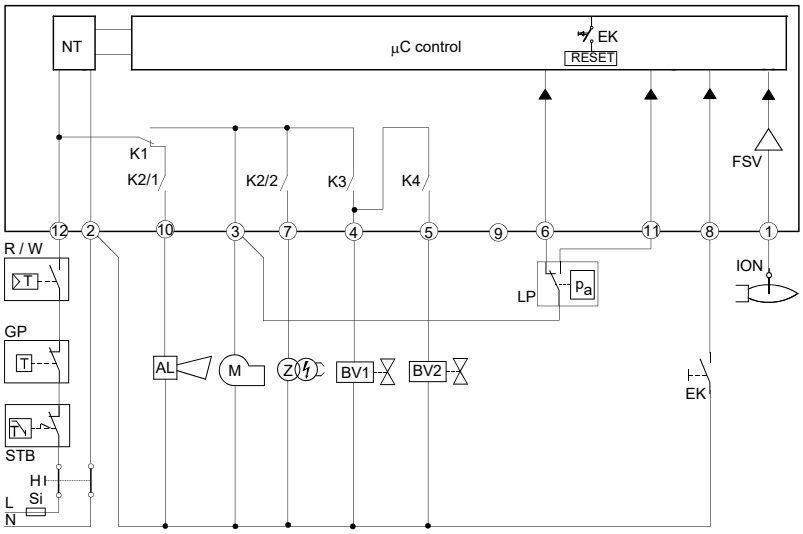


## LME22 connection diagram

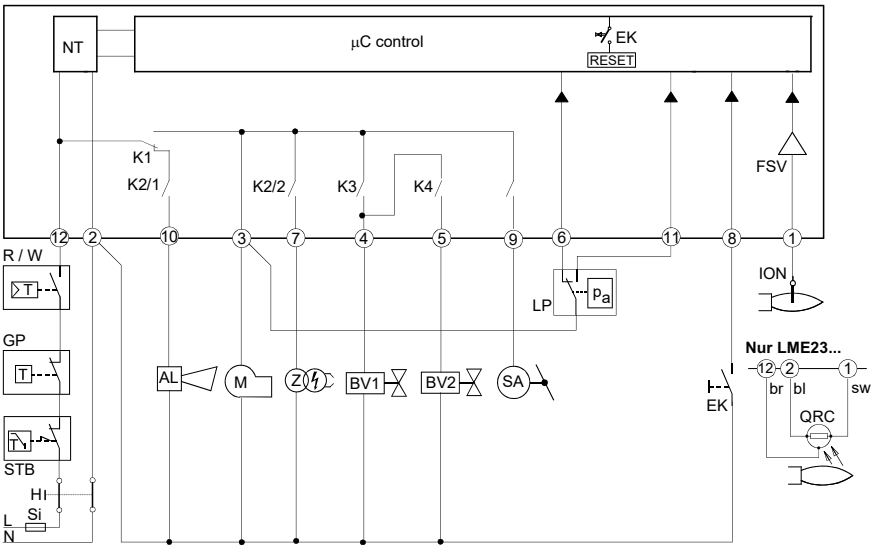


## Connection diagram

| | |
|---|---|
| AL | Error message (alarm) |
| BV | Fuel valve |
| EK2 | Remote lockout reset button |
| FS | Flame signal |
| GP | Gas pressure switch |
| LP | Air pressure switch |
| LR | Load controller |
| M | Fan motor |
| R | Control thermostat/pressurestat |
| SB | Safety limit thermostat |
| W | Limit thermostat /pressure switch |
| Z | Ignition transformer |

## CONTROL PROGRAM IN THE EVENT OF FAULT

- If a fault occurs, all outputs will immediately be deactivated (in less than 1s).
- After an interruption of power, a restart will be made with the full program sequence.
- If the operating voltage drops below the undervoltage thresold, a safety shutdown is performed.
- If the operating voltage exceeds the undervoltage thresold, a restart will be performed.
- In case of extraneous light during “t1”, a lockout occurs.
- In case of extraneous light during “tw”, there is a prevention of startup and a lockout after 30 seconds.
- In case of no flame at the end of TSA, there will be max. 3 repetitions of the startup cycle, followed by a lockout at the end of TSA, for mod. LME11..; directly a lockout at the end of TSA for LME21-22 models.
- For LME11 model: if a loss of flame occurs during operation, in case of an establishment of flame at the end of TSA, there will be max. 3 repetitions, otherwise a lockout will occur.
- For LME21-22 models: if a loss of flame occurs during operation, there will be a lockout.
- If the contact of air pressure monitor LP is in working position, a prevention of startup and lockout after 65 seconds will occur.
- IIf the contact of air pressure monitor LP is in normal position, a lockout occurs at the end of t10.
- If no air pressure signal is present after completion of t1, a lockout will occur.

## CONTROL BOX LOCKED

In the event of lockout, the LME.. remains locked and the red signal lamp (LED) will light up.The burner control can immediately be reset. This state is also mantained in the case fo mains failure.

## DIAGNOSITICS OF THE CASUE OF FAULT

- Press the lockout reset button for more than 3 seconds to activate the visual diagnostics.
- Count the number of blinks of the red signsl lamp and check the fault condition on the “Error code table” (the device repeats the blinks for regular intervals).

During diagnostics, the control outputs are deactivated:

- the burner remains shut down;
- external fault indication is deactivated;
- fault status is showed by the red LED, inside the LME’s lockout reset buttonaccording to the “Error code table”:

| ERROR CODE TABLE | |
|---|---|
| **2 blinks **** | **No establishment of flame at the end of TSA**<br>- Faulty or soiled fuel valves<br>- Faulty or soiled flame detector<br>- Inadequate adjustement of burner, no fuel<br>- Faulty ignition equipment |
| **3 blinks ***** | **The air pressure switch does not switch or remains in idle position:**<br>- LP is faulty<br>- Loss of air pressure signal after t10<br>- LPis welded in normal position. |
| **4 blinks ****** | - Extraneous light when burner starts up. |
| **5 blinks ******* | - LP is working position. |
| **6 blinks ******* | Free. |
| **7 blinks ********* | **Loss of flame during operation**<br>- Faulty or soiled fuel valves<br>- Faulty or soiled flame detector<br>- Inadequate adjustement of burner |
| **8 ÷ 9 blinks** | Free |
| **10 blinks ************ | **Faulty output contacts**<br>***Attention: “lockout” remote signal (terminal no. 10) not enabled***<br>- Wiring error<br>- Anomalous voltage on ouput terminals<br>- Other faults |
| **14 blinks ************** (only for LME4x)** | - CPI contact (gas valve microswitch) not closed. |

## RESETTING THE BURNER CONTROL

When lockout occurs, the burner control can immediately be reset, by pressing the lockout reset button for about 1..3 seconds. The LME.. can only be reset when all contacts in the line are closed and when there is no undervoltage.

## LIMITATION OF REPETITIONS (only for LME11.. model)

If no flame is established at the end of TSA, or if the flame is lost during operation, a maximum of 3 repetitions per controller startup can be performed via “R”, otherwise lockout will be initiated. Counting of repetitions is restarted each time a controlled startup via “R” takes place.

⚠ **Condensation, formation of ice and ingress of water are not permitted!**

## TECHNICAL CHARACTERISTICS

| | |
|---|---|
| Mains voltage | 120V AC +10% / -15%<br>230V AC +10% / -15% |
| Frequency | 50 ... 60 Hz +/- 6% |
| Power consumption | 12VA |
| External primary fuse | max. 10 A (slow) |
| input current at terminal 12 | max. 5 A |
| Detection cable length | max. 3m (for electrode) |
| Detection cable length | max. 20 m (laid separately, for QRA probe) |
| Reset cable length | max. 20 m (posato separatamente) |
| Term. 8 & 10 cable length | max. 20 m |
| Thermostat cable length and other terminals | max. 3 m |
| Safety class | I |
| Index of protection | IP40 (to be ensured during mounting) |
| Operating conditions | -20... +60 °C, < 95% UR |
| Storage conditions | -20... +60 °C, < 95% UR |
| Weight | approx. 160 g |

C.I.B. UNIGAS S.p.A.
Via L.Galvani, 9 - 35011 Campodarsego (PD) - ITALY
Tel. +39 049 9200944 - Fax +39 049 9200945/9201269
web site: www.cibunigas.it - e-mail: cibunigas@cibunigas.it

Note: Specifications and data subject to change. Errors and omissions excepted.

# CIB UNIGAS 600V

CONTROLLER

## USER'S MANUAL

COD. M12925CA Rel 1.2 08/2014

SOFTWARE VERSION **1.0x T73**
code **80379** / Edition **01 - 06/2012**

## 1 • INSTALLATION

### • Dimensions and cut-out; panel mounting

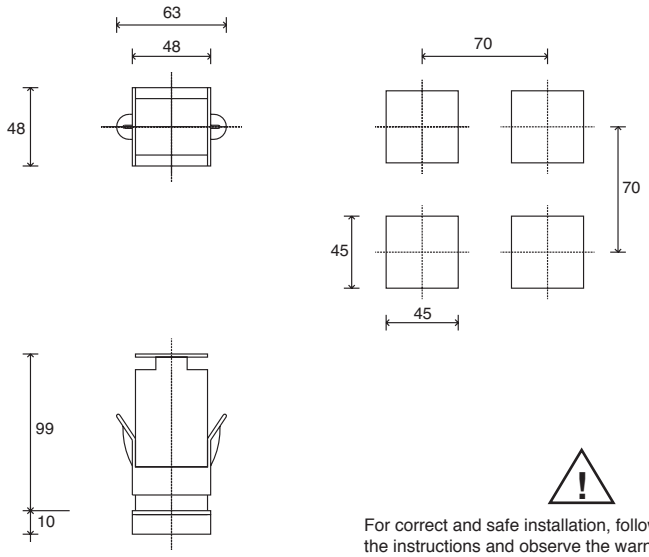


For correct and safe installation, follow the instructions and observe the warnings contained in this manual.

***Panel mounting:***
To fix the unit, insert the brackets provided into the seats on either side of the case.
To mount two or more units side by side, respect the cut-out dimensions shown in the drawing.

***CE MARKING:*** The instrument conforms to the European Directives 2004/108/CE and 2006/95/CE with reference to the generic standards: **EN 61000-6-2** (immunity in industrial environment) **EN 61000-6-3** (emission in residential environment) **EN 61010-1** (safety).
***MAINTENANCE:*** Repairs must be done only by trained and specialized personnel.
Cut power to the device before accessing internal parts.
Do not clean the case with hydrocarbon-based solvents (Petrol, Trichlorethylene, etc.). Use of these solvents can reduce the mechanical reliability of the device. Use a cloth dampened in ethyl alcohol or water to clean the external plastic case.
***SERVICE:*** GEFRAN has a service department. The warranty excludes defects caused by any use not conforming to these instructions.

EMC conformity has been tested with the following connections

| FUNCTION | CABLE TYPE | LENGTH |
|---|---|---|
| Power supply cable | 1 mm² | 1 m |
| Relay output cable | 1 mm² | 3,5 m |
| TC input | 0,8 mm² compensated | 5 m |
| Pt100 input | 1 mm² | 3 m |

## 2 • TECHNICAL SPECIFICATIONS

| | |
|---|---|
| *Display* | 2x4 digit green, high display 10 and 7mm |
| *Keys* | 4 of mechanical type (Man/Aut, INC, DEC, F) |
| *Accuracy* | 0.2% f.s. ±1 digit ambient temperature 25°C |
| *Main input (settable digital filter)* | TC, RTD, PTC, NTC<br>60mV,1V Ri≥1MΩ; 5V,10V Ri≥10KΩ; 20mA Ri=50Ω<br>Tempo di campionamento 120 msec. |
| *Type TC Thermocouples* (ITS90) | Type TC Thermocouples : J,K,R,S,T (IEC 584-1, CEI EN 60584-1, 60584-2) ; custom linearization is available / types B,E,N,L GOST,U,G,D,C are available by using the custom linearization. |
| *Cold junction error* | 0,1° / °C |
| *RTD type (scale configurable within indicated range, with or without decimal point)* (ITS90)<br>*Max line resistance for RTD* | DIN 43760 (Pt100), JPT100<br>20Ω |
| *PTC type / NTC Type* | 990Ω, 25°C / 1KΩ, 25°C |
| *Safety* | detection of short-circuit or opening of probes, LBA alarm |
| *°C / °F selection* | configurable from faceplate |
| *Linear scale ranges* | -1999 to 9999 with configurable decimal point position |
| *Controls* | PID, Self-tuning, on-off |
| *pb - dt - it* | 0,0...999,9 % - 0,00...99,99 min - 0,00...99,99 min |
| *Action* | Heat / Cool |
| *Control outputs* | on / off |
| *Maximum power limit heat / cool* | 0,0...100,0 % |
| *Cycle time* | 0...200 sec |
| *Main output type* | relay, logic, continuous (0...10V Rload ≥ 250KΩ, 0/4...20mA Rload ≤ 500Ω) |
| *Softstart* | 0,0...500,0 min |
| *Fault power setting* | -100,0...100,0 % |
| *Automatic blanking* | Displays PV value, optional exclusion |
| *Configurable alarms* | Up to 3 alarm functions assignable to an output, configurable as: maximum, minimum, symmetrical, absolute/deviation, LBA |
| *Alarm masking* | - exclusion during warm up<br>- latching reset from faceplate or external contact |
| *Type of relay contact* | NO (NC), 5A, 250V/30Vdc cosφ=1 |
| *Logic output for static relays* | 24V ±10% (10V min at 20mA) |
| *Transmitter power supply* | 15/24Vdc, max 30mA short-circuit protection |
| *Power supply (switching type)* | (std) 100 ... 240Vac ±10%<br>(opt.) 11...27Vac/dc ±10%;<br>50/60Hz, 8VA max |
| *Faceplate protection* | IP65 |
| *Working / Storage temperature range* | 0...50°C / -20...70°C |
| *Relative humidity* | 20 ... 85% non-condensing |
| *Environmental conditions of use* | for internal use only, altitude up to 2000m |
| *Installation* | Panel, plug-in from front |
| *Weight* | 160g for the complete version |

# 3 • DESCRIPTION OF FACEPLATE

*Function indicators*
Indicates modes of operation

L1 MAN/AUTO = OFF (automatic control)
ON (manual control)

L2 PRE-HEATING = ON (running)

L3 SELFTUNING = ON (enabled Self)
OFF (disabled Self)

*Automatic/Manual adjustment selection*
Active only when PV display visualises the process variable (button pressed for at least 5 sec.)

*Indication of output states*
OUT 1 (AL1); OUT 2 (OPEN); OUT 3 (CLOSED)

*PV Display*: Indication of process variable
Error Indication: LO, HI, Sbr, Err
***LO***= the value of process variable is < di LO_S
***HI***= the value of process variable is > di HI_S
***Sbr***= faulty sensor or input values higher than max. limits
***Err***= PT100 third wire opened for PT100, PTC or input values lower than min. limits (i.e.: TC wrong connection)

*SV display*: Indication of setpoint

*Function key*
Gives access to the various configuration phases •• Confirms change of set parameters and browses next or previous parameter (if Auto/Man key is pressed)

*"Inc" and "Dec" key*
Press to increment (decrement) any numerical parameter •• Increment (decrement) speed is proportional to time key stays pressed •• The operation is not cyclic: once the maximum (minimum) value of a field is reached, the value will not change even if the key remains pressed.

# 4 • CONNECTIONS

## • Outputs

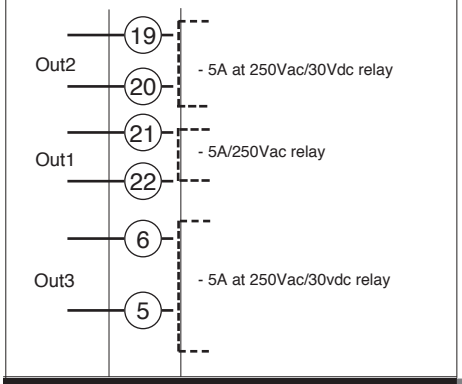


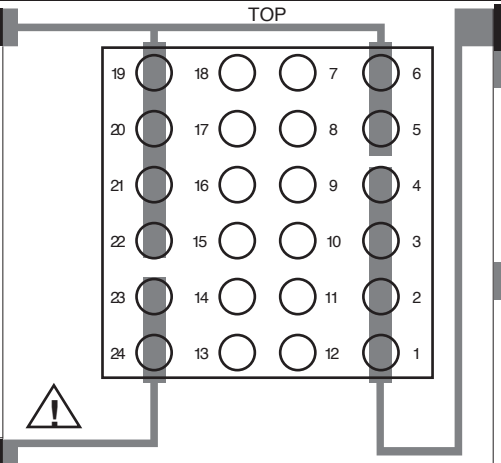


## • Power Supply

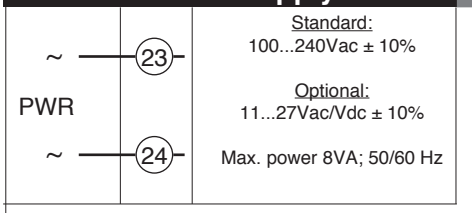


## • Inputs

### • TC Input

Available thermocouples:
J, K, R, S, T
(B, E, N, L, U, G, D, C custom linearization is available)
- Observe polarities
- For extensions, use the correct compensating cable for the type of TC used

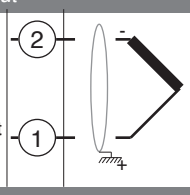


### • Linear input with 3-wire transmitter

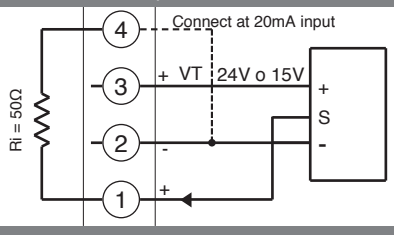


### • Linear input (I)

Linear input in dc current
20mA, Ri = 50Ω

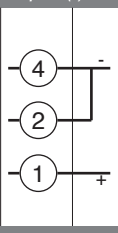


### • Input 1 linear with transmitter 2 wires

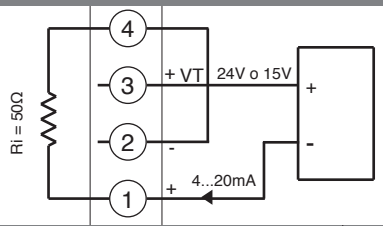


### • Linear input (V)

Linear input in dc voltage
60mV, 1V
Ri > 1MΩ
5V, 10V
Ri > 10KΩ

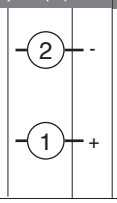


### • Pt100 / PTC / NTC

Use wires of adequate diameter (min. 1mm²)
PT100, JPT100, PTC, NTC

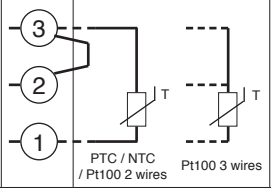


### • Identification of boards

Power board - Solder side

Select transmitter voltage

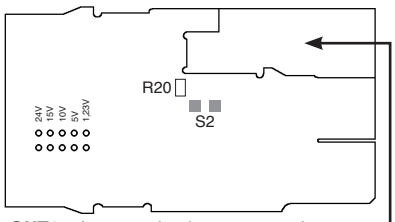


**N.B**. : you can keep the **OUT1** relay energized at power-up by inserting jumper **S2** and removing resistance **R20**.

CPU board - Component side

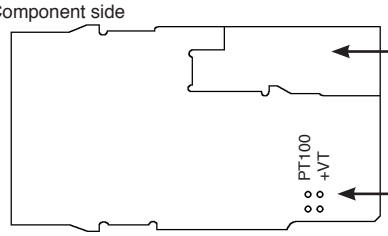


IN/OUT boards
(see appendix)

Select signal at contact 3

### • Device structure

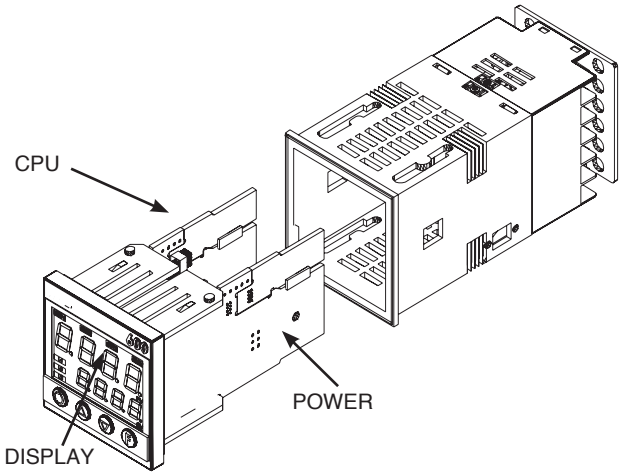

# 5 • "EASY" PROGRAMMING and CONFIGURATION

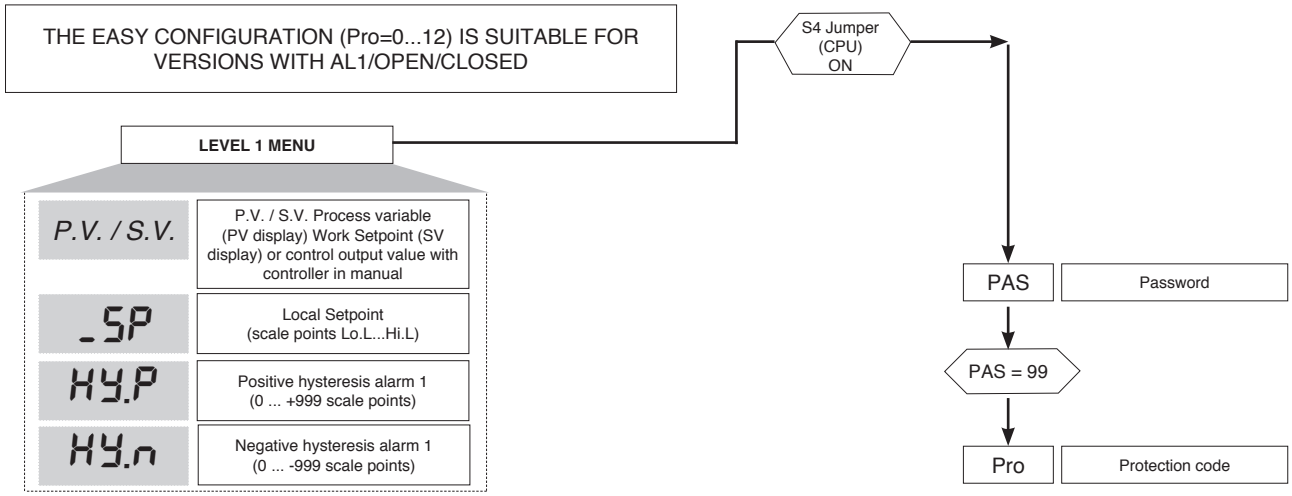


## • Prot

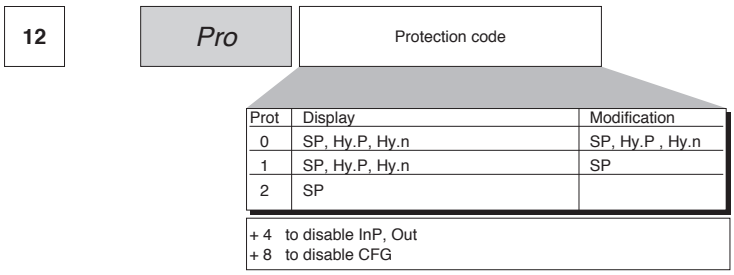


| Prot | Display | Modification |
|---|---|---|
| 0 | SP, Hy.P, Hy.n | SP, Hy.P , Hy.n |
| 1 | SP, Hy.P, Hy.n | SP |
| 2 | SP | |

# 6 • PROGRAMMING and CONFIGURATION

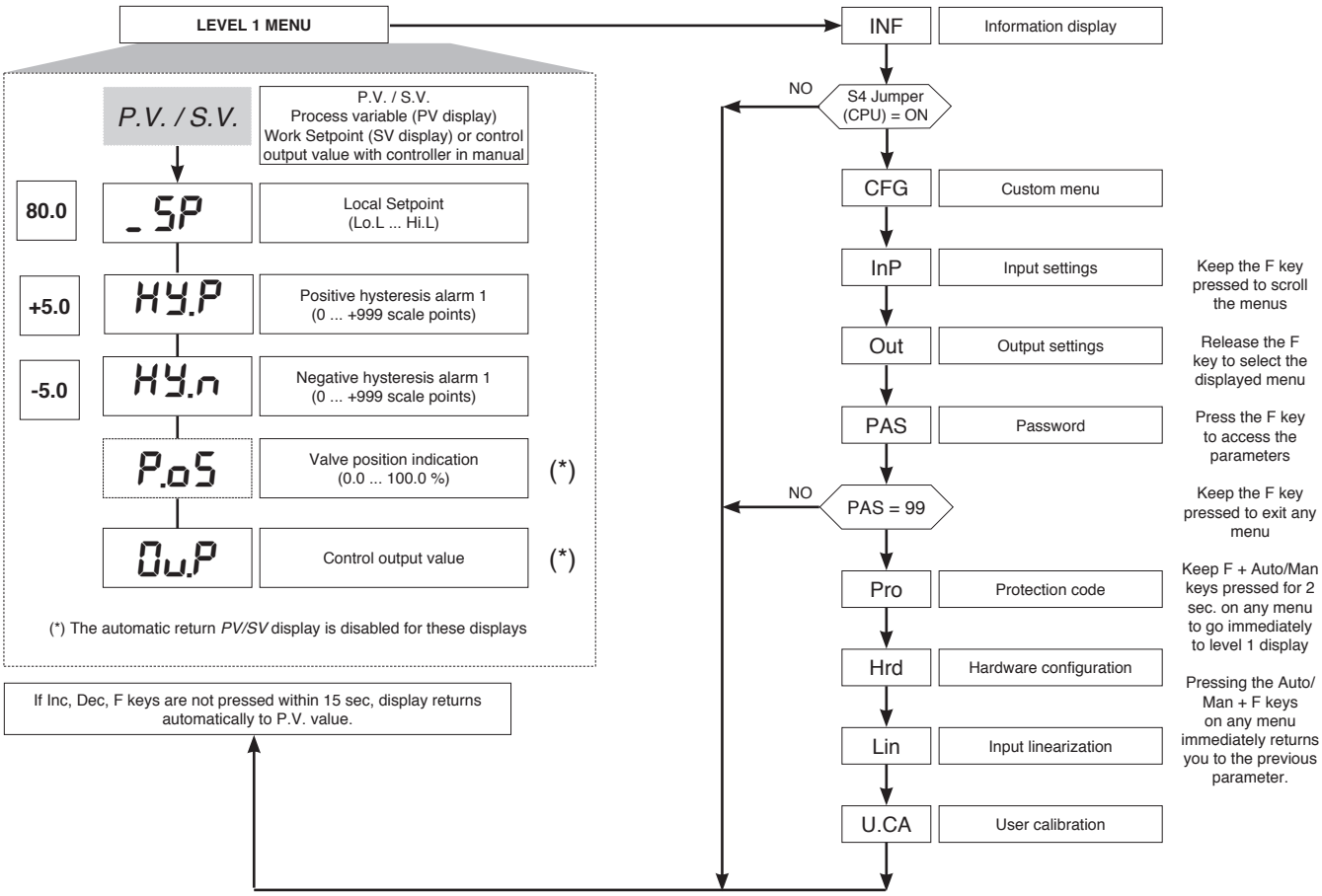


**N.B.: Once a particular configuration is entered, all unnecessary parameters are no longer displayed**

## • InFo Display

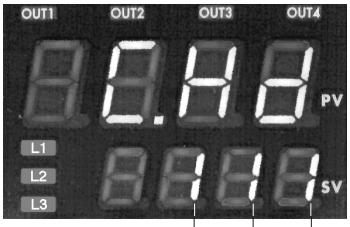


| OUTPUT 2 |
|---|
| 0 = None |
| 1 = Relay |

| OUTPUT 3 |
|---|
| 0 = None |
| 1 = Relay |

| SERIAL COMMUNICATION |
|---|
| 0 = None |

| | | |
|---|---|---|
| | INF | Information display |
| | UPd | Software version |
| | Err | Self diagnostic error code |
| 110 | C.Hd | Configuration hrd |

| | |
|---|---|
| 0 | No Error |
| 1 | Lo |
| 2 | Hi |
| 3 | ERR |
| 4 | SBR |

+8 error OUT2 card recognition
+16 error OUT3 card recognition

## • CFG

| | | |
|---|---|---|
| | CFG | Control parameters |
| 0 | S.tu | Enabling self-tuning, autotuning, softstart |
| 1.2 | h.Pb | Proportional band for heating or hysteresis in regulation ON/OFF — 0 ... 999.9% f.s. |
| 5.83 | h. It | Integral time for heating — 0.00 ... 99.99 min |
| 1.33 | h.dt | Derivative time for heating — 0.00 ... 99.99 min |
| 100.0 | h.P.H | Maximum power limit for heating — 0.0 ... 100.0% |
| 0.0 | h.P.L | Minimum power limit for heating (not available for double heat/ cool action) — 0.0 ... 100.0% |

| S.tun | Continuous autotuning | Sel-ftuning | Softstart |
|---|---|---|---|
| 0 | NO | NO | NO |
| 1 | YES | NO | NO |
| 2 | NO | YES | NO |
| 3 | YES | YES | NO |
| 4 | NO | NO | YES |
| 5 | YES | NO | YES |
| 6 | - | - | - |
| 7 | - | - | - |

| S.tun | Autotuning one shot | Selftuning | Softstart |
|---|---|---|---|
| 8* | WAIT | NO | NO |
| 9 | GO | NO | NO |
| 10* | WAIT | YES | NO |
| 11 | GO | YES | NO |
| 12* | WAIT | NO | YES |
| 13 | GO | NO | YES |

(*) +16 with passage automatic rifle in GO if PV-SP > 0,5%
+32 with passage automatic rifle in GO if PV-SP > 1%
+64 with passage automatic rifle in GO if PV-SP > 2%
+128 with passage automatic rifle in GO if PV-SP > 4%

| | | | |
|---|---|---|---|
| 0 | r.St | Manual reset | -999 ... 999 punti scala |
| 0.0 | P.r.S | Reset power | -100.0 ... 100.0% |
| 0 | A.r.S | Antireset | 0 ... 9999 scale points |
| 0.0 | FFd | Feedforward | -100.0 ... 100.0% |
| 0.0 | SoF | Softstart time | 0.0 ... 500.0 min |
| 0.0 | L.b.t | Waiting time for LBA alarm intervention (Set to "0" to disable LBA alarm) | 0.0 ... 500.0 min (*) |
| 0.0 | L.b.P | Power limit for LBA alarm condition | -100.0 ... 100.0% (*) |
| 0.0 | FA.P | Power output in fault condition (when probe is faulty) | -100.0 ... 100.0% ON / OFF |
| 0.0 | G.SP | Set gradient (see applicable note) | 0.0...999.9 digit/min. (digit / sec see SP.r) |
| 0.0 | G.S0 | Setpoint gradient of pre-heating | 0.0 ... 999.9 digit / min. (digit / sec seeSP.r) |
| 0 | Ht.0 | Retention time of pre-heating setpoint | 0 … 200 min. (sec see SP.r) |
| 0.0 | SP.0 | Setpoint of pre-heating | Lo.L … Hi.L |
| 0.0 | G.S 1 | Set gradient at the end of the pre-heating | 0.0 ... 999.9 digit / min. (digit / sec see SP.r) |

(*) LBA alarm may be reset by simultaneously pressing Δ + ∇ keys when OutP is displayed or by switching to Manual.

## • InP

**InP** — Input settings

**0** — SP.r — Def. remote setpoint — 0 default (remote setpoint present)

+2 Times of pre-heating and gradients of set digit/sec

**30** — tYP. — Probe type, signal, enable custom linearization, and main input scale

| Type | Probe type | without decimal point | with decimal point |
|---|---|---|---|
| | Sensore: | TC | |
| 0 | TC J °C | 0/1000 | 0.0/999.9 |
| 1 | TC J °F | 32/1832 | 32.0/999.9 |
| 2 | TC K °C | 0/1300 | 0.0/999.9 |
| 3 | TC K °F | 32/2372 | 32.0/999.9 |
| 4 | TC R °C | 0/1750 | 0.0/999.9 |
| 5 | TC R °F | 32/3182 | 32.0/999.9 |
| 6 | TC S °C | 0/1750 | 0.0/999.9 |
| 7 | TC S ° F | 32/3182 | 32.0/999.9 |
| 8 | TC T °C | -200/400 | -199.9/400.0 |
| 9 | TC T °F | -328/752 | -199.9/752.0 |
| 28 | TC | CUSTOM | CUSTOM |
| 29 | TC | CUSTOM | CUSTOM |
| 30 | PT100 °C | -200/850 | -199.9/850.0 |
| 31 | PT100 °F | -328/156 2 | -199.9/999.9 |
| 32 | JPT100 °C | -200/600 | -199.9/600.0 |
| 33 | JPT100 °F | -328/1112 | -199.9/999.9 |
| 34 | PTC °C | -55/120 | -55.0/120.0 |
| 35 | PTC °F | -67/248 | -67.0/248.0 |
| 36 | NTC °C | -10/70 | -10.0/70.0 |
| 37 | NTC °F | 14/158 | 14.0/158.0 |
| 38 | 0...60 mV | -1999/9999 | -199.9/999.9 |
| 39 | 0...60 mV | Custom scale | Custom scale |
| 40 | 12...60 mV | -1999/9999 | -199.9/999.9 |
| 41 | 12...60 mV | Custom scale | Custom scale |
| 42 | 0...20 mA | -1999/9999 | -199.9/999.9 |
| 43 | 0...20 mA | Custom scale | Custom scale |
| 44 | 4...20 mA | -1999/9999 | -199.9/999.9 |
| 45 | 4...20 mA | Custom scale | Custom scale |
| 46 | 0...10 V | -1999/9999 | -199.9/999.9 |
| 47 | 0...10 V | Custom scale | Custom scale |
| 48 | 2...10 V | -1999/9999 | -199.9/999.9 |
| 49 | 2...10 V | Custom scale | Custom scale |
| 50 | 0...5 V | -1999/9999 | -199.9/999.9 |
| 51 | 0...5 V | Custom scale | Custom scale |
| 52 | 1...5 V | -1999/9999 | -199.9/999.9 |
| 53 | 1...5 V | Custom scale | Custom scale |
| 54 | 0...1 V | -1999/9999 | -199.9/999.9 |
| 55 | 0...1 V | Custom scale | Custom scale |
| 56 | 200mv..1V | -1999/9999 | -199.9/999.9 |
| 57 | 200mv..1V | Custom scale | Custom scale |
| 58 | Cust10 V-20mA | -1999/9999 | -199.9/999.9 |
| 59 | Cust10 V-20mA | Custom scale | Custom scale |
| 60 | Cust 60mV | -1999/9999 | -199.9/999.9 |
| 61 | Cust 60mV | Custom scale | Custom scale |
| 62 | PT100-JPT | CUSTOM | CUSTOM |
| 63 | PTC | CUSTOM | CUSTOM |
| 64 | NTC | CUSTOM | CUSTOM |

For custom linearization:
- LO signal is generated with variable below Lo.S or at minimum calibration value
- HI signal is generated with variable above Lo.S or at maximum calibration value

Max. non-linearity error for thermocouples (TC), resistors (PT100) and thermistors (PTC, NTC).

The error is calculated as deviation from theoretical value and is expressed as percentage of full scale (in °C).

**S, R** range 0...1750°C; error < 0.2% f.s. (t > 300°C) / for other range; error < 0.5% f.s.
**T** error < 0.2% f.s. (t > -150°C)
**B** range 44...1800°C; error < 0.5% f.s. (t > 300°C) / range 44,0...999,9; error < 1% f.s. (t > 300°C)
**U** range -99,9...99,9 and -99...99°C; error < 0.5% f.s. / for other range; error < 0.2% f.s. (t > -150°C)
**G** error < 0.2% f.s. (t > 300°C)
**D** error < 0.2% f.s. (t > 200°C)
**C** range 0...2300; error < 0.2% f.s. / for other range; error < 0.5% f.s.

**NTC** error < 0.5% f.s.

Tc: **J, K, E, N, L** error < 0,2% f.s.
**JPT100** and **PTC** error < 0,2% f.s.
**PT100** scale -200...850°C
Precision better than 0,2% f.s. at 25°C
In range 0...50°C:
- Precision better than 0,2% f.s. in range -200...400°C
- Precision better than 0,4% f.s. in range +400...850°C

(where f.s. refers to range -200... +850°C)

**0.1** — FLt — Digital filter on input (if = 0 excludes averaging filter on sample value) — 0.0 ... 20.0 sec

**0.5** — FLd — Digital filter on input display — 0 ... 9.9 scale points

**1** — dP.S — Decimal point position for input scale

| dP_S | Format |
|---|---|
| 0 | xxxx |
| 1 | xxx.x |
| 2 | xx.xx (*) |
| 3 | x.xxx (*) |

(*) not available for TC, RTD, PTC and NTC scales

**0.0** — Lo.S — Minimum limit of main input scale — min...max input range selected in tyP

**850.0** — Hi.S — Maximum limit of main input scale — min...max input range selected in tyP

**0** — oFS. — Offset correction of main input — -999 ... 999 scale points

**30.0** — LoL — Lower limit for setting SP and absolute alarms — Lo.S ... Hi.S

**130.0** — HiL — Upper limit for setting SP and absolute alarms — Lo.S ... Hi.S

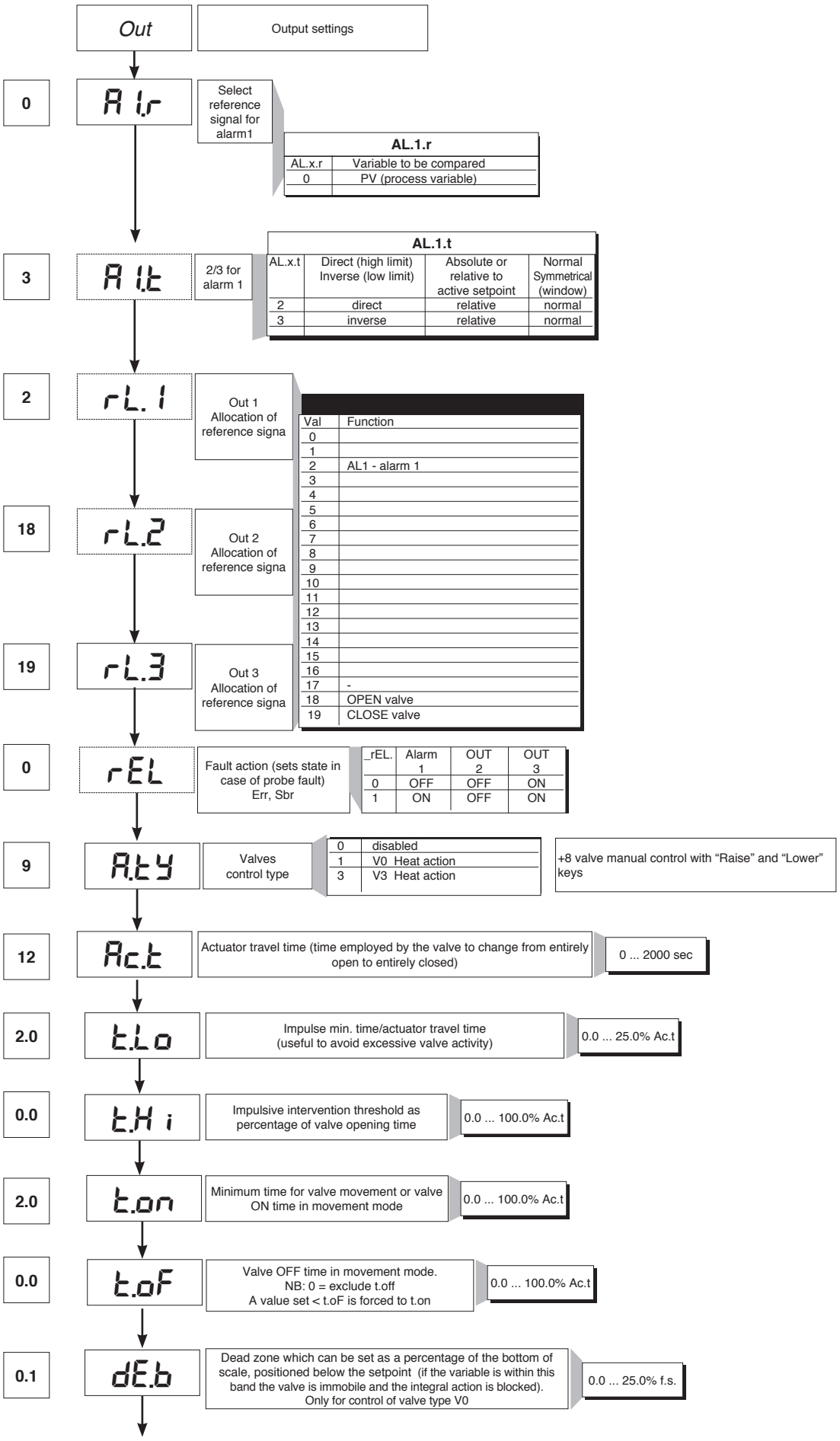
Out
Output settings
0
A1.r
Select reference signal for alarm1
AL.1.r
AL.x.r | Variable to be compared
0 | PV (process variable)
3
A1.t
2/3 for alarm 1
AL.1.t
AL.x.t | Direct (high limit) Inverse (low limit) | Absolute or relative to active setpoint | Normal Symmetrical (window)
2 | direct | relative | normal
3 | inverse | relative | normal
2
rL.1
Out 1 Allocation of reference signa
Val | Function
0
1
2 | AL1 - alarm 1
3
4
5
6
7
8
9
10
11
12
13
14
15
16
17 | -
18 | OPEN valve
19 | CLOSE valve
18
rL.2
Out 2 Allocation of reference signa
19
rL.3
Out 3 Allocation of reference signa
0
rEL
Fault action (sets state in case of probe fault) Err, Sbr
_rEL. | Alarm 1 | OUT 2 | OUT 3
0 | OFF | OFF | ON
1 | ON | OFF | ON
9
A.ty
Valves control type
0 | disabled
1 | V0 Heat action
3 | V3 Heat action
+8 valve manual control with “Raise” and “Lower” keys
12
Ac.t
Actuator travel time (time employed by the valve to change from entirely open to entirely closed)
0 ... 2000 sec
2.0
t.Lo
Impulse min. time/actuator travel time (useful to avoid excessive valve activity)
0.0 ... 25.0% Ac.t
0.0
t.Hi
Impulsive intervention threshold as percentage of valve opening time
0.0 ... 100.0% Ac.t
2.0
t.on
Minimum time for valve movement or valve ON time in movement mode
0.0 ... 100.0% Ac.t
0.0
t.oF
Valve OFF time in movement mode. NB: 0 = exclude t.off A value set < t.oF is forced to t.on
0.0 ... 100.0% Ac.t
0.1
dE.b
Dead zone which can be set as a percentage of the bottom of scale, positioned below the setpoint (if the variable is within this band the valve is immobile and the integral action is blocked). Only for control of valve type V0
0.0 ... 25.0% f.s.

## • Prot

12 — *Pro* — Protection code

| Prot | Display | Modification |
|---|---|---|
| 0 | SP, Hy.P, Hy.n, AL.2, AL.3, PoS, OuP, INF | SP, Hy.P , Hy.n, AL.2, AL.3, PoS |
| 1 | SP, Hy.P, Hy.n, AL.2, AL.3, PoS, OuP, INF | SP |
| 2 | SP, OuP, INF | |

+ 4 to disable InP, Out
+ 8 to disable CFG
+ 16 to disable SW “power-up - power down”
+ 32 disable manual power latching
+ 64 to disable manual power modification
+128 enables full configuration

Note: OuP and INF only display configuration extended

## • Hrd

*Hrd* — Hardware configuration

0 — hd.1 — Enable multiset instrument control by serial

6 — Ctr — Control type

| Val | Control type |
|---|---|
| 0 | P heat |
| 1 | |
| 2 | |
| 3 | PI heat |
| 4 | |
| 5 | |
| 6 | PID heat |
| 7 | |
| 8 | |
| 9 | ON-OFF heat |
| 10 | |
| 11 | |
| 12 | |
| 13 | |
| 14 | |

Selection of derivative action sampling time:
+ 0 sample 1 sec.
+ 16 sample 4 sec.
+ 32 sample 8 sec.
+ 64 sample 240 msec.

Note: LbA alarm is not enabled with ON/OFF type control

1 — AL.n — Select number of enabled alarms

| AL.nr | Alarme1 | Alarm 2 | Alarm 3 |
|---|---|---|---|
| 1 | enabled | disabled | disabled |

1 — but. — Function of M/A keys

| butt | |
|---|---|
| 0 | No function (key disenabled)) |
| 1 | MAN / AUTO controller |
| 2 | |
| 3 | HOLD |
| 4 | |
| 5 | |
| 6 | Start/Stop selftuning |
| 7 | Start/Stop autotuning |
| 8 | |

+ 16 disables the “back menu” function (Auto/Man + F keys) in the configuration menus

0 — dSP — Defining SV display function

| diSP | Lower display (SV) function |
|---|---|
| 0 | SSP - setpoint enabled |
| 1 | PoS - valve position |
| 2 | Control output value |
| 3 | Deviation (SSP - PV) |

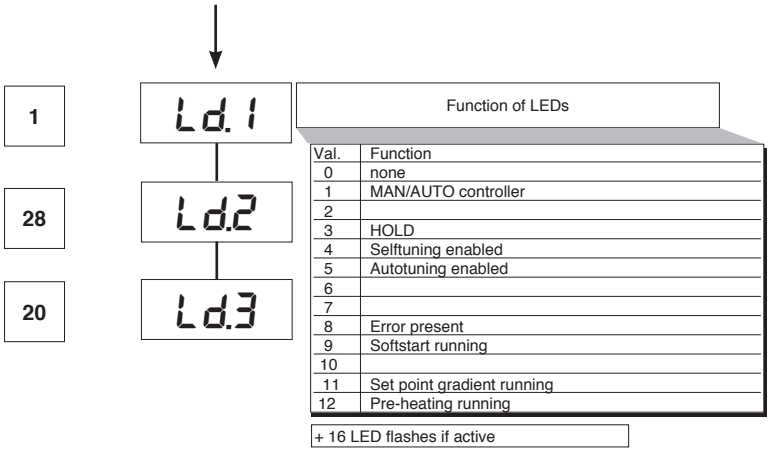


| Val. | Function |
|---|---|
| 0 | none |
| 1 | MAN/AUTO controller |
| 2 | |
| 3 | HOLD |
| 4 | Selftuning enabled |
| 5 | Autotuning enabled |
| 6 | |
| 7 | |
| 8 | Error present |
| 9 | Softstart running |
| 10 | |
| 11 | Set point gradient running |
| 12 | Pre-heating running |

## • Lin

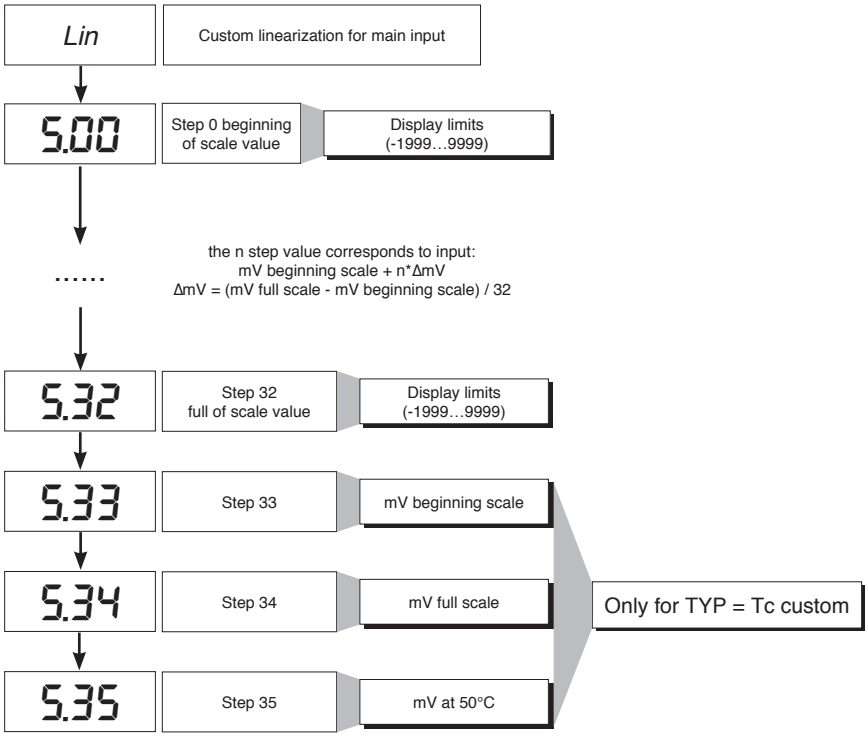


## • U.CAL

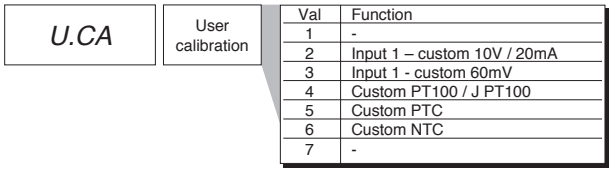


| Val | Function |
|---|---|
| 1 | - |
| 2 | Input 1 – custom 10V / 20mA |
| 3 | Input 1 - custom 60mV |
| 4 | Custom PT100 / J PT100 |
| 5 | Custom PTC |
| 6 | Custom NTC |
| 7 | - |

## 7 • CONSENT FOR BURNER AL1

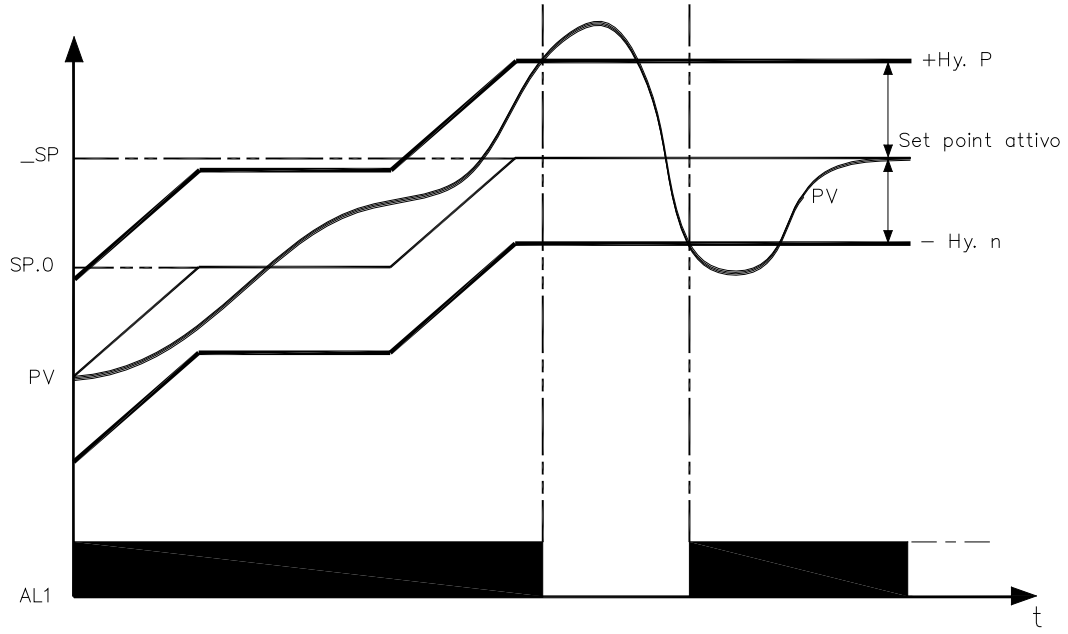


Obtain burner consent by configuring alarm 1 as inverse deviation with positive hysteresis Hy.P and negative hysteresis Hy.n

## 8 • PRE-HEATING FUNCTION

Enable the pre-heating function by setting parameters GS.0, Ht.0, GS.1 other than zero.
It consists of three phases that are activated sequentially at firing:

- **Ramp 0 phase**
  Enabled by setting GS.0 > 0. Starting from setpoint = PV (initial state), it reaches pre-heating set SP.0 with gradient GS.0
- **Maintenance phase**
  Enabled by setting Ht.0 > 0. Maintains pre-heating setpoint SP.0 for time Ht.0
- **Ramp 1 phase**
  Enabled by setting GS.1 > 0. Starting from pre-heating setpoint SP.0, it reaches active _SP set with gradient GS.1

In case of selftuning, the pre-heating function is not activated

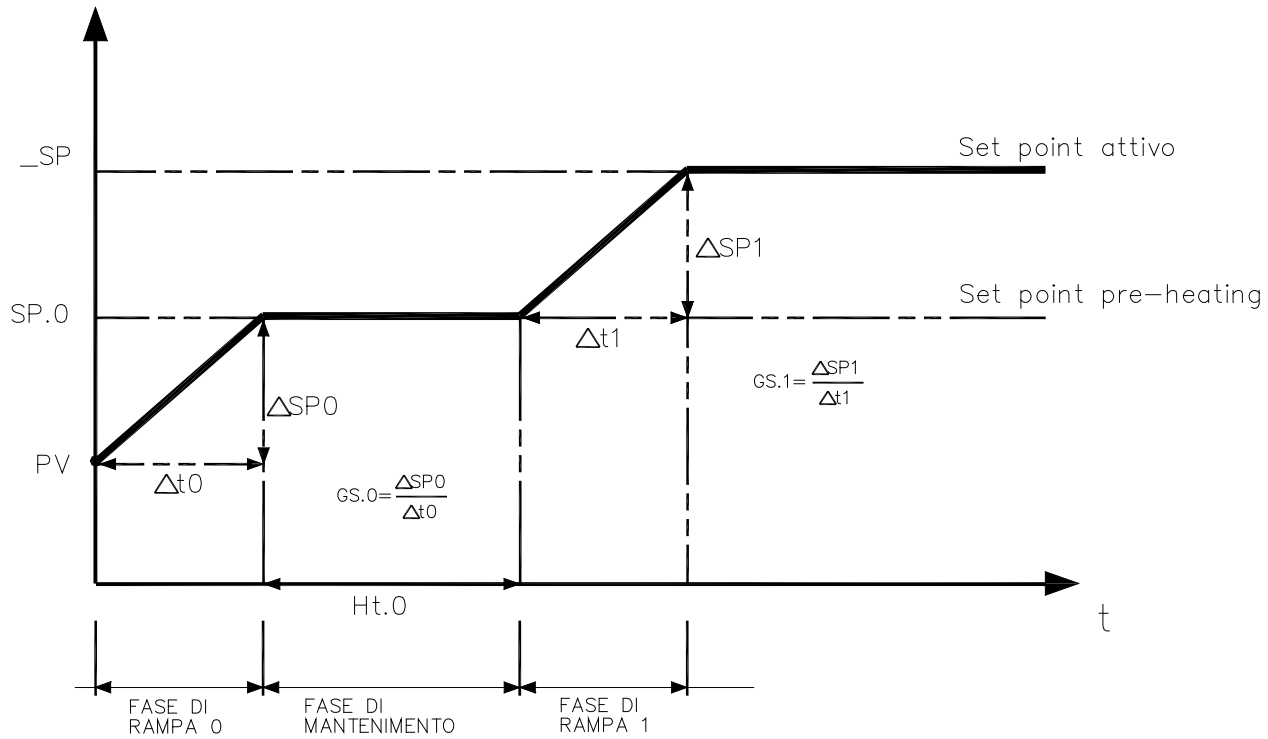

# 9 • ADJUSTMENT WITH MOTORIZED VALVE

In an adjustment process the adjustment valve has the function of varying fuel delivery (frequently corresponding to the thermal energy introduced into the process) in relation to the signal coming from the controller.
For this purpose it is provided with an actuator able to modify its opening value, overcoming the resistances produced by the fluid passing inside it.
The adjustment valves vary the delivery in a modulated manner, producing finite variations in the fluid passage inner area corresponding to finite variations of the actuator input signal, coming from the controller. The servomechanism, for example, comprises an electric motor, a reducer and a mechanical transmission system which actions the valve.
Various auxiliary components can be present such as the mechanical and electrical safety end travels, manual actioning systems.

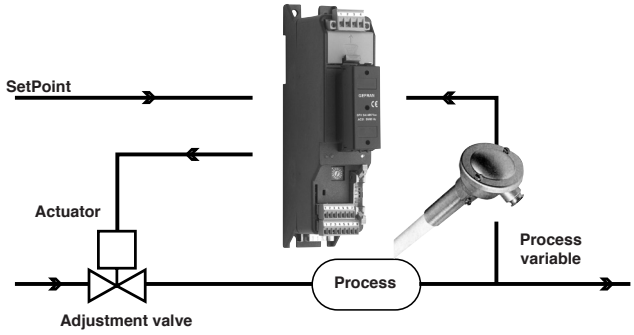


CONTROL EXAMPLE FOR V0 VALVE

The controller determines, on the basis of the dynamics of the process, the control output for the valve corresponding to the opening of the same in such a way so as to maintain the desired value of the process variable.

## Characteristic parameters for valves control

- Actuator time (Ac.t) is the time employed by the valve to pass from entirely open to entirely closed (or vice-versa), and can be set with a resolution of one second. It is a mechanical feature of the valve+actuator unit.
**NOTE**: if the actuator's travel is mechanically limited it is necessary to proportionally reduce the Ac.t value.

- Minimum impulse (t.Lo) expressed as a % of the actuator time (resolution 0.1%).
Represents the minimum change in position corresponding to a minimum change in power supplied by the instrument below which the actuator will not physically respond to the command.
This represents the minimum variation in position due to which the actuator does not physically respond to the command.
The minimum duration of the movement can be set in t.Lo, expressed as a % of actuator time.
- Impulsive intervention threshold (t.Hi) expressed as a % of the actuator time (resolution 0.1%) represents the position displacement (requested position – real position) due to which the manoeuvre request becomes impulsive.

You can choose between 2 types of control:
1) ON time of movement = t.on and OFF time proportional to shift and greater than or equal to t.Lo (we recommend setting t.on = t.Lo) (set t.oF = 0).
2) ON time of movement = t.on and OFF time = t.oF. A value set for t.oF < t.on is forced to t.on. To activate this type, set t.oF < > 0.
The type of movement approach allows fine control of the reverse drive valve (from potentiometer or not), especially useful in cases of high mechanical inertia.
Set t.Hi = 0 to exclude modulation in positioning.
This type of modulated approach allows precise control of the feedback actioned valve, by a potentiometer or not, and is especially useful in cases of high mechanical inertia. Setting t.Hi = 0 excludes modulation in positioning.

- Dead zone(dE.b) is a displacement band between the adjustment setpoint and the process variable within which the controller does not supply any command to the valve (Open = OFF; Close = OFF). It is expressed as a percentage of the bottom scale and is positioned below the setpoint.
The dead zone is useful in an operative process to avoid straining the actuator with repeated commands and an insignificant effect on the adjustment. Setting dE.b = 0 the dead zone is excluded.

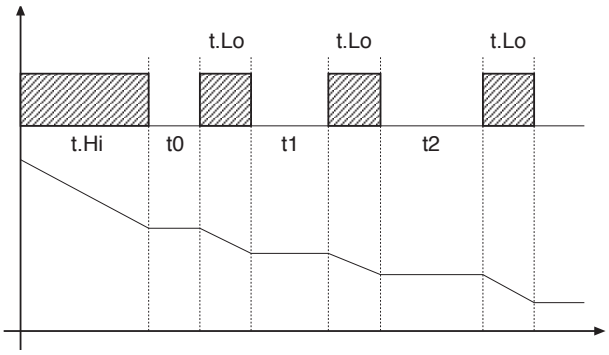


Graph of behavior inside the band with integral time ≠ 0.

With integral time = 0, movement ON time is always equal to OFF time.

t0 = t.Lo

## Valve control modes

With the controller in manual, the setting of parameter At.y ≥ 8 allows direct control of the valve open and close commands through the keyboard Increments and Decrements on the front seats.

**V0** - for floating valve without potentiometer

Model V0 have similar behaviour: every manoeuvre request greater than the minimum impulse t.Lo is sent to the actuator by means of the OPEN/CLOSE relays; every action updates the presumed position of the virtual potentiometer calculated on the basis of the actuator travel declared time.
In this way there is always a presumed position of the valve which is compared with the position request of the controller.
Having reached a presumed extreme position (entirely open or entirely closed determined by the “virtual potentiometer”) the controller provides a command in the same direction, in this way ensuring the real extreme position is reached (minimum command time = t.on).
The actuators are usually protected against the OPEN command in the entirely open position or CLOSE command in the entirely closed position.

**V3** - for floating valve, PI control

When the difference between the position calculated by the controller and the only proportional component exceeds the value corresponding to the minimum impulse t.Lo the controller provides an OPEN or CLOSE command of the duration of the minimum impulse itself t.Lo.
At each delivery the integral component of the command is set to zero (discharge of the integral).
The frequency and duration of the impulses is correlated to the integral time (h.it or c.it).

*Non-movement behavior*
t.Hi = 0: with power = 100% or 0.0%, the corresponding open or close outputs always remain enabled (safety status).

*Movement behavior*
t.Hi < > 0: with position attained corresponding to 100% or 0.0%, the corresponding open or close outputs are switched off.

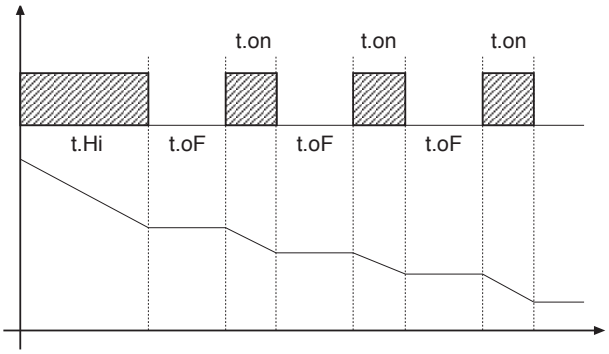


If t.oF = 0, current function is maintained.

If t.oF ≠ 0 movement mode will be as shown on the graph

# 10 • CONTROL ACTIONS

*Proportional Action*:
action in which contribution to output is proportional to deviation at input (deviation = difference between controlled variable and setpoint).
*Derivative Action*:
action in which contribution to output is proportional to rate of variation input deviation.
*Integral Action*:
action in which contribution to output is proportional to integral of time of input deviation.

**Influence of Proportional, Derivative and Integral actions on response of process under control**

* An increase in P.B. reduces oscillations but increases deviation.
* A reduction in P.B. reduces the deviation but provokes oscillations of the controlled variable (the system tends to be unstable if P.B. value is too low).
* An increase in Derivative Action corresponds to an increase in Derivative Time, reduces deviation and prevents oscillation up to a critical value of Derivative Time, beyond which deviation increases and prolonged oscillations occur.
* An increase in Integral Action corresponds to a reduction in Integral Time, and tends to eliminate deviation between the controlled variable and the setpoint when the system is running at rated speed.

If the Integral Time value is too long (Weak integral action), deviation between the controlled variable and the setpoint may persist.
Contact GEFRAN for more information on control actions.

# 11 • MANUAL TUNING

**A)** Enter the setpoint at its working value.
**B)** Set the proportional band at 0.1% (with on-off type setting).
**C)** Switch to automatic and observe the behavior of the variable. It will be similar to that in the figure:

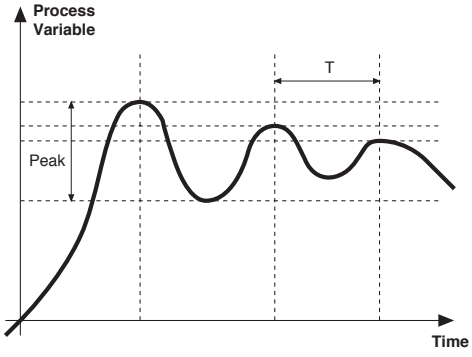


**D**) The PID parameters are calculated s follows: Proportional band

$$P.B. = \frac{\text{Peak}}{(V\ max - V\ min)} \times 100$$

(V max - V min) is the scale range.
Integral time: It = 1.5 x T
Derivative time: dt = It/4
**E)** Switch the unit to manual, set the calculated parameters. Return to PID action by setting the appropriate relay output cycle time, and switch back to Automatic.
**F)** If possible, to optimize parameters, change the setpoint and check temporary response. If an oscillation persists, increase the proportional band. If the response is too slow, reduce it.

# 12 • SET GRADIENT

SET GRADIENT: if set to ≠0, the setpoint is assumed equal to PV at power-on and auto/man switchover. With gradient set, it reaches the local setpoint.
Every variation in setpoint is subject to a gradient.
The set gradient is inhibited at power-on when self-tuning is engaged.
If the set gradient is set to ≠0, it is active even with variations of the local setpoint.
The control setpoint reaches the set value at the speed defined by the gradient.

# 13 • SOFTWARE ON / OFF SWITCHING FUNCTION

**How to switch the unit OFF:** hold down the “F” and “Raise” keys simultaneously for 5 seconds to deactivate the unit, which will go to the OFF state while keeping the line supply connected and keeping the process value displayed. The SV display is OFF.
All outputs (alarms and controls) are OFF (logic level 0, relays de-energized) and all unit functions are disabled except the switch-on function and digital communication.
**How to switch the unit ON:** hold down the “F” key for 5 seconds and the unit will switch OFF to ON. If there is a power failure during the OFF state, the unit will remain in OFF state at the next power-up (ON/OFF state is memorized).
The function is normally enabled, but can be disabled by setting the parameter Prot = Prot +16.

# 14 • SELF-TUNING

The function works for single output systems (heating or cooling). The self-tuning action calculates optimum control parameter values during process startup. The variable (for example, temperature) must be that assumed at zero power (room temperature).
The controller supplies maximum power until an intermediate value between starting value and setpoint is reached, after which it zeros power.
PID parameters are calculated by measuring overshoot and the time needed to reach peak. When calculations are finished, the system disables automatically and the control proceeds until the setpoint is reached.

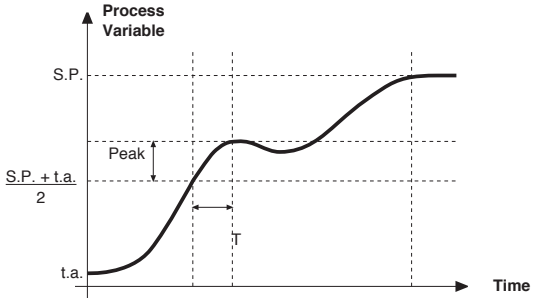


**How to activate self-tuning:**
**A. Activation at power-on**
1. Set the setpoint to the required value
2. Enable selftuning by setting the Stun parameter to 2 (CFG menu)
3. Turn off the instrument
4. Make sure the temperature is near room temperature
5. Turn on the instrument again

**B. Activation from keyboard**
1. Make sure that key M/A is enabled for Start/Stop selftuning (code but = 6 Hrd menu)
2. Bring the temperature near room temperature
3. Set the setpoint to the required value
4. Press key M/A to activate selftuning (Attention: selftuning interrupts if the key is pressed again)

The procedure runs automatically until finished, when the new PID parameters are stored: proportional band, integral and derivative times calculated for the active action (heating or cooling). In case of double action (heating or cooling), parameters for the opposite action are calculated by maintaining the initial ratio between parameters (ex.: CPb = HPb * K; where K = CPb / HPb when self-tuning starts). When finished, the Stun code is automatically cancelled.

**Notes :**
-The procedure does not start if the temperature is higher than the setpoint (heating control mode) or if the temperature is lower than the setpoint (cooling control mode). In this case , the Stu code is not cancelled.
-It is advisable to eneable one of the configurable LEDs to signal selftuning status.By setting one of parameters LED1, LED2, LED3=4 or 20 on the Hrd menu, the respective LED will be on or flashing when selftuning is active.

# 15 • ACCESSORIES

## • Interface for instrument configuration

*KIT PC USB / RS485 o TTL*

Kit for PC via the USB port (Windows environment) for GEFRAN instruments configuration:
Lets you read or write all of the parameters
• A single software for all models
• Easy and rapid configuration
• Saving and management of parameter recipes
• On-line trend and saving of historical data
Component Kit:
- Connection cable PC USB ... port TTL
- Connection cable PC USB ... RS485 port
- Serial line converter
- CD SW GF Express installation

## • ORDERING CODE

| | |
|---|---|
| **GF_eXK-2-0-0** | cod F049095 |

# 16 • ORDER CODE

600V [R] [R] [R] [-]

| UTPUT 1 | |
|---|---|
| Relay | R |

| UTPUT 2 | |
|---|---|
| Relay | R |

| UTPUT 3 | |
|---|---|
| Relay | R |

| POWER SUPPLY | |
|---|---|
| 0 | 11...27Vac/dc |
| 1 | 100...240Vac |

## • WARNINGS

WARNING: this symbol indicates danger. It is placed near the power supply circuit and near high-voltage relay contacts.

**Read the following warnings before installing, connecting or using the device:**
• follow instructions precisely when connecting the device.
• always use cables that are suitable for the voltage and current levels indicated in the technical specifications.
• the device has no ON/OFF switch: it switches on immediately when power is turned on. For safety reasons, devices permanently connected to the power supply require a two-phase disconnecting switch with proper marking. Such switch must be located near the device and must be easily reachable by the user. A single switch can control several units.
• if the device is connected to electrically NON-ISOLATED equipment (e.g. thermocouples), a grounding wire must be applied to assure that this connection is not made directly through the machine structure.
• if the device is used in applications where there is risk of injury to persons and/or damage to machines or materials, it MUST be used with auxiliary alarm units. You should be able to check the correct operation of such units during normal operation of the device.
• before using the device, the user must check that all device parameters are correctly set in order to avoid injury to persons and/or damage to property.
• the device must NOT be used in infiammable or explosive environments. It may be connected to units operating in such environments only by means of suitable interfaces in conformity to local safety regulations.
• the device contains components that are sensitive to static electrical discharges. Therefore, take appropriate precautions when handling electronic circuit boards in order to prevent permanent damage to these components.
***Installation***: installation category II, pollution level 2, double isolation
The equipment is intended for permanent indoor installations within their own enclosure or panel mounted enclosing the rear housing and exposed terminals on the back.
• only for low power supply: supply from Class 2 or low voltage limited energy source
• power supply lines must be separated from device input and output lines; always check that the supply voltage matches the voltage indicated on the device label.
• install the instrumentation separately from the relays and power switching devices
• do not install high-power remote switches, contactors, relays, thyristor power units (particularly if “phase angle” type), motors, etc... in the same cabinet.
• avoid dust, humidity, corrosive gases and heat sources.
• do not close the ventilation holes; working temperature must be in the range of 0...50°C.
• surrounding air: 50°C
• use 60/75°C copper (Cu) conductor only, wire size range 2x No 22 - 14AWG, Solid/Stranded
• use terminal tightening torque 0.5N m
If the device has faston terminals, they must be protected and isolated; if the device has screw terminals, wires should be attached at least in pairs.
• *Power*: supplied from a disconnecting switch with fuse for the device section; path of wires from switch to devices should be as straight as possible; the same supply should not be used to power relays, contactors, solenoid valves, etc.; if the voltage waveform is strongly distorted by thyristor switching units or by electric motors, it is recommended that an isolation transformer be used only for the devices, connecting the screen to ground; it is important for the electrical system to have a good ground connection; voltage between neutral and ground must not exceed 1V and resistance must be less than 6Ohm; if the supply voltage is highly variable, use a voltage stabilizer for the device; use line filters in the vicinity of high frequency generators or arc welders; power supply lines must be separated from device input and output lines; always check that the supply voltage matches the voltage indicated on the device label.
• *Input and output connections*: external connected circuits must have double insulation; to connect analog inputs (TC, RTD) you have to: physically separate input wiring from power supply wiring, from output wiring, and from power connections; use twisted and screened cables, with screen connected to ground at only one point; to connect adjustment and alarm outputs (contactors, solenoid valves, motors, fans, etc.), install RC groups (resistor and capacitor in series) in parallel with inductive loads that work in AC *(Note: all capacitors must conform to VDE standards (class x2) and support at least 220 VAC. Resistors must be at least 2W)*; fit a 1N4007 diode in parallel with the coil of inductive loads that operate in DC.
**GEFRAN spa will not be held liable for any injury to persons and/or damage to property deriving from tampering, from any incorrect or erroneous use, or from any use not conforming to the device specifications.**

# Set-up for 600V RRR0-1-T73 regulator

## Set up for temperature probe Pt100 (ex Siemens QAE2120 130°C max.)

The regulator comes out of the factory preset with the corresponding values of the Siemens RWF40.000 and RWF50.2x

Verify wiring of the sensor

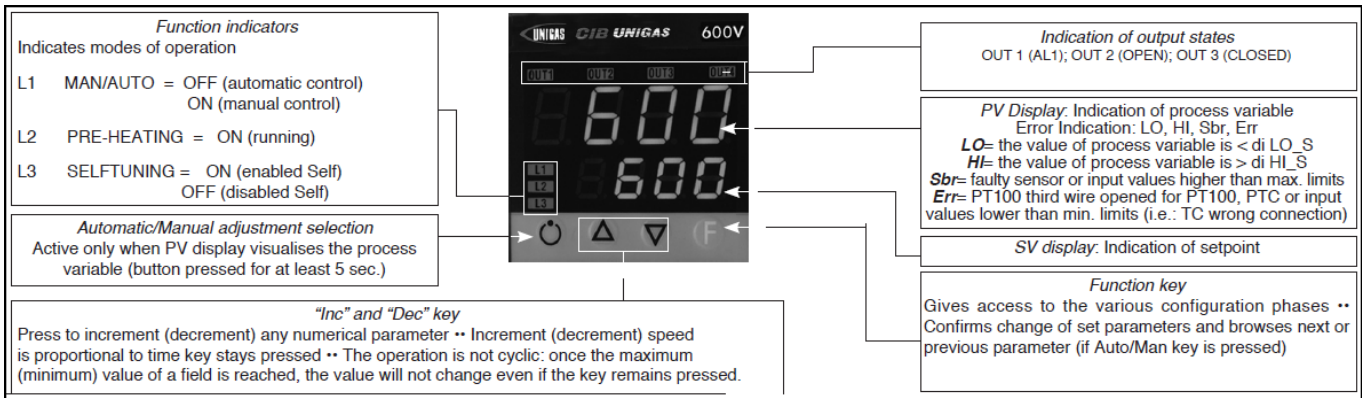


Regulation of the set-point = **80**
It can be modified by using arrows "up" and "down".
By pushing **F** you go to parameters:

| | |
|---|---|
| Hy.P | 5 (hysteresis positive for output 1, terminals 21-22 (ex Q13-Q14) |
| Hy.n | -5 hysteresis negative for output ,1 terminals 21-22 (ex Q13-Q14) |

Keep pushing **F** until you see **PASS**, release **F** and through the arrows set **99**, push **F** and visualize **Pro** (protection code) default is **12**, through the arrows set **128** and push **F,** keep it pushed until all parameters **InF**, **CFG**, **InP**, **Out**, **PASS** are visualized.

| **CFG** | |
|---|---|
| S.tun | 0 |
| hPb | 1,2 |
| hIt | 5,83 |
| hdt | 1,33 |
| … | |

| **InP** | |
|---|---|
| …. | |
| tyP | 30 (Pt100) |
| … | |
| dP_S | 1 (decimals num.) |
| Lo.S | 0 (min. sensor scale) |
| Hi.S | 850,0 (max sensor scale) |
| oFS | 0 (offset of input correction) |
| Lo.L | 30,0 (lower set-point range limit) |
| Hi.L | 130,0 (upper set-point range limit) |

| **Out** | |
|---|---|
| A1.r | 0 |
| … | |
| A1.t | 3 (operating mode AL1 =inverse-relative-normal) |
| … | |
| rL.1 | 2 (AL1) |
| rL.2 | 18 (open) |
| rL.3 | 19 (close) |
| rEL | 0 |
| A.ty | 9 (type of servocontrol command) |
| Ac.t | 12 (servocontrol running time: SQN72.4…/STA12..=12; SQM40.265=30) |
| t_Lo | 2 |
| t_Hi | 0.0 |
| t.on | 2 |
| t.oF | 0.0 |
| dE.b | 0,1 (dead zone in % of end scale) |
| | |

| **PAS** | 99 then push and keep pushed **F** until visualization of **Hrd** |
|---|---|
| | |
| **Hrd** | |
| … | |
| CtrL | 6 (PID warm) |
| AL.nr | 1 |
| but | 1 |
| diSP | 0 |
| Ld.1 | 1 |
| Ld.2 | 28 |
| Ld.3 | 20 |

Keep pushed **F** until you visualize **PASS**, release **F** and through the arrows set **99**, push **F** and visualize **Pro** (protection code) from **128**, through the arrows, bring it back to **12,** and keep **F** pushed until you come back to set-point value.

**Manual operation** :
Keep pushed the lower left key for at least 5 sec.
The instrument will enter the "MAN" mode (see also "Ld1" switching on).
Through the arrows, "Open" and "Close" outputs are activated.
To come back to normal working keep the lower left key pushed for at least 5 sec.

**Software switch off** :
By keeping pushed keys **Arrow up** + **F** for more than 5 sec. the instrument switches off the software, does not command the outputs and visualize only the variable of process measured by the probe.
To restore keep pushed **F** for more than 5 sec.

## Set up for temperature probe Pt100 for high temperature (350°C max.)

Verify wiring of the sensor

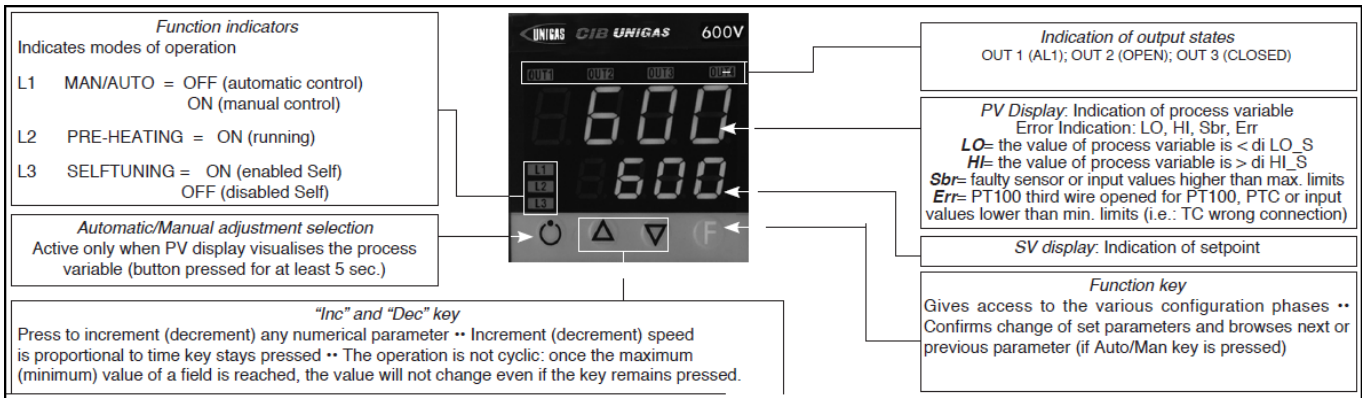


Regulation of the set-point = **80**
It can be modified by using arrows "up" and "down".
By pushing **F** you go to parameters:

| | |
|---|---|
| Hy.P | 10 (hysteresis positive for output 1 terminals 21-22 (ex Q13-Q14) |
| Hy.n | -5 (hysteresis negative for output 1 terminals 21-22 (ex Q13-Q14) |

Keep pushing **F** until you see **PASS**, release **F** and through the arrows set **99**, push **F** and visualize **Pro** (protection code) default is **12**, through the arrows set **128** and push **F,** keep it pushed until all parameters **InF**, **CFG**, **InP**, **Out**, **PASS** are visualized.

| **CFG** | |
|---|---|
| S.tun | 0 |
| hPb | 1,2 |
| hIt | 5,83 |
| hdt | 1,33 |
| … | |

| **InP** | |
|---|---|
| …. | |
| tyP | 30 (Pt100) |
| … | |
| dP_S | 1 (decimals num.) |
| Lo.S | 0 (min. sensor scale) |
| Hi.S | 850,0 (max sensor scale) |
| oFS | 0 (offset of input correction) |
| Lo.L | 0,0 (lower set-point range limit) |
| Hi.L | 350,0 (upper set-point range limit) |

| **Out** | |
|---|---|
| A1.r | 0 |
| … | |
| A1.t | 3 (mode AL1 =inverse-relative-normal) |
| … | |
| rL.1 | 2 (AL1) |
| rL.2 | 18 (open) |
| rL.3 | 19 (close) |
| rEL | 0 |
| A.ty | 9 (type of servocontrol command) |
| Ac.t | 12 (servocontrol running time: SQN72.4…/STA12..=12; SQM40.265=30) |
| t_Lo | 2 |
| t_Hi | 0.0 |
| t.on | 2 |
| t.oF | 0.0 |
| dE.b | 0,1 (dead zone in % of end scale) |

| **PAS** | 99 then push and keep pushed **F** until visualization of **Hrd** |
|---|---|
| | |
| **Hrd** | |
| … | |
| CtrL | 6 (PID warm) |
| AL.nr | 1 |
| but | 1 |
| diSP | 0 |
| Ld.1 | 1 |
| Ld.2 | 28 |
| Ld.3 | 20 |

Keep pushed **F** until you visualize **PASS**, release **F** and through the arrows set **99**, push **F** and visualize **Pro** (protection code) from **128**, through the arrows, bring it back to **12,** and keep **F** pushed until you come back to set-point value.

**Manual operation**:
Keep pushed the lower left key for at least 5 sec.
The instrument will enter the "MAN" mode (see also "Ld1" switching on).
Through the arrows, "Open" and "Close" outputs are activated.
To come back to normal working keep the lower left key pushed for at least 5 sec.

**Software switch off** :
By keeping pushed keys **Arrow up** + **F** for more than 5 sec. the instrument switches off the software, does not command the outputs and visualize only the variable of process measured by the probe.
To restore keep pushed **F** for more than 5 sec.

## Set up for pressure transmitter 2 wires signal 4÷20mA

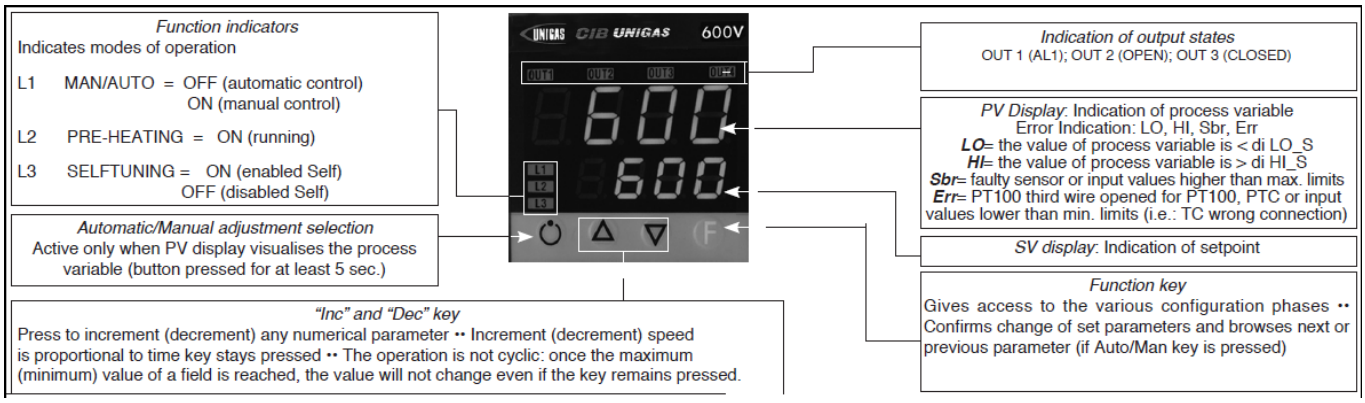


With pressure transmitters first we need to enable their power supply: remove the part as shown below, then, on the CPU unit, move the bridge from Pt100 to +Vt

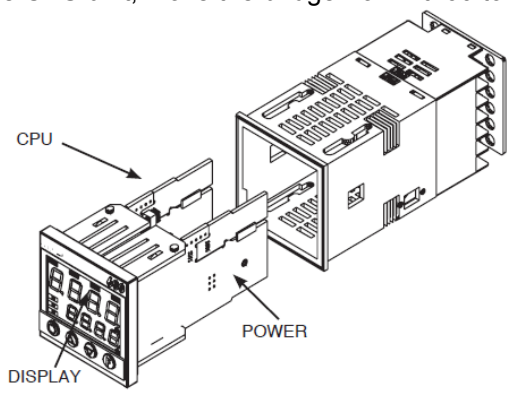


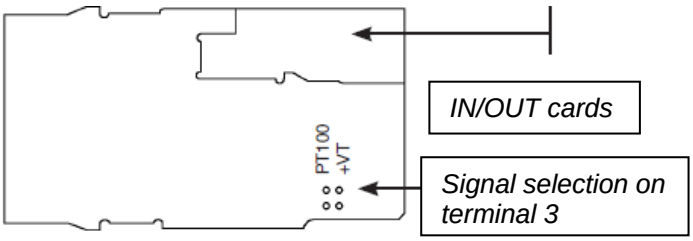


Verify wiring of the sensor

Impostazione set-point

| Transmitter | **1,6bar** | **3bar** | **10bar** | **16bar** | **25bar** | **40bar** |
|---|---|---|---|---|---|---|
| Set-point | 1bar | 1,5bar | 6bar | 6bar | 6bar | 6bar |

To modify it directly use "up" and "down" arrows.
By pushing **F** you go to parameter:

| Transmitter | **1,6bar** | **3bar** | **10bar** | **16bar** | **25bar** | **40bar** |
|---|---|---|---|---|---|---|
| Hy.P | 0,2bar | 0,5bar | 0,5bar | 0,8bar | 1,25bar | 2bar |
| Hy.n | 0bar | 0bar | 0bar | 0bar | 0bar | 0bar |

Keep pushing **F** until you see **PASS**, release **F** and through the arrows set **99**, push **F** and visualize **Pro** (protection code) default is **12**, through the arrows set **128** and push **F,** keep it pushed until all parameters **InF**, **CFG**, **InP**, **Out**, **PASS** are visualized.

| **CFG** | |
|---|---|
| S.tun | 0 |
| hPb | 5 |
| hIt | 1,33 |
| hdt | 0,33 |
| … | |

| InP | |
|---|---|
| …. | |
| tyP | 44 (4÷20mA) |
| … | |
| dP_S | 2 (decimals num.) |

| Transmitter | **1,6bar** | **3bar** | **10bar** | **16bar** | **25bar** | **40bar** | |
|---|---|---|---|---|---|---|---|
| Lo.S | 0,00 | 0,00 | 0,00 | 0,00 | 0,00 | 0,00 | min. sensor scale |
| Hi.S | 1,60 | 3,00 | 10,00 | 16,00 | 25,00 | 40,00 | max sensor scale |
| oFS | 0 | 0 | 0 | 0 | 0 | 0 | offset of input correction |
| Lo.L | 0,00 | 0,00 | 0,00 | 0,00 | 0,00 | 0,00 | lower set-point setting |
| Hi.L | 1,60 | 3,00 | 10,00 | 16,00 | 25,00 | 40,00 | upper set-point setting |

| Out | |
|---|---|
| A1.r | 0 |
| … | |
| A1.t | 3 (mode AL1 =inverse-relative-normal) |
| … | |
| rL.1 | 2 (AL1) |
| rL.2 | 18 (open) |
| rL.3 | 19 (close) |
| rEL | 0 |
| A.ty | 9 (type of servocontrol command) |
| Ac.t | 12 (servocontrol running time: SQN72.4…/STA12..=12; SQM40.265=30) |
| t_Lo | 2 |
| t_Hi | 0.0 |
| t.on | 2 |
| t.oF | 0.0 |
| dE.b | 0,1 (dead zone in % of end scale) |

| PAS | 99 then push and keep pushed **F** until visualization of **Hrd** |
|---|---|
| | |
| **Hrd** | |
| … | |
| CtrL | 6 (PID warm) |
| AL.nr | 1 |
| but | 1 |
| diSP | 0 |
| Ld.1 | 1 |
| Ld.2 | 28 |
| Ld.3 | 20 |

Keep pushed **F** until you visualize **PASS**, release **F** and through the arrows set **99**, push **F** and visualize **Pro** (protection code) from **128**, through the arrows, bring it back to **12,** and keep **F** pushed until you come back to set-point value.

**Manual operation**:
Keep pushed the lower left key for at least 5 sec.
The instrument will enter the "MAN" mode (see also "Ld1" switching on).
Through the arrows, "Open" and "Close" outputs are activated.
To come back to normal working keep the lower left key pushed for at least 5 sec.

**Software switch off** :
By keeping pushed keys **Arrow up** + **F** for more than 5 sec. the instrument switches off the software, does not command the outputs and visualize only the variable of process measured by the probe.
To restore keep pushed **F** for more than 5 sec.

## Set -up for thermocouples type K or J

Verify wiring of the sensor

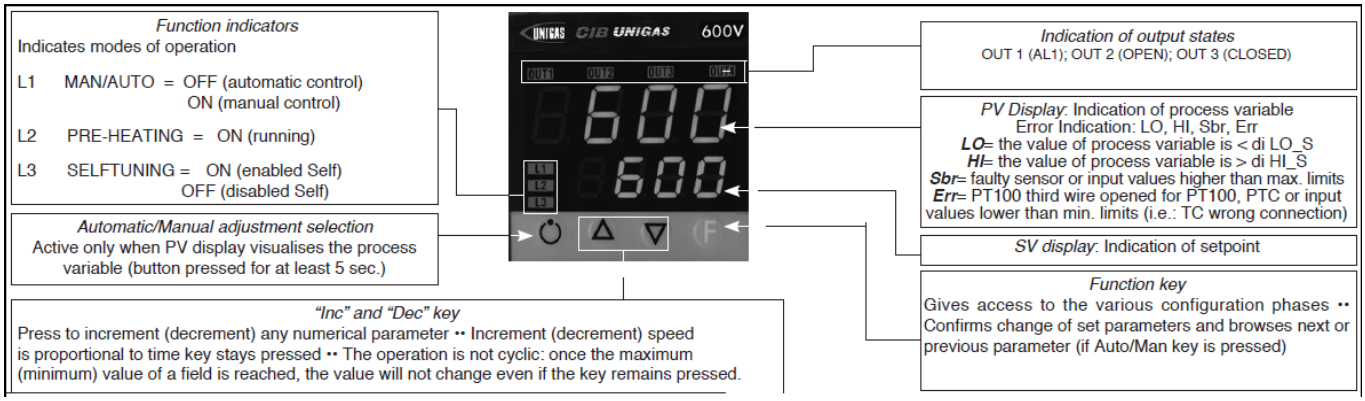


Regulation of the set-point = **80**
It can be modified by using arrows "up" and "down".
By pushing **F** you go to parameters:

| | |
|---|---|
| Hy.P | 10 (hysteresis positive for output 1 terminals 21-22 (ex Q13-Q14) |
| Hy.n | -5 (hysteresis negative for output 1 terminals 21-22 (ex Q13-Q14) |

Keep pushing **F** until you see **PASS**, release **F** and through the arrows set **99**, push **F** and visualize **Pro** (protection code) default is **12**, through the arrows set **128** and push **F,** keep it pushed until all parameters **InF**, **CFG**, **InP**, **Out**, **PASS** are visualized.

| **CFG** | |
|---|---|
| S.tun | 0 |
| hPb | 1,2 |
| hIt | 5,83 |
| hdt | 1,33 |
| … | |

| **InP** | |
|---|---|
| …. | |
| tyP | 2 (thermocouple **K** 0÷1300°C) / 0 (thermocouple **J** 0÷1000°C) |
| … | |
| dP_S | 0 (no decimal) / 1 (1 decimal) |
| Lo.S | 0 (min. sensor scale) |
| Hi.S | 1300 (max sensor scale for tc **K**) / 1000 (max sensor scale for tc **J**) |
| oFS | 0 (offset of input correction) |
| Lo.L | 0 (lower set-point range limit) |
| Hi.L | 1300 (upper set-point range limit) per tc **K** / 1000 for tc **J** |

| **Out** | |
|---|---|
| A1.r | 0 |
| … | |
| A1.t | 3 (mode AL1 =inverse-relative-normal) |
| … | |
| rL.1 | 2 (AL1) |
| rL.2 | 18 (open) |
| rL.3 | 19 (close) |
| rEL | 0 |
| A.ty | 9 (type of servocontrol command) |
| Ac.t | 12 (servocontrol running time: SQN72.4…/STA12..=12; SQM40.265=30) |
| t_Lo | 2 |
| t_Hi | 0.0 |
| t.on | 2 |
| t.oF | 0.0 |
| dE.b | 0,1 (dead zone in % of end scale) |

| **PAS** | 99 then push and keep pushed **F** until visualization of **Hrd** |
|---|---|
| | |
| **Hrd** | |
| … | |
| CtrL | 6 (PID warm) |
| AL.nr | 1 |
| but | 1 |
| diSP | 0 |
| Ld.1 | 1 |
| Ld.2 | 28 |
| Ld.3 | 20 |

Keep pushed **F** until you visualize **PASS**, release **F** and through the arrows set **99**, push **F** and visualize **Pro** (protection code) from **128**, through the arrows, bring it back to **12,** and keep **F** pushed until you come back to set-point value.

**Manual operation**:
Keep pushed the lower left key for at least 5 sec.
The instrument will enter the "MAN" mode (see also "Ld1" switching on).
Through the arrows, "Open" and "Close" outputs are activated.
To come back to normal working keep the lower left key pushed for at least 5 sec.

**Software switch off** :
By keeping pushed keys **Arrow up** + **F** for more than 5 sec. the instrument switches off the software, does not command the outputs and visualize only the variable of process measured by the probe.
To restore keep pushed **F** for more than 5 sec.

# RWF50.2x & RWF50.3x

***User manual***

M12922CB Rel.1.0 07/2012

**DEVICE INSTALLATION**

Install the device using the relevant tools as shown in the figure.
To wire the device and sensors, follow the instructions on the burner wiring diagram.

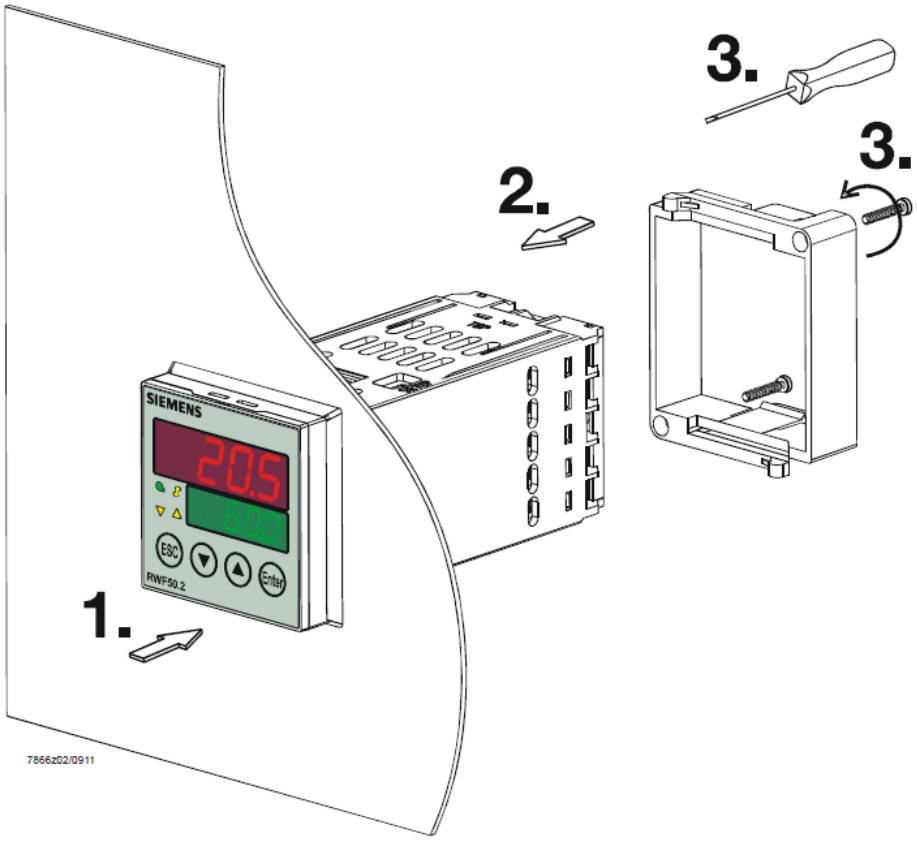


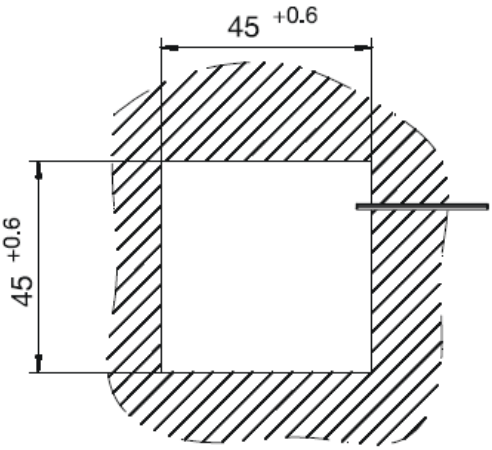

## FRONT PANEL

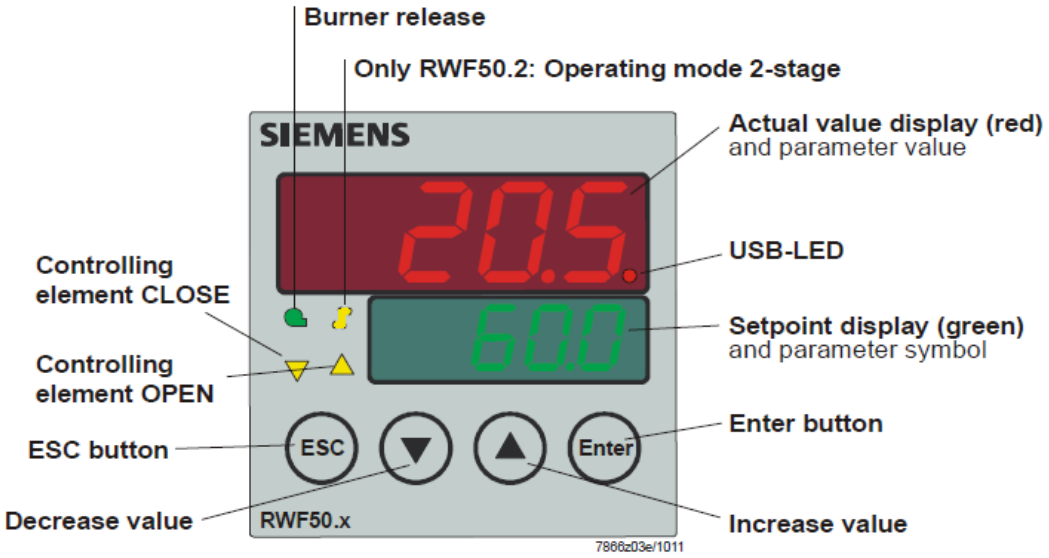


## NAVIGATION MENU

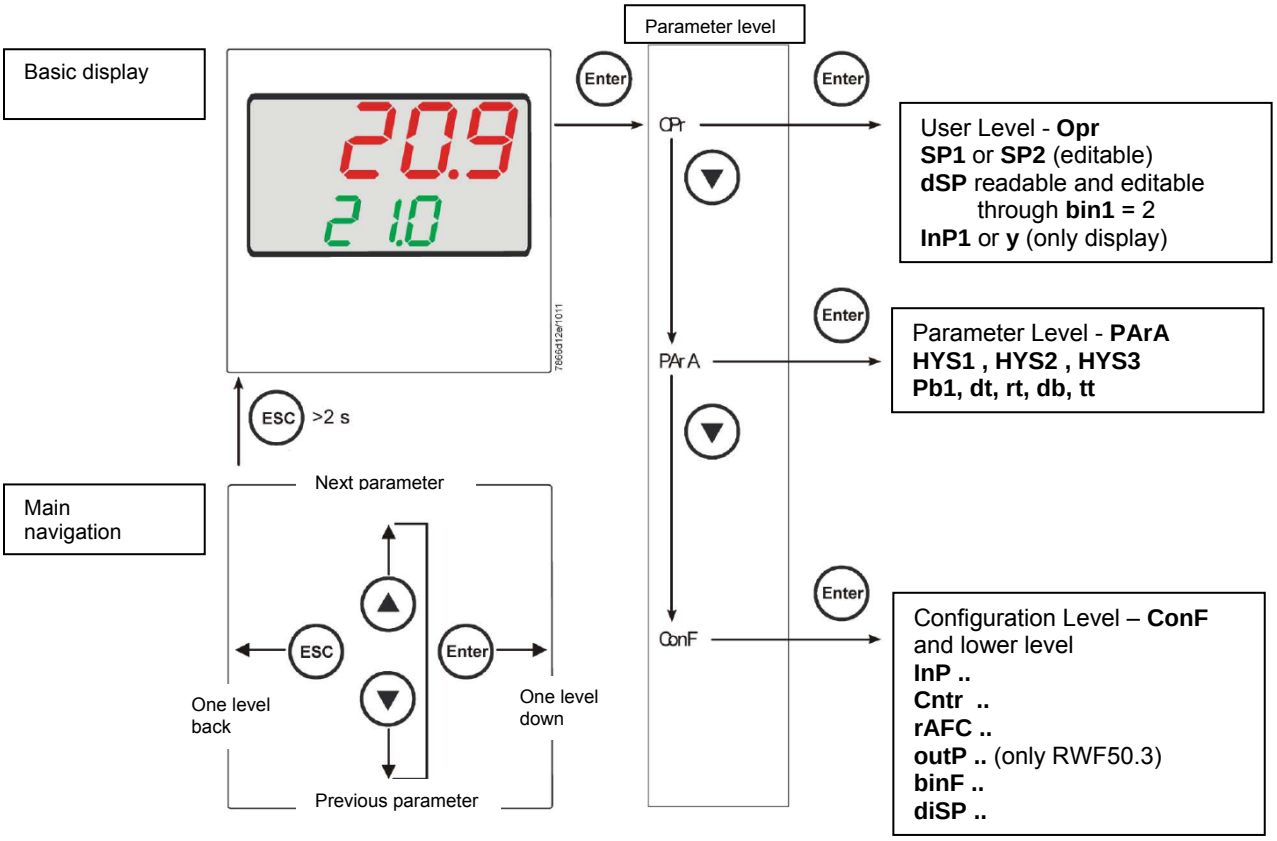

RWF5 is preset good for 90% of applications. However, you can set or edit parameters as follow:

**Set-point: set or modification:**
When the burner is in stand-by, (safety loop open, that is terminals 3-4/T1-T2 on the 7 pole plug open) push the **Enter** button: on the lower display (green) **Opr** appears; push **Enter** again and in the same display **SP1** appears. Push **Enter** again and the lower display (green **SP1**) flashes. Using the **up and down arrows** change the set-point on the upper display (red).Push **Enter** to confirm and push **ESC** more times to get the home position.

**PID parameters set and modifications (see table below):**

- Push **Enter** button, on the green display **Opr** appears; using the **down arrow,** scroll until group **PArA** is reached and push **Enter**.
- on the green display **Pb1** e appears and on the red one the set parameter.
- Push is sequence the **down or up** arrow the menu is scrolled.
- Push **Enter** to select and the **arrows** to choose the desired value. **Enter** to confirm.

| Parameter | Display | Range | Factory setting | Remarks |
|---|---|---|---|---|
| Proportional band | PB.1 | 1… 9999 digit | 10 | Typical value for temperature |
| Derivative action | dt | 0… 9999 sec. | 80 | Typical value for temperature |
| Integral action | rt | 0… 9999 sec. | 350 | Typical value for temperature |
| Dead band (*) | db | 0… 999,9 digit | 1 | Typical value |
| Servocontrol running time | tt | 10… 3000 sec. | 15 | Set servocontrol running time |
| Switch-on differential (*) | HYS1 | 0,0… -1999 digit | -5 | Value under setpoint below which the burner switches back on (1N-1P closes) |
| Switch-off differential 2° stage (*) | HYS2 | 0,0 … HYS3 | 3 | (enable only with parameter **bin1** = 4) |
| Upper switch-off differential (*) | HYS3 | 0,0… 9999 digit | 5 | Value over setpoint above which the burner switches off (1N-1P opens) |
| Switch-on differential on cooling controller (*) | HYS4 | 0,0… 9999 digit | 5 | Do not used (enable only with parameter **CACt** = 0) |
| Switch-off differential 2° stage on cooling controller (*) | HYS5 | HYS6…0,0 digit | 5 | Do not used (enable only with parameters **CACt** = 0 and **bin1** = 4) |
| Upper switch-off differential on cooling controller (*) | HYS6 | 0,0… -1999 digit | 5 | Do not used (enable only with parameter **CACt** = 0) |
| Delay modulation | q | 0,0… 999,9 digit | 0 | Do not alter |

(*)Parameters affected by setting of decimal place (**ConF > dISP** parameter **dECP**)

**Setting the kind of sensor to be connected to the device:**

- push the **Enter** button: on the lower display (green) **Opr** appears. Using the **up and down arrows** find **ConF.** Push **Enter** to confirm.
- Now on the green display the group **InP** appears. Push **Enter** and **InP1** is displaied. Enter to confirm.
- You are inside **InP1**; the green display shows **Sen1 (sensor type)**, while the red display shows the chosen sensor code
- Push **Enter** to enter the **Sen1** parameter, then choose the desired sensor using the **arrows.** Push **Enter** to confirm and **ESC** to escape.
- Once selected the sensor, you can modify all the other parameters using **up and down arrows** according to the tables here below.

## ConF > InP >InP1

| Parameter | Value | Description |
|---|---|---|
| SEn1<br>type of sensor for analog input 1 | **1** | **Pt100 3 fili** |
| | 2 | Pt100 2 fili |
| | 3 | Pt1000 3 fili |
| | 4 | Pt1000 2 fili |
| | 5 | Ni1000 3 fili |
| | 6 | Ni1000 2 fili |
| | 7 | 0 ÷ 135 ohm |
| | 15 | 0 ÷ 20mA |
| | 16 | 4 ÷ 20mA |
| | 17 | 0 ÷ 10V |
| | 18 | 0 ÷ 5V |
| | 19 | 1 ÷ 5V |
| OFF1<br>sensor offset | -1999..**0**.. +9999 | Using the measured value correction (offset), a measured value can be corrected to a certain degree, either up or down |
| SCL1<br>scale low level | -1999..**0**.. +9999 | In the case of a measuring transducer with standard signal, the physical signal is assigned a display value here<br>(for input ohm, mA, V) |
| SCH1<br>scale high level | -1999..**100**.. +9999 | In the case of a measuring transducer with standard signal, the physical signal is assigned a display value here<br>(for input ohm, mA, V) |
| dF1<br>digital filter | 0…**0,6**…100 | Is used to adapt the digital 2nd order input filter<br>(time in s; 0 s = filter off) |
| Unit<br>temperature unit | **1**<br>2 | **1 = degrees Celsius**<br>2 = degrees Fahrenheit |

(**bold** = factory settings)

**Remark:**
RWF50.2 e RWF50.3 cannot be connected to thermocouples.
If thermocouples have to be connected, convert the signal to a 4-20 mA one and set the RWF accordingly.

## ConF > Cntr

| Parameter | Value | Description |
|---|---|---|
| CtYP<br>controller type | **1**<br>2 | **1 = 3-position controller (open-stop-close only RWF50.2)**<br>2 = continuative action controller (only RWF50.3) |
| CACt<br>control action | **1**<br>0 | **1 = heating controller**<br>0 = cooling controller |
| SPL<br>least value of the set-point range | -1999..**0**..+9999 | set-point limitation prevents entry of values outside the defined range |
| SPH<br>maximum value of the set-point range | -1999..**100**..+9999 | set-point limitation prevents entry of values outside the defined range |
| oLLo<br>set-point limitation start, operation limit low | **-1999**.... +9999 | lower working range limit |
| oLHi<br>set-point limitation end, operation limit high | -1999.... **+9999** | upper working range limit |

(**bold** = factory settings)

## ConF > rAFC

**Activation boiler shock termic protetion:**
RWF50.. can activate the thermal shock protection only on sites where the set-point is lower than 250°C and according to **rAL** parameter.

| Parameter | Value | Description |
|---|---|---|
| FnCT<br>function | **0**<br>1<br>2 | Choose type of range degrees/time<br>**0 = deactivated**<br>1 = Kelvin degrees/minute<br>2 = Kelvin degrees/hour |
| rASL<br>ramp rate | **0,0 …** 999,9 | Slope of thermal shock protection (only with functions 1 and 2) |
| toLP<br>tolerance band ramp | **0**…9999 | width of tolerance band (in K) about the set-point<br>**0 = tolerance band inactive**<br> 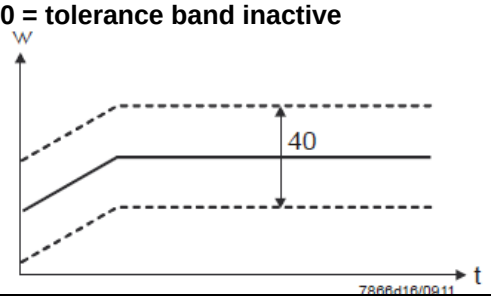 |
| rAL<br>ramp limit | **0**…250 | Ramp limit. When this value is lower than the temperature set-point, the RWF controls the output increasing the temp set point step by step according to rASL. If this is over the temp set point, the control is performed in cooling. |

(**bold** = factory settings)

## ConF > OutP (parameter under group only for RWF50.3)

| Parameter | Value | Description |
|---|---|---|
| FnCt<br>tipo di controllo | 1<br>**4** | 1 = analog input 1 doubling with possibility to convert (depending on par **SiGn**)<br>**4 = modulation controller** |
| SiGn<br>type of output signal | **0**<br>1<br>2 | physical output signal (terminals A+, A-)<br>**0 = 0÷20mA**<br>1 = 4÷20mA<br>2 = 0÷10V |
| rOut<br>Value when out of input range | **0**…101 | signal (in percent) when measurement range is crossed |
| oPnt<br>zero point | -1999…**0**..+9999 | value range of the output variable is assigned to a physical output signal Per default, the setting corresponds to 0...100% angular positioning for the controller outputs (terminals A+, A-) (effective only with **FnCt** = 1) |
| End<br>End value | -1999…**100**..+9999 | value range of the output variable is assigned to a physical output signal Per default, the setting corresponds to 0...100% angular positioning for the controller outputs (terminals A+, A-) (effective only with **FnCt** = 1) |

(**bold** = factory settings)

## ConF > binF

| Parameter | Value | Description |
|---|---|---|
| bin1<br>digital inputs<br>(terminals DG - D1) | **0**<br>1<br>2<br>4 | **0 = without function**<br>1 = set-point changeover (SP1 / SP2)<br>2 = set-point shift (**Opr** > **dSP** parameter = value of set-point modify)<br>4 = changeover of operating mode<br>open – modulating operation;<br>close – 2 stage operation. |

(**bold** = factory settings)

## ConF > dISP

| Parameter | Value | Description |
|---|---|---|
| diSU<br>upper display<br>(red) | 0<br>**1**<br>4<br>6<br>7 | display value for upper display:<br>0 = display power-off<br>**1 = analog input value**<br>4 = Controller's angular positioning<br>6 = set-point value<br>7 = end value with thermal shock protection |
| diSL<br>lower display<br>(green) | 0<br>1<br>4<br>**6**<br>7 | display value for lower display:<br>0 = display power-off<br>1 = analog input value<br>4 = Controller's angular positioning<br>**6 = set-point value**<br>7 = end value with thermal shock protection |
| tout<br>timeout | 0..**180**..250 | time (s) on completion of which the controller returns automatically to the basic display, if no button is pressed |
| dECP<br>decimal point | **0**<br>1<br>2 | **0 = no decimal place**<br>1 = one decimal place<br>2 = two decimal places |
| CodE<br>level lockout | **0**<br>1<br>2<br>3 | **0 = no lockout**<br>1 = configuration level lockout (ConF)<br>2 = Parameter and configuration level lockout (PArA & ConF)<br>3 = keyboard lockout |

(**bold** = factory settings)

**Manual control :**

- in order to manual change the burner load, while firing keep pushing the **ESC** button for more than 5 s; on the lower green display **Hand** appears.
- using the **UP** and **DOWN** arrows, the load varies.
- Keep pushing the **ESC** button for getting the normal operation again.
- **NB:** every ime the device shuts the burner down (start led switched off - contact 1N-1P open), the manual control is not active.

**Device self-setting (auto-tuning):**
If the burner in the steady state does not respond properly to heat generator requests, you can activate the Device's self-setting function, which recalculates PID values for its operation, deciding which are most suitable for the specific kind of request

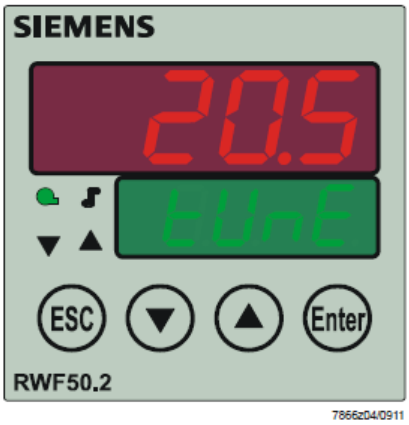


Follow the below instructions:
push the **UP** and **DOWN** arrows for more than 5 s; on the green lower display **TUNE** appears. Now the device pushes the burner to increase and decrease its output. During this time, the device calculates PID parameters (**Pb1, dt** and **rt**). After the calculations, the TUNE is automatically deactivated and the device has already stored them.
In order to stop the Auto-tuning function while it works, push again the **UP** and **DOWN** arrows for more than 5 s. The calculated PID parameters can be manually modified following the previously described instructions.

**Display of software version :**

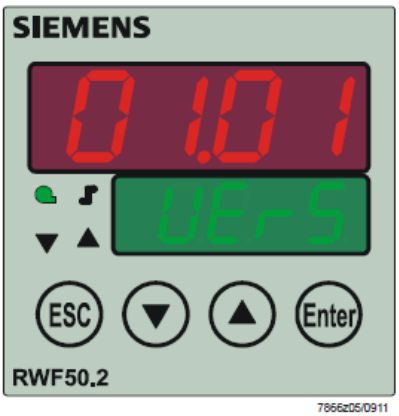


The software version is shown by pushing **Enter + UP arrow** on the upper display

**Electric connection :**

With 7 pins connector version

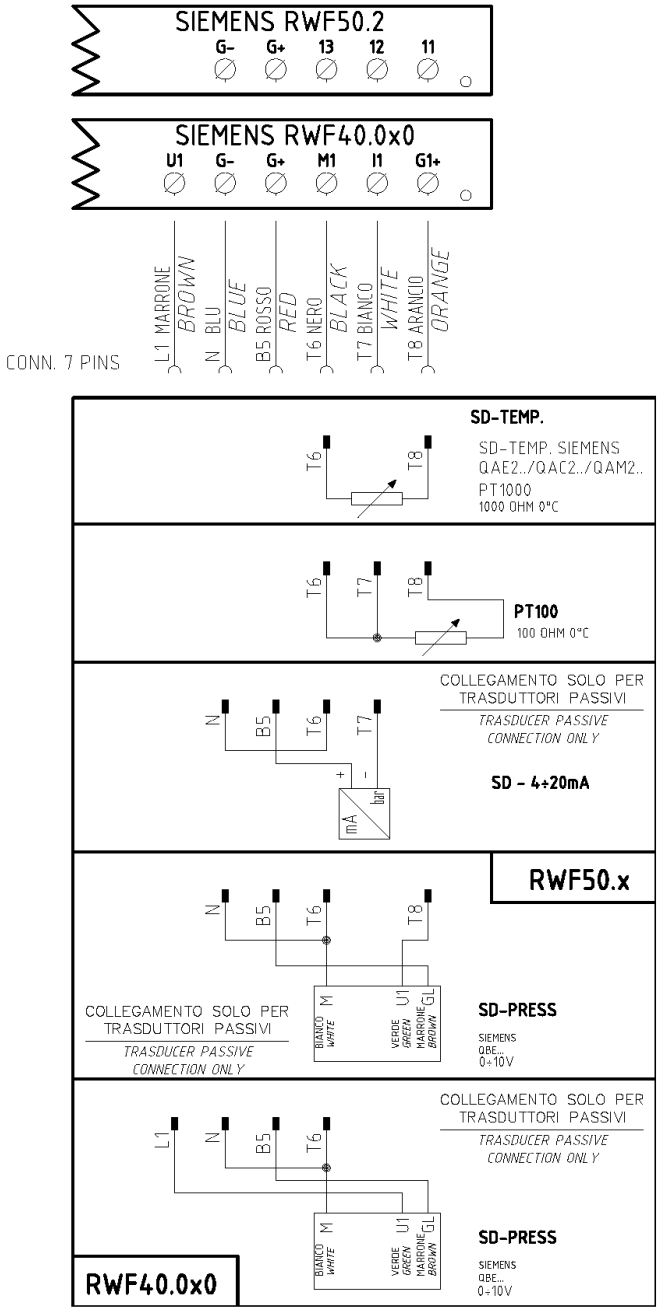


With terminals version

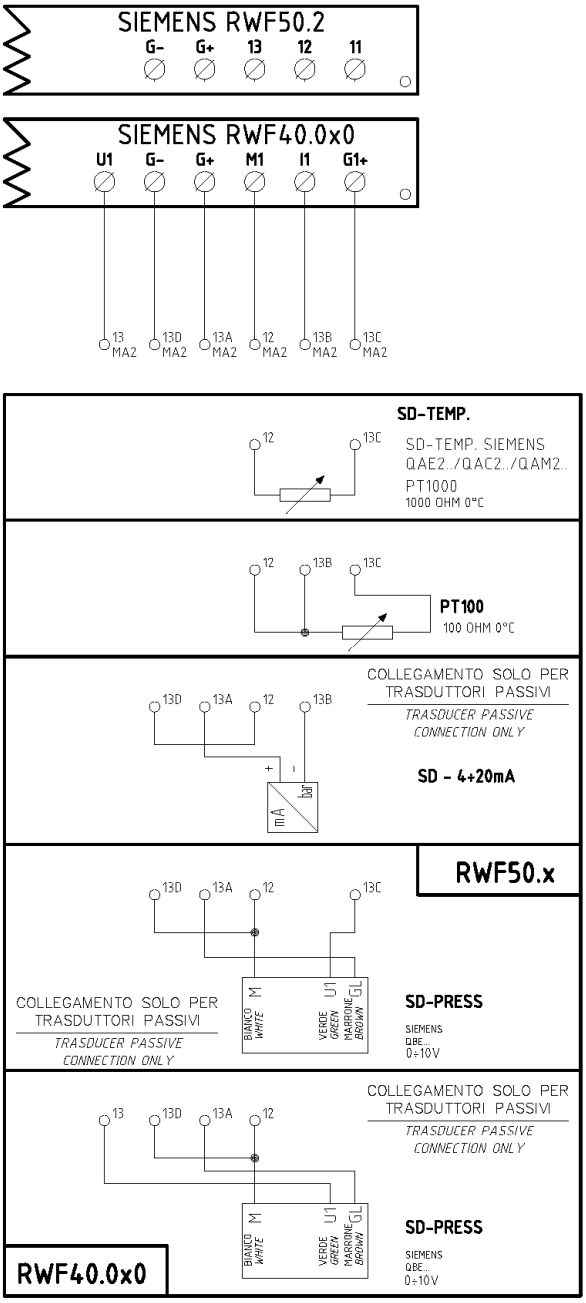


Matches terminals between RWF50.2 and RWF40.0x0

**Parameters summarising for RWF50.2x:**

| Navigation menù | Conf | | | | | Conf | | | | | | | | | |
|---|---|---|---|---|---|---|---|---|---|---|---|---|---|---|---|
| | Inp | | | | | | | | | | | | | | |
| | Inp1 | | | | | Cntr | | diSP | PArA | | | | | | Opr |
| **Types of probe** | **SEn1** | **OFF1** | **SCL1** | **SCH1** | **Unit** | **SPL** | **SPH** | **dECP** | **Pb. 1** | **dt** | **rt** | **tt** | **HYS1 (*)** | **HYS3 (*)** | **SP1 (*)** |
| Siemens QAE2120… | 6 | 0 | needless | needless | 1 | 30 | 95 | 1 | 10 | 80 | 350 | (#) | -5 | 5 | 80 °C |
| Siemens QAM2120.. | 6 | 0 | needless | needless | 1 | 0 | 80 | 1 | 10 | 80 | 350 | (#) | -2,5 | 2,5 | 40°C |
| Pt1000 (130°C max.) | 4 | 0 | needless | needless | 1 | 30 | 95 | 1 | 10 | 80 | 350 | (#) | -5 | 5 | 80°C |
| Pt1000 (350°C max.) | 4 | 0 | needless | needless | 1 | 0 | 350 | 1 | 10 | 80 | 350 | (#) | -5 | 10 | 80°C |
| Pt100 (130°C max.) | 1 | 0 | needless | needless | 1 | 0 | 95 | 1 | 10 | 80 | 350 | (#) | -5 | 5 | 80°C |
| Pt100 (350°C max) | 1 | 0 | needless | needless | 1 | 0 | 350 | 1 | 10 | 80 | 350 | (#) | -5 | 10 | 80°C |
| Probe 4÷20mA / 0÷1,6bar | 16 | 0 | 0 | 160 | needless | 0 | 160 | 0 | 5 | 20 | 80 | (#) | 0 | 20 | 100 kPa |
| Probe 4÷20mA / 0÷3bar | 16 | 0 | 0 | 300 | needless | 0 | 300 | 0 | 5 | 20 | 80 | (#) | 0 | 20 | 200 kPa |
| Probe 4÷20mA / 0÷10bar | 16 | 0 | 0 | 1000 | needless | 0 | 1000 | 0 | 5 | 20 | 80 | (#) | 0 | 50 | 600 kPa |
| Probe 4÷20mA / 0÷16bar | 16 | 0 | 0 | 1600 | needless | 0 | 1600 | 0 | 5 | 20 | 80 | (#) | 0 | 80 | 600 kPa |
| Probe 4÷20mA / 0÷25bar | 16 | 0 | 0 | 2500 | needless | 0 | 2500 | 0 | 5 | 20 | 80 | (#) | 0 | 125 | 600 kPa |
| Probe 4÷20mA / 0÷40bar | 16 | 0 | 0 | 4000 | needless | 0 | 4000 | 0 | 5 | 20 | 80 | (#) | 0 | 200 | 600 kPa |
| Siemens QBE2002 P4 | 17 | 0 | 0 | 400 | needless | 0 | 400 | 0 | 5 | 20 | 80 | (#) | 0 | 20 | 200 kPa |
| Siemens QBE2002 P10 | 17 | 0 | 0 | 1000 | needless | 0 | 1000 | 0 | 5 | 20 | 80 | (#) | 0 | 50 | 600 kPa |
| Siemens QBE2002 P16 | 17 | 0 | 0 | 1600 | needless | 0 | 1600 | 0 | 5 | 20 | 80 | (#) | 0 | 80 | 600 kPa |
| Siemens QBE2002 P25 | 17 | 0 | 0 | 2500 | needless | 0 | 2500 | 0 | 5 | 20 | 80 | (#) | 0 | 125 | 600 kPa |
| Siemens QBE2002 P40 | 17 | 0 | 0 | 4000 | needless | 0 | 4000 | 0 | 5 | 20 | 80 | (#) | 0 | 200 | 600 kPa |
| Segnale 0÷10V | 17 | 0 | to be fixed | to be fixed | needless | to be fixed | to be fixed | to be fixed | 5 | 20 | 80 | (#) | to be fixed | to be fixed | to be fixed |
| Segnale 4÷20mA | 16 | 0 | to be fixed | to be fixed | needless | to be fixed | to be fixed | to be fixed | 5 | 20 | 80 | (#) | to be fixed | to be fixed | to be fixed |

**NOTE** :
(#) tt – servo control run time
SQL33 ; STM30; SQM10; SQM40; SQM50; SQM54 = **30** (secondi) - STA12B3.41; SQN30.251; SQN72.4A4A20 = **12** (secondi)
(*)These values are factory set - values **must be** set during operation at the plant based on the real working temperature/pressure value.
**WARNING :** With pressure probes the parameters SP1, SCH, SCL, HYS1, HYS3 must be selected, and visualized in kPa (kilo Pascal). (1bar = 100.000Pa = 100kPa)

## APPENDIX: PROBES CONNECTION

To assure the utmost comfort, the control system needs reliable information, which can be obtained provided the sensors have been installed correctly. Sensors measure and transmit all variations encountered at their location.

Measurement is taken based on design features (time constant) and according to specific operating conditions.With wiring run in raceways, the sheath (or pipe) containing the wires must be plugged at the sensor's terminal board so that currents of air cannot affect the sensor's measurements.

**Ambient probes (or ambient thermostats)**

**Installation**

The sensors (or room thermostats) must be located in reference rooms in a position where they can take real temperature measurements without being affected by foreign factors.

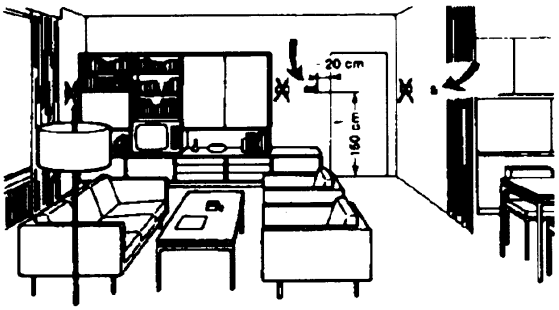


**It's good to be admired …even better to be effective**

Heating systems: the room sensor must not be installed in rooms with heating units complete with thermostatic valves. Avoid all sources of heat foreign to the system.

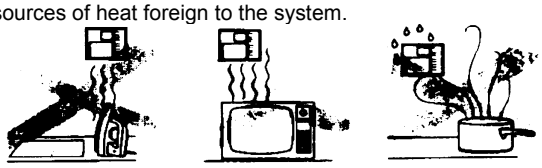

**Location**

On an inner wall on the other side of the room to heating unitsheight above floor 1.5 m, at least 1.5 m away from external sources of heat (or cold).

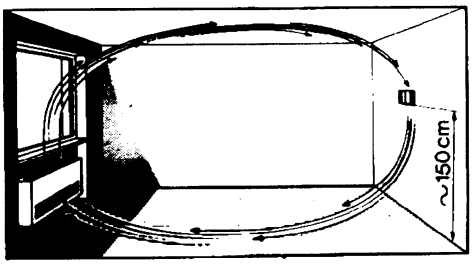


**Installation position to be avoided**

near shelving or alcoves and recesses, near doors or win-dows, inside outer walls exposed to solar radiation or currents of cold air, on inner walls with heating system pipes, domestic hot water pipes, or cooling system pipes running through them.

**Outside probes (weather)**

**Installation**

In heating or air-conditioning systems featuring adjustment in response to outside temperature, the sensor's positioning is of paramount importance.

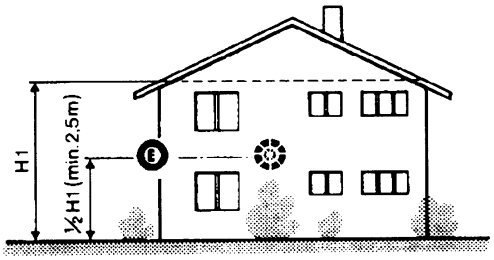


**General rule:** on the outer wall of the building where the living rooms are, never on the south-facing wall or in a position where they will be affected by morning sun. If in any doubt, place them on the north or north-east façade.

**Positions to be avoided**

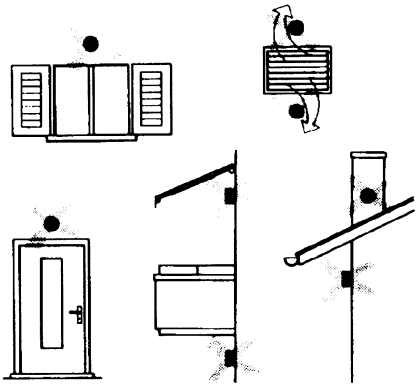

Avoid installing near windows, vents, outside the boiler room, on chimney breasts or where they are protected by balconies, cantilever roofs.

**The sensor must not be painted (measurement error).**

**Duct or pipe sensors**

**Installing temperature sensors**

For measuring outlet air:

- after delivery fan or
- after coil to be controlled, at a distance of at least 0,5 m

For measuring room temperature:

- before return air intake fan and near room's return airintake. For measuring saturation temperature: after mist eliminator.

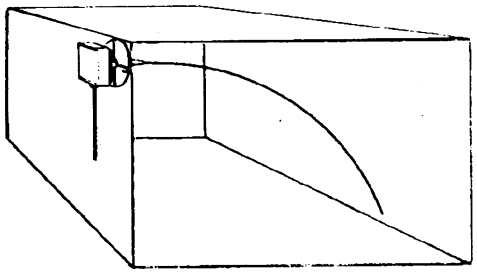

Bend 0.4m sensor by hand (never use tools) as illustrated.

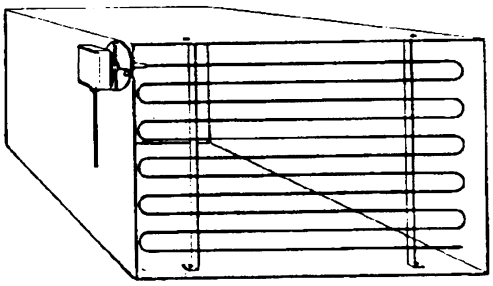

Use whole cross-section of duct, min. distance from walls 50 mm, radius of curvature 10 mm for 2m or 6m sensors.

**Installing combined humidity sensors**

As max. humidity limit sensor on outlet (steam humidifiers).

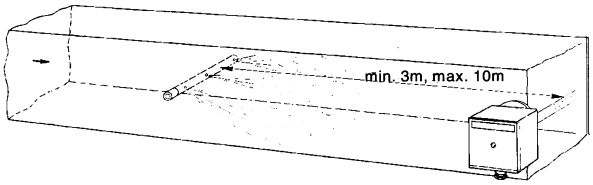


**Installing pressure sensors**

A - installation on ducts carrying fluids at max. temperature 80°C

B - installation on ducts at temperature over 80°C and for refrigerants

C - installation on ducts at high temperatures:

- increase length of siphon
- place sensor at side to prevent it being hit by hot air coming from the pipe.

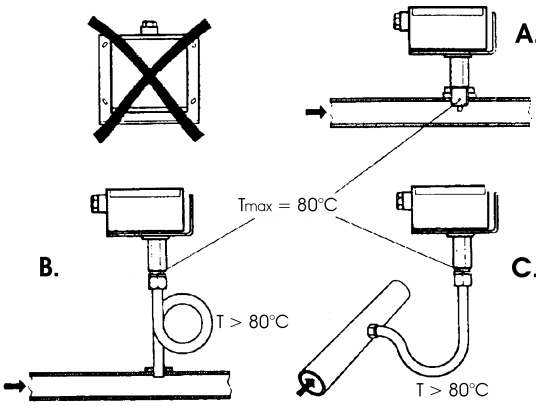


**Installing differential pressure sensors for water**

- Installation with casing facing down not allowed.-With temperature over 80°C, siphons are needed.
- To avoid damaging the sensor, you must comply with the following instructions

**when installing:**

- make sure pressure difference is not greater than thevalue permitted by the sensor
- when there are high static pressures, make sure you insert shutoff valves A-B-C.

**Putting into operation**

Start disable

1=open C1=open C

2=open A2=close B

3=open B3=close A

4= close C

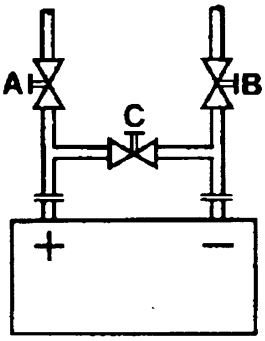

**Immersion or strap-on sensors**

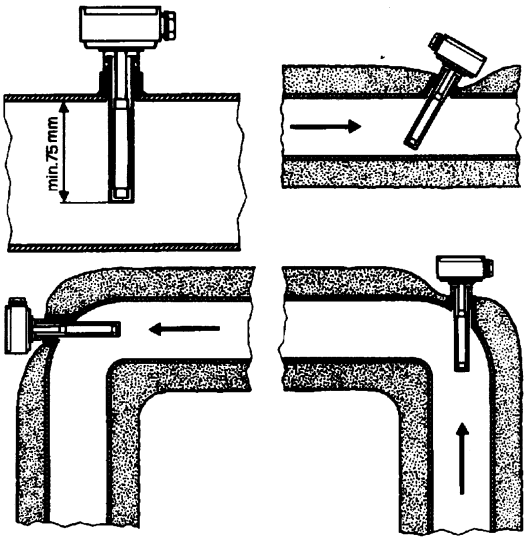


**Immersion probes installation**

Sensors must be installed on the stretch of pipe in which fluid circulates all the time.

The rigid stem (sensing element doing the measuring) must be inserted by at least 75mm and must face the direction of flow.

Recommended locations: on a bend or on a straight stretch of pipe but tilted by 45° and against the flow of fluid.

Protect them to prevent water from infiltrating (dripping gates, condensation from pipes etc.)

**Installing QAD2.. strap-on sensors**

Make sure fluid is circulating in the chosen location.

Eliminate insulation and paintwork (including rust inhibitor) on a min. 100mm length of pipe.

Sensors come with straps for pipes up to 100 mm in diameter

**Placing the probes (QAD22.../QAE21.../QAP21.../RCA...)**

**With pumps on outlet**

**with 3 ways valves / with 4 ways valves**

**Panel system / burner control**

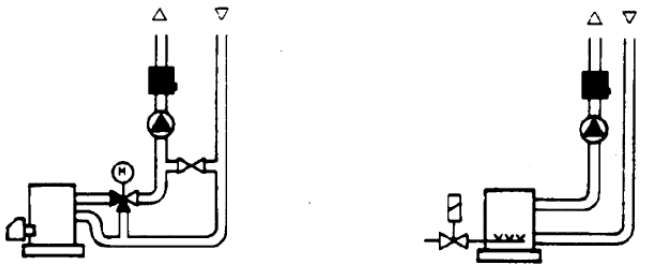

**With pumps on return**

**with 3 ways valves / with 4 ways valves**

**Strap-on or immersion sensors?**

**QAD2.. strap-on sensors**

Advantages :

- 10 sec. time constant
- Installed with system running (no plumbing work)
- Installation can be changed easily if it proves incorrect.

Limits:

- Suitable for pipe diameters max. 100 mm
- Can be affected by currents of air etc.

**QAE2... immersion sensors**

Advantages:

- Measure "mean" fluid temperature
- No external influence on measurement such as: currents of air, nearby pipes etc.

Limits:

- Time constant with sheath: 20 sec.
- Hard to change installation position if it proves incorrect.

**Installing differential pressure probes for air**

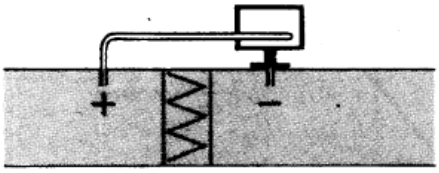


**A - Control a filter (clogging)**

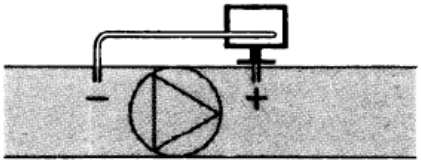


**B - Control a fan (upstream/downstream)**

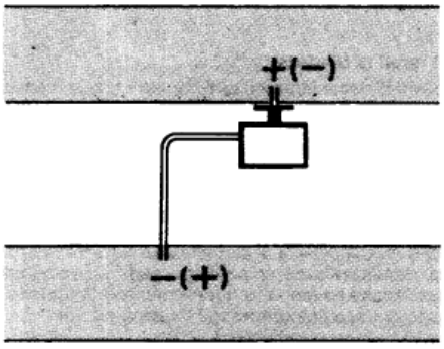


**C - Measurement of difference in pressure between two ducts**

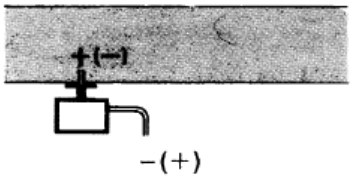


**D - Measurement of difference in pressure between two rooms or of inside of duct and outside**

**Basic principles**

**Measuring static pressure(i.e. pressure exerted by air on pipe walls)**

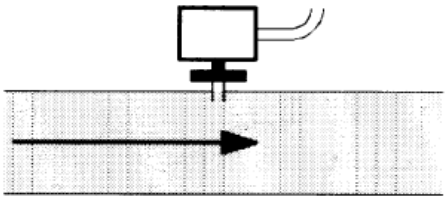

**Measuring dinamic pressure**

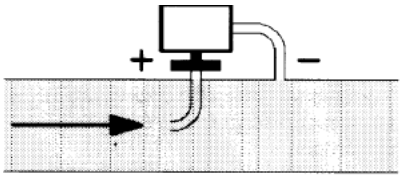


$$Pd = \frac{y\,\vartheta^2}{2g}$$

**Key**

| | |
|---|---|
| y | $Kg/m^3$, specific weight of air |
| □ | m/s, air speed |
| g | 9.81 $m/s^2$ gravity acceleration |
| Pd | mm C.A., dynamic pressure |

**Measuring total pressure**

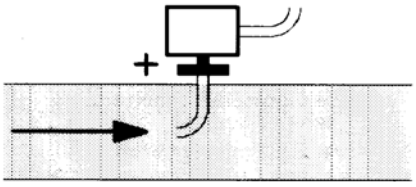

**Spare parts**

| Description | Code |
|---|---|
| Modulator  RWF50.2 (uscita a 3 punti - apri, fermo, chiudi) | 2570148 |
| Modulator  RWF50.3 (uscita continua 0÷20mA, 4÷20mA, 0÷10V) | 2570149 |
| Temperature probe Siemens QAE2120.010A (30÷130°C) | 2560101 |
| Temperature probe Siemens QAM2120.040 (-15÷+50°C) | 2560135 |
| Thermoresistor Pt1000 ø6mm L100mm (30÷130°C) | 2560188 |
| Thermoresistor Pt1000 ø10mm L200mm (0÷350°C) | 2560103 |
| Thermoresistor Pt100 ø10mm L200mm (0÷350°C) | 2560145 |
| Thermoresistor Pt100 ø8mm L85mm (0÷120°C) | 25601C3 |
| Pressure probe Siemens QBE2.. P4 (0÷4bar) | 2560159 |
| Pressure probe Siemens QBE2.. P10 (0÷10bar / signal 0÷10V) | 2560160 |
| Pressure probe Siemens QBE2.. P16 (0÷16bar / signal 0÷10V) | 2560167 |
| Pressure probe Siemens QBE2.. P25 (0÷25bar / signal 0÷10V) | 2560161 |
| Pressure probe Siemens QBE2.. P40 (0÷40bar / signal 0÷10V) | 2560162 |
| Pressure probe Danfoss MBS 3200 P 1,6 (0÷1,6bar / signal 4÷20mA) | 2560189 |
| Pressure probe Danfoss MBS 3200 P 10 (0÷10bar / signal 4÷20mA) | 2560190 |
| Pressure probe Danfoss MBS 3200 P 16 (0÷16bar / signal 4÷20mA) | 2560191 |
| Pressure probe Danfoss MBS 3200 P 25 (0÷25bar / signal 4÷20mA) | 2560192 |
| Pressure probe Danfoss MBS 3200 P 40 (0÷40bar / signal 4÷20mA) | 2560193 |
| Pressure probe Siemens 7MF1565-3BB00-1AA1 (0÷1,6bar / signal 4÷20mA) | 25601A3 |
| Pressure probe Siemens 7MF1565-3CA00-1AA1 (0÷10bar / signal 4÷20mA) | 25601A4 |
| Sonda di pressione Siemens 7MF1565-3CB00-1AA1 (0÷16bar / signal | 25601A5 |
| Pressure probe Siemens 7MF1565-3CD00-1AA1 (0÷25bar / signal 4÷20mA) | 25601A6 |
| Pressure probe Siemens 7MF1565-3CE00-1AA1 (0÷40bar / signal 4÷20mA) | 25601A7 |
| Pressure probe Gefran E3E B1V6 MV (0÷1,6bar / segnale 4÷20mA) | 25601C4 |
| Pressure probe Danfoss E3E B01D MV (0÷10bar / segnale 4÷20mA) | 25601C5 |
| Pressure probe Danfoss E3E B16U MV (0÷16bar / segnale 4÷20mA) | 25601C6 |
| Pressure probe Danfoss E3E B25U MV (0÷25bar / segnale 4÷20mA) | 25601C7 |
| Pressure probe Danfoss E3E B04D MV (0÷40bar / segnale 4÷20mA)) | 25601C8 |

Note: Specifications and data subject to change. Errors and omissions excepted.

# KM3 Modulator

**USER MANUAL**

M12927CA Rel.1.0 10/2020

## MOUNTING

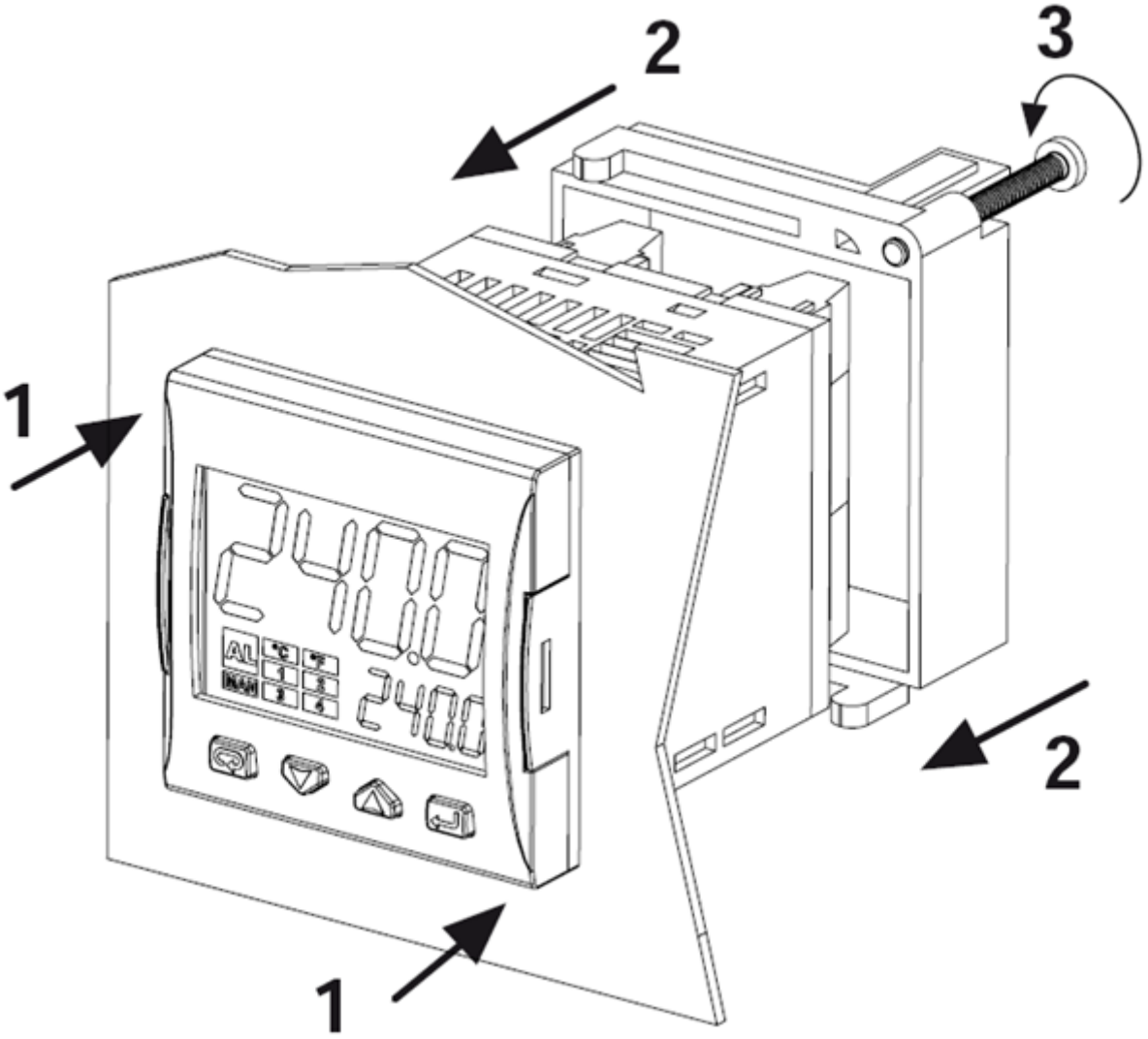

## DISPLAY AND KEYS

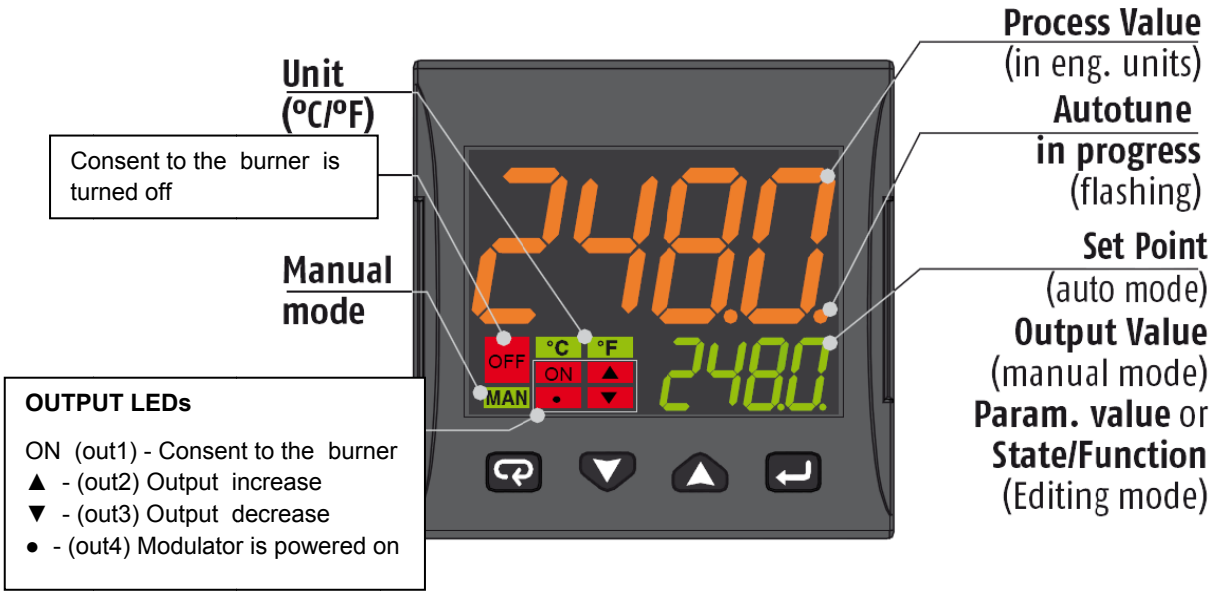


| | Operator Mode | Editing Mode |
|---|---|---|
| ↵ | Access to:<br>- Operator Commands<br>(Timer, Setpoint selection ...)<br>- Parameters<br>- Configuration | Confirm and go to<br>Next parameter |
| ▲ | Access to:<br>- Operator additional information<br>(Output value, running time ...) | Increase the displayed value or select the next element of the parameters list |
| ▼ | Access to:<br>- Set Point | Decrease the displayed value or select the previous element |
| ↻ | Programmable key:<br>Start the programmed function<br>(Autotune, Auto/Man, Timer ...) | Exit from Operator commands/Parameter setting/Configuration |

## CONNECTIONS DIAGRAM

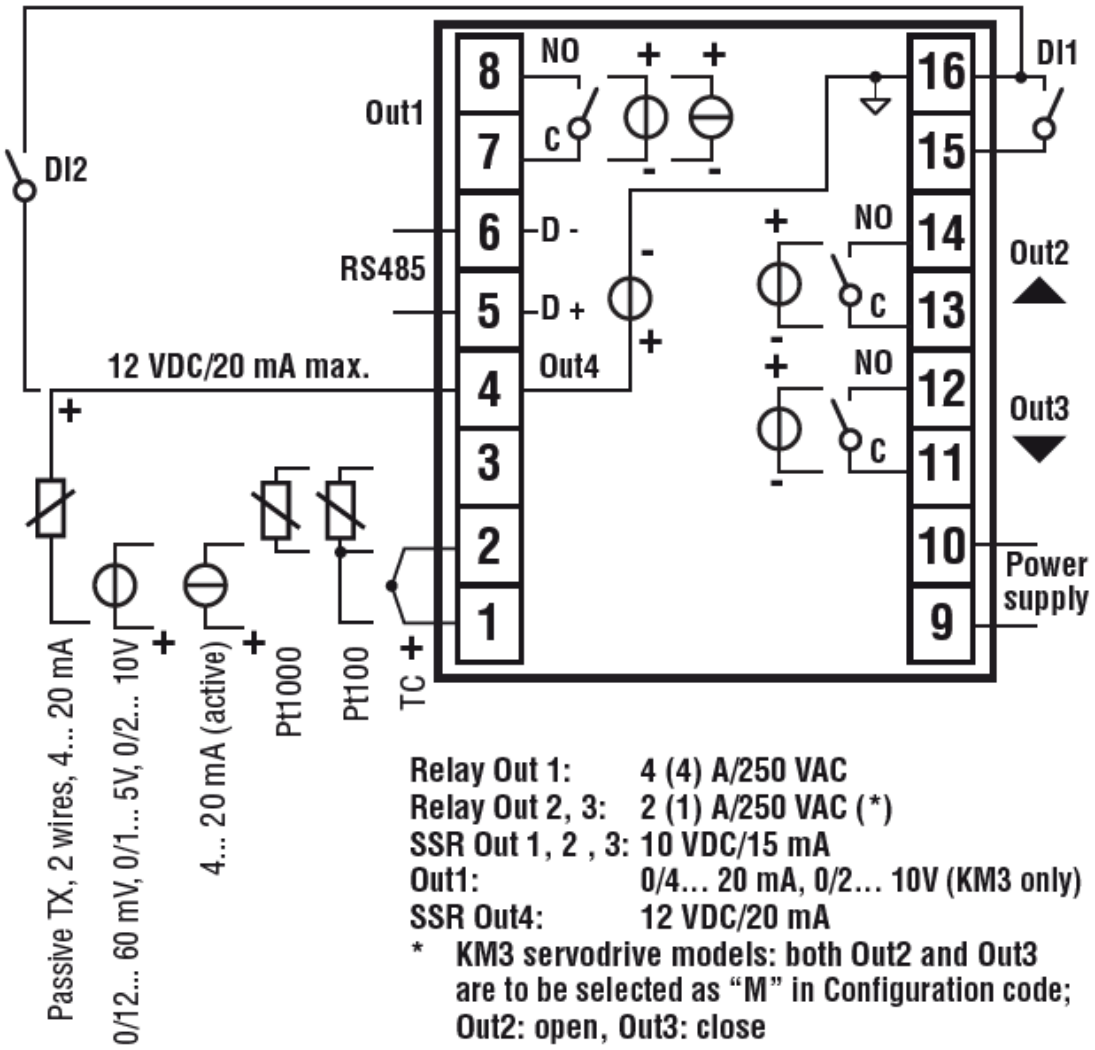


### *Probe connection:*

- **PT1000/NTC/PTC**: between terminal 3 and 2
- **PT 100**: between terminal 3 and 2 with terminal 1
- **Passive pressure probe** 0/4-20 mA: between terminal 4 ( + ) e 1 ( - )
  Note: out4 must be activated ( IO4F must be setted to ON )
- **Powered pressure probe** 0/4-20 mA between terminal 4 (power supply), 2 ( negative) e 1 (positive)
  Note: set IO4F to ON to activate Out4

### *Power supply connection:*

- **Neutral wire:** terminal 9
- **Phase:** terminal 10 ( 100…240 Vac )
- Close terminals 15-16 to switch to the set point 2

### *Output connection:*

- **Channel 1:** terminal 7 and 8 ( burner on – off )
- **Channel 2:** terminal 11 and 12 (servomotor opens)
- **Channel 3:** terminal 13 and 14 (servomotor closes)

## SETPOINT AND HYSTERESIS CONFIGURATION (SP, AL1, HAL1 parameters)

Push the ↵ button to enter into the setpoint configuration:

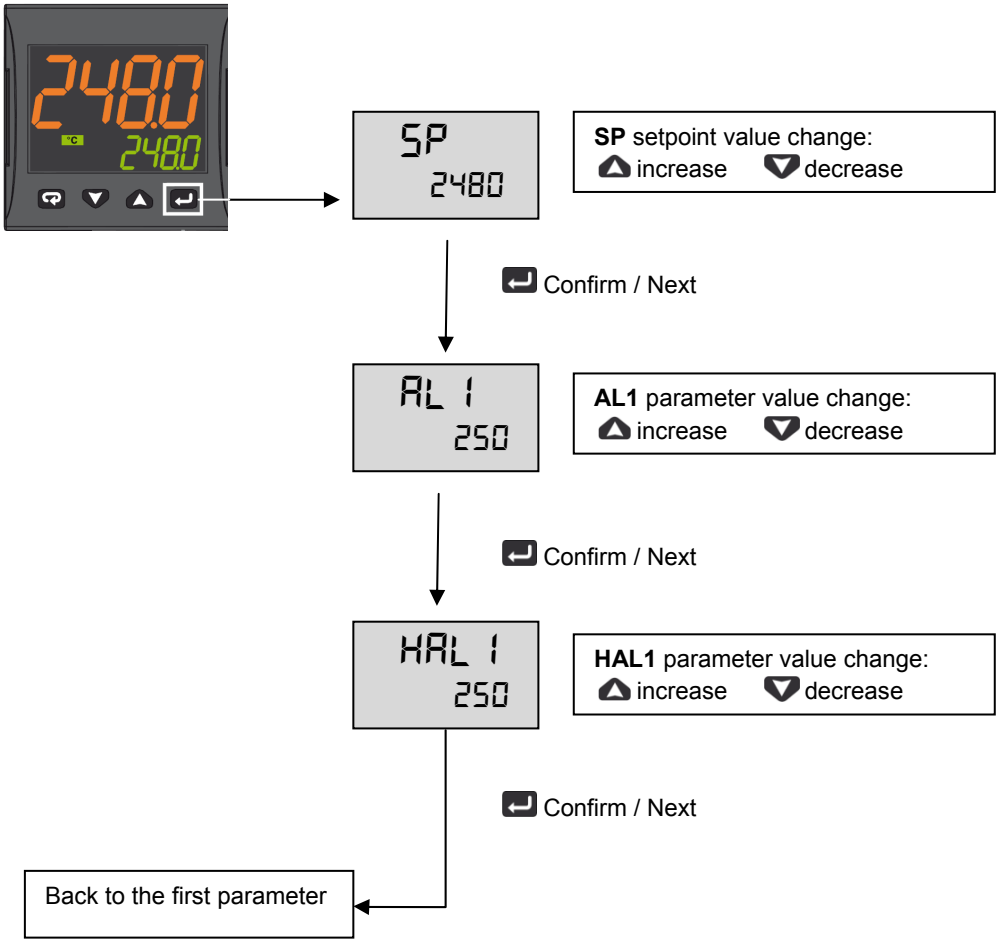


To return to normal mode, press the key for 3 seconds or wait the 10s timeout

### *Operation example*

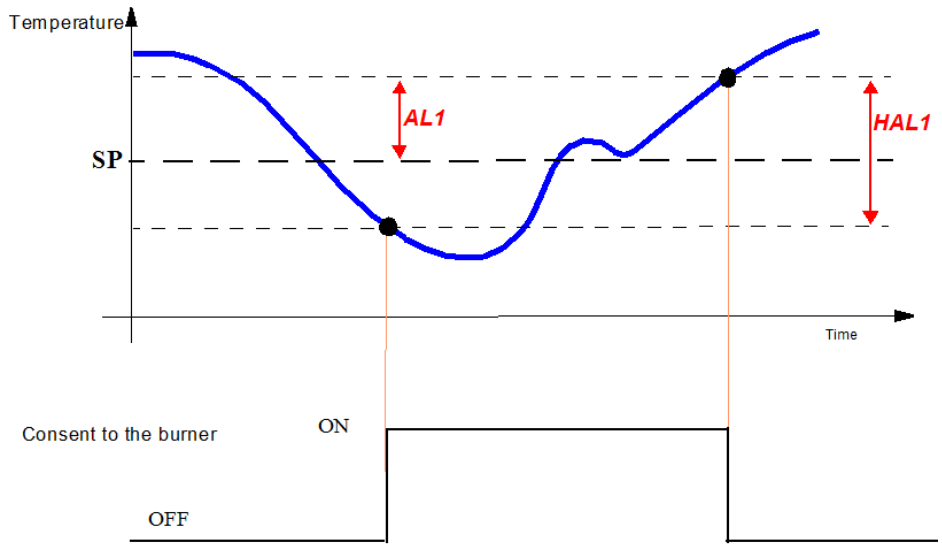

## LIMITED ACCESS LEVEL

Proceed as follows to change some parameters that are not visible in standard user mode:

Press the ↵ key for 3 seconds

Password = 20

Access to parameter:

| | |
|---|---|
| ▲ | Increase the displayed value |
| ▼ | Decrease the displayed value |
| ↵ | Confirm and go to next parameter |

| Param | Description | Values | Default |
|---|---|---|---|
| SEnS | Input type | Pt1 = RTD Pt100<br>Pt10 = RTD Pt1000<br>0.20 = 0..20mA<br>4.20 = 4..20mA Pressure probe<br>0.10 = 0..10V<br>2.10 = 2..10V<br>crAL= Thermocouple K | Depends on the probe |
| SP | Set point 1 | SPLL ... SPLH | See page 7 |
| AL1 | AL1 threshold | AL1L... AL1H (E.U.) | |
| HAL1 | AL1 hysteresis | 1... 9999 (E.U.) | |
| Pb | Proportional band | 1... 9999 (E.U.) | |
| ti | Integral time | 0 (oFF) ... 9999 (s) | |
| td | Derivative time | 0 (oFF) ... 9999 (s) | |
| Str.t | Servomotor stroke time | 5...1000 seconds | |
| db.S | Servomotor dead band | 0...100% | |
| SPLL | Minimum set point value | -1999 ... SPHL | |
| SPHL | Maximum set point value | SPLL ... 9999 | |
| dp | Decimal point position | 0... 3 | |
| SP 2 | Set point 2 | SPLL...SPLH | 60 |
| A.SP | Selection of the active set point | "SP" ... " nSP" | SP |

To exit the parameter setting procedure press the key (for 3 s) or wait until the timeout expiration (about 30 seconds)

## Probe parameters configuration MODULATORE ASCON KM3

| Parameter Group | inP | | | | | | AL1 | | rEG | | | | | SP | | |
|---|---|---|---|---|---|---|---|---|---|---|---|---|---|---|---|---|
| **Parameter** | **Sens** | **dp** | **SSC** | **FSc** | **unit** | **IO4.F (**)** | **AL1 (***)** | **HAL1 (***)** | **Pb (***)** | **ti (***)** | **td (***)** | **Str.t** | **db.S** | **SPLL** | **SPHL** | **SP (***)** |
| Probes | | Dec Point | Scale Min | Scale Max | | | Off | On | p | i | d | servo time s | Band Mo. | SP Min | SP Max | Set point |
| Pt1000 (130°C max) | Pt10 | 1 | | | °C | on | 5 | 10 | 10 | 350 | 1 | * | 5 | 30 | 95 | 80 |
| Pt1000 ( 350°C max) | PT10 | 1 | | | °C | on | 10 | 10 | 10 | 350 | 1 | * | 5 | 0 | 350 | 80 |
| Pt100 (130°C max) | PT1 | 1 | | | °C | on | 5 | 10 | 10 | 350 | 1 | * | 5 | 0 | 95 | 80 |
| Pt100 (350°C max) | Pt1 | 1 | | | °C | on | 10 | 10 | 10 | 350 | 1 | * | 5 | 0 | 350 | 80 |
| Pt100 (0÷100°C 4÷20mA) | 4.20 | 1 | 0 | 100 | | on | 5 | 10 | 10 | 350 | 1 | * | 5 | 0 | 95 | 80 |
| Thermocouple K (1200°C max) | crAL | 0 | | | °C | on | 20 | 25 | 10 | 350 | 1 | * | 5 | 0 | 1200 | 80 |
| Thermocouple J (1000°C max) | J | 0 | | | °C | on | 20 | 25 | 10 | 350 | 1 | * | 5 | 0 | 1000 | 80 |
| 4-20mA / 0-1,6barPressure probe | 4.20 | 0 | 0 | 160 | | on | 20 | 20 | 5 | 120 | 1 | * | 5 | 0 | 160 | 100 |
| 4-20mA / 0-10bar Pressure probe | 4.20 | 0 | 0 | 1000 | | on | 50 | 50 | 5 | 120 | 1 | * | 5 | 0 | 1000 | 600 |
| 4-20mA / 0-16bar Pressure probe | 4.20 | 0 | 0 | 1600 | | on | 80 | 80 | 5 | 120 | 1 | * | 5 | 0 | 1600 | 600 |
| 4-20mA / 0-25bar Pressure probe | 4.20 | 0 | 0 | 2500 | | on | 125 | 125 | 5 | 120 | 1 | * | 5 | 0 | 2500 | 600 |
| 4-20mA / 0-40bar Pressure probe | 4.20 | 0 | 0 | 4000 | | on | 200 | 200 | 5 | 120 | 1 | * | 5 | 0 | 4000 | 600 |
| QBE2002 / 0-25bar Pressure probe | 0.10 | 0 | 0 | 2500 | | 0n | 125 | 125 | 5 | 120 | 1 | * | 5 | 0 | 2500 | 600 |

Note:

(*) Str.t - Servomotor stroke time
SQL33; STM30; SQM10; SQM40; SQM50; SQM54 = 30 (Seconds)
STA12B3.41; SQN30.251; SQN72.4A4A20 = 12 (Seconds)

**(**) Out 4 … on Display led °4 must be switched on, otherwise change the io4.F parameter value from "on" to "out4", confirm the value, quit the configuration mode then change again the io4.F parameter value from "out4" to "on".**

(***) Factory settings. These values must be adapted to machine conditions

N.B. For pressure probe, SP, SPHL, SPLL parameters values are expressed in Kpa (1 bar = 100 Kpa).

# CONFIGURATION

## *How to access configuration level*

The configuration parameters are collected in various groups. Every group defines all parameters related with a specific function (e.g.: control, alarms, output functions).

1. Push the button for more than 5 seconds. The upper display will show PASS while the lower display will show 0.
2. Using and buttons set the programmed password.
   According to the entered password, it is possible to see a part of the parameters listed in the "configuration parameters" section.
   a. Enter "**30**" as password to view all the configuration parameters
   b. Enter "**20**" as password to view the parameters of the "limited access level". At this point, only the parameters with attribute **Liv = A** or **Liv = O** will be editable.
   c. Leave the password blank to edit "user level" parameters, that are identified by attribute **Liv = O**
3. Push the button. If the password is correct the display will show the acronym of the first parameter group preceded by the symbol: . In other words the upper display will show: inP (group of the **Input parameters**).

The instrument is in configuration mode. To press for more than 5 seconds, the instrument will return to the "standard display.

**Keyboard functions during parameter changing:**

| | **Operator Mode** |
|---|---|
| | When the upper display is showing a group and the lower display is blank, this key allows to enter in the selected group. When the upper display is showing a parameter and the lower display is showing its value, this key allows to store the selected value for the current parameter and access the next parameter within the same group. |
| | Allows to increase the value of the selected parameter. |
| | Allows to decrease the value of the selected parameter. |
| | Short presses allow you to exit the current group of parameters and select a new group. A long press terminates the configuration procedure (the instrument returns to the normal display). |
| + | These two keys allow to return to the previous group. Proceed as follows:<br>Push the button and maintaining the pressure, then push the ; release both the buttons. |

## *Configuration Parameters*

| **inP GROUP - input confiuration** | | | | | |
|---|---|---|---|---|---|
| **Liv** | **N°** | **Param** | **Description** | **Values** | **Default** |
| A | 1 | SEnS | Input type | Pt1 = RTD Pt100<br>Pt10 = RTD Pt1000<br>0.20 = 0..20mA<br>4.20 = 4..20mA Pressure probe<br>0.10 = 0..10V<br>2.10 = 2..10V<br>crAL= Thermocouple K | Depends on the probe |
| A | 2 | dp | Decimal point position | 0... 3 | See page 7 |
| A | 3 | SSc | Initial scale read-out for linear inputs (avaiable only if SEnS parameter is not equal to Pt1, Pt10, crAL values) | -1999... 9999 | 0 |
| C | 4 | FSc | Full scale read-out for linear input inputs (avaiable only if SEnS parameter is not equal to Pt1, Pt10, crAL values) | -1999... 9999 | Depends on the probe |
| C | 5 | unit | Unit of measure<br>(present only in the case of temperature probe) | °C/°F | °C |
| C | 6 | Fil | Digital filter on the measured value | 0 (= OFF)... 20.0 s | 1.0 |
| C | 7 | inE | Selection of the Sensor Out of Range type that will enable the safety output value | or = Over range<br>ou = Under range<br>our = over e under range | or |

| | | | | | |
|---|---|---|---|---|---|
| C | 8 | oPE | Safety output value | -100... 100 | 0 |
| C | 9 | io4.F | I/O4 function selection | on = Out4 will be ever ON (used as a transmitter power supply) ,out4 = Uscita 4 (Used as digital output 4), dG2c = Digital input 2 for contact closure, dG2U = Digital input 2 driven by 12... 24 VDC | on |
| C | 10 | diF1 | Digital input 1 function | oFF = Not used,<br>1 = Alarm reset,<br>2 = Alarm acknowledge (ACK),<br>3 = Hold of the measured value,<br>4 = Stand by mode,<br>5 = Manual mode,<br>6 = HEAt with SP1 and CooL with SP2,<br>7 = Timer RUN/Hold/Reset,<br>8 = Timer Run,<br>9 = Timer Reset,<br>10 = Timer Run/Hold,<br>11 = Timer Run/Reset,<br>12 = Timer Run/Reset with lock,<br>13 = Program Start,<br>14 = Program Reset,<br>15 = Program Hold,<br>16 = Program Run/Hold,<br>17 = Program Run/Reset,<br>18 = Sequential SP selection,<br>19 = SP1 - SP2 selection,<br>20 = SP1... SP4 binary selection,<br>21 = Digital inputs in parallel | 19 |
| C | 12 | di.A | Digital Inputs Action<br>(DI2 only if configured) | 0 = DI1 direct action, DI2 direct action<br>1 = DI1 reverse action, DI2 direct action<br>2 = DI1 direct action, DI2 reverse action<br>3 = DI1 reverse action, DI2 reverse action | 0 |

**Out GROUP- Output parameters**

| Liv | N° | Param | Description | Values | Default |
|---|---|---|---|---|---|
| C | 14 | o1F | Out 1 function | AL = Alarm output | AL |
| C | 15 | o1AL | Initial scale value of the analog retransmission | -1999 ... Ao1H | 1 |
| C | 18 | o1Ac | Out 1 action | dir = Direct action<br>rEU = Reverse action<br>dir.r = Direct with reversed LED<br>ReU.r = Reverse with reversed LED | rEUr.r |
| C | 19 | o2F | Out 2 function | H.rEG = Heating output | H.rEG |
| C | 21 | o2Ac | Out 2 action | dir = Direct action<br>rEU = Reverse action<br>dir.r = Direct with reversed LED<br>ReU.r = Reverse with reversed LED | dir |
| C | 22 | o3F | Out 3 function | H.rEG = Heating output | H.rEG |
| C | 24 | o3Ac | Out 3 action | dir = Direct action<br>rEU = Reverse action<br>dir.r = Direct with reversed LED<br>ReU.r = Reverse with reversed LED | dir |

**AL1 GROUP - Alarm 1 parameters**

| Liv | N° | Param | Descrizione | Values | Default |
|---|---|---|---|---|---|
| C | 28 | AL1t | Tipo allarme AL1 | nonE = Alarm not used<br>LoAb = Absolute low alarm<br>HiAb = Absolute high alarm<br>LHAo = Windows alarm in alarm outside the windows<br>LHAI = Windows alarm in alarm inside the | HidE |

| | | | | | |
|---|---|---|---|---|---|
| | | | | windows<br>SE.br = Sensor Break<br>LodE = Deviation low alarm (relative)<br>HidE = Deviation high alarm (relative)<br>LHdo = Relative band alarm in alarm out of the band<br>LHdi = Relative band alarm in alarm inside the band | |
| C | 29 | Ab1 | Alarm 1 function | 0... 15<br>+1 = Not active at power up<br>+2 = Latched alarm (manual reset)<br>+4 = Acknowledgeable alarm<br>+8 = Relative alarm not active at set point change | 0 |
| C | 30 | AL1L | -- For High and low alarms, it is the low limit of the AL1 threshold;<br>-- For band alarm, it is low alarm threshold | -1999... AL1H (E.U.) | -199.9 |
| C | 31 | AL1H | -- For High and low alarms, it is the high limit of the AL1 threshold;<br>-- For band alarm, it is high alarm threshold | AL1L... 9999 (E.U.) | 999.9 |
| O | 32 | AL1 | AL1 threshold | AL1L... AL1H (E.U.) | See page 7 |
| O | 33 | HAL1 | AL1 hysteresis | 1... 9999 (E.U.) | See page 7 |
| C | 34 | AL1d | AL1 delay | 0 (oFF)... 9999 (s) | oFF |
| C | 35 | AL1o | Alarm 1 enabling during Stand-by mode and out of range conditions | 0 = Alarm 1 disabled during Stand by and out of range<br>1 = Alarm 1 enabled in stand by mode<br>2 = Alarm 1 enabled in out of range condition<br>3 = Alarm 1 enabled in stand by mode and in overrange<br>condition | 1 |

**GRUPPO AL2 - parametri allarme 2**

| Liv | N° | Param | Description | Values | Default |
|---|---|---|---|---|---|
| C | 36 | AL2t | Alarm 2 type | nonE = Alarm not used<br>LoAb = Absolute low alarm<br>HiAb = Absolute high alarm<br>LHAo = Windows alarm in alarm outside the windows<br>LHAI = Windows alarm in alarm inside the windows<br>SE.br = Sensor Break<br>LodE = Deviation low alarm (relative)<br>HidE = Deviation high alarm (relative)<br>LHdo = Relative band alarm in alarm out of the band<br>LHdi = Relative band alarm in alarm inside the band | SE.br |
| C | 37 | Ab2 | Alarm 2 function | 0... 15<br>+1 = Not active at power up<br>+2 = Latched alarm (manual reset)<br>+4 = Acknowledgeable alarm<br>+8 = Relative alarm not active at set point change | 0 |
| C | 42 | AL2d | AL2 hysteresis | 0 (oFF)... 9999 (s) | oFF |
| C | 43 | AL2o | Alarm 2 enabling during Stand-by mode and out of range conditions | 0 = Alarm 2 disabled during Stand by and out of range<br>1 = Alarm 2 enabled in stand by mode<br>2 = Alarm 2 enabled in out of range condition<br>3 = Alarm 2 enabled in stand by mode and in overrange<br>condition | 0 |

| AL3 Group - alarm 3 parameters | | | | | |
|---|---|---|---|---|---|
| **Liv** | **N°** | **Param** | **Description** | **Values** | **Default** |
| | 44 | AL3t | Alarm 3 type | nonE = Alarm not used<br>LoAb = Absolute low alarm<br>HiAb = Absolute high alarm<br>LHAo = Windows alarm in alarm outside the windows<br>LHAI = Windows alarm in alarm inside the windows<br>SE.br = Sensor Break<br>LodE = Deviation low alarm (relative)<br>HidE = Deviation high alarm (relative)<br>LHdo = Relative band alarm in alarm out of the band<br>LHdi = Relative band alarm in alarm inside the band | nonE |

| LbA Group - Loop break alarm | | | | | |
|---|---|---|---|---|---|
| **Liv** | **N°** | **Param** | **Descrizione** | **Values** | **Default** |
| C | 52 | LbAt | LBA time | Da 0 (oFF) a 9999 (s) | oFF |

| rEG Group - Control parameters | | | | | |
|---|---|---|---|---|---|
| **Liv** | **N°** | **Param** | **Description** | **Values** | **Default** |
| C | 56 | cont | Control type | Pid = PID (heat and/or)<br>On.FA = ON/OFF asymmetric hysteresis<br>On.FS = ON/OFF symmetric hysteresis<br>nr = Heat/Cool ON/OFF control with neutral zone<br>3Pt = Servomotor control (available only when Output 2 and<br>Output 3 have been ordered as “M”) | 3pt |
| C | 57 | Auto | Autotuning selection | -4 = Oscillating auto-tune with automaticrestart at power up and after all point change<br>-3 = Oscillating auto-tune with manual start<br>-2 = Oscillating -tune with auto-matic start at the first power up only<br>-1 = Oscillating auto-tune with auto-matic restart at every power up<br>0 = Not used<br>1 = Fast auto tuning with automatic restart at every power up<br>2 = Fast auto-tune with automatic start the first power up only<br>3 = FAST auto-tune with manual start<br>4 = FAST auto-tune with automatic restart at power up and<br>after set point change<br>5 = Evo-tune with automatic restart at every power up<br>6 = Evo-tune with automatic start the first power up only<br>7 = Evo-tune with manual start<br>8 = Evo-tune with automatic restart at power up and after a set point change | 7 |
| C | 58 | tunE | Manual start of the Autotuning | oFF = Not active<br>on = Active | oFF |

| | | | | | |
|---|---|---|---|---|---|
| C | 59 | SELF | Self tuning enabling | no = The instrument does not perform the self-tuning<br>YES = The instrument is performing the self-tuning | No |
| A | 62 | Pb | Proportional band | 1... 9999 (E.U.) | See page 7 |
| A | 63 | ti | Integral time | 0 (oFF) ... 9999 (s) | See page 7 |
| A | 64 | td | Derivative time | 0 (oFF) ... 9999 (s) | See page 7 |
| C | 65 | Fuoc | Fuzzy overshoot control | 0.00... 2.00 | 1 |
| C | 69 | rS | Manual reset (Integral pre-load) | -100.0... +100.0 (%) | 0.0 |
| A | 70 | Str.t | Servomotor stroke time | 5...1000 seconds | See page 7 |
| A | 71 | db.S | Servomotor dead band | 0...100% | 5 |
| C | 72 | od | Delay at power up | 0.00 (oFF) ... 99.59 (hh.mm) | oFF |

**SP Group - Set point parameters**

| Liv | N° | Param | Description | Values | Default |
|---|---|---|---|---|---|
| C | 76 | nSP | Number of used set points | 1... 4 | 2 |
| A | 77 | SPLL | Minimum set point value | -1999 ... SPHL | See page 7 |
| A | 78 | SPHL | Maximum set point value | SPLL ... 9999 | See page 7 |
| O | 79 | SP | Set point 1 | SPLL ... SPLH | See page 7 |
| C | 80 | SP 2 | Set point 2 | SPLL ... SPLH | 60 |
| | 83 | A.SP | Selection of the active set point | "SP" ... " nSP" | SP |
| C | 84 | SP.rt | Remote set point type | RSP = The value coming from serial link is used as remote set point<br>trin = The value will be added to the local set point selected by<br>A.SP and the sum becomes the operative set point<br>PErc = The value will be scaled on the input range and this value will be used as remote SP | trin |
| C | 85 | SPLr | Local/remote set point selection | Loc = Local<br>rEn = Remote | Loc |
| C | 86 | SP.u | Rate of rise for POSITIVE set point change (ramp UP) | 0.01... 99.99 (inF) Eng. units per minute | inF |
| C | 87 | SP.d | Rate of rise for NEGATIVE set point change (ramp DOWN) | 0.01... 99.99 (inF) Eng. units per minute | inF |

**PAn Group - Operator HMI**

| Liv | N° | Param | Description | Values | Default |
|---|---|---|---|---|---|
| C | 118 | PAS2 | Level 2 password (limited access level) | oFF (Level 2 not protected by password)<br>1... 200 | 20 |
| C | 119 | PAS3 | Level 3 password (complete configuration level) | 3... 300 | 30 |
| C | 120 | PAS4 | Password livello (livello configurazione a codice) | 201... 400 | 300 |
| C | 121 | uSrb | button function during RUN TIME | nonE = No function<br>tunE = Auto-tune/self-tune enabling. A single press (longer than 1 second)<br>starts the auto-tune<br>oPLo = Manual mode. The first pressure puts the instrument in manual mode<br>(OPLO) while a second one puts the instrument in Auto mode | tunE |

| | | | | | |
|---|---|---|---|---|---|
| | | | | AAc = Alarm reset<br>ASi = Alarm acknowledge<br>chSP = Sequential set point selection<br>St.by = Stand by mode. The first press puts the instrument in stand by<br>mode while a second one puts the instrument in Auto mode.<br>Str.t = Timer run/hold/reset<br>P.run = Program run<br>P.rES = Program reset<br>P.r.H.r = Program run/hold/reset | |
| C | 122 | diSP | Display management | Spo = Operative set point | SPo |
| C | 123 | di.cL | Display colour | 0 = The display colour is used to show the actual deviation (PV - SP)<br>1 = Display red (fix)<br>2 = Display green (fix)<br>3 = Display orange (fix) | 2 |
| | 125 | diS.t | Display Timeout | -- oFF (display always ON)<br>-- 0.1... 99.59 (mm.ss) | oFF |
| C | 126 | fiLd | Filter on the displayed value | -- oFF (filter disabled)<br>-- From 0.0 (oFF) to 20.0 (E.U.) | oFF |
| C | 128 | dSPu | Instrument status at power ON | AS.Pr = Starts in the same way it was prior to the power down<br>Auto = Starts in Auto mode<br>oP.0 = Starts in manual mode with a power output equal to zero<br>St.bY = Starts in stand-by mode | Auto |
| C | 129 | oPr.E | Operative modes enabling | ALL = All modes will be selectable by the next parameter<br>Au.oP = Auto and manual (OPLO) mode only will be selectable by the next parameter<br>Au.Sb = Auto and Stand-by modes only will be selectable by the next parameter | ALL |
| C | 130 | oPEr | Operative mode selection | If oPr.E = ALL: - Auto = Auto mode<br>- oPLo = Manual mode<br>- St.bY = Stand by mode<br>If oPr.E = Au.oP: - Auto = Auto mode<br>- oPLo = Manual mode<br>If oPr.E = Au.Sb: - Auto = Auto mode<br>- St.bY = Stand by mode | Auto |

**SEr Group - Serial link parameter**

| Liv | N° | Param | Description | Values | Default |
|---|---|---|---|---|---|
| C | 131 | Add | Instrument address | -- oFF<br>-- 1... 254 | 1 |
| C | 132 | bAud | baud rate | 1200 = 1200 baud<br>2400 = 2400 baud<br>9600 = 9600 baud<br>19.2 = 19200 baud<br>38.4 = 38400 baud | 9600 |
| C | 133 | trSP | Selection of the value to be retransmitted (Master) | nonE = Retransmission not used (the instrument is a slave)<br>rSP = The instrument becomes a Master and retransmits the operative set point<br>PErc = The instrument become a Master and it retransmits the power output | nonE |

| con Group - Consumption parameters | | | | | |
|---|---|---|---|---|---|
| **Liv** | **N°** | **Param** | **Description** | **Values** | **Default** |
| C | 134 | Co.tY | Count type | oFF = Not used<br>1 = Instantaneous power (kW)<br>2 = Power consumption (kW/h)<br>3 = Energy used during program execution. This measure starts from<br>zero when a program runs end stops at the end of the program. A<br>new program execution will reset the value<br>4 = Total worked days: number of hours the instrument is turned ON<br>divided by 24.<br>5 = Total worked hours: number of hours the instrument is turned ON.<br>6 = Total worked days with threshold: number of hours the instrument is<br>turned ON divided by 24, the controller is forced in stand-by when<br>Co.ty value reaches the threshold set in [137] h.Job.<br>7 = Total worked hours with threshold: number of hours the instrument<br>is turned ON, the controller is forced in stand-by when Co.ty value<br>reaches the threshold set in [137] h.Job.<br>8 = Totalizer of control relay worked days: number of hours the control<br>relay has been in ON condition, divided by 24.<br>9 = Totalizer of control relay worked hours: number of hours the control<br>relay has been in ON condition.<br>10 = Totalizer of control relay worked days with threshold: number of<br>hours the control relay has been in ON condition divided by 24,<br>the controller is forced in stand-by when Co.ty value reaches the<br>threshold set in [137] h.Job.<br>11 = Totalizer of control relay worked hours with threshold: number of<br>hours the control relay has been in ON condition, the controller is<br>forced in stand-by when Co.ty value reaches the threshold set in<br>[137] h.Job. | oFF |
| C | 138 | t.Job | Worked time (not resettable) | 0... 9999 days | 0 |

| cAL Group - User calibration group | | | | | |
|---|---|---|---|---|---|
| **Liv** | **N°** | **Param** | **Description** | **Values** | **Default** |
| C | 139 | AL.P | Adjust Low Point | From -1999 to (AH.P - 10) in engineering units | 0 |
| C | 140 | AL.o | Adjust Low Offset | -300... +300 (E.U.) | 0 |
| C | 141 | AH.P | Adjust High Point | From (AL.P + 10) to 9999 engineering units | 999.9 |
| C | 142 | AH.o | Adjust High Offset | -300... +300 | 0 |

# OPERATIVE MODES

When the instrument is powered, it starts immediately to work according to the parameters values loaded in its memory. The instrument behaviour and its performance are governed by the value of the stored parameters.

At power ON the instrument can start in one of the following mode depending on its configuration:

**Automatic Mode** In Automatic mode the instrument drives automatically the control output according to the parameter value set and the set point/measured value.

**Manual Mode** (OPLO): In Manual mode the the upper display shows the measured value while the lower display shows the power output The lower display shows the power output [preceded by H (for heating) or C (for cooling)], MAN is lit and the instrument allows you to set manually the control output power. No Automatic action will be made.

**Stand by Mode** (St.bY): In stand-by mode the instrument operates as an indicator. It will show on the upper display the measured value and on the lower display the set point alternately to the “St.bY” messages and forces the control outputs to zero.

We define all the above described conditions as “Standard Display”.

As we have seen, it is always possible to modify the value assigned to a parameter independently from the operative modes selected.

## *AUTOMATIC MODE*

Keyboard function when the instrument is in Auto mode:

| | **Modo Operatore** |
|---|---|
| | Allows entry into parameter modification procedures |
| | Allows you to start the “Direct set point modification” function (see below). |
| | Allows you to display the “additional informations” (see below). |
| | Performs the action programmed by [121] uSrb ( button function during RUN TIME) parameter |

**Additional information**
This instrument is able to show you some additional informations that can help you to manage your system.
The additional informations are related to how the instrument is programmed, hence in many cases, only part of this information is available.

1. When the instrument is showing the “standard display” push button. The lower display will show H or c followed by a number. This value is the current power output applied to the process. The H show you that the action is a Heating action while the "c" show you that the action is a Cooling action
2. Push button again. When the programmer is running the lower display will show the segment currently performed and the Event status as shown below:
   r 1.00 where the first character can be r for a ramp or S for a soak, the next digit show the number of the segment (e.g. S3 means Soak number 3) and the twoless significant digits (LSD) show you the status of the two event (the LSD is the Event 2)..
3. Push button again. When the programmer is running the lower display will show the theoretical remaining time to the end of the program preceded by a "P" letter:
   P84.3
4. Push button again. When the wattmeter function is running the lower display will show U followed by the measured energy..
5. Push button. When the “Worked time count” is running the lower display will show "d" for days or "h" for hours followed by the measured time.
6. Push button. The instrument returns to the "standard display".

Note: The additional information visualization is subject to a time out. If no button is pressed for more than 10 second the instrument comes automatically back to the Standard display..

**Direct set point modification**
This function allows to modify rapidly the set point value selected by [83] A.SP (selection of the active Set point) or to the set point of the segment group (of the programmer) currently in progress.

1. Push button. The upper display shows the acronym of the selected set point (e.g. SP2) and the lower display will show its value.
2. By and buttons, assign to this parameter the desired value
3. Do not push any button for more than 5 second or push the button. In both cases the instrument memorize the new value and come back to the “standard display”.

## *Manual mode*

This operative mode allows you to deactivate automatic control and manually program the percentage power output to the process. When the instrument is in manual mode, the upper display shows the measured value while the lower display shows the power output [preceded by H (for heating action) or C (for cooling action)] The MAN LED is lit. When manual control is selected, the instrument will start to operate with the same power output as the last one supplied by automatic mode and can be modified using the and buttons.

In case of ON/OFF control, 0% corresponds to the deactivated output while any value different from 0 corresponds to the activated output. As in the case of visualization, the programmable values range from H100 (100% output power with reverse action) to C100 (100% output power with direct action).

**Notes**:

- During manual mode, the alarms are operative.
- If you set manual modes during program execution, the program will be frozen and it will restart when the instrument will come back to Auto mode.
- If you set manual modes during self-tune execution, the self- tune function will be aborted.
- During manual mode, all functions not related with the control (wattmeter, independent timer, “worked time”, etc) continue to operate normally..

## *STAND-BY MODE*

This operative mode also deactivates the automatic control but forces the control output to zero. In this mode the instrument operates as an indicator. When the instrument is in stand by mode the upper display will show the measured value while the lower display will show alternately the set point and the message “St.bY”.

Notes:

- During stand by mode, the relative alarms are disabled while the absolute alarms are operative or not according to the ALxo (Alarm x enabling during Stand-by mode) parameter setting.
- If you set stand by mode during program execution, the program will be aborted.
- If you set stand by mode during self-tune execution, the self- tune function will be aborted.
- During stand by mode, all functions not related with the control (wattmeter, independent timer, “worked time”, etc) continue to operate normally.
- When the instrument is swapped from stand by to auto modes, the instrument will start automatically the alarm masking, the soft start functions and the auto-tune (if programmed).

## *AUTOTUNE (EVOTUNE)*

Evotune is a fast and fully automatic procedure that can be started in any condition, regardless the deviation from SP. The controller selects automatically the best tune method and computes the optimum PID parameters. To activate Evotune press button for 3 seconds.

## ERROR MESSAGES

The upper display shows the OVER-RANGE and UNDERRANGE conditions with the following indications:

Over-range: OOOO

Under-range U.U.U.U.

The sensor break will be signalled as an out of range: - - - -

Note: When an over-range or an under-range is detected, the alarms operate as in presence of the maximum or the minimum measurable value respectively.

To check the out of span Error condition, proceed as follows:

1. Check the input signal source and the connecting line.
2. Make sure that the input signal is in accordance with the instrument configuration. Otherwise, modify the input configuration.
3. If no error is detected, send the instrument to your supplier to be checked.

### *List of possible errors*

**ErAT** Fast Auto-tune cannot start. The measure value is tooclose to the set point. Push the button in order to delete the error message.

**ouLd** Overload on the out 4. The messages shows that a short circuit is present on the Out 4 when it is used as output or as a transmitter power suply. When the short circuit disappears the output restart to operate..

**NoAt** Auto-tune not finished within 12 hours.

**ErEP** Possible problem of the instrument memory. The messages disappears automatically. When the error continues, send the instrument to your supplier.

**RonE** Possible problem of the firmware memory. When this error is detected, send the instrument to your supplier.

**Errt** Possible problem of the calibration memory. When this error is detected, send the instrument to your supplier.

## FACTORY RESET

Sometime, e.g. when you re-configure an instrument previously used for other works or from other people or when you have made too many errors during configuration and you decided to re-configure the instrument, it is possible to restore the factory configuration. This action allows to put the instrument in a defined condition (the same it was at the first power ON).

The default data are those typical values loaded in the instrument prior to ship it from factory. To load the factory default parameter set, proceed as follows:

1. Press the button for more than 5 seconds. The upper display will show PASS while the lower display shows 0;
2. Using and buttons set the value -481;
3. Push button;
4. The instrument will turn OFF all LEDs for a few seconds, then the upper display will show dFLt (default) and then all LEDs are turned ON for 2 seconds. At this point the instrument restarts as for a new power ON.

The procedure is complete.

Note: The complete list of the default parameters is available in Chapter "Configuration".

# KM3 Modulator

**USER MANUAL**

M12927CA Rel.1.0 10/2020

## MOUNTING

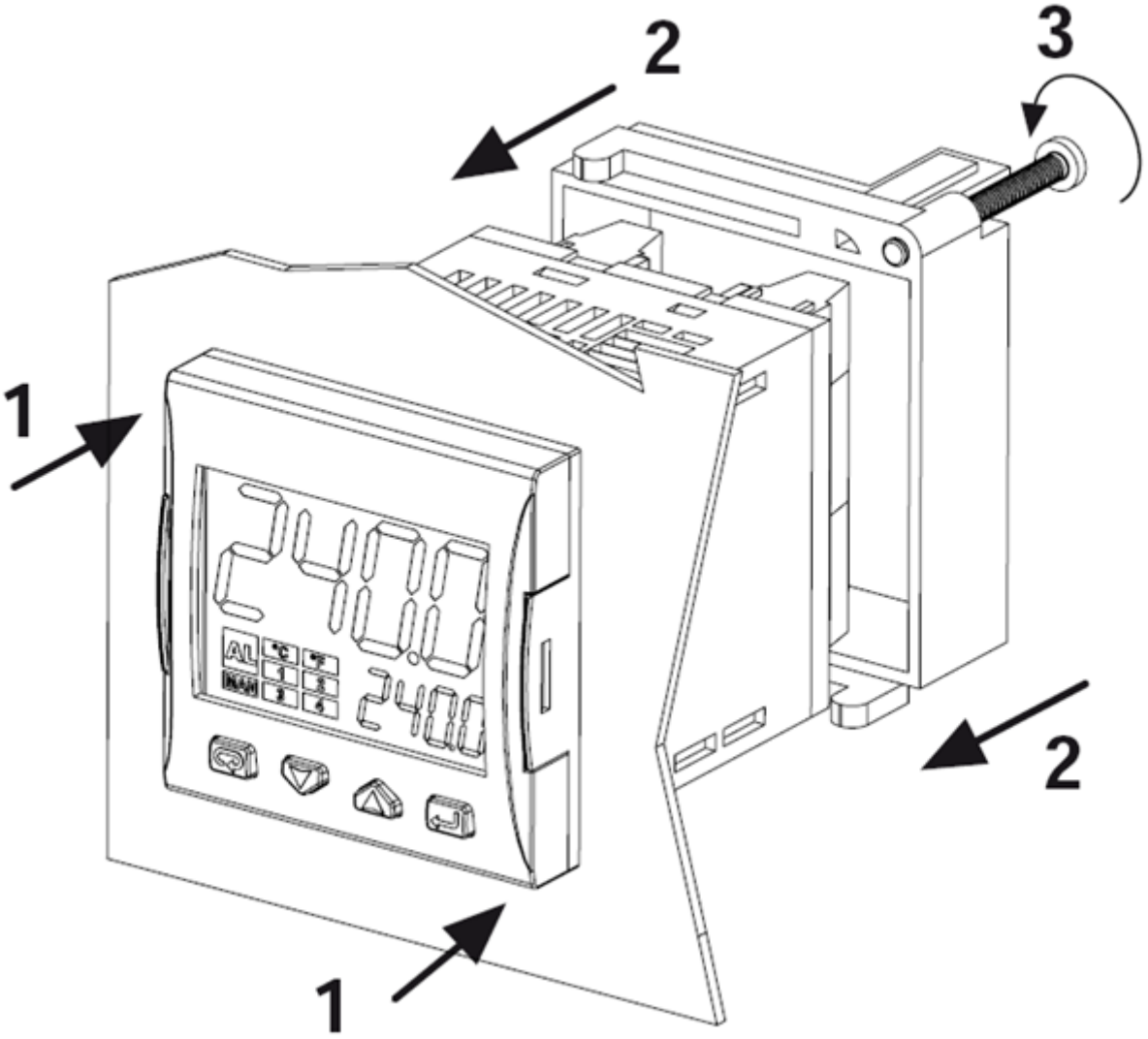

## DISPLAY AND KEYS

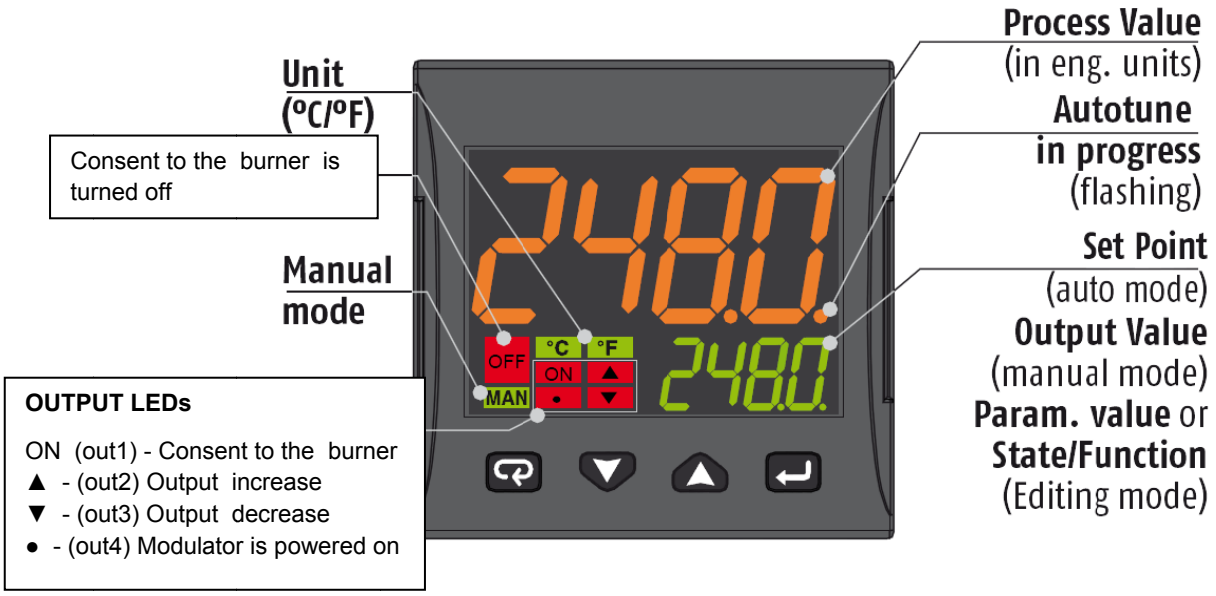


| | Operator Mode | Editing Mode |
|---|---|---|
| ↵ | Access to:<br>- Operator Commands<br>(Timer, Setpoint selection ...)<br>- Parameters<br>- Configuration | Confirm and go to<br>Next parameter |
| ▲ | Access to:<br>- Operator additional information<br>(Output value, running time ...) | Increase the displayed value or select the next element of the parameters list |
| ▼ | Access to:<br>- Set Point | Decrease the displayed value or select the previous element |
| ↻ | Programmable key:<br>Start the programmed function<br>(Autotune, Auto/Man, Timer ...) | Exit from Operator commands/Parameter setting/Configuration |

## CONNECTIONS DIAGRAM

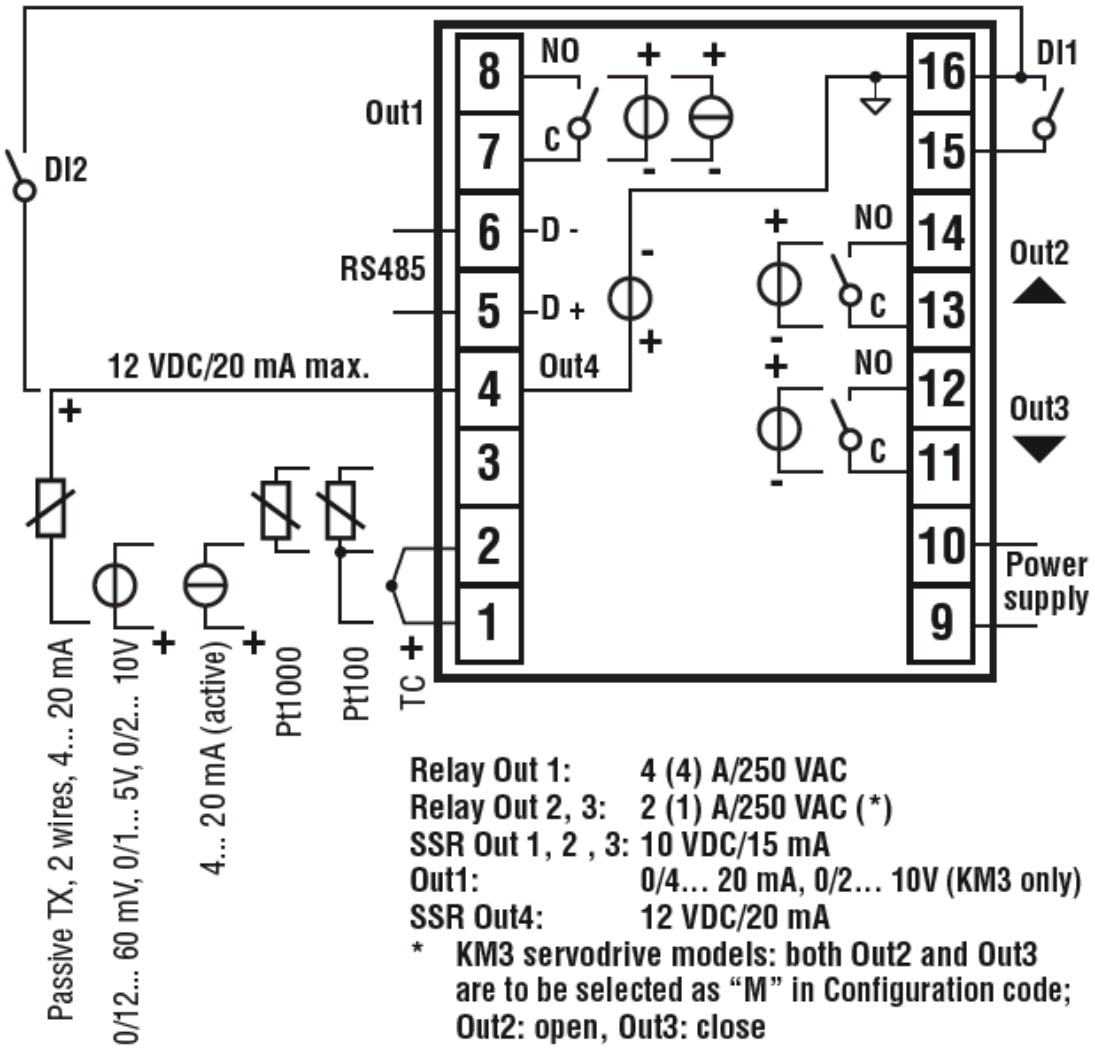


### *Probe connection:*

- **PT1000/NTC/PTC**: between terminal 3 and 2
- **PT 100**: between terminal 3 and 2 with terminal 1
- **Passive pressure probe** 0/4-20 mA: between terminal 4 ( + ) e 1 ( - )
  Note: out4 must be activated ( IO4F must be setted to ON )
- **Powered pressure probe** 0/4-20 mA between terminal 4 (power supply), 2 ( negative) e 1 (positive)
  Note: set IO4F to ON to activate Out4

### *Power supply connection:*

- **Neutral wire:** terminal 9
- **Phase:** terminal 10 ( 100…240 Vac )
- Close terminals 15-16 to switch to the set point 2

### *Output connection:*

- **Channel 1:** terminal 7 and 8 ( burner on – off )
- **Channel 2:** terminal 11 and 12 (servomotor opens)
- **Channel 3:** terminal 13 and 14 (servomotor closes)

## SETPOINT AND HYSTERESIS CONFIGURATION (SP, AL1, HAL1 parameters)

Push the ↵ button to enter into the setpoint configuration:

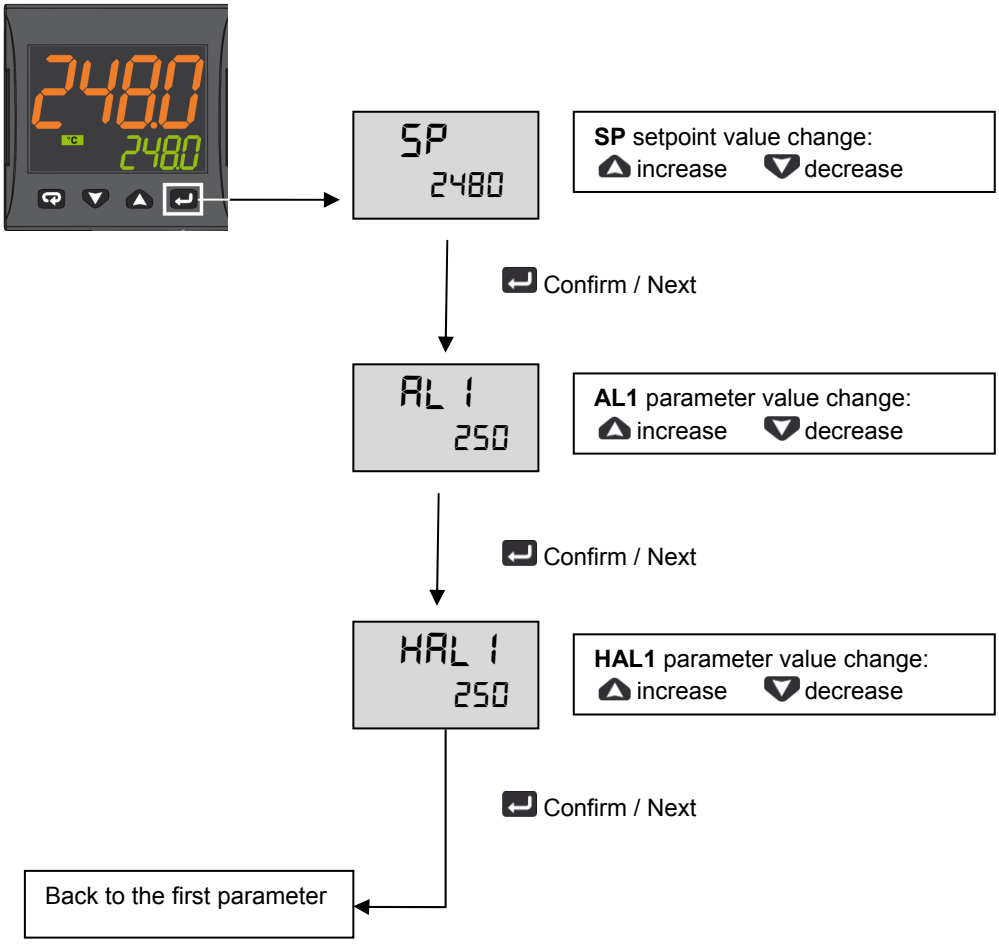


To return to normal mode, press the key for 3 seconds or wait the 10s timeout

### *Operation example*

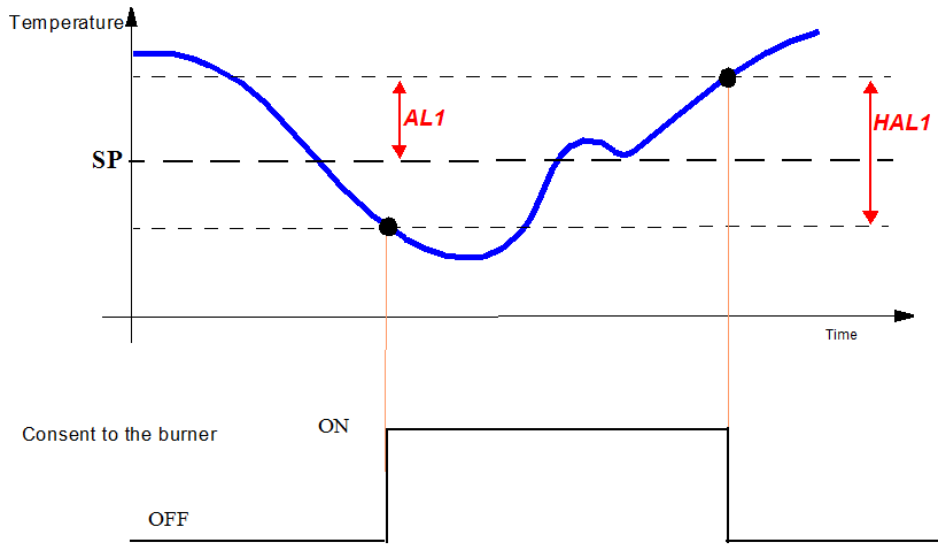

## LIMITED ACCESS LEVEL

Proceed as follows to change some parameters that are not visible in standard user mode:

Press the ↵ key for 3 seconds

Password = 20

Access to parameter:

| | |
|---|---|
| ▲ | Increase the displayed value |
| ▼ | Decrease the displayed value |
| ↵ | Confirm and go to next parameter |

| Param | Description | Values | Default |
|---|---|---|---|
| SEnS | Input type | Pt1 = RTD Pt100<br>Pt10 = RTD Pt1000<br>0.20 = 0..20mA<br>4.20 = 4..20mA Pressure probe<br>0.10 = 0..10V<br>2.10 = 2..10V<br>crAL= Thermocouple K | Depends on the probe |
| SP | Set point 1 | SPLL ... SPLH | See page 7 |
| AL1 | AL1 threshold | AL1L... AL1H (E.U.) | |
| HAL1 | AL1 hysteresis | 1... 9999 (E.U.) | |
| Pb | Proportional band | 1... 9999 (E.U.) | |
| ti | Integral time | 0 (oFF) ... 9999 (s) | |
| td | Derivative time | 0 (oFF) ... 9999 (s) | |
| Str.t | Servomotor stroke time | 5...1000 seconds | |
| db.S | Servomotor dead band | 0...100% | |
| SPLL | Minimum set point value | -1999 ... SPHL | |
| SPHL | Maximum set point value | SPLL ... 9999 | |
| dp | Decimal point position | 0... 3 | |
| SP 2 | Set point 2 | SPLL...SPLH | 60 |
| A.SP | Selection of the active set point | "SP" ... " nSP" | SP |

To exit the parameter setting procedure press the key (for 3 s) or wait until the timeout expiration (about 30 seconds)

## Probe parameters configuration MODULATORE ASCON KM3

| Parameter Group | inP | | | | | | AL1 | | rEG | | | | | SP | | |
|---|---|---|---|---|---|---|---|---|---|---|---|---|---|---|---|---|
| **Parameter** | **Sens** | **dp** | **SSC** | **FSc** | **unit** | **IO4.F (**)** | **AL1 (***)** | **HAL1 (***)** | **Pb (***)** | **ti (***)** | **td (***)** | **Str.t** | **db.S** | **SPLL** | **SPHL** | **SP (***)** |
| Probes | | Dec Point | Scale Min | Scale Max | | | Off | On | p | i | d | servo time s | Band Mo. | SP Min | SP Max | Set point |
| Pt1000 (130°C max) | Pt10 | 1 | | | °C | on | 5 | 10 | 10 | 350 | 1 | * | 5 | 30 | 95 | 80 |
| Pt1000 ( 350°C max) | PT10 | 1 | | | °C | on | 10 | 10 | 10 | 350 | 1 | * | 5 | 0 | 350 | 80 |
| Pt100 (130°C max) | PT1 | 1 | | | °C | on | 5 | 10 | 10 | 350 | 1 | * | 5 | 0 | 95 | 80 |
| Pt100 (350°C max) | Pt1 | 1 | | | °C | on | 10 | 10 | 10 | 350 | 1 | * | 5 | 0 | 350 | 80 |
| Pt100 (0÷100°C 4÷20mA) | 4.20 | 1 | 0 | 100 | | on | 5 | 10 | 10 | 350 | 1 | * | 5 | 0 | 95 | 80 |
| Thermocouple K (1200°C max) | crAL | 0 | | | °C | on | 20 | 25 | 10 | 350 | 1 | * | 5 | 0 | 1200 | 80 |
| Thermocouple J (1000°C max) | J | 0 | | | °C | on | 20 | 25 | 10 | 350 | 1 | * | 5 | 0 | 1000 | 80 |
| 4-20mA / 0-1,6barPressure probe | 4.20 | 0 | 0 | 160 | | on | 20 | 20 | 5 | 120 | 1 | * | 5 | 0 | 160 | 100 |
| 4-20mA / 0-10bar Pressure probe | 4.20 | 0 | 0 | 1000 | | on | 50 | 50 | 5 | 120 | 1 | * | 5 | 0 | 1000 | 600 |
| 4-20mA / 0-16bar Pressure probe | 4.20 | 0 | 0 | 1600 | | on | 80 | 80 | 5 | 120 | 1 | * | 5 | 0 | 1600 | 600 |
| 4-20mA / 0-25bar Pressure probe | 4.20 | 0 | 0 | 2500 | | on | 125 | 125 | 5 | 120 | 1 | * | 5 | 0 | 2500 | 600 |
| 4-20mA / 0-40bar Pressure probe | 4.20 | 0 | 0 | 4000 | | on | 200 | 200 | 5 | 120 | 1 | * | 5 | 0 | 4000 | 600 |
| QBE2002 / 0-25bar Pressure probe | 0.10 | 0 | 0 | 2500 | | 0n | 125 | 125 | 5 | 120 | 1 | * | 5 | 0 | 2500 | 600 |

Note:

(*) Str.t - Servomotor stroke time
SQL33; STM30; SQM10; SQM40; SQM50; SQM54 = 30 (Seconds)
STA12B3.41; SQN30.251; SQN72.4A4A20 = 12 (Seconds)

**(**) Out 4 … on Display led °4 must be switched on, otherwise change the io4.F parameter value from "on" to "out4", confirm the value, quit the configuration mode then change again the io4.F parameter value from "out4" to "on".**

(***) Factory settings. These values must be adapted to machine conditions

N.B. For pressure probe, SP, SPHL, SPLL parameters values are expressed in Kpa (1 bar = 100 Kpa).

# CONFIGURATION

## *How to access configuration level*

The configuration parameters are collected in various groups. Every group defines all parameters related with a specific function (e.g.: control, alarms, output functions).

1. Push the button for more than 5 seconds. The upper display will show PASS while the lower display will show 0.
2. Using and buttons set the programmed password.
   According to the entered password, it is possible to see a part of the parameters listed in the "configuration parameters" section.
   a. Enter "**30**" as password to view all the configuration parameters
   b. Enter "**20**" as password to view the parameters of the "limited access level". At this point, only the parameters with attribute **Liv = A** or **Liv = O** will be editable.
   c. Leave the password blank to edit "user level" parameters, that are identified by attribute **Liv = O**
3. Push the button. If the password is correct the display will show the acronym of the first parameter group preceded by the symbol: . In other words the upper display will show: inP (group of the **Input parameters**).

The instrument is in configuration mode. To press for more than 5 seconds, the instrument will return to the "standard display.

**Keyboard functions during parameter changing:**

| | **Operator Mode** |
|---|---|
| | When the upper display is showing a group and the lower display is blank, this key allows to enter in the selected group. When the upper display is showing a parameter and the lower display is showing its value, this key allows to store the selected value for the current parameter and access the next parameter within the same group. |
| | Allows to increase the value of the selected parameter. |
| | Allows to decrease the value of the selected parameter. |
| | Short presses allow you to exit the current group of parameters and select a new group. A long press terminates the configuration procedure (the instrument returns to the normal display). |
| + | These two keys allow to return to the previous group. Proceed as follows:<br>Push the button and maintaining the pressure, then push the ; release both the buttons. |

## *Configuration Parameters*

| **inP GROUP - input confiuration** | | | | | |
|---|---|---|---|---|---|
| **Liv** | **N°** | **Param** | **Description** | **Values** | **Default** |
| A | 1 | SEnS | Input type | Pt1 = RTD Pt100<br>Pt10 = RTD Pt1000<br>0.20 = 0..20mA<br>4.20 = 4..20mA Pressure probe<br>0.10 = 0..10V<br>2.10 = 2..10V<br>crAL= Thermocouple K | Depends on the probe |
| A | 2 | dp | Decimal point position | 0... 3 | See page 7 |
| A | 3 | SSc | Initial scale read-out for linear inputs (avaiable only if SEnS parameter is not equal to Pt1, Pt10, crAL values) | -1999... 9999 | 0 |
| C | 4 | FSc | Full scale read-out for linear input inputs (avaiable only if SEnS parameter is not equal to Pt1, Pt10, crAL values) | -1999... 9999 | Depends on the probe |
| C | 5 | unit | Unit of measure<br>(present only in the case of temperature probe) | °C/°F | °C |
| C | 6 | Fil | Digital filter on the measured value | 0 (= OFF)... 20.0 s | 1.0 |
| C | 7 | inE | Selection of the Sensor Out of Range type that will enable the safety output value | or = Over range<br>ou = Under range<br>our = over e under range | or |

| | | | | | |
|---|---|---|---|---|---|
| C | 8 | oPE | Safety output value | -100... 100 | 0 |
| C | 9 | io4.F | I/O4 function selection | on = Out4 will be ever ON (used as a transmitter power supply) ,out4 = Uscita 4 (Used as digital output 4), dG2c = Digital input 2 for contact closure, dG2U = Digital input 2 driven by 12... 24 VDC | on |
| C | 10 | diF1 | Digital input 1 function | oFF = Not used,<br>1 = Alarm reset,<br>2 = Alarm acknowledge (ACK),<br>3 = Hold of the measured value,<br>4 = Stand by mode,<br>5 = Manual mode,<br>6 = HEAt with SP1 and CooL with SP2,<br>7 = Timer RUN/Hold/Reset,<br>8 = Timer Run,<br>9 = Timer Reset,<br>10 = Timer Run/Hold,<br>11 = Timer Run/Reset,<br>12 = Timer Run/Reset with lock,<br>13 = Program Start,<br>14 = Program Reset,<br>15 = Program Hold,<br>16 = Program Run/Hold,<br>17 = Program Run/Reset,<br>18 = Sequential SP selection,<br>19 = SP1 - SP2 selection,<br>20 = SP1... SP4 binary selection,<br>21 = Digital inputs in parallel | 19 |
| C | 12 | di.A | Digital Inputs Action<br>(DI2 only if configured) | 0 = DI1 direct action, DI2 direct action<br>1 = DI1 reverse action, DI2 direct action<br>2 = DI1 direct action, DI2 reverse action<br>3 = DI1 reverse action, DI2 reverse action | 0 |

**Out GROUP- Output parameters**

| Liv | N° | Param | Description | Values | Default |
|---|---|---|---|---|---|
| C | 14 | o1F | Out 1 function | AL = Alarm output | AL |
| C | 15 | o1AL | Initial scale value of the analog retransmission | -1999 ... Ao1H | 1 |
| C | 18 | o1Ac | Out 1 action | dir = Direct action<br>rEU = Reverse action<br>dir.r = Direct with reversed LED<br>ReU.r = Reverse with reversed LED | rEUr.r |
| C | 19 | o2F | Out 2 function | H.rEG = Heating output | H.rEG |
| C | 21 | o2Ac | Out 2 action | dir = Direct action<br>rEU = Reverse action<br>dir.r = Direct with reversed LED<br>ReU.r = Reverse with reversed LED | dir |
| C | 22 | o3F | Out 3 function | H.rEG = Heating output | H.rEG |
| C | 24 | o3Ac | Out 3 action | dir = Direct action<br>rEU = Reverse action<br>dir.r = Direct with reversed LED<br>ReU.r = Reverse with reversed LED | dir |

**AL1 GROUP - Alarm 1 parameters**

| Liv | N° | Param | Descrizione | Values | Default |
|---|---|---|---|---|---|
| C | 28 | AL1t | Tipo allarme AL1 | nonE = Alarm not used<br>LoAb = Absolute low alarm<br>HiAb = Absolute high alarm<br>LHAo = Windows alarm in alarm outside the windows<br>LHAI = Windows alarm in alarm inside the | HidE |

| | | | | | |
|---|---|---|---|---|---|
| | | | | windows<br>SE.br = Sensor Break<br>LodE = Deviation low alarm (relative)<br>HidE = Deviation high alarm (relative)<br>LHdo = Relative band alarm in alarm out of the band<br>LHdi = Relative band alarm in alarm inside the band | |
| C | 29 | Ab1 | Alarm 1 function | 0... 15<br>+1 = Not active at power up<br>+2 = Latched alarm (manual reset)<br>+4 = Acknowledgeable alarm<br>+8 = Relative alarm not active at set point change | 0 |
| C | 30 | AL1L | -- For High and low alarms, it is the low limit of the AL1 threshold;<br>-- For band alarm, it is low alarm threshold | -1999... AL1H (E.U.) | -199.9 |
| C | 31 | AL1H | -- For High and low alarms, it is the high limit of the AL1 threshold;<br>-- For band alarm, it is high alarm threshold | AL1L... 9999 (E.U.) | 999.9 |
| O | 32 | AL1 | AL1 threshold | AL1L... AL1H (E.U.) | See page 7 |
| O | 33 | HAL1 | AL1 hysteresis | 1... 9999 (E.U.) | See page 7 |
| C | 34 | AL1d | AL1 delay | 0 (oFF)... 9999 (s) | oFF |
| C | 35 | AL1o | Alarm 1 enabling during Stand-by mode and out of range conditions | 0 = Alarm 1 disabled during Stand by and out of range<br>1 = Alarm 1 enabled in stand by mode<br>2 = Alarm 1 enabled in out of range condition<br>3 = Alarm 1 enabled in stand by mode and in overrange<br>condition | 1 |

**GRUPPO AL2 - parametri allarme 2**

| Liv | N° | Param | Description | Values | Default |
|---|---|---|---|---|---|
| C | 36 | AL2t | Alarm 2 type | nonE = Alarm not used<br>LoAb = Absolute low alarm<br>HiAb = Absolute high alarm<br>LHAo = Windows alarm in alarm outside the windows<br>LHAI = Windows alarm in alarm inside the windows<br>SE.br = Sensor Break<br>LodE = Deviation low alarm (relative)<br>HidE = Deviation high alarm (relative)<br>LHdo = Relative band alarm in alarm out of the band<br>LHdi = Relative band alarm in alarm inside the band | SE.br |
| C | 37 | Ab2 | Alarm 2 function | 0... 15<br>+1 = Not active at power up<br>+2 = Latched alarm (manual reset)<br>+4 = Acknowledgeable alarm<br>+8 = Relative alarm not active at set point change | 0 |
| C | 42 | AL2d | AL2 hysteresis | 0 (oFF)... 9999 (s) | oFF |
| C | 43 | AL2o | Alarm 2 enabling during Stand-by mode and out of range conditions | 0 = Alarm 2 disabled during Stand by and out of range<br>1 = Alarm 2 enabled in stand by mode<br>2 = Alarm 2 enabled in out of range condition<br>3 = Alarm 2 enabled in stand by mode and in overrange<br>condition | 0 |

| AL3 Group - alarm 3 parameters | | | | | |
|---|---|---|---|---|---|
| **Liv** | **N°** | **Param** | **Description** | **Values** | **Default** |
| | 44 | AL3t | Alarm 3 type | nonE = Alarm not used<br>LoAb = Absolute low alarm<br>HiAb = Absolute high alarm<br>LHAo = Windows alarm in alarm outside the windows<br>LHAI = Windows alarm in alarm inside the windows<br>SE.br = Sensor Break<br>LodE = Deviation low alarm (relative)<br>HidE = Deviation high alarm (relative)<br>LHdo = Relative band alarm in alarm out of the band<br>LHdi = Relative band alarm in alarm inside the band | nonE |

| LbA Group - Loop break alarm | | | | | |
|---|---|---|---|---|---|
| **Liv** | **N°** | **Param** | **Descrizione** | **Values** | **Default** |
| C | 52 | LbAt | LBA time | Da 0 (oFF) a 9999 (s) | oFF |

| rEG Group - Control parameters | | | | | |
|---|---|---|---|---|---|
| **Liv** | **N°** | **Param** | **Description** | **Values** | **Default** |
| C | 56 | cont | Control type | Pid = PID (heat and/or)<br>On.FA = ON/OFF asymmetric hysteresis<br>On.FS = ON/OFF symmetric hysteresis<br>nr = Heat/Cool ON/OFF control with neutral zone<br>3Pt = Servomotor control (available only when Output 2 and<br>Output 3 have been ordered as “M”) | 3pt |
| C | 57 | Auto | Autotuning selection | -4 = Oscillating auto-tune with automaticrestart at power up and after all point change<br>-3 = Oscillating auto-tune with manual start<br>-2 = Oscillating -tune with auto-matic start at the first power up only<br>-1 = Oscillating auto-tune with auto-matic restart at every power up<br>0 = Not used<br>1 = Fast auto tuning with automatic restart at every power up<br>2 = Fast auto-tune with automatic start the first power up only<br>3 = FAST auto-tune with manual start<br>4 = FAST auto-tune with automatic restart at power up and<br>after set point change<br>5 = Evo-tune with automatic restart at every power up<br>6 = Evo-tune with automatic start the first power up only<br>7 = Evo-tune with manual start<br>8 = Evo-tune with automatic restart at power up and after a set point change | 7 |
| C | 58 | tunE | Manual start of the Autotuning | oFF = Not active<br>on = Active | oFF |

| | | | | | |
|---|---|---|---|---|---|
| C | 59 | SELF | Self tuning enabling | no = The instrument does not perform the self-tuning<br>YES = The instrument is performing the self-tuning | No |
| A | 62 | Pb | Proportional band | 1... 9999 (E.U.) | See page 7 |
| A | 63 | ti | Integral time | 0 (oFF) ... 9999 (s) | See page 7 |
| A | 64 | td | Derivative time | 0 (oFF) ... 9999 (s) | See page 7 |
| C | 65 | Fuoc | Fuzzy overshoot control | 0.00... 2.00 | 1 |
| C | 69 | rS | Manual reset (Integral pre-load) | -100.0... +100.0 (%) | 0.0 |
| A | 70 | Str.t | Servomotor stroke time | 5...1000 seconds | See page 7 |
| A | 71 | db.S | Servomotor dead band | 0...100% | 5 |
| C | 72 | od | Delay at power up | 0.00 (oFF) ... 99.59 (hh.mm) | oFF |

**SP Group - Set point parameters**

| Liv | N° | Param | Description | Values | Default |
|---|---|---|---|---|---|
| C | 76 | nSP | Number of used set points | 1... 4 | 2 |
| A | 77 | SPLL | Minimum set point value | -1999 ... SPHL | See page 7 |
| A | 78 | SPHL | Maximum set point value | SPLL ... 9999 | See page 7 |
| O | 79 | SP | Set point 1 | SPLL ... SPLH | See page 7 |
| C | 80 | SP 2 | Set point 2 | SPLL ... SPLH | 60 |
| | 83 | A.SP | Selection of the active set point | "SP" ... " nSP" | SP |
| C | 84 | SP.rt | Remote set point type | RSP = The value coming from serial link is used as remote set point<br>trin = The value will be added to the local set point selected by<br>A.SP and the sum becomes the operative set point<br>PErc = The value will be scaled on the input range and this value will be used as remote SP | trin |
| C | 85 | SPLr | Local/remote set point selection | Loc = Local<br>rEn = Remote | Loc |
| C | 86 | SP.u | Rate of rise for POSITIVE set point change (ramp UP) | 0.01... 99.99 (inF) Eng. units per minute | inF |
| C | 87 | SP.d | Rate of rise for NEGATIVE set point change (ramp DOWN) | 0.01... 99.99 (inF) Eng. units per minute | inF |

**PAn Group - Operator HMI**

| Liv | N° | Param | Description | Values | Default |
|---|---|---|---|---|---|
| C | 118 | PAS2 | Level 2 password (limited access level) | oFF (Level 2 not protected by password)<br>1... 200 | 20 |
| C | 119 | PAS3 | Level 3 password (complete configuration level) | 3... 300 | 30 |
| C | 120 | PAS4 | Password livello (livello configurazione a codice) | 201... 400 | 300 |
| C | 121 | uSrb | button function during RUN TIME | nonE = No function<br>tunE = Auto-tune/self-tune enabling. A single press (longer than 1 second)<br>starts the auto-tune<br>oPLo = Manual mode. The first pressure puts the instrument in manual mode<br>(OPLO) while a second one puts the instrument in Auto mode | tunE |

| | | | | | |
|---|---|---|---|---|---|
| | | | | AAc = Alarm reset<br>ASi = Alarm acknowledge<br>chSP = Sequential set point selection<br>St.by = Stand by mode. The first press puts the instrument in stand by<br>mode while a second one puts the instrument in Auto mode.<br>Str.t = Timer run/hold/reset<br>P.run = Program run<br>P.rES = Program reset<br>P.r.H.r = Program run/hold/reset | |
| C | 122 | diSP | Display management | Spo = Operative set point | SPo |
| C | 123 | di.cL | Display colour | 0 = The display colour is used to show the actual deviation (PV - SP)<br>1 = Display red (fix)<br>2 = Display green (fix)<br>3 = Display orange (fix) | 2 |
| | 125 | diS.t | Display Timeout | -- oFF (display always ON)<br>-- 0.1... 99.59 (mm.ss) | oFF |
| C | 126 | fiLd | Filter on the displayed value | -- oFF (filter disabled)<br>-- From 0.0 (oFF) to 20.0 (E.U.) | oFF |
| C | 128 | dSPu | Instrument status at power ON | AS.Pr = Starts in the same way it was prior to the power down<br>Auto = Starts in Auto mode<br>oP.0 = Starts in manual mode with a power output equal to zero<br>St.bY = Starts in stand-by mode | Auto |
| C | 129 | oPr.E | Operative modes enabling | ALL = All modes will be selectable by the next parameter<br>Au.oP = Auto and manual (OPLO) mode only will be selectable by the next parameter<br>Au.Sb = Auto and Stand-by modes only will be selectable by the next parameter | ALL |
| C | 130 | oPEr | Operative mode selection | If oPr.E = ALL: - Auto = Auto mode<br>- oPLo = Manual mode<br>- St.bY = Stand by mode<br>If oPr.E = Au.oP: - Auto = Auto mode<br>- oPLo = Manual mode<br>If oPr.E = Au.Sb: - Auto = Auto mode<br>- St.bY = Stand by mode | Auto |

**SEr Group - Serial link parameter**

| Liv | N° | Param | Description | Values | Default |
|---|---|---|---|---|---|
| C | 131 | Add | Instrument address | -- oFF<br>-- 1... 254 | 1 |
| C | 132 | bAud | baud rate | 1200 = 1200 baud<br>2400 = 2400 baud<br>9600 = 9600 baud<br>19.2 = 19200 baud<br>38.4 = 38400 baud | 9600 |
| C | 133 | trSP | Selection of the value to be retransmitted (Master) | nonE = Retransmission not used (the instrument is a slave)<br>rSP = The instrument becomes a Master and retransmits the operative set point<br>PErc = The instrument become a Master and it retransmits the power output | nonE |

| con Group - Consumption parameters | | | | | |
|---|---|---|---|---|---|
| **Liv** | **N°** | **Param** | **Description** | **Values** | **Default** |
| C | 134 | Co.tY | Count type | oFF = Not used<br>1 = Instantaneous power (kW)<br>2 = Power consumption (kW/h)<br>3 = Energy used during program execution. This measure starts from<br>zero when a program runs end stops at the end of the program. A<br>new program execution will reset the value<br>4 = Total worked days: number of hours the instrument is turned ON<br>divided by 24.<br>5 = Total worked hours: number of hours the instrument is turned ON.<br>6 = Total worked days with threshold: number of hours the instrument is<br>turned ON divided by 24, the controller is forced in stand-by when<br>Co.ty value reaches the threshold set in [137] h.Job.<br>7 = Total worked hours with threshold: number of hours the instrument<br>is turned ON, the controller is forced in stand-by when Co.ty value<br>reaches the threshold set in [137] h.Job.<br>8 = Totalizer of control relay worked days: number of hours the control<br>relay has been in ON condition, divided by 24.<br>9 = Totalizer of control relay worked hours: number of hours the control<br>relay has been in ON condition.<br>10 = Totalizer of control relay worked days with threshold: number of<br>hours the control relay has been in ON condition divided by 24,<br>the controller is forced in stand-by when Co.ty value reaches the<br>threshold set in [137] h.Job.<br>11 = Totalizer of control relay worked hours with threshold: number of<br>hours the control relay has been in ON condition, the controller is<br>forced in stand-by when Co.ty value reaches the threshold set in<br>[137] h.Job. | oFF |
| C | 138 | t.Job | Worked time (not resettable) | 0... 9999 days | 0 |

| cAL Group - User calibration group | | | | | |
|---|---|---|---|---|---|
| **Liv** | **N°** | **Param** | **Description** | **Values** | **Default** |
| C | 139 | AL.P | Adjust Low Point | From -1999 to (AH.P - 10) in engineering units | 0 |
| C | 140 | AL.o | Adjust Low Offset | -300... +300 (E.U.) | 0 |
| C | 141 | AH.P | Adjust High Point | From (AL.P + 10) to 9999 engineering units | 999.9 |
| C | 142 | AH.o | Adjust High Offset | -300... +300 | 0 |

# OPERATIVE MODES

When the instrument is powered, it starts immediately to work according to the parameters values loaded in its memory. The instrument behaviour and its performance are governed by the value of the stored parameters.

At power ON the instrument can start in one of the following mode depending on its configuration:

**Automatic Mode** In Automatic mode the instrument drives automatically the control output according to the parameter value set and the set point/measured value.

**Manual Mode** (OPLO): In Manual mode the the upper display shows the measured value while the lower display shows the power output The lower display shows the power output [preceded by H (for heating) or C (for cooling)], MAN is lit and the instrument allows you to set manually the control output power. No Automatic action will be made.

**Stand by Mode** (St.bY): In stand-by mode the instrument operates as an indicator. It will show on the upper display the measured value and on the lower display the set point alternately to the “St.bY” messages and forces the control outputs to zero.

We define all the above described conditions as “Standard Display”.

As we have seen, it is always possible to modify the value assigned to a parameter independently from the operative modes selected.

## *AUTOMATIC MODE*

Keyboard function when the instrument is in Auto mode:

| | **Modo Operatore** |
|---|---|
| | Allows entry into parameter modification procedures |
| | Allows you to start the “Direct set point modification” function (see below). |
| | Allows you to display the “additional informations” (see below). |
| | Performs the action programmed by [121] uSrb ( button function during RUN TIME) parameter |

**Additional information**
This instrument is able to show you some additional informations that can help you to manage your system.
The additional informations are related to how the instrument is programmed, hence in many cases, only part of this information is available.

1. When the instrument is showing the “standard display” push button. The lower display will show H or c followed by a number. This value is the current power output applied to the process. The H show you that the action is a Heating action while the "c" show you that the action is a Cooling action
2. Push button again. When the programmer is running the lower display will show the segment currently performed and the Event status as shown below:
   r 1.00 where the first character can be r for a ramp or S for a soak, the next digit show the number of the segment (e.g. S3 means Soak number 3) and the twoless significant digits (LSD) show you the status of the two event (the LSD is the Event 2)..
3. Push button again. When the programmer is running the lower display will show the theoretical remaining time to the end of the program preceded by a "P" letter:
   P84.3
4. Push button again. When the wattmeter function is running the lower display will show U followed by the measured energy..
5. Push button. When the “Worked time count” is running the lower display will show "d" for days or "h" for hours followed by the measured time.
6. Push button. The instrument returns to the "standard display".

Note: The additional information visualization is subject to a time out. If no button is pressed for more than 10 second the instrument comes automatically back to the Standard display..

**Direct set point modification**
This function allows to modify rapidly the set point value selected by [83] A.SP (selection of the active Set point) or to the set point of the segment group (of the programmer) currently in progress.

1. Push button. The upper display shows the acronym of the selected set point (e.g. SP2) and the lower display will show its value.
2. By and buttons, assign to this parameter the desired value
3. Do not push any button for more than 5 second or push the button. In both cases the instrument memorize the new value and come back to the “standard display”.

## *Manual mode*

This operative mode allows you to deactivate automatic control and manually program the percentage power output to the process. When the instrument is in manual mode, the upper display shows the measured value while the lower display shows the power output [preceded by H (for heating action) or C (for cooling action)] The MAN LED is lit. When manual control is selected, the instrument will start to operate with the same power output as the last one supplied by automatic mode and can be modified using the and buttons.

In case of ON/OFF control, 0% corresponds to the deactivated output while any value different from 0 corresponds to the activated output. As in the case of visualization, the programmable values range from H100 (100% output power with reverse action) to C100 (100% output power with direct action).

**Notes**:

- During manual mode, the alarms are operative.
- If you set manual modes during program execution, the program will be frozen and it will restart when the instrument will come back to Auto mode.
- If you set manual modes during self-tune execution, the self- tune function will be aborted.
- During manual mode, all functions not related with the control (wattmeter, independent timer, “worked time”, etc) continue to operate normally..

## *STAND-BY MODE*

This operative mode also deactivates the automatic control but forces the control output to zero. In this mode the instrument operates as an indicator. When the instrument is in stand by mode the upper display will show the measured value while the lower display will show alternately the set point and the message “St.bY”.

Notes:

- During stand by mode, the relative alarms are disabled while the absolute alarms are operative or not according to the ALxo (Alarm x enabling during Stand-by mode) parameter setting.
- If you set stand by mode during program execution, the program will be aborted.
- If you set stand by mode during self-tune execution, the self- tune function will be aborted.
- During stand by mode, all functions not related with the control (wattmeter, independent timer, “worked time”, etc) continue to operate normally.
- When the instrument is swapped from stand by to auto modes, the instrument will start automatically the alarm masking, the soft start functions and the auto-tune (if programmed).

## *AUTOTUNE (EVOTUNE)*

Evotune is a fast and fully automatic procedure that can be started in any condition, regardless the deviation from SP. The controller selects automatically the best tune method and computes the optimum PID parameters. To activate Evotune press button for 3 seconds.

## ERROR MESSAGES

The upper display shows the OVER-RANGE and UNDERRANGE conditions with the following indications:

Over-range: OOOO

Under-range U.U.U.U.

The sensor break will be signalled as an out of range: - - - -

Note: When an over-range or an under-range is detected, the alarms operate as in presence of the maximum or the minimum measurable value respectively.

To check the out of span Error condition, proceed as follows:

1. Check the input signal source and the connecting line.
2. Make sure that the input signal is in accordance with the instrument configuration. Otherwise, modify the input configuration.
3. If no error is detected, send the instrument to your supplier to be checked.

### *List of possible errors*

**ErAT** Fast Auto-tune cannot start. The measure value is tooclose to the set point. Push the button in order to delete the error message.

**ouLd** Overload on the out 4. The messages shows that a short circuit is present on the Out 4 when it is used as output or as a transmitter power suply. When the short circuit disappears the output restart to operate..

**NoAt** Auto-tune not finished within 12 hours.

**ErEP** Possible problem of the instrument memory. The messages disappears automatically. When the error continues, send the instrument to your supplier.

**RonE** Possible problem of the firmware memory. When this error is detected, send the instrument to your supplier.

**Errt** Possible problem of the calibration memory. When this error is detected, send the instrument to your supplier.

## FACTORY RESET

Sometime, e.g. when you re-configure an instrument previously used for other works or from other people or when you have made too many errors during configuration and you decided to re-configure the instrument, it is possible to restore the factory configuration. This action allows to put the instrument in a defined condition (the same it was at the first power ON).

The default data are those typical values loaded in the instrument prior to ship it from factory. To load the factory default parameter set, proceed as follows:

1. Press the button for more than 5 seconds. The upper display will show PASS while the lower display shows 0;
2. Using and buttons set the value -481;
3. Push button;
4. The instrument will turn OFF all LEDs for a few seconds, then the upper display will show dFLt (default) and then all LEDs are turned ON for 2 seconds. At this point the instrument restarts as for a new power ON.

The procedure is complete.

Note: The complete list of the default parameters is available in Chapter "Configuration".

# VERSIONE ALTA-BASSA FIAMMA "AB" / PROGRESSIVO "PR"
# "AB" HIGH-LOW / "PR" PROGRESSIVE VERSION

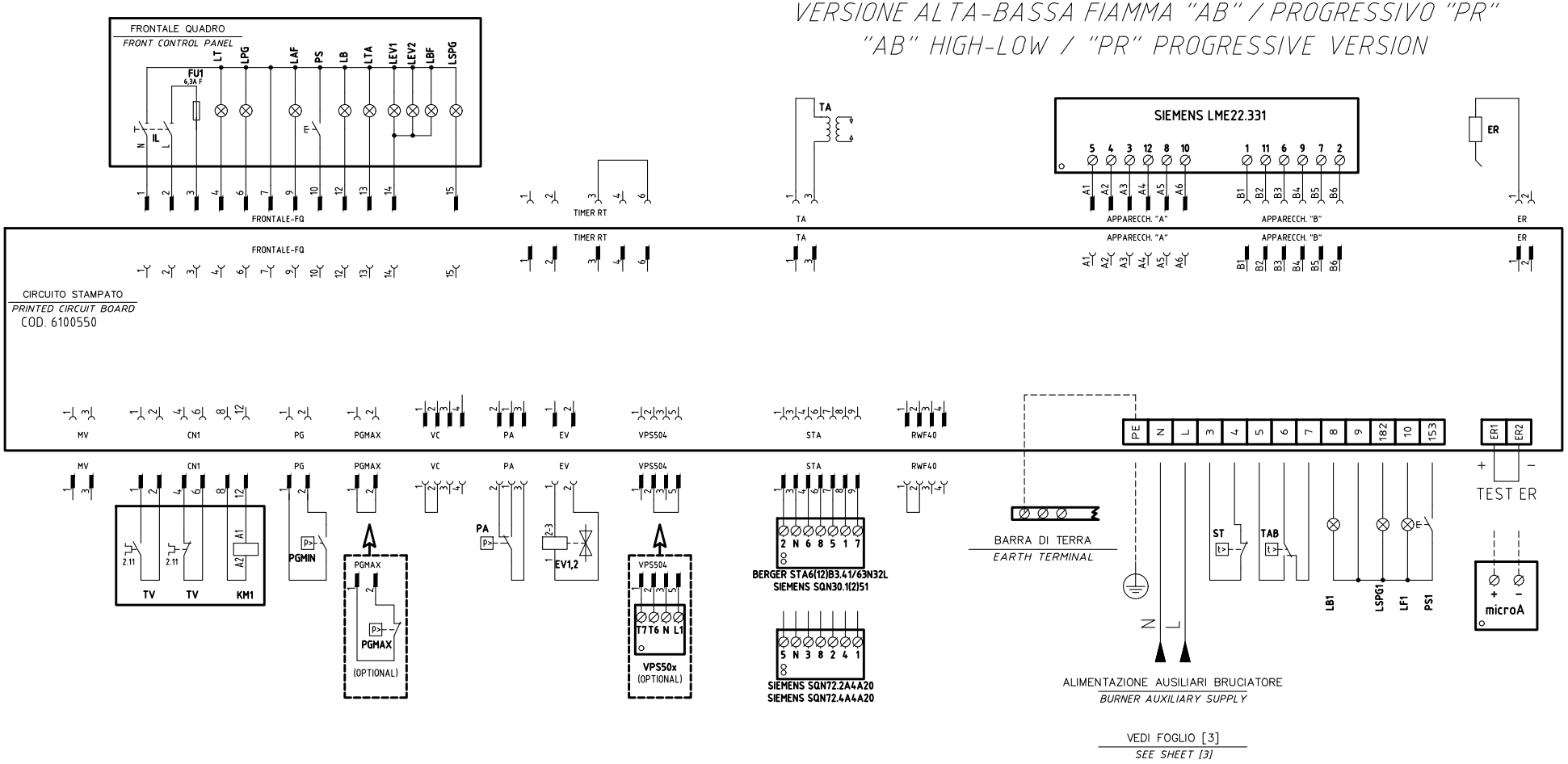


| REV. | MODIFICA | DATA | FIRME |
|---|---|---|---|
| 03 | MODULATOR UPDATE | 10/09/14 | U. PINTON |
| 02 | AGGIUNTO/ADDED RWF40.0xx | 07/03/14 | U. PINTON |
| 01 | AGGIUNTO/ADDED "600V" | 20/06/12 | U. PINTON |

UNIGAS

Impianto: TIPI/TYPES P61 ÷ P73/LX60/LX65/LX72
MODELLO x–.AB(PR)(MD).x.xx.A.xx

Descrizione: VERSIONE "MD" CON RWF5x.xx / 600V / KM3 E SMA+SMF
VERSION "MD" WITH RWF5x.xx / 600V / KM3 AND SMA+SMF

Ordine

Commessa

Esecutore: U. PINTON

Data Controllato: 10/09/2014

Controllato: E. CAVALLI

Data: 18/01/2012

Revisione: 03

Dis. N. 18 – 0236

PREC.: /

FOGLIO: 1

SEGUE: 2

TOTALE: 5

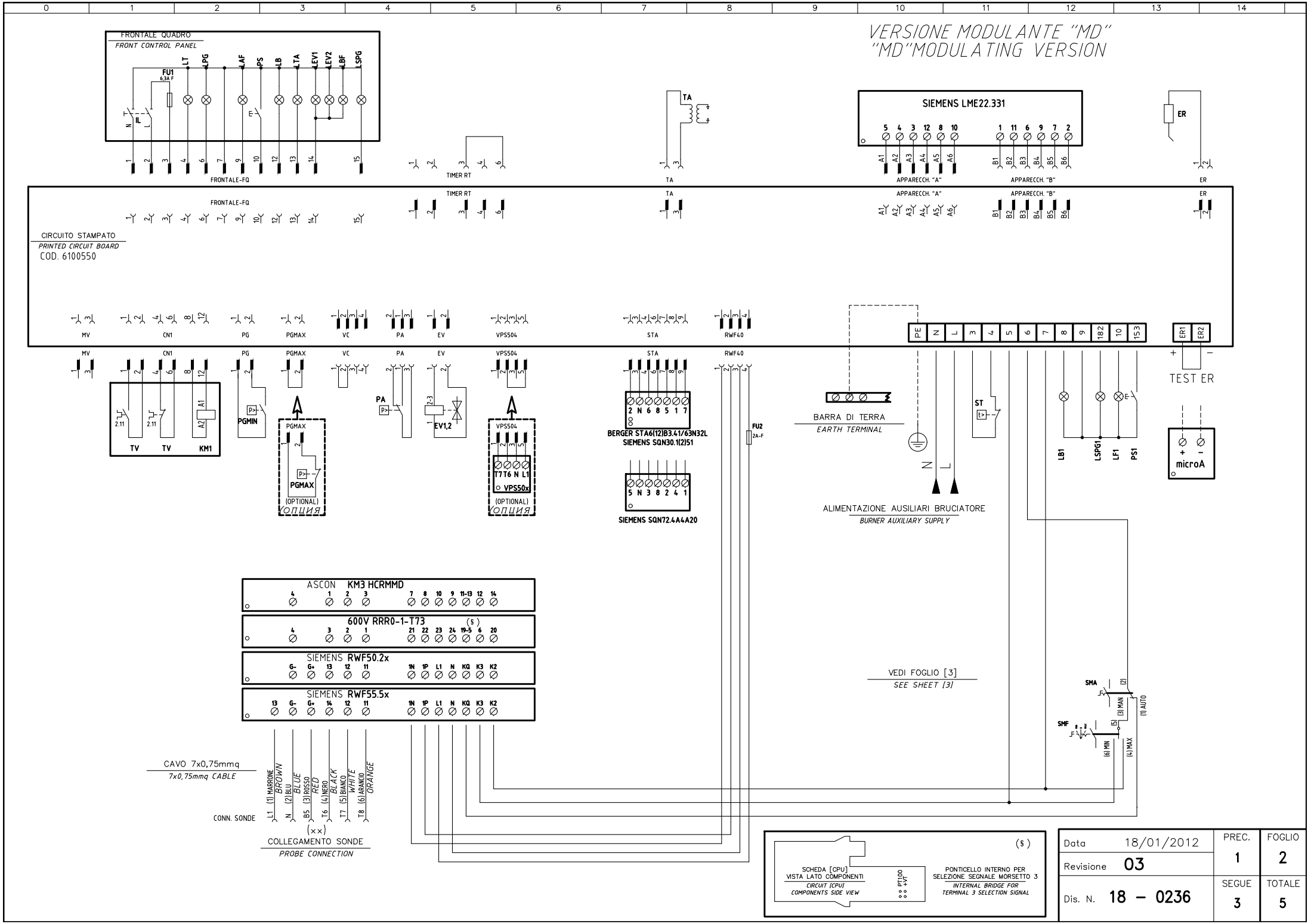
VERSIONE MODULANTE "MD"
"MD" MODULATING VERSION
FRONTALE QUADRO
FRONT CONTROL PANEL
FU1
6,3A F
LT
LPG
LAF
PS
LB
LTA
LEV1
LEV2
LBF
LSPG
IL
FRONTALE-FQ
TIMER RT
TA
SIEMENS LME22.331
APPARECCH. "A"
APPARECCH. "B"
ER
CIRCUITO STAMPATO
PRINTED CIRCUIT BOARD
COD. 6100550
MV
CN1
PG
PGMAX
VC
PA
EV
VPS504
STA
RWF40
PE
N
L
TEST ER
TV
KM1
PGMIN
PGMAX
(OPTIONAL)
ОПЦИЯ
EV1,2
VPS50x
BERGER STA6(12)B3.41/63N32L
SIEMENS SQN30.1(2)51
SIEMENS SQN72.4A4A20
FU2
2A-F
BARRA DI TERRA
EARTH TERMINAL
ST
LB1
LSPG1
LF1
PS1
microA
ALIMENTAZIONE AUSILIARI BRUCIATORE
BURNER AUXILIARY SUPPLY
ASCON KM3 HCRMMD
600V RRR0-1-T73
SIEMENS RWF50.2x
SIEMENS RWF55.5x
VEDI FOGLIO [3]
SEE SHEET [3]
SMA
SMF
(1) AUTO
(3) MAN
(4) MAX
(6) MIN
CAVO 7x0,75mmq
7x0,75mmq CABLE
CONN. SONDE
(1) MARRONE BROWN
(2) BLU BLUE
(3) ROSSO RED
(4) NERO BLACK
(5) BIANCO WHITE
(6) ARANCIO ORANGE
COLLEGAMENTO SONDE
PROBE CONNECTION
SCHEDA [CPU]
VISTA LATO COMPONENTI
CIRCUIT [CPU]
COMPONENTS SIDE VIEW
PT100
+VT
PONTICELLO INTERNO PER
SELEZIONE SEGNALE MORSETTO 3
INTERNAL BRIDGE FOR
TERMINAL 3 SELECTION SIGNAL
Data 18/01/2012
Revisione 03
Dis. N. 18 – 0236
PREC. 1
FOGLIO 2
SEGUE 3
TOTALE 5

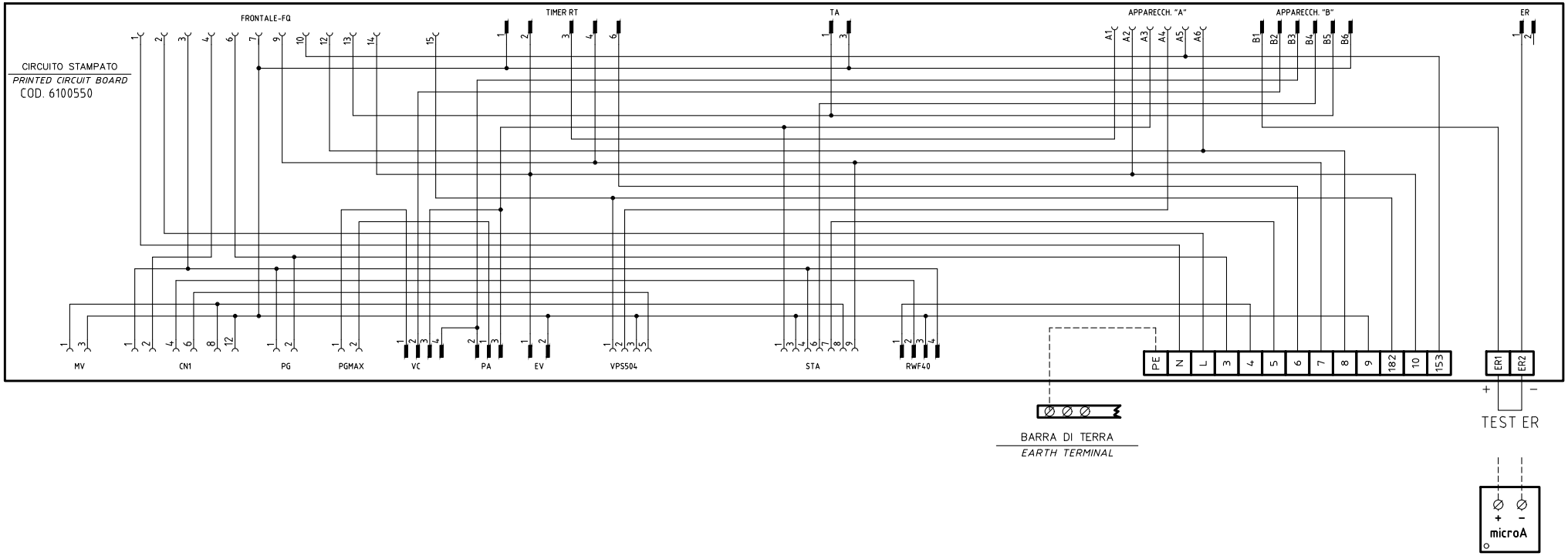


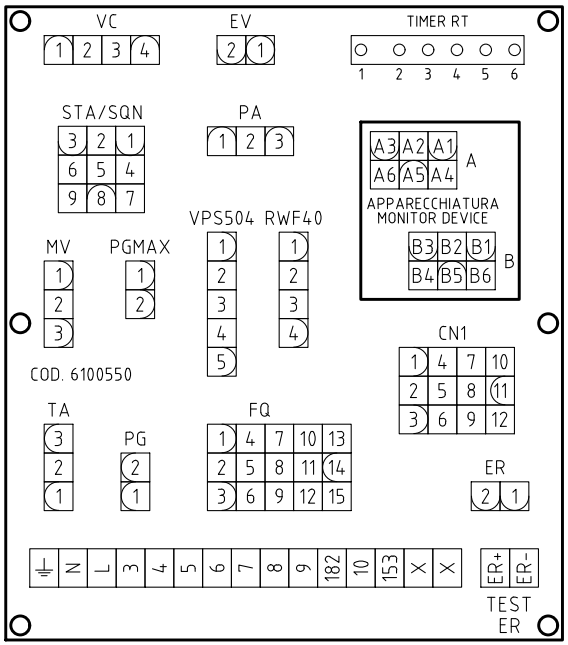


SERVOCOMANDO SERRANDA ARIA
*AIR DAMPER ACTUATOR*
BERGER STA6(12)B3.41/63N32L

| | |
|---|---|
| ST2 | ALTA FIAMMA<br>*HIGH FLAME* |
| ST0 | SOSTA<br>*STAND-BY* |
| ST1 | BASSA FIAMMA<br>*LOW FLAME* |
| MV | NON USATA<br>*NOT USED* |

SERVOCOMANDO SERRANDA ARIA (ALTERNATIVO)
*AIR DAMPER ACTUATOR (ALTERNATIVE)*
SIEMENS SQN30.1(2)51A

| | |
|---|---|
| I | ALTA FIAMMA<br>*HIGH FLAME* |
| II | SOSTA<br>*STAND-BY* |
| III | BASSA FIAMMA<br>*LOW FLAME* |
| V | NON USATA<br>*NOT USED* |

SERVOCOMANDO SERRANDA ARIA (ALTERNATIVO)
*AIR DAMPER ACTUATOR (ALTERNATIVE)*
SIEMENS SQN72.xA4A20

| | |
|---|---|
| I (ROSSO)<br>*I (RED)* | ALTA FIAMMA<br>*HIGH FLAME* |
| II (BLU)<br>*II (BLUE)* | SOSTA<br>*STAND-BY* |
| III (ARANCIO)<br>*III (ORANGE)* | BASSA FIAMMA<br>*LOW FLAME* |
| IV (NERO)<br>*IV (BLACK)* | NON USATA<br>*NOT USED* |

| | | | |
|---|---|---|---|
| Data | 18/01/2012 | PREC. | FOGLIO |
| Revisione | 03 | 2 | 3 |
| Dis. N. | 18 – 0236 | SEGUE | TOTALE |
| | | 4 | 5 |

(××)

ATTENZIONE COLLEGAMENTO SONDE CON CONNETTORE 7 POLI

*WARNING PROBE CONNECTION WITH 7 PINS CONNECTOR*

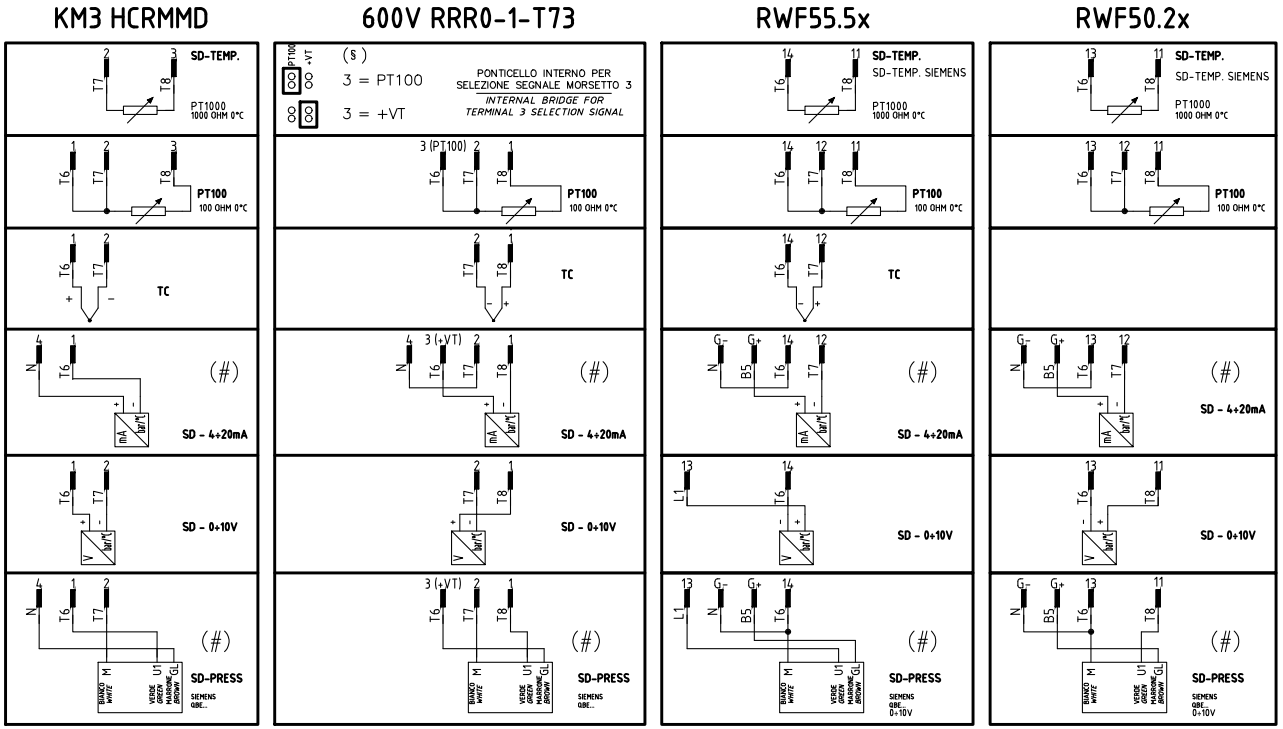


(#)
COLLEGAMENTO SOLO PER TRASDUTTORI PASSIVI
*TRASDUCER PASSIVE CONNECTION ONLY*

# QG - MC1

MORSETTIERA COLLEGAMENTO LINEA E MOTORE TRIFASE

*MOTOR THREE PHASES AND ELECTRIC SUPPLY CONNECTION TERMINAL BOARD*

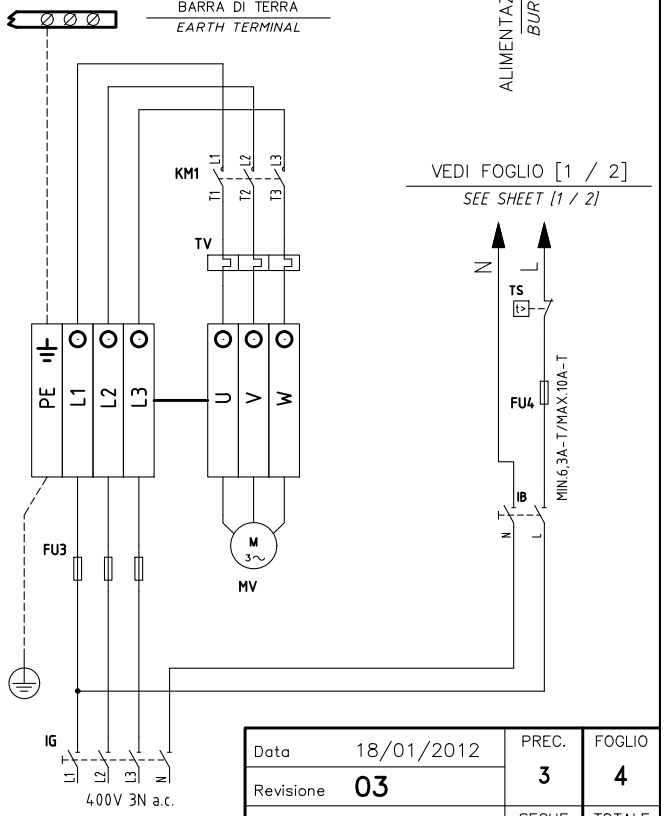


| | | | |
|---|---|---|---|
| Data | 18/01/2012 | PREC. 3 | FOGLIO 4 |
| Revisione | 03 | | |
| Dis. N. | 18 – 0236 | SEGUE 5 | TOTALE 5 |

| Sigla/Item | Funzione | Function |
|---|---|---|
| 600V RRR0-1-T73 | REGOLATORE MODULANTE (ALTERNATIVO) | BURNER MODULATOR (ALTERNATIVE) |
| BERGER STA6(12)B3.41/63N32L | SERVOCOMANDO SERRANDA ARIA | AIR DAMPER ACTUATOR |
| ER | ELETTRODO RILEVAZIONE FIAMMA | FLAME DETECTION ELECTRODE |
| EV1,2 | ELETTROVALVOLE GAS (O GRUPPO VALVOLE) | GAS ELECTRO-VALVES (OR VALVES GROUP) |
| FU1 | FUSIBILE DI LINEA | LINE FUSE |
| FU2 | FUSIBILE AUSILIARIO | AUXILIARY FUSE |
| FU3 | FUSIBILI LINEA MOTORE VENTILATORE | FAN MOTOR LINE FUSES |
| FU4 | FUSIBILE DI LINEA | LINE FUSE |
| IB | INTERRUTTORE LINEA BRUCIATORE | BURNER LINE SWITCH |
| IG | INTERRUTTORE GENERALE | MAINS SWITCH |
| IL | INTERRUTTORE LINEA AUSILIARI | AUXILIARY LINE SWITCH |
| KM1 | CONTATTORE MOTORE VENTILATORE | FAN MOTOR CONTACTOR |
| KM3 HCRMMD | REGOLATORE MODULANTE (ALTERNATIVO) | BURNER MODULATOR (ALTERNATIVE) |
| LAF | LAMPADA SEGNALAZIONE ALTA FIAMMA BRUCIATORE | BURNER IN HIGH FLAME INDICATOR LIGHT |
| LB | LAMPADA SEGNALAZIONE BLOCCO BRUCIATORE | INDICATOR LIGHT FOR BURNER LOCK-OUT |
| LB1 | LAMPADA SEGNALAZIONE BLOCCO BRUCIATORE | INDICATOR LIGHT FOR BURNER LOCK-OUT |
| LBF | LAMPADA SEGNALAZIONE BASSA FIAMMA BRUCIATORE | BURNER IN LOW FLAME INDICATOR LIGHT |
| LEV1 | LAMPADA SEGNALAZIONE APERTURA [EV1] | INDICATOR LIGHT FOR OPENING OF ELECTRO-VALVE [EV1] |
| LEV2 | LAMPADA SEGNALAZIONE APERTURA [EV2] | INDICATOR LIGHT FOR OPENING OF ELECTRO-VALVE [EV2] |
| LF1 | LAMPADA SEGNALAZIONE FUNZIONAMENTO BRUCIATORE | INDICATOR LIGHT BURNER OPERATION |
| LPG | LAMPADA SEGNALAZIONE PRESENZA GAS IN RETE | INDICATOR LIGHT FOR PRESENCE OF GAS IN THE NETWORK |
| LSPG | LAMPADA SEGNALAZIONE BLOCCO CONTROLLO TENUTA VALVOLE | INDICATOR LIGHT FOR LEAKAGE OF VALVES |
| LSPG1 | LAMPADA SEGNALAZIONE BLOCCO CONTROLLO TENUTA VALVOLE | INDICATOR LIGHT FOR LEAKAGE OF VALVES |
| LT | LAMPADA SEGNALAZIONE BLOCCO TERMICO | INDICATOR LIGHT FOR MOTOR OVERLOAD THERMAL CUTOUT |
| LTA | LAMPADA SEGNALAZIONE TRASFORMATORE DI ACCENSIONE | IGNITION TRANSFORMER INDICATOR LIGHT |
| MV | MOTORE VENTILATORE | FAN MOTOR |
| PA | PRESSOSTATO ARIA | AIR PRESSURE SWITCH |
| PGMAX | PRESSOSTATO GAS DI MASSIMA PRESSIONE | MAXIMUM PRESSURE GAS SWITCH |
| PGMIN | PRESSOSTATO GAS DI MINIMA PRESSIONE | MINIMUM GAS PRESSURE SWITCH |
| PS | PULSANTE SBLOCCO FIAMMA | FLAME UNLOCK BUTTON |
| PS1 | PULSANTE SBLOCCO FIAMMA | FLAME UNLOCK BUTTON |
| PT100 | SONDA DI TEMPERATURA | TEMPERATURE PROBE |
| RWF50.2x | REGOLATORE MODULANTE (ALTERNATIVO) | BURNER MODULATOR (ALTERNATIVE) |
| RWF55.5x | REGOLATORE MODULANTE (ALTERNATIVO) | BURNER MODULATOR (ALTERNATIVE) |
| SD-PRESS | SONDA DI PRESSIONE | PRESSURE PROBE |
| SD-TEMP. | SONDA DI TEMPERATURA | TEMPERATURE PROBE |
| SD - 0÷10V | TRASDUTTORE USCITA IN TENSIONE | TRANSDUCER VOLTAGE OUTPUT |
| SD - 4÷20mA | TRASDUTTORE USCITA IN CORRENTE | TRANSDUCER CURRENT OUTPUT |
| SIEMENS LME22.331 | APPARECCHIATURA CONTROLLO FIAMMA | CONTROL BOX |
| SIEMENS SQN30.1(2)51 | SERVOCOMANDO SERRANDA ARIA (ALTERNATIVO) | AIR DAMPER ACTUATOR (ALTERNATIVE) |
| SIEMENS SQN72.2A4A20 | SERVOCOMANDO SERRANDA ARIA (ALTERNATIVO) | AIR DAMPER ACTUATOR (ALTERNATIVE) |
| SIEMENS SQN72.4A4A20 | SERVOCOMANDO SERRANDA ARIA (ALTERNATIVO) | AIR DAMPER ACTUATOR (ALTERNATIVE) |
| SMA | SELETTORE MANUALE/AUTOMATICO | MANUAL/AUTOMATIC SWITCH |
| SMF | SELETTORE MANUALE FUNZIONAMENTO MIN-0-MAX | MIN-0-MAX MANUAL OPERATION SWITCH |
| ST | SERIE TERMOSTATI/PRESSOSTATI | SERIES OF THERMOSTATS OR PRESSURE SWITCHES |
| TA | TRASFORMATORE DI ACCENSIONE | IGNITION TRANSFORMER |
| TAB | TERMOSTATO/PRESSOSTATO ALTA-BASSA FIAMMA | HIGH-LOW THERMOSTAT/PRESSURE SWITCHES |
| TC | TERMOCOPPIA | THERMOCOUPLE |
| TS | TERMOSTATO/PRESSOSTATO DI SICUREZZA | SAFETY THERMOSTAT OR PRESSURE SWITCH |
| TV | TERMICO MOTORE VENTILATORE | FAN MOTOR THERMAL |
| VPS50x | CONTROLLO DI TENUTA VALVOLE GAS (OPTIONAL) | GAS PROVING SYSTEM (OPTIONAL) |
| microA | MICROAMPEROMETRO | MICROAMMETER |