LX60
LX65
LX72

Gas burners

MANUAL OF INSTALLATION - USE - MAINTENANCE

CIB UNIGAS

BURNERS - BRUCIATORI - BRULERS - BRENNER - QUEMADORES - ГОРЕЛКИ

M03988CE Rev. 4.4 01/2024

TABLE OF CONTENTS

WARNINGS **3**

PART I: INSTALLATION **6**

BURNERS SPECIFICATIONS 6

Specifications *6*
Country and usefulness gas categories *7*
Matching the burner to the boiler *7*
Overall dimensions (mm) *9*
Performance curves *12*

MOUNTINGS AND CONNECTIONS 13
Packing *13*
Fitting the burner to the boiler *13*

GAS TRAIN CONNECTIONS *14*
Assembling the gas grain *15*
Siemens VGD20.. and VGD40.. gas valves - with SKP2.. (pressure governor) *16*
Pressure adjusting range *17*
Gas Proving System VPS504 ..... *18*

ELECTRICAL CONNECTIONS 19
Note on elecrtical supply *19*
Connection diagram *20*
Rotation of fan motor *20*

ADJUSTMENTS 21
Combustion head pressure curves vs. the gas flow rate *21*
Measuring the gas pressure in the combustion head *21*
Gas pressure in combustion head vs. gas flow rate curves *22*
Adjusting air and gas flow rates *23*
Startup Output *23*
Adjustments - brief description *23*
Adjusting procedure *24*
Progressive burners *27*
Fully modulating burners *28*
Calibration of air and gas pressure switches *28*
Calibration of air pressure switch *28*
Calibration of low gas pressure switch *28*
Adjusting the high gas pressure switch (when provided) *28*

PART II: OPERATION **29**

OPERATION 30

PART III: MAINTENANCE **32**

ROUTINE MAINTENANCE 32
Removing the filter in theMULTIBLOC DUNGS MB-DLE 415 - 420 B01 1” 1/2 - 2” *32*
Inspection and replacement of the MULTIBLOC DUNGS MBC..SE filter (Threaded valves group) *33*
Gas filter maintenance *33*
Adjusting the electrodes *34*
Replacing the electrodes *35*
Checking the detection current *35*
Seasonal stop *35*

TROUBLESHOOTING 36

BURNER EXPLODED VIEW 37

WIRING DIAGRAMS 42

APPENDIX

DANGERS, WARNINGS AND NOTES OF CAUTION

THIS MANUAL IS SUPPLIED AS AN INTEGRAL AND ESSENTIAL PART OF THE PRODUCT AND MUST BE DELIVERED TO THE USER.

INFORMATION INCLUDED IN THIS SECTION ARE DEDICATED BOTH TO THE USER AND TO PERSONNEL FOLLOWING PRODUCT INSTALLATION AND MAINTENANCE.

THE USER WILL FIND FURTHER INFORMATION ABOUT OPERATING AND USE RESTRICTIONS, IN THE SECOND SECTION OF THIS MANUAL. WE HIGHLY RECOMMEND TO READ IT.

CAREFULLY KEEP THIS MANUAL FOR FUTURE REFERENCE.

1) GENERAL INTRODUCTION

- The equipment must be installed in compliance with the regulations in force, following the manufacturer's instructions, by qualified personnel.
- Qualified personnel means those having technical knowledge in the field of components for civil or industrial heating systems, sanitary hot water generation and particularly service centres authorised by the manufacturer.
- Improper installation may cause injury to people and animals, or damage to property, for which the manufacturer cannot be held liable.
- Remove all packaging material and inspect the equipment for integrity.

In case of any doubt, do not use the unit - contact the supplier.

The packaging materials (wooden crate, nails, fastening devices, plastic bags, foamed polystyrene, etc), should not be left within the reach of children, as they may prove harmful.

- Before any cleaning or servicing operation, disconnect the unit from the mains by turning the master switch OFF, and/or through the cut-out devices that are provided.
- Make sure that inlet or exhaust grilles are unobstructed.
- In case of breakdown and/or defective unit operation, disconnect the unit. Make no attempt to repair the unit or take any direct action.

Contact qualified personnel only.

Units shall be repaired exclusively by a servicing centre, duly authorised by the manufacturer, with original spare parts and accessories.

Failure to comply with the above instructions is likely to impair the unit's safety.

To ensure equipment efficiency and proper operation, it is essential that maintenance operations are performed by qualified personnel at regular intervals, following the manufacturer's instructions.

- When a decision is made to discontinue the use of the equipment, those parts likely to constitute sources of danger shall be made harmless.
- In case the equipment is to be sold or transferred to another user, or in case the original user should move and leave the unit behind, make sure that these instructions accompany the equipment at all times so that they can be consulted by the new owner and/or the installer.
- This unit shall be employed exclusively for the use for which it is meant. Any other use shall be considered as improper and, therefore, dangerous.

The manufacturer shall not be held liable, by agreement or otherwise, for damages resulting from improper installation, use and failure to comply with the instructions supplied by the manufacturer.The occurrence of any of the following circustances may cause explosions, polluting unburnt gases (example: carbon monoxide CO), burns, serious harm to people, animals and things:

- Failure to comply with one of the WARNINGS in this chapter
- Incorrect handling, installation, adjustment or maintenance of the burner
- Incorrect use of the burner or incorrect use of its parts or optional supply

2) SPECIAL INSTRUCTIONS FOR BURNERS

- The burner should be installed in a suitable room, with ventilation openings complying with the requirements of the regulations in force, and sufficient for good combustion.
- Only burners designed according to the regulations in force should be used.
- This burner should be employed exclusively for the use for which it was designed.
- Before connecting the burner, make sure that the unit rating is the same as delivery mains (electricity, gas oil, or other fuel).
- Observe caution with hot burner components. These are, usually, near to the flame and the fuel pre-heating system, they become hot during the unit operation and will remain hot for some time after the burner has stopped.

When the decision is made to discontinue the use of the burner, the user shall have qualified personnel carry out the following operations:

a Remove the power supply by disconnecting the power cord from the mains.

b Disconnect the fuel supply by means of the hand-operated shut-off valve and remove the control handwheels from their spindles.

Special warnings

- Make sure that the burner has, on installation, been firmly secured to the appliance, so that the flame is generated inside the appliance fire-box.
- Before the burner is started and, thereafter, at least once a year, have qualified personnel perform the following operations:

a set the burner fuel flow rate depending on the heat input of the appliance;

b set the flow rate of the combustion-supporting air to obtain a combustion efficiency level at least equal to the lower level required by the regulations in force;

c check the unit operation for proper combustion, to avoid any harmful or polluting unburnt gases in excess of the limits permitted by the regulations in force;

d make sure that control and safety devices are operating properly;

e make sure that exhaust ducts intended to discharge the products of combustion are operating properly;

f on completion of setting and adjustment operations, make sure that all mechanical locking devices of controls have been duly tightened;

g make sure that a copy of the burner use and maintenance instructions is available in the boiler room.

- In case of a burner shut-down, reser the control box by means of the RESET pushbutton. If a second shut-down takes place, call the Technical Service, **without trying to RESET further**.
- The unit shall be operated and serviced by qualified personnel only, in compliance with the regulations in force.

3) GENERAL INSTRUCTIONS DEPENDING ON FUEL USED

3a) ELECTRICAL CONNECTION

- For safety reasons the unit must be efficiently earthed and installed as required by current safety regulations.
- It is vital that all saftey requirements are met. In case of any doubt, ask for an accurate inspection of electrics by qualified personnel, since the manufacturer cannot be held liable for damages that may be caused by failure to correctly earth the equipment.
- Qualified personnel must inspect the system to make sure that it is adequate to take the maximum power used by the equipment shown on the equipment rating plate. In particular, make sure that the system cable cross section is adequate for the power absorbed by the unit.
- No adaptors, multiple outlet sockets and/or extension cables are permitted to connect the unit to the electric mains.
- An omnipolar switch shall be provided for connection to mains, as required by the current safety regulations.
- The use of any power-operated component implies observance of a few basic rules, for example:
  - do not touch the unit with wet or damp parts of the body and/or with bare feet;
  - do not pull electric cables;
  - do not leave the equipment exposed to weather (rain, sun, etc.) unless expressly required to do so;
  - do not allow children or inexperienced persons to use equipment;
- The unit input cable shall not be replaced by the user.
  In case of damage to the cable, switch off the unit and contact qualified personnel to replace.
  When the unit is out of use for some time the electric switch supplying all the power-driven components in the system (i.e. pumps, burner, etc.) should be switched off.

3b) FIRING WITH GAS, LIGHT OIL OR OTHER FUELS

GENERAL

- The burner shall be installed by qualified personnel and in compliance with regulations and provisions in force; wrong installation can cause injuries to people and animals, or damage to property, for which the manufacturer cannot be held liable.
- Before installation, it is recommended that all the fuel supply system pipes be carefully cleaned inside, to remove foreign matter that might impair the burner operation.
- Before the burner is commissioned, qualified personnel should inspect the following:

a the fuel supply system, for proper sealing;
b the fuel flow rate, to make sure that it has been set based on the firing rate required of the burner;
c the burner firing system, to make sure that it is supplied for the designed fuel type;
d the fuel supply pressure, to make sure that it is included in the range shown on the rating plate;
e the fuel supply system, to make sure that the system dimensions are adequate to the burner firing rate, and that the system is equipped with all the safety and control devices required by the regulations in force.

- When the burner is to remain idle for some time, the fuel supply tap or taps should be closed.

SPECIAL INSTRUCTIONS FOR USING GAS

Have qualified personnel inspect the installation to ensure that:

a the gas delivery line and train are in compliance with the regulations and provisions in force;
b all gas connections are tight;
c the boiler room ventilation openings are such that they ensure the air supply flow required by the current regulations, and in any case are sufficient for proper combustion.

- Do not use gas pipes to earth electrical equipment.
- Never leave the burner connected when not in use. Always shut the gas valve off.
- In case of prolonged absence of the user, the main gas delivery valve to the burner should be shut off.

Precautions if you can smell gas

a do not operate electric switches, the telephone, or any other item likely to generate sparks;
b immediately open doors and windows to create an air flow to purge the room;
c close the gas valves;
d contact qualified personnel.

- Do not obstruct the ventilation openings of the room where gas appliances are installed, to avoid dangerous conditions such as the development of toxic or explosive mixtures.

DIRECTIVES AND STANDARDS

Gas burners

European directives

-Regulation 2016/426/UE (appliances burning gaseous fuels)
-2014/35/UE (Low Tension Directive)
-2014/30/UE (Electromagnetic compatibility Directive)
-2006/42/EC (Machinery Directive)

Harmonized standards

-UNI EN 676 (Automatic forced draught burners for gaseous fuels)
-EN 55014-1 (Electromagnetic compatibility- Requirements for house hold appliances, electric tools and similar apparatus)
-EN 60204-1:2006 (Safety of machinery – Electrical equipment of machines.)
-CEI EN 60335-1 (Specification for safety of household and similar electrical appliances);
-CEI EN 60335-2-102 (Household and similar electrical appliances. Safety. Particular requirements for gas, oil and solid-fuel burning appliances having electrical connections).
-UNI EN ISO 12100:2010 (Safety of machinery - General principles for design - Risk assessment and risk reduction);

Light oil burners

European directives

-2014/35/UE (Low Tension Directive)
-2014/30/UE (Electromagnetic compatibility Directive)
-2006/42/EC (Machinery Directive)

Harmonized standards

-UNI EN 267-2011(Automatic forced draught burners for liquid fuels)
-EN 55014-1 (Electromagnetic compatibility- Requirements for house hold appliances, electric tools and similar apparatus)
-EN 60204-1:2006 (Safety of machinery – Electrical equipment of machines.)
-CEI EN 60335-1 (Specification for safety of household and similar electrical appliances);
-CEI EN 60335-2-102 (Household and similar electrical appliances. Safety. Particular requirements for gas, oil and solid-fuel burning appliances having electrical connections).
-UNI EN ISO 12100:2010 (Safety of machinery - General principles for design - Risk assessment and risk reduction);

Heavy oil burners

European Directives

-2014/35/UE (Low Tension Directive)
-2014/30/UE (Electromagnetic compatibility Directive)
-2006/42/EC (Machinery Directive)

Harmonized standards

-UNI EN 267(Automatic forced draught burners for liquid fuels)
-EN 55014-1 (Electromagnetic compatibility- Requirements for house hold appliances, electric tools and similar apparatus)
-EN 60204-1:2006 (Safety of machinery – Electrical equipment of machines.)
-CEI EN 60335-1 (Specification for safety of household and similar electrical appliances);
-CEI EN 60335-2-102 (Household and similar electrical appliances. Safety. Particular requirements for gas, oil and solid-fuel burning appliances having electrical connections).
-UNI EN ISO 12100:2010 (Safety of machinery - General principles for design - Risk assessment and risk reduction);

Gas - Light oil burners

European Directives

-Regulation 2016/426/UE (appliances burning gaseous fuels)
-2014/35/UE (Low Tension Directive)
-2014/30/UE (Electromagnetic compatibility Directive)
-2006/42/EC (Machinery Directive)

Harmonized standards

-UNI EN 676 (Automatic forced draught burners for gaseous fuels)
-UNI EN 267(Automatic forced draught burners for liquid fuels)
-EN 55014-1 (Electromagnetic compatibility- Requirements for house hold appliances, electric tools and similar apparatus)
-EN 60204-1:2006 (Safety of machinery – Electrical equipment of machines.)
-CEI EN 60335-1 (Specification for safety of household and similar electrical appliances);
-CEI EN 60335-2-102 (Household and similar electrical appliances. Safety. Particular requirements for gas, oil and solid-fuel burning appliances having electrical connections).
-UNI EN ISO 12100:2010 (Safety of machinery - General principles for design - Risk assessment and risk reduction);

Gas - Heavy oil burners

European directives:

-Regulation 2016/426/UE (appliances burning gaseous fuels)
-2014/35/UE (Low Tension Directive)
-2014/30/UE (Electromagnetic compatibility Directive)
-2006/42/EC (Machinery Directive)

Harmonized standards

-UNI EN 676 (Automatic forced draught burners for gaseous fuels)
-EN 55014-1 (Electromagnetic compatibility- Requirements for house hold appliances, electric tools and similar apparatus)
-EN 60204-1:2006 (Safety of machinery – Electrical equipment of machines.)
-CEI EN 60335-1 (Specification for safety of household and similar electrical appliances);
-CEI EN 60335-2-102 (Household and similar electrical appliances. Safety. Particular requirements for gas, oil and solid-fuel burning appliances having electrical connections).
-UNI EN ISO 12100:2010 (Safety of machinery - General principles for design - Risk assessment and risk reduction);

Industrial burners

European directives

-Regulation 2016/426/UE (appliances burning gaseous fuels)
-2014/35/UE (Low Tension Directive)
-2014/30/UE (Electromagnetic compatibility Directive)
-2006/42/EC (Machinery Directive)

Harmonized standards

-EN 55014-1 (Electromagnetic compatibility- Requirements for house hold appliances, electric tools and similar apparatus)
-EN 746-2 (Industrial thermoprocessing equipment - Part 2: Safety requirements for combustion and fuel handling systems)
-UNI EN ISO 12100:2010 (Safety of machinery - General principles for design - Risk assessment and risk reduction);
-EN 60204-1:2006 (Safety of machinery – Electrical equipment of machines.)
-EN 60335-2 (Electrical equipment of non-electric appliances for household and similar purposes. Safety requirements)

Burner data plate

For the following information, please refer to the data plate:

- burner type and burner model: must be reported in any communication with the supplier
- burner ID (serial number): must be reported in any communication with the supplier
- date of production (year and month)
- information about fuel type and network pressure

Type	--
Model	--
Year	--
S.Number	--
Output	--
Oil Flow	--
Fuel	--
Category	--
Gas Pressure	--
Viscosity	--
El.Supply	--
El.Consump.	--
Fan Motor	--
Protection	--
Drwaing n°	--
P.I.N.	--

SYMBOLS USED

WARNING! Failure to observe the warning may result in irreparable damage to the unit or damage to the environment

DANGER! Failure to observe the warning may result in serious injuries or death.

WARNING! Failure to observe the warning may result in electric shock with lethal consequences

Figures, illustrations and images used in this manual may differ in appearance from the actual product.

BURNER SAFETY

The burners - and the configurations described below - comply with the regulations in force regarding health, safety and the environment. For more in-depth information, refer to the declarations of conformity that are an integral part of this Manual.

DANGER! Incorrect motor rotation can seriously damage property and injure people.

Residual risks deriving from misuse and prohibitions

The burner has been built in order to make its operation safe; there are, however, residual risks.

Do not touch any mechanical moving parts with your hands or any other part of your body. Injury hazard
Do not touch any parts containing fuel (i.e. tank and pipes). Scalding hazard
Do not use the burner in situations other than the ones provided for in the data plate.
Do not use fuels other than the ones stated.
Do not use the burner in potentially explosive environments.
Do not remove or by-pass any machine safety devices.
Do not remove any protection devices or open the burner or any other component while the burner is running.
Do not disconnect any part of the burner or its components while the burner is running.
Untrained staff must not modify any linkages.

After any maintenance, it is important to restore the protection devices before restarting the machine.
All safety devices must be kept in perfect working order.
Personnel authorized to maintain the machine must always be provided with suitable protections.

ATTENTION: while running, the parts of the burner near the generator (coupling flange) are subject to overheating. Where necessary, avoid any contact risks by wearing suitable PPE.

PART I: INSTALLATION

Burner model identification

Burners are identified by burner type and model. Burner model identification is described as follows.

Type	**LX72**	Model	**M-.**	**AB.**	**S.**	**.***	**A.**	**0.**	**50**
	(1)		(2)	(3)	(4)	(5)	(6)	(7)	(8)

(1)	BURNER TYPE	**LX60 - LX65 - LX72**
(2)	FUEL	M - Natural gas
(3)	OPERATION (Available versions)	PR - Progressive MD - Fully modulating AB - Double stage
(4)	BLAST TUBE	S - Standard L - Extended
(5)	DESTINATION COUNTRY	* - see data plate
(6)	BURNER VERSION	A - Standard
(7)	EQUIPMENT	0 = 2 gas valves 1 = 2 gas valves + gas proving system 8 = 2 gas valves + gas proving system + maximum gas pressure switch
(8)	GAS CONNECTION see Specifications	40 = Rp1 1/2 50 = Rp2 65 = DN65 80 = DN80

Specifications

BURNERS		**LX60 M-...0.40**	**LX60 M-...0.50**	**LX60 M-...0.65**	**LX65 M-...0.50**	**LX65 M-...0.65**	**LX72 M-...0.50**	**LX72 M-...0.65**	**LX72 M-...0.80**
Output	min. - max kW	165 - 720			245 - 760			241 - 1040	
Fuel		Natural gas							
Gas category		(see next paragraph)							
Gas rate	min.- max Stm^3/h	17.5 - 76			26 - 80			25.5 - 110	
Gas pressure	min. - max. mbar	(see Note 2)							
Protection		IP40							
Approx. weight	kg	58	58	65	80	95	85	105	115
Operation		Two stages - Progressive - Fully modulating							
Valves size / Gas connection		1"1/2 / Rp1 1/2	2" / Rp2	2"1/2 / DN65	2" / Rp2	2"1/2 / DN65	2" / Rp2	2"1/2 / DN65	3" / DN80
Operating temperature	°C	-10 ÷ +50							
Storage Temperature	°C	-20 ÷ +60							
Working service*		Intermitent							

Electrical data 50 Hz

Possible voltages, check the actual three-phase and single-phase supply voltage on the burner data plate.

Power supply triphase	V	230 / 400 3 a.c.							
	V	115 2 a.c. / 220 2 a.c. / 230 1N a.c.							
	Hz	50							
Total power consumption	kW	1.6	1.6	1.6	2	2	2	2.7	2.7
Electric motor	kW	1.1	1.1	1.1	1.5	1.5	1.5	2.2	2.2

Electrical data 60 Hz

Possible voltages, check the actual three-phase and single-phase supply voltage on the burner data plate.

Power supply triphase	V	220 / 230 / 265 / 277 / 380 / 440 / 460 / 480 / 525 3 a.c.							
	V	110 / 120 / 230 2 a.c.							
	Hz	60							
Total power consumption	kW	1.82	1.82	1.82	2.3	2.3	2.3	3.14	3.14
Electric motor	kW	1.32	1.32	1.32	1.8	1.8	1.8	2.64	2.64

Note1:	**All gas flow rates are referred to Stm^3/h (1013 mbar absolute pressure, 15 °C temperature) and are valid for G20 gas (net calorific value H_i = 34.02 MJ/Stm^3);**
Note2:	**Maximum gas pressure = 360mbar (with Dungs MBDLE)** **Maximum gas pressure = 500mbar (with Siemens VGD)** **Minimum gas pressure = see gas curves.**

*** NOTE ON THE WORKING SERVICE: the control box automatically stops after 24h of continuous working. The control box immediately starts up, automatically.**

Country and usefulness gas categories

GAS CATEGORY	COUNTRY																								
I_{2H}	AT	ES	GR	SE	FI	IE	HU	IS	NO	CZ	DK	GB	IT	PT	CY	EE	LV	SI	MT	SK	BG	LT	RO	TR	CH
I_{2E}	LU	PL	-	-	-	-	-	-	-	-	-	-	-	-	-	-	-	-	-	-	-	-	-	-	-
$I_{2E(R)B}$	BE	-	-	-	-	-	-	-	-	-	-	-	-	-	-	-	-	-	-	-	-	-	-	-	-
(*) I_{2EK}	NL	-	-	-	-	-	-	-	-	-	-	-	-	-	-	-	-	-	-	-	-	-	-	-	-
I_{2ELL}	DE	-	-	-	-	-	-	-	-	-	-	-	-	-	-	-	-	-	-	-	-	-	-	-	-
I_{2Er}	FR	-	-	-	-	-	-	-	-	-	-	-	-	-	-	-	-	-	-	-	-	-	-	-	-

(*) Only for I_{2EK} : the appliance was configured for the appliance category K (I2K) and is suitable for the use of G and G+ distribution gases according to the specifications as included in the NTA 8837:2012 Annex D with a Wobbe index of 43.46 – 45.3 MJ/m3 (dry, 0 °C, upper value) or 41.23 – 42.98 (dry, 15 °C, upper value). This appliance can moreover be converted and/or be calibrated for the appliance category E (I2E). This therefore implies that the appliance "is suitable for G+ gas and H gas or is demonstrably suitable for G+ gas and can demonstrably be made suitable for H gas" within the meaning of the "Dutch Decree of 10 May 2016 regarding amendment of the Dutch Gas Appliances Decree and the Dutch Commodities (Administrative Fines) Act in connection with the changing composition of gas in the Netherlands as well as technical amendment of some other decrees.

The values in the diagrams refer to **natural gas** with a calorific value of 8125 kcal/Stm^3 (15°C, 1013 mbar) and a density of 0.714 kg/Stm^3 .

The values in the diagrams refer to **GPL** with a calorific value of 22300 kcal/Stm^3 (15°C, 1013 mbar) and a density of 2.14 kg/Stm^3. When the calorific value and the density change, the pressure values should be adjusted accordingly.

$$\Delta p2 = \Delta p1 \quad * \left(\frac{Q2}{Q1}\right)^2 * \left(\frac{\rho 2}{\rho 1}\right)$$

Where:

$p1$	Natural gas pressure shown in diagram
$p2$	Real gas pressure
$Q1$	Natural gas flow rate shown in diagram
$Q2$	Real gas flow rate
$\rho 1$	Natural gas density shown in diagram
$\rho 2$	Real gas density

Matching the burner to the boiler

The burners described in this manual have been tested with combustion chambers that comply with EN676 regulation and whose dimensions are described in the diagram . In case the burner must be coupled with boilers with a combustion chamber smaller in diameter or shorter than those described in the diagram, please contact the supplier, to verify that a correct matching is possible, with respect of the application involved. To correctly match the burner to the boiler verify the type of the blast tube . Verify the necessary input and the pressure in combustion chamber are included in the burner performance curve; otherwise the choice of the burner must be revised consulting the burner manufacturer.

- Cast-iron boilers, three pass flue boilers (with the first pass in the rear part): the blast tube must protrude about 150÷200 mm into the combustion chamber (Fig. 1).

The length of the blast tubes does not always allow this requirement to be met, and thus it may be necessary to use a suitably-sized spacer to move the burner backwards (Fig. 2).

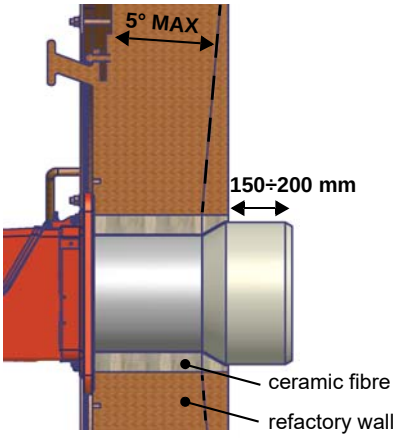

Fig. 1

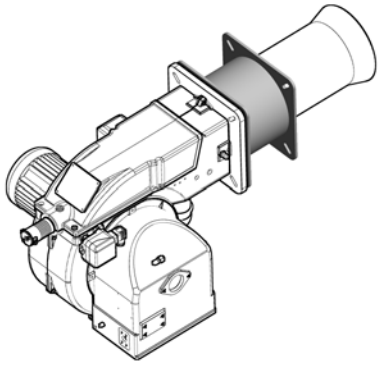
Fig. 2

ATTENTION! Carefully seal the free space between blast tube and the refractory lining with ceramic fibre rope or other suitable means.

The length of the blast tubes does not always allow this requirement to be met, and thus it may be necessary to use a suitably-sized spacer to move the burner backwards or to design a blast tube tha suites the utilisation (please, contact the manifacturer).

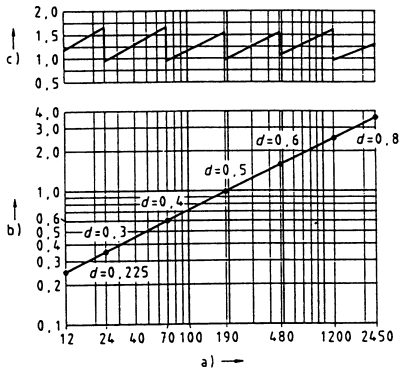

Fig. 3

Key

a) Heat output in kW

b) Lenght of the flame tube in meters

c) Flame tube firing intensity in MW/m^3

d) Combustion chamber diameter (m)

Fig. 3 - Firing intensity, diameter and lenght of the test flame tube as a function of the heat input in kW.

Overall dimensions (mm)

LX60

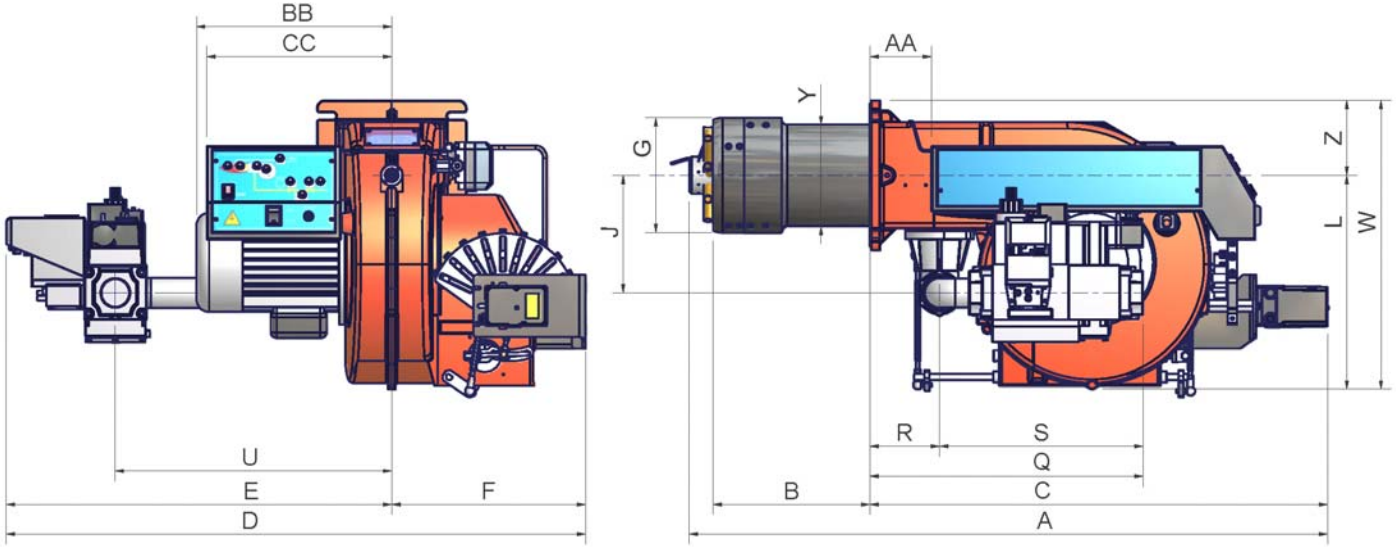

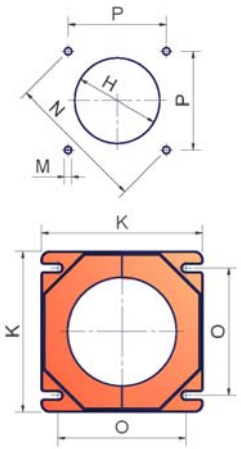

Boiler's drilling plate and burner's flange

	DN	A(S*)	A(L*)	AA	B(S*)	B(L*)	BB	C	CC	D	E	F	G	H	J	K	L	M	N	O - min	O - max	P	Q	R	S	U	V	W	Y	Z
LX60 PR - 0.40	40	1026	1206	99	252	432	314	736	298	812	500	312	185	204	210	240	344	M10	269	190	190	190	439	112	327	444	x	464	162	120
LX60 MD - 0.40	40	1026	1206	99	252	432	314	736	298	812	500	312	185	204	210	240	344	M10	269	190	190	190	439	112	327	444	x	464	162	120
LX60 AB - 0.40	40	956	1136	99	252	432	314	666	298	812	500	312	185	204	210	240	344	M10	269	190	190	190	439	112	327	444	x	464	162	120
LX60 PR - 0.50	50	1026	1206	99	252	432	314	736	298	812	500	312	185	204	210	240	344	M10	269	190	190	190	447	112	335	444	x	464	162	120
LX60 MD - 0.50	50	1026	1206	99	252	432	314	736	298	812	500	312	185	204	210	240	344	M10	269	190	190	190	447	112	335	444	x	464	162	120
LX60 AB - 0.50	50	956	1136	99	252	432	314	666	298	812	500	312	185	204	210	240	344	M10	269	190	190	190	447	112	335	444	x	464	162	120
LX60 PR - 0.65	65	1026	1206	99	252	432	314	736	298	997	685	312	185	204	250	240	420	M10	269	190	190	190	515	112	403	540	313	540	162	120
LX60 MD - 0.65	65	1026	1206	99	252	432	314	736	298	997	685	312	185	204	250	240	420	M10	269	190	190	190	515	112	403	540	313	540	162	120
LX60 AB - 0.65	65	956	1136	99	252	432	314	666	298	997	685	312	185	204	250	240	420	M10	269	190	190	190	515	112	403	540	313	540	162	120

*S = measure referred to burner fitted with standard blast tube

*L = measure referred to burner fitted with extended blast tube
Note: the gas proving system is an option.

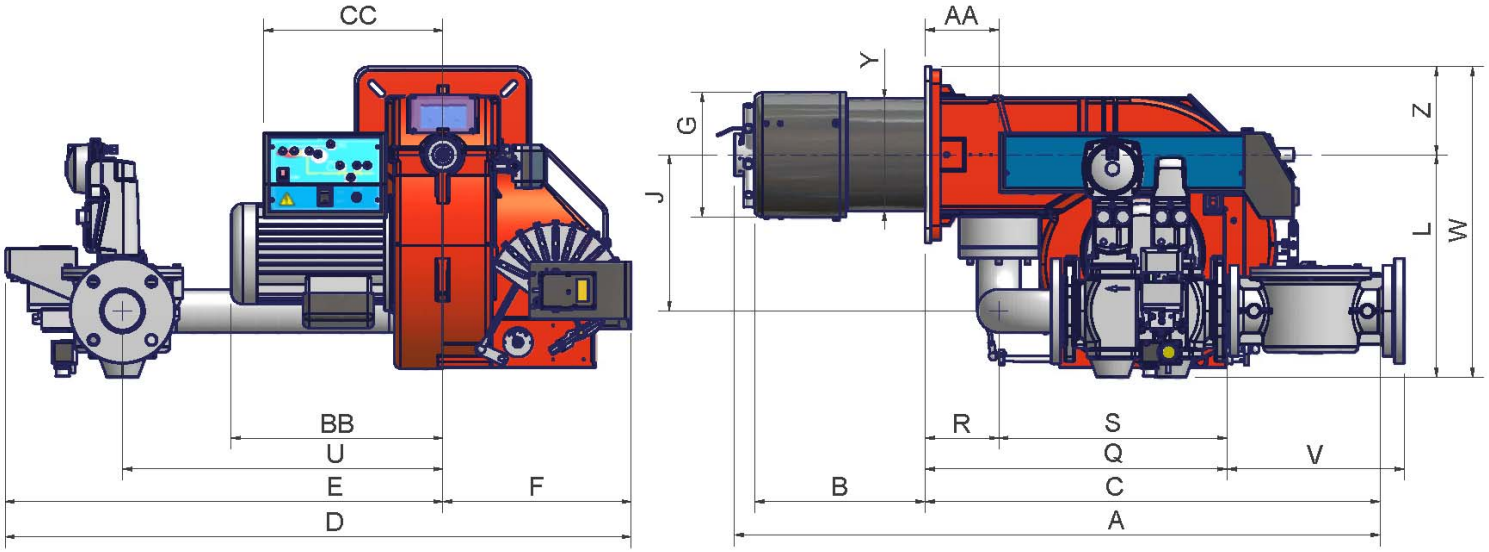

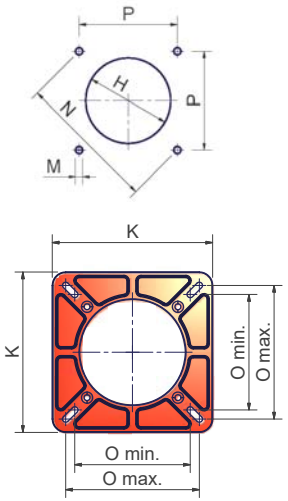

Boiler's drilling plate and burner's flange

	DN	A(S*)	A(L*)	AA	B(S*)	B(L*)	BB	C	CC	D	E	F	G	H	J	K	L	M	N	Omin	Omax	P	Q	R	S	U	V	W	Y	Z
LX65 PR - 0.50	50	1166	1256	130	326	416	373	803	316	900	568	332	185	228	208	300	376	M10	330	216	250	233	465	130	335	519	x	531	162	155
LX65 PR - 1.50	50	1166	1256	130	326	416	373	803	316	1026	694	332	185	228	208	300	376	M10	330	216	250	233	465	130	335	519	x	531	162	155
LX65 AB - 0.50	50	1096	1186	130	326	416	373	733	316	900	568	332	185	228	208	300	376	M10	330	216	250	233	465	130	335	519	x	531	162	155
LX65 AB - 1.50	50	1096	1186	130	326	416	373	733	316	1026	694	332	185	228	208	300	376	M10	330	216	250	233	465	130	335	519	x	531	162	155
LX65 MD - 0.50	50	1166	1256	130	326	416	373	803	316	900	568	332	185	228	208	300	376	M10	330	216	250	233	465	130	335	519	x	531	162	155
LX65 MD - 1.50	50	1166	1256	130	326	416	373	803	316	1026	694	332	185	228	208	300	376	M10	330	216	250	233	465	130	335	519	x	531	162	155
LX65 PR - 0.65	65	1166	1256	130	326	416	373	803	316	998	666	332	185	228	275	300	393	M10	330	216	250	233	533	130	403	565	313	548	162	155
LX65 PR - 1.65	65	1166	1256	130	326	416	373	803	316	1104	772	332	185	228	275	300	393	M10	330	216	250	233	533	130	403	565	313	548	162	155
LX65 AB - 0.65	65	1096	1186	130	326	416	373	733	316	998	666	332	185	228	275	300	393	M10	330	216	250	233	533	130	403	565	313	548	162	155
LX65 AB - 1.65	65	1096	1186	130	326	416	373	733	316	1104	772	332	185	228	275	300	393	M10	330	216	250	233	533	130	403	565	313	548	162	155
LX65 MD - 0.65	65	1166	1256	130	326	416	373	803	316	998	666	332	185	228	275	300	393	M10	330	216	250	233	533	130	403	565	313	548	162	155
LX65 MD - 1.65	65	1166	1256	130	326	416	373	803	316	1104	772	332	185	228	275	300	393	M10	330	216	250	233	533	130	403	565	313	548	162	155

*S = measure referred to burner fitted with standard blast tube

*L = measure referred to burner fitted with extended blast tube

Note: the gas proving system is an option.

	DN	A(S*)	A(L*)	AA	B(S*)	B(L*)	BB	C	CC	D	E	F	G	H	J	K	L	M	N	Omin	Omax	P	Q	R	S	U	V	W	Y	Z
LX72 PR - 0.50	50	1139	1224	130	300	385	373	803	316	900	568	332	219	249	208	300	376	M10	330	216	250	233	465	130	335	519	x	531	198	155
LX72 PR - 1.50	50	1139	1224	130	300	385	373	803	316	1026	694	332	219	249	208	300	376	M10	330	216	250	233	465	130	335	519	x	531	198	155
LX72 AB - 0.50	50	1069	1154	130	300	385	373	733	316	900	568	332	219	249	208	300	376	M10	330	216	250	233	465	130	335	519	x	531	198	155
LX72 AB - 1.50	50	1069	1154	130	300	385	373	733	316	1026	694	332	219	249	208	300	376	M10	330	216	250	233	465	130	335	519	x	531	198	155
LX72 MD - 0.50	50	1139	1224	130	300	385	373	803	316	900	568	332	219	249	208	300	376	M10	330	216	250	233	465	130	335	519	x	531	198	155
LX72 MD - 1.50	50	1139	1224	130	300	385	373	803	316	1026	694	332	219	249	208	300	376	M10	330	216	250	233	465	130	335	519	x	531	198	155
LX72 PR - 0.65	65	1139	1224	130	300	385	373	803	316	998	666	332	219	249	275	300	393	M10	330	216	250	233	533	130	403	565	313	548	198	155
LX72 PR - 1.65	65	1139	1224	130	300	385	373	803	316	1104	772	332	219	249	275	300	393	M10	330	216	250	233	533	130	403	565	313	548	198	155
LX72 AB - 0.65	65	1069	1154	130	300	385	373	733	316	998	666	332	219	249	275	300	393	M10	330	216	250	233	533	130	403	565	313	548	198	155
LX72 AB - 1.65	65	1069	1154	130	300	385	373	733	316	1104	772	332	219	249	275	300	393	M10	330	216	250	233	533	130	403	565	313	548	198	155
LX72 MD - 0.65	65	1139	1224	130	300	385	373	803	316	998	666	332	219	249	275	300	393	M10	330	216	250	233	533	130	403	565	313	548	198	155
LX72 MD - 1.65	65	1139	1224	130	300	385	373	803	316	1104	772	332	219	249	275	300	393	M10	330	216	250	233	533	130	403	565	313	548	198	155
LX72 PR - 0.80	80	1139	1224	130	300	385	373	803	316	998	666	332	219	249	275	300	407	M10	330	216	250	233	574	130	444	565	344	562	198	155
LX72 PR - 1.80	80	1139	1224	130	300	385	373	803	316	1106	774	332	219	249	275	300	407	M10	330	216	250	233	574	130	444	565	344	562	198	155
LX72 AB - 0.80	80	1069	1154	130	300	385	373	733	316	998	666	332	219	249	275	300	407	M10	330	216	250	233	574	130	444	565	344	562	198	155
LX72 AB - 1.80	80	1069	1154	130	300	385	373	733	316	1106	774	332	219	249	275	300	407	M10	330	216	250	233	574	130	444	565	344	562	198	155
LX72 MD - 0.80	80	1139	1224	130	300	385	373	803	316	998	666	332	219	249	275	300	407	M10	330	216	250	233	574	130	444	565	344	562	198	155
LX72 MD - 1.80	80	1139	1224	130	300	385	373	803	316	1106	774	332	219	249	275	300	407	M10	330	216	250	233	574	130	444	565	344	562	198	155

*S = measure referred to burner fitted with standard blast tube
*L = measure referred to burner fitted with extended blast tube
Note: the gas proving system is an option.

Performance curves

LX60 M-...40/50/65..

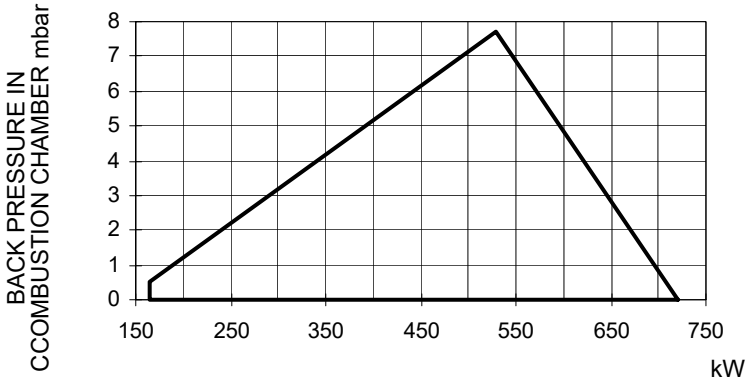

LX65

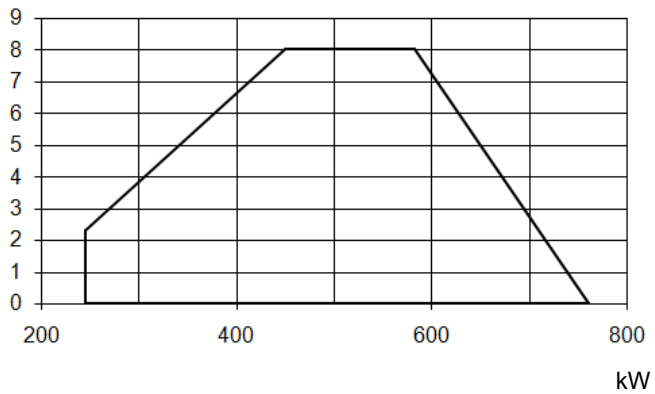

LX72

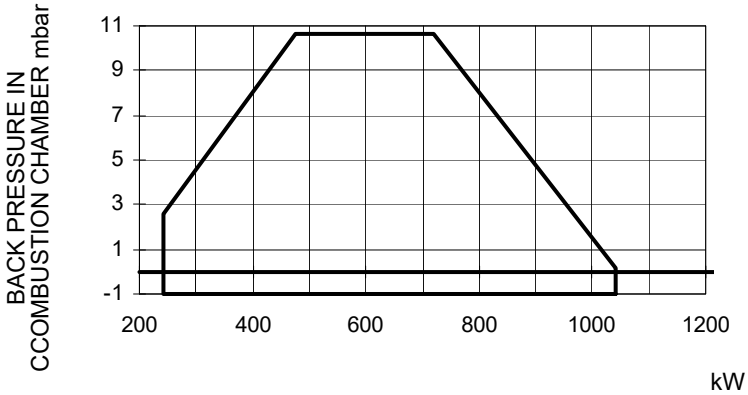

To get the input in kcal/h, multiply value in kW by 860.

Data are referred to standard conditions: atmospheric pressure at 1013mbar, ambient temperature at 15°C.

Pressure in the network/gas rate curves

LX60 M-...40..

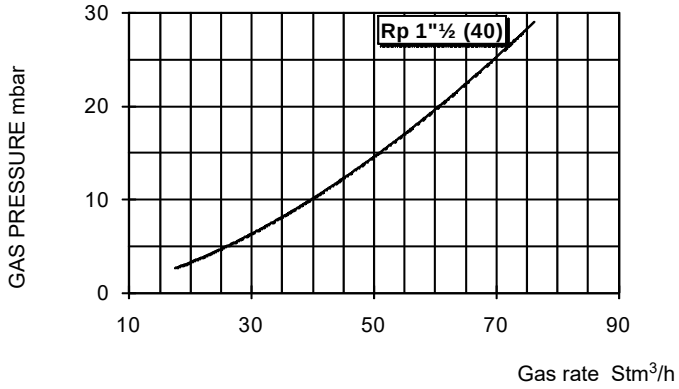

LX60 M-...50/65..

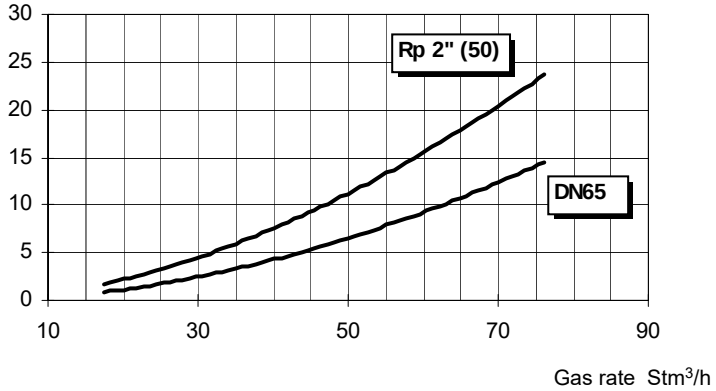

LX65

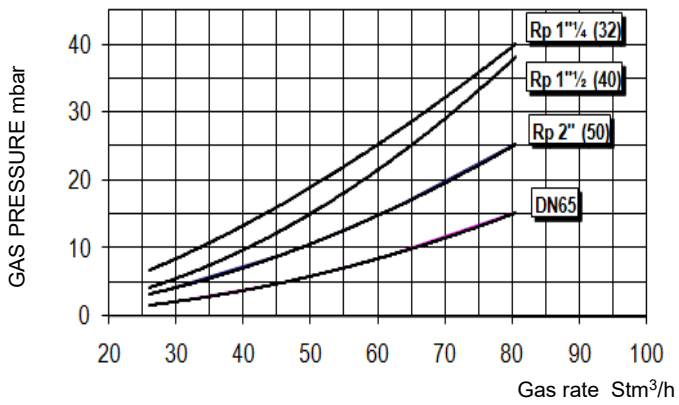

LX72

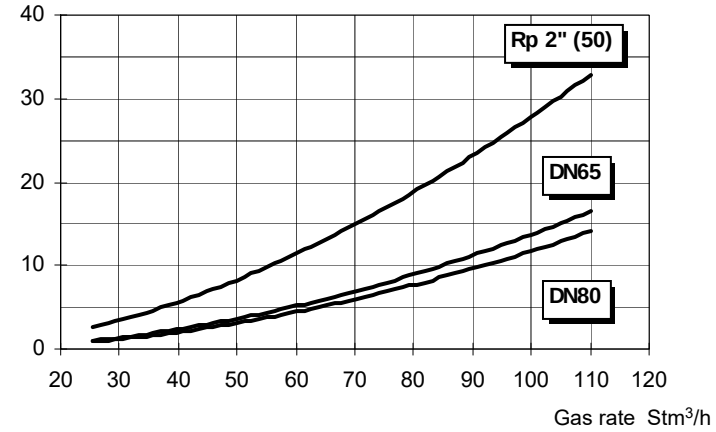

MOUNTINGS AND CONNECTIONS

Packing

Burners are despatched in cardboard packages whose dimensions are:

- LX60: 1200mm x 670mm x 540mm (L x P x H).
- LX65 - LX72: 1280mm x 850mm x 760mm (L x P x H).

Packing cases of this type are affected by humidity; the maximum number of cases to be stacked is shown outside the packing.The following are placed in each packing case.

1 burner with gas train;
1 gasket to be inserted between the burner and the boiler;
1 envelope containing this manual

To get rid of the burner's packing, follow the procedures laid down by current laws on disposal of materials.

Fitting the burner to the boiler

To install the burner into the boiler, proceed as follows:

1 make a hole on the closing door of the combustion chamber as described on paragraph "Overall dimensions")
2 place the burner to the boiler: lift it up and handle it according to the procedure described on paragraph "Handling the burner";
3 place the 4 stud bolts (5) on boiler's door, according to the burner drilling template described on paragraph "Overall dimensions";
4 fasten the 4 stud bolts;
5 place the gasket on the burner flange;
6 install the burner into the boiler;
7 fix the burner to the stud bolts, by means of the fixing nuts, according to the next picture.
8 After fitting the burner to the boiler, ensure that the gap between the blast tube and the refractory lining is sealed with appropriate insulating material (ceramic fibre cord or refractory cement).

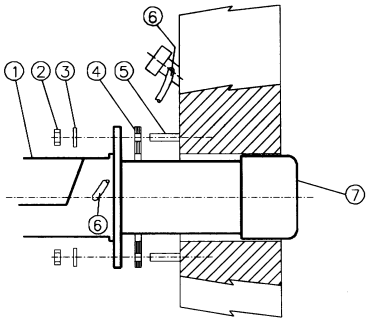

Keys

1 Burner
2 Fixing nut
3 Washer
4 Sealing gasket
5 Stud bolt
7 Blast tube

GAS TRAIN CONNECTIONS

The next figures show the gas train components wich are included in the delivery and those wich must be fitted by the customer. The diagram complies with regulations in force

⚠	**ATTENTION:** BEFORE EXECUTING THE CONNECTIONS TO THE GAS PIPE NETWORK, BE SURE THAT THE MANUAL CUTOFF VALVES ARE CLOSED. READ CAREFULLY THE “WARNINGS” CHAPTER AT THE BEGINNING OF THIS MANUAL.

Rp1 1/2: Gas train with valves group MB-DLE (2 valves + gas filter + pressure governor + pressure switch) + leakage control VPS504

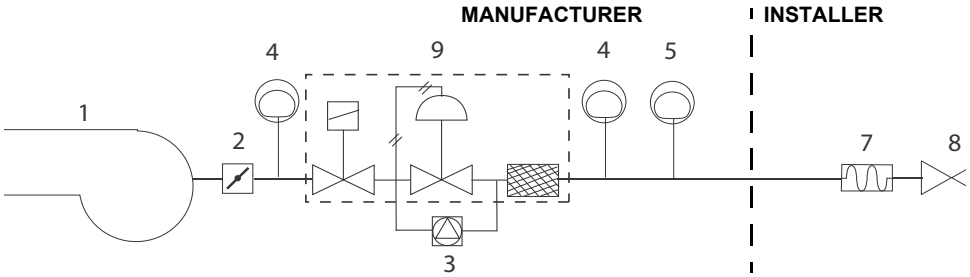

Rp2 - DN65 - DN80: Gas train with valves group VGD with built-in gas pressure governor + gas proving system VPS504

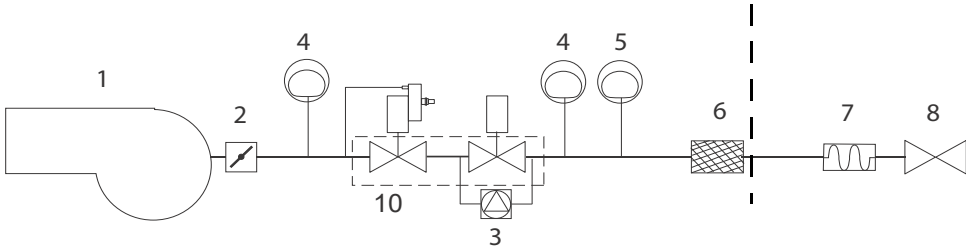

Rp2: Gas train with valves group MBC (2 valves + gas filter + pressure governor) + VPS504 gas proving system

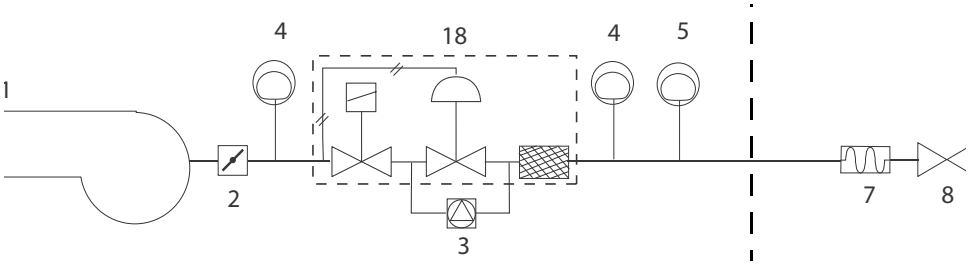

DN65 - DN80: Gas train with valves group MBC (2 valves + pressure governor) + VPS504 gas proving system

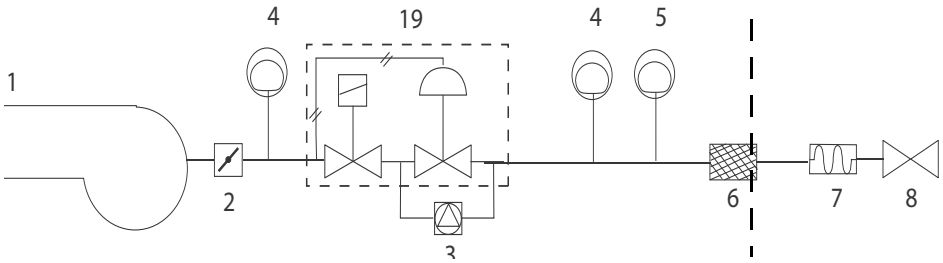

Key

1 Burner
2 Butterfly valve
3 Gas proving system (option)
4 Minimum gas pressure switch
5 Maximum gas pressure switch (option)
6 Gas filter
7 Bellow joint
8 Manual valve
9 MB-DLE Valves group
10 VGD Valves group
18 Valves group MBC (2”, provided with filter)
19 Valves group MBC (an external filter must be installed)

Assembling the gas grain

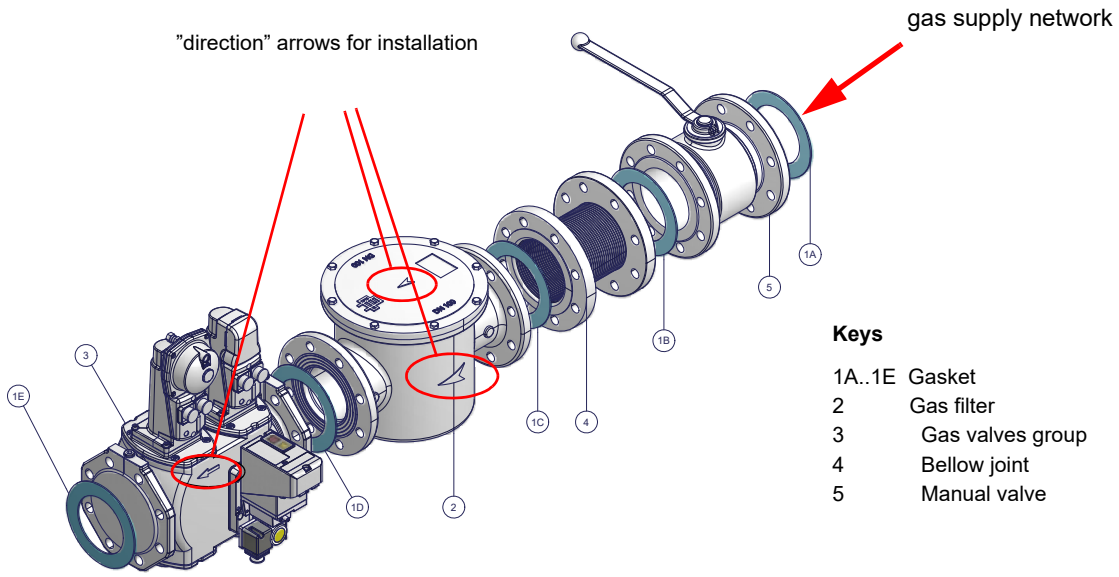

Fig. 2 - Example of gas train

To mount the gas train, proceed as follows:

1-a)in case of threaded joints: use proper seals according to the gas used;

1-b)in case of flanged joints: place a gasket (no. 1A..1E - Fig. 2) between the elements

NOTE: the bellow joint, the manual cock and the gaskets are not part of the standard supply.

⚠	**ATTENTION:** once the gas train is mounted according to the diagram (Fig. 2), the gas proving test mus be performed, according to the procedure set by the laws in force.

The procedures of installation fo the gas valves are showed in the next paragraphs, according to the gas train used:

- threaded gas trains with Multibloc Dungs MBC..SE 1200 or Siemens VGD20..
- flanged gas trains with Multibloc Dungs MBC..SE 1900-3100-5000 or Siemens VGD40..

MULTIBLOC DUNGS MB-DLE 415..420

Mounting

1. Loosen screws A and B **do not** unscrew (Fig. 3 - Fig. 4).
2. unscrew screws C and D (Fig. 3 - Fig. 4).
3. Remove MultiBloc between the threaded flanges (Fig. 4).
4. After mounting, perform leakage and functional tests.

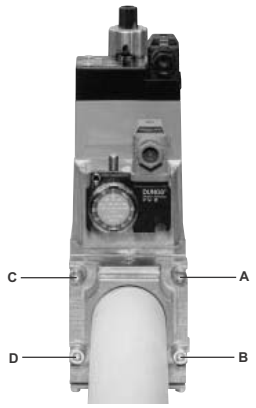

Fig. 3

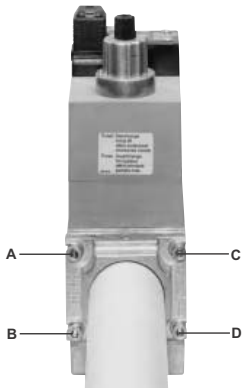

Fig. 4

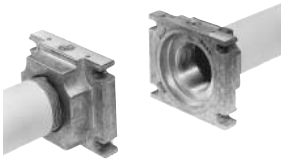

Fig. 5

MOUNTING POSITIONS

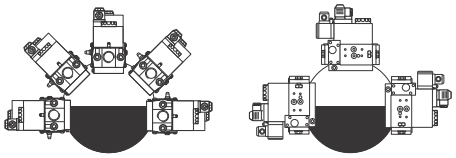

Fig. 6

MULTIBLOC DUNGS MBC300-700-1200SE (Threaded valves group)

Mounting

1. Mount flange onto tube lines. Use appropriate sealing agent (see Fig. 7)
2. Insert MBC...SE. Note position of O rings (see Fig. 8).
3. Tighten screws A – H
4. After installation, perform leakage and functional test.
5. Disassembly in reverse order

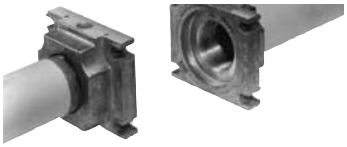

Fig. 7

MOUNTING POSITIONS

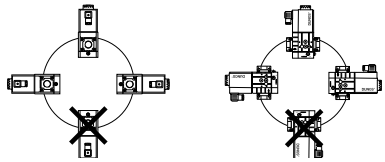

OPTION

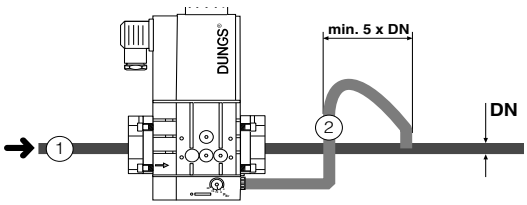

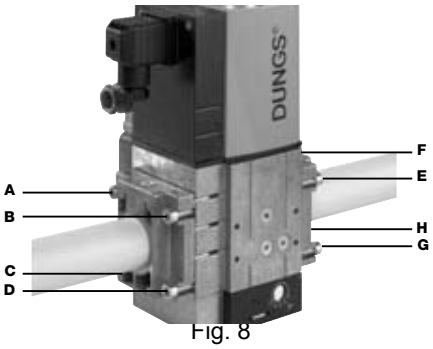

Fig. 8

MULTIBLOCDUNGS MBC1900-3100-5000SE (Flanged valves group)

Mounting

1. Insert setscrews A
2. Insert seals
3. Insert setscrews B
4. Tighten setscrews A + B.

Ensure correct seating of the seal!

6. After installation, perform leakage and functional test.
7. Disassembly in reverse order.

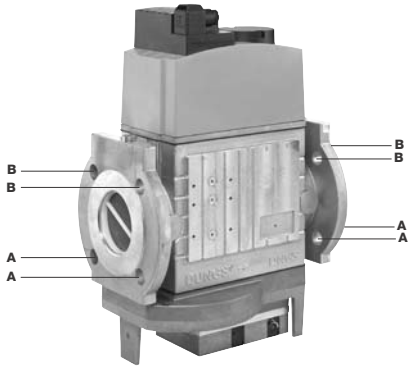

Fig. 9

Mounting positions

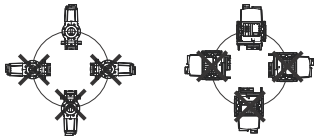

OPTION

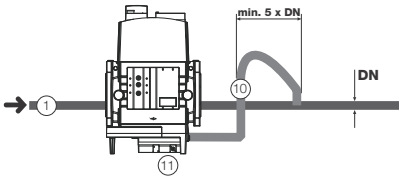

10 = pulse lines

Siemens VGD20.. and VGD40.. gas valves - with SKP2.. (pressure governor)

Mounting

- When mounting the VGD.. double gas valve, two flanges are required (as for VGD20.. model, the flanges are threaded);
- to prevent cuttings from falling inside the valve, first fit the flanges to the piping and then clean the associated parts;
- install the valve;
- the direction of gas flow must be in accordance with the direction of the arrow on the valve body;
- ensure that the bolts on the flanges are properly tightened;
- ensure that the connections with all components are tight;
- make certain that the O-rings and gaskets between the flanges and the double gas valve are fitted.
- Connect the reference gas pipe (**TP** in figure; 8mm-external size pipe supplied loose), to the gas pressure nipples placed on the gas pipe, downstream the gas valves: gas pressure must be measured at a distance that must be at least 5 times the pipe size.

Leave the blowhole free (**SA** in figure). Should the spring fitted not permit satisfactory regulation, ask one of our service centres for a suitable replacement.

⚠ **Caution:** the SKP2 diaphragm **D** must be vertical (see Fig. 12).

WARNING: removing the four screws BS causes the device to be unserviceable!

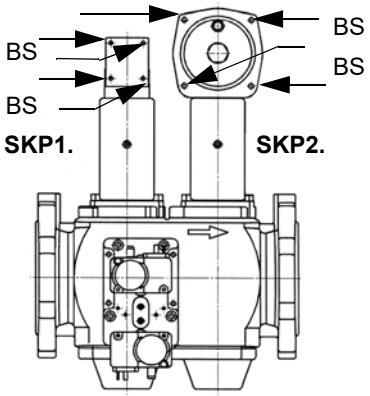

Fig. 10

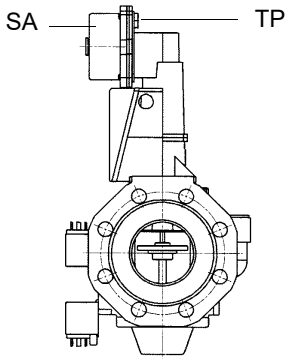

Fig. 11

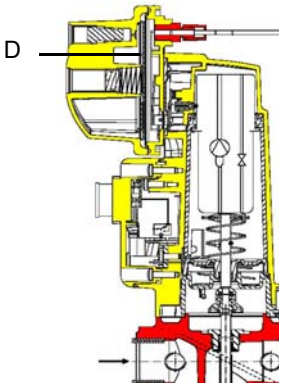

Fig. 12

SIEMENS VGD..MOUNTING POSITIONS

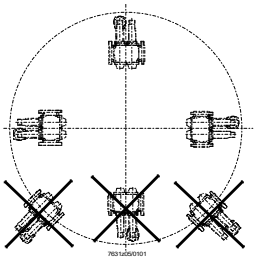

Fig. 13

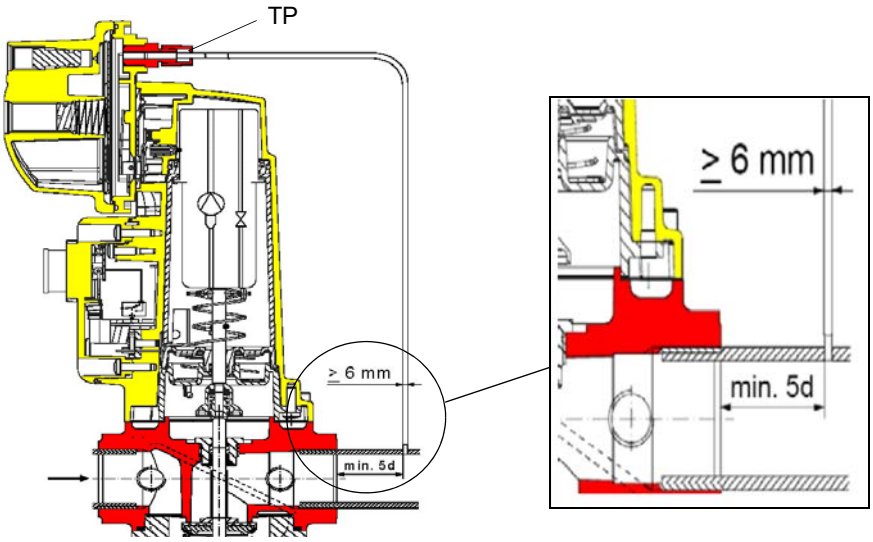

Fig. 14

Pressure adjusting range

The pressure adjusting range, downstream the gas valves group, changes according to the spring provided with the valve group.

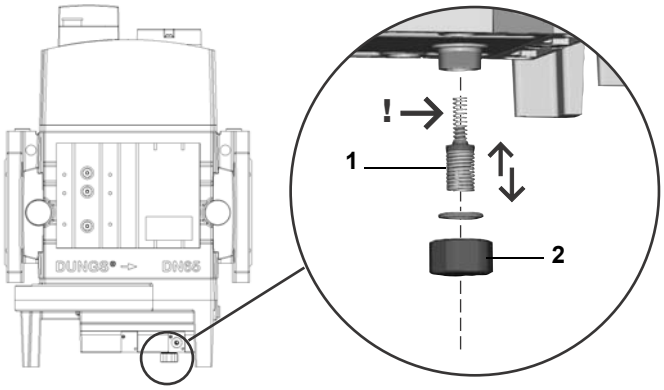

DUNGS MBC..SE

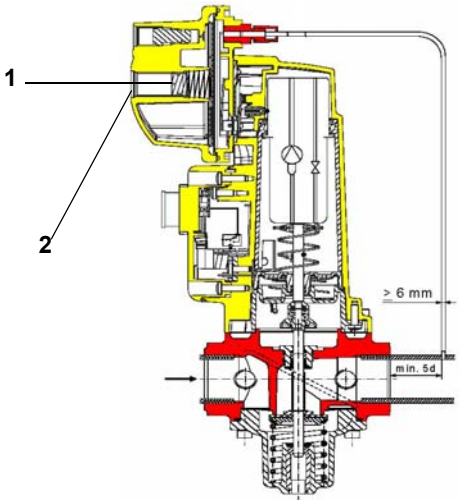

Siemens SKP actuator

Keys

1 spring

2 cap

DUNGS MBC valves:

Performance range (mbar)	4 - 20	20 - 40	40 - 80	80 - 150
Spring colour	-	red	black	green

Siemens VGD valves with SKP actuator :

Performance range (mbar)	0 - 22	15 - 120	100 - 250
Spring colour	neutral	yellow	red

Gas Proving System VPS504

The VPS504 check the operation of the seal of the gas shut off valves. This check, carried out as soon as the boiler thermostat gives a start signal to the burner, creates, by means of the diaphragm pump inside it, a pressure in the test space of 20 mbar higher than the supply pressure.

To install the DUNGS VPS504 gas proving system on the MD-DLE valves group, proceed as follows:

1 turn off gas supply.;
2 Switch off power supply.
3 remove the Multibloc screw plugs (Fig. 15-A);
4 iInsert sealing rings (10,5 x 2,25) into VPS 504 (Fig. 15-B - Fig. 16)
5 Torque screws 3, 4, 5, 6 (M4 x16) Fig. 16-C

Only use screws with metric thread on reassembly (modification, repair).

6 On completion of work, perform a leak and functional test.

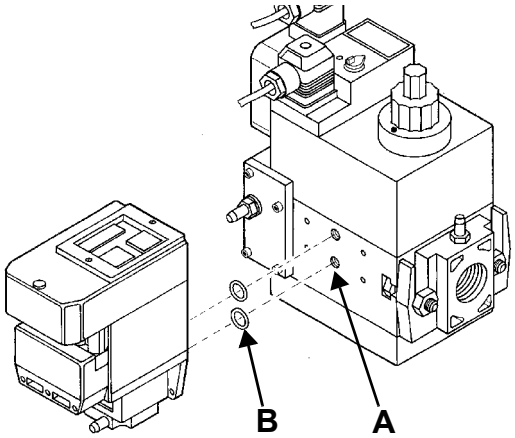

Fig. 15

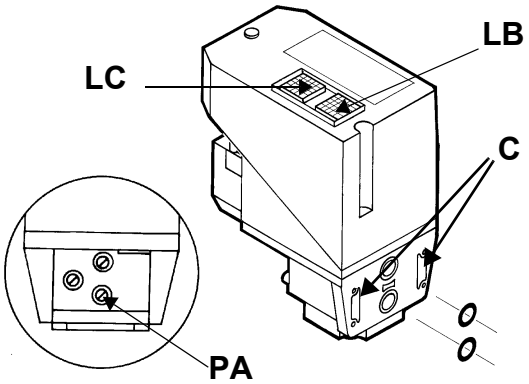

Fig. 16

When wishing to monitor the test, install a pressure gauge ranged to that of the pressure supply point **PA** (Fig. 16). If the test cycle is satisfactory, after a few seconds the consent light **LC** (yellow) comes on. In the opposite case the lockout light **LB** (red) comes on. To restart it is necessary to reset the appliance by pressing the illuminated pushbutton **LB**.

Once the train is installed, connect the gas valves group and pressure switches plugs.

⚠	**ATTENTION:** once the gas train is mounted according to the diagram, the gas proving test mus be performed, according to the procedure set by the laws in force.

ELECTRICAL CONNECTIONS

⚠	**WARNING: The burner is provided with a jumper between terminals 6 and 7; in the event of connecting the high/ low flame thermostat remove this jumper before connecting the thermostat.**
	IMPORTANT: while connecting electric supply wires to burner's teminal block be sure that ground wire should be longer than phase and neutral ones.

⚠	**WARNING: if the cable that connects the thermostats and the control box should be longer than 3 meters, insert a sectioning relay following the attached electrical wiring diagram..**

⚠	**Respect the basic safety rules. make sure of the connection to the earthing system. do not reverse the phase and neutral connections. fit a differential thermal magnet switch adequate for connection to the mains.**
	ATTENTION: before executing the electrical connections, pay attention to turn the plant's switch to OFF and be sure that the burner's main switch is in 0 position (OFF) too. Read carefully the chapter "WARNINGS", and the "Electrical connections" section..

⚠	**WARNING: if the cable that connects the thermostats and the control box should be longer than 3 meters, insert a sectioning relay following the attached electrical wiring diagram.**

- Remove the cover of the burner electrical board.
- Perform the electrical connections to the supply terminal board as shown in Fig. 8, check the direction of the fan motor (see related paragraph) and refit the panel cover.

Wiring diagram keys on page 42.

Note on elecrtical supply

If the power supply to the burner is 230V three-phase or 230V phase-phase (without a neutral), with the Siemens LME2... control box, between the terminal 2 on the board and the earth terminal, an RC Siemens RC466890660 filter must be inserted

Key

C - Capacitor (22nF/250V)
LME - Siemens control box
R - Resistor (1Mohm)
RC466890660 - RC Siemens filter

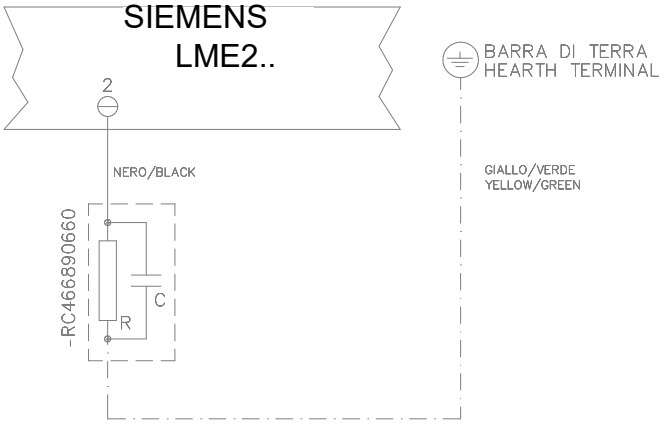

Fig. 17

Connection diagram

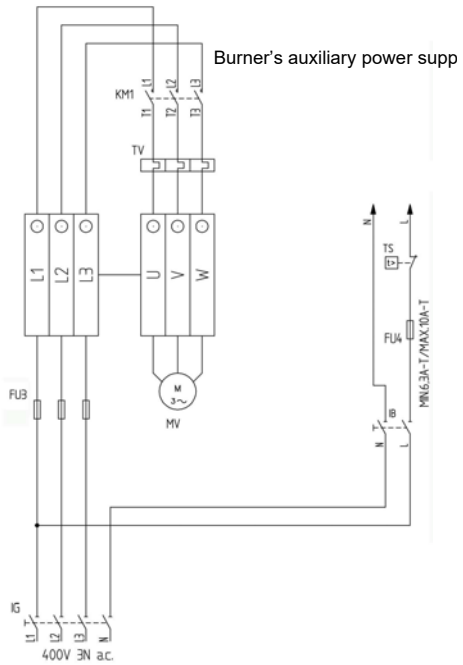

Fig. 18

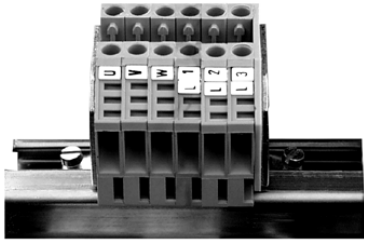

Fig. 20 - Power supply terminal block

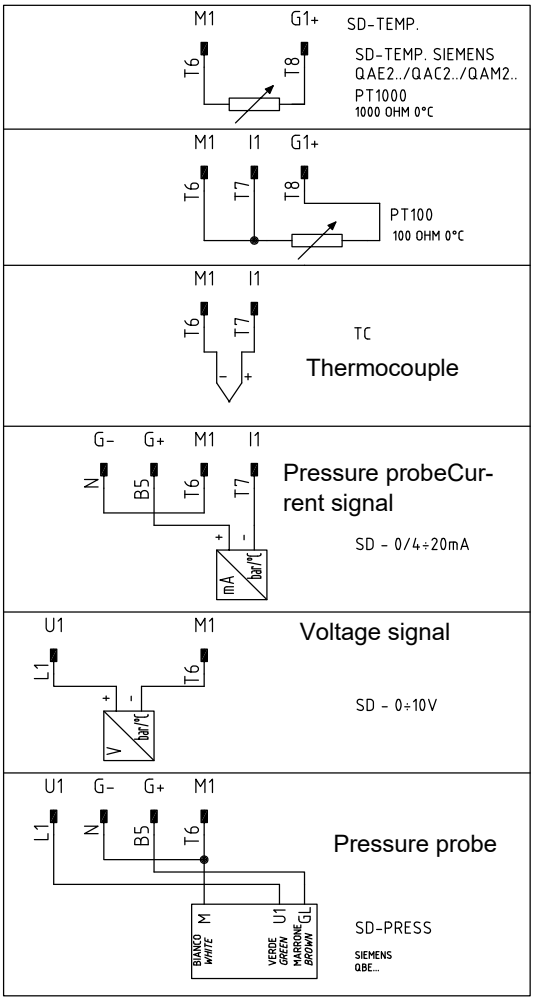

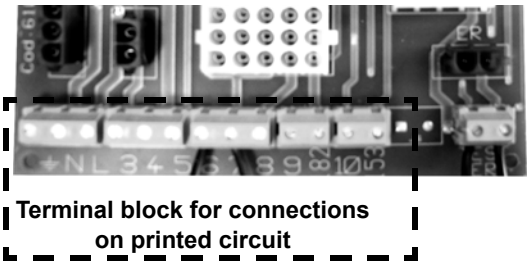

Fig. 21

Fig. 19 - Probes connection scheme for modulating burners

Rotation of fan motor

Once the electrical connection of the burner is executed, remember to check the rotation of the fan motor. The motor should rotate according to the "arrow" symbol on the body. In the event of wrong rotation, reverse the three-phase supply and check again the rotation of the motor.

⚠	**CAUTION: check the motor thermal cut-out adjustment**

NOTE: the burners are supplied for three-phase 400V supply, and in the case of three-phase 230V supply it is necessary to modify the electrical connections into the terminal box of the electric motor and replace the overload tripped relay.

ADJUSTMENTS

Combustion head pressure curves vs. the gas flow rate

Curves are referred to pressure= 0mbar in the combustion head!

The curves referred to the gas pressure in the combustion head, depending on the gas flow rate, are referred to the burner in the combustion stage (percentage of residual O_2 in the flues as shown in the “Recommended combustion values” table and CO in the standard limits). During this stage, the combustion head, the gas butterfly valve and the servocontrol are at the maximum opening. Refer to Fig. 22, showing the correct way to measure the gas pressure, considering the values of pressure in combustion chamber, surveyed by means of the pressure gauge or taken from the boiler’s Technical specifications.

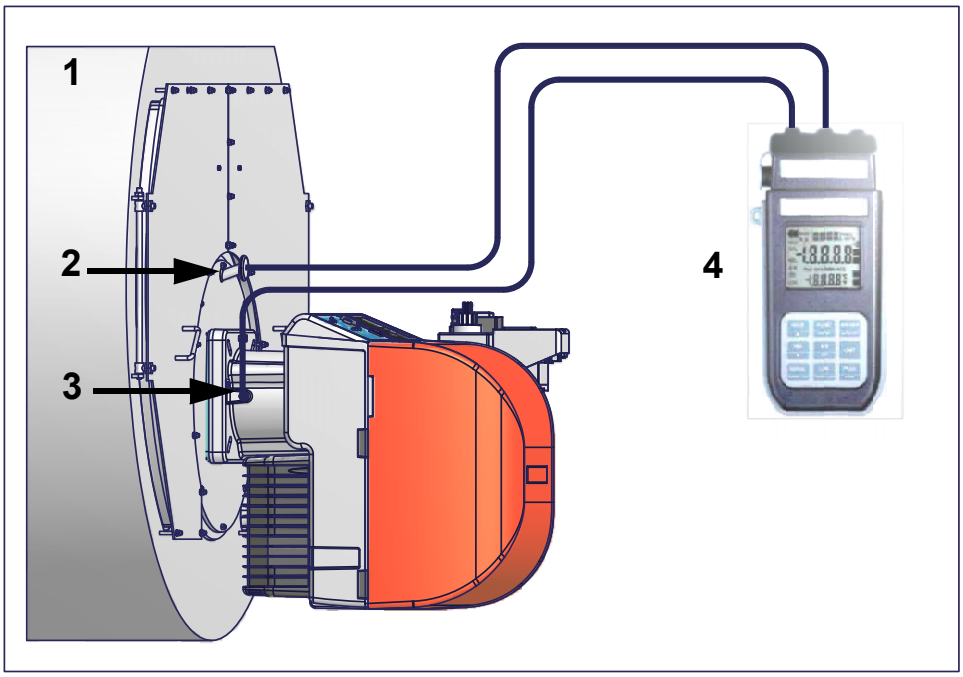

Fig. 22

Key

1 Generator
2 Pressure outlet on the combustion chamber
3 Gas pressure outlet on the butterfly valve
4 Differential pressure gauge

Measuring the gas pressure in the combustion head

In order to measure the pressure in the combustion head, insert the pressure gauge probes: one into the generator’s pressure outlet (Fig. 22-2) to get the pressure in the combustion chamber and the other one into the butterfly valve’s pressure outlet of the burner (Fig. 22-3). On the basis of the measured differential pressure, it is possible to get the maximum flow rate: in the pressure - rate curves (showed on the next paragraph), it is easy to get the burner output in kW or Stm3/h (quoted on the x axis) from the pressure measured in the combustion head (quoted on the y axis).

NOTE: THE PRESSURE-RATE CURVES ARE APPROXIMATE; FOR A PROPER SETTING OF THE GAS RATE, PLEASE REFER TO THE GAS METER READING.

Gas pressure in combustion head vs. gas flow rate curves

LX60

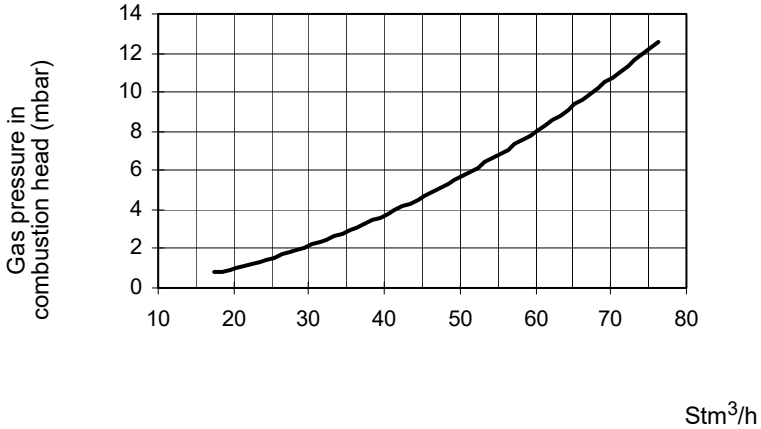

LX65

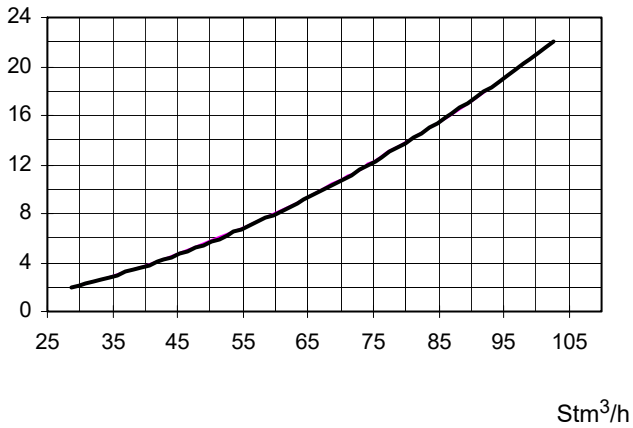

LX72

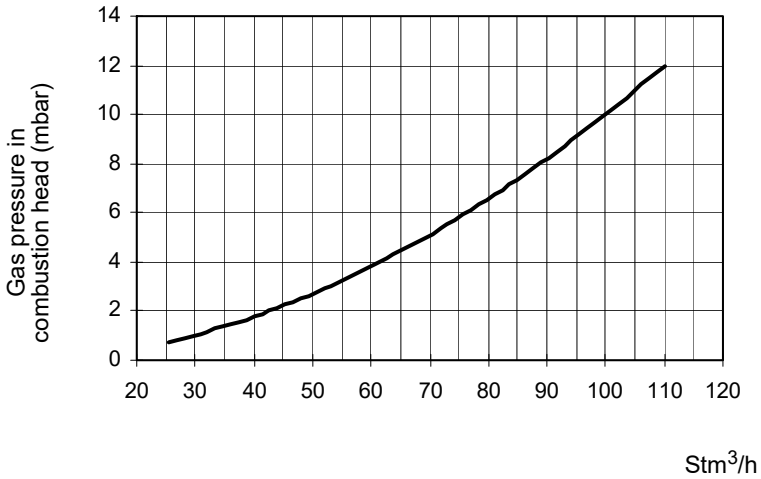

Adjusting air and gas flow rates

⚠	***ATTENTION:*** **before starting the burner up, be sure that the manual cutoff valves are open and check that the pressure upstream the gas train complies the value quoted on paragraph "Technical specifications". Be sure that the mains switch is closed.**
	ATTENTION: During commissioning operations, do not let the burner operate with insufficient air flow (danger of formation of carbon monoxide); if this should happen, make the gas decrease slowly until the normal combustion values are achieved.
	WARNING: NEVER LOOSE THE SEALED SCREWS! OTHERWISE, THE DEVICE WARRANTY WILL BE INVALIDATE!

Startup Output

The start-up heat output shall not exceed 1/3 of nominal output (double-stage, progressive or fully modulating burners). In order to comply with these requirements, burners are provided with butterfly valve and/or slow-opening safety valve. The low flame ouptut must be higher than the minimum ouptut quoted in the performance curve (see "Measuring the gas pressure in the combustion head" on page 21).

⚠	**IMPORTANT! the combustion air excess must be adjusted according to the in the following chart:**

Recommended combustion parameters		
Fuel	***Recommended (%) CO_2***	***Recommended (%) O_2***
Natural gas	9 ÷ 10	3 ÷ 4.8

Adjustments - brief description

- Adjust the air and gas flow rates at the maximum output ("high flame") first, by means of the air damper and the valves group pressure stabiliser respectively.

Check that the combustion parameters are in the suggested limits.

- Check the flow rate measuring it on the counter or, if it is not possible, check the combustion head pressure by means of a differential pressure gauge, see "Measuring the gas pressure in the combustion head" on page 21.
- Then, adjust the combustion values corresponding to the points between maximum and minimum (progressive -fully modulating burners only): set the shape of the adjusting cam foil. The adjusting cam sets the air/gas ratio in those points, regulating the opening-closing of the air damper.
- Set, now, the low flame output, acting on the low flame microswitch of the actuator in order to avoid the low flame output increasing too much or that the flues temperature gets too low to cause condensation in the chimney.

Adjusting procedure

To change the burner setting during the testing in the plant, follows the next procedure, according to the burner operation..

DUNGS MB-DLE gas valves group: Before starting the burner up, adjust the valves group slow opening: to set the slow opening remove cover **T**, reverse it upside down and use it as a toolto rotate screw **VR**. Decrease the ignition flow rate by screwing, increase it by unscrewing. Do not use a screwdriver on the screw **VR**!

Note: the screw **VSB** must be removed only in case of replacemente of the coil.

On the **DUNGS MBC..SE gas valves group,** set the pressure regulator to 1/3 of its stroke, using a 2.5 allen key.

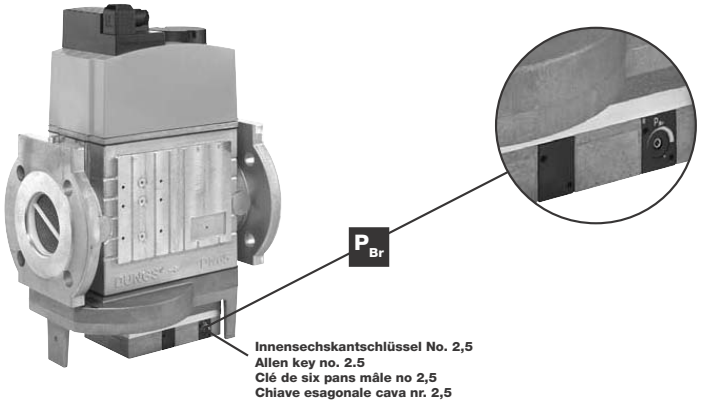

Pressure setting

1 Turn the burner on by means of its main switch **A**: if the burner locks (LED **B** on in the control panel-Fig. 29) press the RESET button (**C**) on the control panel (Fig. 29). See chapter “Operation” for further details.
2 check the fan motor rotation (see “Rotation of fan motor” on page 20)
3 Before starting the burner up, drive the high flame actuator microswitch matching the low flame one (in order to let the burner operates at the lowest output) to safely achieve the high flame stage.
4 Start the burner up by means of the thermostat series and wait unitl the pre-purge phase comes to end and that burner starts up;
5 drive the burner to high flame stage, by means fo the thermostat **TAB**.
6 Then move progressively the microswitch to higher values until it reaches the high flame position; always check the combustion values and eventually adjusting the gas by means of the valves group stabiliser.

The burner is factory-set with the combustion head at the position that refers to the "MAX" output. The maximum output setting refers to “fully-backward” position (Fig. 24). As for “fully-ahead” position, it means that the head is towards the boiler, “fully-backward” position means that the head is towards the operator. As far as the reduced output operation, progressively move the combusiton head towards the “MIN” position by means of the **VRT** screw (Fig. 23). The **ID** index shows how much the combustion head moved..

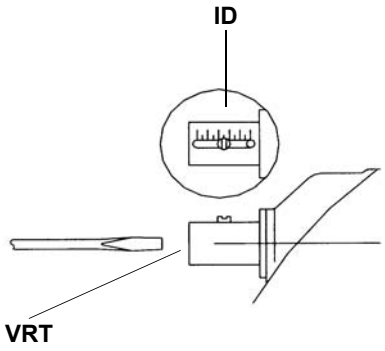

Fig. 23

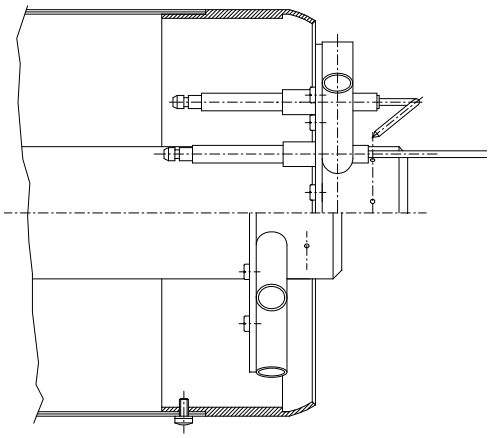

Fig. 24
Fig. 25

Attention! Change the combustion head position only if necessary. If so, repeat the air and gas adjustments described above.

7 go on adjusting air and gas flow rates: check, continuosly, the flue gas analisys, as to avoid combustion with little air; dose the air according to the gas flow rate change following the steps quoted below;
8 acting on the pressure stabiliser of the valves group, adjust the **gas flow rate in the high flame stage** as to meet the values requested from the boiler/utilisation:

- **Multibloc MB-DLE:** the valve is adjusted by means of the **RP** regulator after slackening the locking screw **VB** by a number of turns. By unscrewing the regulator **RP** the valve opens, screwing the valve closes. The pressure stabilizer is adjusted by operating

the screw **VS** located under the cover **C**. By screwing down the pressure is increased and by unscrewing it is reduced. **Note:** the screw **VSB** must be removed only in case of replacemente of the coil.

- Siemens VGD valves group: remove cap **T** and act on the **VR** adjusting screw to increase or decrease the pressure and consequently the gas rate; screwind **VR** the rate increases, unscrewing it decreases (see next figure).

- Dungs MBC..SE valves group: act on its pressure governor to increase or decrease the pressure and consequently the gas rate.

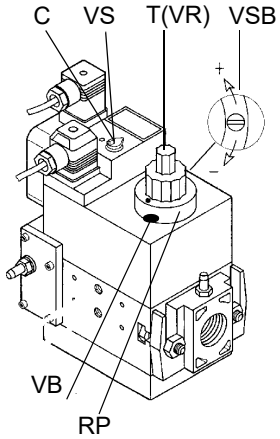

Dungs Multibloc MB-DLE

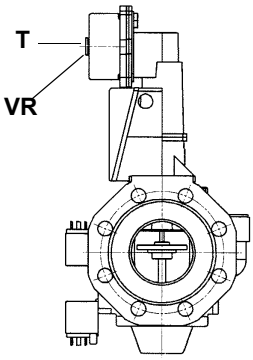

Siemens VGD..

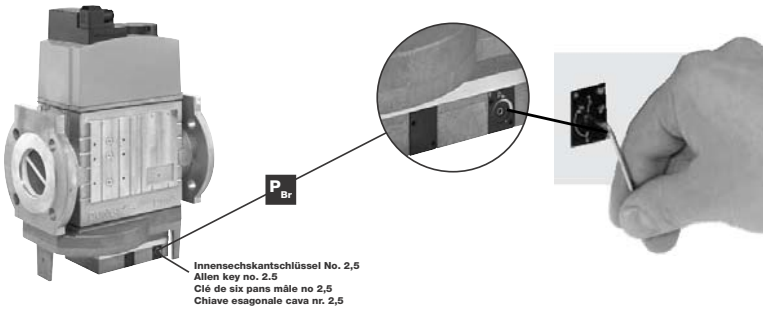

Dungs MBC..SE

⚠ Pressure stabiliser is factory-set. The setting values must be locally adapted to machine conditions. Important! Follow the instructions carefully!

9 .To adjust the **air flow rate in the high flame stage**, loose the **RA** nut and screw **VRA** as to get the desired air flow rate: moving the rod **T** towards the air damper shaft, the air damper opens and consequently the air flow rate increases, moving it far from the shaft the air damper closes and the air flow rate decreases.

Note: once the procedure is perfomed, be sure that the blocking nut **RA** is fasten.

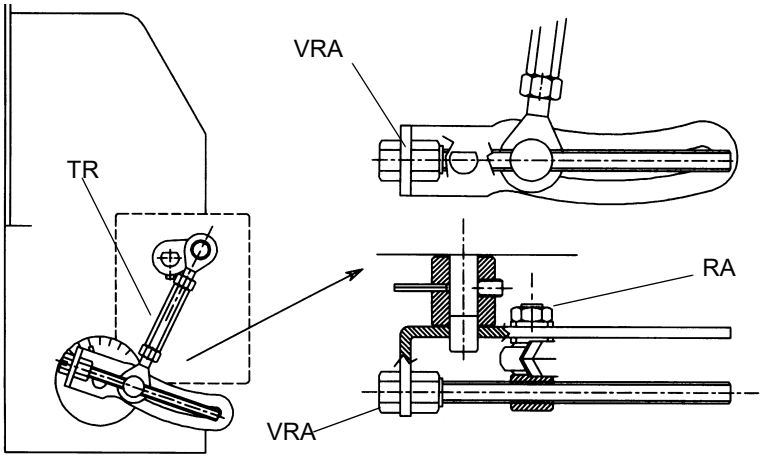

Go on adjusting the burner according to the model (double-stage, progressive, fully-modulating).

Double-stage burners

10 drive the burner to the low flame stage by means of the **TAB** thermostat;

11 In order to change the gas flow rate slacken the nuts **DB** (Fig. 26) and adjust the opening angle of the gas butterfly valve by rotating the rod **TG** (clockwise rotation increases gas flow, anticlockwise rotation decreases it). The slot on the butterfly valve shaft shows the opening degree of the valve regardingthe horizontal axis (Fig. 26).

NOTE: At the end of settings, make sure the locking screws **RA** and **DB** are fully tightened.

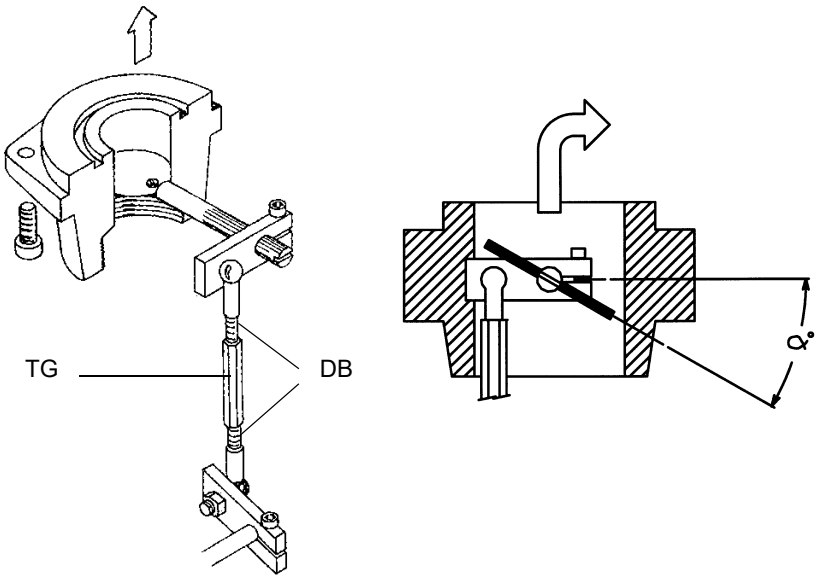

Fig. 26

12 Now adjust the pressure switches (see pag. 28).

13 If it is necessary to change the burner output in the low flame stage, move the low flame cam: the low flame position must never match the ignition position, that is why the low flame cam must be set at about 30° more than the ignition cam (when the low flame does not match the ignition cam - that is when MBC valves are provided).

14 Turn the burner off and then start it up again. If the adjustment is not correct, repeat the previous steps.

Berger STA6 B 3.41 (high-low flame burners)

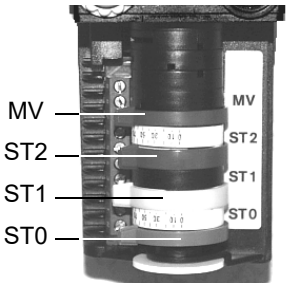

Siemens SQN72.2A4Axx (high-low flame burners)

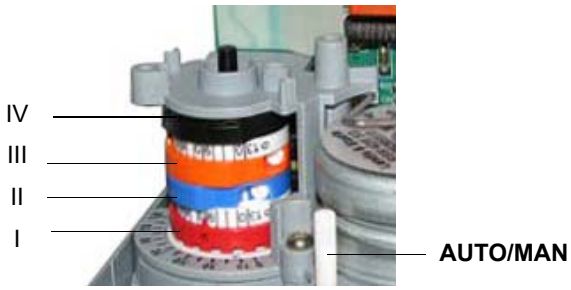

For DUNGS MB-DLE / Siemens VGD gas valves	Actuator camsBerger STA	Siemens SQN72
High flame position (set to 90°)	ST2	I (red)
Low flame and ignition position	ST1	III (orange)
Stand-by position (set to 0°)	ST0	II (blue)
Not used	MV	IV (black)

For DUNGS MBCgas valves	Actuator camsBerger STA	Siemens SQN72
High flame position (set to 90°)	ST2	I (red)
Stand-by position (set to 0°)	ST0	III (orange)
Ignition	ST1	II (blue)
Low flame position	MV	IV (black)

Progressive burners

Once the procedure till step 8 described on paragraph “Adjusting procedure” on page 24 is accomplished, go on as follows:

9 set the **TAB** thermostat to the minimum in order that the actuator moves progressively towards the low flame position;

The manual air damper control is not provided on these actuators. The adjustments must be carried out by inserting a screwdriver on the screw placed inside the cam.

Berger STA6 B 3.41 (high-low flame burners)
Berger STA12B3.41 (progressive and fully modulating burners)

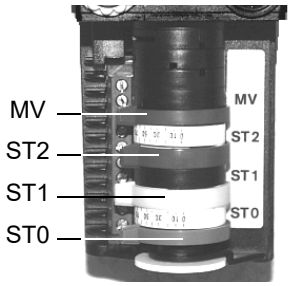

Siemens SQN72.2A4Axx (high-low flame burners)

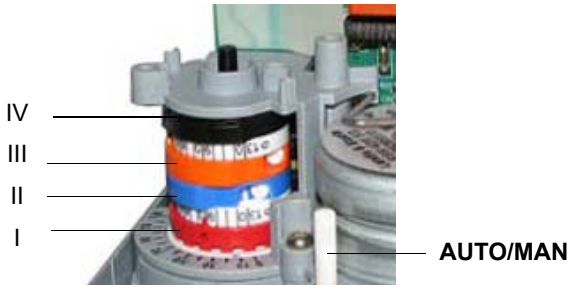

For DUNGS MB-DLE / Siemens VGD gas valves	Actuator camsBerger STA	Siemens SQN72
High flame position (set to 90°)	ST2	I (red)
Low flame and ignition position	ST1	III (orange)
Stand-by position (set to 0°)	ST0	II (blue)
Not used	MV	IV (black)

For DUNGS MBCgas valves	Actuator camsBerger STA	Siemens SQN72
High flame position (set to 90°)	ST2	I (red)
Stand-by position (set to 0°)	ST0	III (orange)
Ignition	ST1	II (blue)
Low flame position	MV	IV (black)

10 move the low flame cam to the minimum to move the actuator towards the low flame until the two bearings find the adjusting screw that refers to the lower position: screw **V** to increase the rate, unscrew to decrease.

11 Move again the low flame cam towards the minimum to meet the next screw on the adjusting cam and repeat the previous step; go on this way as to reach the desired low flame point.

12 Now adjust the pressure switches (see pag. 28).

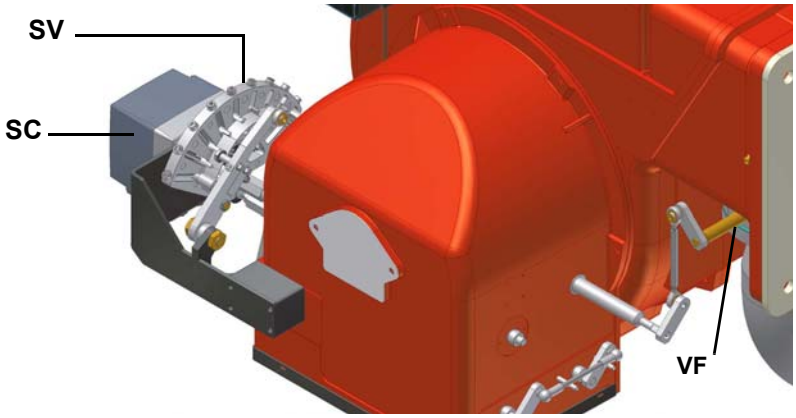

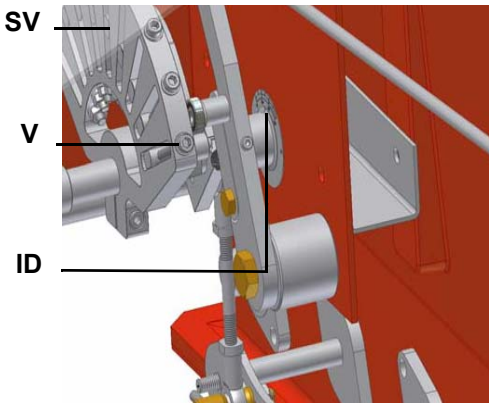

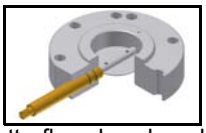

Gas butterfly valve closedт

Gas butterfly valve open

13 If it is necessary to change the burner output in the low flame stage, move the low flame cam: the low flame position must never match the ignition position, that is why the low flame cam must be set at about 30° more than the ignition cam (when the low flame can does not match the ignition cam - that is when MBC valves are provided).

Turn the burner off and then start it up again. If the adjustment is not correct, repeat the previous steps.

Fully modulating burners

Once the procedure till step 8 described on paragraph “Adjusting procedure” on page 24 is accomplished, go on as follows:

To adjust the air rate in low flame and in the intermediate points, proceed as follow.

9 Keep pushed for 5 seconds the EXIT button on the modulator (Fig. 27); when the LED with the hand symbol lights up, press the arrow button, driving the actuator to the maximum opening position progressively;

10 stop its stroke when it meets each screw **V**: adjust the air rate by adjusting the **V** screw that matches each bearing.

11 Push the EXIT button to quit the manual mode.

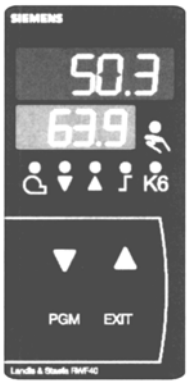

Fig. 27

Fig. 28

Calibration of air and gas pressure switches

The **air pressure switch** locks the control box if the air pressure is not the one requested. If it happens, unlock the burner by means of the control box unlock pushbutton, placed on the burner control panel.

The **gas pressure switches** check the pressure to avoid the burner operate when the pressure value is not in the requested pressure range.

Calibration of air pressure switch

To calibrate the air pressure switch, proceed as follows:

- Remove the transparent plastic cap.
- Once air and gas setting have been accomplished, startup the burner.
- During the pre-purge phase o the operation, turn slowly the adjusting ring nut **VR** in the clockwise direction until the burner lockout, then read the value on the pressure switch scale and set it to a value reduced by 15%.
- Repeat the ignition cycle of the burner and check it runs properly.
- Refit the transparent plastic cover on the pressure switch.

Calibration of low gas pressure switch

As for the gas pressure switch calibration, proceed as follows:

- Remove the transparent plastic cap.
- While the burner is operating at the maximum output, test the gas pressure on the low gas pressure switch port.
- Slowly close the manual shut-off valve (placed upstream the pressure switch, see gas train installation diagram), until the measured pressure is reduced by 50%. Pay attention that the CO value in the flue gas does not increase.
- Check that the burner is operating correctly.
- Screw down the pressure switch adjusting ring nut until the burner lockout.
- Fully open the manual shut-off valve.
- Refit the transparent plastic cover on the pressure switch.

Adjusting the high gas pressure switch (when provided)

To calibrate the high pressure switch, proceed as follows:

- remove the plastic cover;
- measure the gas pressure in the network, when flame is off;
- by means of the adjusting ring nut **VR**, set the value read on step 2, increased by the 30%;
- replace the plastic cover.

PART II: OPERATION

LIMITATIONS OF USE

THE BURNER IS AN APPLIANCE DESIGNED AND CONSTRUCTED TO OPERATE ONLY AFTER BEING CORRECTLY CONNECTED TO A HEAT GENERATOR (E.G. BOILER, HOT AIR GENERATOR, FURNACE, ETC.), ANY OTHER USE IS TO BE CONSIDERED IMPROPER AND THEREFORE DANGEROUS.

THE USER MUST GUARANTEE THE CORRECT FITTING OF THE APPLIANCE, ENTRUSTING THE INSTALLATION OF IT TO QUALIFIED PERSONNEL AND HAVING THE FIRST COMMISSIONING OF IT CARRIED OUT BY A SERVICE CENTRE AUTHORISED BY THE COMPANY MANUFACTURING THE BURNER.

A FUNDAMENTAL FACTOR IN THIS RESPECT IS THE ELECTRICAL CONNECTION TO THE GENERATOR'S CONTROL AND SAFETY UNITS (CONTROL THERMOSTAT, SAFETY, ETC.) WHICH GUARANTEES CORRECT AND SAFE FUNCTIONING OF THE BURNER.

THEREFORE, ANY OPERATION OF THE APPLIANCE MUST BE PREVENTED WHICH DEPARTS FROM THE INSTALLATION OPERATIONS OR WHICH HAPPENS AFTER TOTAL OR PARTIAL TAMPERING WITH THESE (E.G. DISCONNECTION, EVEN PARTIAL, OF THE ELECTRICAL LEADS, OPENING THE GENERATOR DOOR, DISMANTLING OF PART OF THE BURNER).

NEVER OPEN OR DISMANTLE ANY COMPONENT OF THE MACHINE.

OPERATE ONLY THE MAIN SWITCH, WHICH THROUGH ITS EASY ACCESSIBILITY AND RAPIDITY OF OPERATION ALSO FUNCTIONS AS AN EMERGENCY SWITCH, AND ON THE RESET BUTTON.

IN CASE OF A BURNER SHUT-DOWN, RESET THE CONTROL BOX BY MEANS OF THE RESET PUSHBUTTON. IF A SECOND SHUT-DOWN TAKES PLACE, CALL THE TECHNICAL SERVICE, WITHOUT TRYING TO RESET FURTHER.

WARNING: DURING NORMAL OPERATION THE PARTS OF THE BURNER NEAREST TO THE GENERATOR (COUPLING FLANGE) CAN BECOME VERY HOT, AVOID TOUCHING THEM SO AS NOT TO GET BURNT.

OPERATION

⚠	ATTENTION: BEFORE STARTING THE BURNER UP, BE SURE THAT THE MANUAL CUTOFF VALVES ARE OPEN AND CHECK THAT THE PRESSURE VALUE UPSTREAM THE GAS TRAIN MATCHES THE VALUE ON PARAGRAPH “TECHNICAL SPECIFICATIONS”). CHECK THAT THE MAINS SWITCH IS CLOSED. CAREF

1 Turn to the “ON” position the main switch **A**, on the burner’s control panel (see Fig. 29).

2 Check the flame control box is not locked (light **B**, on) and eventually release it by means of the pushbutton **C** (reset - for more information about the device, please refer to the manual’s Appendix).

3 Check the series of thermostats or pressure switches gives the burner the start signal for operating.

4 Check that the gas pressure in the gas network is sufficient (if the pressure is normal, the lamp **E** lights).

Only burners provided with the gas proving system: the check cycle of the gas proving system starts; the end of this check is signalled by the light of the LC LED on the device (see picture below). When the valves check come to end, the startup cycle of the burner begins. In the case of a leak in a valve, the gas proving system locks and the lamp **E** lights (on the burner control panel). To reset the device press its **LB** pushbutton (see picture below).

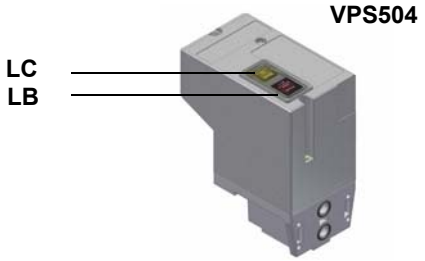

5 The startup cycle begins, the actuator drives the air damper to the maximum opening position, the fan motor starts and the pre-purge phase begins. During the pre-purge phase, the complete opening of the air damper is signalled by the lamp **F** on the burner control panel.

6 At the end of the pre-purge phase, the air damper goes to the ignition position, the ignition transformer comes on (signalled by the lamp **H**) and few seconds later the solenoid valves EV1 and EV2 are energised (lights **I** and **L** on the control panel).

7 Few seconds after the opening of the valves, the ignition transformer turns off and the lamp **H** turns off as well, then:

- **High-low flame burners:** the burner is in low flame stage (light **G** is on); some seconds later the high flame operation begins and the burner switches automatically to high flame (light **F** is on) or keeps on operating in low flame stage, according to the plant needs.
- **Progressive and fully modulating burners** - few seconds after the gas valve opening, the ignition transformer is de-energised. The burner is in low flame operation and some seconds later the two-stages operation begins; the burner increases or decreases its output, directly driven by the external thermostat (progressive version) or by the modulator (**P** in Fig. 29, fully modulating burners only).

Fig. 29 - Control panel

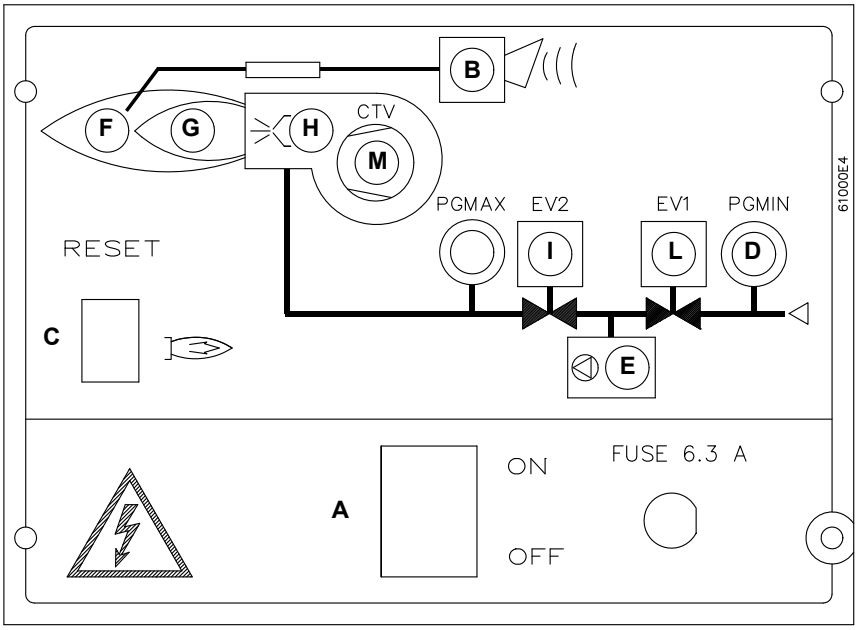

P

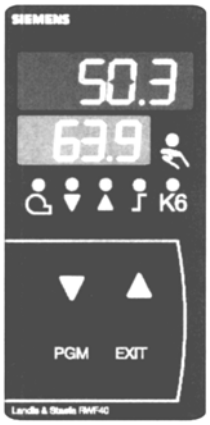

Q

Keys

A Main switch on-off
B Lockout indicator light
C Reset pushbutton for flame control box
D Gas pressure switch consent indicator light
E Gas proving system lockout indicator light (only on burners with leakage control device)
F High flame operation indicator light (or air damper open during pre-purgue phase)
G Low flame operation indicator light
H Ignition tranformer operation indicator light
I Valve in operation indicator light for EV2
L Valve in operation indicator light for EV1
M Indicator light for fan motor overload tripped (only three-phase burners); to reset the overload tripped, the electrical board must be opened).
P Modulator (fitted only on fully modulating burners)
Q Operation manual selector: 0) stop - 1) high flame - 2) low flame - 3) automatic

PART III: MAINTENANCE

At least once a year carry out the maintenance operations listed below. In the case of seasonal servicing, it is recommended to carry out the maintenance at the end of each heating season; in the case of continuous operation the maintenance is carried out every 6 months.

⚠	**WARNING: ALL OPERATIONS ON THE BURNER MUST BE CARRIED OUT WITH THE MAINS DISCONNECTED AND THE FUEL MANAUL CUTOFF VALVES CLOSED!**
	ATTENTION: READ CAREFULLY THE "WARNINGS" CHAPTER AT THE BEGINNIG OF THIS MANUAL..

ROUTINE MAINTENANCE

- Cleane and check the gas filter cartridge, if necessary replace it (see next paragraphs).
- Remove, check and clean the combustion head (see Fig. 34)
- Check ignition electrode, clean, adjust and, if necessary, replace (see page 34)
- Check the detection electrode, clean, adjust and, if necessary, replace; in case of doubt, check the detection circuit following the diagram in Fig. 38 and Fig. 39, after turning the burner back into operation.

.Cleaning and greasing of leverages and rotating parts.

-

⚠	**ATTENTION**when servicing, if it was necessary to disassemble the gas train parts, remember to execute the gas proving test, once the gas train is reassembled, according to the procedure imposed by the law in force.

Removing the filter in theMULTIBLOC DUNGS MB-DLE 415 - 420 B01 1" 1/2 - 2"

- Check the filter at least once a year!
- Change the filter if the pressure difference between pressure connection 1 and 2 (Fig. 30-Fig. 31) Δp> 10 mbar.
- Change the filter if the pressure difference between pressure connection 1 and 2 (Fig. 30-Fig. 31) is twice as high compared to the last check.

You can change the filter without removing the fitting.

1 Interrupt the gas supply closing the on-off valve.
2 Remove screws 1 ÷ 6 (Fig. 32).
3 Change filter insert.
4 Re-insert filter housing, screw in screws 1 ÷ 6 without using any force and fasten.
5 Perform leakage and functional test, $p_{max.}$ = 360 mbar.
6 Pay attention that dirt does not fall inside the valve.

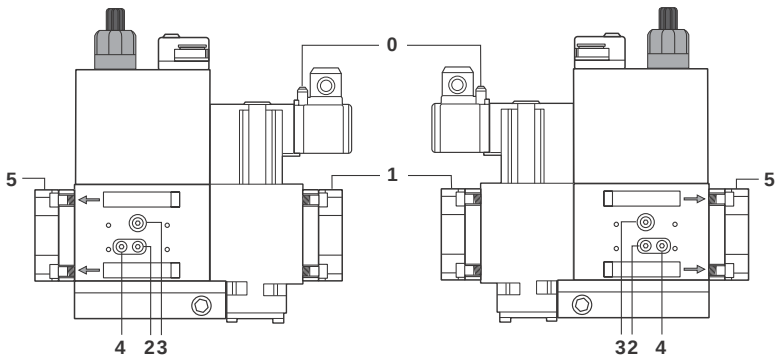

Fig. 30

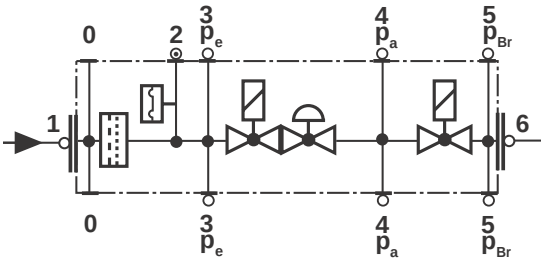

Fig. 31

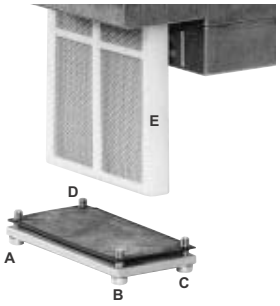

Fig. 32

Inspection and replacement of the MULTIBLOC DUNGS MBC..SE filter (Threaded valves group)

Inspect the filter at least once a year.

- Change the filter, if pressure value between pressure connections 1 and 2 is greather than 10 mbar.
- Change the filter, if pressure value between pressure connections 1 and 2 is twice as high compared to the last inspection.

1. Interrupt gas supply: close ball valve
2. Remove screws 1-2
3. Replace the filter insert 3
4. Screw in screws 1-2 without use force to fasten.
5. Perform leakage and funcion test.
6. Pay attention that dirt does not fall inside the valve.

Space requirements for fitting filter, A: from 150 to 230 mm.

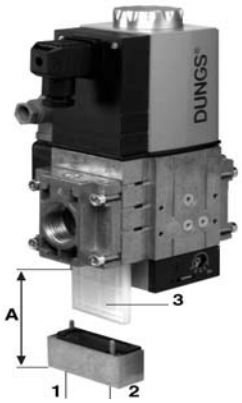

Fig.33

Gas filter maintenance

⚠	**ATTENTION:** Before opening the filter, close the manual cutoff valve downstream the filter and bleed the gas; check that inside the filter there is no pressurised gas.

To clean or remove the filter, proceed as follows:

1 remove the cap unscrewing the fixing screws (A);
2 remove the filtering cartridge (B), clean it using water and soap, blow it with compressed air(or replace it, if necessary)
3 replace the cartridge in its proper position taking care to place it inbetween the guides as not to hamper the cap replacement;
4 be sure to replace the “O” ring into its place (C) and replace the cover fastening by the proper screws (A).

A

B

C

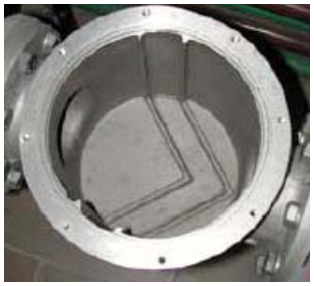

Removing the combustion head

Type LX60

- Remove cover C.
- Unscrew the two screws S holding in position the washer and then unscrew VRT to free the threaded rod AR.
- Unscrew the screws V holding in position the manifold G and pull out the complete group as shown in figure.

Note: for the subsequent assembly carry out the above described operations in the reverse order, checking the correct position of the OR ring.

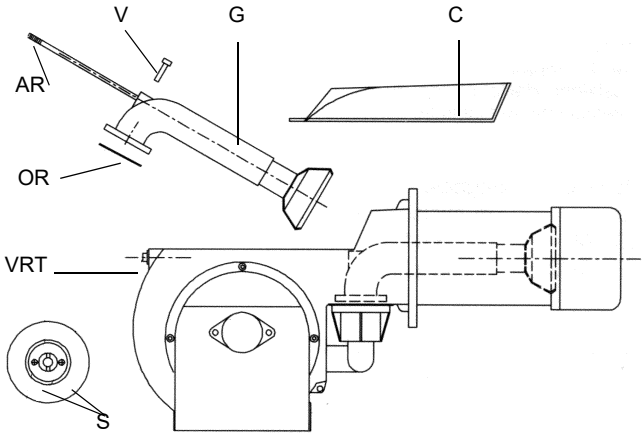

Fig. 24

Type LX65 / LX72

- Remove the burner cover C.
- Unscrew the screws V holding in position the manifold G and pull out the complete group as shown in figure.

Note: for the subsequent assembly carry out the above described operations in the reverse order, checking the correct position of the OR ring.

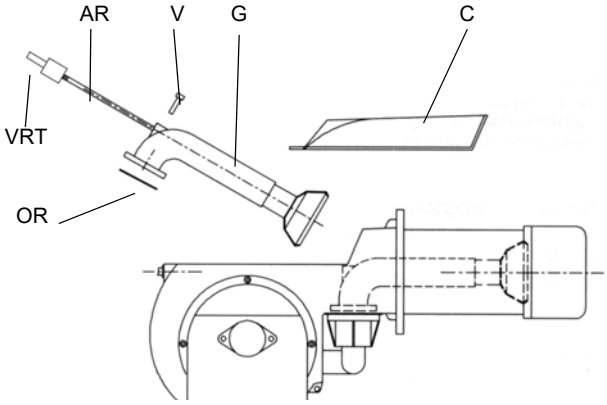

Fig. 25

Adjusting the electrodes

Important Note: Check the ignition and detection electrodes after removing/adjusting the combustion head.

⚠	**ATTENTION:** avoid the ignition and detection electrodes to contact metallic parts (blast tube, head, etc.), otherwise the boiler's operation would be compromised. Check the electrodes position after any intervention on the combustion head.

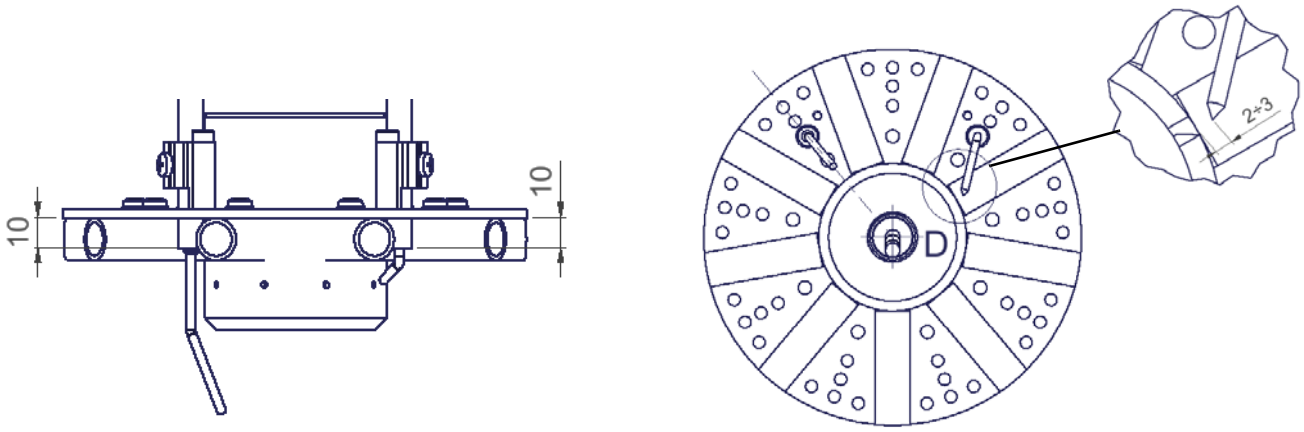

Fig. 26

Replacing the electrodes

⚠	**ATTENTION:** avoid the ignition and detection electrodes to contact metallic parts (blast tube, head, etc.), otherwise the boiler's operation would be compromised. Check the electrodes position after any intervention on the combustion head.

To replace the electrodes, proceed as follows:

1 remove the burner cover
2 disconnect the electrodes cables;
3 loose the screws of the electrodes (**VB**);
4 remove the ignition electrodes and replace them paying attention to the measures shown in figure.

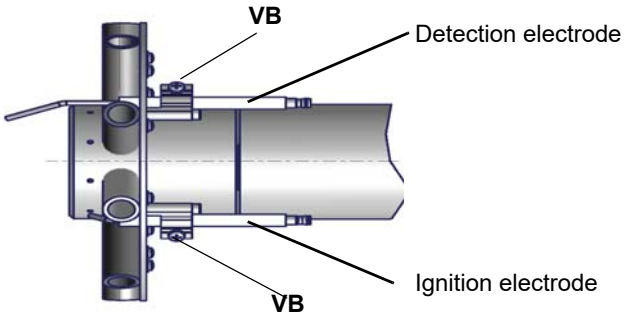

Fig. 37

Checking the detection current

To measure the detection signals refer to the diagram on the next picture.

If the signal is less than the indicated value, check the position of the detection electrode/UV detector, the electrical contacts and if necessary replace the detection electrode/UVdetector .

Control box	Minimum detection signal
Siemens LME (with electrode)	3 µA
Siemens LME (with UV detector)	3 µA (Fig. 38) - 200 µA (Fig. 39)

Test point for burners with PCB provided

To check the detection current, remove the jumper between terminals and connect the microamperemeter (see next picture).

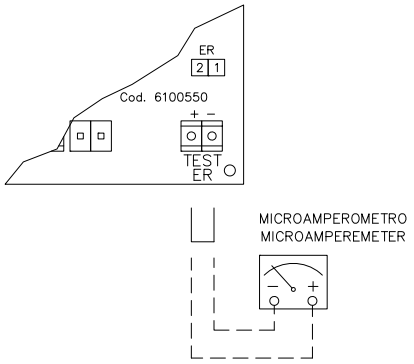

Fig. 38

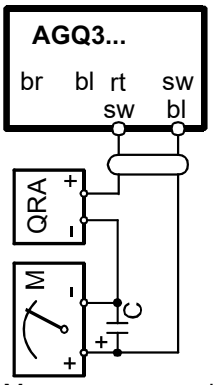

Fig. 39

Seasonal stop

To stop the burner in the seasonal stop, proceed as follows:

1 turn the burner's main switch to 0 (Off position)

2 disconnect the power mains
3 close the fuel cock of the supply line

Burner disposal

In case of disposal, follow the instructions according to the laws in force in your country about the “Disposal of materials”.

TROUBLESHOOTING

CAUSE / FAULT	BURNER DOESN'T START	CONTINUE PRE-PURGUE	BURNER DOESN'T START AND LOCKS	BURNER DOESN'T START AND REPEATS THE CYCLE	BURNER STARTS AND REPEATS THE CYCLE	BURNER DOESN'T SWITCH TO HIGH FLAME	BURNER'S LOCKOUT DURING OPERATION	BURNER STOPS AND REPEATS CYCLE DURING OPERATION	BURNER'S LOCKOUT AFTER START	THE FLAME CONTROL DEV. REPEATS THE CYCLE WITHOUT GIVE CONSENT
MAIN SWITCH OPEN	●									
ABSENCE OF GAS	●									
MINIMUM GAS PRESSURE SWITCH FAULT OR BAD SETTING	●			●	●			●		
BOILER THERMOSTATS OPEN	●									
OVERLOAD TRIPPED INTERVENTION	●									
FUSES INTERVENTION	●									
AIR PRESSURE SWITCH FAULT OR BAD SETTING	●		●				●			●
DEFECTIVE FLAME CONTROL BOX	●	●	●				●			
DEFECTIVE AIR DAMPER ACTUATOR		●								
DEFECTIVE IGNITION TRANSFORMER			●							
IGNITION ELECTRODE WRONG POSITION			●							
BUTTERFLY VALVE BAD SETTING			●							
DEFECTIVE GAS GOVERNOR				●	●			●		
DEFECTIVE HI-LO FLAME THERMOSTAT						●				
ACTUATOR CAM BAD SETTING						●				
DETECTION ELECTRODE BAD POSITION OR DEFECTIVE DETECTION CIRCUIT							●		●	
REVERSED PHASE AND NEUTRAL CONNECTION									●	
PHASE-PHASE SUPPLY OR PRESENCE OF VOLTAGE ON NEUTRAL*									●	

* In this case insert an RC filter (see Fig. 17)

BURNER EXPLODED VIEW

LX60

ITEM	DESCRIPTION
1	COMBUSTION HEAD
1.1	DETECTION ELECTRODE
1.2	IGNITION ELECTRODE
2	BLAST TUBE
3.1	“O“ RING
3.2	BUTTERFLY GAS VALVE
3.3	GAS MANIFOLD
4.1	FAN WHEEL
4.2	MOTOR
5.1	GAS VALVES GROUP WITH GOVERNOR
5.2	THREADED GAS PIPE
5.3	ELBOW
5.4	REDUCTION
5.5	FLANGE
5.6	GAS PROVING SYSTEM
6	AIR INLET CONE
7	BURNER HOUSING
7.1	COVER
8	GENERATOR GASKET
9	AIR PRESSURE SWITCH PIPE
10	INSPECTION GLASS
11	AIR PRESSURE SWITCH
12.1.1	LEVERAGE
12.1.2	ADJUSTING CAM
12.1.3	ACTUATOR
12.1.4	ACTUATOR SHAFT

ITEM	DESCRIPTION
12.1.5	BRACKET
12.2.1	SCREW
12.2.2	SCREW
12.2.3	CAM
12.2.4	LEVERAGE
12.2.5	ROD
12.2.6	JOINT
12.2.7	JOINT
12.3	INDEX LABEL
12.4	AIR INTAKE DAMPER
12.5	AIR INTAKE
12.6	LOUVER SHAFT
12.7	THROTTLE SHAFT
12.8	ADJUSTING CAM SHAFT
12.9	LEVERAGE
12.10	ROD
12.11	ROD
12.12	JOINT
12.13	JOINT
13	HEAD ADJUSTING SCREW
14.1	FRONT CONTROL PANEL
14.2	BOARD
14.3	COVER
15	CONNECTOR

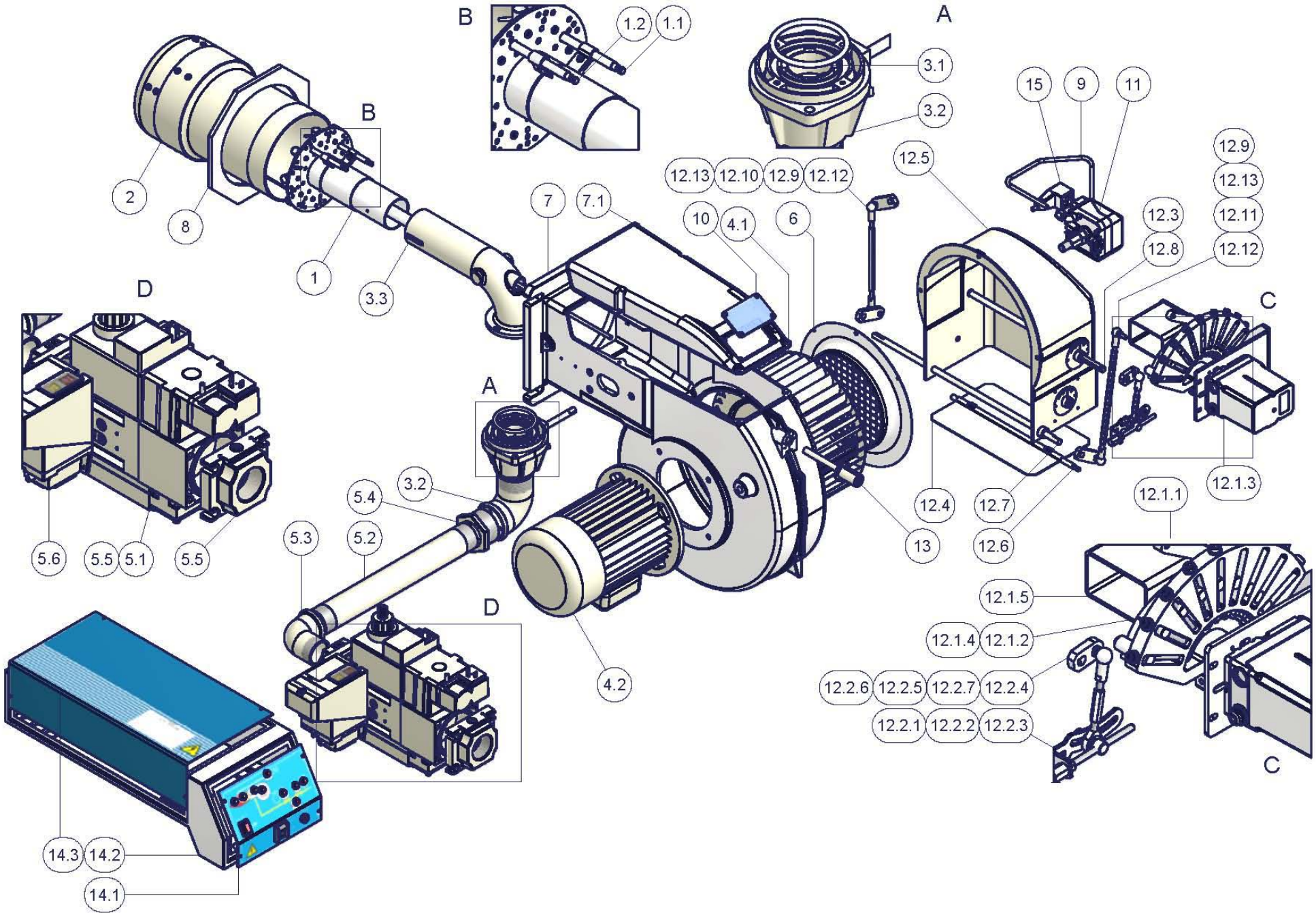
A
B
C
D
1
1.1
1.2
2
3.1
3.2
3.3
4.1
4.2
5.1
5.2
5.3
5.4
5.5
5.6
6
7
7.1
8
9
10
11
12.1.1
12.1.2
12.1.3
12.1.4
12.1.5
12.2.1
12.2.2
12.2.3
12.2.4
12.2.5
12.2.6
12.2.7
12.3
12.4
12.5
12.6
12.7
12.8
12.9
12.10
12.11
12.12
12.13
13
14.1
14.2
14.3
15

LX65 - LX72

ITEM	DESCRIPTION
1	BLAST TUBE
2.1	FAN WHEEL
2.2	MOTOR
3.1	GAS FILTER
3.2	FLANGE
3.3	GASKET
3.4	GASKET
3.5	FLANGED PIPE
3.6.1	PRESSURE SWITCH
3.6.2	GAS VALVE
3.6.3	“SKP” ACTUATOR
3.6.4	“SKP” ACTUATOR
3.6.5	GAS PROVING SYSTEM
4	AIR INLET CONE
5	BURNER HOUSING
5.1	COVER
5.2	COVER EXTENSION
6	GASKET
7	AIR PRESSURE SWITCH PIPE
8	“O” RING
9	INSPECTION GLASS
10	BUTTERFLY GAS VALVE
11	MANIFOLD
12	COMBUSTION HEAD
12.1	DETECTION ELECTRODE
12.2	IGNITION ELECTRODE
13	AIR PRESSURE SWITCH ASS.Y
14.1.1	LEVERAGE
14.1.2	ADJUSTING CAM
14.1.3	ACTUATOR
14.1.4	CONNECTOR

ITEM	DESCRIPTION
14.1.5	BRACKET
14.2.1	NUT
14.2.2	SCREW
14.2.3	ADJSUTING CAM
14.2.4	CONNECTING ROD
14.2.5	ROD
14.2.6	JOINT
14.2.7	JOINT
14.3	AIR DAMPER
14.4	AIR DAMPER
14.5	AIR INLET
14.6	AIR DAMPER SHAFT
14.7	AIR DAMPER SHAFT
14.8	PIN
14.9	PIN
14.10	CONNECTING ROD
14.11	ROD
14.12	ROD
14.13	JOINT
14.14	JOINT
15	SCREW
16.1	ELECTRIC BOARD
16.2.1	RED LED
16.2.2	RED LED
16.2.3	UNLOCKING PUSHBUTTON
16.2.4	BUTTON COVER
16.2.5	SWITCH
16.2.6	FUSE
16.2.7	FRONT CONTROL PANEL
16.3	BOARD COVER
17	CONNECTOR

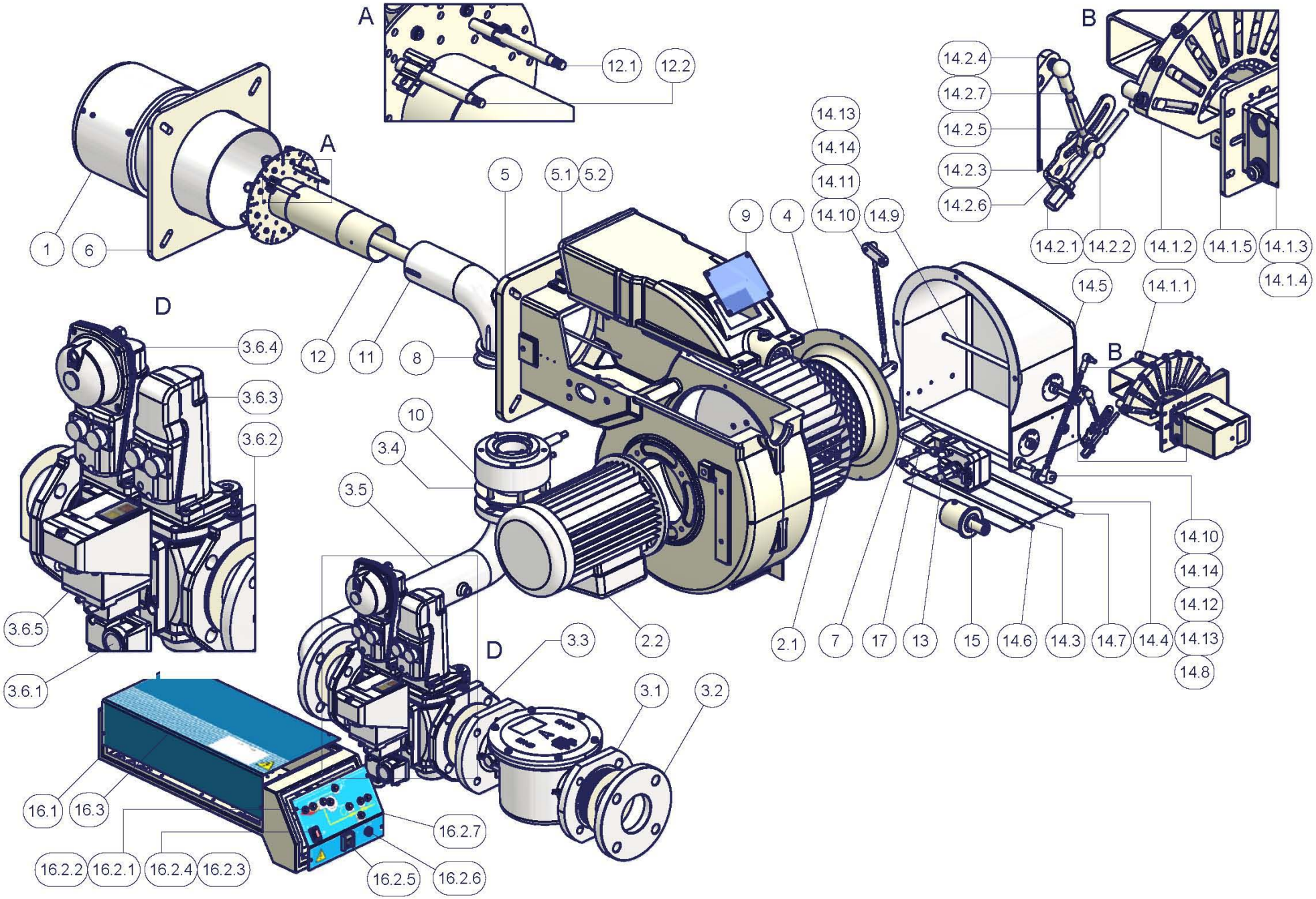
A
12.1
12.2
B
14.2.4
14.2.7
14.2.5
14.2.3
14.2.6
14.13
14.14
14.11
14.10
14.9
14.2.1
14.2.2
14.1.2
14.1.5
14.1.3
14.1.4
14.5
14.1.1
A
5
5.1
5.2
9
4
1
6
D
3.6.4
12
11
8
B
3.6.3
10
3.6.2
3.4
3.5
14.10
14.14
14.12
14.13
14.8
3.6.5
3.6.1
D
3.3
2.2
2.1
7
17
13
15
14.6
14.3
14.7
14.4
3.1
3.2
16.1
16.3
16.2.7
16.2.2
16.2.1
16.2.4
16.2.3
16.2.5
16.2.6

WIRING DIAGRAMS

ATTENTION:

1 - Power supply: 400V 50Hz 3N a.c.three-phase and 230V 50Hz 1N a.c. monophase
2 - Don’t reverse phase and neutral
3 - Ensure the burner is properly earthed

VERSIONE ALTA-BASSA FIAMMA "AB" / PROGRESSIVO "PR"
"AB" HIGH-LOW / "PR" PROGRESSIVE VERSION

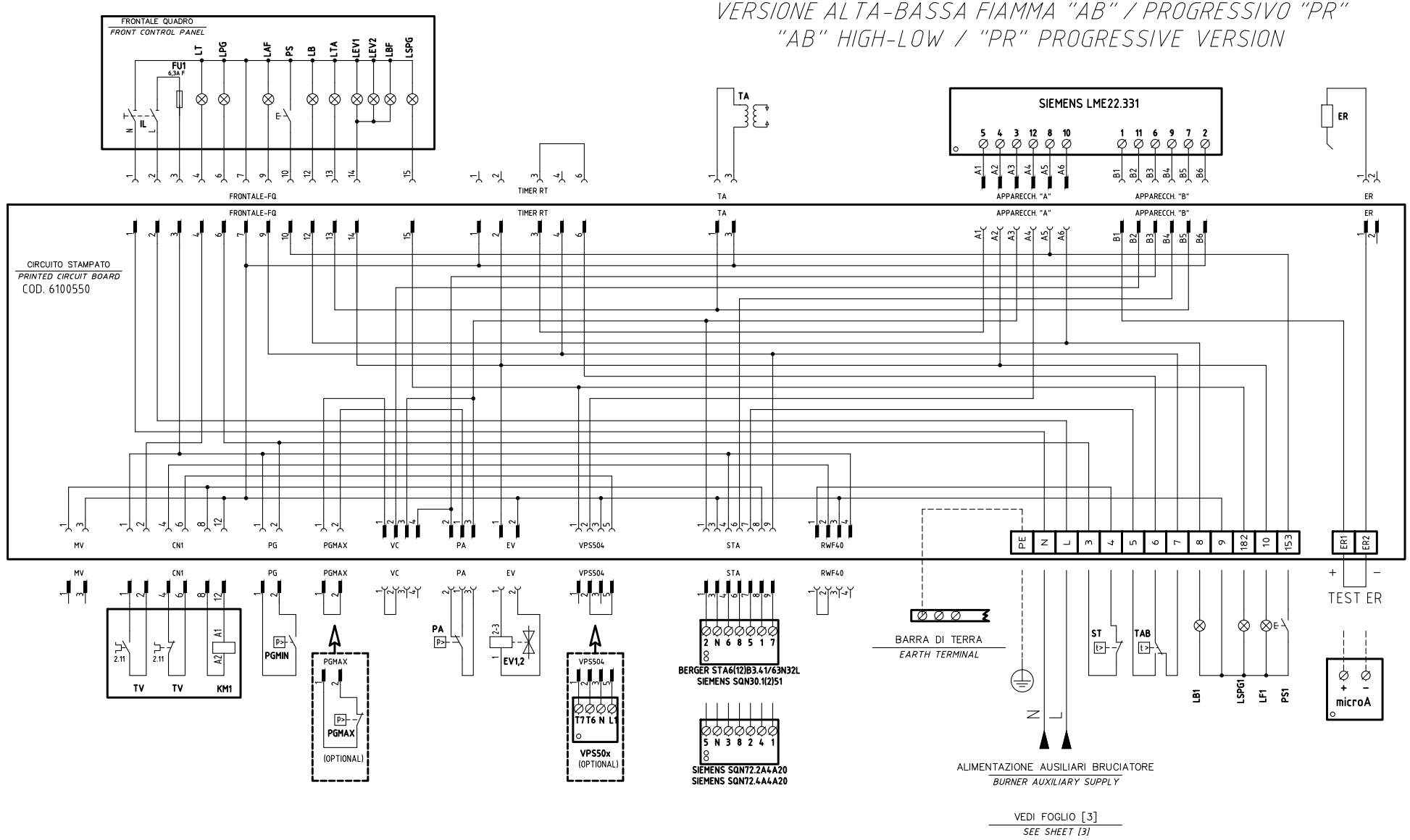

Data 18/01/2012		PREC.	FOGLIO
Revisione 02		/	1
Dis. N. 18 – 236		SEGUE	TOTALE
		2	4

VERSIONE MODULANTE "MD"
"MD" MODULATING VERSION

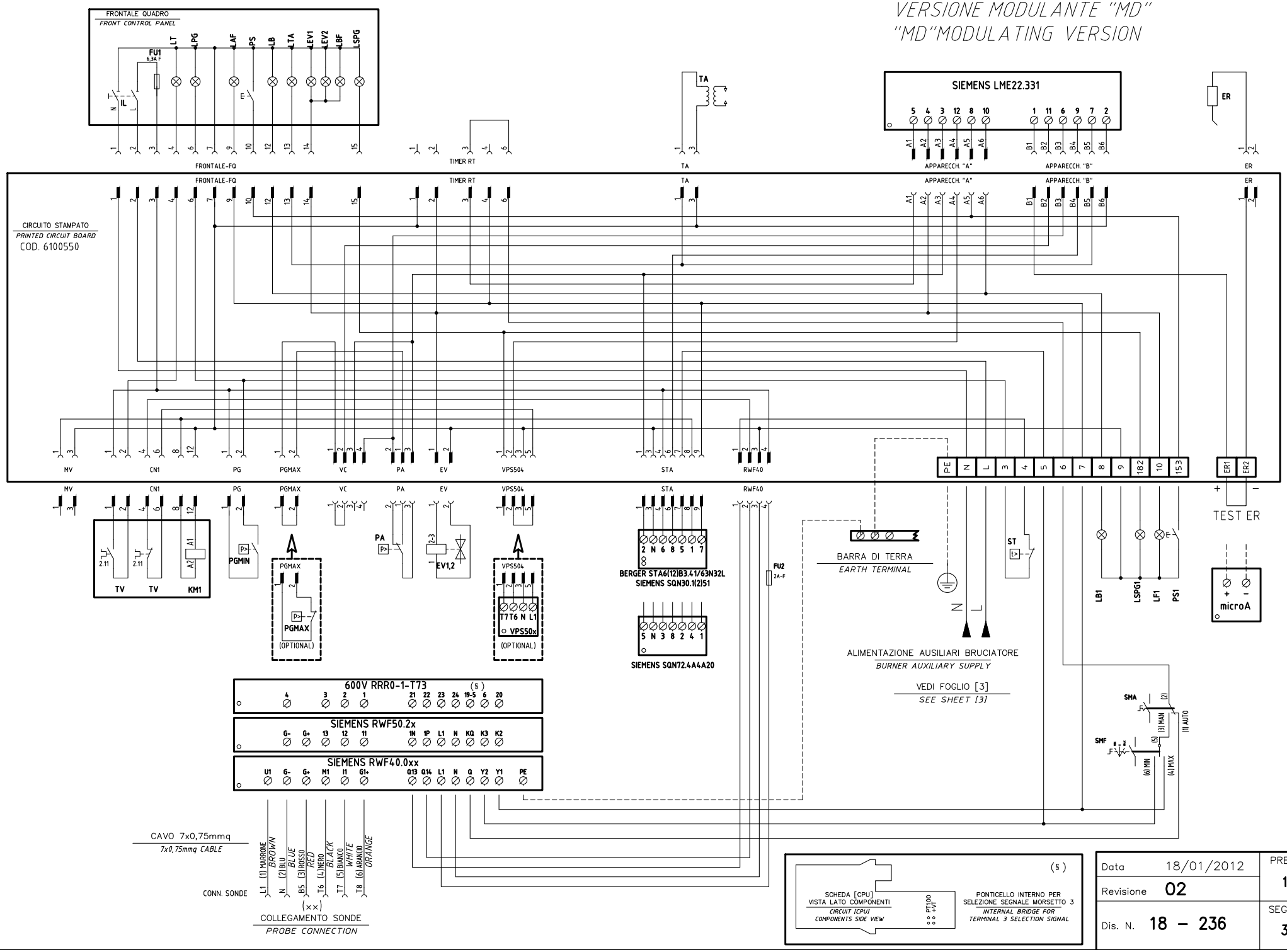

Data	18/01/2012	PREC. 1	FOGLIO 2
Revisione	02		
Dis. N.	18 – 236	SEGUE 3	TOTALE 4

(××)
ATTENZIONE COLLEGAMENTO SONDE CON CONNETTORE 7 POLI
WARNING PROBE CONNECTION WITH 7 PINS CONNECTOR

600V RRR0-1-T73

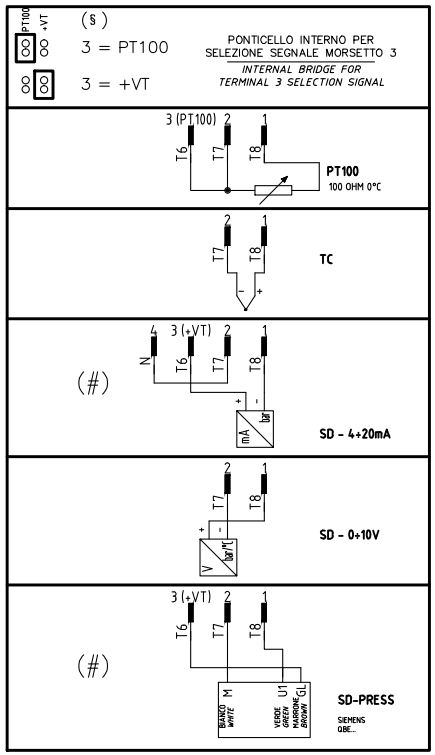

RWF40.0x0

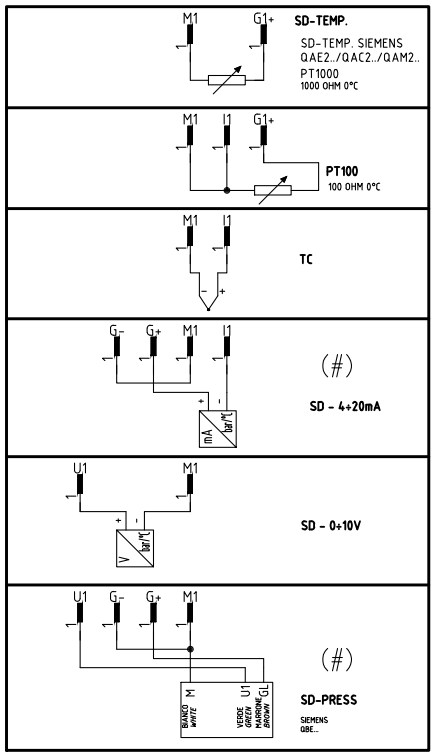

RWF50.2x

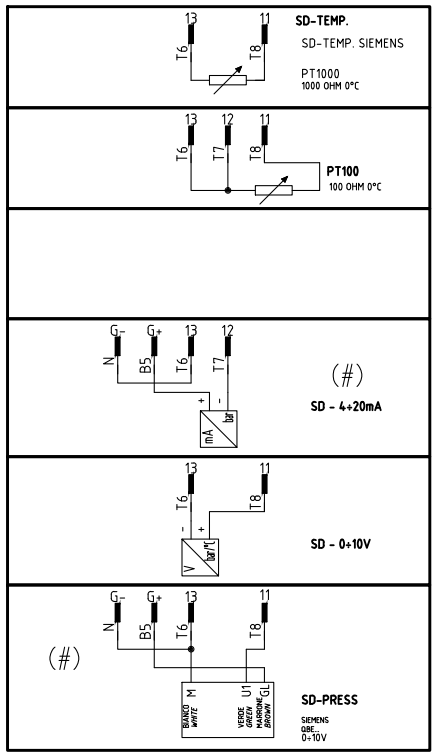

(#)
COLLEGAMENTO SOLO PER TRASDUTTORI PASSIVI
TRASDUCER PASSIVE CONNECTION ONLY

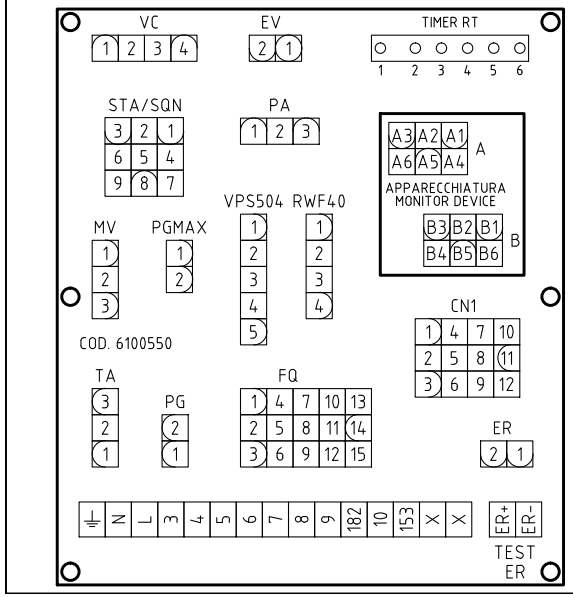

SERVOCOMANDO SERRANDA ARIA
AIR DAMPER ACTUATOR
BERGER STA6(12)B3.41/63N32L

ST2	ALTA FIAMMA *HIGH FLAME*
ST0	SOSTA *STAND-BY*
ST1	BASSA FIAMMA *LOW FLAME*
MV	NON USATA *NOT USED*

SERVOCOMANDO SERRANDA ARIA (ALTERNATIVO)
AIR DAMPER ACTUATOR (ALTERNATIVE)
SIEMENS SQN72.xA4A20

I (ROSSO) *I (RED)*	ALTA FIAMMA *HIGH FLAME*
II (BLU) *II (BLUE)*	SOSTA *STAND-BY*
III (ARANCIO) *III (ORANGE)*	BASSA FIAMMA *LOW FLAME*
IV (NERO) *IV (BLACK)*	NON USATA *NOT USED*

SERVOCOMANDO SERRANDA ARIA (ALTERNATIVO)
AIR DAMPER ACTUATOR (ALTERNATIVE)
SIEMENS SQN30.1(2)51A

I	ALTA FIAMMA *HIGH FLAME*
II	SOSTA *STAND-BY*
III	BASSA FIAMMA *LOW FLAME*
V	NON USATA *NOT USED*

QG - MC1

MORSETTIERA COLLEGAMENTO LINEA E MOTORE TRIFASE
MOTOR THREE PHASES AND ELECTRIC SUPPLY CONNECTION TERMINAL BOARD

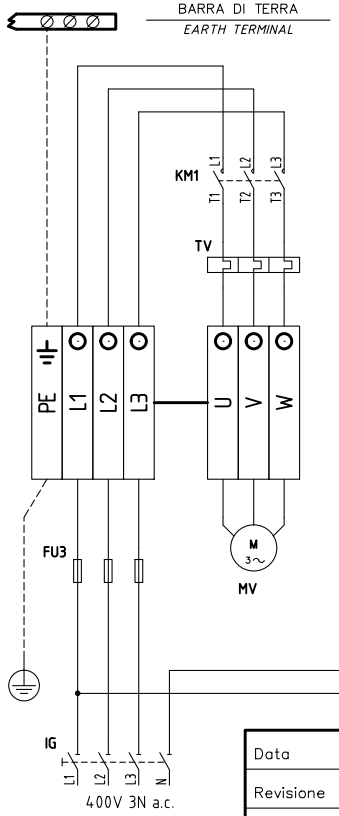

ALIMENTAZIONE AUSILIARI BRUCIATORE
BURNER AUXILIARY SUPPLY

VEDI FOGLIO [1 / 2]
SEE SHEET [1 / 2]

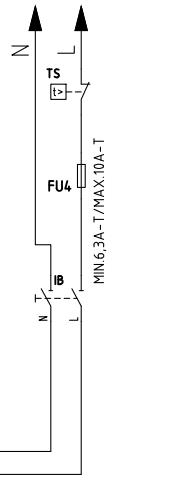

Data	18/01/2012	PREC. 2	FOGLIO 3
Revisione	02		
Dis. N.	18 – 236	SEGUE 4	TOTALE 4

Sigla/Item	Funzione	Function
600V RRR0-1-T73	REGOLATORE MODULANTE (ALTERNATIVO)	BURNER MODULATOR (ALTERNATIVE)
BERGER STA6(12)B3.41/63N32L	SERVOCOMANDO SERRANDA ARIA	AIR DAMPER ACTUATOR
ER	ELETTRODO RILEVAZIONE FIAMMA	FLAME DETECTION ELECTRODE
EV1,2	ELETTROVALVOLE GAS (O GRUPPO VALVOLE)	GAS ELECTRO-VALVES (OR VALVES GROUP)
FU1	FUSIBILE DI LINEA	LINE FUSE
FU2	FUSIBILE AUSILIARIO	AUXILIARY FUSE
FU3	FUSIBILI LINEA MOTORE VENTILATORE	FAN MOTOR LINE FUSES
FU4	FUSIBILE DI LINEA	LINE FUSE
IB	INTERRUTTORE LINEA BRUCIATORE	BURNER LINE SWITCH
IG	INTERRUTTORE GENERALE	MAINS SWITCH
IL	INTERRUTTORE LINEA AUSILIARI	AUXILIARY LINE SWITCH
KM1	CONTATTORE MOTORE VENTILATORE	FAN MOTOR CONTACTOR
LAF	LAMPADA SEGNALAZIONE ALTA FIAMMA BRUCIATORE	BURNER IN HIGH FLAME INDICATOR LIGHT
LB	LAMPADA SEGNALAZIONE BLOCCO BRUCIATORE	INDICATOR LIGHT FOR BURNER LOCK-OUT
LB1	LAMPADA SEGNALAZIONE BLOCCO BRUCIATORE	INDICATOR LIGHT FOR BURNER LOCK-OUT
LBF	LAMPADA SEGNALAZIONE BASSA FIAMMA BRUCIATORE	BURNER IN LOW FLAME INDICATOR LIGHT
LEV1	LAMPADA SEGNALAZIONE APERTURA [EV1]	INDICATOR LIGHT FOR OPENING OF ELECTRO-VALVE [EV1]
LEV2	LAMPADA SEGNALAZIONE APERTURA [EV2]	INDICATOR LIGHT FOR OPENING OF ELECTRO-VALVE [EV2]
LF1	LAMPADA SEGNALAZIONE FUNZIONAMENTO BRUCIATORE	INDICATOR LIGHT BURNER OPERATION
LPG	LAMPADA SEGNALAZIONE PRESENZA GAS IN RETE	INDICATOR LIGHT FOR PRESENCE OF GAS IN THE NETWORK
LSPG	LAMPADA SEGNALAZIONE BLOCCO CONTROLLO TENUTA VALVOLE	INDICATOR LIGHT FOR LEAKAGE OF VALVES
LSPG1	LAMPADA SEGNALAZIONE BLOCCO CONTROLLO TENUTA VALVOLE	INDICATOR LIGHT FOR LEAKAGE OF VALVES
LT	LAMPADA SEGNALAZIONE BLOCCO TERMICO	INDICATOR LIGHT FOR MOTOR OVERLOAD THERMAL CUTOUT
LTA	LAMPADA SEGNALAZIONE TRASFORMATORE DI ACCENSIONE	IGNITION TRANSFORMER INDICATOR LIGHT
MV	MOTORE VENTILATORE	FAN MOTOR
PA	PRESSOSTATO ARIA	AIR PRESSURE SWITCH
PGMAX	PRESSOSTATO GAS DI MASSIMA PRESSIONE	MAXIMUM PRESSURE GAS SWITCH
PGMIN	PRESSOSTATO GAS DI MINIMA PRESSIONE	MINIMUM GAS PRESSURE SWITCH
PS	PULSANTE SBLOCCO FIAMMA	FLAME UNLOCK BUTTON
PS1	PULSANTE SBLOCCO FIAMMA	FLAME UNLOCK BUTTON
PT100	SONDA DI TEMPERATURA	TEMPERATURE PROBE
SD-PRESS	SONDA DI PRESSIONE	PRESSURE PROBE
SD-TEMP.	SONDA DI TEMPERATURA	TEMPERATURE PROBE
SD - 0÷10V	TRASDUTTORE USCITA IN TENSIONE	TRANSDUCER VOLTAGE OUTPUT
SD - 4÷20mA	TRASDUTTORE USCITA IN CORRENTE	TRANSDUCER CURRENT OUTPUT
SIEMENS LME22.331	APPARECCHIATURA CONTROLLO FIAMMA	CONTROL BOX
SIEMENS RWF40.0xx	REGOLATORE MODULANTE (ALTERNATIVO)	BURNER MODULATOR (ALTERNATIVE)
SIEMENS RWF50.2x	REGOLATORE MODULANTE	BURNER MODULATOR
SIEMENS SQN30.1(2)51	SERVOCOMANDO SERRANDA ARIA (ALTERNATIVO)	AIR DAMPER ACTUATOR (ALTERNATIVE)
SIEMENS SQN72.2A4A20	SERVOCOMANDO SERRANDA ARIA (ALTERNATIVO)	AIR DAMPER ACTUATOR (ALTERNATIVE)
SIEMENS SQN72.4A4A20	SERVOCOMANDO SERRANDA ARIA (ALTERNATIVO)	AIR DAMPER ACTUATOR (ALTERNATIVE)
SMA	SELETTORE MANUALE/AUTOMATICO	MANUAL/AUTOMATIC SWITCH
SMF	SELETTORE MANUALE FUNZIONAMENTO MIN-0-MAX	MIN-0-MAX MANUAL OPERATION SWITCH
ST	SERIE TERMOSTATI/PRESSOSTATI	SERIES OF THERMOSTATS OR PRESSURE SWITCHES
ST	SERIE TERMOSTATI/PRESSOSTATI	SERIES OF THERMOSTATS OR PRESSURE SWITCHES
TA	TRASFORMATORE DI ACCENSIONE	IGNITION TRANSFORMER
TAB	TERMOSTATO/PRESSOSTATO ALTA-BASSA FIAMMA	HIGH-LOW THERMOSTAT/PRESSURE SWITCHES
TC	TERMOCOPPIA	THERMOCOUPLE
TS	TERMOSTATO/PRESSOSTATO DI SICUREZZA	SAFETY THERMOSTAT OR PRESSURE SWITCH
TV	TERMICO MOTORE VENTILATORE	FAN MOTOR THERMAL
VPS50x	CONTROLLO DI TENUTA VALVOLE GAS (OPTIONAL)	GAS PROVING SYSTEM (OPTIONAL)
microA	MICROAMPEROMETRO	MICROAMMETER

Data	18/01/2012	PREC.	FOGLIO
Revisione	02	3	4
Dis. N.	18 - 236	SEGUE	TOTALE
		/	4

APPENDIX

SIEMENS LME11/21/22 CONTROL BOX

The series of equipment LME.. is used for the starup and supervisione of 1- or 2- stage gas burners. The series LME.. is interchangeable with the series LGB.. and LMG.., all diagrams and accessories are interchangeable.

Comparative table

LGB Series	LMG Series	LME Series
---	LMG 25.33	LME 11.33
LGB 21.33	LMG 21.33	LME 21.33
LGB 22.33	LMG 22.33	LME 22.33

Preconditions for burner startup

- Burner control must be reset
- All contacts in the line are closed, request for heat
- No undervoltage
- Air pressure switch LP must be in its “no-load” position
- Fan motor or AGK25 is closed
- Flame detector is darkened and there is no extraneous light

Undervoltage

Safety shutdown from the operating position takes place should mains voltage drop below about AC 175 V (at UN = AC 230 V)

Restart is initiated when mains voltage exceeds about AC 185 V (at UN = AC 230 V).

Controlled intermittent operation

After no more than 24 hours of continuous operation, the burner control will initiate automatic controlled shutdown followed by a restart.

Reversed polarity protection with ionization

If the connections of live conductor (terminal 12) and neutral conductor (terminal 2) aremixed up, the burner control will initiate lockout at the end of the safety time “TSA”.

Control sequence in the event of fault

If lockout occurs, the outputs for the fuel valves, the burner motor and the ignition equipment will immediately be deactivated (< 1 second).

Operational status indication

In normal operation, the different operating states are showed by means of the multicolor LED, inside the lockout reset button:

LED **red LED** **yellow LED** **green LED**	..... Steady on ❍... Off

During startup, status indication takes place according to the table:

Status	Color code	Color
Waiting time tw, other waiting states	❍.....	Off
Ignition phase, ignition controlled	● ❍ ● ❍ ● ❍ ● ❍ ● ❍ ●	Flashing yellow
Operation, flame ok	□.....	Green
Operation, flame not ok	□ ❍ □ ❍ □ ❍ □ ❍ □ ❍	Flashing green
Extraneous light on burner startup	□ ▲ □ ▲ □ ▲ □ ▲ □ ▲	Green - red
Undervoltage	● ▲ ● ▲ ● ▲ ● ▲ ● ▲	Yellow - red
Fault, alarm	▲.....	Red
Error code output (refer to “Error code table”)	▲❍ ▲❍ ▲❍ ▲❍	Flashing red

START-UP PROGRAM

As far as the startup program, see its time diagram:

A Start command (switching on)

This command is triggered by control thermostat / pressure controller «R». Terminal 12 receives voltage and the programming mechanism starts running. On completion of waiting time «tw» with the LME21..., or after air damper «SA» has reached the nominal load position (on completion of «t11») with the LME22..., fan motor «M» will be started.

tw Waiting time

During the waiting time, air pressure monitor «LP» and flame relay «FR» are tested for correct contact positions.

t11 Programmed opening time for actuator «SA»

(Only with LME22...) The air damper opens until the nominal load position is reached. Only then will fan motor «M» be switched on.

t10 Specified time for air pressure signal

On completion of this period of time, the set air pressure must have built up, or else lockout will occur.

t1 Prepurge time

Purging the combustion chamber and the secondary heating surfaces: required with low-fire air volumes when using the LME21... and with nominal load air volumes when using the LME22.... The diagrams show the so-called prepurge time «t1» during which air pressure monitor «LP» must indicate that the required air pressure is available. The effective prepurge time «t1» comprises interval end «tw» through «t3».

t12 Programmed closing time for actuator «SA»

(Only with LME22...)During «t12», the air damper travels to the low-fire position.

t3 Preignition time

During «t3» and up to the end of «TSA», flame relay «FR» is forced to close. On completion of «t3», the release of fuel is triggered at terminal 4.

TSA Ignition safety time

On completion of «TSA», a flame signal must be present at terminal 1. That flame signal must be continuously available until shutdown occurs, or else flame relay «FR» will be deenergized, resulting in lockout.

t4 Interval BV1 and BV2-LR

Time between the end of TSA and the signal to the second fuel valve BV2 or to the load controller LR

B - B' Interval for flame establishment

C Burner operation position

C - D Burner operation (heat production)

D Controlled by "R" shutdown

The burner stops and the control device is ready for a new startup.

LME11 control sequence

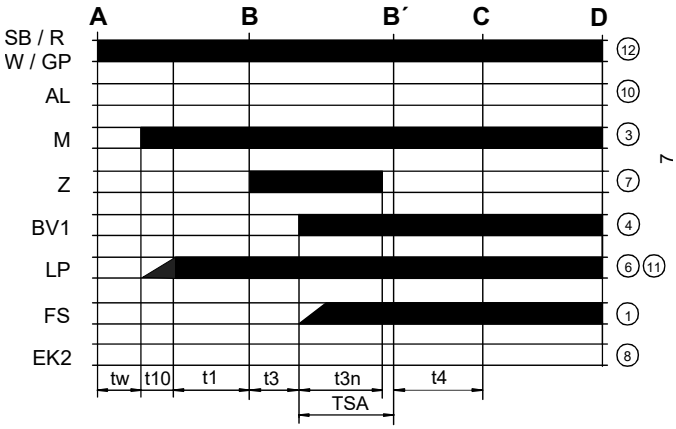

LME21 control sequence

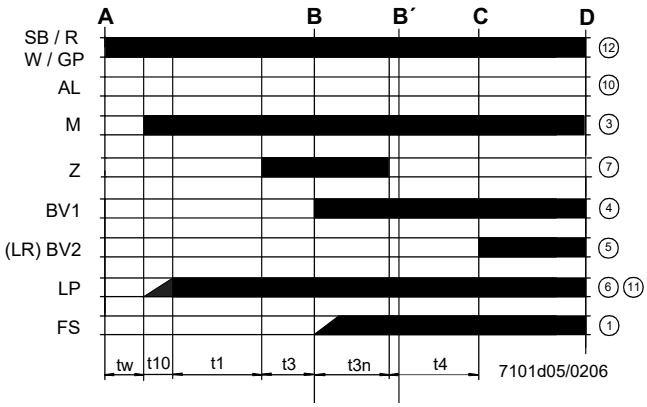

LME22 control sequence

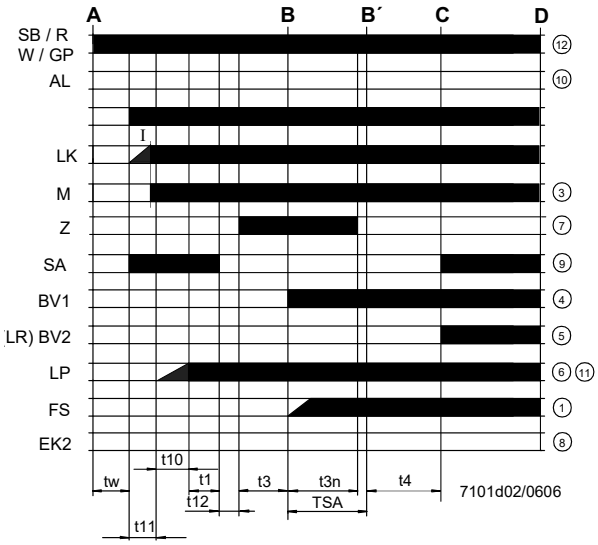

Control sequence

tw	Waiting time
t1	Purge time
TSA	Ignition safety time
t3	Preignition time
t3n	Postignition time
t4	Interval between BV1 and BV2/LR
t10	Specified time for air pressure signal
t11	Programmed opening time for actuator SA
t12	Programmed closing time for actuator SA

LME11 connection diagram

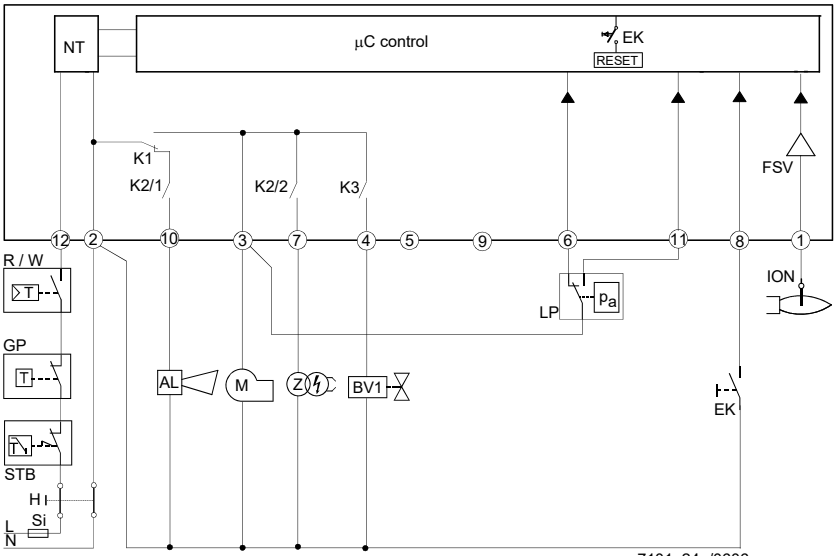

LME21 connection diagram

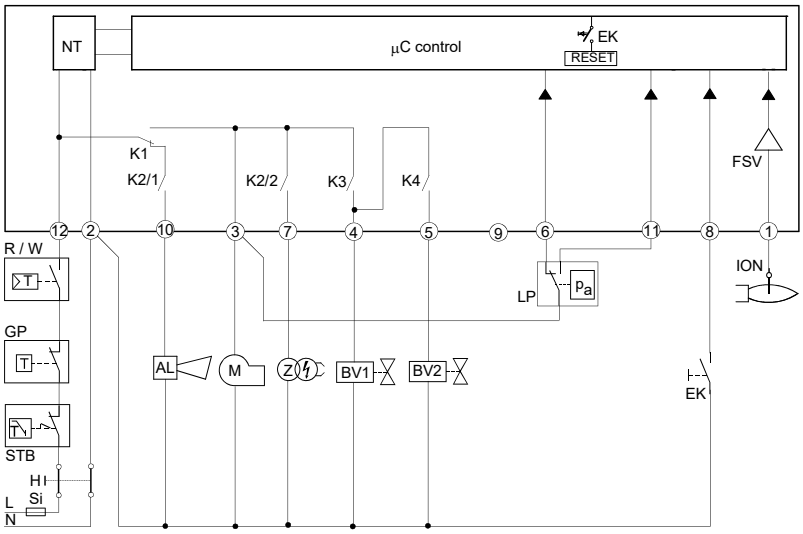

LME22 connection diagram

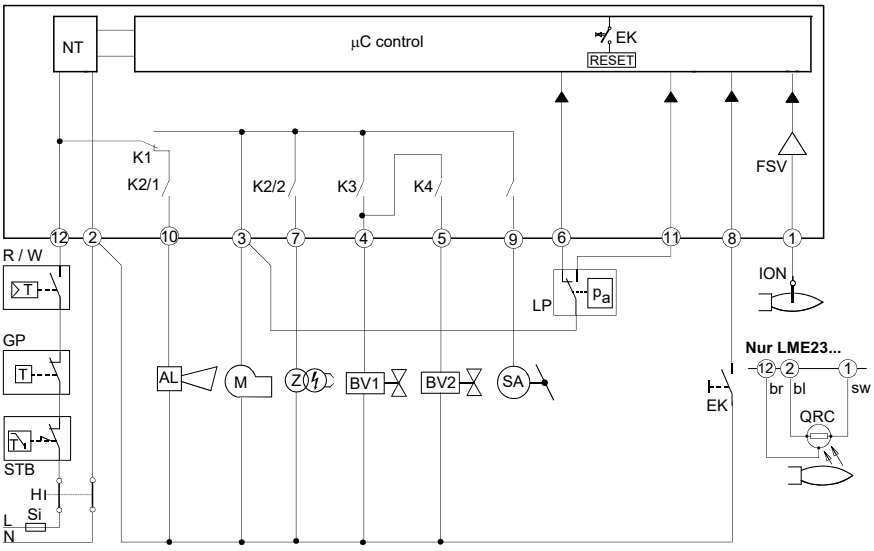

Connection diagram

AL	Error message (alarm)
BV	Fuel valve
EK2	Remote lockout reset button
FS	Flame signal
GP	Gas pressure switch
LP	Air pressure switch
LR	Load controller
M	Fan motor
R	Control thermostat/pressurestat
SB	Safety limit thermostat
W	Limit thermostat /pressure switch
Z	Ignition transformer

CONTROL PROGRAM IN THE EVENT OF FAULT

- If a fault occurs, all outputs will immediately be deactivated (in less than 1s).
- After an interruption of power, a restart will be made with the full program sequence.
- If the operating voltage drops below the undervoltage thresold, a safety shutdown is performed.
- If the operating voltage exceeds the undervoltage thresold, a restart will be performed.
- In case of extraneous light during “t1”, a lockout occurs.
- In case of extraneous light during “tw”, there is a prevention of startup and a lockout after 30 seconds.
- In case of no flame at the end of TSA, there will be max. 3 repetitions of the startup cycle, followed by a lockout at the end of TSA, for mod. LME11..; directly a lockout at the end of TSA for LME21-22 models.
- For LME11 model: if a loss of flame occurs during operation, in case of an establishment of flame at the end of TSA, there will be max. 3 repetitions, otherwise a lockout will occur.
- For LME21-22 models: if a loss of flame occurs during operation, there will be a lockout.
- If the contact of air pressure monitor LP is in working position, a prevention of startup and lockout after 65 seconds will occur.
- IIf the contact of air pressure monitor LP is in normal position, a lockout occurs at the end of t10.
- If no air pressure signal is present after completion of t1, a lockout will occur.

CONTROL BOX LOCKED

In the event of lockout, the LME.. remains locked and the red signal lamp (LED) will light up.The burner control can immediately be reset. This state is also mantained in the case fo mains failure.

DIAGNOSITICS OF THE CASUE OF FAULT

- Press the lockout reset button for more than 3 seconds to activate the visual diagnostics.
- Count the number of blinks of the red signsl lamp and check the fault condition on the “Error code table” (the device repeats the blinks for regular intervals).

During diagnostics, the control outputs are deactivated:

- the burner remains shut down;
- external fault indication is deactivated;
- fault status is showed by the red LED, inside the LME’s lockout reset buttonaccording to the “Error code table”:

ERROR CODE TABLE	
2 blinks **	**No establishment of flame at the end of TSA** - Faulty or soiled fuel valves - Faulty or soiled flame detector - Inadequate adjustement of burner, no fuel - Faulty ignition equipment
3 blinks ***	**The air pressure switch does not switch or remains in idle position:** - LP is faulty - Loss of air pressure signal after t10 - LPis welded in normal position.
4 blinks ****	- Extraneous light when burner starts up.
5 blinks *****	- LP is working position.
6 blinks *****	Free.
7 blinks *******	**Loss of flame during operation** - Faulty or soiled fuel valves - Faulty or soiled flame detector - Inadequate adjustement of burner
8 ÷ 9 blinks	Free
10 blinks **********	**Faulty output contacts** ***Attention: “lockout” remote signal (terminal no. 10) not enabled*** - Wiring error - Anomalous voltage on ouput terminals - Other faults
14 blinks ************ (only for LME4x)**	- CPI contact (gas valve microswitch) not closed.

RESETTING THE BURNER CONTROL

When lockout occurs, the burner control can immediately be reset, by pressing the lockout reset button for about 1..3 seconds. The LME.. can only be reset when all contacts in the line are closed and when there is no undervoltage.

LIMITATION OF REPETITIONS (only for LME11.. model)

If no flame is established at the end of TSA, or if the flame is lost during operation, a maximum of 3 repetitions per controller startup can be performed via “R”, otherwise lockout will be initiated. Counting of repetitions is restarted each time a controlled startup via “R” takes place.

⚠ **Condensation, formation of ice and ingress of water are not permitted!**

TECHNICAL CHARACTERISTICS

Mains voltage	120V AC +10% / -15% 230V AC +10% / -15%
Frequency	50 ... 60 Hz +/- 6%
Power consumption	12VA
External primary fuse	max. 10 A (slow)
input current at terminal 12	max. 5 A
Detection cable length	max. 3m (for electrode)
Detection cable length	max. 20 m (laid separately, for QRA probe)
Reset cable length	max. 20 m (posato separatamente)
Term. 8 & 10 cable length	max. 20 m
Thermostat cable length and other terminals	max. 3 m
Safety class	I
Index of protection	IP40 (to be ensured during mounting)
Operating conditions	-20... +60 °C, < 95% UR
Storage conditions	-20... +60 °C, < 95% UR
Weight	approx. 160 g

C.I.B. UNIGAS S.p.A.
Via L.Galvani, 9 - 35011 Campodarsego (PD) - ITALY
Tel. +39 049 9200944 - Fax +39 049 9200945/9201269
web site: www.cibunigas.it - e-mail: cibunigas@cibunigas.it

Note: Specifications and data subject to change. Errors and omissions excepted.

VERSIONE ALTA-BASSA FIAMMA "AB" / PROGRESSIVO "PR"
"AB" HIGH-LOW / "PR" PROGRESSIVE VERSION

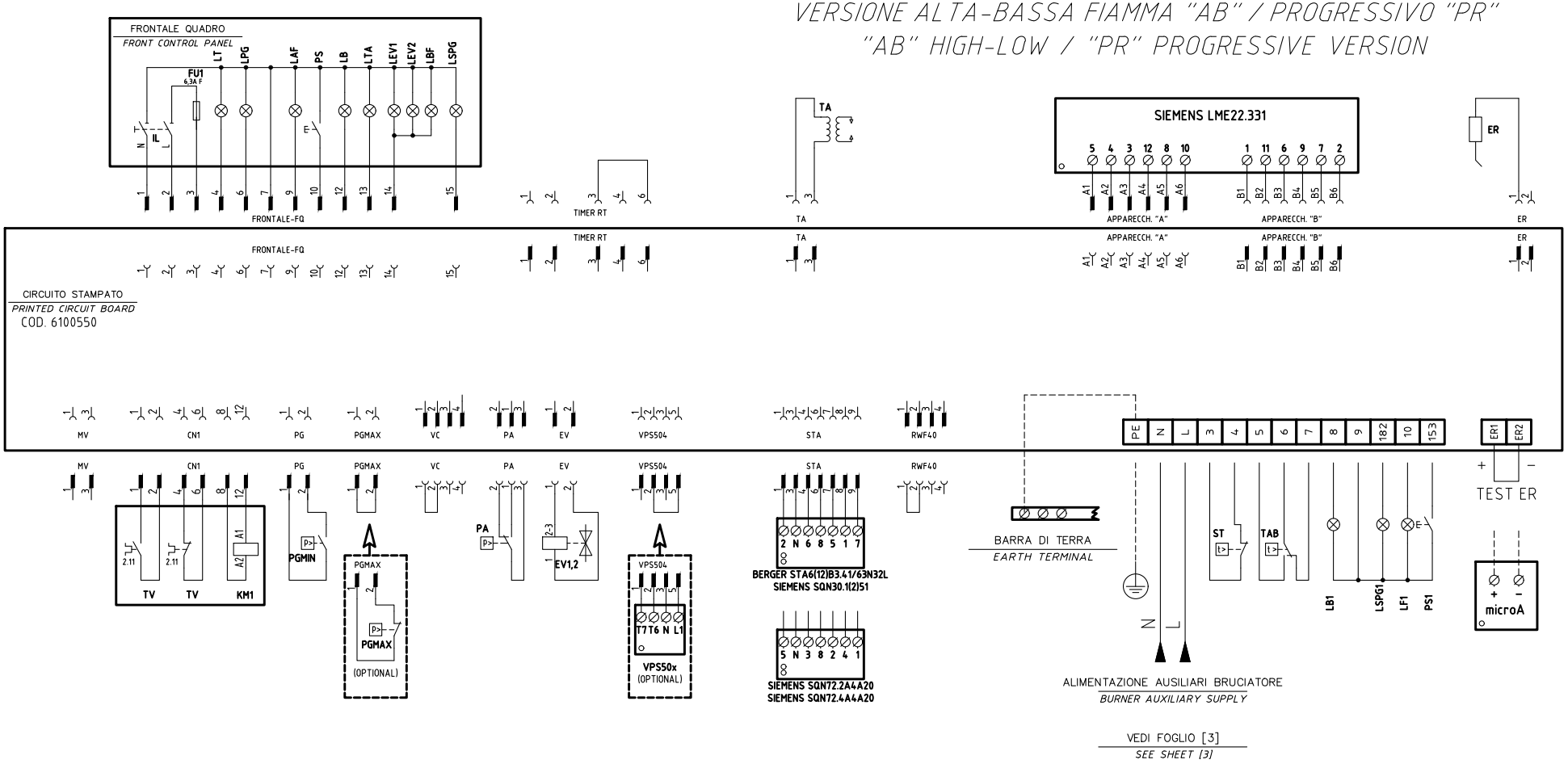

REV.	MODIFICA	DATA	FIRME
03	MODULATOR UPDATE	10/09/14	U. PINTON
02	AGGIUNTO/ADDED RWF40.0xx	07/03/14	U. PINTON
01	AGGIUNTO/ADDED "600V"	20/06/12	U. PINTON

UNIGAS

Impianto: TIPI/TYPES P61 ÷ P73/LX60/LX65/LX72
MODELLO x–.AB(PR)(MD).x.xx.A.xx

Descrizione: VERSIONE "MD" CON RWF5x.xx / 600V / KM3 E SMA+SMF
VERSION "MD" WITH RWF5x.xx / 600V / KM3 AND SMA+SMF

Ordine

Commessa

Esecutore: U. PINTON

Data Controllato: 10/09/2014

Controllato: E. CAVALLI

Data: 18/01/2012

Revisione: 03

Dis. N. 18 – 0236

PREC.: /

FOGLIO: 1

SEGUE: 2

TOTALE: 5

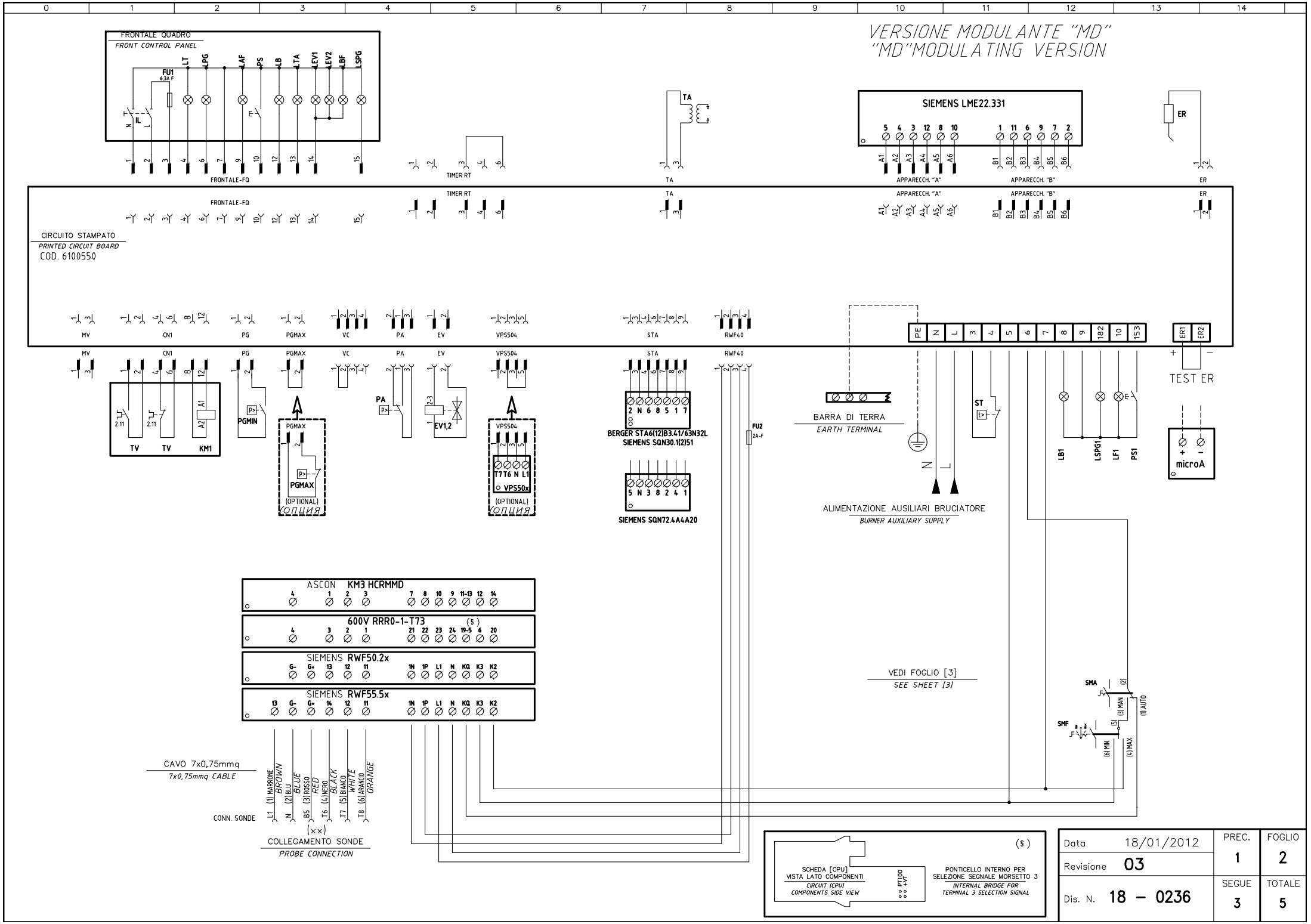
VERSIONE MODULANTE "MD"
"MD" MODULATING VERSION
FRONTALE QUADRO
FRONT CONTROL PANEL
FU1
6,3A F
LT
LPG
LAF
PS
LB
LTA
LEV1
LEV2
LBF
LSPG
IL
FRONTALE-FQ
TIMER RT
TA
SIEMENS LME22.331
APPARECCH. "A"
APPARECCH. "B"
ER
CIRCUITO STAMPATO
PRINTED CIRCUIT BOARD
COD. 6100550
MV
CN1
PG
PGMAX
VC
PA
EV
VPS504
STA
RWF40
PE
N
L
TEST ER
TV
KM1
PGMIN
PGMAX
(OPTIONAL)
ОПЦИЯ
EV1,2
VPS50x
BERGER STA6(12)B3.41/63N32L
SIEMENS SQN30.1(2)51
SIEMENS SQN72.4A4A20
FU2
2A-F
BARRA DI TERRA
EARTH TERMINAL
ST
LB1
LSPG1
LF1
PS1
microA
ALIMENTAZIONE AUSILIARI BRUCIATORE
BURNER AUXILIARY SUPPLY
ASCON KM3 HCRMMD
600V RRR0-1-T73
SIEMENS RWF50.2x
SIEMENS RWF55.5x
VEDI FOGLIO [3]
SEE SHEET [3]
SMA
SMF
(1) AUTO
(3) MAN
(4) MAX
(6) MIN
CAVO 7x0,75mmq
7x0,75mmq CABLE
CONN. SONDE
(1) MARRONE BROWN
(2) BLU BLUE
(3) ROSSO RED
(4) NERO BLACK
(5) BIANCO WHITE
(6) ARANCIO ORANGE
COLLEGAMENTO SONDE
PROBE CONNECTION
SCHEDA [CPU]
VISTA LATO COMPONENTI
CIRCUIT [CPU]
COMPONENTS SIDE VIEW
PT100
+VT
PONTICELLO INTERNO PER
SELEZIONE SEGNALE MORSETTO 3
INTERNAL BRIDGE FOR
TERMINAL 3 SELECTION SIGNAL
Data 18/01/2012
Revisione 03
Dis. N. 18 – 0236
PREC. 1
FOGLIO 2
SEGUE 3
TOTALE 5

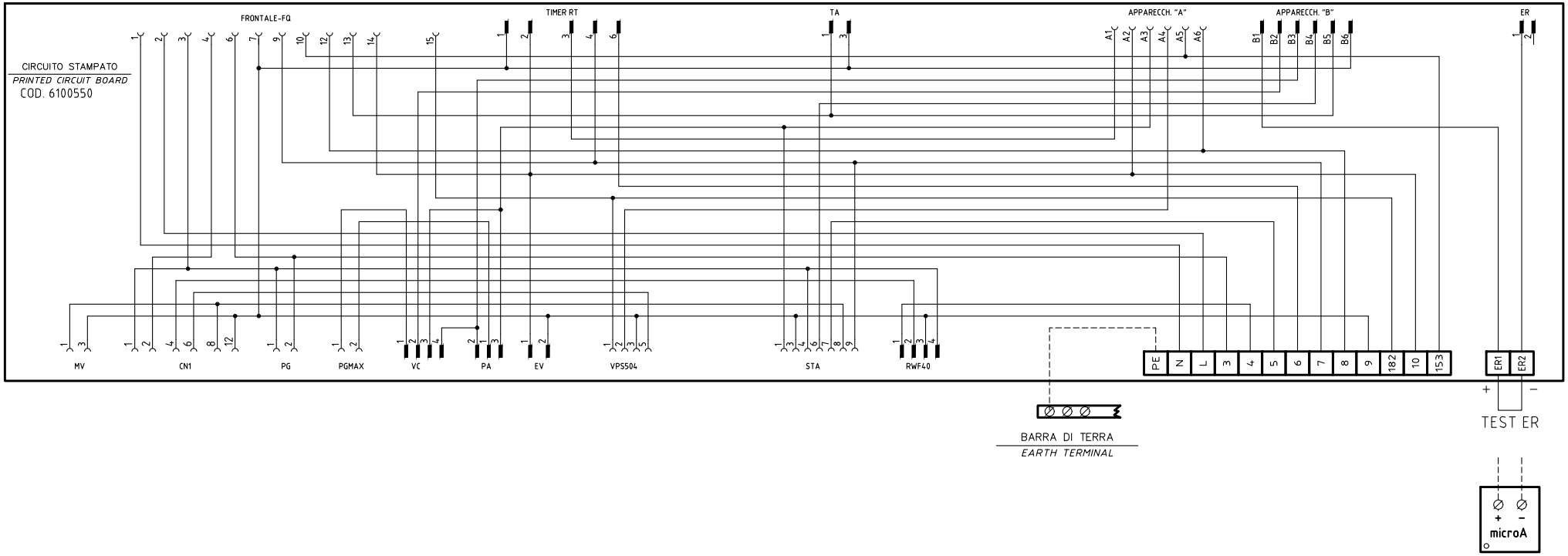

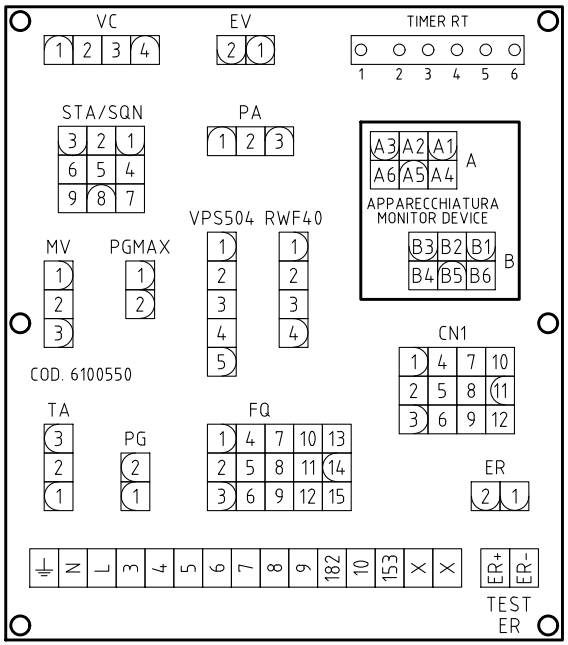

SERVOCOMANDO SERRANDA ARIA
AIR DAMPER ACTUATOR
BERGER STA6(12)B3.41/63N32L

ST2	ALTA FIAMMA *HIGH FLAME*
ST0	SOSTA *STAND-BY*
ST1	BASSA FIAMMA *LOW FLAME*
MV	NON USATA *NOT USED*

SERVOCOMANDO SERRANDA ARIA (ALTERNATIVO)
AIR DAMPER ACTUATOR (ALTERNATIVE)
SIEMENS SQN30.1(2)51A

I	ALTA FIAMMA *HIGH FLAME*
II	SOSTA *STAND-BY*
III	BASSA FIAMMA *LOW FLAME*
V	NON USATA *NOT USED*

SERVOCOMANDO SERRANDA ARIA (ALTERNATIVO)
AIR DAMPER ACTUATOR (ALTERNATIVE)
SIEMENS SQN72.xA4A20

I (ROSSO) *I (RED)*	ALTA FIAMMA *HIGH FLAME*
II (BLU) *II (BLUE)*	SOSTA *STAND-BY*
III (ARANCIO) *III (ORANGE)*	BASSA FIAMMA *LOW FLAME*
IV (NERO) *IV (BLACK)*	NON USATA *NOT USED*

Data	18/01/2012	PREC.	FOGLIO
Revisione	03	2	3
Dis. N.	18 – 0236	SEGUE	TOTALE
		4	5

(××)

ATTENZIONE COLLEGAMENTO SONDE CON CONNETTORE 7 POLI

WARNING PROBE CONNECTION WITH 7 PINS CONNECTOR

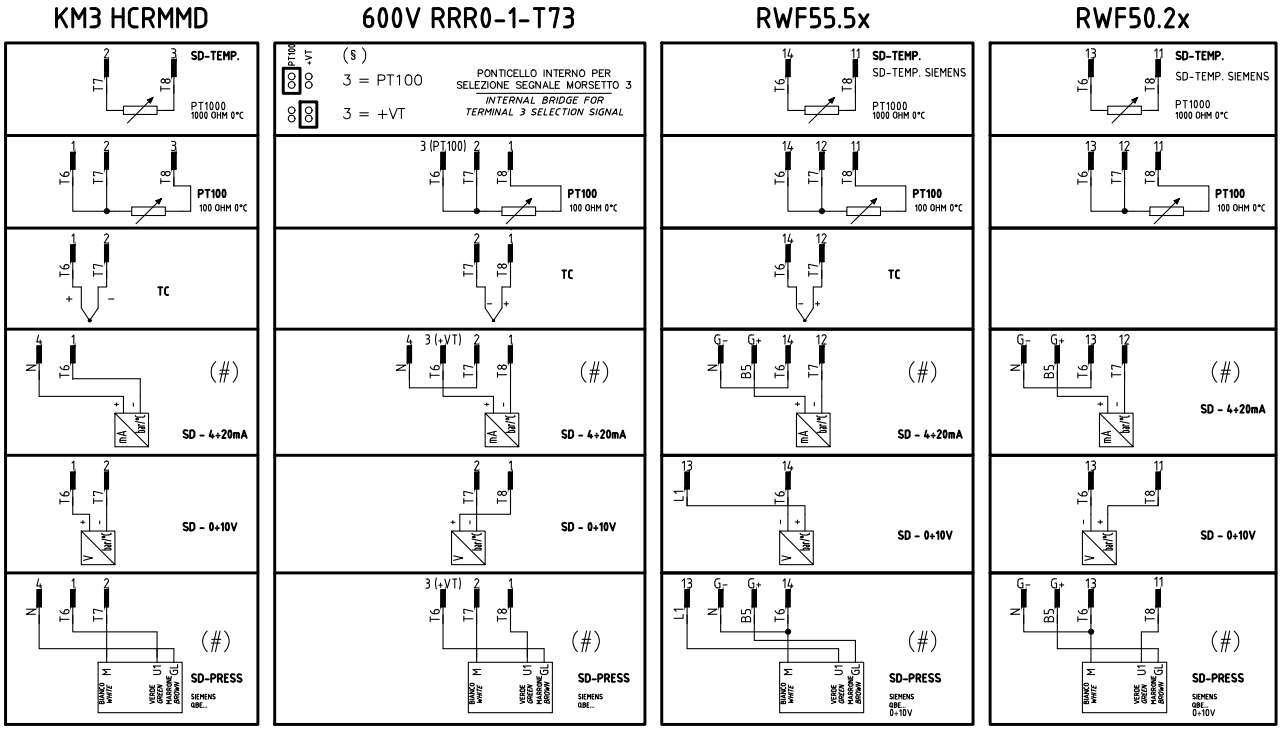

(#)
COLLEGAMENTO SOLO PER TRASDUTTORI PASSIVI
TRASDUCER PASSIVE CONNECTION ONLY

QG - MC1

MORSETTIERA COLLEGAMENTO LINEA E MOTORE TRIFASE

MOTOR THREE PHASES AND ELECTRIC SUPPLY CONNECTION TERMINAL BOARD

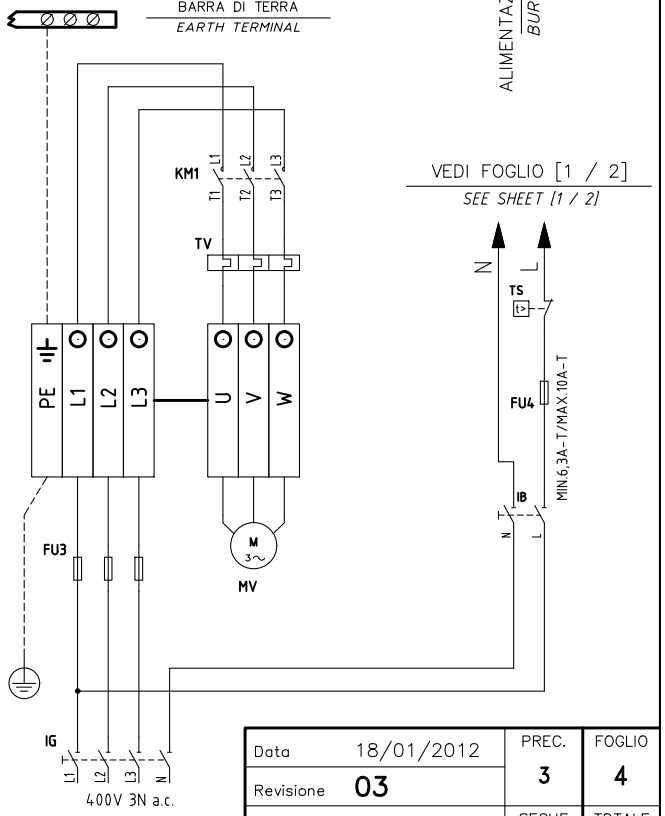

Data	18/01/2012	PREC. 3	FOGLIO 4
Revisione	03		
Dis. N.	18 – 0236	SEGUE 5	TOTALE 5

Sigla/Item	Funzione	Function
600V RRR0-1-T73	REGOLATORE MODULANTE (ALTERNATIVO)	BURNER MODULATOR (ALTERNATIVE)
BERGER STA6(12)B3.41/63N32L	SERVOCOMANDO SERRANDA ARIA	AIR DAMPER ACTUATOR
ER	ELETTRODO RILEVAZIONE FIAMMA	FLAME DETECTION ELECTRODE
EV1,2	ELETTROVALVOLE GAS (O GRUPPO VALVOLE)	GAS ELECTRO-VALVES (OR VALVES GROUP)
FU1	FUSIBILE DI LINEA	LINE FUSE
FU2	FUSIBILE AUSILIARIO	AUXILIARY FUSE
FU3	FUSIBILI LINEA MOTORE VENTILATORE	FAN MOTOR LINE FUSES
FU4	FUSIBILE DI LINEA	LINE FUSE
IB	INTERRUTTORE LINEA BRUCIATORE	BURNER LINE SWITCH
IG	INTERRUTTORE GENERALE	MAINS SWITCH
IL	INTERRUTTORE LINEA AUSILIARI	AUXILIARY LINE SWITCH
KM1	CONTATTORE MOTORE VENTILATORE	FAN MOTOR CONTACTOR
KM3 HCRMMD	REGOLATORE MODULANTE (ALTERNATIVO)	BURNER MODULATOR (ALTERNATIVE)
LAF	LAMPADA SEGNALAZIONE ALTA FIAMMA BRUCIATORE	BURNER IN HIGH FLAME INDICATOR LIGHT
LB	LAMPADA SEGNALAZIONE BLOCCO BRUCIATORE	INDICATOR LIGHT FOR BURNER LOCK-OUT
LB1	LAMPADA SEGNALAZIONE BLOCCO BRUCIATORE	INDICATOR LIGHT FOR BURNER LOCK-OUT
LBF	LAMPADA SEGNALAZIONE BASSA FIAMMA BRUCIATORE	BURNER IN LOW FLAME INDICATOR LIGHT
LEV1	LAMPADA SEGNALAZIONE APERTURA [EV1]	INDICATOR LIGHT FOR OPENING OF ELECTRO-VALVE [EV1]
LEV2	LAMPADA SEGNALAZIONE APERTURA [EV2]	INDICATOR LIGHT FOR OPENING OF ELECTRO-VALVE [EV2]
LF1	LAMPADA SEGNALAZIONE FUNZIONAMENTO BRUCIATORE	INDICATOR LIGHT BURNER OPERATION
LPG	LAMPADA SEGNALAZIONE PRESENZA GAS IN RETE	INDICATOR LIGHT FOR PRESENCE OF GAS IN THE NETWORK
LSPG	LAMPADA SEGNALAZIONE BLOCCO CONTROLLO TENUTA VALVOLE	INDICATOR LIGHT FOR LEAKAGE OF VALVES
LSPG1	LAMPADA SEGNALAZIONE BLOCCO CONTROLLO TENUTA VALVOLE	INDICATOR LIGHT FOR LEAKAGE OF VALVES
LT	LAMPADA SEGNALAZIONE BLOCCO TERMICO	INDICATOR LIGHT FOR MOTOR OVERLOAD THERMAL CUTOUT
LTA	LAMPADA SEGNALAZIONE TRASFORMATORE DI ACCENSIONE	IGNITION TRANSFORMER INDICATOR LIGHT
MV	MOTORE VENTILATORE	FAN MOTOR
PA	PRESSOSTATO ARIA	AIR PRESSURE SWITCH
PGMAX	PRESSOSTATO GAS DI MASSIMA PRESSIONE	MAXIMUM PRESSURE GAS SWITCH
PGMIN	PRESSOSTATO GAS DI MINIMA PRESSIONE	MINIMUM GAS PRESSURE SWITCH
PS	PULSANTE SBLOCCO FIAMMA	FLAME UNLOCK BUTTON
PS1	PULSANTE SBLOCCO FIAMMA	FLAME UNLOCK BUTTON
PT100	SONDA DI TEMPERATURA	TEMPERATURE PROBE
RWF50.2x	REGOLATORE MODULANTE (ALTERNATIVO)	BURNER MODULATOR (ALTERNATIVE)
RWF55.5x	REGOLATORE MODULANTE (ALTERNATIVO)	BURNER MODULATOR (ALTERNATIVE)
SD-PRESS	SONDA DI PRESSIONE	PRESSURE PROBE
SD-TEMP.	SONDA DI TEMPERATURA	TEMPERATURE PROBE
SD - 0÷10V	TRASDUTTORE USCITA IN TENSIONE	TRANSDUCER VOLTAGE OUTPUT
SD - 4÷20mA	TRASDUTTORE USCITA IN CORRENTE	TRANSDUCER CURRENT OUTPUT
SIEMENS LME22.331	APPARECCHIATURA CONTROLLO FIAMMA	CONTROL BOX
SIEMENS SQN30.1(2)51	SERVOCOMANDO SERRANDA ARIA (ALTERNATIVO)	AIR DAMPER ACTUATOR (ALTERNATIVE)
SIEMENS SQN72.2A4A20	SERVOCOMANDO SERRANDA ARIA (ALTERNATIVO)	AIR DAMPER ACTUATOR (ALTERNATIVE)
SIEMENS SQN72.4A4A20	SERVOCOMANDO SERRANDA ARIA (ALTERNATIVO)	AIR DAMPER ACTUATOR (ALTERNATIVE)
SMA	SELETTORE MANUALE/AUTOMATICO	MANUAL/AUTOMATIC SWITCH
SMF	SELETTORE MANUALE FUNZIONAMENTO MIN-0-MAX	MIN-0-MAX MANUAL OPERATION SWITCH
ST	SERIE TERMOSTATI/PRESSOSTATI	SERIES OF THERMOSTATS OR PRESSURE SWITCHES
TA	TRASFORMATORE DI ACCENSIONE	IGNITION TRANSFORMER
TAB	TERMOSTATO/PRESSOSTATO ALTA-BASSA FIAMMA	HIGH-LOW THERMOSTAT/PRESSURE SWITCHES
TC	TERMOCOPPIA	THERMOCOUPLE
TS	TERMOSTATO/PRESSOSTATO DI SICUREZZA	SAFETY THERMOSTAT OR PRESSURE SWITCH
TV	TERMICO MOTORE VENTILATORE	FAN MOTOR THERMAL
VPS50x	CONTROLLO DI TENUTA VALVOLE GAS (OPTIONAL)	GAS PROVING SYSTEM (OPTIONAL)
microA	MICROAMPEROMETRO	MICROAMMETER