# C83X

## *With flue gas recirculation*

## *LMV2/3x*

## *Microprocessor controlled*

## *Gas burners*

**MANUAL OF INSTALLATION - USE - MAINTENANCE**

CIB UNIGAS

**BURNERS - BRUCIATORI - BRULERS - BRENNER - QUEMADORES - ГОРЕЛКИ**

M039539CC Rel 0.0 05/2021

## DANGERS, WARNINGS AND NOTES OF CAUTION

**THIS MANUAL IS SUPPLIED AS AN INTEGRAL AND ESSENTIAL PART OF THE PRODUCT AND MUST BE DELIVERED TO THE USER.**

**INFORMATION INCLUDED IN THIS SECTION ARE DEDICATED BOTH TO THE USER AND TO PERSONNEL FOLLOWING PRODUCT INSTALLATION AND MAINTENANCE.**

**THE USER WILL FIND FURTHER INFORMATION ABOUT OPERATING AND USE RESTRICTIONS, IN THE SECOND SECTION OF THIS MANUAL. WE HIGHLY RECOMMEND TO READ IT.**

**CAREFULLY KEEP THIS MANUAL FOR FUTURE REFERENCE.**

### 1) GENERAL INTRODUCTION

- The equipment must be installed in compliance with the regulations in force, following the manufacturer's instructions, by qualified personnel.
- Qualified personnel means those having technical knowledge in the field of components for civil or industrial heating systems, sanitary hot water generation and particularly service centres authorised by the manufacturer.
- Improper installation may cause injury to people and animals, or damage to property, for which the manufacturer cannot be held liable.
- Remove all packaging material and inspect the equipment for integrity.

In case of any doubt, do not use the unit - contact the supplier.

The packaging materials (wooden crate, nails, fastening devices, plastic bags, foamed polystyrene, etc), should not be left within the reach of children, as they may prove harmful.

- Before any cleaning or servicing operation, disconnect the unit from the mains by turning the master switch OFF, and/or through the cut-out devices that are provided.
- Make sure that inlet or exhaust grilles are unobstructed.
- In case of breakdown and/or defective unit operation, disconnect the unit. Make no attempt to repair the unit or take any direct action.

Contact qualified personnel only.

Units shall be repaired exclusively by a servicing centre, duly authorised by the manufacturer, with original spare parts and accessories.

Failure to comply with the above instructions is likely to impair the unit's safety.

To ensure equipment efficiency and proper operation, it is essential that maintenance operations are performed by qualified personnel at regular intervals, following the manufacturer's instructions.

- When a decision is made to discontinue the use of the equipment, those parts likely to constitute sources of danger shall be made harmless.
- In case the equipment is to be sold or transferred to another user, or in case the original user should move and leave the unit behind, make sure that these instructions accompany the equipment at all times so that they can be consulted by the new owner and/or the installer.
- This unit shall be employed exclusively for the use for which it is meant. Any other use shall be considered as improper and, therefore, dangerous.

The manufacturer shall not be held liable, by agreement or otherwise, for damages resulting from improper installation, use and failure to comply with the instructions supplied by the manufacturer.The occurrence of any of the following circustances may cause explosions, polluting unburnt gases (example: carbon monoxide CO), burns, serious harm to people, animals and things:

- Failure to comply with one of the WARNINGS in this chapter
- Incorrect handling, installation, adjustment or maintenance of the burner
- Incorrect use of the burner or incorrect use of its parts or optional supply

### 2) SPECIAL INSTRUCTIONS FOR BURNERS

- The burner should be installed in a suitable room, with ventilation openings complying with the requirements of the regulations in force, and sufficient for good combustion.
- Only burners designed according to the regulations in force should be used.
- This burner should be employed exclusively for the use for which it was designed.
- Before connecting the burner, make sure that the unit rating is the same as delivery mains (electricity, gas oil, or other fuel).
- Observe caution with hot burner components. These are, usually, near to the flame and the fuel pre-heating system, they become hot during the unit operation and will remain hot for some time after the burner has stopped.

When the decision is made to discontinue the use of the burner, the user shall have qualified personnel carry out the following operations:

a Remove the power supply by disconnecting the power cord from the mains.

b Disconnect the fuel supply by means of the hand-operated shut-off valve and remove the control handwheels from their spindles.

**Special warnings**

- Make sure that the burner has, on installation, been firmly secured to the appliance, so that the flame is generated inside the appliance fire-box.
- Before the burner is started and, thereafter, at least once a year, have qualified personnel perform the following operations:

a set the burner fuel flow rate depending on the heat input of the appliance;

b set the flow rate of the combustion-supporting air to obtain a combustion efficiency level at least equal to the lower level required by the regulations in force;

c check the unit operation for proper combustion, to avoid any harmful or polluting unburnt gases in excess of the limits permitted by the regulations in force;

d make sure that control and safety devices are operating properly;

e make sure that exhaust ducts intended to discharge the products of combustion are operating properly;

f on completion of setting and adjustment operations, make sure that all mechanical locking devices of controls have been duly tightened;

g make sure that a copy of the burner use and maintenance instructions is available in the boiler room.

- In case of a burner shut-down, reser the control box by means of the RESET pushbutton. If a second shut-down takes place, call the Technical Service, **without trying to RESET further**.
- The unit shall be operated and serviced by qualified personnel only, in compliance with the regulations in force.

### 3) GENERAL INSTRUCTIONS DEPENDING ON FUEL USED

### 3a) ELECTRICAL CONNECTION

- For safety reasons the unit must be efficiently earthed and installed as required by current safety regulations.
- It is vital that all saftey requirements are met. In case of any doubt, ask for an accurate inspection of electrics by qualified personnel, since the manufacturer cannot be held liable for damages that may be caused by failure to correctly earth the equipment.
- Qualified personnel must inspect the system to make sure that it is adequate to take the maximum power used by the equipment shown on the equipment rating plate. In particular, make sure that the system cable cross section is adequate for the power absorbed by the unit.
- No adaptors, multiple outlet sockets and/or extension cables are permitted to connect the unit to the electric mains.
- An omnipolar switch shall be provided for connection to mains, as required by the current safety regulations.
- The use of any power-operated component implies observance of a few basic rules, for example:
  -do not touch the unit with wet or damp parts of the body and/or with bare feet;
  - do not pull electric cables;
  - do not leave the equipment exposed to weather (rain, sun, etc.) unless expressly required to do so;
  - do not allow children or inexperienced persons to use equipment;
- The unit input cable shall not be replaced by the user.
  In case of damage to the cable, switch off the unit and contact qualified personnel to replace.
  When the unit is out of use for some time the electric switch supplying all the power-driven components in the system (i.e. pumps, burner, etc.) should be switched off.

## 3b) FIRING WITH GAS, LIGHT OIL OR OTHER FUELS

### GENERAL

- The burner shall be installed by qualified personnel and in compliance with regulations and provisions in force; wrong installation can cause injuries to people and animals, or damage to property, for which the manufacturer cannot be held liable.
- Before installation, it is recommended that all the fuel supply system pipes be carefully cleaned inside, to remove foreign matter that might impair the burner operation.
- Before the burner is commissioned, qualified personnel should inspect the following:

a the fuel supply system, for proper sealing;
b the fuel flow rate, to make sure that it has been set based on the firing rate required of the burner;
c the burner firing system, to make sure that it is supplied for the designed fuel type;
d the fuel supply pressure, to make sure that it is included in the range shown on the rating plate;
e the fuel supply system, to make sure that the system dimensions are adequate to the burner firing rate, and that the system is equipped with all the safety and control devices required by the regulations in force.

- When the burner is to remain idle for some time, the fuel supply tap or taps should be closed.

### SPECIAL INSTRUCTIONS FOR USING GAS

Have qualified personnel inspect the installation to ensure that:

a the gas delivery line and train are in compliance with the regulations and provisions in force;
b all gas connections are tight;
c the boiler room ventilation openings are such that they ensure the air supply flow required by the current regulations, and in any case are sufficient for proper combustion.

- Do not use gas pipes to earth electrical equipment.
- Never leave the burner connected when not in use. Always shut the gas valve off.
- In case of prolonged absence of the user, the main gas delivery valve to the burner should be shut off.

**Precautions if you can smell gas**

a do not operate electric switches, the telephone, or any other item likely to generate sparks;
b immediately open doors and windows to create an air flow to purge the room;
c close the gas valves;
d contact qualified personnel.

- Do not obstruct the ventilation openings of the room where gas appliances are installed, to avoid dangerous conditions such as the development of toxic or explosive mixtures.

### DIRECTIVES AND STANDARDS

***Gas burners***

**European directives**

-Regulation 2016/426/UE (appliances burning gaseous fuels)
-2014/35/UE (Low Tension Directive)
-2014/30/UE (Electromagnetic compatibility Directive)
-2006/42/EC (Machinery Directive)

**Harmonized standards**

-UNI EN 676 (Automatic forced draught burners for gaseous fuels)
-EN 55014-1 (Electromagnetic compatibility- Requirements for house hold appliances, electric tools and similar apparatus)
-EN 60204-1:2006 (Safety of machinery – Electrical equipment of machines.)
-CEI EN 60335-1 (Specification for safety of household and similar electrical appliances);
-CEI EN 60335-2-102 (Household and similar electrical appliances. Safety. Particular requirements for gas, oil and solid-fuel burning appliances having electrical connections).
-UNI EN ISO 12100:2010 (Safety of machinery - General principles for design - Risk assessment and risk reduction);

***Light oil burners***

**European directives**

-2014/35/UE (Low Tension Directive)
-2014/30/UE (Electromagnetic compatibility Directive)
-2006/42/EC (Machinery Directive)

**Harmonized standards**

-UNI EN 267-2011(Automatic forced draught burners for liquid fuels)
-EN 55014-1 (Electromagnetic compatibility- Requirements for house hold appliances, electric tools and similar apparatus)
-EN 60204-1:2006 (Safety of machinery – Electrical equipment of machines.)
-CEI EN 60335-1 (Specification for safety of household and similar electrical appliances);
-CEI EN 60335-2-102 (Household and similar electrical appliances. Safety. Particular requirements for gas, oil and solid-fuel burning appliances having electrical connections).
-UNI EN ISO 12100:2010 (Safety of machinery - General principles for design - Risk assessment and risk reduction);

**National Standard**

-UNI 7824 (Atomizing burners of the monobloc type. Characteristics and test methods)

***Heavy oil burners***

**European Directives**

-2014/35/UE (Low Tension Directive)
-2014/30/UE (Electromagnetic compatibility Directive)
-2006/42/EC (Machinery Directive)

**Harmonized standards**

-UNI EN 267(Automatic forced draught burners for liquid fuels)
-EN 55014-1 (Electromagnetic compatibility- Requirements for house hold appliances, electric tools and similar apparatus)
-EN 60204-1:2006 (Safety of machinery – Electrical equipment of machines.)
-CEI EN 60335-1 (Specification for safety of household and similar electrical appliances);
-CEI EN 60335-2-102 (Household and similar electrical appliances. Safety. Particular requirements for gas, oil and solid-fuel burning appliances having electrical connections).
-UNI EN ISO 12100:2010 (Safety of machinery - General principles for design - Risk assessment and risk reduction);

**Norme nazionali / National Standard**

-UNI 7824 (Atomizing burners of the monobloc type. Characteristics and test methods.

### *Gas - Light oil burners*

**European Directives**

-Regulation 2016/426/UE (appliances burning gaseous fuels)
-2014/35/UE (Low Tension Directive)
-2014/30/UE (Electromagnetic compatibility Directive)
-2006/42/EC (Machinery Directive)

**Harmonized standards**

-UNI EN 676 (Automatic forced draught burners for gaseous fuels)
-UNI EN 267(Automatic forced draught burners for liquid fuels)
-EN 55014-1 (Electromagnetic compatibility- Requirements for house hold appliances, electric tools and similar apparatus)
-EN 60204-1:2006 (Safety of machinery – Electrical equipment of machines.)
-CEI EN 60335-1 (Specification for safety of household and similar electrical appliances);
-CEI EN 60335-2-102 (Household and similar electrical appliances. Safety. Particular requirements for gas, oil and solid-fuel burning appliances having electrical connections).
-UNI EN ISO 12100:2010 (Safety of machinery - General principles for design - Risk assessment and risk reduction);

**Norme nazionali / National Standard**

-UNI 7824 (Atomizing burners of the monobloc type. Characteristics and test methods.

### *Gas - Heavy oil burners*

**European directives:**

-Regulation 2016/426/UE (appliances burning gaseous fuels)
-2014/35/UE (Low Tension Directive)
-2014/30/UE (Electromagnetic compatibility Directive)
-2006/42/EC (Machinery Directive)

**Harmonized standards**

-UNI EN 676 (Automatic forced draught burners for gaseous fuels)
-EN 55014-1 (Electromagnetic compatibility- Requirements for house hold appliances, electric tools and similar apparatus)
-EN 60204-1:2006 (Safety of machinery – Electrical equipment of machines.)
-CEI EN 60335-1 (Specification for safety of household and similar electrical appliances);
-CEI EN 60335-2-102 (Household and similar electrical appliances. Safety. Particular requirements for gas, oil and solid-fuel burning appliances having electrical connections).
-UNI EN ISO 12100:2010 (Safety of machinery - General principles for design - Risk assessment and risk reduction);

**National Standard**

- UNI 7824 (Atomizing burners of the monobloc type. Characteristics and test methods.

### *Industrial burners*

**European directives**

-Regulation 2016/426/UE (appliances burning gaseous fuels)
-2014/35/UE (Low Tension Directive)
-2014/30/UE (Electromagnetic compatibility Directive)
-2006/42/EC (Machinery Directive)

**Harmonized standards**

-EN 55014-1 (Electromagnetic compatibility- Requirements for house hold appliances, electric tools and similar apparatus)
-EN 746-2 (Industrial thermoprocessing equipment - Part 2: Safety requirements for combustion and fuel handling systems)
-UNI EN ISO 12100:2010 (Safety of machinery - General principles for design - Risk assessment and risk reduction);
-EN 60204-1:2006 (Safety of machinery – Electrical equipment of machines.)
-EN 60335-2 (Electrical equipment of non-electric appliances for household and similar purposes. Safety requirements)

## Burner data plate

For the following information, please refer to the data plate:

- burner type and burner model: must be reported in any communication with the supplier
- burner ID (serial number): must be reported in any communication with the supplier
- date of production (year and month)
- information about fuel type and network pressure

| | |
|---|---|
| Type | -- |
| Model | -- |
| Year | -- |
| S.Number | -- |
| Output | -- |
| Oil Flow | -- |
| Fuel | -- |
| Category | -- |
| Gas Pressure | -- |
| Viscosity | -- |
| El.Supply | -- |
| El.Consump. | -- |
| Fan Motor | -- |
| Protection | -- |
| Drwaing n° | -- |
| P.I.N. | -- |

## SYMBOLS USED

***WARNING!*** Failure to observe the warning may result in irreparable damage to the unit or damage to the environment

***DANGER!*** Failure to observe the warning may result in serious injuries or death.

***WARNING!*** Failure to observe the warning may result in electric shock with lethal consequences

Figures, illustrations and images used in this manual may differ in appearance from the actual product.

# PART I: SPECIFICATIONS

## BURNERS FEATURES

Note: the figure is indicative only

1 Control panel with startup switch
2 Gas train
3 Electrical panel
4 Cover
5 Blast tube + Combustion head
6 Flange
7 Silencer
8 Actuator
9 FGR, flue gas recirculation (only for FGR type burners)
10 Air pressure switch
11 Combustion head adjusting ring nut
12 Sector variable

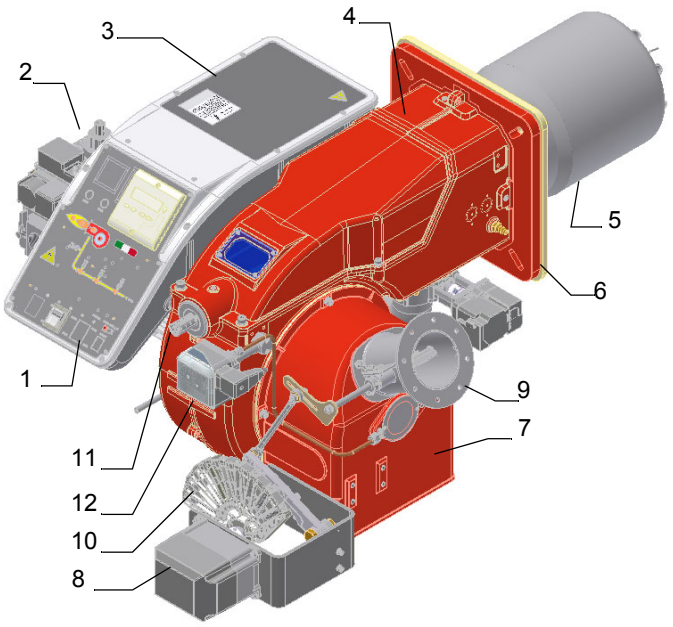


**Gas operation:** From the supply line the gas fuel passes through the gas train (filter, safety valves, gas pressure regulator and butterfly valve). The pressure regulator sets the gas pressure within the combustion head utilization limits. Air is supplied by a fan, which may be onboard or separated depending on burner configuration, and is channeled through an air damper.

The air damper and the gas butterfly valve are actuated by servomotors according to load curves, in order to achieve the correct proportion between fuel and air flows, and to optimize flue gas parameters.

The adjustable combustion head can improve the burner performance by controlling the flame geometry and combustion efficiency.

Fuel and air are routed through separated channels inside the combustion head, then mixed to ignite the flame inside the combustion chamber. The ignition spark is provided by electrodes and a high voltage transformer (a pilot flame may also be employed, depending on burner configuration).

Pre-ventilation of the combustion chamber is usually implemented according to gas directives.

The control panel, onboard or separated, allows the operator to monitor each operating phase.

## Burner model identification

Burners are identified by burner type and model. Burner model identification is described as follows.

| Type | C83X | Model | M-. | MD. | SP. | *. | A. | 1. | 80. | EA. | .FGR |
|---|---|---|---|---|---|---|---|---|---|---|---|
| | (1) | | (2) | (3) | (4) | (5) | (6) | (7) | (8) | (9) | (10) |

| | | |
|---|---|---|
| 1 | BURNER TYPE | **C83X** |
| 2 | FUEL | M - Natural gas, B - Biogas, |
| 3 | OPERATION (Available versions) | PR - Progressive - MD - Fully modulating |
| 4 | BLAST TUBE AND AIR INLET CONFIGURATION | SP = Standard blast tube + aluminum air intake<br>LP = Extended blast tube + aluminum air intake |
| 5 | DESTINATION COUNTRY | * - see data plate |
| 6 | BURNER VERSION | A - Standard, Y - Special |
| 7 | EQUIPMENT | 0 = 2 gas valves<br>1 = 2 gas valves + gas proving system<br>7 = 2 gas valves + maximum gas pressure switch<br>8 = 2 gas valves + gas proving system + maximum gas pressure switch |
| 8 | GAS CONNECTION<br>see Specifications | 32 = $Rp1_{1/4}$<br>40 = $Rp1_{1/2}$ 50 = Rp2<br>65 = DN65 80 = DN80 |
| 9 | MICRO-PROCESSOR CONTROL | EA = micro-processor control, without inverter<br>EB = micro-processor control, with inverter |
| 10 | FGR | Flue gas recirculation |

## Fuel

| | |
|---|---|
| Type | -- |
| Model | -- |
| Year | -- |
| S.Number | -- |
| Output | -- |
| Oil Flow | -- |
| Fuel | -- |
| Category | -- |
| Gas Pressure | -- |
| Viscosity | -- |
| El.Supply | -- |
| El.Consump. | -- |

***WARNING! The burner must be used only with the fuel specified in the burner data plate .***

The burner technical specifications, described in this manual, refer to natural gas (calorific net value Hi = 9.45 kWh/Stm$^3$, density ρ = 0.717 Kg/Stm$^3$). For different fuel such as LPG, town gas and biogas, multiply the values of flow and pressure by th corrective factors shown in the table below.

| **Fuel** | **Hi** (KWh/Stm$^3$) | **ρ** (kg/Stm$^3$) | $f_Q$ | $f_p$ |
|---|---|---|---|---|
| LPG | 26,79 | 2,151 | 0,353 | 0,4 |
| Town gas | 4,88 | 0,6023 | 1,936 | 3,3 |
| Biogas | 6,395 | 1,1472 | 1,478 | 3,5 |

For example, to obtain the flow and pressure values for the biogas:

$$Q_{biogas} = Q_{naturalGas} \cdot 1,478$$

$$p_{biogas} = p_{naturalGas} \cdot 3,5$$

***ATTENTION! The combustion head type and the settings depend on the fuel. The burner must be used only for its intended purpose specified in the burner data plate .***

***ATTENTION! The corrective factors in the above table depend on the gas composition, so on the calorifc value and the density of the gas. The above value can be taken only as reference.***

## *Technical Specifications*

| BURNER TYPE | | C83X M-.. |
|---|---|---|
| Output | min. - max. kW | 200 - 750 |
| Fuel | | Natural gas |
| Category | | see next paragraph |
| Gas flow rate | min.-max. $Stm^3/h$ | 21 - 79 |
| Gas pressure | min.-max. mbar | (see Note 2) |
| Electric supply | | 230V 3~ / 400V 3N ~ 50Hz |
| Total power consumption | kW | 1,6 |
| Fan motor | kW | 1,1 |
| Protection | | IP40 |
| Operation | | Progressive - Fully modulating |
| Valves size / Gas connection - 32 | | $1"_{1/4}$ / Rp $1_{1/4}$ |
| Valves size / Gas connection - 40 | | $1"_{1/2}$ / Rp $1_{1/2}$ |
| Valves size / Gas connection - 50 | | 2" / Rp 2 |
| Valves size / Gas connection - 65 | | $2"_{1/2}$ / DN65 |
| Operating temperature | °C | -10 ÷ +50 |
| Storage Temperature | °C | -20 ÷ +60 |
| Working service (*) | | Intermitent |

| | |
|---|---|
| **Note1:** | **All gas flow rates are referred to $Stm^3$ / h (1.013 mbar absolute pressure, 15 °C temperature) and are valid for G20 gas (net calorific value $H_i$ = 34,02 MJ / $Stm^3$); for L.P.G. (net calorific value $H_i$ = 93,5 MJ / $Stm^3$)** |
| **Note2:** | **Maximum gas pressure = 360 mbar (with Dungs MBDLE)**<br>**= 500 mbar (with Siemens VGD or Dungs MultiBloc MBE)**<br>**Minimum gas pressure = see gas curves.** |
| **Note3:** | **Burners are suitable only for indoor operation with a maximum relative humidity of 80 %** |

**(*) NOTE ON THE WORKING SERVICE: the control box automatically stops after 24h of continuous working. The control box immediately starts up, automatically.**

## *Country and usefulness gas categories*

| GAS CATEGORY | COUNTRY | | | | | | | | | | | | | | | | | | | | | | | | |
|---|---|---|---|---|---|---|---|---|---|---|---|---|---|---|---|---|---|---|---|---|---|---|---|---|---|
| $I_{2H}$ | AT | ES | GR | SE | FI | IE | HU | IS | NO | CZ | DK | GB | IT | PT | CY | EE | LV | SI | MT | SK | BG | LT | RO | TR | CH |
| $I_{2E}$ | LU | PL | - | - | - | - | - | - | - | - | - | - | - | - | - | - | - | - | - | - | - | - | - | - | - |
| $I_{2E(R)B}$ | BE | - | - | - | - | - | - | - | - | - | - | - | - | - | - | - | - | - | - | - | - | - | - | - | - |
| (*) $I_{2EK}$ | NL | - | - | - | - | - | - | - | - | - | - | - | - | - | - | - | - | - | - | - | - | - | - | - | - |
| $I_{2ELL}$ | DE | - | - | - | - | - | - | - | - | - | - | - | - | - | - | - | - | - | - | - | - | - | - | - | - |
| $I_{2Er}$ | FR | - | - | - | - | - | - | - | - | - | - | - | - | - | - | - | - | - | - | - | - | - | - | - | - |

**(*) Only for $I_{2EK}$** : the appliance was configured for the appliance category K (I2K) and is suitable for the use of G and G+ distribution gases according to the specifications as included in the NTA 8837:2012 Annex D with a Wobbe index of 43.46 – 45.3 MJ/m3 (dry, 0 °C, upper value) or 41.23 – 42.98 (dry, 15 °C, upper value). This appliance can moreover be converted and/or be calibrated for the appliance category E (I2E). This therefore implies that the appliance "is suitable for G+ gas and H gas or is demonstrably suitable for G+ gas and can demonstrably be made suitable for H gas" within the meaning of the "Dutch Decree of 10 May 2016 regarding amendment of the Dutch Gas Appliances Decree and the Dutch Commodities (Administrative Fines) Act in connection with the changing composition of gas in the Netherlands as well as technical amendment of some other decrees.

## *Overall dimensions (mm) - C83X*

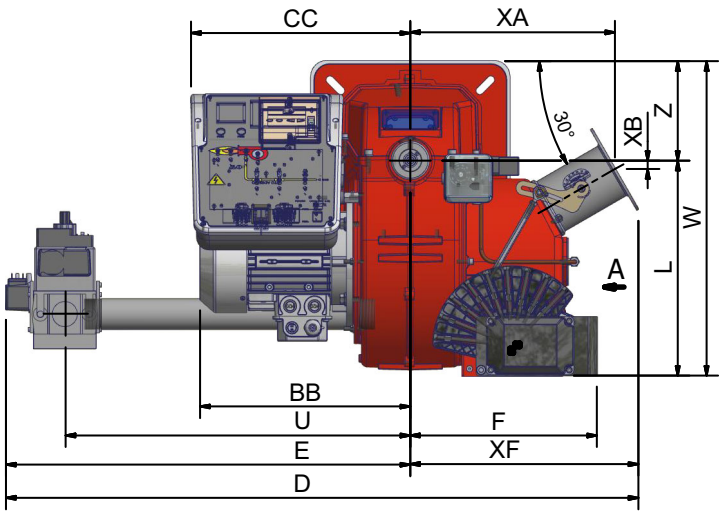


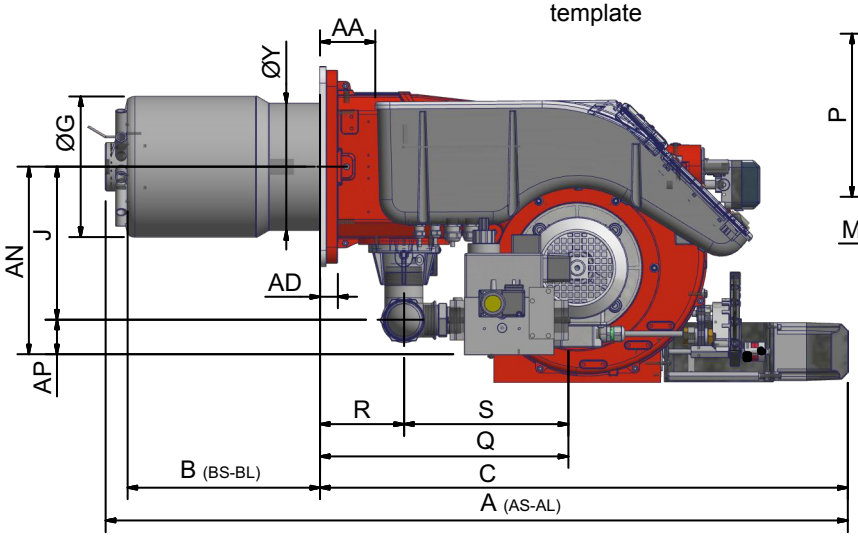


boiler recommended drilling template

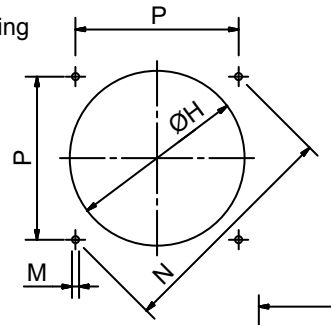


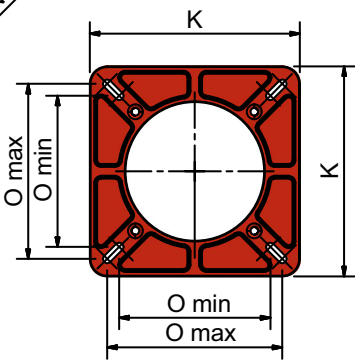


burner flange

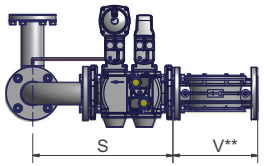


(**) According to the gas train size and the burner type, MB-DLE or VGD valves are supplied. The "V" measure, refers to the gas filter, for burners provided with Siemens VGD valves. MB-DLE valves have a built-in filter.

FGR Flange

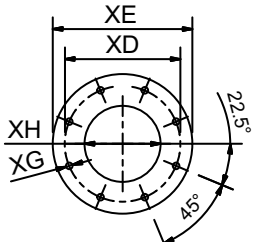


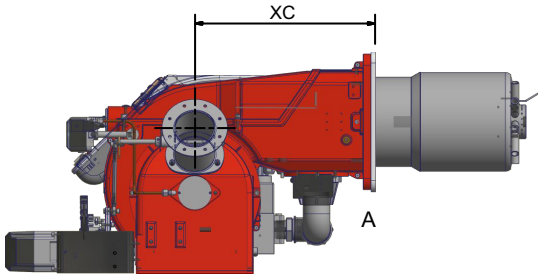


| TIPO | DN | A (AS) | A (AL) | AA | AD | AN | AP | B (BS) | B (BL) | BB | C | CC | D | E | F | G | H | I | J | K | L | M | N | O min | O max | P | Q | R | S | U | V | W | Y | Z | XA | XB | XC | XD | XE | XF | XG | XH |
|---|---|---|---|---|---|---|---|---|---|---|---|---|---|---|---|---|---|---|---|---|---|---|---|---|---|---|---|---|---|---|---|---|---|---|---|---|---|---|---|---|---|---|
| C83X | 1,32 | 1162 | 1312 | 87 | 28 | 292 | 54 | 300 | 450 | 328 | 801 | 342 | 987 | 632 | 327 | 219 | 249 | 210 | 238 | 300 | 335 | M10 | 330 | 216 | 250 | 233 | 387 | 131 | 256 | 541 | x | 490 | 210 | 155 | 319 | 13 | 401 | 120 | 145 | 355 | 7 | 79 |
| | 1.40 | 1162 | 1312 | 87 | 28 | 317 | 79 | 300 | 450 | 328 | 801 | 342 | 987 | 632 | 327 | 219 | 249 | 210 | 238 | 300 | 335 | M10 | 330 | 216 | 250 | 233 | 458 | 131 | 327 | 541 | x | 490 | 210 | 155 | 319 | 13 | 401 | 120 | 145 | 355 | 7 | 79 |
| | 1.50 | 1162 | 1312 | 87 | 28 | 317 | 79 | 300 | 450 | 328 | 801 | 342 | 975 | 620 | 327 | 219 | 249 | 210 | 238 | 300 | 335 | M10 | 330 | 216 | 250 | 233 | 474 | 131 | 343 | 526 | x | 490 | 210 | 155 | 319 | 13 | 401 | 120 | 145 | 355 | 7 | 79 |
| | 1.65 | 1162 | 1312 | 87 | 28 | 236 | 118 | 300 | 450 | 328 | 801 | 342 | 1074 | 719 | 327 | 219 | 249 | 210 | 118 | 300 | 335 | M10 | 330 | 216 | 250 | 233 | 563 | 131 | 432 | 593 | 292 | 490 | 210 | 155 | 319 | 13 | 401 | 120 | 145 | 355 | 7 | 79 |

BS = standard blast tube  BL = long blast tube  DN = gas valves size

B*: SPECIAL blast tube lengths must be agreed with **Cib Unigas**

## *How to read the burner "Performance curve"*

To check if the burner is suitable for the boiler to which it must be installed, the following parameters are needed:

- furnace input, in kW or kcal/h (kW = kcal/h / 860);
- backpressure (data are available on the boiler ID plate or in the user's manual).

Example:

Furnace input: 600kW

Backpressure: 4mbar

In the "Performance curve" diagram, draw a vertical line matching the furnace input value and an horizontal line matching the backpressure value. The burner is suitable if the intersection point A is inside the performance curve.

Data are referred to standard conditions: atmospheric pressure at 1013mbar, ambient temperature at 15°C.

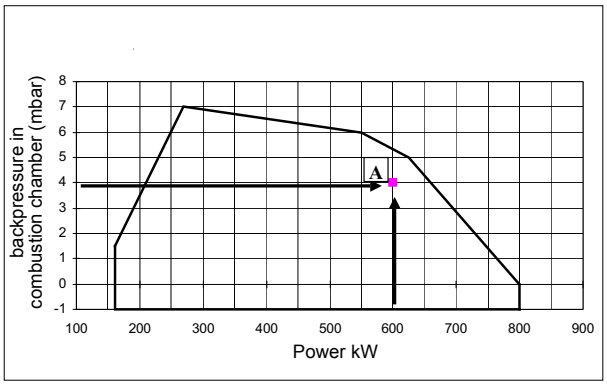


## *Performance Curves*

**C83X M-**

**Burner de-powering based on the boiler thermal load**

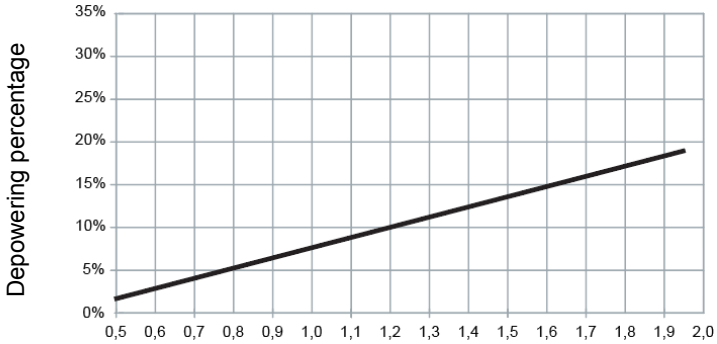


Thermal load [MW/m$^3$]

To get the input in kcal/h, multiply value in kW by 860.

Data are referred to standard conditions: atmospheric pressure at 1013mbar, ambient temperature at 15° C

**NOTE:** The performance curve is a diagram that represents the burner performance in the type approval phase or in the laboratory tests, but does not represent the regulation range of the machine. On this diagram the maximum output point is usually reached by adjsuting the combustion head to its "MAX" position (see paragraph "Adjusting the combustion head"); the minimum output point is reached setting the combustion head to its "MIN" position. During the first ignition, the combustion head is set in order to find a compromise between the burner output and the generator specifications, that is why the minimum output may be different from the Performance curve minimum

## Checking the proper gas train size

To check the proper gas train size, it is necessary to the available gas pressure value upstream the burner's gas valve. Then subtract the backpressure. The result is called **pgas.** Draw a vertical line matching the furnace input value (600kW, in the example), quoted on the x-axis, as far as intercepitng the network pressure curve, according to the installed gas train (DN65, in the example). From the interception point, draw an horizontal line as far as matching, on the y-axis, the value of pressure necessary to get the requested furnace input. This value must be lower or equal to the **pgas** value, calculated before.

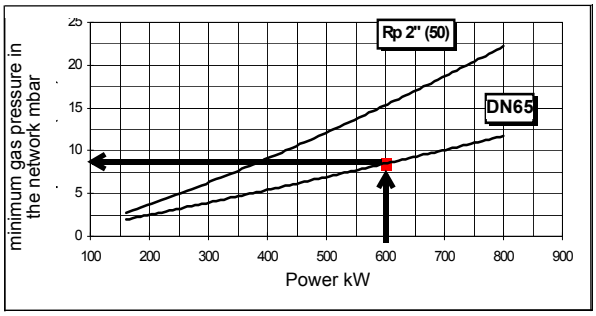


## Pressure in the Network / gas flow rate curves

- ***Natural Gas burners***

**C83X M-..**

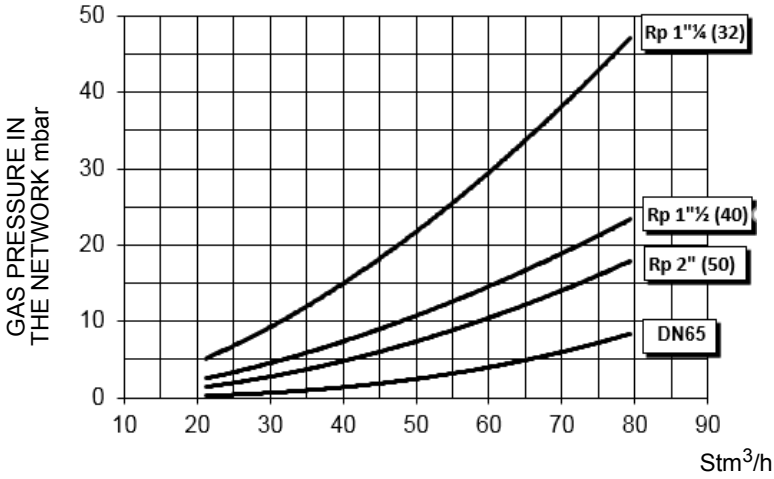


***ATTENTION: the gas rate value is quoted on the x-axis, the related network pressure is quoted on the y-axis (pressure value in the combustion chamber is not included). To know the minimum pressure at the gas train inlet, necessary to get the requested gas rate, add the pressure value in the combustion chamber to the value read on the y-axis.***

## Combustion head gas pressure curves

Combustion head gas pressure depends on gas flow and combustion chamber backpressure. When backpressure is subtracted, i depends only on gas flow, provided combustion is properly adjusted, flue gases residual O2 percentage complies with “Recommendec combustion values” table and CO in the standard limits). During this stage, the combustion head, the gas butterfly valve and the actuator are at the maximum opening. Refer to , showing the correct way to measure the gas pressure, considering the values o pressure in combustion chamber, surveyed by means of the pressure gauge or taken from the boiler’s Technical specifications.
.

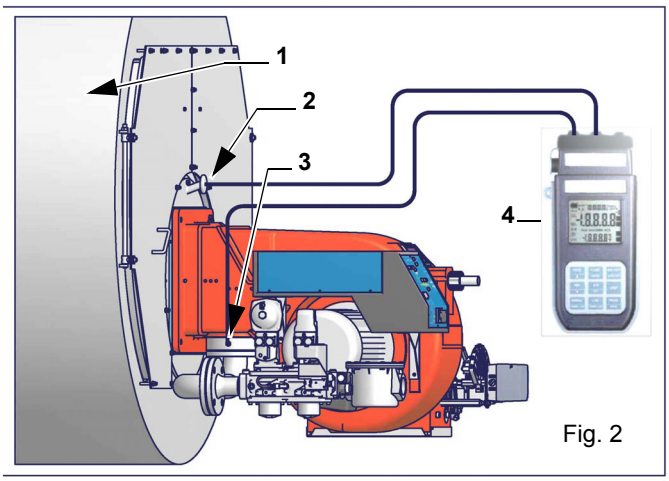

Fig. 2

Note: the figure is indicative only.
Key
1 Generator
2 Pressure outlet on the combustion chamber
3 Gas pressure outlet on the butterfly valve
4 Differential pressure gauge

***ATTENTION: THE BURNED GAS RATE MUST BE READ AT THE GAS FLOW METER. WHEN IT IS NOT POSSIBLE, THE USER CAN REFERS TO THE PRESSURE-RATE CURVES AS GENERAL INFORMATION ONLY.***

## Measuring gas pressure in the combustion head

In order to measure the pressure in the combustion head, insert the pressure gauge probes: one into the combustion chamber’s pressure outlet to get the pressure in the combustion chamber and the other one into the butterfly valve’s pressure outlet of the burner. On the basis of the measured differential pressure, it is possible to get the maximum flow rate: in the pressure - rate curves (showed on the next paragraph), it is easy to find out the burner’s output in $Stm^3/h$ (quoted on the x axis) from the pressure measured in the combustion head (quoted on the y axis). The data obtained must be considered when adjusting the gas flow rate.

## Pressure - rate in combustion head curves (natural gas)

***Curves are referred to pressure = 0 mbar in the combustion chamber!***

### Performance Curves

**C83X M-**

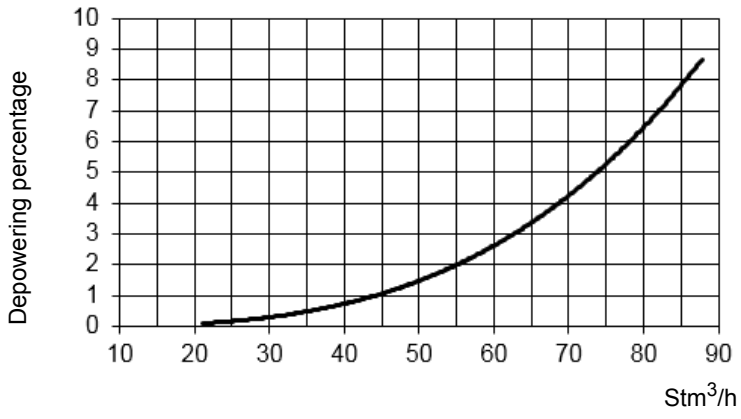


To get the input in kcal/h, multiply value in kW by 860.

Data are referred to standard conditions: atmospheric pressure at 1013mbar, ambient temperature at 15° C

**NOTE:** The performance curve is a diagram that represents the burner performance in the type approval phase or in the laboratory tests, but does not represent the regulation range of the machine. On this diagram the maximum output point is usually reached by adjsuting the combustion head to its “MAX” position (see paragraph “Adjusting the combustion head”); the minimum output point is reached setting the combustion head to its “MIN” position. During the first ignition, the combustion head is set in order to find a compromise between the burner output and the generator specifications, that is why the minimum output may be different from the Performance curve minimum

**PART II: INSTALLATION**

# MOUNTING AND CONNECTING THE BURNER

## *Transport and storage*

***ATTENTION! The equipment must be installed in compliance with the regulations in force, following the manufacturer's instructions, by qualified personnel. All handling operations must be carried out with appropriate resources and qualified personnel***

***ATTENTION: Use intact and correctly dimensioned hoisting equipment, conforms to the local regulations and health and safety regulations. Do not stand under lifted loads.***

If the product must be stored, avoid humid and corrosive places. Observe the temperatures stated in the burner data table at the beginning of this manual. The packages containing the burners must be locked inside the means of transport in such a way as to guarantee the absence of dangerous movements and avoid any possible damage.

In case of storage, the burners must be stored inside their packaging, in storerooms protected from the weather. Avoid humid or corrosive places and respect the temperatures indicated in the burner data table at the beginning of this manual.

## *Packing*

The burners are despatched in wooden crates whose dimensions are:

- 1636mm x 1036mm x 1016mm (L x P x H).

Packing cases of this type are affected by humidity and are not suitable for stacking.

The following are placed in each packing case:

- burner with detached gas train;
- gasket or ceramic fibre plait (according to burner type) to be inserted between the burner and the boiler;
- envelope containing this manual and other documents.

To get rid of the burner's packing, follow the procedures laid down by current laws on disposal of materials.

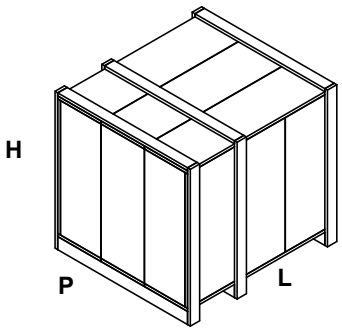


## *Handling the burner*

***WARNING! The handling operations must be carried out by specialised and trained personnel. If these operations are not carried out correctly, the residual risk for the burner to overturn and fall down still persists.***

The burner is provided with eyebolts, for handling operations and it can be lifted with a hydraulic lift or a small manual crane. (A)

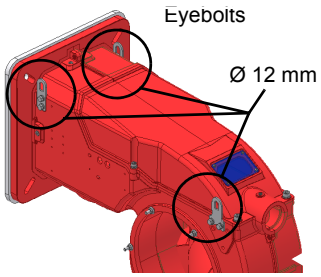


The burner is designed to work positioned according to the picture below. For different installations, please contact the Technical Department.

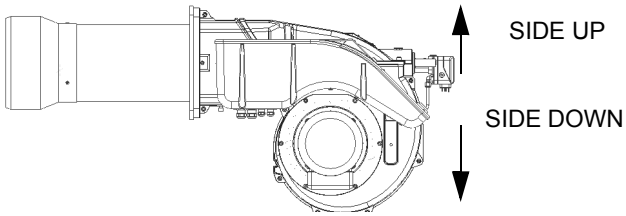


Note: the figure is indicative only.

## *Fitting the burner to the boiler*

To install the burner into the boiler, proceed as follows:

1 make a hole on the closing door of the combustion chamber as described on paragraph “Overall dimensions”)
2 place the burner to the boiler: lift it up and handle it according to the procedure described on paragraph “Handling the burner”;
3 place the 4 stud bolts (5) on boiler’s door, according to the burner drilling template described on paragraph “Overall dimensions”;
4 fasten the 4 stud bolts;
5 place the gasket on the burner flange;
6 install the burner into the boiler;
7 fix the burner to the stud bolts, by means of the fixing nuts, according to the next picture.
8 After fitting the burner to the boiler, ensure that the gap between the blast tube and the refractory lining is sealed with appropriate insulating material (ceramic fibre cord or refractory cement).

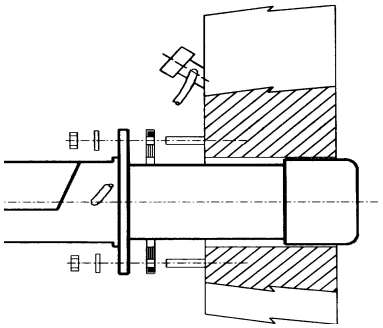

**Keys**

1 Burner
2 Fixing nut
3 Washer
4 Sealing gasket
5 Stud bolt
7 Blast tube

## *Matching the burner to the boiler (low NOx burners)*

The burners described in this manual have been tested with combustion chambers that comply with EN676 regulation and whose dimensions are described in the diagram . In case the burner must be coupled with boilers with a combustion chamber smaller in diameter or shorter than those described in the diagram, please contact the supplier, to verify that a correct matching is possible, with respect of the application involved. To correctly match the burner to the boiler verify the type of the blast tube . Verify the necessary input and the pressure in combustion chamber are included in the burner performance curve; otherwise the choice of the burner must be revised consulting the burner manufacturer. To choose the blast tube lenght consider the following rule, even if it differs from the instructions of the boiler manufacturer: Cast-iron boilers, three pass flue boilers (with the first pass in the rear part): the blast tube must protrude at least 150÷200 mm into the combustion chamber.The length of the blast tubes does not always allow this requirement to be met, and thus it may be necessary to use a suitably-sized spacer to move the burner backwards.

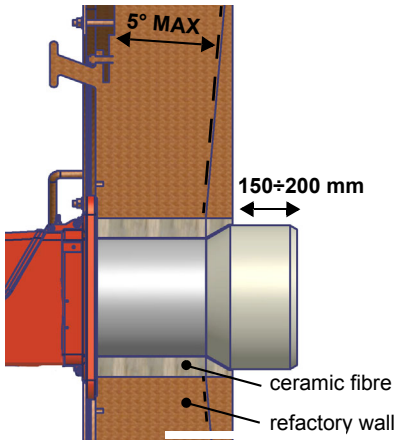


Fig. 1

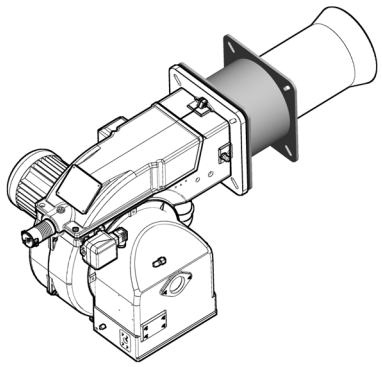

Fig. 2

***WARNING! Carefully seal the free space between blast tube and the refractory lining with ceramic fibre rope or other suitable means.***

## *Sizing of the FGR pipe (FGR burners only)*

***ATTENTION! Performance curve is obtained in a plant designed according to the following guidelines, size the FGR pipe as per the example below.***

""

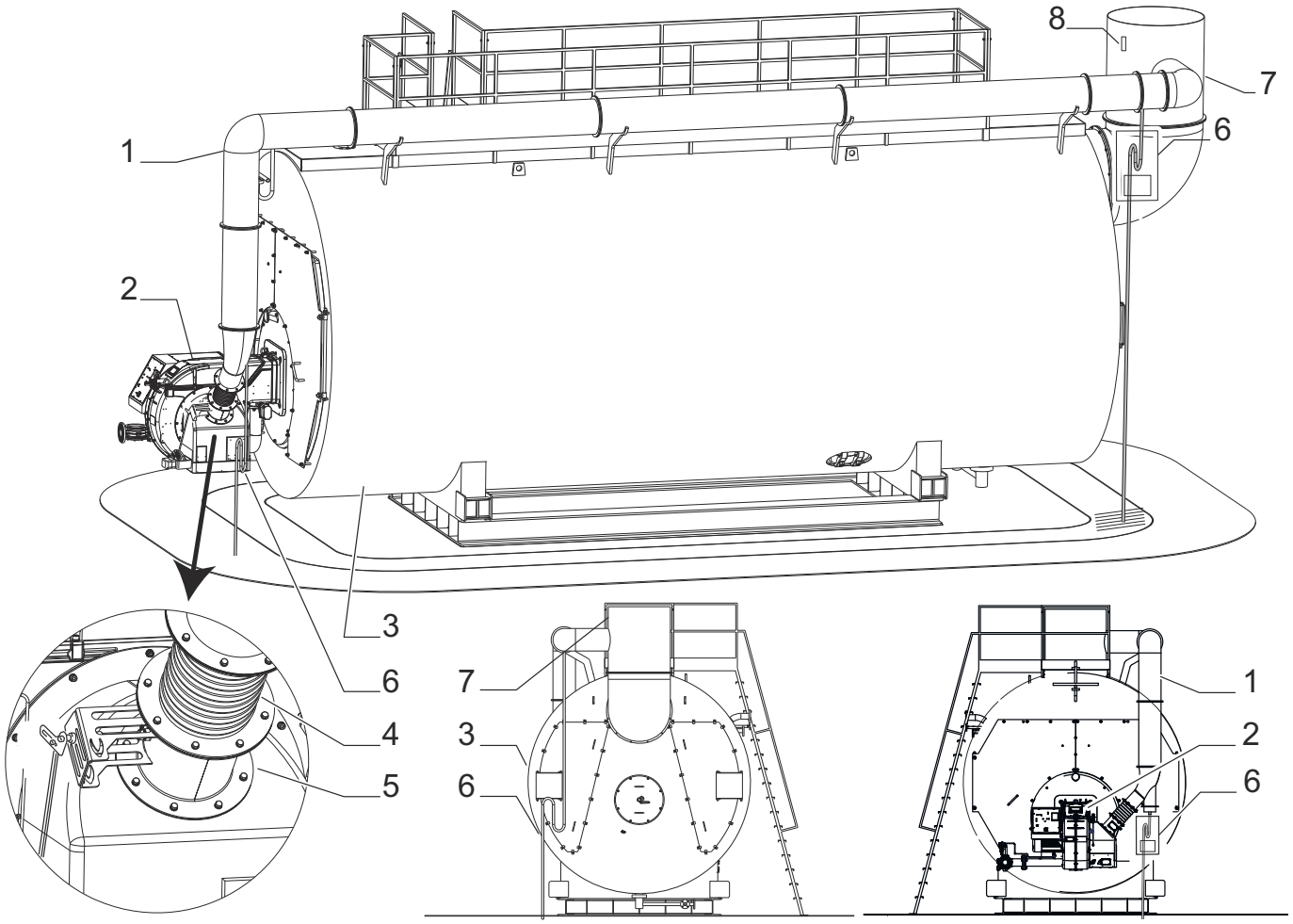


Keys
1 Stainless steel FGR pipe, insulated
2 Burner
3 Boiler
4 Bellow unit (a counter-flange supplied loose is to be welded to the FGR duct)
5 FGR butterfly valve
6 Siphon and condensate drainage
7 Stack
8 **PT1000** Flue gas temperature probe

The temperature probe for flue gas temperature compensation must be installed on the chimney.
The internal diameter of the FGR conduit must be dimensioned considering a maximum speed of 10 m / s. Assume a volumetric flow rate of recirculatig fluegases for the dimensioning equal to 20% of the comburent air flow.

***ATTENTION! Pipe elbows increase pressure losses, so limit their use as much as possible.***

**Example:**

Let's say 4.816 kW is the maximum burner output:
required combustion air flow will then be 5.800 $Stm^3/h$ = 1,61 $Stm^3/s$ in standard conditions (15 °C; 1.013 mbar).

| | |
|---|---|
| Flue gas temperature: | 150 °C or 150 + 273,15 = 423,15 K |
| Ambient temperature: | 15 °C or 15 + 273,15 = 288,15 K |
| FGR flow for dimensioning: | 1,61 x 20% = 0,322 Stm3 / s |
| FGR flow corrected for flue gas temperature: | 0,322 x 423,15 / 288,15 = 0,473 m3 / s @ (t = 150 °C) |
| FGR pipe section: | 0,473 m3/s / 10 m/s = 0,0473 m2 |

So in this example, pipe internal diameter must be larger than 245 mm to ensure proper FGR flow.

* FGR = Flue gas recirculation system

## GAS TRAIN CONNECTIONS

The diagrams show the components of the gas train included in the delivery and which must be fitted by the installer.The diagrams are in compliance with the current laws.

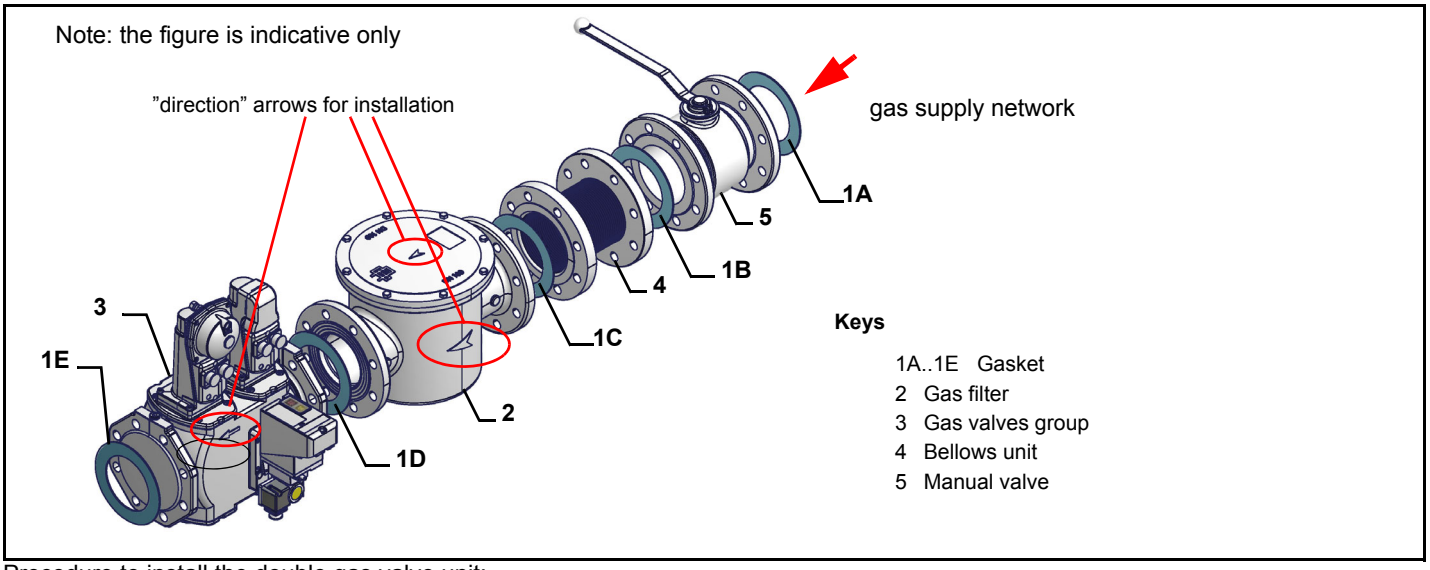


Procedure to install the double gas valve unit:

- **two (2) gas flanges are required; they may be threaded or flanged depending on size**
- **first step: install the flanges to prevent entry of foreign bodies in the gas line**
- **on the gas pipe, clean the already assembled parts and then install the valve unit**
- **check gas flow direction: it must follow the arrow on the valve body**
- **VGD20: make sure the O-rings are correctly positioned between the flanges and the valve**
- **VGD40 and MBE: make sure the gaskets are correctly positioned between the flange**
- **fasten all the components with screws, according to the following diagrams**
- **make sure bolts on the flanges are properly tightened**

***WARNING: before executing the connections to the gas pipe network, be sure that the manual cutoff valves are closed.***

***ATTENTION: it is recommended to mount filter and gas valves to avoid that extraneous material drops inside the valves, during maintenance and cleaning operation of the filters (both the filters outside the valves group and the ones built-in the gas valves).***

***ATTENTION: once the gas train is mounted, the gas proving test must be performed, according to the procedure set by laws in force.***

To mount the gas train, proceed as follows:

-

1 In case of threaded joints: use proper seals according to the gas used- in case of flanged joints: place a gasket between the elements

2 Fasten all the items by means of screws, according to the diagrams showed, observing the mounting direction for each item

**NOTE:** the bellows unit, the manual cutoff valve and the gaskets are not part of the standard supply

Gas train with valves group MB-DLE (2 valves + gas filter + pressure governor)

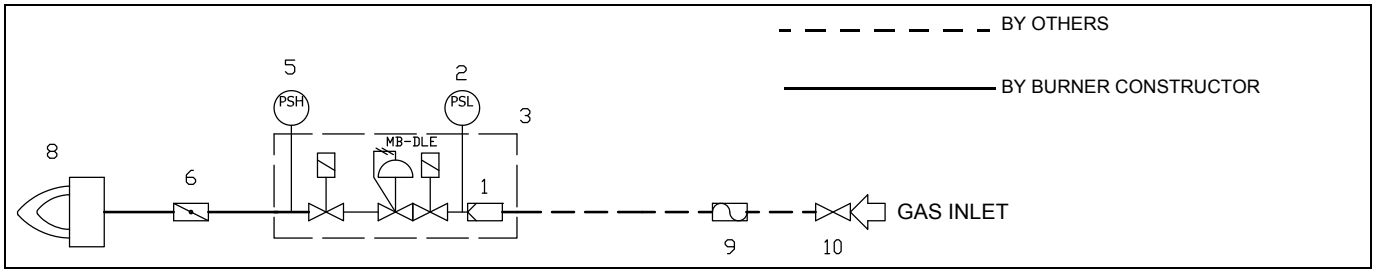


Gas train with valves group VGD with built-in gas pressure governor

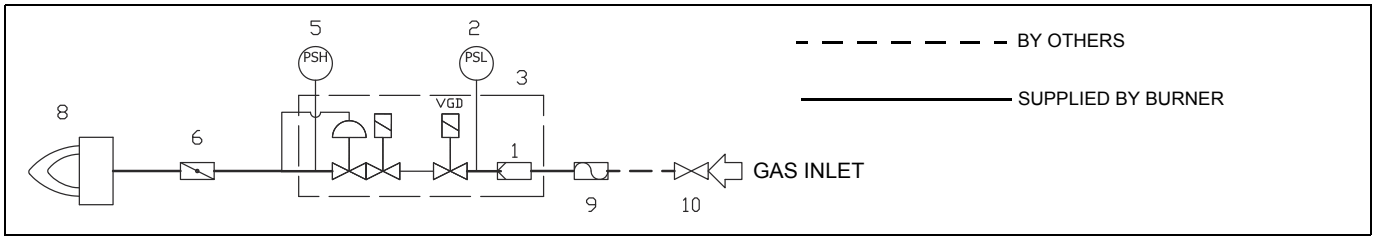


**Legend**

| | | | |
|---|---|---|---|
| 1 | Filter | 6 | Butterfly valve |
| 2 | Pressure switch - PGMIN | 7 | Pressure transducer |
| 3 | Safety valve with built in gas governor | 8 | Main burner |
| 4 | Proving system pressure switch - PGCP | 9 | Antivibration joint (*optional) |
| 5 | Pressure switch PGMAX: mandatory for MBE, optional for VGD and MB-DLE | 10 | Manual valve(*optional) |

# MultiBloc MB-DLE - *Assembling the gas train*

Note: the figure is indicative only

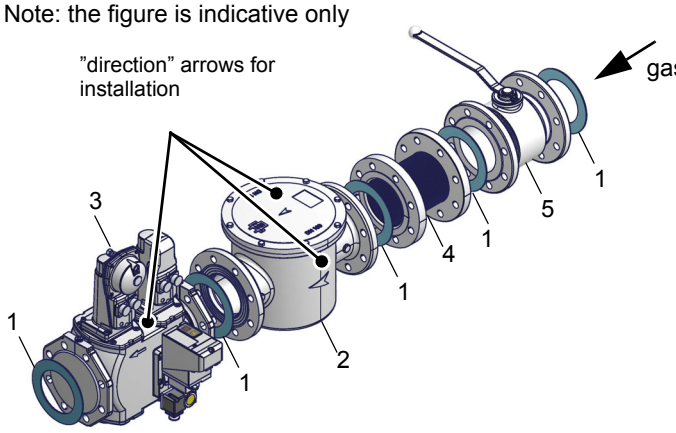


**Keys**

1 Gasket
2 Gas filter
3 Gas valves group
4 Bellows unit
5 Manual valve

***MULTIBLOC DUNGS*** **Mounting**

***MB-DLE 405..412***
***MB-DLE 415..420***

1 Mount flange onto tube lines: use appropriate sealing agent
2 Insert MB-DLE: note position of O rings
3 Remove MultiBloc between the threaded flanges
4 After installation, perform leakage and functional test
5 Disassembly in reverse order

***MB-DLE 405..412***

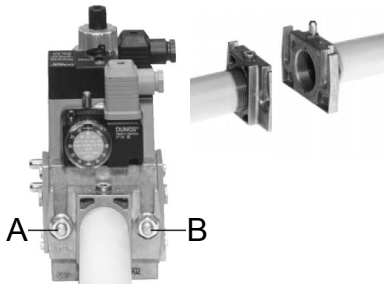


***MB-DLE 415..420***

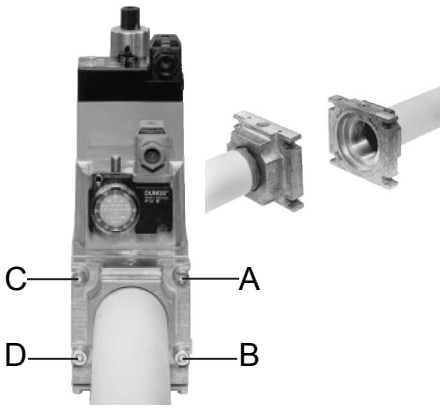


MOUNTING POSITIONS

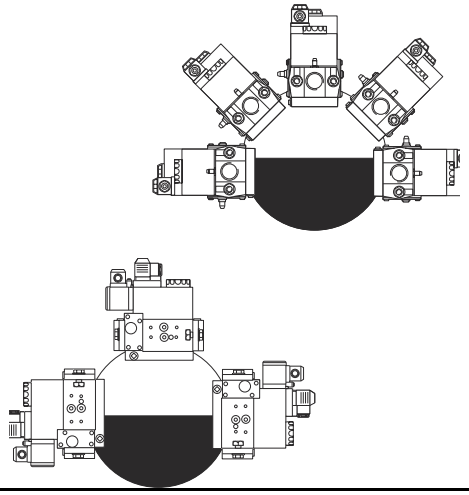

## MultiBloc MBE

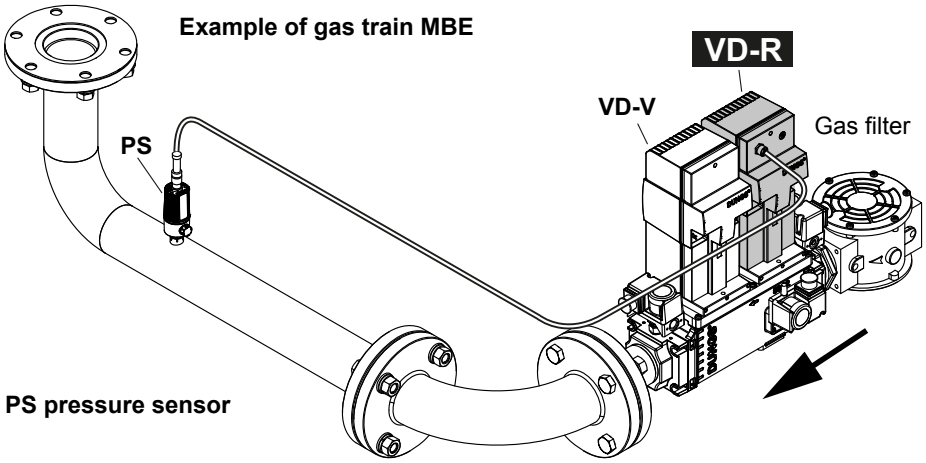


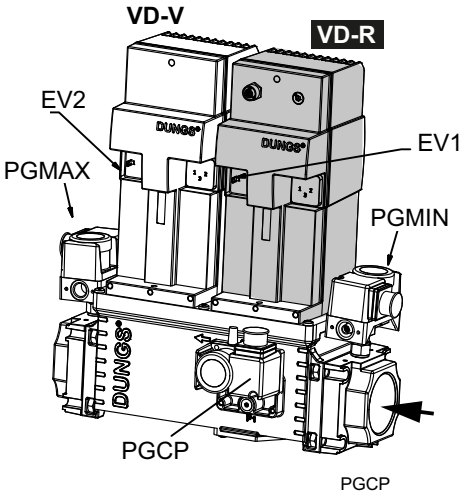


***ATTENTION: once the gas train is mounted according, the gas proving test mus be performed, according to the procedure set by the laws in force.***

***ATTENTION: it is recommended to mount filter and gas valves to avoid that extraneous material drops inside the valves, during maintenance and cleaning operation of the filters (both the filters outside the valves group and the ones built-in the gas valves).***

***WARNING: Slowly open the fuel cock to avoid breaking the pressure regulator.***

## Threaded train with MultiBloc MBE - Mounting

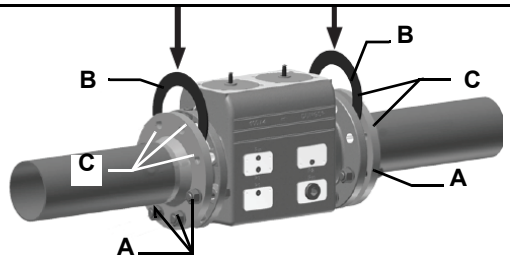


1. Insert studs A.
2. Insert seals B.
3. Insert studs C.
4. Tighten studs in accordance with section 8.

**Ensure correct position of the seal!**

5. Perform leak and functional tests after mounting.
6. Screws (4xM5x20) for VD assembly are supplied.

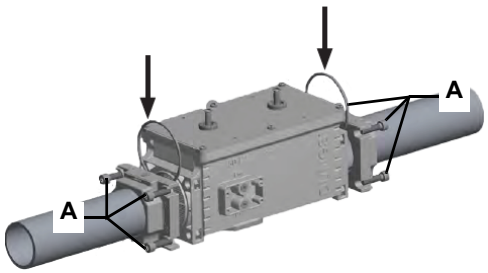


1. Mount flange into pipe systems. Use appropriate sealing agent.
2. Insert VB together with supplied O-rings.
Check current position of O-rings.
3. Tighten supplied screws (8xM8x30) in accordance with section 8.
4. Screws (4xM5x25) for VD assembly are supplied.
5. After installation, perform leakage and functional test.
6. Disassembly in reverse order.

## Mounting position MBE / VB / VD

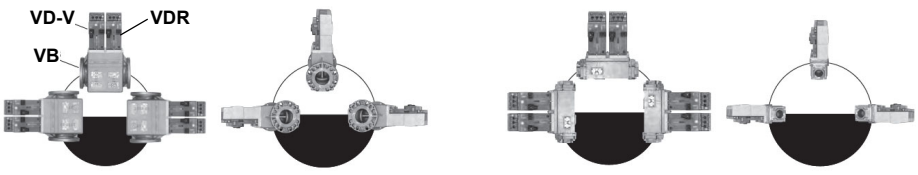

### *Mounting VD-R & PS-...*

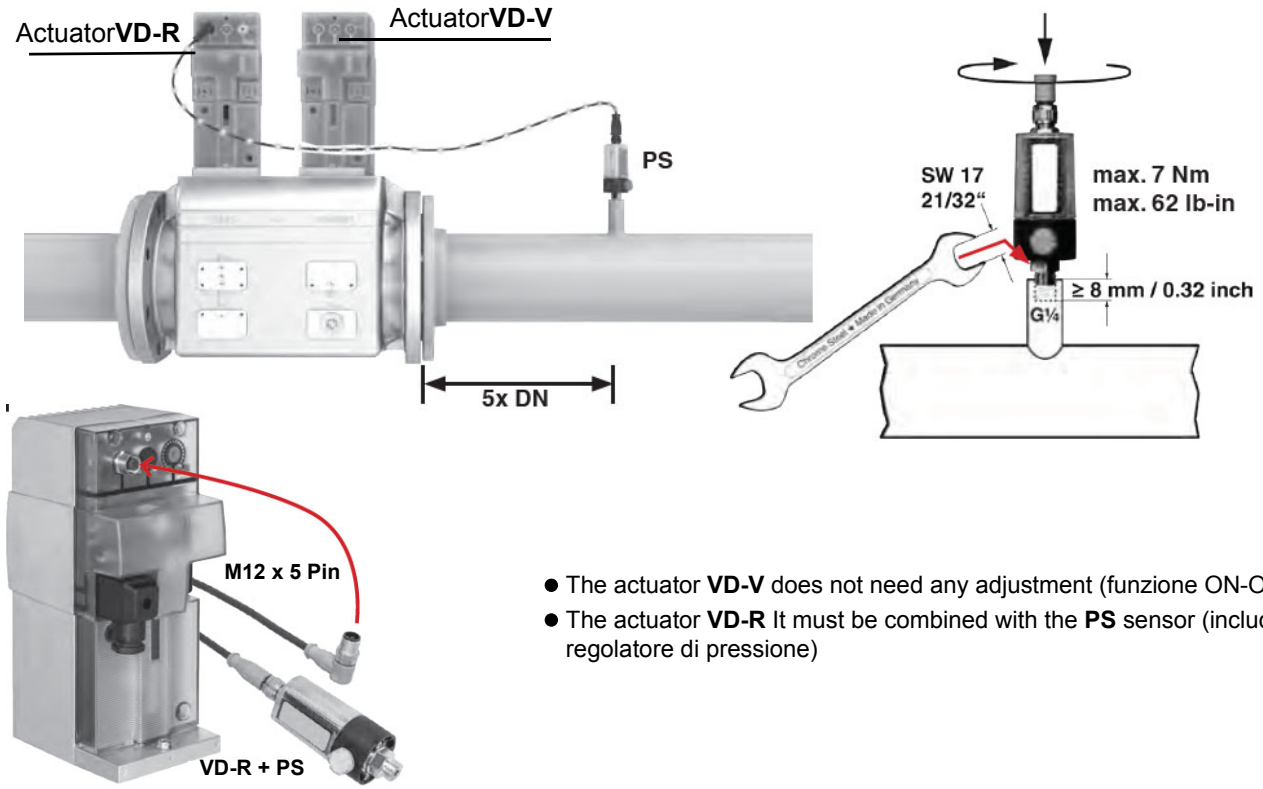


- The actuator **VD-V** does not need any adjustment (funzione ON-OFF)
- The actuator **VD-R** It must be combined with the **PS** sensor (include regolatore di pressione)

1. Gas pressure regulation is possible with VD-R and PS pressure sensor only.
**WARNING! For US/CN installation, the output pressure must be monitoried by min. and max. pressure switches set to +/- 20% of the setpoint.**
2. Mounting on pipe. Sensor position: 5x DN according to MBE. Pipe fitting with female thread size ¼, mount sensor with seal, observe torque.
3. The pressure sensor includes a vent limiter according to UL 353 and ANSI Z21.18/CSA 6.3. No venting required in locations where vent limiters are accepted by the jurisdiction.
4. Only PS pressure sensors specified by DUNGS are authorised to be connected to the VD-R‘s M12 interface.
5. Only PS cables specified by DUNGS are authorised to be used to connect the PS to the VD-R. Max. cable length 3 m.

## *Siemens VGD20.. e VGD40..*

**Siemens VGD20.. and VGD40.. gas valves - with SKP2.. (pressure governor)**

- Connect the reference gas pipe (**TP** in figure; 8mm-external size pipe supplied loose), to the gas pressure nipples placed on the gas pipe, downstream the gas valves: gas pressure must be measured at a distance that must be at least 5 times the pipe size.
- Leave the blowhole free (**SA** in figure). Should the spring fitted not permit satisfactory regulation, ask one of our service centres for a suitable replacement.

***Caution: the SKP2 diaphragm D must be vertical***

***WARNING: removing the four screws BS causes the device to be unserviceable!***

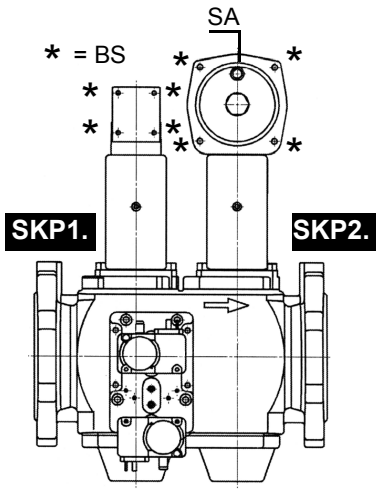


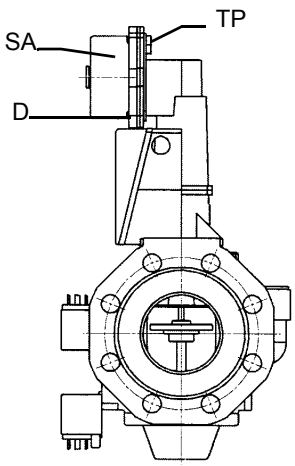


SIEMENS VGD..
Mounting positions

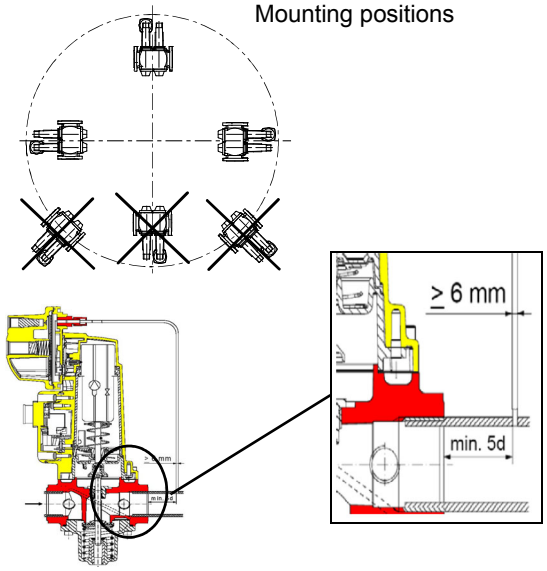


## *version with SKP2 (built-in pressure stabilizer)*

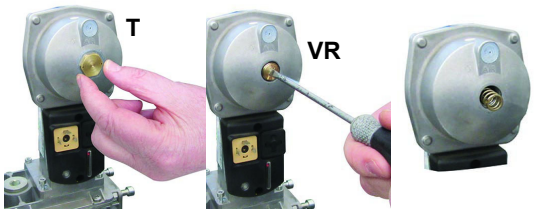


| Performance range (mbar) | | | |
|---|---|---|---|
| | **neutral** | **yellow** | **red** |
| Spring colour SKP 25.0 | 0 ÷ 22 | 15 ÷ 120 | 100 ÷ 250 |
| Spring colour SKP 25.4 | | 7 ÷ 700 | 150 ÷ 1500 |

**Siemens VGD valves with SKP actuator:**

The pressure adjusting range, upstream the gas valves group, changes according to the spring provided with the valve group.

To replace the spring supplied with the valve group, proceed as follows:

- Remove the cap (T)
- Unscrew the adjusting screw (VR) with a screwdriver
- Replace the spring

Stick the adhesive label for spring identification on the type plate.

## *Siemens VGD SKPx5 (Auxiliary-optional micro switch)*

**Actuator connection**

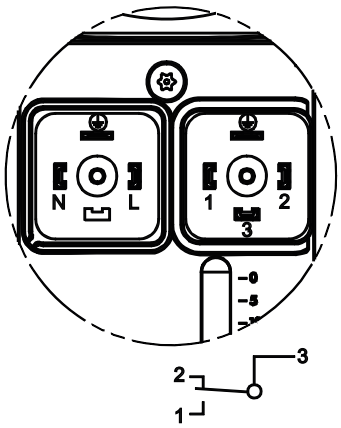


**Valve drive**
Plug connection

**End of stroke**
Plug connection

(only with SKPxx.xx1xx)

A Valve closed

## *Gas valveGas Filter (if provided)*

The gas filters remove the dust particles that are present in the gas, and prevent the elements at risk (e.g.: burner valves, counters and regulators) from becoming rapidly blocked. The filter is normally installed upstream from all the control and on-off devices.

***ATTENTION: it is reccomended to install the filter with gas flow parallel to the floor in order to prevent dust fall on the safety valve during maintenance operation.***

Once the train is installed, connect the gas valves group and pressure switches plugs.

***Integrated proving system (burners equipped with LME7x, LMV, LDU)***

This paragraph describes the integrated proving system operation sequence:

- At the beginning both the valves (EV1 and EV2) must be closed.
- Test space evacuating: EV2 valve (burner side) opens and keep this position for a preset time (td4), in order the bring the test space to ambient pressure.Test atmospheric pressure: EV2 closes and keep this position for a preset time (test time td1). The pressure switch PGCP has not to detect a rise of pressure.
- Test space filling: EV1 opens and keep this position for a preset time (td3), in order to fill the test space.
- Test gas pressure: EV1 closes and keep this position for a preset time (td2). The pressure switch PGCP has not to detect a pressure drop down.

If all of the test phases are passed the proving system test is successful, if not a burner lockout happens.

On LMV5x and LMV2x/3x and LME73 (except LME73.831BC), the valve proving can be parameterized to take place on startup, shutdown, or both.

On LME73.831BC the valve proving is parameterized to take place on startup only.

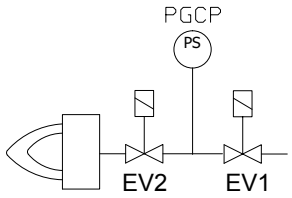


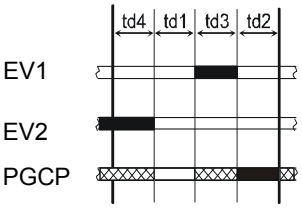

# ELECTRICAL CONNECTIONS

***WARNING: (only for double stage and progressive burners) The burner is provided with an electrical bridge between terminals 6 and 7; when connecting the high/low flame thermostat, remove this bridge before connecting the thermostat.***

***Any cable connection or hook-up to the grid must be carried out by qualified, informed and trained personnel, directly coordinated and authorized by Technical Service. Always check in advance that the system electrical interlock is fitted with a safety circuit breaker.***

***WARNING! It is forbidden to use the fuel pipes for the execution and/or completion of the grounding***

- The system must comply with the current regulations.
- Earth the system; always check in advance the connection, functionality and compliance with the health and safety principles of the earth cable. If in doubt, ask for an accurate inspection by qualified technical engineers.
- Check the connection to the grounding system.
- Do not use any extraneous conductive parts (i.e. fuel feeding pipes, metal structures ...) to connect the burner to ground.
- In connecting the supply wires to the burner MA terminal strip, ensure that the earth wire is longer than the phase and neutral wires.
- Careful not to invert the phase and neutral connections
- Fit the burner power line with an omnipolar disconnector and differential switch, a thermo-magnetic circuit breaker or fuses.
- Supply the burner with a flame retardant cable with a section suitable to the installed power (see electrical diagram enclosed), paying attention to the voltage values printed on the burner plate.
- Always check in advance the protection from overcurrents and electromagnetic interference of the power supply. If these and other values do not match the threshold data stated by the manufacturer, isolate the burner from all power sources and contact the Authorized Technical Service urgently.
- Check that the voltage of the system and burner motors match the voltage of the power grid (+/- 10%).
- Ensure the IP protection rating is consistent with the installation place and environment characteristics
- Before carrying out any operation on the machine electrical panel, open the system omnipolar disconnector and move the switch on the burner panel to OFF.

In any case:

- use suitably protected and safe burner/boiler supply and tracking cables;
- avoid using extensions, adaptors or multiple sockets.

For further information, refer to the electrical diagram.

Follow the electrical diagrams attached to the manual for the connections to the terminal strip.
The electrical panel is supplied complete with a terminal strip for the connection to the system electrical line and, in case of on board control panel, a plug for the connection to the modulation probe (if any).

## *Rotation of electric motor*

Once the electrical connection of the burner is executed, remember to check the rotation of the electrical motor (pump motor if any, and fan motor) . The motor should rotate according to the “arrow” symbol on the body. In the event of wrong rotation, reverse the three-phase supply and check again the rotation of the motor.

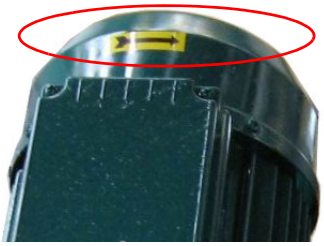

***ATTENTION: check the calibration of the thermal relay sensor (+5% ÷ +10% rated value).***

***DANGER! Incorrect motor rotation can seriously damage property and injure people.***

**NOTE: the burners are supplied for three-phase 380 V or 400 V supply, and in the case of three-phase 220 V or 230 V supply it is necessary to modify the electrical connections into the terminal box of the electric motor and replace the overload tripped relay.**

### *Note on elecrtical supply*

If the power supply to the burner is 230V three-phase or 230V phase-phase (without a neutral), with the Siemens control box, between the terminal 2 (terminal X3-04-4 in case of LMV2x, LMV3x, LMV5x, LME7x) on the board and the earth terminal, an RC Siemens RC466890660 filter must be inserted.

**Key**
C - Capacitor (22nF/250V)
LME / LMV - Siemens control box
R - Resistor (1MΩ)
M - Terminal 2 (LGB,LMC,LME), terminal X3-04-4 ( LMV2x, LMV3x, LMV5, LME7x)
RC466890660 - RC Siemens filter

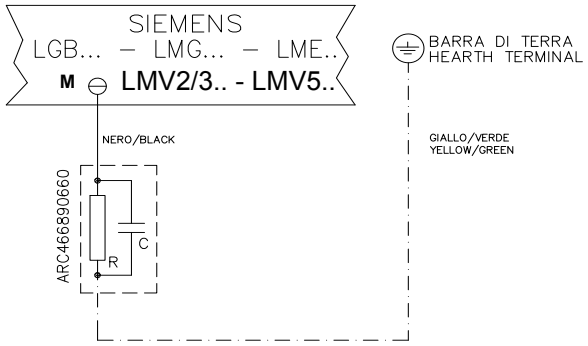


For LMV5 control box, please refer to the clabeling recommendations avaible on the Siemens CD attached to the burner

### *Configuration with separate electrical panel (optional)*

The length of the electrical cables must comply with the provisions in the technical sheets of the equipment or the advice the company gives at the time of the offer/contract.

Provide sufficient protections for cables and connectors, taking into consideration positioning spaces and the panel-burner tracing surfaces. Always consult beforehand the electrical drawings supplied in relationship to the topography of the feeding systems.

## BURNER SAFETY

The burners - and the configurations described below - comply with the regulations in force regarding health, safety and the environment. For more in-depth information, refer to the declarations of conformity that are an integral part of this Manual.

***DANGER! The safety elements and devices have been realized to protect from risks deriving from expected use, adjustment and maintenance. Tampering with them, even minimally, and therefore creating dangerous situations for people, property and the surrounding environment, is strictly forbidden.***

### *Residual risks deriving from misuse and prohibitions*

The burner has been built in order to make its operation safe; there are, however, residual risks.

***Do not touch any mechanical moving parts with your hands or any other part of your body. Injury hazard***
***Do not touch any parts containing fuel (i.e. tank and pipes). Scalding hazard***
***Do not use the burner in situations other than the ones provided for in the data plate.***
***Do not use fuels other than the ones stated.***
***Do not use the burner in potentially explosive environments.***
***Do not remove or by-pass any machine safety devices.***
***Do not remove any protection devices or open the burner or any other component while the burner is running.***
***Do not disconnect any part of the burner or its components while the burner is running.***
***Untrained staff must not modify any linkages.***

***After any maintenance, it is important to restore the protection devices before restarting the machine.***
***All safety devices must be kept in perfect working order.***
***Personnel authorized to maintain the machine must always be provided with suitable protections.***

***ATTENTION: while running, the parts of the burner near the generator (coupling flange) are subject to overheating. Where necessary, avoid any contact risks by wearing suitable PPE.***

# PART III: OPERATION

***DANGER! Incorrect motor rotation can seriously damage property and injure people.WARNING: before starting the burner up, be sure that the manual cutoff valves are open and check that the pressure upstream the gas train complies the value quoted on paragraph "Technical specifications". Be sure that the mains switch is closed.***

***DANGER: During commissioning operations, do not let the burner operate with insufficient air flow (danger of formation of carbon monoxide); if this should happen, make the gas decrease slowly until the normal combustion values are achieved.WARNING: never loose the sealed screws! otherwise, the device warranty will be immediately invalidate!***

**LIMITATIONS OF USE**

**THE BURNER IS AN APPLIANCE DESIGNED AND CONSTRUCTED TO OPERATE ONLY AFTER BEING CORRECTLY CONNECTED TO A HEAT GENERATOR (E.G. BOILER, HOT AIR GENERATOR, FURNACE, ETC.), ANY OTHER USE IS TO BE CONSIDERED IMPROPER AND THEREFORE DANGEROUS.**

**THE USER MUST GUARANTEE THE CORRECT FITTING OF THE APPLIANCE, ENTRUSTING THE INSTALLATION OF IT TO QUALIFIED PERSONNEL AND HAVING THE FIRST COMMISSIONING OF IT CARRIED OUT BY A SERVICE CENTRE AUTHORISED BY THE COMPANY MANUFACTURING THE BURNER.**

**A FUNDAMENTAL FACTOR IN THIS RESPECT IS THE ELECTRICAL CONNECTION TO THE GENERATOR'S CONTROL AND SAFETY UNITS (CONTROL THERMOSTAT, SAFETY, ETC.) WHICH GUARANTEES CORRECT AND SAFE FUNCTIONING OF THE BURNER.**

**THEREFORE, ANY OPERATION OF THE APPLIANCE MUST BE PREVENTED WHICH DEPARTS FROM THE INSTALLATION OPERATIONS OR WHICH HAPPENS AFTER TOTAL OR PARTIAL TAMPERING WITH THESE (E.G. DISCONNECTION, EVEN PARTIAL, OF THE ELECTRICAL LEADS, OPENING THE GENERATOR DOOR, DISMANTLING OF PART OF THE BURNER).**

**NEVER OPEN OR DISMANTLE ANY COMPONENT OF THE MACHINE EXCEPT FOR ITS MAINTENANCE.**

**TO SECURE THE MACHINE, ACT ON THE ISOLATOR SWITCH. IN CASE OF ANOMALIES THAT REQUIRED A SHUT DOWN OF THE BURNER, IT'S POSSIBLE TO ACT ON THE AUXILIARY LINE SWITCH, LOCATED ON THE BURNER FRONT PANEL.**

**IN CASE OF A BURNER SHUT-DOWN, RESET THE CONTROL BOX BY MEANS OF THE RESET PUSHBUTTON. IF A SECOND SHUT-DOWN TAKES PLACE, CALL THE TECHNICAL SERVICE, WITHOUT TRYING TO RESET FURTHER.**

**WARNING: DURING NORMAL OPERATION THE PARTS OF THE BURNER NEAREST TO THE GENERATOR (COUPLING FLANGE) CAN BECOME VERY HOT, AVOID TOUCHING THEM SO AS NOT TO GET BURNT.**

Fig. 3 - Burner front panel

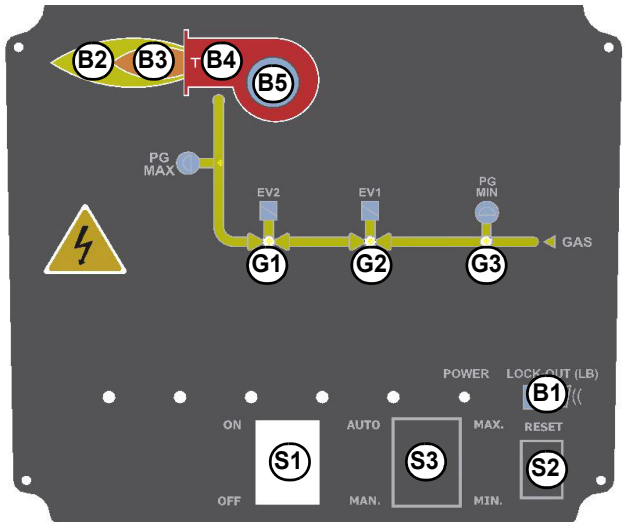


**Keys**

| | |
|---|---|
| B1 | Lock-out LED |
| B2 | Hi-flame operation LED |
| B3 | Lo-flame operation LED |
| B4 | “Ignition transformer operation” LED |
| B5 | “Fan motor overload tripped” LED |
| G1 | “EV2 opening” LED |
| G2 | “EV1 opening” LED |
| G3 | “Gas pressure switch signal ” LED |
| S1 | Main switch |
| S2 | Reset pushbutton for control box |
| S3 | Operation selector MAN - AUTO (operation in manual or automatic mode):<br>MIN = operation with minimum output<br>MAX = operation at the maximum output |
| A1 | Burner Modulator (only on fully modulating burners) |
| A2 | AZL.. |

Abb. 1

### *Gas operation*

- Check that the control box is not in the lockout position; in case unlock it by pressing the relevant key (for further information on the LMV.., see the related manual).
- Check that the pressure switches/thermostats series enables the burner operation.
- Check that the gas pressure is sufficient (signalled by an error code on the AZL.. display).
- **Burners fitted with gas proving system:** the gas proving system test begins; when the test is performed the proving system LED turns on. At the end of the test, the burner staring cycle begins: in case of leakage in a valve, the gas proving system stops the burner and the lamp **B1** turns on.
- At the beginning of the start-up cycle, the actuator drives the air damper to the maximum opening position, then the fan motor starts up: the pre-purge phase begins. During the pre-purge phase, the air damper complete opening is signalled by the light **B2** on (see front panel).
- At the end of the pre-purge, the air damper is driven to the ignition position, the ignition transformer is energised (signalled by the light **B4** on the front panel) then, few seconds later, the EV1 and EV2 gas valves are energised (light G1 and G2 on the front panel).
- Few seconds after the gas valves opening, the ignition transformer is de-energised and light **B4** turns to off.
- The burner operates in the low flame stage; few seconds later the two-stages operation begins and the burner output increases or decreases, driven by the external thermostats (progressive burners) or by the modulator (fully-modulating burners).

.

## ADJUSTING AIR AND GAS FLOW RATES

***WARNING! During commissioning operations, do not let the burner operate with insufficient air flow (danger of formation of carbon monoxide); if this should happen, make the fuel decrease slowly until the normal combustion values are achieved.***
***WARNING! the combustion air excess must be adjusted according to the values in the following chart.***

| Recommended combustion parameters | | |
|---|---|---|
| Fuel | Recommended (%) $CO_2$ | Recommended (%) $O_2$ |
| Natural gas | 9 ÷ 10 | 3 ÷ 4.8 |
| LPG | 11 ÷ 12 | 2.8 ÷ 4.3 |

### *Adjustments - brief description*

The air and fuel rates adjustments must be performed at the maximum ouptput first (“high flame”): see the LMV related manual.

- Check that the combustion parameters are in the suggested limits.
- Check the flow rate measuring it on the counter or, if it was not possible, verifying the combustion head pressure by means of a differential pressure gauge, as described on par. “Measuring the gas pressure in the combustion head”.
- Then, adjust the combustion values by setting the “gas/air” ratio” curvepoints (see the LMV related manual).
- Set, now, the low flame output (according to the procedure described on the “Siemens LMV manual”) in order to avoid the low flame output increasing too much or that the flues temperature gets too low to cause condensation in the chimney.

## (First) Start-up preliminary operations - gas supply

Recommended actions to be carried out in sequence:

1 Check the burner and all its components are installed correctly
2 Check that all electrical and mechanical parts are connected correctly
3 Check that there is water or other vector fluids in the generator
4 Check that the ventilation gates/dampers in the plant are open and the stack is free
5 Connect the gauges used to adjust and check pressures on the incoming line and on the head, air and fuel side.
6 Open the thermostatic series and the safety chain
7 Turn the main switch on the panel front with the "MAN/AUTO" selector to position "0".
8 Select the GAS mode with the fuel selector on the front of the panel (if any)
9 Check the phase and neutral position is correct
10 Open the manual shut-off valves slowly, in order to prevent any water hammers that might seriously damage valves and pressure regulator
11 Check the sense of rotation of the electrical motors
12 Bleed the line, getting rid of all the air in the pipe as far as the main gas valve
13 Ensure the pressure entering the main valves is not excessive due to damage to or wrong adjustment of the line pressure regulator
14 Ensure the gas supply minimum pressure is at least equal to the pressure required by the pressure curves - burnt gas flow

***DANGER! Venting the air from the piping must take place in safe conditions, avoiding dangerous concentrations of fuel in the rooms. You must therefore ventilate the rooms and wait long enough for the gases to dissipate outside before switching on.***

***To ensure the proper operation of the flow sensors, the fuel/air pipes must be free of liquid residues such as oil or water. Also, make sure that the silencer is installed on the air intake.***

## VERSION WITH FGR <80 mg / kwh - <120 mg / kwh

### Adjustments - brief description

The air and fuel rates adjustments must be performed at the maximum ouptput first (“high flame”): see the LMV related manual.

- Check that the combustion parameters are in the suggested limits.
- Check the flow rate measuring it on the counter or, if it was not possible, verifying the combustion head pressure by means of a differential pressure gauge, as described on par. “Measuring the gas pressure in the combustion head”.
- Then, adjust the combustion values by setting the “gas/air” ratio” curvepoints (see the LMV related manual).
- Set, now, the low flame output (according to the procedure described on the “Siemens LMV manual”) in order to avoid the low flame output increasing too much or that the flues temperature gets too low to cause condensation in the chimney.

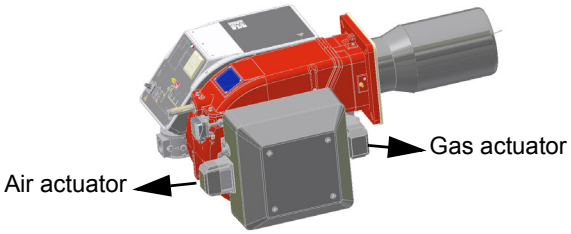


## FGR < 50 mg/kwh

## VERSION WITH FGR <50 mg / kwh

Adding fumes reduces the flame temperature and produces less NOx nitrogen oxides.

## *Adjustments - brief description*

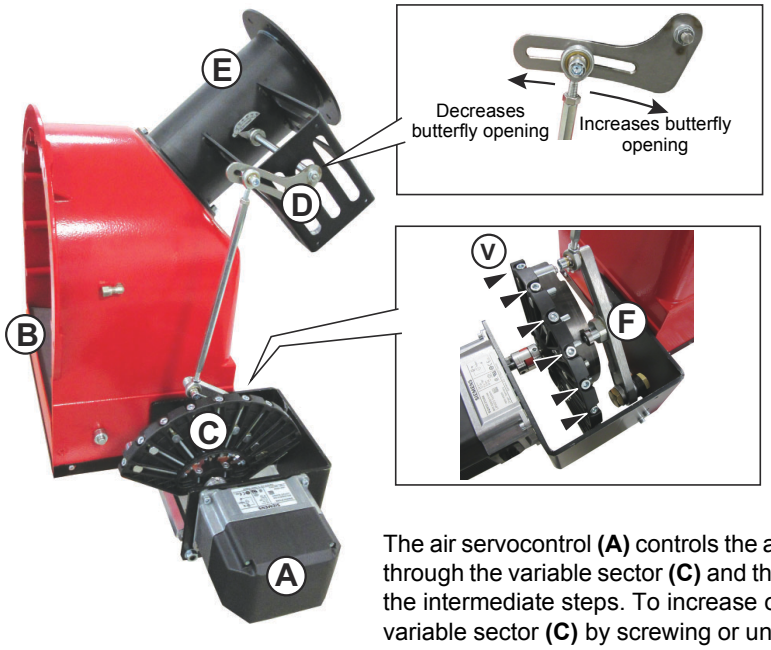


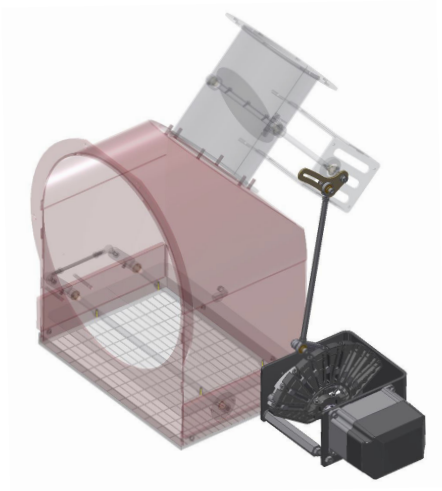

The air servocontrol **(A)** controls the air damper **(B)** and the recirculation flue gas inlet **(E)** through the variable sector **(C)** and the slotted cam **(D)**. The variable sector **(C)** regulates the intermediate steps. To increase or decrease the flow rate of the fumes, act on the variable sector **(C)** by screwing or unscrewing the screws **(V)** point by point. **(D)** Further separate adjustment with the slotted cam to determine the maximum throttle opening **(E)** at maximum burner output. **(E)** FGR butterfly valve.

The air and fuel flow rates are set at maximum power ("high flame") first: consult the attached LMV manual.
When adjusting the burner air / gas curves with AZL (see attached instructions LMV2x) for the various points that are set on the LMV2x / 3x, it is possible to adjust the opening of the Fume Recirculation Butterfly **(E)**.

The air and fuel flow rates are set at maximum power ("high flame") first: consult the attached LMV manual.

During the calibration of the maximum point P9 of the LMV, it is possible through the slotted cam **(D)** to lock the maximum opening of the butterfly. Recirculating Fumi FGR **(E)**.

Adjust the air / fuel ratio by acting on the AZL display and commanding the position of the servo controls dedicated to air damper and gas throttle.

Through the variable sector (C):- By screwing the screw **(V)** in correspondence with the guide bearings **(F)**, the opening of the Fumes Recirculation Butterfly- Increases and consequently the percentage of the recirculation fumes increases.

- Unscrewing the screw **(V)** in correspondence with the guide bearings **(F)** decreases the opening of the Flue Recirculation Butterfly and consequently decreases the percentage of the recirculation fumes.Check that the combustion parameters are within the recommended limits.

Check the flow rate by measuring it at the meter or, if this is not possible, by checking the pressure in the combustion head with a differential pressure gauge, as described in the paragraph "Gas pressure curves in the combustion head according to the flow rate".

Then, adjust the combustion by defining the points of the "gas / air ratio" curve (see the attached LMV manual). Finally, adjust the power of the low flame (following the instructions in the attached documentation for Siemens LMV) in order to avoid that the power in low flame is too high or that the temperature of the fumes is too low to cause condensation in the chimney.

**MPORTANT: During the adjustment procedure always check that the combustion parameters are in the suggested limits**

.

## *User interface*

The AZL2x.. display is shown below:
The keys functions are the following:

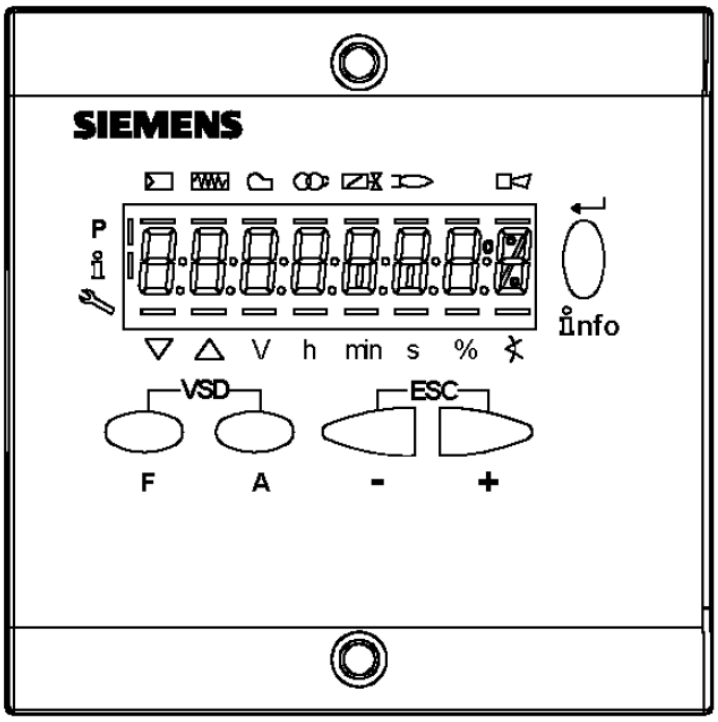

**Key F**
Used to adjust the “fuel” actuator position (**F**uel): :
While pressing the **F** key, the “fuel” actuator position can be changed by means of the **+** and **-** keys.

**Key A**
Used to adjust the “air” actuator position (**A**ir):
While pressing the **A** key, the “air” actuator position can be changed by means of the **+** and **-** keys.

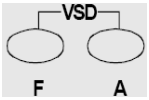


**Key F + A**
While pressing the two keys contemporarly, the **code** message will appear: by entering the proper password it is possible to access the **Service** mode.

**Info and Enter keys**
Used for **Info** and **Service** menues
Used as **Enter** key in the setting modes
Used as **Reset** key in the burner operation mode
Used to enter a lower level menu

**-Key -**
Used to decrease a a value
Used to enter Info and Serivce during the curve adjustments

**+Key +**
Used to increase a a value
Used to enter Info and Serivce during the curve adjustments

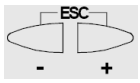


**Keys (+ & - )= ESC**
By pressing + and - at the same time, the ESCAPE function is perfomed:

to enter a lower level menu

The display will show these data:

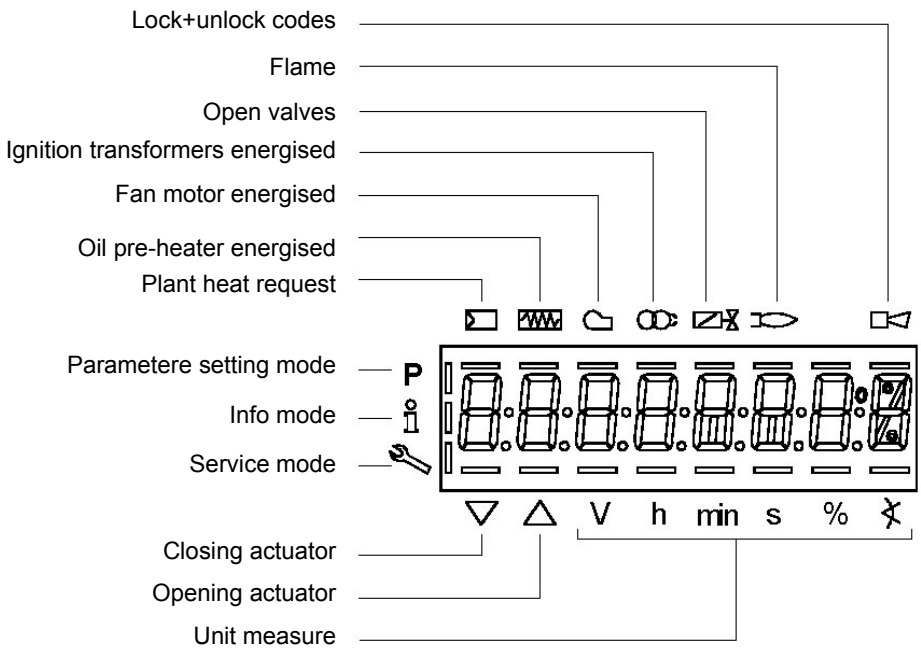


The display will show these data:

**Setting menu**

The setting menu is divided into different blocks:

| Bloc. | Descrizione | Description | Password |
|---|---|---|---|
| 100 | Informazioni generali | General | OEM / Service / Info |
| 200 | Controllo bruciatore | Burner control | OEM / Service |
| 400 | Curve rapporto | Ratio curves | OEM / Service |
| 500 | Controllo rapporto | Ratio control | OEM / Service |
| 600 | Servocomandi | Actuators | OEM / Service |
| 700 | Storico errori | Error history | OEM / Service / Info |
| 900 | Dati di processo | Process data | OEM / Service / Info |

The accesses to the various blocks are allowed by passwords. Passwords are divided into three levels:

- User level (info): no password needed
- Service level (Service)
- Manifacturer level (OEM)

**PHASES LIST**

During operation, the following program phases are shown. The meaning for each phase is quoted in the table below

| Fase / Phase | Funzione | Function |
|---|---|---|
| Ph00 | Fase blocco | Lockout phase |
| Ph01 | Fase di sicurezza | Safety phase |
| Ph10 | t10 = tempo raggiungimento posizione riposo | t10 = home run |
| Ph12 | Pausa | Standby (stationary) |
| Ph22 | t22 = tempo di salita ventilatore (motore ventilatore = ON, valvola intercetta-zione di sicurezza = ON) | t22 = fan ramp up time (fan motor = ON, safety shutoff valve = ON) |
| Ph24 | Verso posizione preventilazione | Traveling to the prepurge position |
| Ph30 | t1 = tempo preventilazione | t1 = prepurge time |
| Ph36 | Verso posizione accensione | Traveling to the ignition position |
| Ph38 | t3 = tempo preaccensione | t3 = preignition time |

| | | |
|---|---|---|
| Ph40 | TSA1 = primo tempo sicurezza (trasformatore accensione ON) | TSA1= 1st safety time (ignition transformer ON) |
| Ph42 | TSA1 = primo tempo sicurezza (trasformatore accensione OFF) | TSA1 = 1st safety time (ignition transformer OFF)<br>t42 = preignition time OFF |
| Ph44 | t44 = intervallo 1 | t44 = interval 1 |
| Ph50 | TSA2 = secondo tempo sicurezza | TSA2 = 2nd safety time |
| Ph52 | t52 = intervallo 2 | t52 = interval 2 |
| Ph60 | Funzionamento 1 (stazionario) | Operation 1 (stationary) |
| Ph62 | t62 = massimo tempo bassa fiamma (funzionamento 2, in preparazione per spegnimento, verso bassa fiamma) | t62 = max. time low-fire (operation 2, preparing for shutdown, traveling to low-fire) |
| Ph70 | t13 = tempo postcombustione | t13 = afterburn time |
| Ph72 | Verso posizione postcombustione | Traveling to the postpurge position |
| Ph74 | t8 = tempo postventilazione | t8 = postpurge time |
| Ph80 | t80 = tempo evacuazione controllo tenuta valvole | t80 = valve proving test evacuation time |
| Ph81 | t81 = tempo perdita pressione atmosferica, prova atmosferica | t81 = leakage time test time atmospheric pressure, atmospheric test |
| Ph82 | t82 = test perdita, test riempimento | t82 = leakage test filling test, filling |
| Ph83 | t83 = tempo perdita pressione gas, test pressione | t83 = leakage test time gas pressure, pressure test |
| Ph90 | Tempo attesa “mancanza gas” | Gas shortage waiting time |

**Entering the Parameter levels**

By means of a proper use of the keys, it is possible to enter the various level parameters, as shown in the following flow chart:

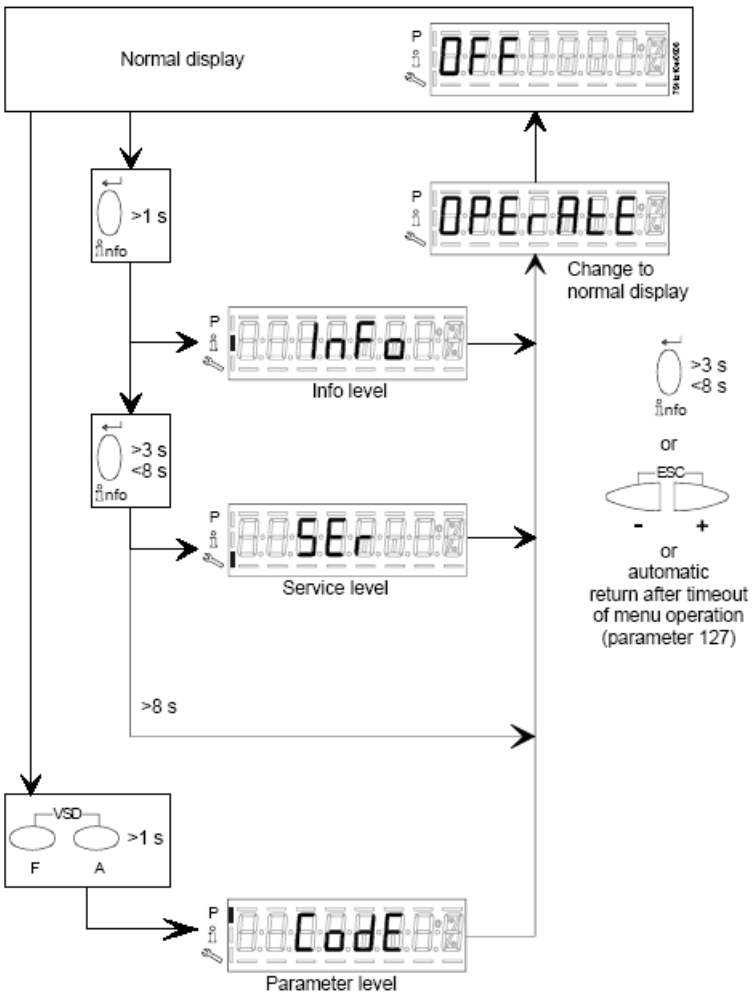


The burner and consequently the LMV2x.. are factory set; the air and fuel curves as set as well.

**Info level**

To enter the **Info** level, proceed as follows:

1 in any menu position, press keys **+** and **-** at the same time, then the program will start again: the display will show **OFF**.

2 until the display will show **InFo**, Press the **enter (InFo)** key

3 then il will show the first code (167) flashing, on the right side it will show the data entered. By pressing **+** or **-** it is possible to scroll (up or down) the parameter list.

4 If a dot-line is shown on the right, there is no enough room for complete visualisation: press **enter** again the data will be completely shown for 1 to 3 seconds. By pressing **enter** or **+** and**-** at the same time, the system will exit the parameter visualisation and go back to the flashing number.

The **Info** level shows some basic parameters as:

| ***Parameter*** | ***Description*** |
|---|---|
| 167 | Cubic meters of fule (resettable) |
| 162 | Operating hours (resettable) |
| 163 | Device operating hours |
| 164 | Burners start-ups (resettable) |
| 166 | Total number of start-ups |
| 113 | Burner number (i.e. serial number) |
| 107 | Software version |
| 102 | Software date |
| 103 | Device serial number |
| 104 | Customer code |
| 105 | Version |
| 143 | Free |

5 Example: choose parameter 102 to show the date

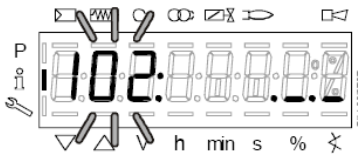


the display shows parameter **102** flashing on the left and characters **._._** on the right.

6 press InFo for 1-3 seconds: the date will appear

7 press InFo to go back to parameter “102”

8 by pressing + / -, it is possible to scroll up/down the parameter list (see table above), or, by pressing ESC or InFo for more seconds, the display will show

9 Once the last parameter is accessed (143) by pressing **+** , the **End** message will flash.

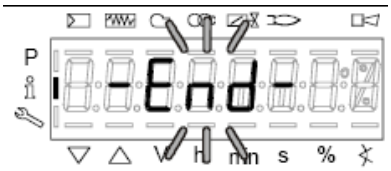


10 Press **InFo**

for more than three seconds or for more than three seconds orto return to the normal display.

If a message like the one below is shown during operation,

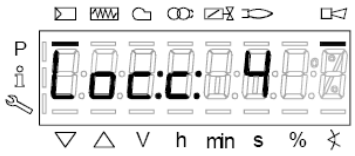


it means that the burner is locked out and the Errore code is shown (in the example “error code:4”); this message is alternating with another message

Diagnostic code (in the example “diagnostic code:3”). Record the codes and find out the fault in the Error table.
To perform the reset, press InFo for one second:

The unit displays an event which does not lead to shutdown.
The display shows current error code **c:** alternating with diagnostic code **d**:

.
Press **InFo** to return to the display of phases.
Example: Error code **111** / diagnostic code 0

To reset, press InFo for a second. Record the codes and check the Error List to find the type of faults.

**Service level**
To enter the Service mode, press InFo until the display will show:

The service level shows all the information about flame intensity, actuators position, number and lock codes:

| *Parameter* | *Description* |
|---|---|
| 954 | Flame intensity |
| 121 | % output, if set = automatic operation |
| 922 | Actuators position, 00=combustibile; 01= aria |
| 161 | Lock-outs number |
| 701..725 | Lock-outs History (see chapter 23 in the LMV2x manual) |

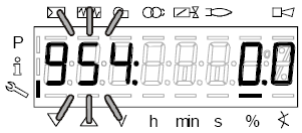


1 .the first parameter will be “954”: the percentage of flame is shown on the right. By pressinf + or - it is possible to scroll up/down the parameter list.

2 Once the last parameter is accessed (143) by pressing **+** , the **End** message will blink.

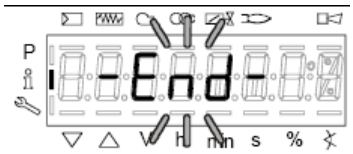


3 Press **InFo**

for more than three seconds or for more than three seconds orto return to the normal display.

For further nformation, see tha LMV2 related manual.

## *Fully modulating burners*

To adjust the fully-modulating burners, use the **S3** switch on the burner control panel (see next picture), instead of the **TAB** thermostat as described on the previous paragraphs about the progressive burners. Go on adjusting the burner as described before, paying attention to use the CMF switch intead of **TAB**.

The **S3** position sets the oprating stages: to drive the burner to the high-flame stage, set S3=MAX; to drive it to the low-flame stage, set S3=MIN.

To move the adjusting cam set S3=MIN or MAX and then S3=MAN.

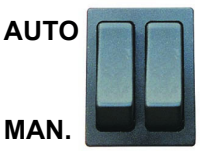


**S3**
MAN stop at the current position
MAX high flame operation
MIN low flame operation
AUTO automatic operation

## *Adjusting the gas valves group*

## Multibloc MB-DLE

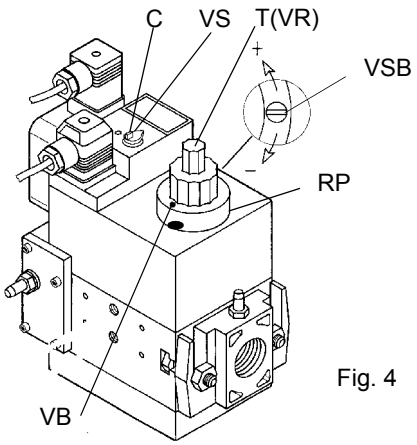


Fig. 4

The multibloc unit is a compact unit consisting of two valves, gas pressure switch, pressure stabilizer and gas filter.

The valve is adjusted by means of the **RP** regulator after slackening the locking screw **VB** by a number of turns. By unscrewing the regulator **RP** the valve opens, screwing the valve closes. To set the fast opening remove cover **T**, reverse it upside down and use it as a tool to rotate screw **VR**. Clockwise rotation reduces start flow rate, anticlockwise rotation increases it.

Do not use a screwdriver on the screw **VR**!

The pressure stabilizer is adjusted by operating the screw **VS** located under the cover **C**. By screwing down the pressure is increased and by unscrewing it is reduced.

Note: the screw **VSB** must be removed only in case of replacemente of the coil.

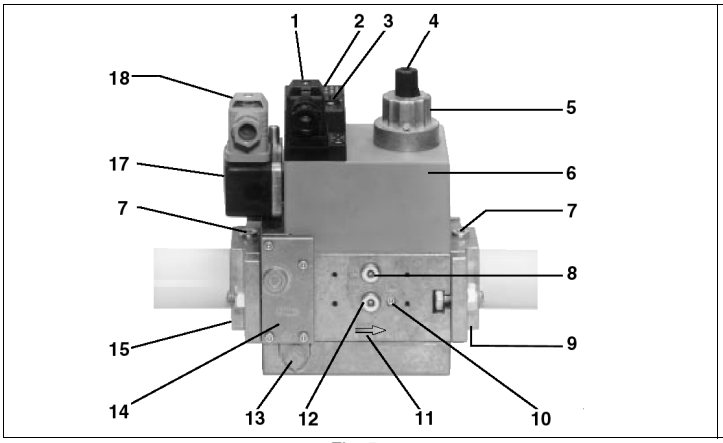


Fig. 5

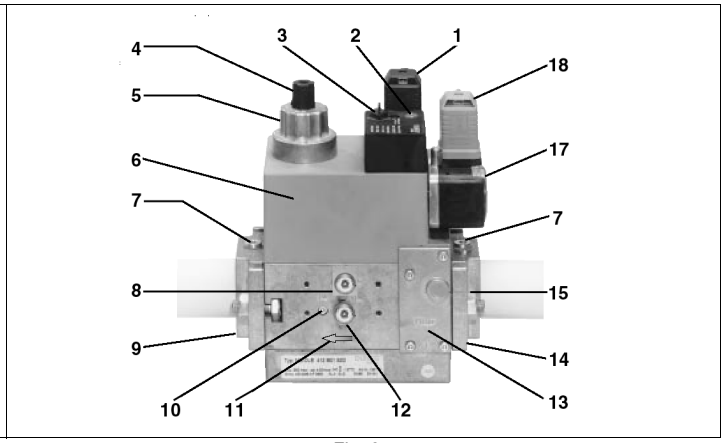


Fig. 6

**Key**

1 Electrical connection for valves
2 Operation display (optional)
3 Pressure governor closing tap
4 Start setting cap
5 Hydraulic brake and rate regulator
6 Coil
7 Test point connection G 1/8
8 Test point connection G 1/8 downstream of valve 1, on both sides
9 Output flange
10 Test point connection M4 downstream of valve 2
11 Gas flow direction
12 Test connection G 1/8 downstream of valve 1, on both sides
13 Vent nozzle pressure regulator
14 Filter (below cover)
15 Input flange
17 Pressure switch
18 Pressure switch electric connection

## *Gas valveversion with SKP2 (built-in pressure stabilizer)*

To increase or decrease gas pressure, and therefore gas flow rate, remove the cap **T** and use a screwdriver to adjust the regulating screw **VR**. Turn clockwise to increase the flow rate, counterclockwise to reduce it.

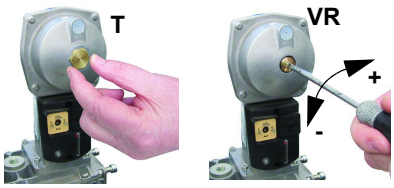

## MultiBloc MBE *Regulation VD-R whith PS*

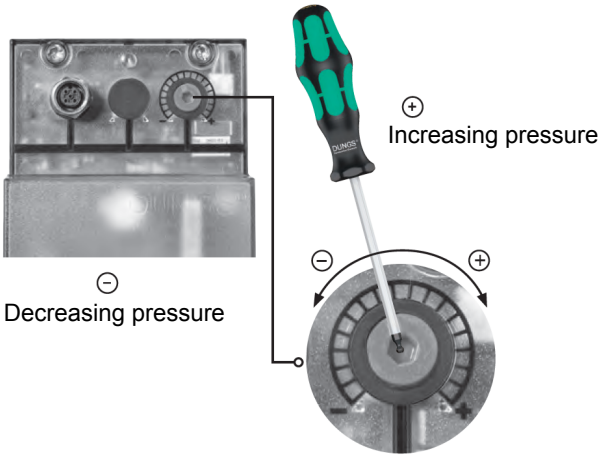


Fig. 7

***Setting scale is „Not“ linear! Various sensors available. Output pressure according to sensor‘s measuring range.***

***Adjust the outlet pressure to the value specified by the burner or equipment manufacturer!***

***While making outlet pressure adjustments, do not exceed a value that creates a hazardous condition to the burner!***

**ATTENTION:** To set the outlet pressure of the VD-R regulator, act on the adjustment ring nut (Fig. 10)
The position of the indicator in the dial indicates the value of the outlet pressure calculated as a percentage of the full scale of the PS sensor (Fig. 11)

| Outlet pressure | MIN | 10% | 25% | 50% | 75% | MAX |
|---|---|---|---|---|---|---|
| **PS-10/40** | 4 mbar<br>0,4 kPa<br>2 "w.c. | 10 mbar<br>1,0 kPa<br>4 "w.c. | 25 mbar<br>2,5 kPa<br>10 "w.c. | 50 mbar<br>5,0 kPa<br>20 "w.c. | 75 mbar<br>7,5 kPa<br>30 "w.c. | 100 mbar<br>10,0 kPa<br>40 "w.c. |
| **PS-50/200** | 20 mbar<br>2,0 kPa<br>8 "w.c. | 50 mbar<br>5,0 kPa<br>20 "w.c. | 125 mbar<br>12,5 kPa<br>50 "w.c. | 250 mbar<br>25,0 kPa<br>100 "w.c. | 375 mbar<br>37,5 kPa<br>150 "w.c. | 500 mbar<br>50,0 kPa<br>200 "w.c. |

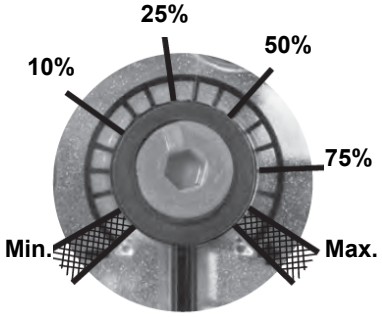


Fig. 8

Adjusting output pressure for positive pressure systems (requires PS-10/40 or PS-50/200):

## *Pressure taps* MultiBloc MBE

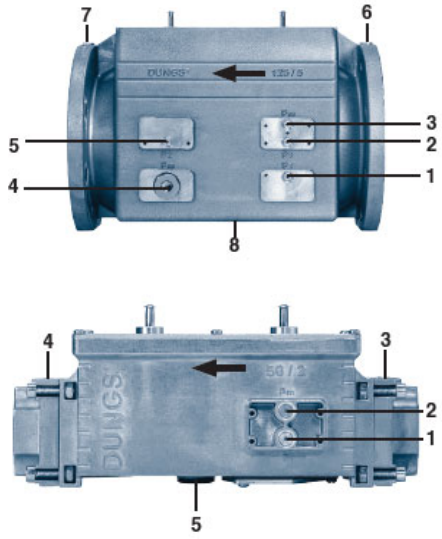


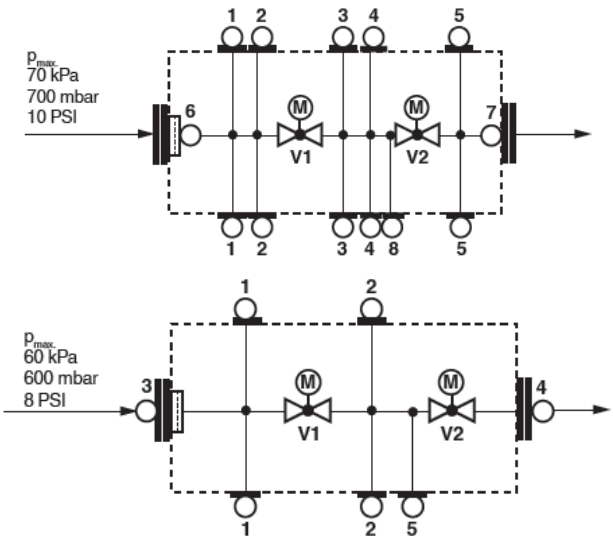


**1, 2, 3, 5**
Sealing plug

G ⅛ ISO 228

**4**
For system accessories

G ¾

Fig. 9

## Calibration air and gas pressure switches

The **air pressure switch** locks the control box if the air pressure is not the one requested. If it happens, unlock the burner by means of the control box unlock pushbutton, placed on the burner control panel.

The **gas pressure switches** check the pressure to avoid the burner operate when the pressure value is not in the requested pressure range.

## Calibration the maximum gas pressure switch (when provided)

To calibrate the maximum pressure switch, proceed as follows according to its mounting position:

- remove the pressure switch plastic cover;
- if the maximum pressure switch is mounted upstreaam the gas valves: measure the gas pressure in the network, when flame is off; by means of the adjusting ring nut **VR**, set the value read, increased by the 30%.
- if the maximum pressure switch is mounted downstream the “gas governor-gas valves” group and upstream the butterfly valve: light the burner, adjust it according to the procedure in the previous paragrph. Then, measure the gas pressure at the operating flow rate, downstream the “gas governor-gas valves” group and upstream the butterfly valve; by means of the adjusting ring nut **VR**, set the value read on step 2, increased by the 30%;
- replace the plastic cover.

## Calibration of air pressure switch

To calibrate the air pressure switch, proceed as follows:

- Remove the transparent plastic cap.
- Once air and fuel setting have been accomplished, startup the burner.
- During the pre-purge phase o the operation, turn slowly the adjusting ring nut **VR** in the clockwise direction (to increase the adjusting pressure) until the burner lockout, then read the value on the pressure switch scale and set it to a value reduced by 15%.
- Repeat the ignition cycle of the burner and check it runs properly.
- Refit the transparent plastic cover on the pressure switch.

## Calibration of low gas pressure switch

As for the gas pressure switch calibration, proceed as follows:

- Be sure that the filter is clean.
- Remove the transparent plastic cap.
- While the burner is operating at the maximum output, test the gas pressure on the pressure port of the minimum gas pressure switch.
- Slowly close the manual cutoff valve (placed upstream the pressure switch, see gas train installation diagram), until the detected pressure is reduced by 50%. Pay attention that the CO value in the flue gas does not increase: if the CO values are higher than the limits laid down by law, slowly open the cutoff valve as to get values lower than these limits.
- Check that the burner is operating correctly.
- Clockwise turn the pressure switch adjusting ring nut (as to increase the pressure value) until the burner stops.
- Slowly fully open the manual cutoff valve.
- Refit the transparent plastic cover on the pressure switch.

## Calibration the maximum gas pressure switch (when provided)

To calibrate the maximum pressure switch, proceed as follows according to its mounting position:

- remove the pressure switch plastic cover;
- if the maximum pressure switch is mounted upstreaam the gas valves: measure the gas pressure in the network, when flame is off; by means of the adjusting ring nut **VR**, set the value read, increased by the 30%.
- if the maximum pressure switch is mounted downstream the “gas governor-gas valves” group and upstream the butterfly valve: light the burner, adjust it according to the procedure in the previous paragrph. Then, measure the gas pressure at the operating flow rate, downstream the “gas governor-gas valves” group and upstream the butterfly valve; by means of the adjusting ring nut **VR**, set the value read on step 2, increased by the 30%;
- replace the plastic cover.

## *Head adjusting*

The combustion head position affects the flame stability.The diffuser position must be set during the commissioning according to the regulation needs. The diffuser position is factory set as shown in figure ”A” (x = 10 mm). If different settings are required, it is possible to change the position: loosen the VB screw and slightly move the combustion head backwards, turning clockwise the knob VRT. Fasten VB screw when the adjustment is accomplished.

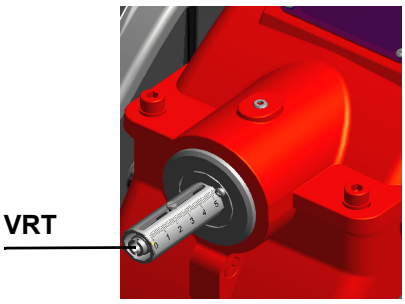


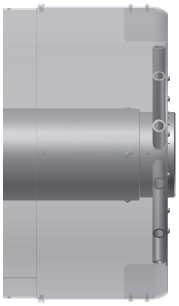

“all-ahead” position

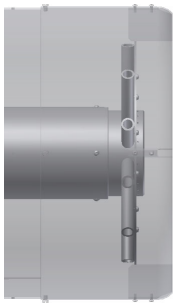

“all-backwards” head position

Depending on the boiler application, it is possible to act on the holes (figure B) to improve the flame stability and NOx, CO emission values. If necessary, close/open the holes in figure “B” using the screws kit given with the burner.

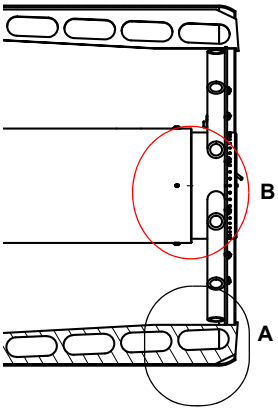


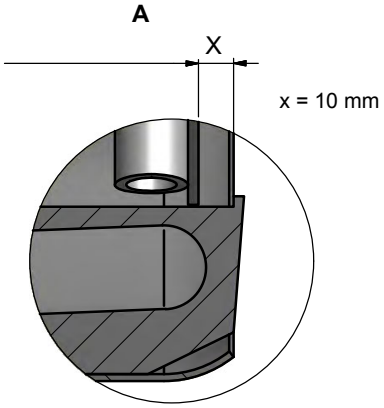


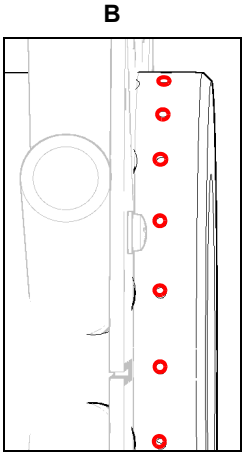


***CAUTION: perform these adjustments once the burner is turned off and cooled.***

***Attention! if it is necessary to change the head position, repeat the air and fuel adjustments described above.***

# PART IV: MAINTENANCE

At least once a year carry out the maintenance operations listed below. In the case of seasonal servicing, it is recommended to carry out the maintenance at the end of each heating season; in the case of continuous operation the maintenance is carried out every 6 months.

The replacement, adjustment and assembly of groups and/or components must be performed in the spaces provided during the installation phase and correct aeration of the rooms. Any operation must be carried out by qualified, trained and informed personnel, in compliance with the Manufacturer's instructions and the regulations in force. For anything not expressly mentioned in this chapter, contact the Manufacturer.The use of non original spare parts, any modification or even slight tampering, void the Warranty and release the Manufacturer from any responsibility regarding the functionality of the system the burner has been installed in, and the safety of people and/or property.

***ATTENTION: Read carefully the "warnings" chapter at the beginnig of this manual.***

***WARNING: All operations on the burner must be carried out with the mains disconnected and the fuel manaul cutoff valves closed!***

***ATTENTION! Any maintenance, cleaning or check intervals are a mere indication: the functionality of the burner - and its components - depends, among other things, from capacity utilisation rate, environment, nature and quality of the fuels used.***

## ROUTINE MAINTENANCE

- Check that the gas meter is not moving when the burner is off. In case it is rotating, look for possible leaks.
- Check the cleaning condition of the vent. Clean the vent by using exclusively a dry brush. If needed, disassemble it from the motor's shaft and wash it by using non corrosive detergents. Prior to disassemble the vent, take the measurements in relation to the motor's shaft, so as to reassemble it in the same position.
- Check that all parts in contact with combustive air (air box, protection mesh and Archimedean screw) are clean and free from any obstruction that might impede free afflux. Clean it with compressed air if available and/or a dry brush or cloths. Eventually wash it with non corrosive detergents.
- Check the blast tube; it must be substituted in case of obvious cracks or anomalous holes. Slight deformations that do not affect combustion may be tolerated
- Check the condition of the burner-boiler gasket. Eventually substitute it.
- Check the fan's motor: no specific maintenance is needed. In case of anomalous noises when running, check the condition of the bearings and eventually substitute them or completely substitute the motor.
- Clean and examine the gas filter cartridge and replace it if necesssary;
- Remove and clean the combustion head;
- Examine and clean the ignition electrodes, adjust and replace them if necessary;
- Examine and clean the detection electrode/photoelement (according to the burner models), replace it if necessary, in case of doubt, check the detection circuit, after the burner start-up;
- Clean and grease leverages and rotating parts.
- At least every 2 months, or more often if needed, clean the room where the burner is installed.
- Avoid leaving installations, papers, nylon bags, etc., inside the room. They could be sucked by the burner and cause malfunctioning.
- Check that the room's vents are free from obstructions.

***ATTENTIONwhen servicing, if it was necessary to disassemble the gas train parts, remember to execute the gas proving test, once the gas train is reassembled, according to the procedure imposed by the law in force.***

## *Adjusting the gas valves group and removing the filter*

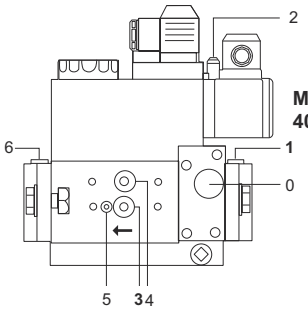


**0** Coperchio del filtro
**1,3,4,6** Tappo a vite G 1/8
**2** Attacco misuratore
**5** Tappo a vite M4

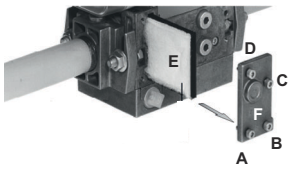


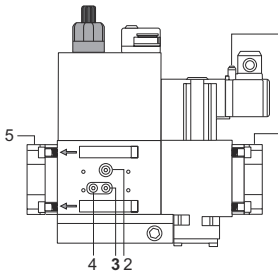


**0, 1, 2, 3, 4, 5**
Tappo a vite G 1/8

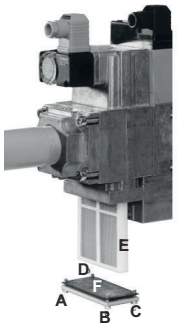


**Prese di pressione**

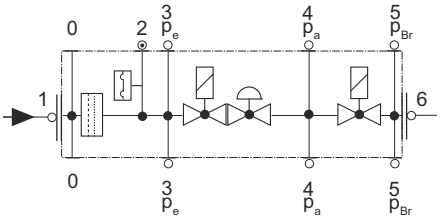


**Prese di pressione**

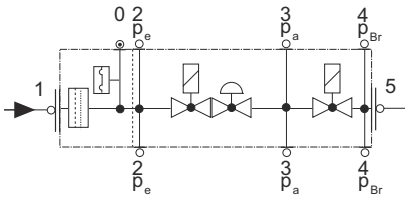


- Check the filter at least once a year!
- Change the filter if the pressure difference between pressure connection 1 and 3 (Fig. 1-Fig. 3)is $\Delta p > 10$ mbar.
- Change the filter if the pressure difference between pressure connection 1 and 3 (Fig. 1-Fig. 3) is twice as high compared to the last check.

You can change the filter without removing the fitting.

1 Interrupt the gas supply closing the on-off valve.
2 Remove screws 1 ÷ 4 using the Allen key n. 3 and remove filter cover 5 in Fig. 5.
3 Remove the filter 6 and replace with a new one.
4 Replace filter cover 5 and tighten screws 1 ÷ 4 without using any force and fasten.
5 Perform leakage and functional test, $p_{max.}$ = 360 mbar.

## MultiBloc MBE*MultiBloc VD Mounting*

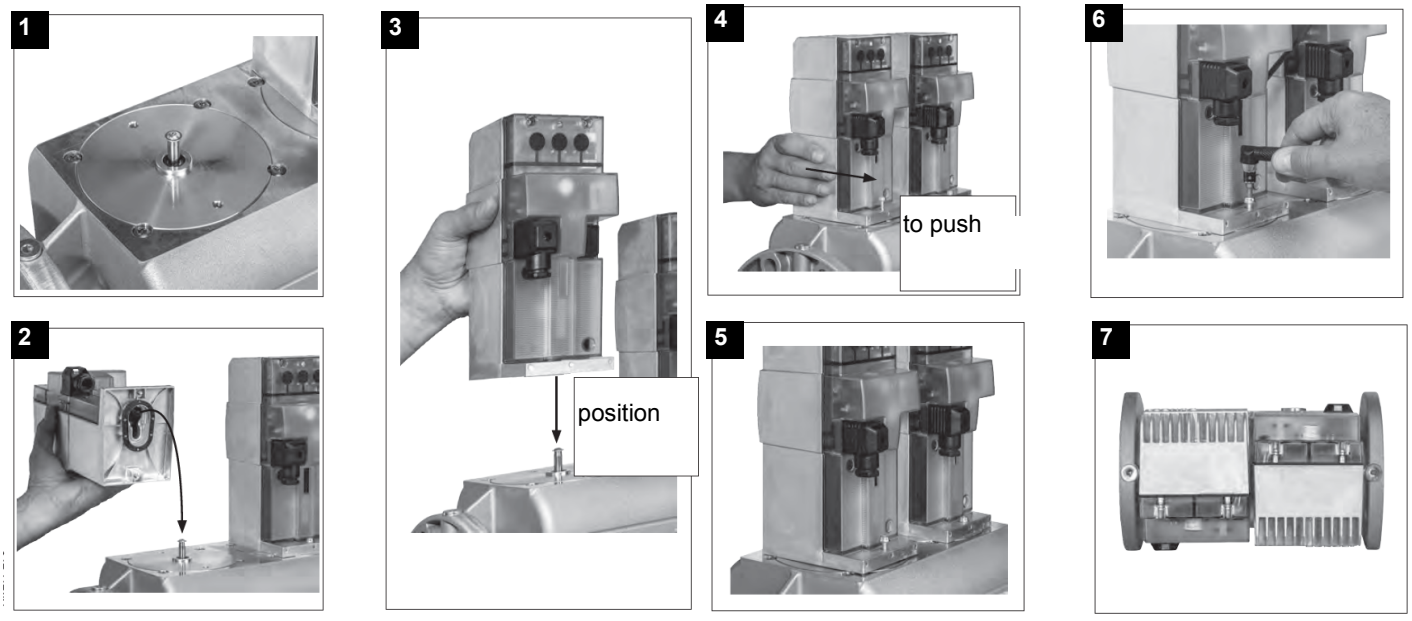


1. Position VD on VB, fig. 2+3.
2. Slide VD forward up to the stop, fig. 4.
3. Screw VD on with 2 M5 screws for each, max. 5 Nm/44 in.-lb., fig. 5/6.
4. VD can be mounted rotated by 180°, fig. 7.

## Gas filter maintenance

To clean or remove the filter, proceed as follows:

1 remove the cap unscrewing the fixing screws (A);
2 remove the filtering cartridge (B), clean it using water and soap, blow it with compressed air(or replace it, if necessary)
3 replace the cartridge in its proper position taking care to place it inbetween the guides as not to hamper the cap replacement;
4 be sure to replace the “O” ring into its place (C) and replace the cover fastening by the proper screws (A).

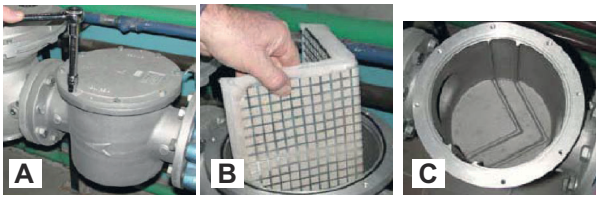


***WARNING: Before opening the filter, close the manual cutoff valve downstream the filter and bleed the gas; check that inside the filter there is no pressurised gas.***

## Removing the combustion head

- Remove the burner cover C.
- Unscrew the screws V holding in position the manifold G and pull out the complete group as shown in the picture.

Note: for the subsequent assembly carry out the above described operations in the reverse order, checking the correct position of the OR ring.

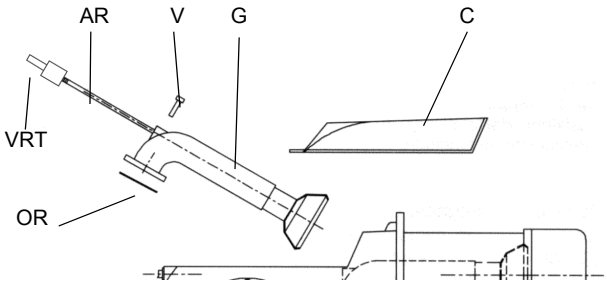


## Replacing the ignition electrodes

**ATTENTION:** avoid the ignition and detection electrodes to contact metallic parts (blast tube, head, etc.), otherwise the boiler’s operation would be compromised. Check the electrodes position after any intervention on the combustion head.

To replace the electrodes, proceed as follows:

1 remove the burner cover **C;**r
2 disconnect the electrodes cables;
3 emove the combustion head referring to paragraph “Removing the combustion head”;
4 unscrew **VE** screws that fasten the electrodes (see next pictures)
5 remove the electrodes and replace them referring to the measures indicated in the previous paragraph;
6 reconnect the electrodes cables;
7 replace the combustion head;
8 replace the burner cover.

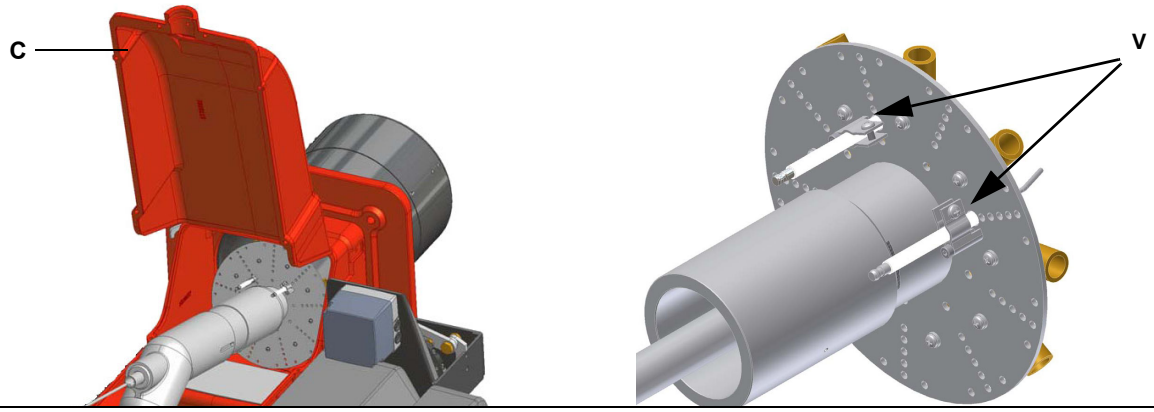

***ATTENTION: avoid the ignition and detection electrodes to contact metallic parts (blast tube, head, etc.), otherwise the boiler's operation would be compromised. Check the electrodes position after any intervention on the combustion head.***

Adjust the electrodes position according to the electrodes type installed on the burner. Follow the quotes shown on the next picture.

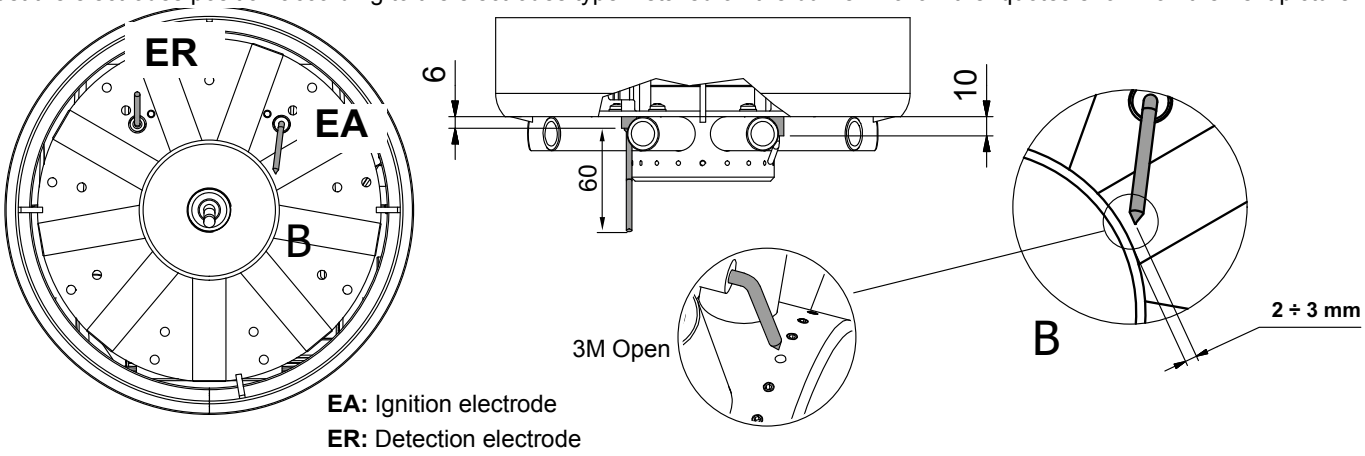


**EA:** Ignition electrode
**ER:** Detection electrode

## *Checking the detection current with electrode (natural gas)*

To check the detection signal follow the scheme in the picture below. If the signal is less than the value indicated, check the position of the detection electrode or detector, the electrical contacts and, if necessary, replace the electrode or the detector.

| Device | Flame detector | Minimum detection signal |
|---|---|---|
| Siemens LMV2x/3x | Ionization probe | 3 µA (values on display: 30%) |

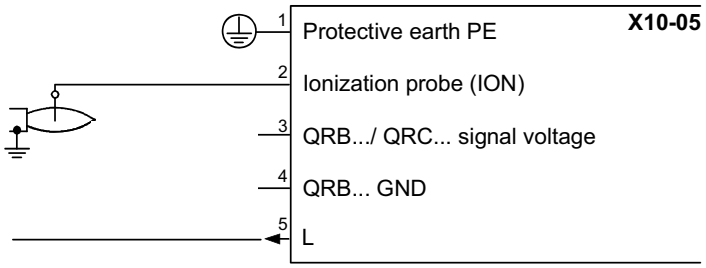


## *Burner service term*

- In optimal operating conditions, and with preventive maintenance, the burner can last up to 20 years.
- Upon expiry of the burner service term, it is necessary to carry out a technical diagnosis and, if necessary, an overall repair.
- The burner status is considered to be at its limit if it is technically impossible to continue using it due to non-compliance with safety requirements or a decrease in performance.
- The owner makes the decision whether to finish using the burner, or replacing and disposing of it based on the actual state of the appliance and any repair costs.
- The use of the burner for other purposes after the expiry of the terms of use is strictly prohibited.

## *Seasonal stop*

To stop the burner in the seasonal stop, proceed as follows:

1 turn the burner main switch to 0 (Off position)
2 disconnect the power mains
3 close the fuel valve of the supply line

## *Burner disposal*

In case of disposal, follow the instructions according to the laws in force in your country about the "Disposal of materials".

## TROUBLESHOOTNG GUIDE Gas operation

| | | |
|---|---|---|
| **BURNER DOESN'T LIGHT** | * No electric power supply | * Restore power supply |
| | * Main switch open | * Close switch |
| | * Thermostats open | * Check set points and thermostat connections |
| | * Bad thermostat set point or broken thermostat | * Reset or replace the thermostat |
| | * No gas pressure | * Restore gas pressure |
| | * Safety devices (manually operated safety thermostat, pressure switches and so on) open | * Restore safety devices; wait till boiler reaches operating temperature then check safety device functionality. |
| | * Broken fuses | * Replace fuses. Check current absorption |
| | * Fan thermal contacts open (three phases motors only) | * Reset contacts and check current absorption |
| | * Burner control lock out | * Reset and check its functionality |
| | * Burner control damaged | * Replace burner control |
| **GAS LEAKAGE: BURNER LOCKS OUT (NO FLAME)** | * Gas flow is too low | * Increase the gas flow<br>* Check gas filter cleanness<br>* Check butterfly valve opening when burner is starting (only Hi-Low flame and progressive) |
| | * Ignition electrodes discharge to ground because dirty or broken | * Clean or replace electrodes |
| | * Bad electrodes setting | * Check electrodes position referring to instruction manual |
| | * Electrical ignition cables damaged | * Replace cables |
| | * Bad position of cables in the ignition transformer or into the electrodes | * Improve the installation |
| | * Ignition transformer damaged | * Replace the transformer |
| **BURNER LOCKS OUT WITH FLAME PRESENCE** | * Bad flame detector set | |
| | * Flame detector damaged | * Replace or adjust flame detector |
| | * Bad cables of flame detector | * Check cables |
| | * Burner control damaged | * Replace burner control |
| | * Phase and neutral inverted | * Adjust connections |
| | * Ground missing or damaged | * Check ground continuity |
| | * Voltage on neutral | * Take off tension on neutral |
| | * Too small flame (due to not much gas) | * Adjust gas flow<br>* Check gas filter cleanness |
| | * Too much combustion air | * Adjust air flow rate |
| **only FOR LME22: BURNER CONTINUES TO PERFORM ALL ITS FEATURES WITHOUT IGNITING THE BURNER** | * Air pressure switch damaged or bad links | * Check air pressure switch functions and links |
| | * Burner control damaged | * Replace burner control |
| **BURNER LOCKS OUT WITHOUT ANY GAS FLOW** | * Gas valves don't open | * Check voltage on valves; if necessary replace valve or the burner control<br>* Check if the gas pressure is so high that the valve cannot open |
| | * Gas valves completely closed | * Open valves |
| | * Pressure governor too closed | * Adjust the pressure governor |
| | * Butterfly valve closed | * Open the butterfly valve |
| | * Maximum pressure switch open. | * Check connection and functionality |
| | * Air pressure switch doesn't close the NO contact | * Check connections<br>* Check pressure switch functionality |
| **THE BURNER IS BLOCKED AND THE EQUIPMENT PROVIDES A LOCK CODE "CAUSE AIR PRESSURE SWITCH FAULT"** | * Air pressure switch damaged (it keeps the stand-by position or badly set) | * Check air pressure switch functionality<br>* Reset air pressure switch |
| | * Air pressure switch connections wrong | * Check connections |
| | * Air fan damaged | * Replace motor |
| | * No power supply | * Reset power supply |
| | * Air damper too closed | * Adjust air damper position |
| **BURNER LOCKS OUT DURING NORMAL RUNNING** | * Flame detector circuit interrupted | * Check wiring<br>* Check photocell |
| | * Burner control damaged | * Replace burner control |
| | * Maximum gas pressure switch damaged or badly set | * Reset pressure switch or replace it |
| **THE BURNER STARTS AND AFTER A WHILE IT REPEATS THE STARTING CYCLE.** | * Gas pressure switch badly set | * Reset the pressure switch |
| | * Gas filter dirty | * Clean gas filter |
| | * Gas governor too low or damaged | * Reset or replace the governor |
| **BURNER STANDS WHILE RUNNING WITHOUT ANY SWITCHING OF THERMOSTATS** | * Thermal contacts of fan motor open | * Reset contacts and check values<br>* Check current absorption |
| **FAN MOTOR DOESN'T START** | * Internal motor wiring broken | * Replace wiring or complete motor |
| | * Fan motor starter broken | * Replace starter |
| | * Fuses broken (three phases only) | * Replace fuses and check current absorption |
| **BURNER DOESN'T SWITCH TO HIGH FLAME** | * Hi-low flame thermostat badly set or damaged | * Reset or replace thermostat |
| | * Servomotor cam badly set | * Reset servomotor cam |
| ***mechanical only*: SOMETIMES THE SERVOMOTOR RUNS IN THE WRONG WAY** | * Servomotor capacitor damaged | * Replace capacitor |

## WIRING DIAGRAMS

Refer to the attached wiring diagrams.

**WARNING**

1 - Electrical supply 230V / 400V 50Hz 3N a.c.

2 - Do not reverse phase with neutral

3 - Ensure burner is properly earthed

C.I.B. UNIGAS S.p.A.
Via L.Galvani, 9 - 35011 Campodarsego (PD) - ITALY
Tel. +39 049 9200944 - Fax +39 049 9200945/9201269
web site: www.cibunigas.it - e-mail: cibunigas@cibunigas.it

Note: specifications and data subject to change. Errors and omissions excepted.

# *AZL2x - LMV2x/3x*
# *Burner Management System*

## *Service manual*

M12916CD Rev. 3.4 03/2023

**INDEX**


*MICROPROCESSOR CONTROLLED SYSTEM* ..... 6

*User interface* ..... 6

*Parameters level (heating engineer)* ..... 8

*Setting menu* ..... 9

*Block 000: Internal Parameter* ..... 10

*Block 100: General information* ..... 10

*Block 200: Burner control* ..... 13

*Block 400: Setting air/fuel ratio curves* ..... 25

*Block 500: Air/fuel ratio control* ..... 26

*Block 600: Actuators* ..... 28

*Block 700: Error history* ..... 31

*Block 900: Process data* ..... 32

*Actuators references* ..... 33

*Gas proving system* ..... 33

*Air-fuel curve points* ..... 33

*COMMISSIONING THE BURNER* ..... 34

*Warm setting* ..... 38

*Cold setting* ..... 39

*BURNER STARTUP WITH LMV2x ALREADY PROGRAMMED* ..... 40

*Reset / manual lockout* ..... 42

*Timeout for menu operation* ..... 42

*Entering the Parameter levels* ..... 43

*Info level* ..... 44

*Service level* ..... 46

*PHASES LIST* ..... 47

*BACKUP PARAMETER WITH AZL2x* ..... 48

*RESTORE PARAMETER FROM AZL2x TO LMV..* ..... 49

*WIRING DIAGRAM* ..... 65

*Wiring connection for LMV20* ..... 65

*Wiring variants for LMV27* ..... 66

*Wiring variants for LMV26* ..... 67

*Wiring variants for LMV37* ..... 68

## DANGERS, WARNINGS AND NOTES OF CAUTION

**THIS MANUAL IS SUPPLIED AS AN INTEGRAL AND ESSENTIAL PART OF THE PRODUCT AND MUST BE DELIVERED TO THE USER.**

**INFORMATION INCLUDED IN THIS SECTION ARE DEDICATED BOTH TO THE USER AND TO PERSONNEL FOLLOWING PRODUCT INSTALLATION AND MAINTENANCE.**

**THE USER WILL FIND FURTHER INFORMATION ABOUT OPERATING AND USE RESTRICTIONS, IN THE SECOND SECTION OF THIS MANUAL. WE HIGHLY RECOMMEND TO READ IT.**

**CAREFULLY KEEP THIS MANUAL FOR FUTURE REFERENCE.**

### 1) GENERAL INTRODUCTION

- The equipment must be installed in compliance with the regulations in force, following the manufacturer's instructions, by qualified personnel.
- Qualified personnel means those having technical knowledge in the field of components for civil or industrial heating systems, sanitary hot water generation and particularly service centres authorised by the manufacturer.
- Improper installation may cause injury to people and animals, or damage to property, for which the manufacturer cannot be held liable.
- Remove all packaging material and inspect the equipment for integrity.

In case of any doubt, do not use the unit - contact the supplier.

The packaging materials (wooden crate, nails, fastening devices, plastic bags, foamed polystyrene, etc), should not be left within the reach of children, as they may prove harmful.

- Before any cleaning or servicing operation, disconnect the unit from the mains by turning the master switch OFF, and/or through the cut-out devices that are provided.
- Make sure that inlet or exhaust grilles are unobstructed.
- In case of breakdown and/or defective unit operation, disconnect the unit. Make no attempt to repair the unit or take any direct action.

Contact qualified personnel only.

Units shall be repaired exclusively by a servicing centre, duly authorised by the manufacturer, with original spare parts.

Failure to comply with the above instructions is likely to impair the unit's safety.

To ensure equipment efficiency and proper operation, it is essential that maintenance operations are performed by qualified personnel at regular intervals, following the manufacturer's instructions.

- When a decision is made to discontinue the use of the equipment, those parts likely to constitute sources of danger shall be made harmless.
- In case the equipment is to be sold or transferred to another user, or in case the original user should move and leave the unit behind, make sure that these instructions accompany the equipment at all times so that they can be consulted by the new owner and/or the installer.
- For all the units that have been modified or have options fitted then original accessory equipment only shall be used.
- This unit shall be employed exclusively for the use for which it is meant. Any other use shall be considered as improper and, therefore, dangerous.

The manufacturer shall not be held liable, by agreement or otherwise, for damages resulting from improper installation, use and failure to comply with the instructions supplied by the manufacturer.The occurrence of any of the following circustances may cause explosions, polluting unburnt gases (example: carbon monoxide CO), burns, serious harm to people, animals and things:

- Failure to comply with one of the WARNINGS in this chapter
- Incorrect handling, installation, adjustment or maintenance of the burner
- Incorrect use of the burner or incorrect use of its parts or optional supply

### 2) SPECIAL INSTRUCTIONS FOR BURNERS

- The burner should be installed in a suitable room, with ventilation openings complying with the requirements of the regulations in force, and sufficient for good combustion.
- Only burners designed according to the regulations in force should be used.
- This burner should be employed exclusively for the use for which it was designed.
- Before connecting the burner, make sure that the unit rating is the same as delivery mains (electricity, gas oil, or other fuel).
- Observe caution with hot burner components. These are, usually, near to the flame and the fuel pre-heating system, they become hot during the unit operation and will remain hot for some time after the burner has stopped.

When the decision is made to discontinue the use of the burner, the user shall have qualified personnel carry out the following operations:

a Remove the power supply by disconnecting the power cord from the mains.

b) Disconnect the fuel supply by means of the hand-operated shut-off valve and remove the control handwheels from their spindles.

**Special warnings**

- Make sure that the burner has, on installation, been firmly secured to the appliance, so that the flame is generated inside the appliance firebox.
- Before the burner is started and, thereafter, at least once a year, have qualified personnel perform the following operations:

a set the burner fuel flow rate depending on the heat input of the appliance;

b set the flow rate of the combustion-supporting air to obtain a combustion efficiency level at least equal to the lower level required by the regulations in force;

c check the unit operation for proper combustion, to avoid any harmful or polluting unburnt gases in excess of the limits permitted by the regulations in force;

d make sure that control and safety devices are operating properly;

e make sure that exhaust ducts intended to discharge the products of combustion are operating properly;

f on completion of setting and adjustment operations, make sure that all mechanical locking devices of controls have been duly tightened;

g make sure that a copy of the burner use and maintenance instructions is available in the boiler room.

- In case of a burner shut-down, reser the control box by means of the RESET pushbutton. If a second shut-down takes place, call the Technical Service, **without trying to RESET further**.
- The unit shall be operated and serviced by qualified personnel only, in compliance with the regulations in force.

### 3) GENERAL INSTRUCTIONS DEPENDING ON FUEL USED

### 3a) ELECTRICAL CONNECTION

- For safety reasons the unit must be efficiently earthed and installed as required by current safety regulations.
- It is vital that all saftey requirements are met. In case of any doubt, ask for an accurate inspection of electrics by qualified personnel, since the manufacturer cannot be held liable for damages that may be caused by failure to correctly earth the equipment.
- Qualified personnel must inspect the system to make sure that it is adequate to take the maximum power used by the equipment shown on the equipment rating plate. In particular, make sure that the system cable cross section is adequate for the power absorbed by the unit.
- No adaptors, multiple outlet sockets and/or extension cables are permitted to connect the unit to the electric mains.
- An omnipolar switch shall be provided for connection to mains, as required by the current safety regulations.
- The use of any power-operated component implies observance of a few basic rules, for example:
  - do not touch the unit with wet or damp parts of the body and/or with bare feet;
  - do not pull electric cables;

- do not leave the equipment exposed to weather (rain, sun, etc.) unless expressly required to do so;
- do not allow children or inexperienced persons to use equipment;

- The unit input cable shall not be replaced by the user.

In case of damage to the cable, switch off the unit and contact qualified personnel to replace.

When the unit is out of use for some time the electric switch supplying all the power-driven components in the system (i.e. pumps, burner, etc.) should be switched off.

### 3b) FIRING WITH GAS, LIGHT OIL OR OTHER FUELS

### GENERAL

- The burner shall be installed by qualified personnel and in compliance with regulations and provisions in force; wrong installation can cause injuries to people and animals, or damage to property, for which the manufacturer cannot be held liable.
- Before installation, it is recommended that all the fuel supply system pipes be carefully cleaned inside, to remove foreign matter that might impair the burner operation.
- Before the burner is commissioned, qualified personnel should inspect the following:

a the fuel supply system, for proper sealing;
b the fuel flow rate, to make sure that it has been set based on the firing rate required of the burner;
c the burner firing system, to make sure that it is supplied for the designed fuel type;
d the fuel supply pressure, to make sure that it is included in the range shown on the rating plate;
e the fuel supply system, to make sure that the system dimensions are adequate to the burner firing rate, and that the system is equipped with all the safety and control devices required by the regulations in force.

- When the burner is to remain idle for some time, the fuel supply tap or taps should be closed.

### SPECIAL INSTRUCTIONS FOR USING GAS

Have qualified personnel inspect the installation to ensure that:

a the gas delivery line and train are in compliance with the regulations and provisions in force;
b all gas connections are tight;
c the boiler room ventilation openings are such that they ensure the air supply flow required by the current regulations, and in any case are sufficient for proper combustion.

- Do not use gas pipes to earth electrical equipment.
- Never leave the burner connected when not in use. Always shut the gas valve off.
- In case of prolonged absence of the user, the main gas delivery valve to the burner should be shut off.

**Precautions if you can smell gas**

a do not operate electric switches, the telephone, or any other item likely to generate sparks;
b immediately open doors and windows to create an air flow to purge the room;
c close the gas valves;
d contact qualified personnel.

- Do not obstruct the ventilation openings of the room where gas appliances are installed, to avoid dangerous conditions such as the development of toxic or explosive mixtures.

### DIRECTIVES AND STANDARDS

***Gas burners***

**European directives:**

- Directive 2009/142/EC - Gas Appliances;
- Directive 2006/95/EC on low voltage;
- Directive 2004/108/EC on electromagnetic compatibility

**Harmonised standards :**

-UNI EN 676 (Gas Burners;-EN 55014-1Electromagnetic compatibility - Requirements for household appliances, electric tools and similar apparatus.

-CEI EN 60335-1(Household and similar electrical appliances - Safety. Part 1: General requirements;

-EN 50165 (Electrical equipment of non-electric appliances for household and similar purposes. Safety requirements.

-EN 60335-2-102 (Household and similar electrical appliances. Safety. Particular requirements for gas, oil and solid-fuel burning appliances having electrical connections)

***Light oil burners***

**European directives:**

- Directive 2006/95/EC on low voltage;
- Directive 2004/108/EC on electromagnetic compatibility

**Harmonised standards :**

-CEI EN 60335-1(Household and similar electrical appliances - Safety. Part 1: General requirements;

-UNI 267 Automatic forced draught burners for liquid fuels

-EN 55014-1Electromagnetic compatibility - Requirements for household appliances, electric tools and similar apparatus.

-EN 50165 (Electrical equipment of non-electric appliances for household and similar purposes. Safety requirements.

**National standards :**

-UNI 7824: Monobloc nebulizer burners for liquid fuels. Characteristics and test methods

***Heavy oil burners***

**European directives:**

- Directive 2006/95/EC on low voltage;
- Directive 2004/108/EC on electromagnetic compatibility

**Harmonised standards :**

-CEI EN 60335-1 Household and similar electrical appliances - SafetyPart 1: General requirements;

-EN 55014-1Electromagnetic compatibility - Requirements for household appliances, electric tools and similar apparatus.

- EN 50165 Electrical equipment of non-electric appliances for household and similar purposes. Safety requirements.

**National standards :**

-UNI 7824: Monobloc nebulizer burners for liquid fuels. Characteristics and test methods

***Gas - Light oil burners***

**European directives:**

- Directive 2009/142/EC - Gas Appliances;
- Directive 2006/95/EC on low voltage;
- Directive 2004/108/EC on electromagnetic compatibility

**Harmonised standards :**

-UNI EN 676 Gas Burners

-EN 55014-1Electromagnetic compatibility - Requirements for household appliances, electric tools and similar apparatus.

-UNI 267 Automatic forced draught burners for liquid fuels

-CEI EN 60335-1(Household and similar electrical appliances - Safety. Part 1: General requirements;

- EN 50165 Electrical equipment of non-electric appliances for household and similar purposes. Safety requirements.

**National standards :**

-UNI 7824: Monobloc nebulizer burners for liquid fuels. Characteristics and test methods

***Gas - Heavy oil burners***

**European directives:**

- Directive 2009/142/EC - Gas Appliances;
- Directive 2006/95/EC on low voltage;
- Directive 2004/108/EC on electromagnetic compatibility

**Harmonised standards :**

-EN 55014-1Electromagnetic compatibility - Requirements for household appliances, electric tools and similar apparatus.

-UNI EN 676 (Gas Burners;

-CEI EN 60335-1(Household and similar electrical appliances - Safety. Part 1: General requirements;

- EN 50165 Electrical equipment of non-electric appliances for household and similar purposes. Safety requirements.

**National standards :**

-UNI 7824: Monobloc nebulizer burners for liquid fuels. Characteristics and test methods

***Industrial burners***

**European directives:**

- Directive 2009/142/EC - Gas Appliances;
- Directive 2006/95/EC on low voltage;
- Directive 2004/108/EC on electromagnetic compatibility

**Harmonised standards :**

-EN 55014-1Electromagnetic compatibility - Requirements for household appliances, electric tools and similar apparatus.

-EN 50165 Electrical equipment of non-electric appliances for household and similar purposes. Safety requirements.

-UNI EN 746-2: Industrial thermoprocessing equipment

## Burner data plate

For the following information, please refer to the data plate:

- burner type and burner model: must be reported in any communication with the supplier
- burner ID (serial number): must be reported in any communication with the supplier
- date of production (year and month)
- information about fuel type and network pressure

| | |
|---|---|
| Type | -- |
| Model | -- |
| Year | -- |
| S.Number | -- |
| Output | -- |
| Oil Flow | -- |
| Fuel | -- |
| Category | -- |
| Gas Pressure | -- |
| Viscosity | -- |
| El.Supply | -- |
| El.Consump. | -- |
| Fan Motor | -- |
| Protection | -- |
| Drwaing n° | -- |
| P.I.N. | -- |

**SYMBOLS USED**

***WARNING!***

Failure to observe the warning may result in irreparable damage to the unit or damage to the environment

***DANGER!***

Failure to observe the warning may result in serious injuries or death.

***WARNING!***

Failure to observe the warning may result in electric shock with lethal consequences

## MICROPROCESSOR CONTROLLED SYSTEM

The control system is made of the Siemens LMV central unit that performs all the burner control functions and of the Siemens AZL local programming unit that interfaces the system with the user.

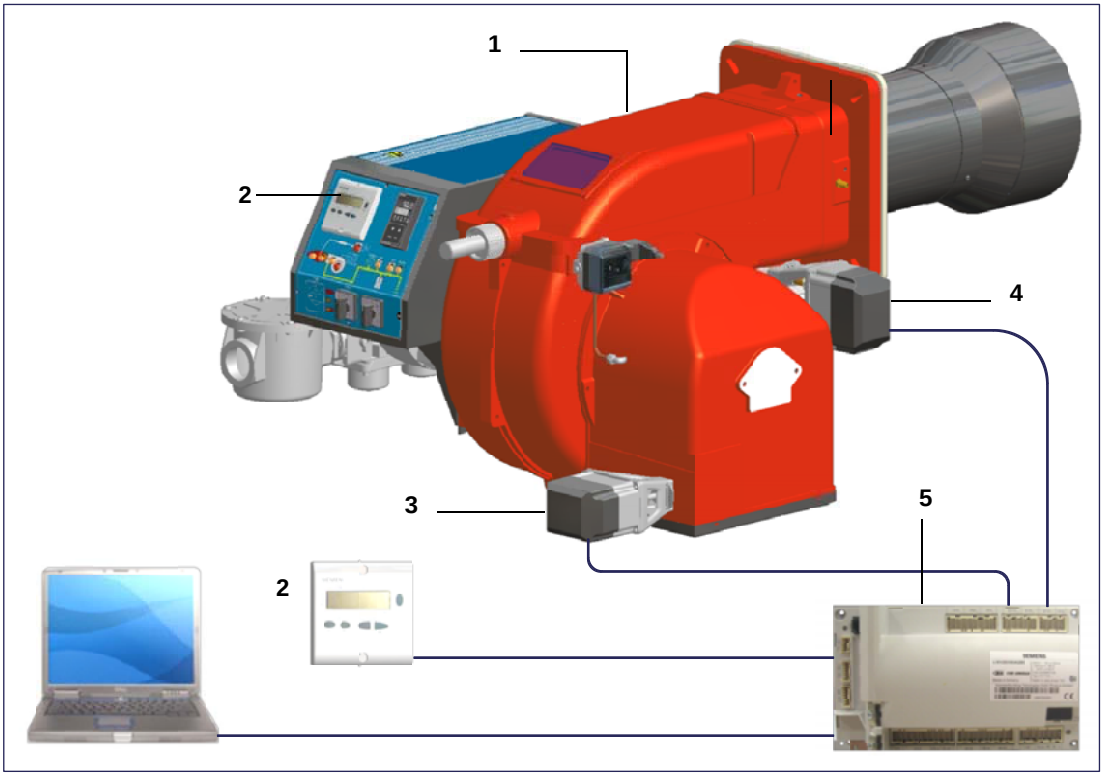


**Keys**

1 Burner
2 AZL2..
3 Air actuator
4 Fuel actuator
5 LMV2..

### *User interface*

The AZL2x.. display/programming unit is shown below:

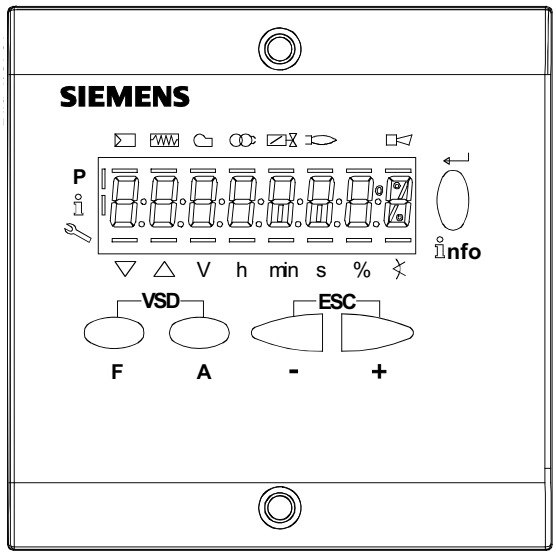

The keys functions are the following:

**Key F**

Used to adjust the “fuel” actuator position (**F**uel): :

While pressing the **F** key, the “fuel” actuator position can be changed by means of the **+** and **-** keys.

**Key A**

Used to adjust the “air” actuator position (**A**ir):

While pressing the **A** key, the “air” actuator position can be changed by means of the **+** and **-** keys.

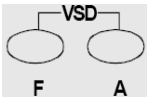


**Key F + A**

While pressing the two keys contemporarly, the **code** message will appear: by entering the proper password it is possible to access the **Service** mode.

**Info and Enter keys**

Used for **Info** and **Service** menues

Used as **Enter** key in the setting modes

Used as **Reset** key in the burner operation mode

Used to enter a lower level menu

**-Key -**

Used to decrease a a value

Used to enter Info and Serivce during the curve adjustments

**+Key +**

Used to increase a a value

Used to enter Info and Serivce during the curve adjustments

**Keys (+ & - )= ESC**

By pressing + and - at the same time, the ESCAPE function is perfomed:

to enter a lower level menu

The display will show these data:

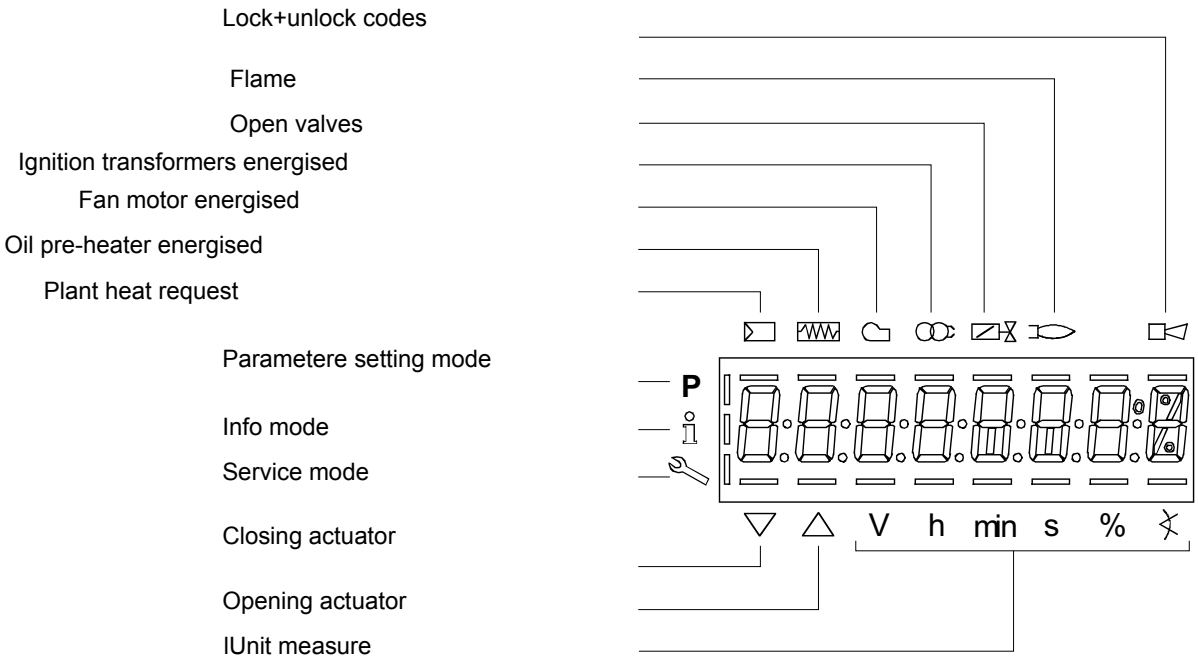

***Parameters level (heating engineer)***

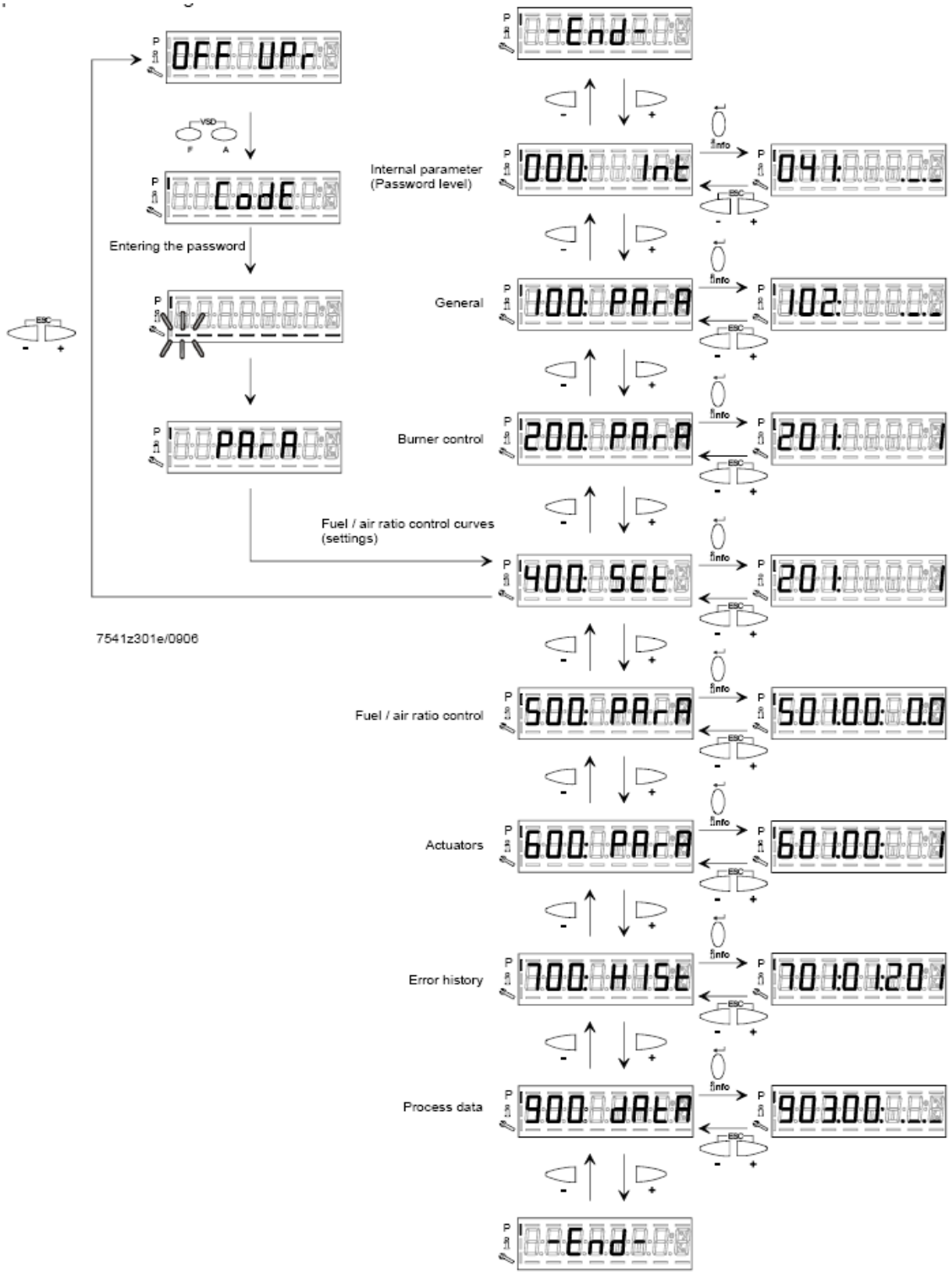


7541z301e/0906

### *Setting menu*

The seeting menu is divided into different blocks:

| Bloc. | Descrizione | Description | Password |
|---|---|---|---|
| 000 | | Internal parameters | OEM / Service |
| 100 | Informazioni generali | General | OEM / Service / Info |
| 200 | Controllo bruciatore | Burner control | OEM / Service |
| 300 | Controllo bruciatore (solo **LMV26**) | Burner control (**LMV26** only) | OEM / Service |
| 400 | Curve rapporto | Ratio curves | OEM / Service |
| 500 | Controllo rapporto | Ratio control | OEM / Service |
| 600 | Servocomandi | Actuators | OEM / Service |
| 700 | Storico errori | Error history | OEM / Service / Info |
| 900 | Dati di processo | Process data | OEM / Service / Info |

The access to the various blocks is allowed by passwords. Passwords are divided into three levels:

- User level (info): no password needed
- Service level (Service)
- Manifacturer level (OEM)

### *Block 000: Internal Parameter*

| Param. | Descrizione | Description | Password |
|---|---|---|---|
| 041 | Password livello assistenza (ingegnere del calore) | Password heating engineer (4 characters) | OEM |
| 042 | Password livello OEM (costruttore del bruciatore) | Password OEM (5 characters) | OEM |
| 050 | Start backup/restore via AZL2x/PC | Start backup / restore via AZL2.../ PC software (set parameter to 1) Index 0: Create backup Index 1: Execute restore Error diagnostics via negative values (see error code 137) | SO |
| 055 | Identificazione bruciatore (backup dati) | Burner identification of AZL2... backup data set | SO |
| 056 | | ASN extraction of AZL2... backup data set | SO |
| 057 | Versione software creata dal set dati backup | Software version when creating the AZL2... backup data set | Service / Info |

### *Block 100: General information*

| Param. | Descrizione | Description | Password | LMV20 LMV27 | LMV26 | LMV37 |
|---|---|---|---|---|---|---|
| 102 | Data produzione (in gg-mm-aa) | Identification date (yy-mm-dd) | Service / Info | x | x | x |
| 103 | Numero identificativ | Identification number | Service / Info | x | x | x |
| 104 | Set di parametri preimpostati: codice cliente | Preselected parameter set: customer code | Service / Info | x | x | x |
| 105 | Set di parametri preimpostati: versione | Preselected parameter set: version | Service / Info | x | x | x |
| 107 | Versione softwar | Software version | Service / Info | x | x | x |
| 108 | Variante software | Software variant | Service / Info | x | x | x |
| 113 | Identificativo bruciatore | Burner identification | Service / Info SO password for writing | x | x | x |
| 121 | Potenza manuale Valore “Undefined = automatico Impostare un valore inferiore a = in modo che il display mostri --- altrimenti, il controllore rimarrà sempre in stand-by e il display mostrerà la scritta OFF lampeggiante. | Manual output Undefined = automatic mode | Service / Info | x | x | x |

| | | | | | | |
|---|---|---|---|---|---|---|
| 125 | Frequenza di rete<br>0 = 50 Hz<br>1 = 60 Hz | Mains frequency<br>0 = 50 Hz<br>1 = 60 Hz | Service / Info | x | x | x |
| 126 | Luminosità display | Display brightness | Service / Info | x | x | x |
| 127 | Tempo dopo il quale, se non viene premuto nessun tast il software esce dalla modalita programmazione (valore fabbrica = 60min - range impostazione: 10 - 120 min) | Timeout for menu operation (default value = 60min - range: 10 - 120 min) | OEM | x | x | x |
| 130 | Azzeramento Storico errori<br>Impostare prima il parametro a 1 e poi a 2;<br>se compare “0” = lo Storico è stato azzerato<br>se compare “-1” = scaduto tempo sequ. 1_2 | Delete display of error history<br>To delete display : set to 1 then to 2;<br>return value “0” = error history deleted<br>return value “-1” = timeout of 1_2 sequence | OEM / Service | x | x | x |
| 141 | Attivazione comunicazione bus<br>0 = off 1 = Modbus 2 = riserva | Operating mode BACS<br>0 = off 1 = Modbus 2 = reserved | OEM / Service | | x | x |
| 142 | Tempo d'arresto in caso di guasto di comunicazione | Setback time in the event of communication breakdown | OEM / Service | | x | x |
| 143 | Riserva | Reserved | Service / Info | | x | x |
| 144 | Riserva | Reserved | OEM / Service | | x | x |
| 145 | Indirizzo dispositivo per Modbus | Device address for Modbus | OEM / Service | | x | x |
| 146 | Velocità di trasmissione per Modbus | Baud rate for Modbus | OEM / Service | | x | x |
| 147 | Parità per Modbus | Parity for Modbus | OEM / Service | | x | x |
| 148 | on una interruzione della comunicazione bus:<br>0 ... 19.9 = bruciatore spento<br>20 ... 100 = 20 ... 100% potenza<br>Per il funzionamento multistadio:<br>0 = bruciatore OFF,<br>P1, P2, P3 non valido = nessun standard di prestazione della LMV. | Performance standard at interruption of communication with building automation For modulation operation the setting range is as fol-lows: 0…19.9 = burner off 20…100 = 20…100% burner rating For multistage operation apply to setting range: 0 = burner OFF, P1, P2, P3 Invalid = no performance standards of the building auto-mation | OEM / Service | | x | x |
| 161 | Numero di avarie | Number of faults | Service / Info | x | x | x |
| 162 | Ore di esercizio (azzerabile da Service) | Operating hours (resettable by Service) | Service / Info | x | x | x |
| 163 | Ore di esercizio (con dispositivo sotto tensione) | Operating hours (when unit is live) | Service / Info | x | x | x |
| 164 | Numero di partenze (azzerabile da Service) | Number of startups (resettable by Service) | Service / Info | x | x | x |
| 165 | Numero di partenze | Number of startups | Service / Info | x | x | x |

| | | | | | | |
|---|---|---|---|---|---|---|
| 166 | Numero totale di partenze (non azzerabile) | Total number of startups | Service / Info | x | x | x |
| 167 | Volume combustibile (azzerabile da OEM) | Fuel volume (resettable by OEM) | Service / Info | x | x | x |
| 172 | Fuel 1(secondo combustibile)Ore di esercizio (azzerabile da Service) | Fuel 1: Operation hours resettable | Service / Info | | x | |
| 174 | Fuel 1 (secondo combustibile) Numero di partenze (azzerabile da Service) | Fuel 1: Number of startups resettable | Service / Info | | x | |
| 175 | Fuel 1 (secondo combustibile) Numero di partenze | Fuel 1: Number of startups | Service / Info | | x | |
| 177 | Fuel 1 (secondo combustibile) Volume combustibile (azzerabile da OEM) | Fuel 1: Fuel volume resettable ($m^3$, l, $ft^3$, gal) | Service / Info | | x | |

***Block 200: Burner control***

| Param. | Descrizione | Description | Password | LMV20 LMV27 | LMV26 | LMV37 |
|---|---|---|---|---|---|---|
| 201 | Modalità funzionamento bruciatore ( rampa combustibile, modulante / multistadio, servo-comandi, ecc.)<br>__= non definito (cancellazione curve)<br>**1** = accensione diretta a gas (G mod)<br>**2** = accensione tramite pilota gas con attacco tra le due elettrovalvole EV1/EV2 del gas (Gp1 mod)<br>**3** = accensione tramite pilota gas con attacco a monte dell'elettrovalvola EV1 del gas (Gp2 mod)<br>**4** = accensione a gasolio - modulante (Lo mod)<br>**5** = accensione a gasolio - bistadio (Lo 2 stage)<br>**6** = accensione a gasolio - tristadio (Lo 3 stage)<br>**7** = accensione diretta a gas - regolazione pneumatica (G mod pneu)<br>**8** = accensione tramite pilota gas con attacco tra le due elettrovalvole EV1/EV2 del gas - regolazione pneumatica (Gp1 mod pneu)<br>**9** = accensione tramite pilota gas con attacco a monte dell'elettrovalvola EV1 del gas - regolazione pneumatica (Gp2 mod pneu) | Burner operating mode (fuel train, modulating / multistage, actuators, etc..)<br>__= undefined (delete curves)<br>**1** = gas direct ignition (G mod)<br>**2** = ignition by gas pilot connected between the two gas solenoid valves EV1/EV2 (Gp1 mod)<br>**3** = ignition by gas pilot connected upstream the gas EV1 (Gp2 mod)<br>**4** = light oil ignition - modulating (Lo mod)<br>**5** = light oil ignition - double stage (Lo 2 stage)<br>**6** = light oil ignition - three stage (Lo 3 stage)<br>**7** = gas direct ignition - pneumatic regulation (G mod pneu)<br>**8** = ignition by gas pilot connected between the two gas solenoid valves EV1/EV2 - pneumatic regulation (Gp1 mod pneu)<br>**9** = ignition by gas pilot connected upstream the gas EV1 - pneumatic regulation (Gp2 mod pneu) | OEM / Service | x | x | x |
| | **10** = olio modulante con accensione tramite pilota (LOGp mod)<br>**11** = olio 2 stadi con accensione tramite pilota (LOGp 2-stage)<br>**12** = olio modulante con 2 valvole combustibile (LOmod 2 valvole)<br>**13** = olio modulante con 2 valvole combustibile e con accensione tramite pilota (LOGp 2 valvole)<br>**14** = gas modulante pneumatico senza servomotori (Gmod pneu) | **10** = LoGp mod<br>**11** = LoGp 2-stage<br>**12** = Lo mod 2 fuel valves<br>**13** = LoGp mod 2 fuel valves<br>**14** = G mod pneu without actuator | | | | |

| | | | | | | |
|---|---|---|---|---|---|---|
| | **15** = gas rampa Gp1 modulante pneumatico senza servomotori (Gp1 mod pneu)<br>**16** = gas rampa Gp2 modulante pneumatico senza servomotori (Gp2 mod pneu)<br>**17** = olio LO 2 stadi senza servomotori<br>**18** = olio LO 3 stadi senza servomotori<br>**19** = gas Gmod con solo servomotore gas<br>**20** = gas Gp1 mod con solo servomotore gas<br>**21** = gas Gp2 mod con solo servomotore gas<br>**22** = olio LO mod con solo servomotore olio | **15** = Gp1 mod pneu without actuator<br>**16** = Gp2 mod pneu without actuator<br>**17** = Lo 2-stage without actuator<br>**18** = Lo 3-stage without actuator<br>**19** = G mod gas actuator only<br>**20** = Gp1 mod gas actuator only<br>**21** = Gp2 mod gas actuator only<br>**22** = Lo mod oil actuator only | | | | |
| 208 | Stop programma<br>**0** = non attivo<br>**1** = posizione preventilazione (Ph24 - fase 24 del programma)<br>**2** = posizione accensione (Ph36 - fase 36 del programma)<br>**3** = intervallo di tempo 1 (Ph44 - fase 44 del programma)<br>**4** = intervallo di tempo 2 (Ph52 - fase 52 del programma) | Program stop<br>**0** = deactivated<br>**1** = pre-purge position (Ph24 - program phase 24)<br>**2** = ignition position (Ph36 - program phase 36)<br>**3** = interval 1 (Ph44 - program phase 44)<br>**4** = interval 2 (Ph52 - program phase 52) | OEM / Service | x | x | x |
| 210 | Allarme impedimento avviamento<br>**0** = non attivo<br>**1** = attivo | Alarm in the event of start prevention<br>**0** = deactivated<br>**1** = activated | OEM / Service | x | x | x |
| 211 | Tempo aumento giri ventilatore (valore fabbrica = 2s - range impostazione: 2 - 60 s) | Fan ramp up time (default value = 2s - range: 2 - 60 s) | OEM / Service | x | x | x |
| 212 | Tempo massimo raggiungimento bassa fiamma (valore fabbrica = 45 s - range impostazione: 0.2 s - 10 min)<br>Stabilisce il massimo intervallo di tempo durante il quale il bruciatore raggiunge la minima potenza e poi si spegne | Maximum time down to low-fire (default value = 45 s - range: 0.2 s - 10 min)<br>It states the maximum time interval during which the burner drives to the low output and then turns off | OEM / Service | | x | |
| 213 | Tempo minimo raggiungimento posizione di stand by (valore fabbrica = 2 s - range impostazione: 2 - 60 s) | Min. time home run (default value = 2 s - range: 2 - 60 s) | OEM | x | x | x |
| 214 | Tempo massimo inizio partenza | Max. time start release | OEM | x | x | x |
| 215 | Limite ripetizioni catena di sicurezza (valore fabbrica = 16 - range impostazione:1 - 16) | Repetition limit safety loop (default value = 16 - range: 1 - 16) | OEM / Service | x | x | x |
| 217 | Tempo massimo per rilevazione segnale (valore fabbrica = 30s - range impostazione: 5s - 10 min) | Max. time to detector signal (default value = 30s - range: 5s - 10 min) | OEM | x | x | x |

| | | | | | | |
|---|---|---|---|---|---|---|
| 221 | Gas: sonda rilevazione fiamma attivo (valore fabbrica = 1) | Gas: active detector flame evaluation (default value = 1)<br>**0** = QRB../QRC..<br>**1** = ION / QRA.. | OEM / Service | x | x | x |
| 222 | Gas: Preventilazione (valore fabbrica = 1)<br>**1** = attivo<br>**0** = non attivo<br>ATTENZIONE : In ambito civile la norma EN676 rende obbligatoria la preventilazione. In ambito industriale, vedere i casi in cui la norma EN746-2 prevede la possibilità di non fare la preventilazione.<br>In questi ultimi casi il bruciatore deve essere costruito obbligatoriamente con controllo di tenuta e valvole gas in classe A | Gas: Pre-purging (default value = 1)<br>**1** = active<br>**0** = deactivated<br>WARNING: in the civil field, the prepurge is mandatory according to the standard EN676. In the industrial fiels, check if the pre purge can be avoided according to the stanrds EN746-2<br>If the prepurge is not performed, the burner must be equipped with two valves and the proving system. | OEM / Service | x | x | x |
| 223 | Limite ripetizioni pressostato gas di minima pressione (valore fabbrica = 16 - range impostazione:1 - 16) | Repetition limit pressure switch-min-gas (default value = 16 - range:1 - 16) | OEM / Service | x | x | x |
| 225 | Gas: tempo di preventilazione (valore fabbrica = 20s - range impostazione:20s - 60min) | Gas: Prepurge time (default value = 20s - range:20s - 60min) | OEM / Service | x | x | x |
| 226 | Gas: tempo di preaccensione (valore fabbrica = 2s - range impostazione:0.2s - 60min) | Gas: Preignition time (default value = 2s - range: 0.2s - 60min) | OEM / Service | x | x | x |
| 227 | Gas: tempo di sicurezza 1 (TSA1) (valore fabbrica = 3s - range impostazione:0.2 - 10s) | Gas: Safety time 1 (TSA1) (default value = 3s - range: 0.2 - 10s) | OEM | x | x | x |
| 229 | Gas: tempo di risposta a cadute di pressione entro TSA1 e TSA2 (valore fabbrica = 1.8s - range impostazione:0.2s - 9.8s) | Gas: time to respond to pressure faults in TSA1 e TSA2 (default value = 1.8s - range: 0.2s - 9.8s) | OEM | x | x | x |
| 230 | Gas: Intervallo 1 (valore fabbrica = 2s - range impostazione:0.2s - 60min) | Gas: Interval 1 (default value = 2s - range: 0.2s - 60min) | OEM / Service | x | x | x |
| 231 | Gas: tempo di sicurezza 2 (TSA2) (valore fabbrica = 3s - range impostazione:0.2 - 10s) | Gas: Safety time 2 (TSA2) (default value = 3s - range:0.2 - 10s) | OEM | x | x | x |
| 232 | Gas: Intervallo 2 (valore fabbrica = 2s - range impostazione:0.2s - 60min) | Gas: Interval 2 (default value = 2s - range:0.2s - 60min) | OEM / Service | x | x | |
| 233 | Gas: Tempo postcombustione (valore fabbrica = 8s - range impostazione:0.2s - 60s) | Gas: postcombustion time (default value = 8s - range:0.2s - 60s) | OEM / Service | x | x | x |
| 234 | Gas: Tempo postventilazione (valore fabbrica = 0.2s - range impostazione:0.2s - 180min) | Gas: Postpurge time (default value = 0.2s - range:0.2s - 180min) | OEM / Service | x | x | x |

| | | | | | | |
|---|---|---|---|---|---|---|
| 236 | Gas: Pressostato gas di minima (default = 1)<br>0 = inattivo<br>1 = pressostato gas di minima (a monte valvola V1)<br>2 = controllo perditavalvole via pressostato (montato tra le valvole V1 e V2) | Gas: Pressure switch-min input<br>0 = inactive<br>1 = pressure switch-min (upstream of fuel valve 1 (V1))<br>2 = valve proving via pressure switch-min (between fuel valves 1 (V1) and 2 (V2)) | OEM / Service | x | x | |
| 237 | Gas: Pressostato gas di massima / ingresso-POC<br>0 = inattivo<br>1= pressostato gas di massima<br>2= POC<br>3 = pressostato controllo perdite | Gas: Pressure switch-max / POC input<br>0 = inactive 1 = pressure switch-max<br>2 = POC<br>3 = pressure switch valve proving | | | x | x |
| 239 | Gas: Forzatura al funzionamento intermittente<br>0 = disattivato<br>1 = attivato<br>Attenzione : di default questo parametro è attivo = (1); esso è modificabile solo su LMV37. Dal punto di vista della sicurezza, il funzionamento continuo è valido esclusivamente per bruciatori di gas con elettrodo di rilevazione. | Gas: Forced intermittent operation 0 = deactivated 1 = activated | OEM | | | x |
| 240 | Limite ripetizioni perdita di fiamma (valore fabbrica = 2 - range impostazione:1 - 2) | Repetition limit loss of flame (default value= 2 - range:1 - 2) | OEM | x | x | x |
| 241 | Gas: esecuzione controllo tenuta (valore fabbrica = 2)<br>**0** = no controllo tenuta<br>**1** = controllo tenuta in avviamento<br>**2** = controllo tenuta in arresto<br>**3** = controllo tenuta in arresto e in avviamento | Gas: execution proving test (default value= 2)<br>**0** = no proving test<br>**1** = proving test on startup<br>**2** = proving test on shutdown<br>**3** = proving test on shutdown and on startup | OEM / Service | x | x | x |
| 242 | Gas: tempo evacuazione controllo tenuta (valore fabbrica = 3s - range impostazione:0.2s - 10s) | Gas: proving test evacuation time (default value = 3s - range:0.2s - 10s) | OEM | x | x | x |

| | | | | | | |
|---|---|---|---|---|---|---|
| 243 | Gas: tempo pressione atmosferica controllo tenuta (valore fabbrica = 10s - range impostazione:0.2s - 60s) | Gas: proving test time atmospheric pressure (default value = 10s - range:0.2s - 60s) | OEM | x | x | x |
| 244 | Gas: tempo riempimento controllo tenuta (valore fabbrica = 3s - range impostazione:0.2s - 10s) | Gas: proving test filling time (default value = 3s - range:0.2s - 10s) | OEM | x | x | x |
| 245 | Gas: tempo test pressione gas (valore fabbrica = 10s - range impostazione:0.2s - 60s) | Gas: proving test time gas pressure (default value = 10s - range:0.2s - 60s) | OEM | x | x | x |
| 246 | Gas: tempo attesa consenso pressostato di minima (valore fabbrica = 10s - range impostazione:0.2s - 60s)<br>Se la pressione del gas è troppo bassa, in fase 22 non verrà eseguito l'avviamento: il sistema compie un numero impostabile di tentativi finché non si arriva al blocco. Il tempo di attesa tra un tentativo e il successivo viene raddoppiato ad ogni tentativo. | Gas: waiting time gas shortage (default value = 10s - range:0.2s - 60s)<br>If the gas pressure is too low, in phase 22 the startup will not be performed: the system tries for a certain number of times the it locks out. The time interval between two attempts is doubled at each attempt. | OEM | x | x | x |
| 248 | Gas: Tempo di post-ventilazione 3 (abortito con regolatore di potenza (LR)-ON | Gas: Postpurge time 3 (abortion with load controller (LR)-ON | OEM / Service | x | x | x |
| 261 | Olio: sonda rilevazione fiamma attivo (valore fabbrica = 0)<br>**0** = QRB../QRC..<br>**1** = ION / QRA.. | Oil: active detector flame evaluation (default value = 0)<br>**0** = QRB../QRC..<br>**1** = ION / QRA.. | OEM / Service | x | x | x |
| 262 | Olio: preventilazione (valore fabbrica = 1)<br>**1** = attivo<br>**0** = non attivo<br>In ambito civile la norma EN267 rende obbligatoria la preventilazione. In ambito industriale, vedere i casi in cui la norma EN746-2 prevede la possibilità di non fare la preventilazione. | Oil: prepurging (default value = 1)<br>**0** = deactivated<br>**1** = activated<br>**0** = deactivated<br>WARNING: in the civil field, the prepurge is mandatory according to the standard EN267. In the industrial fiels, check if the pre purge can be avoided according to the standard EN746-2 | OEM / Service | x | x | x |
| 265 | Olio: tempo preventilazione (valore fabbrica = 15s - range impostazione:15s - 60min) | Oil: prepurging time (default value = 15s - range:15s - 60min) | OEM / Service | x | x | x |
| 266 | Olio: tempo preaccensione (valore fabbrica = 2s - range impostazione:0.2s - 60min) | Oil: preignition time (default value = 2s - range:0.2s - 60min) | OEM / Service | x | x | x |
| 267 | Olio: tempo di sicurezza 1 (TSA1) (valore fabbrica = 5s - range impostazione:0.2 - 15s) | Oil: safety time 1 (TSA1) (default value = 5s - range:0.2 - 15s) | OEM | x | x | x |
| 269 | Olio: tempo di risposta a cadute di pressione entro TSA1 e TSA2 (valore fabbrica = 1.8s - range impostazione:0.2s - 14.8s) | Oil: time to respond to pressure faults in TSA1 and TSA2 (default value = 1.8s - range:0.2s - 14.8s) | OEM | x | x | x |

| | | | | | | |
|---|---|---|---|---|---|---|
| 270 | Olio: Intervallo 1 (valore fabbrica = 2s - range impostazione:0.2s - 60min) | Oil: Interval 1 (default value = 2s - range:0.2s - 60min) | OEM / Service | x | x | x |
| 271 | Olio: tempo di sicurezza 2 (TSA2) (valore fabbrica = 3s - range impostazione:0.2 - 10s) | Oil: safety time 2 (TSA2) (default value = 3s - range:0.2 - 10s) | OEM | x | x | x |
| 272 | Olio: Intervallo 2 (valore fabbrica = 2s - range impostazione:0.2s - 60min) | Oil: Interval 2 (default value = 2s - range:0.2s - 60min) | OEM / Service | x | x | x |
| 273 | Olio: Tempo postcombustione (valore fabbrica = 8s - range impostazione:0.2s - 60s) | Oil: Postcombustion time (default value = 8s - range:0.2s - 60s) | OEM / Service | x | x | x |
| 274 | Olio: Tempo postventilazione (valore fabbrica = 0.2s - range impostazione:0.2s - 180min) | Oil: Postpurging time (default value = 0.2s - range:0.2s - 180min) | OEM / Service | x | x | x |
| 276 | Olio : Pressostato olio di minima (default = 1)<br>0 = inattivo<br>1 = attivo dalla fase 38<br>2 = attivo dal tempo di sicurezza (TSA) | Oil. Pressure switch-min input<br>0 = inactive<br>1 = active from phase 38<br>2 = active from safety time (TSA) | OEM / Service | x | x | |
| 277 | Olio: Pressostato olio di massima / ingresso-POC<br>0 = inattivo<br>1= pressostato olio di massima<br>2= POC | Oil: Pressure switch-max/POC input<br>0 = inactive<br>1 = pressure switch-max<br>2 = POC | | | x | |
| 279 | Olio: Forzatura al funzionamento intermittente<br>0 = disattivato<br>1 = attivato<br>Attenzione : di default questo parametro è attivo = (1); esso è modificabile solo su LMV37.. | Oil: Forced intermittent operation 0 = deactivated 1 = activated | OEM | | x | x |
| 280 | Limite ripetizioni perdita di fiamma (valore fabbrica = 2 - range impostazione:1 - 2) | Repetition limit value loss of flame (default value = 2 - range:1 - 2) | OEM | x | x | x |
| 281 | Olio: tempo iniezione olio (valore fabbr. = 1)<br>**0** = preaccensione corta (Ph38 - fase programma 38)<br>**1** = preaccensione lunga (con ventilatore) (Ph22 - fase programma 22) | Oil: time oil ignition (default value = 1)<br>**0** = short preignition (Ph38-progr. phase 38)<br>**1** = long preignition (with fan) (Ph22 - program phase 22) | OEM / Service | x | x | x |
| 284 | Olio: Tempo di post-ventilazione 3 (abortito con regolatore di potenza (LR)-ON | Oil: Postpurge time 3 (abortion with load controller (LR)-ON | OEM / Service | x | x | x |

***Block 300: Burner control (only with LMV26)***

| Param. | Descrizione | Description | Password | LMV20 LMV27 | LMV26 | LMV37 |
|---|---|---|---|---|---|---|
| 301 | Combustibile 1 : Modalità funzionamento bruciatore ( rampa combustibile, modulante / multistadio, servocomandi, ecc.)<br>__= non definito (cancellazione curve)<br>**1** = accensione diretta a gas (G mod)<br>**2** = accensione tramite pilota gas con attacco tra le due elettrovalvole EV1/EV2 del gas (Gp1 mod)<br>**3** = accensione tramite pilota gas con attacco a monte dell'elettrovalvola EV1 del gas (Gp2 mod)<br>**4** = accensione a gasolio - modulante (Lo mod)<br>**5** = accensione a gasolio - bistadio (Lo 2 stage)<br>**6** = accensione a gasolio - tristadio (Lo 3 stage)<br>**7** = accensione diretta a gas - regolazione pneumatica (G mod pneu)<br>**8** = accensione tramite pilota gas con attacco tra le due elettrovalvole EV1/EV2 del gas - regolazione pneumatica (Gp1 mod pneu)<br>**9** = accensione tramite pilota gas con attacco a monte dell'elettrovalvola EV1 del gas - regolazione pneumatica (Gp2 mod pneu)<br>**10** = olio modulante con accensione tramite pilota (LOGp mod) | Fuel 1 : Burner operating mode (fuel train, modulating / multistage, actuators, etc..)<br>__= undefined (delete curves)<br>**1** = gas direct ignition (G mod)<br>**2** = ignition by gas pilot connected between the two gas solenoid valves EV1/EV2 (Gp1 mod)<br>**3** = ignition by gas pilot connected upstream the gas EV1 (Gp2 mod)<br>**4** = light oil ignition - modulating (Lo mod)<br>**5** = light oil ignition - double stage (Lo 2 stage)<br>**6** = light oil ignition - three stage (Lo 3 stage)<br>**7** = gas direct ignition - pneumatic regulation (G mod pneu)<br>**8** = ignition by gas pilot connected between the two gas solenoid valves EV1/EV2 - pneumatic regulation (Gp1 mod pneu)<br>**9** = ignition by gas pilot connected upstream the gas EV1 - pneumatic regulation (Gp2 mod pneu)<br>**10** = LoGp mod | OEM / Service | | x | |

| | | | | | | |
|---|---|---|---|---|---|---|
| | **11** = olio 2 stadi con accensione tramite pilota (LOGp 2-stage)<br>**12** = olio modulante con 2 valvole combustibile (LOmod 2 valvole)<br>**13** = olio modulante con 2 valvole combustibile e con accensione tramite pilota (LOGp 2 valvole)<br>**14** = gas modulante pneumatico senza servomotori (Gmod pneu)<br>**15** = gas rampa Gp1 modulante pneumatico senza servomotori (Gp1 mod pneu)<br>**16** = gas rampa Gp2 modulante pneumatico senza servomotori (Gp2 mod pneu) | **11** = LoGp 2-stage<br>**12** = Lo mod 2 fuel valves<br>**13** = LoGp mod 2 fuel valves<br>**14** = G mod pneu without actuator<br>**15** = Gp1 mod pneu without actuator<br>**16** = Gp2 mod pneu without actuator | | | | |
| | **17** = olio LO 2 stadi senza servomotori<br>**18** = olio LO 3 stadi senza servomotori<br>**19** = gas Gmod con solo servomotore gas<br>**20** = gas Gp1 mod con solo servomotore gas<br>**21** = gas Gp2 mod con solo servomotore gas<br>**22** = olio LO mod con solo servomotore olio | **17** = Lo 2-stage without actuator<br>**18** = Lo 3-stage without actuator<br>**19** = G mod gas actuator only<br>**20** = Gp1 mod gas actuator only<br>**21** = Gp2 mod gas actuator only<br>**22** = Lo mod oil actuator only | | | x | |
| 321 | Combustibile 1 - Gas: sonda rilevazione fiamma attivo (valore fabbrica = 1) -<br>**0** = QRB../QRC..<br>**1** = ION / QRA.. | Fuel 1 - Gas: active detector flame evaluation (default value = 1)<br>**0** = QRB../QRC..<br>**1** = ION / QRA.. | OEM / Service | | x | |
| 322 | Combustibile 1 - Gas: Preventilazione (valore fabbrica = 1)<br>**1** = attivo<br>**0** = non attivo<br>ATTENZIONE : In ambito civile la norma EN676 rende obbligatoria la preventilazione. In ambito industriale, vedere i casi in cui la norma EN746-2 prevede la possibilità di non fare la preventilazione.<br>In questi ultimi casi il bruciatore deve essere costruito obbligatoriamente con controllo di tenuta e valvole gas in classe A. | Fuel 1 - Gas: Pre-purging (default value = 1)<br>**1** = active<br>**0** = deactivated<br>WARNING: in the civil field, the prepurge is mandatory according to the standard EN676. In the industrial fiels, check if the pre purge can be avoided according to the stanrds EN746-2<br>If the prepurge is not performed, the burner must be equipped with two valves and the proving system. | OEM / Service | | x | |
| 323 | Limite ripetizioni pressostato gas di minima pressione (valore fabbrica = 16 - range impostazione:1 - 16) | Repetition limit pressure switch-min-gas (default value = 16 - range:1 - 16) | OEM / Service | | x | |
| 325 | Combustibile 1 - Gas: tempo di preventilazione (valore fabbrica = 20s - range impostazione:20s - 60min) | Fuel 1 - Gas: Prepurge time (default value = 20s - range:20s - 60min) | OEM / Service | | x | |

| | | | | | | |
|---|---|---|---|---|---|---|
| 326 | Combustibile 1 - Gas: tempo di preaccensione (valore fabbrica = 2s - range impostazione:0.2s - 60min) | Fuel 1 - Gas: Preignition time (default value = 2s - range: 0.2s - 60min) | OEM / Service | | x | |
| 327 | Combustibile 1 - Gas: tempo di sicurezza 1 (TSA1) (valore fabbrica = 3s - range impostazione:0.2 - 10s) | Fuel 1 - Gas: Safety time 1 (TSA1) (default value = 3s - range: 0.2 - 10s) | OEM | | x | |
| 329 | Combustibile 1 - Gas: tempo di risposta a cadute di pressione entro TSA1 e TSA2 (valore fabbrica = 1.8s - range impostazione:0.2s - 9.8s) | Fuel 1 - Gas: time to respond to pressure faults in TSA1 e TSA2 (default value = 1.8s - range: 0.2s - 9.8s) | OEM | | x | |
| 330 | Combustibile 1 - Gas: Intervallo 1 (valore fabbrica = 2s - range impostazione:0.2s - 60min) | Fuel 1 - Gas: Interval 1 (default value = 2s - range: 0.2s - 60min) | OEM / Service | | x | |
| 331 | Combustibile 1 - Gas: tempo di sicurezza 2 (TSA2) (valore fabbrica = 3s - range impostazione:0.2 - 10s) | Fuel 1 - Gas: Safety time 2 (TSA2) (default value = 3s - range:0.2 - 10s) | OEM | | x | |
| 332 | Combustibile 1 - Gas: Intervallo 2 (valore fabbrica = 2s - range impostazione:0.2s - 60min) | Fuel 1 - Gas: Interval 2 (default value = 2s - range:0.2s - 60min) | OEM / Service | | x | |
| 333 | Combustibile 1 - Gas: Tempo postcombustione (valore fabbrica = 8s - range impostazione:0.2s - 60s) | Fuel 1 - Gas: postcombustion time (default value = 8s - range:0.2s - 60s) | OEM / Service | | x | |
| 334 | Combustibile 1 - Gas: Tempo postventilazione (valore fabbrica = 0.2s - range impostazione:0.2s - 180min) | Fuel 1 - Gas: Postpurge time (default value = 0.2s - range:0.2s - 180min) | OEM / Service | | x | |
| 336 | Combustibile 1 - Gas: Pressostato gas di minima (default = 1)<br>0 = inattivo<br>1 = pressostato gas di minima (a monte valvola V1)<br>2 = controllo perditavalvole via pressostato (montato tra le valvole V1 e V2) | Fuel 1 - Gas: Pressure switch-min input<br>0 = inactive<br>1 = pressure switch-min (upstream of fuel valve 1 (V1))<br>2 = valve proving via pressure switch-min (between fuel valves 1 (V1) and 2 (V2)) | OEM / Service | | x | |
| 337 | Combustibile 1 - Gas: Pressostato gas di massima / ingressoPOC<br>0 = inattivo<br>1= pressostato gas di massima<br>2= POC<br>3 = pressostato controllo perdite | Fuel 1 - Gas: Pressure switch-max / POC input<br>0 = inactive 1 = pressure switch-max<br>2 = POC<br>3 = pressure switch valve proving | | | x | |

| | | | | | | |
|---|---|---|---|---|---|---|
| 340 | Limite ripetizioni perdita di fiamma (valore fabbrica = 2 - range impostazione:1 - 2) | Repetition limit loss of flame (default value= 2 - range:1 - 2) | OEM | | x | |
| 341 | Combustibile 1 - Gas: esecuzione controllo tenuta (valore fabbrica = 2)<br>**0** = no controllo tenuta<br>**1** = controllo tenuta in avviamento<br>**2** = controllo tenuta in arresto<br>**3** = controllo tenuta in arresto e in avviamento | Fuel 1 - Gas: execution proving test (default value= 2)<br>**0** = no proving test<br>**1** = proving test on startup<br>**2** = proving test on shutdown<br>**3** = proving test on shutdown and on startup | OEM / Service | | x | |
| 342 | Combustibile 1 - Gas: tempo evacuazione controllo tenuta (valore fabbrica = 3s - range impostazione:0.2s - 10s) | Fuel 1 - Gas: proving test evacuation time (default value = 3s - range:0.2s - 10s) | OEM | | x | |
| 343 | Combustibile 1 - Gas: tempo pressione atmosferica controllo tenuta (valore fabbrica = 10s - range impostazione:0.2s - 60s) | Fuel 1 - Gas: proving test time atmospheric pressure (default value = 10s - range:0.2s - 60s) | OEM | | x | |
| 344 | Combustibile 1 - Gas: tempo riempimento controllo tenuta (valore fabbrica = 3s - range impostazione:0.2s - 10s) | Fuel 1 - Gas: proving test filling time (default value = 3s - range:0.2s - 10s) | OEM | | x | |
| 345 | Combustibile 1 - Gas: tempo test pressione gas (valore fabbrica = 10s - range impostazione:0.2s - 60s) | Fuel 1 - Gas: proving test time gas pressure (default value = 10s - range:0.2s - 60s) | OEM | | x | |
| 346 | Combustibile 1 - Gas: tempo attesa consenso pressostato di minima (valore fabbrica = 10s - range impostazione:0.2s - 60s)<br>Se la pressione del gas è troppo bassa, in fase 22 non verrà eseguito l'avviamento: il sistema compie un numero impostabile di tentativi finché non si arriva al blocco. Il tempo di attesa tra un tentativo e il successivo viene raddoppiato ad ogni tentativo. | Fuel 1 - Gas: waiting time gas shortage (default value = 10s - range:0.2s - 60s)<br>If the gas pressure is too low, in phase 22 the startup will not be performed: the system tries for a certain number of times the it locks out. The time interval between two attempts is doubled at each attempt. | OEM | | x | |
| 348 | Combustibile 1 - Gas: Tempo di post-ventilazione 3 (abortito con regolatore di potenza (LR)-ON | Fuel 1 - Gas: Postpurge time 3 (abortion with load controller (LR)-ON | OEM / Service | | x | |
| 361 | Combustibile 1 - Olio: sonda rilevazione fiamma attivo (valore fabbrica = 0)<br>**0** = QRB../QRC..<br>**1** = ION / QRA.. | Fuel 1 - Oil: active detector flame evaluation (default value = 0)<br>**0** = QRB../QRC..<br>**1** = ION / QRA.. | OEM / Service | | x | |

| | | | | | | |
|---|---|---|---|---|---|---|
| 362 | Combustibile 1 - Olio: preventilazione (valore fabbrica = 1)<br>**1** = attivo<br>**0** = non attivo<br>In ambito civile la norma EN267 rende obbligatoria la preventilazione. In ambito industriale, vedere i casi in cui la norma EN746-2 prevede la possibilità di non fare la preventilazione. | Fuel 1 - Oil: prepurging (default value = 1)<br>**0** = deactivated<br>**1** = activated<br>**0** = deactivated<br>WARNING: in the civil field, the prepurge is mandatory according to the standard EN267. In the industrial fiels, check if the pre purge can be avoided according to the standard EN746-2 | OEM / Service | | x | |
| 365 | Combustibile 1 - Olio: tempo preventilazione (valore fabbrica = 15s - range impostazione:15s - 60min) | Fuel 1 - Oil: prepurging time (default value = 15s - range:15s - 60min) | OEM / Service | | x | |
| 366 | Combustibile 1 - Olio: tempo preaccensione (valore fabbrica = 2s - range impostazione:0.2s - 60min) | Fuel 1 - Oil: preignition time (default value = 2s - range:0.2s - 60min) | OEM / Service | | x | |
| 367 | Combustibile 1 - Olio: tempo di sicurezza 1 (TSA1) (valore fabbrica = 5s - range impostazione:0.2 - 15s) | Fuel 1 - Oil: safety time 1 (TSA1) (default value = 5s - range:0.2 - 15s) | OEM | | x | |
| 369 | Combustibile 1 - Olio: tempo di risposta a cadute di pressione entro TSA1 e TSA2 (valore fabbrica = 1.8s - range impostazione:0.2s - 14.8s) | Fuel 1 - Oil: time to respond to pressure faults in TSA1 and TSA2 (default value = 1.8s - range:0.2s - 14.8s) | OEM | | x | |
| 370 | Combustibile 1 - Olio: Intervallo 1 (valore fabbrica = 2s - range impostazione:0.2s - 60min) | Fuel 1 - Oil: Interval 1 (default value = 2s - range:0.2s - 60min) | OEM / Service | | x | |
| 371 | Combustibile 1 - Olio: tempo di sicurezza 2 (TSA2) (valore fabbrica = 3s - range impostazione:0.2 - 10s) | Fuel 1 - Oil: safety time 2 (TSA2) (default value = 3s - range:0.2 - 10s) | OEM | | x | |
| 372 | Combustibile 1 - Olio: Intervallo 2 (valore fabbrica = 2s - range impostazione:0.2s - 60min) | Fuel 1 - Oil: Interval 2 (default value = 2s - range:0.2s - 60min) | OEM / Service | | x | |
| 373 | Combustibile 1 - Olio: Tempo postcombustione (valore fabbrica = 8s - range impostazione:0.2s - 60s) | Fuel 1 - Oil: Postcombustion time (default value = 8s - range:0.2s - 60s) | OEM / Service | | x | |
| 374 | Combustibile 1 - Olio: Tempo postventilazione (valore fabbrica = 0.2s - range impostazione:0.2s - 180min) | Fuel 1 - Oil: Postpurging time (default value = 0.2s - range:0.2s - 180min) | OEM / Service | | x | |
| 377 | Combustibile 1 - Olio: Pressostato olio di massima / ingressoPOC<br>0 = inattivo<br>1= pressostato olio di massima<br>2= POC | Fuel 1 - Oil: Pressure switch-max/POC input<br>0 = inactive<br>1 = pressure switch-max<br>2 = POC | | | x | |

| | | | | | | |
|---|---|---|---|---|---|---|
| 380 | Limite ripetizioni perdita di fiamma (valore fabbrica = 2 - range impostazione:1 - 2) | Repetition limit value loss of flame (default value = 2 - range:1 - 2) | OEM | | x | |
| 381 | Combustibile 1 - Olio: tempo iniezione olio (valore fabbr. = 1)<br>**0** = preaccensione corta (Ph38 - fase programma 38)<br>**1** = preaccensione lunga (con ventilatore) (Ph22 - fase programma 22) | Fuel 1 - Oil: time oil ignition (default value = 1)<br>**0** = short preignition (Ph38-progr. phase 38)<br>**1** = long preignition (with fan) (Ph22 - program phase 22) | OEM / Service | | x | |
| 384 | Combustibile 1 - Olio: Tempo di post-ventilazione 3 (abortito con regolatore di potenza (LR)-ON | Fuel 1 - Oil: Postpurge time 3 (abortion with load controller (LR)-ON | OEM / Service | | x | |

***Block 400: Setting air/fuel ratio curves***

| Param. | Descrizione | Description | Password | LMV20 LMV27 | LMV26 | LMV37 |
|---|---|---|---|---|---|---|
| 401 | Curve controllo servocomando combustibile (F): si accede alla lista dei punti da impostare (da P0 a P9) - consultare paragrafo “Impostazione curve” | Ratio control curve fuel actuator (F): it accesses to the parameter list of the points to be set (P0 to P9) - see paragrapf “Setting the curves” | OEM / Service | x | x | x |
| 402 | Curve controllo servocomando aria (A): si accede alla lista dei punti da impostare (da P0 a P9) - consultare paragrafo “Impostazione curve” | Ratio control curve air actuator (A): it accesses to the parameter list of the points to be set (P0 to P9) - see paragraph “Setting the curves” | OEM / Service | x | x | x |
| 403 | Curve controllo inverter (F + A): si accede alla lista dei punti da impostare (da P0 a P9) - consultare paragrafo “Impostazione curve” | Ratio control curves VSD (curve setting only) | SO | | x | x |
| 404 | Combustibile 1 - Curve controllo servocomando combustibile 1 (F): si accede alla lista dei punti da impostare (da P0 a P9) - consultare paragrafo “Impostazione curve” | Fuel 1: Ratio control curves fuel actuator (curve setting only) | SO | | x | |
| 405 | Combustibile 1 - Curve controllo servocomando aria (A): si accede alla lista dei punti da impostare (da P0 a P9) - consultare paragrafo “Impostazione curve” | Fuel 1: Ratio control curves air actuator (curve setting only) | SO | | x | |
| 406 | Combustibile 1 - Curve controllo inverter (F + A): si accede alla lista dei punti da impostare (da P0 a P9) - consultare paragrafo “Impostazione curve” | Fuel 1: Ratio control curves VSD (curve setting only) | SO | | x | |

***Block 500: Air/fuel ratio control***

| Param. | Descrizione | Description | Password | LMV20 LMV27 | LMV26 | LMV37 |
|---|---|---|---|---|---|---|
| 501 | Posizione **servocomando combustibile** in assenza di fiamma (no-flame)<br>**Indice 0** = posizione di sosta = 0°<br>**Indice 1** = posizione preventilazione = 0°<br>**Indice 2** = posizione postventilazione = 15° | No-flame position fuel actuator<br>**Index 0** = no-load position = 0°<br>**Index 1** = prepurge position = 0°<br>**Index 2** = postpurge position = 15° | OEM / Service | x | x | x |
| 502 | Posizione **servocomando aria** in assenza di fiamma (no-flame)<br>**Indice 0** = posizione di sosta = 0°<br>**Indice 1** = posizione preventilazione = 90°<br>**Indice 2** = posizione postventilazione = 45° | No-flame position air actuator<br>**Index 0** = no-load position = 0°<br>**Index 1** = prepurge position = 90°<br>**Index 2** = postpurge position = 45° | OEM / Service | x | x | x |
| 503 | **% giri motore con inverter** 0% = ventilatore fermo, 100% = ventilatore al massimo della velocità<br>**Indice 0** = posizione di sosta = 0%<br>**Indice 1** = posizione preventilazione = 100%<br>**Indice 2** = posizione postventilazione = 50% | No-flame speeds VSD<br>Index 0 = no-load speed = 0%<br>Index 1 = prepurge speed = 100%<br>Index 2 = postpurge speed = 50% | OEM / Service | | x | x |
| 504 | Combustibile 1 - Posizione **servocomando combustibile** in assenza di fiamma (no-flame)<br>**Indice 0** = posizione di sosta = 0°<br>**Indice 1** = posizione preventilazione = 0°<br>**Indice 2** = posizione postventilazione = 15° | Fuel 1<br>No-flame position fuel actuator<br>**Index 0** = no-load position = 0°<br>**Index 1** = prepurge position = 0°<br>**Index 2** = postpurge position = 15° | OEM / Service | | x | |
| 505 | Combustibile 1 - Posizione **servocomando aria** in assenza di fiamma (no-flame)<br>**Indice 0** = posizione di sosta = 0°<br>**Indice 1** = posizione preventilazione = 90°<br>**Indice 2** = posizione postventilazione = 45° | Fuel 1<br>No-flame position air actuator<br>**Index 0** = no-load position = 0°<br>**Index 1** = prepurge position = 90°<br>**Index 2** = postpurge position = 45° | OEM / Service | | x | |
| 506 | Combustibile 1 - **% giri motore con inverter** 0% = ventilatore fermo, 100% = ventilatore al massimo della velocità<br>**Indice 0** = posizione di sosta = 0%<br>**Indice 1** = posizione preventilazione = 100%<br>**Indice 2** = posizione postventilazione = 50% | Fuel 1<br>No-flame speeds VSD<br>Index 0 = no-load speed = 0%<br>Index 1 = prepurge speed = 100%<br>Index 2 = postpurge speed = 50% | OEM / Service | | x | |
| 522 | Tempo rampa di salita inverter | Ramp up | OEM / Service | | x | x |
| 523 | Tempo rampa di discesa inverter | Ramp down | OEM / Service | | x | x |

| | | | | | | |
|---|---|---|---|---|---|---|
| 542 | Activation of VSD / PWM fan (PWM = Pulse-Width Modulation)<br>0=deactived 1=actived | Activation of VSD / PWM fan<br>(PWM = Pulse-Width Modulation) | OEM / Service | | x | x |

| | | | | | | | | | |
|---|---|---|---|---|---|---|---|---|---|
| 544 | | | Parameter 544 | | | | OEM / Service | x | x | x |
| | | | Modulation **32s** | Modulation **48s** | Modulation **64s** | Modulation **80s** | | | | |
| | Actuator | Actuating speed parameter 613 | Max. delta between the curve points | | | | | | | |
| | Actuator (<= 5Nm) | 5s / 90° | 31° | 46° | 62° | 77° | | | | |
| | Actuator **SQM33.7** | 17s / 90° | **9° (1)** | 13° | 18° | 22° | | | | |

(1) in this case the max. position of 90° can't be reached

| | | | | | | |
|---|---|---|---|---|---|---|
| 545 | Percentuale minima di carico per modulazione (valore fabbrica = n.d. - range impostazione:20%-100%) | Lower load limit (default value = n.d. - range:20%-100%) | OEM / Service | x | x | x |
| 546 | Percentuale massima di carico per modulazione (valore fabbrica = n.d. - range impostazione:20%-100%) | Higher load limite (default value = n.d. - range:20%-100%) | OEM / Service | x | x | x |
| 565 | Combustibile 1 - Percentuale minima di carico per modulazione (valore fabbrica = n.d. - range impostazione:20%-100%) | Fuel 1<br>Lower load limit (default value = n.d. - range:20%-100%) | OEM / Service | | x | |
| 566 | Combustibile 1 - Percentuale massima di carico per modulazione (valore fabbrica = n.d. - range impostazione:20%-100%) | Fuel 1<br>Higher load limite (default value = n.d. - range:20%-100%) | OEM / Service | | x | |

***Block 600: Actuators***

| Param. | Descrizione | Description | Password | LMV20 LMV27 | LMV26 | LMV37 |
|---|---|---|---|---|---|---|
| 601 | Impostazione punto di riferimento<br>**Indice 0** = combustibile<br>**Indice 1** = aria<br>**0** = chiuso (<0°)<br>**1** = aperto (>90°) | Selection of reference point<br>**Index 0** = fuel<br>**Index 1** = air<br>**0** = closed (<0°)<br>**1** = open (>90°) | OEM | x | x | x |
| 602 | Direzione rotazione del servocomando<br>**Indice 0** = combustibile<br>**Indice 1** = aria<br>**0** = antiorario<br>**1** = orario<br>VEDI MESSAGGIO DI “ATTENZIONE” RIPORTATO SOTTO. | Actuator’s direction of rotation<br>**Index 0** = fuel<br>**Index 1** = air<br>**0** = counterclockwise<br>**1** = clockwise<br>SEE “WARNING” MESSAGE QUOTED BELOW. | OEM | x | x | x |
| 606 | Limite tolleranza per monitoraggio posizione (0.1°)<br>**Indice 0** = combustibile<br>**Indice 1** = aria | Tolerance limit of position monitoring (0.1°)<br>**Index 0** = fuel<br>**Index 1** = air | OEM / Service | x | x | x |
| 608 | Combustibile 1 - Impostazione punto di riferimento<br>**Indice 0** = combustibile<br>**Indice 1** = aria<br>**0** = chiuso (<0°)<br>**1** = aperto (>90°) | Fuel 1 :<br>Selection of reference point<br>**Index 0** = fuel<br>**Index 1** = air<br>**0** = closed (<0°)<br>**1** = open (>90°) | OEM | | x | |
| 609 | Combustibile 1 - Direzione rotazione del servocomando<br>**Indice 0** = combustibile<br>**Indice 1** = aria<br>**0** = antiorario<br>**1** = orario<br>VEDI MESSAGGIO DI “ATTENZIONE” RIPORTATO SOTTO. | Fuel 1 :<br>Actuator’s direction of rotation<br>**Index 0** = fuel<br>**Index 1** = air<br>**0** = counterclockwise<br>**1** = clockwise<br>SEE “WARNING” MESSAGE QUOTED BELOW. | OEM | | x | |
| 610 | Combustibile 1 - Limite tolleranza per monitoraggio posizione (0.1°)<br>**Indice 0** = combustibile<br>**Indice 1** = aria | Fuel 1 :<br>Tolerance limit of position monitoring (0.1°)<br>**Index 0** = fuel<br>**Index 1** = air | OEM / Service | | x | |

| | | | | | | |
|---|---|---|---|---|---|---|
| 611 | Tipo di riferimento dei servocomandi<br>index 0 = fuel (default = 0 (riferimento standard)<br>index 1 = air (default = 0 (riferimento standard)<br>0 = standard<br>1 = fermo entro il raggio utile<br>2 = fermi interni (SQN1...)<br>3 = entrambi | Type of referencing<br>Index 0 = fuel<br>Index 1 = air<br>0 = standard<br>1 = stop within usable range<br>2 = internal stop (SQN1...)<br>3 = both | OEM | x | x | x |
| 612 | Combustibile 1 - Tipo di riferimento del servocomando combustibile<br>0 = standard<br>1 = fermo entro il raggio utile<br>2 = fermi interni (SQN1...)<br>3 = entrambi | Fuel 1:<br>Type of reference for fuel actuator<br>0 = standard<br>1 = range stop in the usable range<br>2 = internal range stop (SQN1…)<br>3 = both | OEM | | x | |
| 613 | Tipo di servocomando<br>**Indice 0** = combustibile<br>**Indice 1** = aria<br>0 = 5s / 90° (1Nm, 1,2Nm, 3Nm)<br>1 = 10s / 90° (6Nm)<br>2 = 17s / 90° (10Nm) | Type of actuator<br>**Index 0** = fuel<br>**Index 1** = air<br>0 = 5 s / 90° (1Nm, 1,2Nm, 3Nm)<br>1 = 10 s / 90° (6Nm)<br>2 = 17 s / 90° (10Nm) | OEM | x | x | x |
| 614 | Combustibile 1 :Tipo di servocomando<br>**Indice 0** = combustibile<br>**Indice 1** = aria<br>0 = 5s / 90° (1Nm, 1,2Nm, 3Nm)<br>1 = 10s / 90° (6Nm)<br>2 = 17s / 90° (10Nm) | Fuel 1 : Type of actuator<br>**Index 0** = fuel<br>**Index 1** = air<br>0 = 5 s / 90° (1Nm, 1,2Nm, 3Nm)<br>1 = 10 s / 90° (6Nm)<br>2 = 17 s / 90° (10Nm) | OEM | | x | |
| 641 | Attivazione procedura di standardizzazione inverter (riferirsi al codice errore 82)<br>0 = standardizzazione disattivata<br>1 = standardizzaione attivata | Control of speed standardization of VSD Error diagnostics of negative values (refer to error code 82)0 = no speed standardization 1 = speed standardization active | | | x | x |

| | | | | | | |
|---|---|---|---|---|---|---|
| 645 | Configurazione uscita analogica % di carico (valore fabbrica = 0)<br>**0** = DC 0..10 V<br>**1** = DC 2..10 V<br>**2** = DC 0/2..10 V | Configuration of analog output (default value = 0)<br>**0** = DC 0..10 V<br>**1** = DC 2..10 V<br>**2** = DC 0/2..10 V | OEM / Service | **LMV27** | x | x |

**ATTENTION:** as for SQM3x actuators, set the direction according to the acutator function. As far as SQN1x actuators, set **always** the counterclockwise direction, independently from the model chosen for the specific function.

## *Block 700: Error history*

| Param. | Descrizione | Description | Password |
|---|---|---|---|
| 701 | Storico errori: 701 - 725.01.codice | Error history: 701 - 725.01.code | Service / Info |
| ° | Storico errori: 701 - 725.02.codice diagnostico | Error history: 701 - 725.02.diagnostic code | Service / Info |
| ° | Storico errori: 701 - 725.03.classe errore | Error history: 701 - 725.03.error class | Service / Info |
| ° | Storico errori: 701 - 725.04.fase | Error history: 701 - 725.04.phase | Service / Info |
| ° | Storico errori: 701 - 725.05.contatore avvii | Error history: 701 - 725.05.startup counter | Service / Info |
| 725 | Storico errori: 701 - 725.06.carico | Error history: 701 - 725.06.load | Service / Info |

***Block 900: Process data***

| Param. | Descrizione | Description | Password |
|---|---|---|---|
| 903 | Potenza attuale (valore fabbrica = 0% - range impostazione = 0-100%)<br>**Indice 0** = combustibile<br>**Indice 1** = aria | Current output (default value = 0% - range = 0-100%)<br>**Index 0** = fuel<br>**Index 1** = air | Service / Info |
| 922 | Posizione incrementale servocomandi (valore fabbrica = 0% - range impostazione = -50% - 150%)<br>**Indice 0** = combustibile<br>**Indice 1** = aria | Incremental position of actuators (default value = 0% - range = -50% - 150%)<br>**Index 0** = fuel<br>**Index 1** = air | Service / Info |
| 935 | Giri motore assoluti | Absolute speed | OEM / Service |
| 936 | Giri motore in fase standardizzazione | Standardized speed | Service / Info |
| 942 | Sorgente potenza attiva | Active load source | OEM / Service |
| 945 | Solo con **LMV26:**<br>Combustibile attuale<br>0 = combustibile 0<br>1 = combustibile 1 | Actual fuel<br>0 = fuel 0<br>1 = fuel 1 | Service / Info |
| 947 | Risultato interrogazione contatti (codifica bit) | Result of contact sensing (bit-coded) | Service / Info |
| 950 | Stato relè (codifica bit) | Required relay state (bit-coded) | Service / Info |
| 954 | Intensità di fiamma ( 0% ÷ 100%);<br>minima corrente 30% = 4µA;<br>massima corrente100% = 16µA;<br>massima corrente ammissibile = 40µA. | Intensity of flame (range = 0% - 100%)<br>minimum current 30% = 4µA;<br>maximum current100% = 16µA;<br>maximum current possible = 40µA. | Service / Info |
| 961 | Stato moduli esterni e display | Status of external modules and display | Service / Info |
| 981 | Errore memoria: codice | Error memory: code | Service / Info |
| 982 | Errore memoria: codice diagnostica | Error memory: diagnostic code | Service / Info |
| 992 | Flag di errore | Error Flags | OEM / Service |

### *Actuators references*

An incremental transducer is used to ensure position feedback. Referencing of the actuators must be performed after power-on. In addition, at the end of each shutdown in phase 10, the actuators are referenced to ensure that individual stepping errors, which could lead to shutdown, do not accumulate. If a position error occurs, the system switches to the safety phase (phase 01), enabling the actuators with detected position errors to be referenced. During the following phase 10, the only actuators that are referenced are those that were not referenced before in the safety phase (phase 01). The position of the reference point can be selected depending on the type of burner design, either the CLOSED position (<0°) or the OPEN position (>90°).

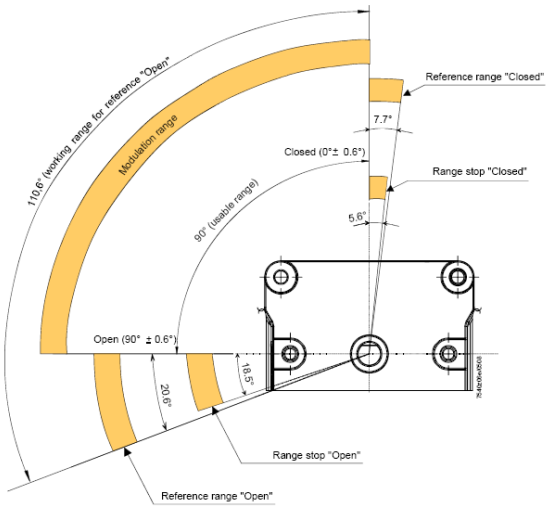


| Param. | Descrizione | Description | Password |
|---|---|---|---|
| 601 | Impostazione punto di riferimento<br>**Indice 0** = combustibile<br>**Indice 1** = aria<br>**0** = chiuso (<0°)<br>**1** = aperto (>90°) | Selection of reference point<br>**Index 0** = fuel<br>**Index 1** = air<br>**0** = closed (<0°)<br>**1** = open (>90°) | OEM |

If the acutators position is exchanged (error code: 85), the burner will lockout and will try to adjust for three times, then it will lock out.

### *Gas proving system*

Valve proving is only active when firing on gas. This is a leakage test designed to detect leaking gas valves and, if necessary, to prevent the valves from opening or ignition from being switched on. Lockout is initiated. When performing valve proving, the gas valve on the burner side is opened first to bring the test space to atmospheric pressure. Then, the valve is closed whereupon the pressure in the test space must not exceed a certain level, measured by the gas leakage pressure switch (PGCP). Then, the gas valve on the mains side is opened to fill the gas pipe. When the valve is closed again, the gas pressure must not drop below a certain level. Valve proving can be parameterized to take place on startup, shutdown, or on both phases.

### *Air-fuel curve points*

There are 10 air-fuel curve points: T

P0 = ignition position. Only for ignition; after the ignition, the burner works between Point P1 (low flame) and point P9 (high flame) without going back to P0.

P0 can be set everywhere irrespective of all the other points.

## COMMISSIONING THE BURNER

The LMV2x complete programming must be performed on units that has never been set before or reset units (e.g. spare parts).
The programming procedure is performed by setting the following main parameters:

1 if LMV.. is a spare part, insert burner ID (parameter **113**) at least 4 digit.
2 type of fuel train (parameter "**201**")
3 air/fuel ratio curvepoints (Block "**400**")
4 maximum load percentage (parameter "**546**")
5 minimum load percentage (parameter "**545**")

| | |
|---|---|
| ⚠ | CAUTION: if an error message as "Loc.." appears when the unit is turned to on for the first time, press ENTER (InFo) until the "Reset" message apperas. After few seconds, the message "OffUpr" will be displayed. |

This message shows that the unit has not been programmed before or that the operating mode (fuel train) is not set yet or that the unit has not been completely programmed. Pree keys **F** (Fuel) and **A** (Air) at the same time unitl the display shows **code** and next it will show 7 bars the first on the left is flashing. If the display shows "Off", it means that the unitis already set, then see the instructions on chapter "Adjsuting the burner with LMV2x already programmed").

At the first LMV startup, the AZL display will show

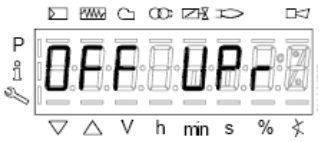


It means that the unit was never set or that no mode was chisen or that some parameters have to be set furthert.
Push F (fuel) and A (Air) together untilthe display shows **code** and then a 7 digit dashed line blinking on the left.

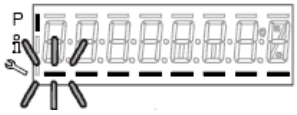

Press the "**+**" key until the first character of the password (the default password is 9876), then press **ENTER (InFo)**, the character now turn to a bar while the second bar starts flashing. Press "**+**" until the second character is entered, then press **ENTER (InFo)**.
Repeat the procedure until the last character si set, then press **ENTER (InFo)**, then **ENTER** again until the message **PArA** appears: then the first parameters block ("**400**") will be shown:

Press **ENTER (InFo)** again, to gain access to programming the operating mode (fuel train):

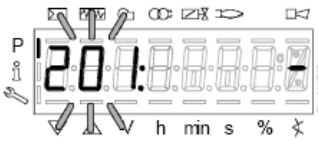


In the example, set configuration **1** = direct gas ignition (G mod).
Other possibilities are below listed:

the types of fuel trains are the following:

| Param. | Descrizione | Description | Password |
|---|---|---|---|
| 201 | Modalità funzionamento bruciatore ( rampa comb., mod. / multistadio, servocom., ecc.)<br>__= non definito (cancellazione curve)___=<br>**1** = accensione diretta a gas (G mod)<br>**2** = accensione tramite pilota gas con attacco tra le due elettrovalvole EV1/EV2 gas (Gp1 mod)<br>**3** = accens. tramite pilota gas con attacco a monte dell'elettrov. EV1 del gas (Gp2 mod)<br>**4** = accensione a gasolio - modul. (Lo mod)<br>**5** = accens. a gasolio - bistadio (Lo 2 stage)<br>**6** = accens. a gasolio - tristadio (Lo 3 stage) | Burner operating mode (fuel train, mod / multi-stage, actuators, etc.)<br>__= undefined (delete curves)<br>**1** = gas direct ignition(G mod)<br>**2** = gas pilot ignition with connection between the two gas solenodi valves EV1/EV2 (Gp1 mod)<br>**3** = gas pilot ignition with connection upstrem the gas solenoid valve EV1 (Gp2 mod)<br>**4** = Light Oil - modulating (Lo mod)<br>**5** = Light Oil - 2stages (Lo 2 stage)<br>**6** = Light Oil - 3stages (Lo 3 stage) | OEM / Service |

G mod

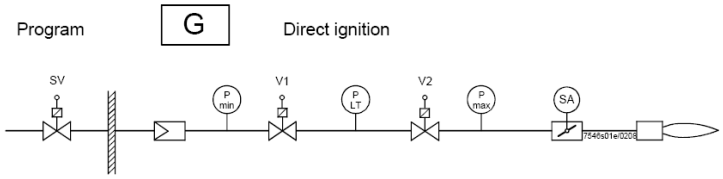


Gp1 mod

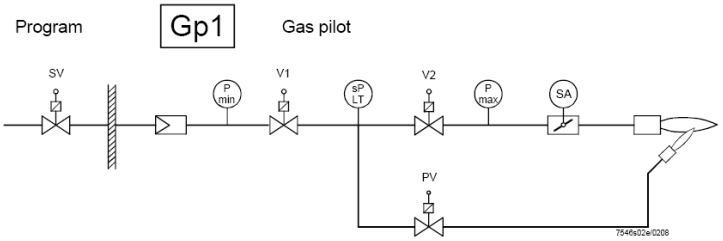


Gp2 mod

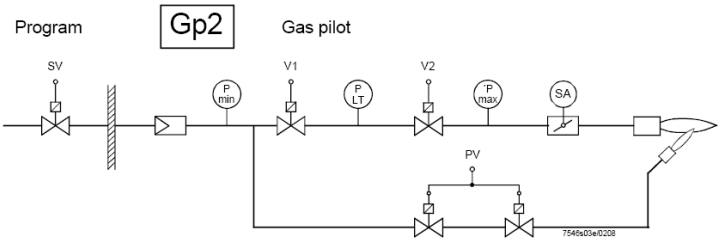


Lo mod

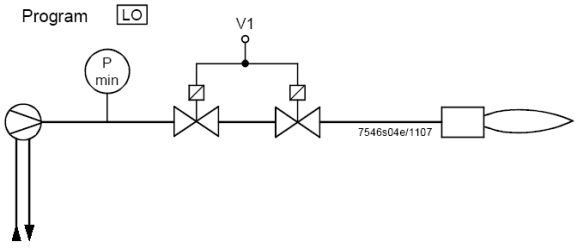


Lo 2-stage

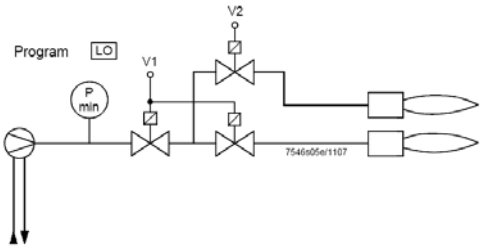

Lo 3-stage

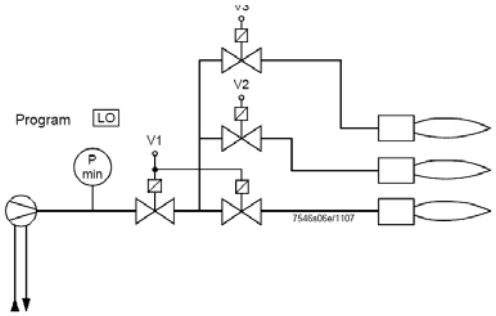


In the example the Gmod gas train has been set (Configuration “1”).

Choose the fuel train by pressing ENTER, then press “**+**” / “**-**”. Press ENTER to confirm: number “1” will appear on the right side of the display.

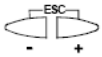

Then press ESC

to quit. The following display is:

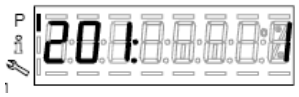


Press “**+**” to show the first point to be set P0.

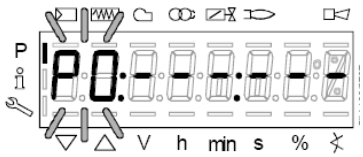


Press **F** and **“+”** to increase the opening angle of the fuel actuator “**0F”** until the requested value is reached (for example 12°÷15°, see below) for the ignition point; or press **F** and **“-”** to decrease the angle:

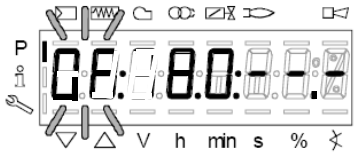


To set the air damper opening angle “0A” in the ignition point (10° for example - see below), press “A” and “+” “A” and “-” at the same time:

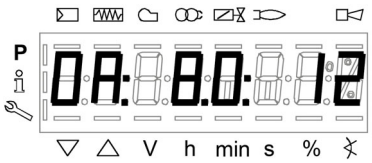


LMV37:

Now the air and fuel quantities are set at the ignition point P0:

By pressing “+”, point P9 can be programmed to set the air and fuel values at the maximum output

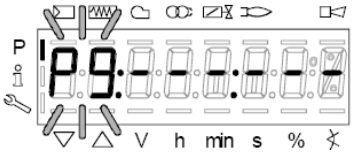


go on as described above to the the opening angles of the air actuator (A) and fuel actuator (F):

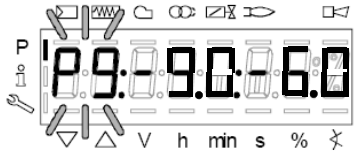


| | |
|---|---|
| ⚠ | **CAUTION:** at the first burner adjustment, it is recommended to set the maximum output P9 at the same value (or little higher) of the ignition point, in order to safely reach point P9 next (see next paragraph). |

By pressing “+” the display will show:

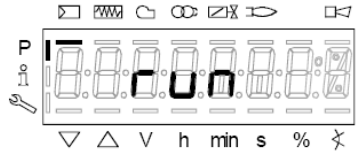


The burner is ready to startup. Now it is possible to re-set the curve points while the burner is operating (“warm setting”) by pressing the ENTER (InFo) or while the burner is in stand-by mode (“cold setting”) by pressing ENTER .

### *Warm setting*

1 Once pressed button **"enter"** and the chain thermostats open (X5-03 terminals), the LMV.. show Ph12.Then close the chain termostat and the unit performs the prepurge cycle (see "Phases List") and stops at the ignition point P0 without ignition anyway.

2 By pressing "+", the burners lights abd the air/fuel ratio can be properly set in presence of flame.

3 By pressing "+" again, the next point P1 is shown (eqaul to P0 as the unit automatically set P0=P1);

4 By pressing "+" again, the "Calc" message will be displayed: the unit is processing the sir/fuel ratio curvepoints until point P9, previuosly set. Once the processing is perfomed the calculated point P2 is shown.By pressing "+" again, the "Calc" message will be displayed: the unit is processing the sir/fuel ratio curvepoints until point P9, previuosly set. Once the processing is perfomed the calculated point P2 is shown.

5 By pressing "+", it is possible to go through the processed curve until point P9 is reached.

**Note:** if the point doesn't blink, servomotors are still running.

6 n order to set P9 with the gas flow rate according to the generator needs, follow this procedure:

**Note: the purpose is to fully open the gas throttle and later on to adjust the gas flow rate through the gas pressure governor.**

- Operate smoothly opening by just a few degrees the air damper and later on increasing the gas throttle opening it by a few degrees. Keep monitoring the flue through the flue analyser. Keep the air excess inside normal figures (from 3% to 7% residual O2) operating by means for the air damper servomotor;
- Keep increasing the air damper opening and then the gas throttle, as done in the sequence above, remebering to get the full firing rate wih the gas throttle fully open (or the oil pressure regulator at its maximum pressure position).

See example below:

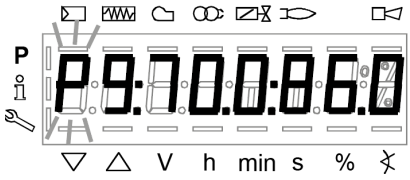


- If, while opening the gas throttle, the gas flow rate was too high, reduce it only through the gas governor and keep opening the throttle until the 60÷70° position is got.
- If the gas train is equipped with a governor and a valve with an adjustable gas flow rate, fully open also this last valve, smoothly! The gas flow rate is always set by means of the governor.

7 As soon as all the devices are fully open, set the gas flow rate through the governor.

8 Set the air damper position in order to get the reccomended air excess (3÷4.8% O2 on gas and 2.9÷4.9 % on oil).

**Note1**: on high flame, if the gas flow rate is changed by means of the governor, all the other points below high flame must be checked again.

9 After having set the high flame point P9, keep "-" pressed for some seconds unitl "Calc" is displayed in order to have the LMV recalculating all the points:

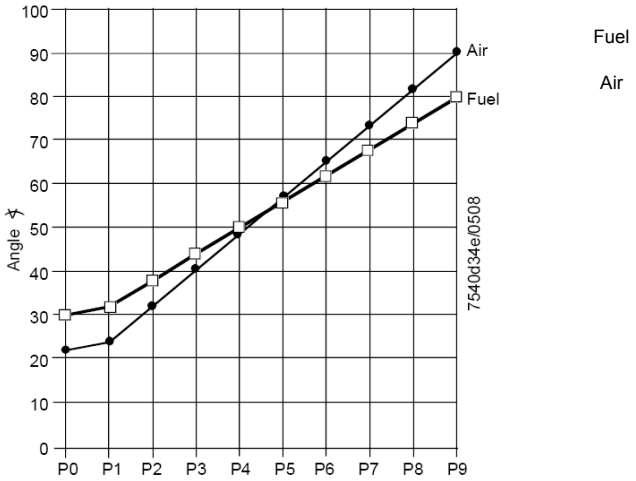


10 the unit will automatically reach point P8 processed: check the combustion values in this point and, if necessary, change it.

11 Press "-" to go down to the lower points and check the combustion values, change the points if necessary.

**Note:** if in an intermediate point (for example P5), the change of the actuators position is important according to the processed point

P5, keep pressing “-” unitl “Calc” is displayed. The curve will be processed again downwards point P1.

**deviation between two following points: 25°max.**

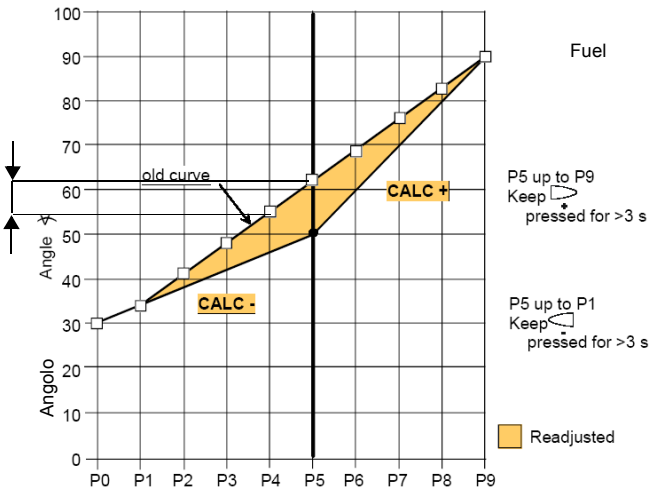


12 press “-” to go through the lower points and check the combustion values, if necessary change the points as described above.

13 By pressing ESC, at the end of the points adjusments, the parameter “**546”** (setting the maximum load) will be displayed; press ENTER (InFo), then “+” until 100%, then press ENTER (InFo) again, ESC and then “+”.

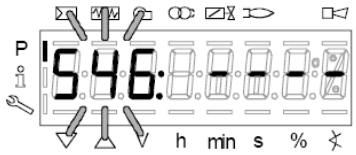


14 The parameter “**545”** (setting the minimum load) is displayed: press ENTER (InFo), then “+” until 20%. Press ENTER, then press ESC for three times. The message “oP” will be displayed as well as the load percentage at the burner is working on.

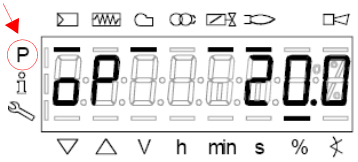


he hyphen related to the symbol “P” (highlited in the picture) will be off to show that the unit exited the programmig mode. The burner will then work automatically, following the curve set.

.**Note1:** if the curvepoints settings is quit before end (by pressing ESC or for a faulty shutdown), the message “OFF UPr” (Start prevention) will be diplayed until all the curvepoints will be set.

**Note2:** if the gas flow rate at high flame point (maximum load) is changed by means of the pressure stabiliser, all the curvepoints must be checked by going through the curve downwards and resetting them if necessary.

**Note3:** if the point does not flash, it means thet the actuators have not reached the set position yet.

**Note4:** if an error occurs causing a safety shutdwon during the processing of the curve, the processing itself will be interrupted.

### *Cold setting*

The ”cold setting“ (without flame) can be performed only when all the curve points values are known (for instance, in case of replacement).

| | |
|---|---|
| ⚠ | **When the burner is off, if you modify one curve set point, when the burner restarts the AZL2x shows OFF UPr (OFF UPr0 or OFF UPr1 for LMV26). The LMV.. then, requires a new "warm" startup (see procedure paragraph "Warm Setting”) by checking again all points of curve from P0 to P9.** |

## BURNER STARTUP WITH LMV2x ALREADY PROGRAMMED

Once the LMV turns on, the AZL display will show

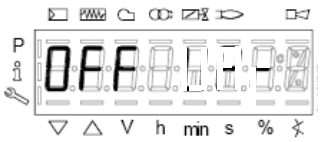


The burners is basically factory set. The air/fuel ratio curve is set with the maximum output point P9 a little higher or equal to P0. To adjust the burner on the plant site, adjust the maximum output point to the flow rate values really requested. Then go through the curve-points, by pressing "+" several times to reach point P9: then adjust the air actuator position (for the air damper) and the fuel acttuator (for the butterfly valve, in case of gas or the oil pressure governor incase of oil), by adjusting the fuel flow rate by means of the gas pressure stabiliser (for gas) or the oil pressure governor (for oil), checking the combustion valeus contemporarly. Once the burner is adjusted at the maximum output, press "-" for more than 5 seconds to process the curve downwards. The curve is then a straight line: go on checking the combustion values point by point; change them if necessary and in case linearise the curve again.

Before starting the burner up, press **F** and **A** at the same time

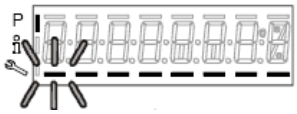

enter the password following the procedure on chapter "Programming LMV2x".

Press ENTER until the display will show:

Press ENTER again: it will show

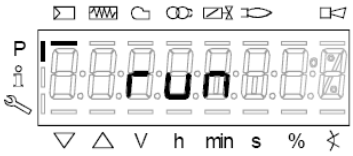


press ENTER (InFo) : the display will show phase 12.

Ph12: *Standby* phase (stationary)

Ph12: *Standby* phase (stationary)

By closing the thermostatic series, the burner startup cycle will take place:

Ph22: *Fan ramp up* phase (fan motor = ON, safety shutoff valve = ON)

Ph24: *Traveling to prepurge position* phase

Ph30: *Prepurge* phase

Ph36: *Traveling to ignition position* phase

Ph38: *Preignition* phase

Ph40: *1st safety time* phase (ignition transformer ON)

Ph42: *1st safety time* phase (ignition transformer OFF), preignition time OFF

Ph44: *Interval1*

The startup sequence stops at phase 44.

**The burners is lit and is in"P1" position (low flame point):**

Set the air/fuel ratio curvepoints as described on chapter “Programming the LMV2x”

**Note:** the other phases are
Ph60 = operation (OP= in modulation)
Ph62 = travelling to shutdown
Ph70 = off but in prepurge after the burntime
Ph72 = travelling to postpurging
Ph74 = postpurge (countdown is displayed)

Press ESC the parameter “**546**” (Setting the maximum load) is displayed

Then press to exit the programming mode.
The display will show:

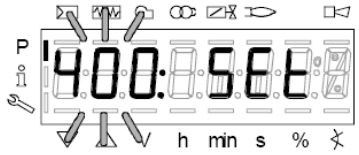


Press for a second time: the display will show the load percentage the burner is working at.

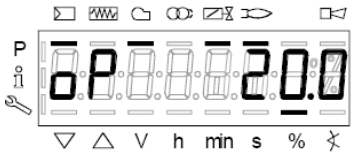


When the generator reaches the programmed set-point, the burner will be in stand-by: the display will show

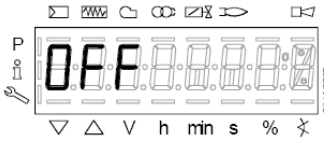

### *Reset / manual lockout*

The system can be manually locked by simultaneously pressing the **ENTER (InFo)** button and **any other button** on the AZL2.... This function allows the user to stop the system from the operating level should an emergency occur. When making a reset, the following actions are carried out:

- Alarm relay and the fault display are off
- the lockout position is cancelled
- the unit performs a reset, then it switches to stand-by

If the unit is in the lockout position, a reset can be made by pressing the **InFo** button for 1…3 seconds. The function is available only when the unit is in the lockout position. Longer or shorter pushes on the button do not produce a reset so that the system maintains the lockout position.

| Codice errore / Error code | Codice diagnostico / Diagnostic code | Descrizione / Meaning |
|---|---|---|
| 167 | 2 | / Manual lockout via AZL2… |

### *Timeout for menu operation*

The time for automatically leaving the parameter setting level can be adjusted between 10 and 120 minutes, using the parameter 127 (Timeout for menu operation). If, during that period of time, there is no operation via the AZL2..., the parameter setting level is quit and the password level reset to *Info / Service*.

**Caution! In addition, this timeout or interruption of communication between the LMV2.. and the AZL2... during the time the curves are set leads to lockout!**

| Codice erroreC Error code | Codice diagnostico Diagnostic code | DescrizioneMeaning |
|---|---|---|
| 167 | 8 | Manual locking |

### *Entering the Parameter levels*

By means of a proper use of the keys, it is possible to enter the various level parameters, as shown in the following flow chart:

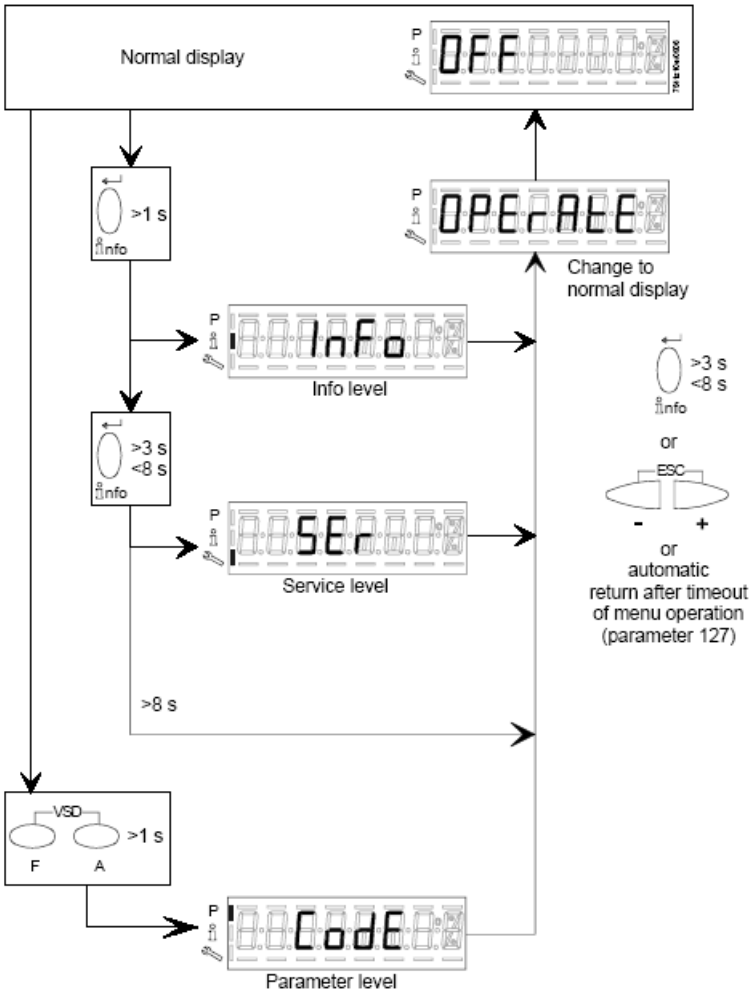


The burner and consequently the LMV2x.. are factory set; the air and fuel curves as set as well.

### *Info level*

To enter the **Info** level, proceed as follows:

1 in any menu position, press keys **+** and **-** at the same time, then the program will start again: the display will show **OFF**.

2 , until the display will show **InFo**, Press the **enter (InFo)** key

3 then il will show the first code (167) flashing, on the right side it will show the data entered. By pressing **+** or **-** it is possible to scroll (up or down) the parameter list.

4 If a dot-line is shown on the right, there is no enough room for complete visualisation: press **enter** again the data will be completely shown for 1 to 3 seconds. By pressing **enter** or **+** and**-** at the same time, the system will exit the parameter visualisation and go back to the flashing number.The **Info** level shows some basic parameters as:

| ***Parameter*** | ***Description*** |
|---|---|
| 167 | Cubic meters of fule (resettable) |
| 162 | Operating hours (resettable) |
| 163 | Device operating hours |
| 164 | Burners start-ups (resettable) |
| 166 | Total number of start-ups |
| 113 | Burner number (i.e. serial number) |
| 107 | Software version |
| 102 | Software date |
| 103 | Device serial number |
| 104 | Customer code |
| 105 | Version |
| 143 | Free |

5 Example: choose parameter 102 to show the date

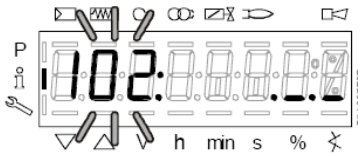


the display shows parameter **102** flashing on the left and characters **._._** on the right.

6 press InFo for 1-3 seconds: the date will appear

7 press InFo to go back to parameter “102”

8 by pressing + / -, it is possible to scroll up/down the parameter list (see table above), or, by pressing ESC or InFo for more seconds, the display will show

9 Once the last parameter is accessed (143) by pressing **+** , the **End** message will flash.

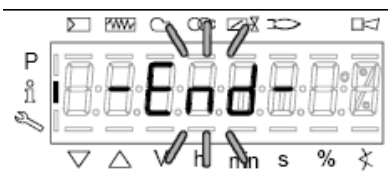

10 Press **InFo** for more than three seconds or for more than three seconds orto return to the normal display.

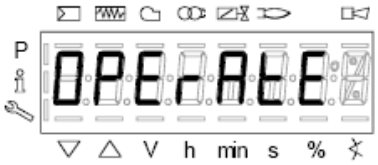


If a message like the one below is shown during operation,

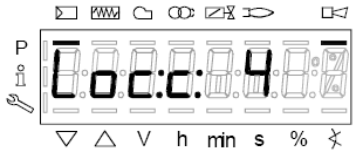


it means that the burner is locked out and the Errore code is shown (in the example “error code:4”); this message is alternating with another message

Diagnostic code (in the example “diagnostic code:3”). Record the codes and find out the fault in the Error table

To perform the reset, press InFo for one second:

The unit displays an event which does not lead to shutdown.

The display shows current error code **c:** alternating with diagnostic code **d**:

.

Press **InFo** to return to the display of phases.

Example: Error code **111** / diagnostic code 0

To reset, press InFo for a second. Record the codes and check the Error List to find the type of faults.

### *Service level*

To enter the Service mode, press InFo until the display will show:

The service level shows all the information about flame intensity, actuators position, number and lock codes:

| ***Parameter*** | ***Description*** |
|---|---|
| 954 | Flame intensity |
| 121 | % output, if set = automatic operation |
| 922 | Actuators position, 00=combustibile; 01= aria |
| 161 | Lock-outs number |
| 701..725 | Lock-outs History (see chapter 23 in the LMV2x manual) |

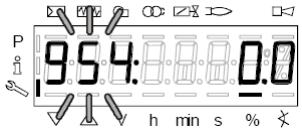


1 the first parameter will be “954”: the percentage of flame is shown on the right. By pressinf + or - it is possible to scroll up/down the parameter list.

2 Once the last parameter is accessed (143) by pressing **+** , the **End** message will blink.

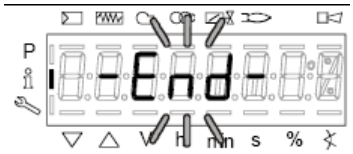


3 Press **InFo** for more than three seconds or  for more than three seconds orto return to the normal display.

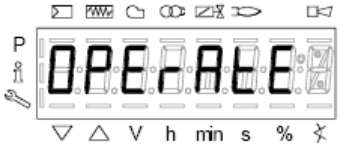

## PHASES LIST

| Fase /Phase | Funzione | Function |
|---|---|---|
| Ph00 | Fase blocco | Lockout phase |
| Ph01 | Fase di sicurezza | Safety phase |
| Ph10 | t10 = tempo raggiungimento posizione riposo | t10 = home run |
| Ph12 | Pausa | Standby (stationary) |
| Ph22 | t22 = tempo di salita ventilatore (motore ventilatore = ON, valvola intercettazione di sicurezza = ON) | t22 = fan ramp up time (fan motor = ON, safety shutoff valve = ON) |
| Ph24 | Verso posizione preventilazione | Traveling to the prepurge position |
| Ph30 | t1 = tempo preventilazione | t1 = prepurge time |
| Ph36 | Verso posizione accensione | Traveling to the ignition position |
| Ph38 | t3 = tempo preaccensione | t3 = preignition time |
| Ph40 | TSA1 = primo tempo sicurezza (trasformatore accensione ON) | TSA1= 1st safety time (ignition transformer ON) |
| Ph42 | TSA1 = primo tempo sicurezza (trasformatore accensione OFF) | TSA1 = 1st safety time (ignition transformer OFF), t42 = preignition time OFF |
| Ph44 | t44 = intervallo 1 | t44 = interval 1 |
| Ph50 | TSA2 = secondo tempo sicurezza | TSA2 = 2nd safety time |
| Ph52 | t52 = intervallo 2 | t52 = interval 2 |
| Ph60 | Funzionamento 1 (stazionario) | Operation 1 (stationary) |
| Ph62 | t62 = massimo tempo bassa fiamma (funzionamento 2, in preparazione per spegnimento, verso bassa fiamma) | t62 = max. time low-fire (operation 2, preparing for shutdown, traveling to low-fire) |
| Ph70 | t13 = tempo postcombustione | t13 = afterburn time |
| Ph72 | Verso posizione postcombustione | Traveling to the postpurge position |
| Ph74 | t8 = tempo postventilazione | t8 = postpurge time |
| Ph80 | t80 = tempo evacuazione controllo tenuta valvole | t80 = valve proving test evacuation time |
| Ph81 | t81 = tempo perdita pressione atmosferica, prova atmosferica | t81 = leakage time test time atmospheric pressure, atmospheric test |
| Ph82 | t82 = test perdita, test riempimento | t82 = leakage test filling test, filling |
| Ph83 | t83 = tempo perdita pressione gas, test pressione | t83 = leakage test time gas pressure, pressure test |
| Ph90 | Tempo attesa “mancanza gas” | Gas shortage waiting time |

## BACKUP PARAMETER WITH AZL2x

On the AZL2x you can save the configuration to download on another appliance LMV.

To do this:

access up, press **F** and **A** at the same time

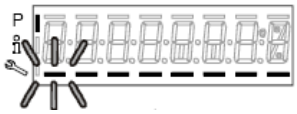

enter the password following the procedure on chapter “Programming LMV2x”.

Press ENTER until the display will show:

with the button go to the group **000** of the parameters and press 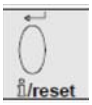

;with the buttons **+** and **-** go to **050** parameter

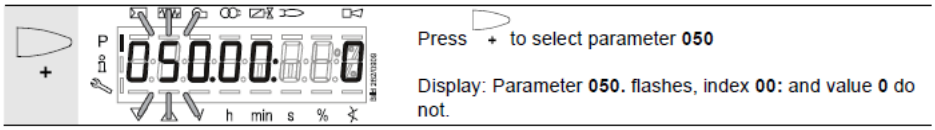


press

the disply show

press again

with the button **+** select **1** and start the backup process by pressing

.

After about 5 seconds the backup process ends and the display shows 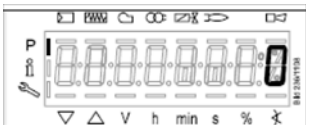

.

| | |
|---|---|
| ⚠ | **It is recommended that you perform a backup procedure whenever you change the parameters of the LMV for having a copy in AZL2x!** |

## RESTORE PARAMETER FROM AZL2x TO LMV..

To copy the previously saved configuration on AZL2x proceed as follows:
access up, press **F** and **A** at the same time

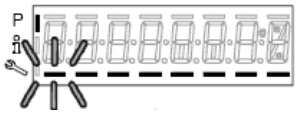

enter the password following the procedure on chapter “Programming LMV2x”.
Press ENTER until the display will show:

| | |
|---|---|
| ⚠ | **To copy the configuration from AZL2x to LMV. It is important that the type of LMV is the same (for example LMV20 with LMV20, etc.) and that 113 "Burner ID" of the burner is the same value that is saved in the configuration you want to copy.** |

With the buttons 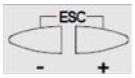

go to the group **100** of the parameters, press на 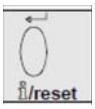

and always with the buttons **+** and **-** go to **113** parameter "Burner ID", press

and verify (and/or change with buttons by pressing enter to confirm)

iWith the buttons 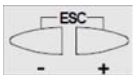

go to the group **000** of the parameters, press

end select the **050** parameter

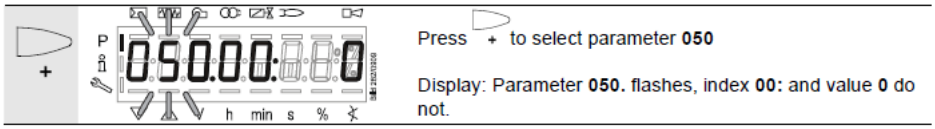


press

the disply show

with the button 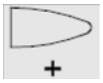

the display shows

press again

with the button **+** select **1** and start the restore process by pressing

.

After about 5 seconds the restore process ends and the display shows 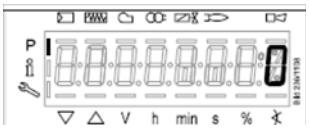

.
Now, LMV has the same configuration that was stored on AZL2x.

***ERROR CODE TABLE***

| Error code | Diagnostic code | Meaning for the LMV2x/3x... system | Remedy |
|---|---|---|---|
| **no Comm** | | **No communication between LMV26... basic unit and AZL2...** | Check wiring for line interruption/loose contact |
| **2** | **#** | **No flame at the end of safety time (TSA)** | |
| | *1* | *No flame at the end of safety time 1 (TSA1)* | |
| | *2* | *No flame at the end of safety time 2 (TSA2)* | |
| **3** | **#** | Air pressure failure | |
| | *0* | *Air pressure off* | |
| | *1* | *Air pressure on* | |
| | *4* | *Air pressure on – prevention of startup* | |
| | *20* | *Air pressure, combustion pressure – start prevention* | |
| | *68* | *Air pressure, POC – start prevention* | |
| | *84* | *Air pressure, combustion pressure, POC – start prevention* | |
| **4** | **#** | **Extraneous light** | |
| | *0* | *Extraneous light during startup* | |
| | *1* | *Extraneous light during shutdown* | |
| | *2* | *Extraneous light during startup – prevention of startup* | |
| | *6* | *Extraneous light during startup, air pressure – start prevention* | |
| | *18* | *Extraneous light during startup, combustion pressure – start prevention* | |
| | *24* | *Extraneous light during startup, air pressure, combustion pressure – start prevention* | |
| | *66* | *Extraneous light during startup, POC – start prevention* | |
| | *70* | *Extraneous light during startup, air pressure, POC – start prevention* | |
| | *82* | *Extraneous light during startup, combustion pressure, POC – start prevention* | |
| | *86* | *Extraneous light during startup, air pressure, combustion pressure, POC – start prevention* | |
| **7** | **#** | **Loss of flame** | |
| | *0* | *Loss of flame* | |
| | *3...255* | *Loss of flame due to TÜV test (loss-of-flame test)* | Diagnostics corresponds to the period of time from shutdown of fuel valves to the detection of loss of flame (resolution 0.2 s → Value 5 = 1 s) |

| Error code | Diagnostic code | Meaning for the LMV20... system | Remedy |
|---|---|---|---|
| **12** | **#** | **Valve proving** | |
| | *0* | *Fuel valve 1 (V1) leaking*<br>*(fuel valve 2 with valve proving via X5-01)* | With valve proving via X5-01 (gas pressure switch-min)<br>- Check if valve on the burner side is leaking<br>- Check if pressure switch for valve proving is closed, if gas pressure exist<br>- Check wiring for short-circuit |
| | *1* | *Fuel valve 2 (V2) leaking*<br>*(fuel valve 1 with valve proving via X5-01)* | With valve proving via X5-01 (gas pressure switch-min)<br>- Check if valve on the gas side is leaking<br>- Check wiring for short-circuit |
| | *2* | *Valve proving not possible* | Valve proving activated, but pressure switch-min selected as input function for X9-04 (check parameters 238 and 241) |
| | *3* | *Valve proving not possible* | Valve proving activated, but no input assigned (check parameters 236 and 237) |
| | *4* | *Valve proving not possible* | Valve proving activated, but 2 inputs assigned (set parameter 237 to pressure switch-max or POC) |
| | *5* | *Valve proving not possible* | Valve proving activated, but 2 inputs assigned (check parameters 236 and 237) |
| | *81* | *V1 leaking* | Check to see if the valve on the gas side is leaking<br>Check wiring to see if there is an open-circuit |
| | *83* | *V2 leaking* | Check to see if the valve on the burner side is leaking<br>Check to see if the pressure switch for the leakage test is closed when gas pressure is present<br>Check wiring for short-circuit |
| **14** | **#** | **POC** | |
| | *0* | *POC open* | Check to see if the valve's closing contact is closed |
| | *1* | *POC close* | Check wiring<br>Check to see if the valve's closing contact opens when valve is controlled |
| | *64* | *POC open - start prevention* | Check wiring to see if there is a line interruption.<br>Check to see if the valve's closing contact is closed |
| **19** | *80* | *Combustion pressure, POC – start prevention* | Check to see if pressure switch has closed with no combustion pressure present<br>Check wiring for short-circuit |
| **20** | **#** | **Pressure switch-min (Pmin)** | |
| | *0* | *No minimum gas /oil pressure* | Check wiring for open-circuit |
| | *1* | *Gas shortage – start prevention* | Check wiring for open-circuit |
| **21** | **#** | **Pressure switch-max / POC** | |
| | *0* | *Pressure switch-max: Max. gas / oil pressure exceeded*<br>*POC: POC open (software version ≤ V02.00)* | Check wiring to see if there is a line interruption.<br>POC: Check to see if the valve's closing contact is closed. |

| Error code | Diagnostic code | Meaning for the LMV2x/3x... system | Remedy |
|---|---|---|---|
| **22 OFF S** | **#** | **Safety loop / burner flange** | |
| | *0* | *Safety loop / burner flange open* | |
| | *1* | *Safety loop / burner flange open - prevention of startup* | |
| | *3* | *Safety loop/burner flange, extraneous light – start prevention* | |
| | *5* | *Safety loop/burner flange, air pressure – start prevention* | |
| | *17* | *Safety loop/burner flange, combustion pressure – start prevention* | |
| | *19* | *Safety loop/burner flange, extraneous light, combustion pressure – start prevention* | |
| | *21* | *Safety loop/burner flange, air pressure, combustion pressure – start prevention* | |
| | *23* | *Safety loop/burner flange, extraneous light, air pressure, combustion pressure – start prevention* | |
| | *65* | *Safety loop/burner flange, POC – start prevention* | |
| | *67* | *Safety loop/burner flange, extraneous light, POC – start prevention* | |
| | *69* | *Safety loop/burner flange, air pressure, POC – start prevention* | |
| | *71* | *Safety loop/burner flange, extraneous light, air pressure, POC – start prevention* | |
| | *81* | *Safety loop/burner flange, combustion pressure, POC – start prevention* | |
| | *83* | *Safety loop/burner flange, extraneous light, combustion pressure, POC – start prevention* | |
| | *85* | *Safety loop/burner flange, air pressure, combustion pressure, POC – start prevention* | |
| | *87* | *Safety loop/burner flange, extraneous light, air pressure, combustion pressure, POC – start prevention* | |
| **50** | **#** | **Internal error** | Make a reset; if error occurs repeatedly, replace the unit |
| **51** | **#** | **Internal error** | Make a reset; if error occurs repeatedly, replace the unit |
| **55** | **#** | **Internal error** | Make a reset; if error occurs repeatedly, replace the unit |
| **56** | **#** | **Internal error** | Make a reset; if error occurs repeatedly, replace the unit |
| **57** | **#** | **Internal error** | Make a reset; if error occurs repeatedly, replace the unit |

| Error code | Diagnostic code | Meaning for the LMV2x/3x... system | Remedy |
|---|---|---|---|
| **58** | **#** | **Internal error** | Make a reset; if error occurs repeatedly, replace the unit |
| **61 Fuel Chg** | **#** | **Fuel changeover** | |
| *Fuel Chg* | *0* | *Fuel 0* | No error - change to Fuel 0 |
| *Fuel Chg* | *1* | *Fuel 1* | No error - change to Fuel 1 |
| **62 Fuel Err** | **#** | **Invalid fuel signals / fuel information** | |
| *Fuel Err* | *0* | *Invalid fuel selection (Fuel 0 + 1 = 0)* | Check wiring to see if there is an open-circuit<br>Note<br>Curves cannot be set. |
| *Fuel Err* | *1* | *Different fuel selection between the µCs* | Make a reset; if error occurs repeatedly, replace the unit |
| *Fuel Err* | *2* | *Different fuel signals between the µCs* | Make a reset; if error occurs repeatedly, replace the unit |
| *Fuel Err* | *3* | *Invalid fuel selection (Fuel 0 + 1 = 1)* | Check wiring for short-circuit<br>Note<br>Curves cannot be set.<br>LMV26...: Optional press reset button >3 seconds. |
| **65** | **#** | **Internal error** | Make a reset; if error occurs repeatedly, replace the unit |
| **66** | **#** | **Internal error** | Make a reset; if error occurs repeatedly, replace the unit |
| **67** | **#** | **Internal error** | Make a reset; if error occurs repeatedly, replace the unit |
| **70** | **#** | **Internal error fuel-air ratio control: Position calculation modulating** | |
| | *23* | *Output invalid* | No valid output |
| | *26* | *Curvepoints undefined* | Adjust the curvepoints for all actuators |
| **71** | **#** | **Special position undefined** | |
| | *0* | *Home position* | Parameterize the home position for all actuators used |
| | *1* | *Prepurge position* | Parameterize the prepurge position for all actuators used |
| | *2* | *Postpurge position* | Parameterize the postpurge position for all actuators used |
| | *3* | *Ignition position* | Parameterize the ignition position for all actuators used |
| **72** | **#** | **Internal error fuel-air ratio control** | Make a reset; if error occurs repeatedly, replace the unit |
| **73** | **#** | **Internal error fuel-air ratio control: Position calculation multistep** | |
| | *23* | *Output invalid* | No valid output |
| | *26* | *Curvepoints undefined* | Adjust the curvepoints for all actuators |

| Error code | Diagnostic code | Meaning for the LMV2x/3x... system | Remedy |
|---|---|---|---|
| **75** | **#** | **Internal error fuel-air ratio control: Data clocking check** | |
| | *1* | *Current output different* | |
| | *2* | *Target output different* | |
| | *4* | *Target positions different* | |
| | *16* | *Different positions reached* | Can be caused by different standardized speeds (e.g. after restore of data set) when the VSD is activated → standardize again and check adjustment of the fuel-air ratio control system |
| **76** | **#** | **Internal error fuel-air ratio control** | Make a reset; if error occurs repeatedly, replace the unit |
| **80** | **#** | **Control range limitation of VSD** | Basic unit could not correct the difference in speed and reached a control range limit.<br>1. Basic unit is not standardized for this motor → repeat standardization.<br>**Caution!**<br>**Settings of fuel-air ratio control must be checked.**<br>2. Ramp time settings of the VSD are not shorter than those of the basic unit (parameters 522, 523).<br>3. Characteristic of the VSD is not linear. Configuration of the voltage input at the VSD must accord with that of the basic unit (parameter 645).<br>4. VSD does not follow quickly enough the changes of the basic unit. Check settings of the VSD (input filter, slippage compensation, hiding different speeds) |
| | *1* | *Control range limitation at the bottom* | VSD speed was too high |
| | *2* | *Control range limitation at the top* | VSD speed was too low |
| **81** | *1* | *Interrupt limitation speed input* | Too much electromagnetic interference on the sensor line<br>→ improve EMC |

| Error code | Diagnostic code | Meaning for the LMV2x/3x... system | Remedy |
|---|---|---|---|
| **82** | **#** | **Error during VSD's speed standardization** | |
| | *1* | *Timeout of standardization (VSD ramp down time too long)* | Timeout at the end of standardization during ramp down of the VSD<br>→ ramp time settings of the VSD are not shorter than those of the basic unit (parameter: 523) |
| | *2* | *Storage of standardized speed not successful* | Error during storage of the standardized speed<br>→ lock the basic unit, then reset it and repeat the standardization |
| | *3* | *Line interruption speed sensor* | Basic unit receives no pulses from the speed sensor:<br>1. Motor does not turn.<br>2. Speed sensor is not connected.<br>3. Speed sensor is not activated by the sensor disk (check distance) |
| | *4* | *Speed variation / VSD ramp up time too long / speed below minimum limit for standardization* | Motor has not reached a stable speed after ramp up.<br>1. Ramp time settings of the VSD are not shorter than those of the basic unit (parameters 522, 523).<br>2. Characteristic of the VSD is not linear. Configuration of the voltage input at the VSD must accord with that of the basic unit (parameter 645).<br>3. VSD does not follow quickly enough the changes of the basic unit. Check settings of the VSD (input filter, slippage compensation, hiding different speeds)<br>4. Speed of VSD lies below the minimum for standardization (650 1/min) |
| | *5* | *Wrong direction of rotation* | Motor's direction of rotation is wrong.<br>1. Motor turns indeed in the wrong direction<br>→ change parameterization of the direction of rotation or interchange 2 live conductors.<br>2. Sensor disk is fitted the wrong way<br>→ turn the sensor disk. |
| | *6* | *Unplausible sensor signals* | The required pulse pattern (60°, 120°, 180°) has not been correctly identified.<br>1. Speed sensor does not detect all tappets of the sensor disk<br>→ check distance<br>2. As the motor turns, other metal parts are detected also, in addition to the tappets → improve mounting.<br>3. Electromagnetic interference on the sensor lines<br>→ check cable routing, improve EMC |
| | *7* | *Invalid standardized speed* | The standardized speed measured does not lie in the permissible range<br>→ motor turns too slowly or too fast |
| | *15* | *Speed deviation µC1 + µC2* | The speeds of microcomputer 1 and 2 deviated too much. This can be caused by wrong standardized speeds (e.g. after restoring a data set to a new unit)<br>→ repeat standardization and check the fuel-air ratio |

| Error code | Diagnostic code | Meaning for the LMV2x/3x... system | Remedy |
|---|---|---|---|
| | *20* | *Wrong phase of phase manager* | Standardization was made in a wrong phase. Permitted are only phases ≤12 → controller OFF, start standardization again |
| | *21* | *Safety loop / burner flange open* | Safety loop or burner flange is open → repeat standardization with safety loop closed |
| | *22* | *Air actuator not referenced* | Air actuator has not been referenced or has lost its referencing.<br>1. Check if the reference position can be approached.<br>2. Check if actuators have been mixed up.<br>3. If error only occurs after the start of standardization, the actuator might be overloaded and cannot reach its destination. |
| | *23* | *VSD deactivated* | Standardization was started with VSD deactivated<br>→ activate the VSD and repeat standardization |
| | *24* | *No valid operating mode* | Standardization was started without valid operating mode<br>→ activate valid operating mode and repeat standardization |
| | *25* | *Pneumatic air-fuel ratio control* | Standardization was started with pneumatic air-fuel ratio control<br>→ standardization with pneumatic air-fuel ratio control not possible |
| | *128* | *Running command with no preceding standardization* | VSD is controlled but not standardized<br>→ make standardization |
| | *255* | *No standardized speed available* | Motor turns but is not standardized<br>→ make standardization |

| Error code | Diagnostic code | Meaning for the LMV2x/3x... system | Remedy |
|---|---|---|---|
| **83** | **#** | **Speed error VSD** | Required speed has not been reached |
| | *Bit 0*<br>*Valency 1* | *Lower control range limitation of control* | Speed has not been reached because control range limitation has become active<br>→ for measures, refer to error code 80 |
| | *Bit 1*<br>*Valency 2...3* | *Upper control range limitation of control* | Speed has not been reached because control range limitation has become active<br>→ for measures, refer to error code 80 |
| | *Bit 2*<br>*Valency 4...7* | *Interruption via disturbance pulses* | Speed has not been reached due to too much electromagnetic interference on the sensor line<br>→ for measures, refer to error code 81 |
| | *Bit 3*<br>*Valency ≥ 8* | *Curve too steep in terms of ramp speed* | Speed has not been reached because detected curve slope was too steep.<br>1. With a LMV26... ramp of 20 s, the curve's slope may be a maximum of 10% speed change between 2 curvepoints in modulating mode.<br>With a LMV26... ramp of 10 s, the curve's slope may be a maximum of 20% speed change between 2 curvepoints in modulating mode.<br>With a LMV26... ramp of 5 s, the curve's slope may be a maximum of 40% speed change between<br>2 curvepoints in modulating mode.<br>→ Between the ignition point (P0) and the low-fire point (P1), the speed change in modulating mode may be a maximum of 40%, independent of the LMV26... ramp.<br>2. The setting of the VSD ramp must be about 20% faster than the ramps in the basic unit (parameters 522, 523). |
| | *Bit 4*<br>*Valency ≥ 16* | *Interruption of speed signal* | No speed detected in spite of control.<br>1. Check if the motor turns.<br>2. Check if the speed sensor delivers a signal (LED / check distance from the sensor disk).<br>3. Check wiring of the VSD. |
| | *Bit 5*<br>*Valency ≥ 32* | *Quick shutdown due to excessive speed deviation* | Speed deviation was for about 1 s >10% outside the anticipated range.<br>1. Check ramp times of the LMV26... and VSD.<br>2. Check wiring of the VSD. |

| Error code | Diagnostic code | Meaning for the LMV2x/3x... system | Remedy |
|---|---|---|---|
| **84** | **#** | **Curve slope actuators** | |
| | *Bit 0*<br>*Valency 1* | *VSD: Curve too steep in terms of ramp speed* | 1. The curve's slope may be a maximum of 10% speed change between 2 curvepoints in modulating operation, with a LMV26... ramp of 20 seconds<br>The curve's slope may be a maximum of 20% speed change between 2 curvepoints in modulating operation, with a LMV26... ramp of 10 seconds<br>The curve's slope may be a maximum of 40% speed change between 2 curvepoints in modulating operation, with a LMV26... ramp of 5 seconds<br>→ Between the ignition point (P0) and the low-fire point (P1), the speed change in modulating mode may be a maximum of 40%, independent of the LMV26... ramp.<br>2. Setting of the VSD ramp must be about 20% shorter than the ramps in the basic unit (parameters 522 and 523) |
| | *Bit 1*<br>*Valency 2..3* | *Fuel actuator: Curve too steep in terms of ramp rate* | The slope of the curve may be a maximum position change of 31° between 2 curvepoints in modulating mode |
| | *Bit 2*<br>*Valency 4..7* | *Air actuator: Curve too steep in terms of ramp rate* | The slope of the curve may be a maximum position change of 31° between 2 curvepoints in modulating mode |
| **85** | **#** | *Referencing error ones actuators* | |
| | *0* | *Referencing error of fuel actuator* | Referencing of fuel actuator not successful.<br>Reference point could not be reached.<br>1. Check to see if actuators have been mixed up.<br>2. Check to see if actuator is locked or overloaded. |
| | *1* | *Referencing error of air actuator* | Referencing of fuel actuator not successful<br>Reference point could not be reached.<br>1. Check to see if actuators have been mixed up.<br>2. Check to see if actuator is locked or overloaded. |
| | *Bit 7*<br>*Valency ≥ 128* | *Referencing error due to parameter change* | Parameterization of an actuator (e.g. the reference position) has been changed.<br>To trigger new referencing, this error is set |
| **86** | **#** | **Error fuel actuator** | |
| | *0* | *Position error* | Target position could not be reached within the required tolerance band<br>→ check to see if actuator is locked or overloaded |
| | *Bit 0*<br>*Valency 1* | *Line interruption* | *Line interruption* detected at actuator's terminals<br>→ check wiring (voltage X54 across pin 5 or 6 and pin 2 >0.5 V) |
| | *Bit 3*<br>*Valency ≥8* | *Curve too steep in terms of ramp rate* | The slope of the curve may be a maximum position change of 31° between 2 curvepoints in modulating mode |
| | *Bit 4*<br>*Valency ≥ 16* | *Step deviation in comparison with last referencing* | Actuator was overloaded or mechanically twisted.<br>1. Check to see if the actuator is blocked somewhere along its working range.<br>2. Check to see if the torque is sufficient for the application. |

| Error code | Diagnostic code | Meaning for the LMV2x/3x... system | Remedy |
|---|---|---|---|
| **87** | **#** | **Error air actuator** | |
| | *0* | *Position error* | Target position could not be reached within the required tolerance band<br>→ check to see if actuator is locked or overloaded |
| | *Bit 0*<br>*Valency 1* | *Line interruption* | Line interruption detected at actuator's terminals<br>→ check wiring (voltage X53 across pin 5 or 6 and pin 2 >0.5 V) |
| | *Bit 3*<br>*Valency ≥ 8* | *Curve too steep in terms of ramp rate* | The slope of the curve may be a maximum position change of 31° between 2 curvepoints in modulating mode |
| | *Bit 4*<br>*Valency ≥ 16* | *Sectional deviation in comparison with last referencing* | Actuator was overloaded or mechanically twisted.<br>1. Check to see if the actuator is blocked somewhere along its working range.<br>2. Check to see if the torque is sufficient for the application. |
| **90** | **#** | **Internal error basic unit** | |
| **91** | **#** | **Internal error basic unit** | |
| **93** | **#** | **Error flame signal acquisition** | |
| | *3* | *Short-circuit of sensor* | Short-circuit at QRB...<br>1. Check wiring.<br>2. Flame detector possibly fault. |
| **95** | **#** | **Error relay supervision** | |
| | *3 Ignition transformer*<br>*4 Fuel valve 1*<br>*5 Fuel valve 2*<br>*6 Fuel valve 3* | *External power supply NO contact* | Check wiring |
| **96** | **#** | **Error relay supervision** | |
| | *3 Ignition transformer*<br>*4 Fuel valve 1*<br>*5 Fuel valve 2*<br>*6 Fuel valve 3* | *Relay contacts have welded* | Test the contacts:<br>1. Unit connected to power: Fan output must be dead.<br>2. Disconnect power: Disconnect fan. No resistive connection between fan output and neutral conductor allowed.<br>If one of the 2 tests fails, release the unit since contact have definitively welded and safety can no longer be ensured. |
| **97** | **#** | **Error relay supervision** | |
| | *0* | *Safety relay contacts have welded or external power supply fed to safety relay* | Test the contacts:<br>1. Unit connected to power: Fan output must be dead.<br>2. Disconnect power: Disconnect fan. No resistive connection between fan output and neutral conductor allowed.<br>If one of the 2 tests fails, release the unit since contacts have definitively welded and safety can no longer be ensured. |

| Error code | Diagnostic code | Meaning for the LMV2x/3x... system | Remedy |
|---|---|---|---|
| **98** | **#** | **Error relay supervision** | |
| | *2 Safety valve*<br>*3 Ignition transformer*<br>*4 Fuel valve 1*<br>*5 Fuel valve 2*<br>*6 Fuel valve 3* | *Relay does not pull in* | Make a reset; if error occurs repeatedly, replace the unit |
| **99** | **#** | **Internal error relay control** | Make a reset; if error occurs repeatedly, replace the unit |
| | *3* | *Internal error relay control* | Make a reset. If error occurs repeatedly, replace the unit<br>Software version V03.10: If error C:99 D:3 occurs during standardization of the VSD, deactivate temporarily function *Alarm in case of start prevention* (parameter number 210 = 0, when using a release contact) or *interrupt* the controller-ON signal |
| **100** | **#** | **Internal error relay control** | Make a reset; if error occurs repeatedly, replace the unit |
| **105** | **#** | **Internal error contact sampling** | |
| | *0 Pressure switch-min*<br>*1 Pressure switch-max / POC*<br>*2 Fuel selection 0 / Reset*<br>*3 Air pressure*<br>*4 Load controller open*<br>*5 Load controller on / off*<br>*6 Load controller close*<br>*7 Safety loop / Burner flange*<br>*8 Safety valve*<br>*9 Ignition transformer*<br>*10 Fuel valve 1*<br>*11 Fuel valve 2*<br>*12 Fuel valve 3*<br>*13 Fuel selection 1 / Reset* | *Stuck-At failure* | Can be caused by capacitive loads or supply of DC voltage to the mains voltage inputs. The diagnostic code indicates the input where the problem occurred |
| **106** | **#** | **Internal error contact request** | Make a reset; if error occurs repeatedly, replace the unit |
| **107** | **#** | **Internal error contact request** | Make a reset; if error occurs repeatedly, replace the unit |
| **108** | **#** | **Internal error contact request** | Make a reset; if error occurs repeatedly, replace the unit |
| **110** | **#** | **Internal error voltage monitor test** | Make a reset; if error occurs repeatedly, replace the unit |
| **111** | **#** | **Power failure** | Mains voltage to low<br>Exchange ratio diagnostics code → voltage value (230 V: 1.683) |
| **112** | *0* | *Mains voltage recovery* | Error code for triggering a reset on power restoration (no error) |
| **113** | **#** | **Internal error mains voltage supervision** | Make a reset; if error occurs repeatedly, replace the unit |
| **115** | **#** | **Internal error system counter** | |
| **116** | *0* | *Designed life time exceeded (250´000 startups)* | Warning threshold has been reached. The unit should be replaced |

| Error code | Diagnostic code | Meaning for the LMV2x/3x... system | Remedy |
|---|---|---|---|
| **117** | *0* | *Life time exceeded*<br>*Operation no longer allowed* | Switch-off threshold has been reached |
| **120** | *0* | *Interrupt limitation fuel meter input* | Too many disturbance pulses at the fuel meters input<br>→ Improve EMC |
| **121** | **#** | **Internal error EEPROM access** | Make a reset, repeat last parameterization / check. Restore the parameter set, if error occurs repeatedly, replace the unit |
| **122** | **#** | **Internal error EEPROM access** | Make a reset, repeat last parameterization / check. Restore the parameter set, if error occurs repeatedly, replace the unit |
| **123** | **#** | **Internal error EEPROM access** | Make a reset, repeat last parameterization / check. Restore the parameter set, if error occurs repeatedly, replace the unit |
| **124** | **#** | **Internal error EEPROM access** | Make a reset, repeat last parameterization / check. Restore the parameter set, if error occurs repeatedly, replace the unit |
| **125** | **#** | **Internal error EEPROM read access** | Make a reset, repeat last parameterization / check. If error occurs repeatedly, replace the unit |
| **126** | **#** | **Internal error EEPROM write access** | Make a reset, repeat last parameterization / check. If error occurs repeatedly, replace the unit |
| **127** | **#** | **Internal error EEPROM access** | Make a reset, repeat last parameterization / check. Restore the parameter set, if error occurs repeatedly, replace the unit |
| **128** | *0* | *Internal error EEPROM access - synchronization during initialization* | Make a reset; if error occurs repeatedly, replace the unit |
| **129** | **#** | **Internal error EEPROM access – command synchronization** | Make a reset, repeat last parameterization / check. If error occurs repeatedly, replace the unit |
| **130** | **#** | **Internal error EEPROM access - timeout** | Make a reset, repeat last parameterization / check. If error occurs repeatedly, replace the unit |
| **131** | **#** | **Internal error EEPROM access - page on abort** | Make a reset, repeat last parameterization / check. If error occurs repeatedly, replace the unit |
| **132** | **#** | **Internal error EEPROM register initialization** | Make a reset; if error occurs repeatedly, replace the unit |
| **133** | **#** | **Internal error EEPROM access – Request synchronization** | Make a reset, repeat last parameterization / check. If error occurs repeatedly, replace the unit |
| **134** | **#** | **Internal error EEPROM access – Request synchronization** | Make a reset, repeat last parameterization / check. If error occurs repeatedly, replace the unit |
| **135** | **#** | **Internal error EEPROM access – Request synchronization** | Make a reset, repeat last parameterization / check. If error occurs repeatedly, replace the unit |
| **136** | *1* | *Restore started* | Restore of a backup has been started (no error) |

| Error code | Diagnostic code | Meaning for the LMV2x/3x... system | Remedy |
|---|---|---|---|
| **137** | **#** | **Internal error – backup / restore** | |
| | *157 (-99)* | *Restore – ok, but backup < data set of current system* | Restore successful, but backup data record is smaller than in the current system |
| | *239 (-17)* | *Backup – storage of backup in AZL2... faulty* | Reset and repeat backup |
| | *240 (-16)* | *Restore – no backup in AZL2...* | No backup stored in AZL2... |
| | *241 (-15)* | *Restore – abortion due to unsuitable product no. (ASN)* | Backup has an unsuitable product no. (ASN) and must not be restored |
| | *242 (-14)* | *Backup – backup made is inconsistent* | Backup is faulty and cannot be transferred back |
| | *243 (-13)* | *Backup – data comparison between µCs faulty* | Reset and repeat backup |
| | *244 (-12)* | *Backup data are incompatible* | Backup data are incompatible with the current software version, restore not possible |
| | *245 (-11)* | *Access error to parameter Restore_Complete* | Reset and repeat backup |
| | *246 (-10)* | *Restore – timeout when storing in EEPROM* | Reset and repeat backup |
| | *247 (-9)* | *Data received are inconsistent* | Backup data record invalid, restore not possible |
| | *248 (-8)* | *Restore cannot at present be made* | Reset and repeat backup |
| | *249 (-7)* | *Restore – abortion due to unsuitable burner identification* | Backup has an unsuitable burner identification and must not be transferred to the unit |
| | *250 (-6)* | *Backup – CRC of one page is not correct* | Backup data record invalid, restore not possible |
| | *251 (-5)* | *Backup – burner identification is not defined* | Define burner identification and repeat backup |
| | *252 (-4)* | *After restore, pages still on ABORT* | Reset and repeat backup |
| | *253 (-3)* | *Restore cannot at present be made* | Reset and repeat backup |
| | *254 (-2)* | *Abortion due to transmission error* | Reset and repeat backup |
| | *255 (-1)* | *Abortion due to timeout during backup / restore* | Make a reset, check the connections and repeat backup / restore<br>In case of repeated backup timeout, the AZL2... does not yet support backup functionality |
| **146** | **#** | **Timeout building automation interface** | Refer to Modbus User Documentation (A7541) |
| | *1* | *Modbus timeout* | |
| | *2* | *reserved* | |

| Error code | Diagnostic code | Meaning for the LMV2x/3x... system | Remedy |
|---|---|---|---|
| **150** | **#** | **TÜV test** | |
| | *1 (-1)* | *Invalid phase* | TÜV test may only be started in phase 60 (operation) |
| | *2 (-2)* | *TÜV test default output too low* | TÜV test default output must not be smaller than the lower output limit |
| | *3 (-3)* | *TÜV test default output too high* | TÜV test default output must not be greater than the upper output limit |
| | *4 (-4)* | *Manual interruption* | No error: Manual abortion of TÜV test by user |
| | *5 (-5)* | *TÜV test timeout* | No loss of flame after shutdown of fuel valves<br>1. Check to see if there is extraneous light<br>2. Check wiring to see if there is a short-circuit<br>3. Check to see if valve is leaking |
| **165** | **#** | **Internal error** | |
| **166** | *0* | *Internal error watchdog reset* | |
| **167** | **#** | **Manual locking** | Unit has been manually locked (no error) |
| | *1* | *Manual locking by contact* | |
| | *2* | *Manual locking by AZL2...* | |
| | *3* | *Manual locking by PC tool* | |
| | *8* | *Manual locking by the AZL2...*<br>*Timeout / communication breakdown* | During a curve adjustment via the AZL2..., the timeout for menu operation has elapsed (setting via parameter 127), or communication between the LMV26... and the AZL2... has broken down |
| | *9* | *Manual locking by the PC tool*<br>*Communication breakdown* | During a curve adjustment via the ACS410, communication between the LMV26... and the ACS410 was interrupted for more than 30 seconds |
| | *33* | *Manual locking by the PC tool*<br>*Test of lockout* | PC tool made a reset attempt with an error-free system |
| **168** | **#** | **Internal error management** | Make a reset; if error occurs repeatedly, replace the unit |
| **169** | **#** | **Internal error management** | Make a reset; if error occurs repeatedly, replace the unit |
| **170** | **#** | **Internal error management** | Make a reset; if error occurs repeatedly, replace the unit |
| **171** | **#** | **Internal error management** | Make a reset; if error occurs repeatedly, replace the unit |
| **200 OFF** | **#** | **System error-free** | No error |

| Error code | Diagnostic code | Meaning for the LMV2x/3x... system | Remedy |
|---|---|---|---|
| **201 OFF UPr0** or **OFF UPr1** | **#** | **Prevention of startup** | Start prevention due to unparameterized unit<br>Go to error history, entry 702, for initial cause of the error with shutdown in connection with the first curve settings |
| | *Bit 0*<br>*Valency 1* | *No operating mode selected* | |
| | *Bit 1*<br>*Valency 2..3* | *No fuel train defined* | |
| | *Bit 2*<br>*Valency 4..7* | *No curves defined* | |
| | *Bit 3*<br>*Valency 8..15* | *Standardized speed undefined* | |
| | *Bit 4*<br>*Valency 16..31* | *Backup / restore was not possible* | |
| **202** | **#** | **Internal error operating mode selection** | Redefine the operating mode (parameter 201) |
| **203** | **#** | **Internal error** | Redefine the operating mode (parameter 201).<br>Make a reset; if error occurs repeatedly, replace the unit |
| **204** | **Phase number** | **Program stop** | Program stop is active (no error) |
| **205** | **#** | **Internal error** | Make a reset; if error occurs repeatedly, replace the unit |
| **206** | *0* | *Inadmissible combination of units (basic unit – AZL2...)* | |
| **207** | **#** | **Version compatibility basic unit – AZL2...** | |
| | *0* | *Basic unit version too old* | |
| | *1* | *AZL2... version too old* | |
| **208** | **#** | **Internal error** | Make a reset; if error occurs repeatedly, replace the unit |
| **209** | **#** | **Internal error** | Make a reset; if error occurs repeatedly, replace the unit |
| **210** | *0* | *Selected operating mode is not released for the basic unit* | Select a released operating mode for the basic unit |
| **240** | **#** | **Internal error** | Make a reset; if error occurs repeatedly, replace the unit |
| **245** | **#** | **Internal error** | Make a reset; if error occurs repeatedly, replace the unit |
| **250** | **#** | **Internal error** | Make a reset; if error occurs repeatedly, replace the unit |

## *WIRING DIAGRAM*

## *Wiring connection for LMV20*

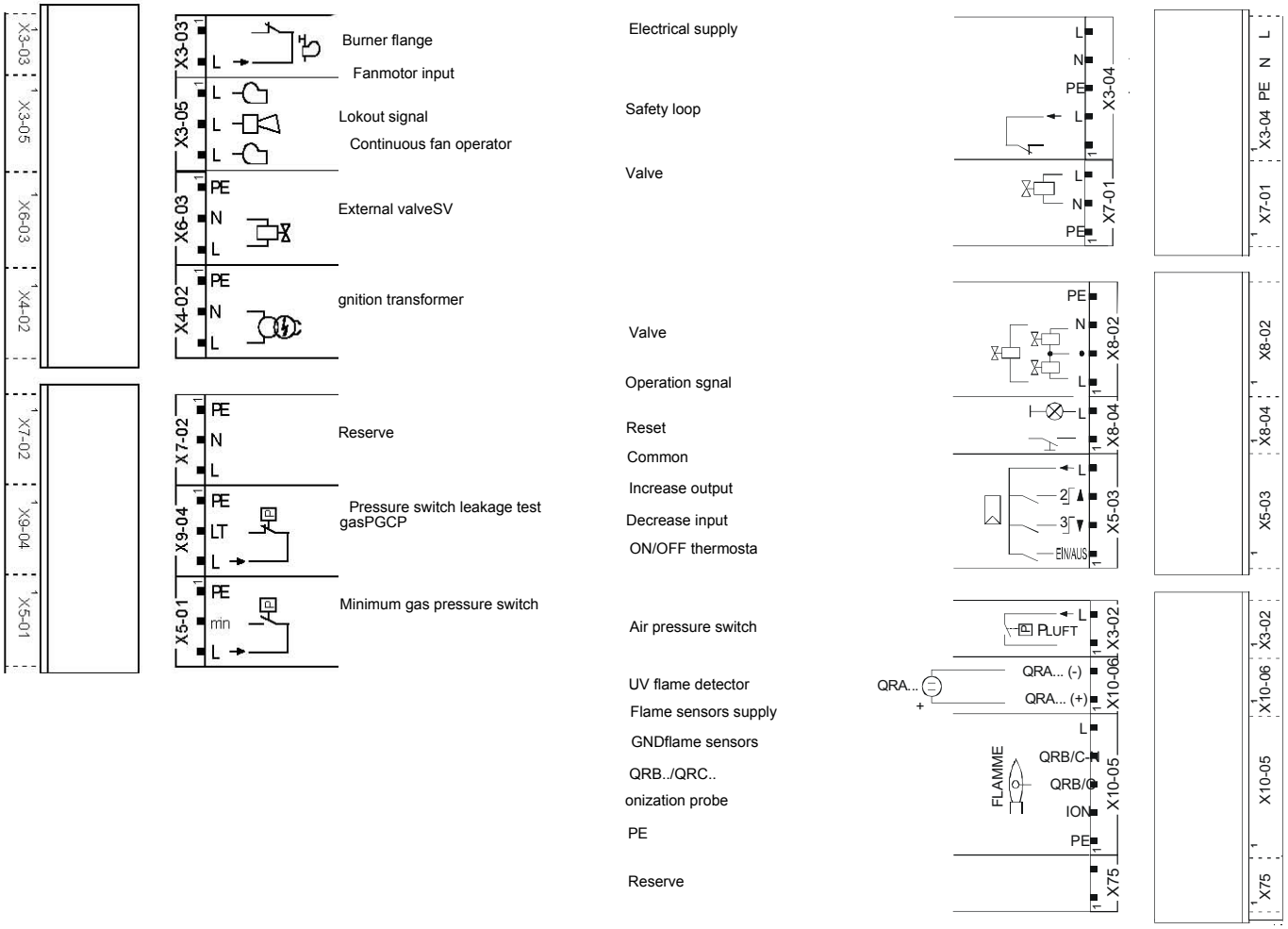


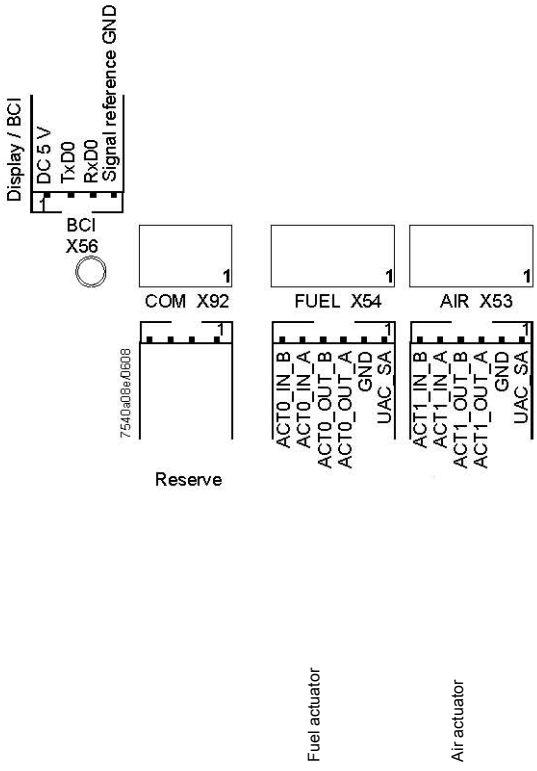

## *Wiring variants for LMV27*

**ConnectorX75**

2 - Fuel meter input

1 - Supply fuel meter

**ConnectorX5-02**

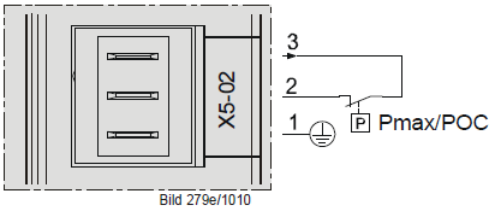


ConnectionsPmax

## *Wiring variants for LMV26*

### ConnectorX08-04 / X09-04

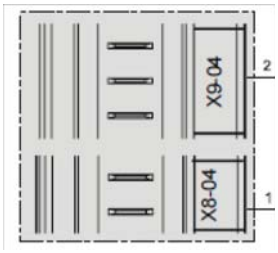


2 - Fuel 0

1 - Fuel1

### ConnectorX75

2 - Fuel meter input

1 - Supply fuel meter

### ConnectorX64

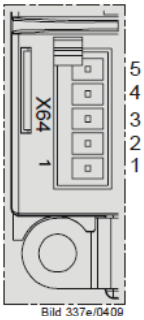


5 -Power supply speed sensor

4 -Speed sensor input

3 - PWM (Pulse Width Modulation) speed output

2 - GND (signal reference)

1 -Controller input (4÷20mA)

### ConnectorX74

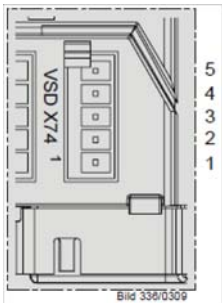


5 -Supply

4 -Feedback signal

3 - PWM (Pulse Width Modulation) speed output

2 - GND (signal reference)

1 -External supply 24V DC

## *Wiring variants for LMV37*

### ConnectorX75

2 - Fuel meter input

1 - Supply fuel meter

### ConnectorX5-02

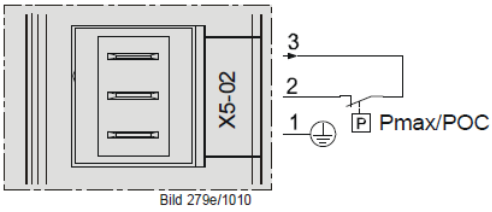


Connections Pmax

### ConnectorX64

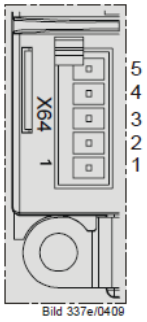


5 -Power supply speed sensor

4 -Speed sensor input

3 - PWM (Pulse Width Modulation) speed output

2 - GND (signal reference)

1 -Controller input (4÷20mA)

### ConnectorX74

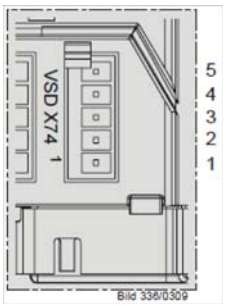


5 -Supply

4 -Feedback signal

3 - PWM (Pulse Width Modulation) speed output

2 - GND (signal reference)

1 -External supply 24V DC

C.I.B. UNIGAS S.p.A.
Via L.Galvani, 9 - 35011 Campodarsego (PD) - ITALY
Tel. +39 049 9200944 - Fax +39 049 9200945/9201269
web site: www.cibunigas.it - e-mail: cibunigas@cibunigas.it

*Note: Specifications and and data subject to change. Errors and omissions excepted.*

# CIB UNIGAS 600V

CONTROLLER

CE

## USER'S MANUAL

COD. M12925CA Rel 1.2 08/2014

SOFTWARE VERSION **1.0x T73**
code **80379** / Edition **01** - **06/2012**

## 1 • INSTALLATION

### • Dimensions and cut-out; panel mounting

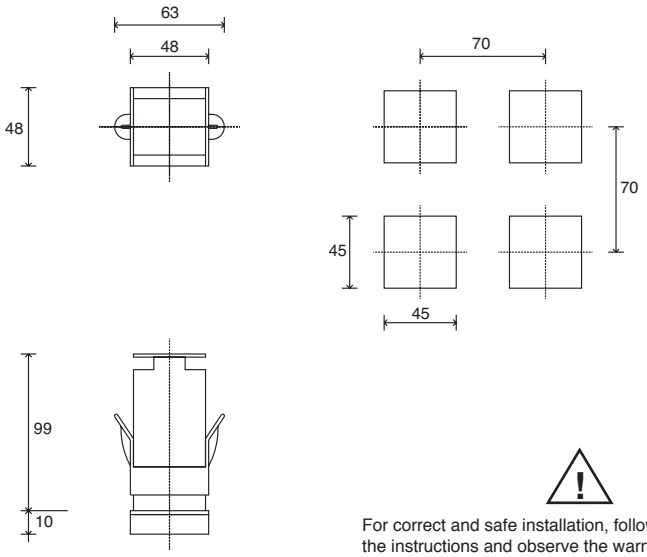


For correct and safe installation, follow the instructions and observe the warnings contained in this manual.

***Panel mounting:***

To fix the unit, insert the brackets provided into the seats on either side of the case.
To mount two or more units side by side, respect the cut-out dimensions shown in the drawing.

***CE MARKING:*** The instrument conforms to the European Directives 2004/108/CE and 2006/95/CE with reference to the generic standards: **EN 61000-6-2** (immunity in industrial environment) **EN 61000-6-3** (emission in residential environment) **EN 61010-1** (safety).

***MAINTENANCE:*** Repairs must be done only by trained and specialized personnel.
Cut power to the device before accessing internal parts.
Do not clean the case with hydrocarbon-based solvents (Petrol, Trichlorethylene, etc.). Use of these solvents can reduce the mechanical reliability of the device. Use a cloth dampened in ethyl alcohol or water to clean the external plastic case.

***SERVICE:*** GEFRAN has a service department. The warranty excludes defects caused by any use not conforming to these instructions.

EMC conformity has been tested with the following connections

| FUNCTION | CABLE TYPE | LENGTH |
|---|---|---|
| Power supply cable | 1 mm² | 1 m |
| Relay output cable | 1 mm² | 3,5 m |
| TC input | 0,8 mm² compensated | 5 m |
| Pt100 input | 1 mm² | 3 m |

## 2 • TECHNICAL SPECIFICATIONS

| | |
|---|---|
| *Display* | 2x4 digit green, high display 10 and 7mm |
| *Keys* | 4 of mechanical type (Man/Aut, INC, DEC, F) |
| *Accuracy* | 0.2% f.s. ±1 digit ambient temperature 25°C |
| *Main input (settable digital filter)* | TC, RTD, PTC, NTC<br>60mV,1V Ri≥1MΩ; 5V,10V Ri≥10KΩ; 20mA Ri=50Ω<br>Tempo di campionamento 120 msec. |
| *Type TC Thermocouples* (ITS90) | Type TC Thermocouples : J,K,R,S,T (IEC 584-1, CEI EN 60584-1, 60584-2) ; custom linearization is available / types B,E,N,L GOST,U,G,D,C are available by using the custom linearization. |
| *Cold junction error* | 0,1° / °C |
| *RTD type (scale configurable within indicated range, with or without decimal point)* (ITS90)<br>*Max line resistance for RTD* | DIN 43760 (Pt100), JPT100<br>20Ω |
| *PTC type / NTC Type* | 990Ω, 25°C / 1KΩ, 25°C |
| *Safety* | detection of short-circuit or opening of probes, LBA alarm |
| *°C / °F selection* | configurable from faceplate |
| *Linear scale ranges* | -1999 to 9999 with configurable decimal point position |
| *Controls* | PID, Self-tuning, on-off |
| *pb - dt - it* | 0,0...999,9 % - 0,00...99,99 min - 0,00...99,99 min |
| *Action* | Heat / Cool |
| *Control outputs* | on / off |
| *Maximum power limit heat / cool* | 0,0...100,0 % |
| *Cycle time* | 0...200 sec |
| *Main output type* | relay, logic, continuous (0...10V Rload ≥ 250KΩ, 0/4...20mA Rload ≤ 500Ω) |
| *Softstart* | 0,0...500,0 min |
| *Fault power setting* | -100,0...100,0 % |
| *Automatic blanking* | Displays PV value, optional exclusion |
| *Configurable alarms* | Up to 3 alarm functions assignable to an output, configurable as: maximum, minimum, symmetrical, absolute/deviation, LBA |
| *Alarm masking* | - exclusion during warm up<br>- latching reset from faceplate or external contact |
| *Type of relay contact* | NO (NC), 5A, 250V/30Vdc cosφ=1 |
| *Logic output for static relays* | 24V ±10% (10V min at 20mA) |
| *Transmitter power supply* | 15/24Vdc, max 30mA short-circuit protection |
| *Power supply (switching type)* | (std) 100 ... 240Vac ±10%<br>(opt.) 11...27Vac/dc ±10%;<br>50/60Hz, 8VA max |
| *Faceplate protection* | IP65 |
| *Working / Storage temperature range* | 0...50°C / -20...70°C |
| *Relative humidity* | 20 ... 85% non-condensing |
| *Environmental conditions of use* | for internal use only, altitude up to 2000m |
| *Installation* | Panel, plug-in from front |
| *Weight* | 160g for the complete version |

# 3 • DESCRIPTION OF FACEPLATE

*Function indicators*
Indicates modes of operation

L1 MAN/AUTO = OFF (automatic control)
ON (manual control)

L2 PRE-HEATING = ON (running)

L3 SELFTUNING = ON (enabled Self)
OFF (disabled Self)

*Automatic/Manual adjustment selection*
Active only when PV display visualises the process variable (button pressed for at least 5 sec.)

*Indication of output states*
OUT 1 (AL1); OUT 2 (OPEN); OUT 3 (CLOSED)

*PV Display*: Indication of process variable
Error Indication: LO, HI, Sbr, Err
***LO***= the value of process variable is < di LO_S
***HI***= the value of process variable is > di HI_S
***Sbr***= faulty sensor or input values higher than max. limits
***Err***= PT100 third wire opened for PT100, PTC or input values lower than min. limits (i.e.: TC wrong connection)

*SV display*: Indication of setpoint

*Function key*
Gives access to the various configuration phases •• Confirms change of set parameters and browses next or previous parameter (if Auto/Man key is pressed)

*"Inc" and "Dec" key*
Press to increment (decrement) any numerical parameter •• Increment (decrement) speed is proportional to time key stays pressed •• The operation is not cyclic: once the maximum (minimum) value of a field is reached, the value will not change even if the key remains pressed.

# 4 • CONNECTIONS

## • Outputs

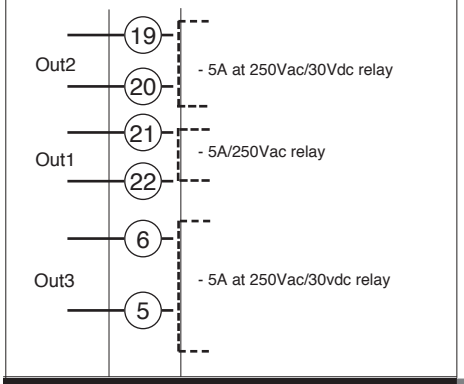


TOP

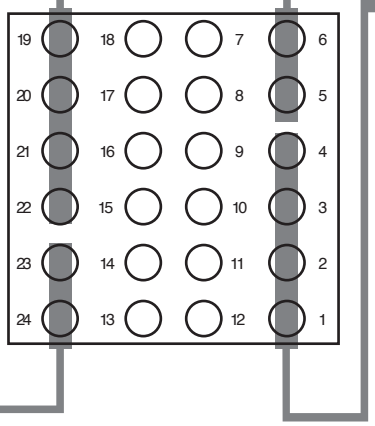


## • Power Supply

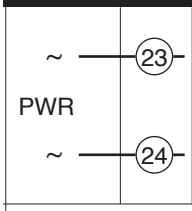


Standard:
100...240Vac ± 10%

Optional:
11...27Vac/Vdc ± 10%

Max. power 8VA; 50/60 Hz

## • Inputs

### • TC Input

Available thermocouples:
J, K, R, S, T
(B, E, N, L, U, G, D, C custom linearization is available)
- Observe polarities
- For extensions, use the correct compensating cable for the type of TC used

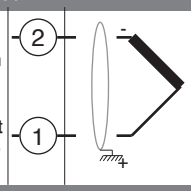


### • Linear input with 3-wire transmitter

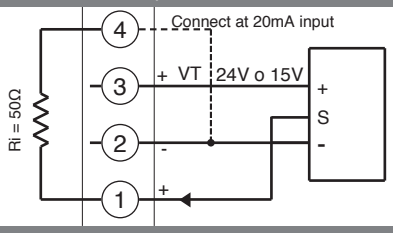


### • Linear input (I)

Linear input in dc current

20mA, Ri = 50Ω

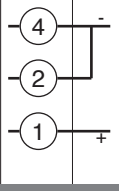


### • Input 1 linear with transmitter 2 wires

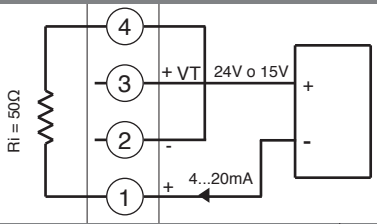


### • Linear input (V)

Linear input in dc voltage
60mV, 1V
Ri > 1MΩ
5V, 10V
Ri > 10KΩ

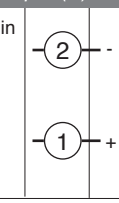


### • Pt100 / PTC / NTC

Use wires of adequate diameter (min. 1mm²)
PT100, JPT100, PTC, NTC

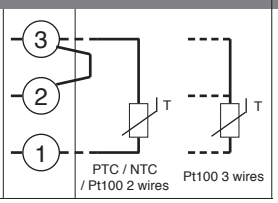


### • Identification of boards

Power board - Solder side

Select transmitter voltage

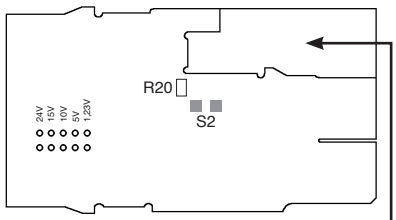


**N.B**. : you can keep the **OUT1** relay energized at power-up by inserting jumper **S2** and removing resistance **R20**.

CPU board - Component side

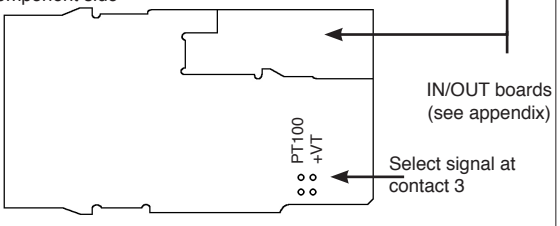


IN/OUT boards (see appendix)

Select signal at contact 3

### • Device structure

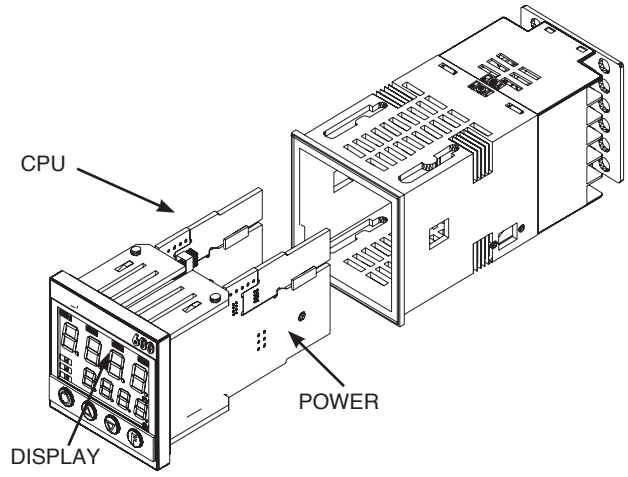

# 5 • "EASY" PROGRAMMING and CONFIGURATION

THE EASY CONFIGURATION (Pro=0...12) IS SUITABLE FOR VERSIONS WITH AL1/OPEN/CLOSED

S4 Jumper (CPU) ON

**LEVEL 1 MENU**

| | |
|---|---|
| P.V. / S.V. | P.V. / S.V. Process variable (PV display) Work Setpoint (SV display) or control output value with controller in manual |
| _SP | Local Setpoint (scale points Lo.L...Hi.L) |
| HY.P | Positive hysteresis alarm 1 (0 ... +999 scale points) |
| HY.n | Negative hysteresis alarm 1 (0 ... -999 scale points) |

PAS — Password

PAS = 99

Pro — Protection code

## • Prot

**12** — *Pro* — Protection code

| Prot | Display | Modification |
|---|---|---|
| 0 | SP, Hy.P, Hy.n | SP, Hy.P , Hy.n |
| 1 | SP, Hy.P, Hy.n | SP |
| 2 | SP | |

+ 4 to disable InP, Out
+ 8 to disable CFG

# 6 • PROGRAMMING and CONFIGURATION

**LEVEL 1 MENU**

| | | |
|---|---|---|
| | P.V. / S.V. | P.V. / S.V. Process variable (PV display) Work Setpoint (SV display) or control output value with controller in manual |
| 80.0 | _SP | Local Setpoint (Lo.L ... Hi.L) |
| +5.0 | HY.P | Positive hysteresis alarm 1 (0 ... +999 scale points) |
| -5.0 | HY.n | Negative hysteresis alarm 1 (0 ... +999 scale points) |
| | P.oS | Valve position indication (0.0 ... 100.0 %) (*) |
| | Ou.P | Control output value (*) |

(*) The automatic return *PV/SV* display is disabled for these displays

If Inc, Dec, F keys are not pressed within 15 sec, display returns automatically to P.V. value.

INF — Information display

NO — S4 Jumper (CPU) = ON

CFG — Custom menu

InP — Input settings

Out — Output settings

PAS — Password

NO — PAS = 99

Pro — Protection code

Hrd — Hardware configuration

Lin — Input linearization

U.CA — User calibration

Keep the F key pressed to scroll the menus

Release the F key to select the displayed menu

Press the F key to access the parameters

Keep the F key pressed to exit any menu

Keep F + Auto/Man keys pressed for 2 sec. on any menu to go immediately to level 1 display

Pressing the Auto/Man + F keys on any menu immediately returns you to the previous parameter.

**N.B.: Once a particular configuration is entered, all unnecessary parameters are no longer displayed**

## • InFo Display

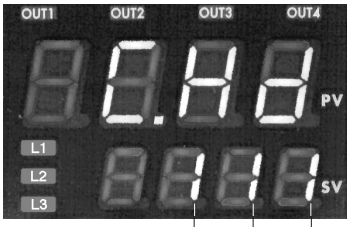


| OUTPUT 2 | OUTPUT 3 | SERIAL COMMUNICATION |
|---|---|---|
| 0 = None<br>1 = Relay | 0 = None<br>1 = Relay | 0 = None |

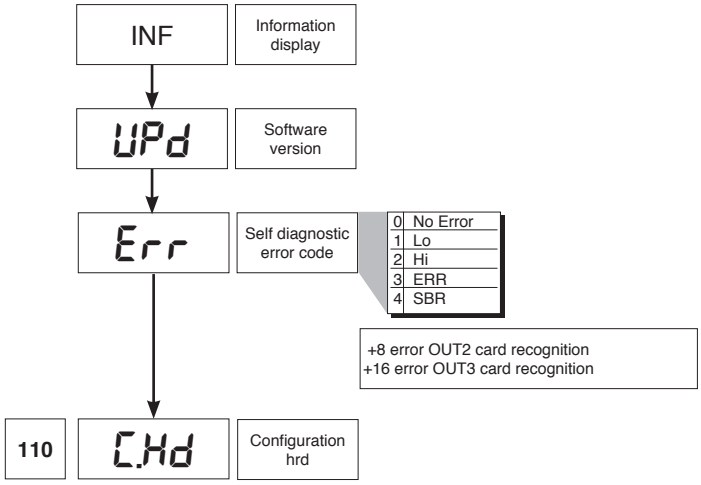


## • CFG

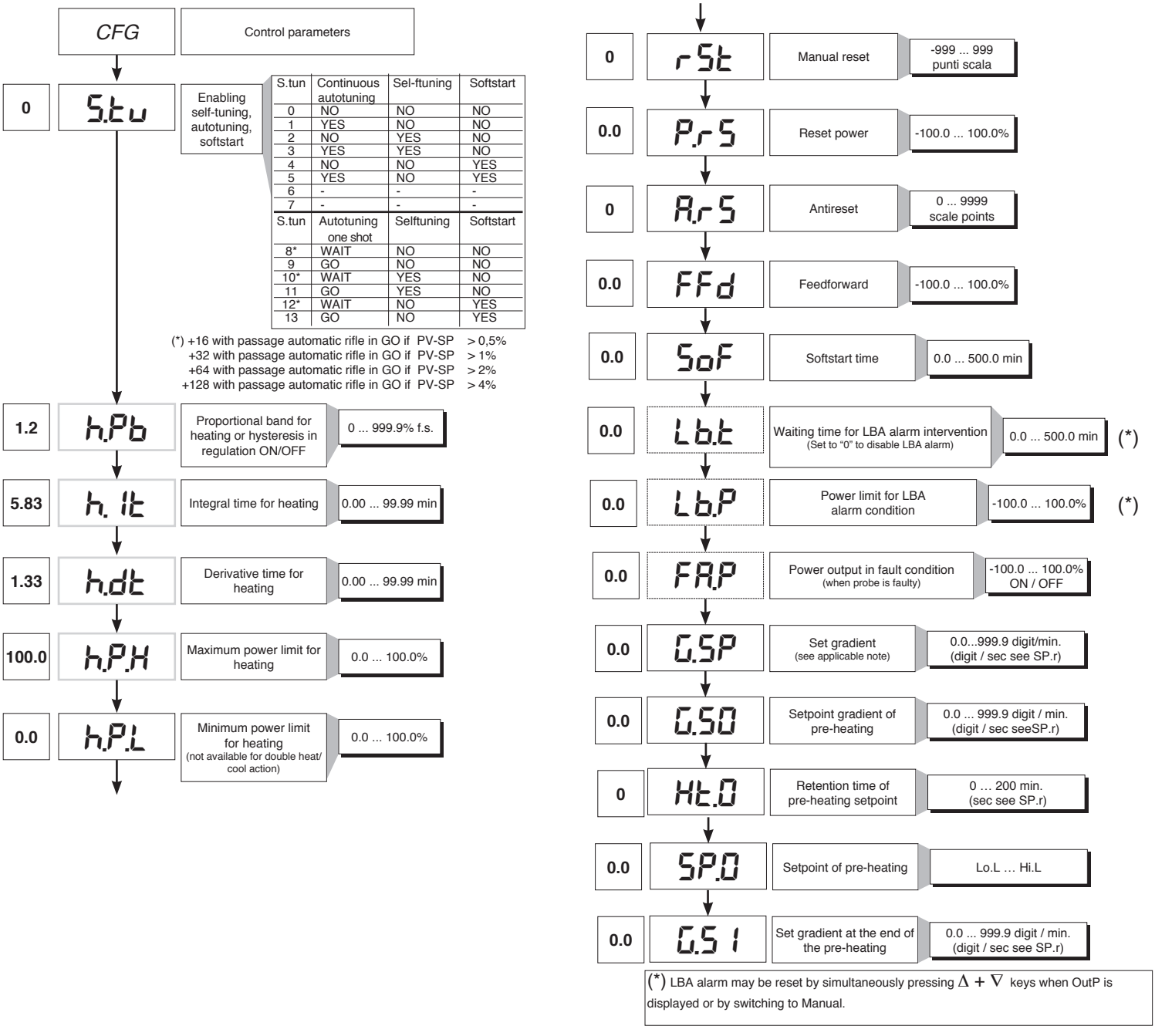

# • InP

InP — Input settings

**0** — SP.r — Def. remote setpoint — 0 default (remote setpoint present)

+2 Times of pre-heating and gradients of set digit/sec

**30** — tYP. — Probe type, signal, enable custom linearization, and main input scale

| Type | Probe type | without decimal point | with decimal point |
|---|---|---|---|
| | Sensore: | TC | |
| 0 | TC J °C | 0/1000 | 0.0/999.9 |
| 1 | TC J °F | 32/1832 | 32.0/999.9 |
| 2 | TC K °C | 0/1300 | 0.0/999.9 |
| 3 | TC K °F | 32/2372 | 32.0/999.9 |
| 4 | TC R °C | 0/1750 | 0.0/999.9 |
| 5 | TC R °F | 32/3182 | 32.0/999.9 |
| 6 | TC S °C | 0/1750 | 0.0/999.9 |
| 7 | TC S ° F | 32/3182 | 32.0/999.9 |
| 8 | TC T °C | -200/400 | -199.9/400.0 |
| 9 | TC T °F | -328/752 | -199.9/752.0 |
| 28 | TC | CUSTOM | CUSTOM |
| 29 | TC | CUSTOM | CUSTOM |
| 30 | PT100 °C | -200/850 | -199.9/850.0 |
| 31 | PT100 °F | -328/156 2 | -199.9/999.9 |
| 32 | JPT100 °C | -200/600 | -199.9/600.0 |
| 33 | JPT100 °F | -328/1112 | -199.9/999.9 |
| 34 | PTC °C | -55/120 | -55.0/120.0 |
| 35 | PTC °F | -67/248 | -67.0/248.0 |
| 36 | NTC °C | -10/70 | -10.0/70.0 |
| 37 | NTC °F | 14/158 | 14.0/158.0 |
| 38 | 0...60 mV | -1999/9999 | -199.9/999.9 |
| 39 | 0...60 mV | Custom scale | Custom scale |
| 40 | 12...60 mV | -1999/9999 | -199.9/999.9 |
| 41 | 12...60 mV | Custom scale | Custom scale |
| 42 | 0...20 mA | -1999/9999 | -199.9/999.9 |
| 43 | 0...20 mA | Custom scale | Custom scale |
| 44 | 4...20 mA | -1999/9999 | -199.9/999.9 |
| 45 | 4...20 mA | Custom scale | Custom scale |
| 46 | 0...10 V | -1999/9999 | -199.9/999.9 |
| 47 | 0...10 V | Custom scale | Custom scale |
| 48 | 2...10 V | -1999/9999 | -199.9/999.9 |
| 49 | 2...10 V | Custom scale | Custom scale |
| 50 | 0...5 V | -1999/9999 | -199.9/999.9 |
| 51 | 0...5 V | Custom scale | Custom scale |
| 52 | 1...5 V | -1999/9999 | -199.9/999.9 |
| 53 | 1...5 V | Custom scale | Custom scale |
| 54 | 0...1 V | -1999/9999 | -199.9/999.9 |
| 55 | 0...1 V | Custom scale | Custom scale |
| 56 | 200mv..1V | -1999/9999 | -199.9/999.9 |
| 57 | 200mv..1V | Custom scale | Custom scale |
| 58 | Cust10 V-20mA | -1999/9999 | -199.9/999.9 |
| 59 | Cust10 V-20mA | Custom scale | Custom scale |
| 60 | Cust 60mV | -1999/9999 | -199.9/999.9 |
| 61 | Cust 60mV | Custom scale | Custom scale |
| 62 | PT100-JPT | CUSTOM | CUSTOM |
| 63 | PTC | CUSTOM | CUSTOM |
| 64 | NTC | CUSTOM | CUSTOM |

For custom linearization:
- LO signal is generated with variable below Lo.S or at minimum calibration value
- HI signal is generated with variable above Lo.S or at maximum calibration value

Max. non-linearity error for thermocouples (TC), resistors (PT100) and thermistors (PTC, NTC).

The error is calculated as deviation from theoretical value and is expressed as percentage of full scale (in °C).

**S, R** range 0...1750°C; error < 0.2% f.s. (t > 300°C) / for other range; error < 0.5% f.s.
**T** error < 0.2% f.s. (t > -150°C)
**B** range 44...1800°C; error < 0.5% f.s. (t > 300°C) / range 44,0...999,9; error < 1% f.s. (t > 300°C)
**U** range -99,9...99,9 and -99...99°C; error < 0.5% f.s. / for other range; error < 0.2% f.s. (t > -150°C)
**G** error < 0.2% f.s. (t > 300°C)
**D** error < 0.2% f.s. (t > 200°C)
**C** range 0...2300; error < 0.2% f.s. / for other range; error < 0.5% f.s.

**NTC** error < 0.5% f.s.

Tc: **J, K, E, N, L** error < 0,2% f.s.
**JPT100** and **PTC** error < 0,2% f.s.
**PT100** scale -200...850°C
Precision better than 0,2% f.s. at 25°C
In range 0...50°C:
- Precision better than 0,2% f.s. in range -200...400°C
- Precision better than 0,4% f.s. in range +400...850°C

(where f.s. refers to range -200... +850°C)

**0.1** — FLt — Digital filter on input (if = 0 excludes averaging filter on sample value) — 0.0 ... 20.0 sec

**0.5** — FLd — Digital filter on input display — 0 ... 9.9 scale points

**1** — dP.S — Decimal point position for input scale

| dP_S | Format |
|---|---|
| 0 | xxxx |
| 1 | xxx.x |
| 2 | xx.xx (*) |
| 3 | x.xxx (*) |

(*) not available for TC, RTD, PTC and NTC scales

**0.0** — Lo.S — Minimum limit of main input scale — min...max input range selected in tyP

**850.0** — Hi.S — Maximum limit of main input scale — min...max input range selected in tyP

**0** — oFS. — Offset correction of main input — -999 ... 999 scale points

**30.0** — LoL — Lower limit for setting SP and absolute alarms — Lo.S ... Hi.S

**130.0** — HiL — Upper limit for setting SP and absolute alarms — Lo.S ... Hi.S

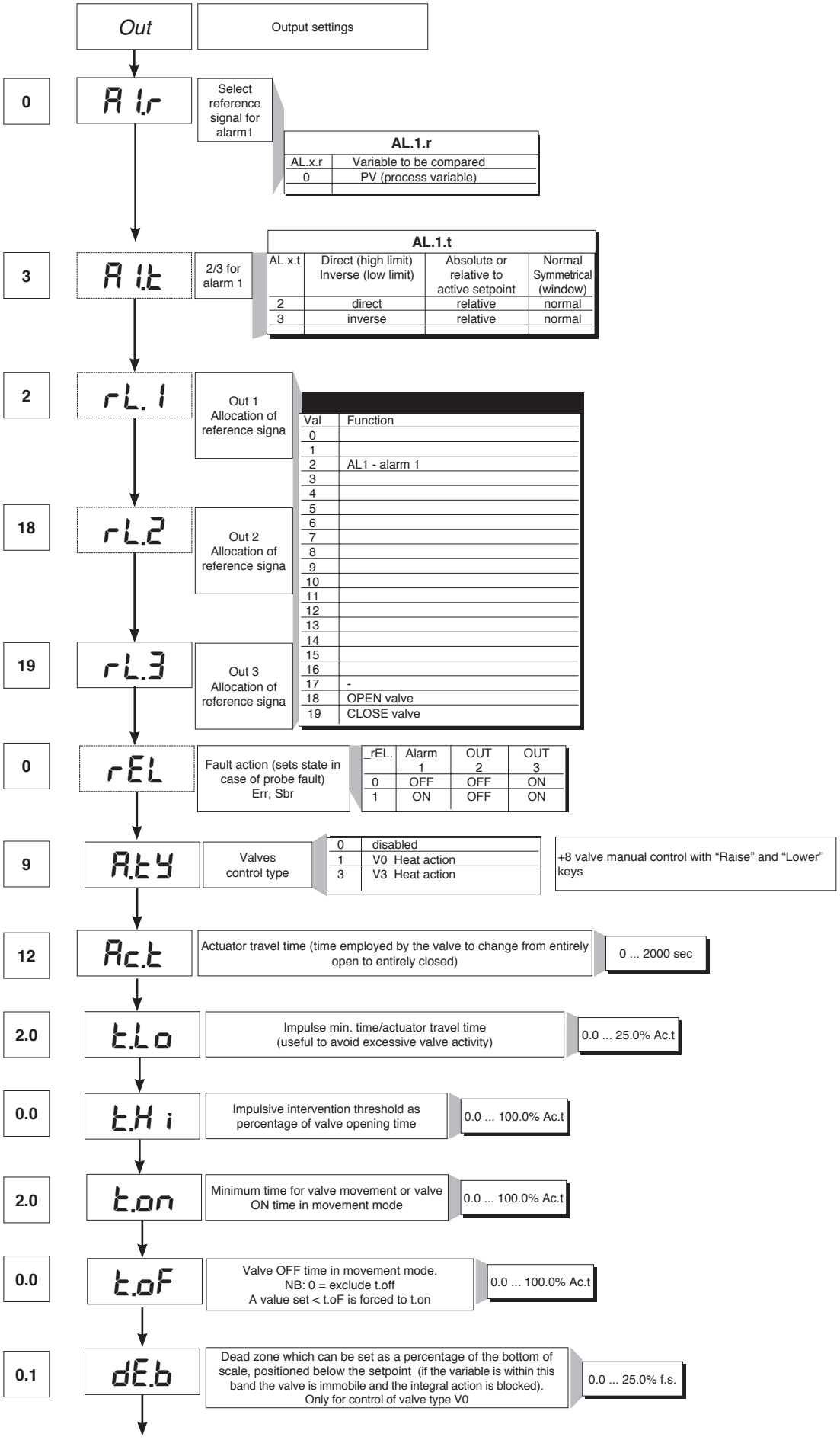
Out
Output settings
0
A 1.r
Select reference signal for alarm1
AL.1.r
AL.x.r
Variable to be compared
0
PV (process variable)
3
A 1.t
2/3 for alarm 1
AL.1.t
AL.x.t
Direct (high limit) Inverse (low limit)
Absolute or relative to active setpoint
Normal Symmetrical (window)
2
direct
relative
normal
3
inverse
relative
normal
2
rL. 1
Out 1 Allocation of reference signa
18
rL.2
Out 2 Allocation of reference signa
19
rL.3
Out 3 Allocation of reference signa
Val
Function
0
1
2
AL1 - alarm 1
3
4
5
6
7
8
9
10
11
12
13
14
15
16
17
-
18
OPEN valve
19
CLOSE valve
0
rEL
Fault action (sets state in case of probe fault) Err, Sbr
_rEL.
Alarm 1
OUT 2
OUT 3
0
OFF
OFF
ON
1
ON
OFF
ON
9
A.tY
Valves control type
0
disabled
1
V0 Heat action
3
V3 Heat action
+8 valve manual control with “Raise” and “Lower” keys
12
Ac.t
Actuator travel time (time employed by the valve to change from entirely open to entirely closed)
0 ... 2000 sec
2.0
t.Lo
Impulse min. time/actuator travel time (useful to avoid excessive valve activity)
0.0 ... 25.0% Ac.t
0.0
t.Hi
Impulsive intervention threshold as percentage of valve opening time
0.0 ... 100.0% Ac.t
2.0
t.on
Minimum time for valve movement or valve ON time in movement mode
0.0 ... 100.0% Ac.t
0.0
t.oF
Valve OFF time in movement mode.
NB: 0 = exclude t.off
A value set < t.oF is forced to t.on
0.0 ... 100.0% Ac.t
0.1
dE.b
Dead zone which can be set as a percentage of the bottom of scale, positioned below the setpoint (if the variable is within this band the valve is immobile and the integral action is blocked).
Only for control of valve type V0
0.0 ... 25.0% f.s.

## • Prot

**12** — *Pro* — Protection code

| Prot | Display | Modification |
|---|---|---|
| 0 | SP, Hy.P, Hy.n, AL.2, AL.3, PoS, OuP, INF | SP, Hy.P , Hy.n, AL.2, AL.3, PoS |
| 1 | SP, Hy.P, Hy.n, AL.2, AL.3, PoS, OuP, INF | SP |
| 2 | SP, OuP, INF | |

+ 4 to disable InP, Out
+ 8 to disable CFG
+ 16 to disable SW “power-up - power down”
+ 32 disable manual power latching
+ 64 to disable manual power modification
+128 enables full configuration

Note: OuP and INF only display configuration extended

## • Hrd

*Hrd* — Hardware configuration

**0** — *hd.1* — Enable multiset instrument control by serial

**6** — *Ctr* — Control type

| Val | Control type |
|---|---|
| 0 | P heat |
| 1 | |
| 2 | |
| 3 | PI heat |
| 4 | |
| 5 | |
| 6 | PID heat |
| 7 | |
| 8 | |
| 9 | ON-OFF heat |
| 10 | |
| 11 | |
| 12 | |
| 13 | |
| 14 | |

Selection of derivative action sampling time:
+ 0 sample 1 sec.
+ 16 sample 4 sec.
+ 32 sample 8 sec.
+ 64 sample 240 msec.

Note: LbA alarm is not enabled with ON/OFF type control

**1** — *AL.n* — Select number of enabled alarms

| AL.nr | Alarme1 | Alarm 2 | Alarm 3 |
|---|---|---|---|
| 1 | enabled | disabled | disabled |

**1** — *but.* — Function of M/A keys

| butt | |
|---|---|
| 0 | No function (key disenabled)) |
| 1 | MAN / AUTO controller |
| 2 | |
| 3 | HOLD |
| 4 | |
| 5 | |
| 6 | Start/Stop selftuning |
| 7 | Start/Stop autotuning |
| 8 | |

+ 16 disables the “back menu” function (Auto/Man + F keys) in the configuration menus

**0** — *dSP* — Defining SV display function

| diSP | Lower display (SV) function |
|---|---|
| 0 | SSP - setpoint enabled |
| 1 | PoS - valve position |
| 2 | Control output value |
| 3 | Deviation (SSP - PV) |

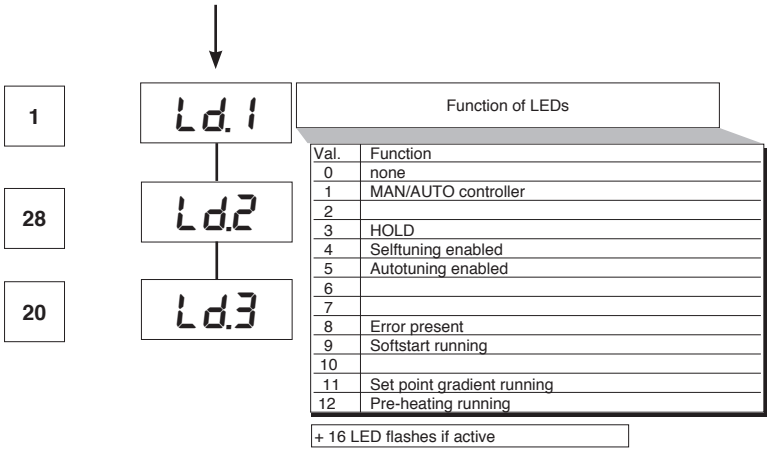


| Val. | Function |
|---|---|
| 0 | none |
| 1 | MAN/AUTO controller |
| 2 | |
| 3 | HOLD |
| 4 | Selftuning enabled |
| 5 | Autotuning enabled |
| 6 | |
| 7 | |
| 8 | Error present |
| 9 | Softstart running |
| 10 | |
| 11 | Set point gradient running |
| 12 | Pre-heating running |

+ 16 LED flashes if active

## • Lin

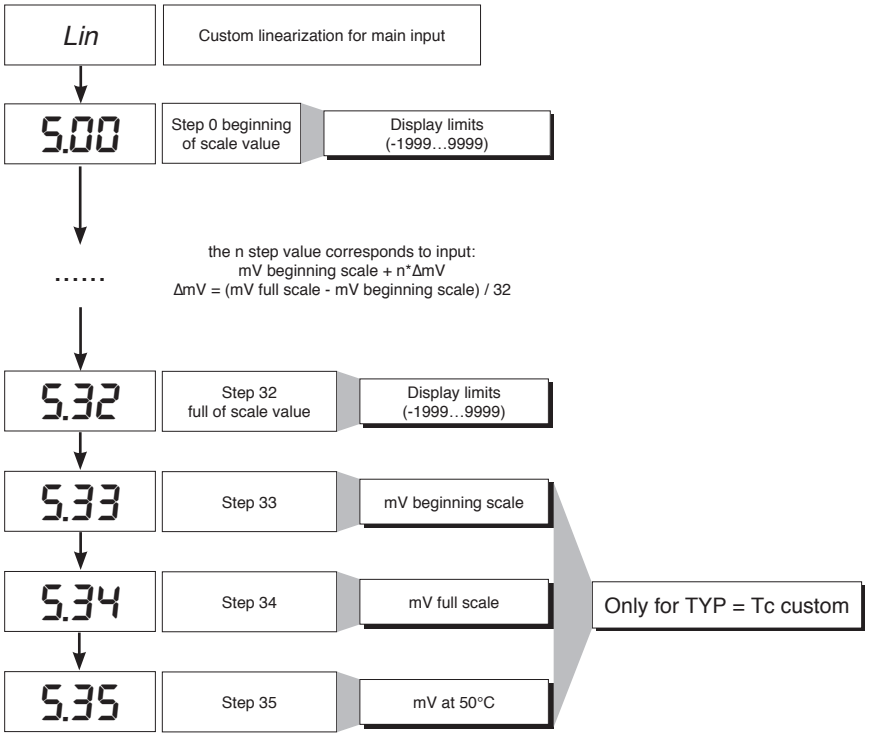


## • U.CAL

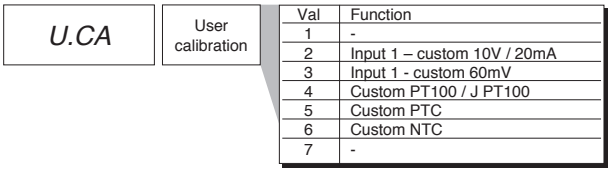


| Val | Function |
|---|---|
| 1 | - |
| 2 | Input 1 – custom 10V / 20mA |
| 3 | Input 1 - custom 60mV |
| 4 | Custom PT100 / J PT100 |
| 5 | Custom PTC |
| 6 | Custom NTC |
| 7 | - |

## 7 • CONSENT FOR BURNER AL1

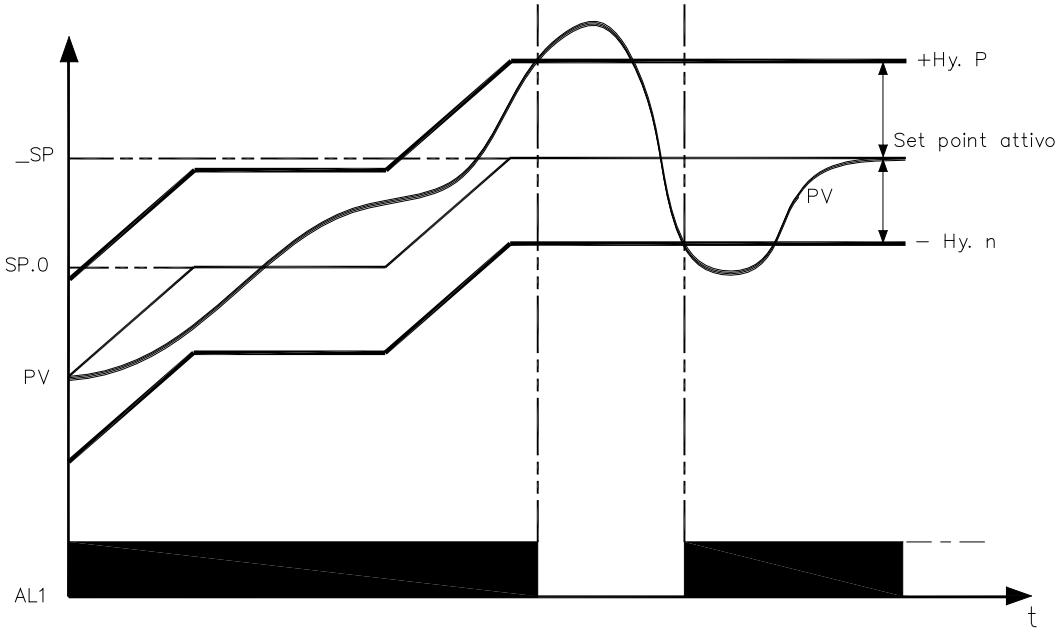


Obtain burner consent by configuring alarm 1 as inverse deviation with positive hysteresis Hy.P and negative hysteresis Hy.n

## 8 • PRE-HEATING FUNCTION

Enable the pre-heating function by setting parameters GS.0, Ht.0, GS.1 other than zero.
It consists of three phases that are activated sequentially at firing:

- **Ramp 0 phase**
  Enabled by setting GS.0 > 0. Starting from setpoint = PV (initial state), it reaches pre-heating set SP.0 with gradient GS.0
- **Maintenance phase**
  Enabled by setting Ht.0 > 0. Maintains pre-heating setpoint SP.0 for time Ht.0
- **Ramp 1 phase**
  Enabled by setting GS.1 > 0. Starting from pre-heating setpoint SP.0, it reaches active _SP set with gradient GS.1

In case of selftuning, the pre-heating function is not activated

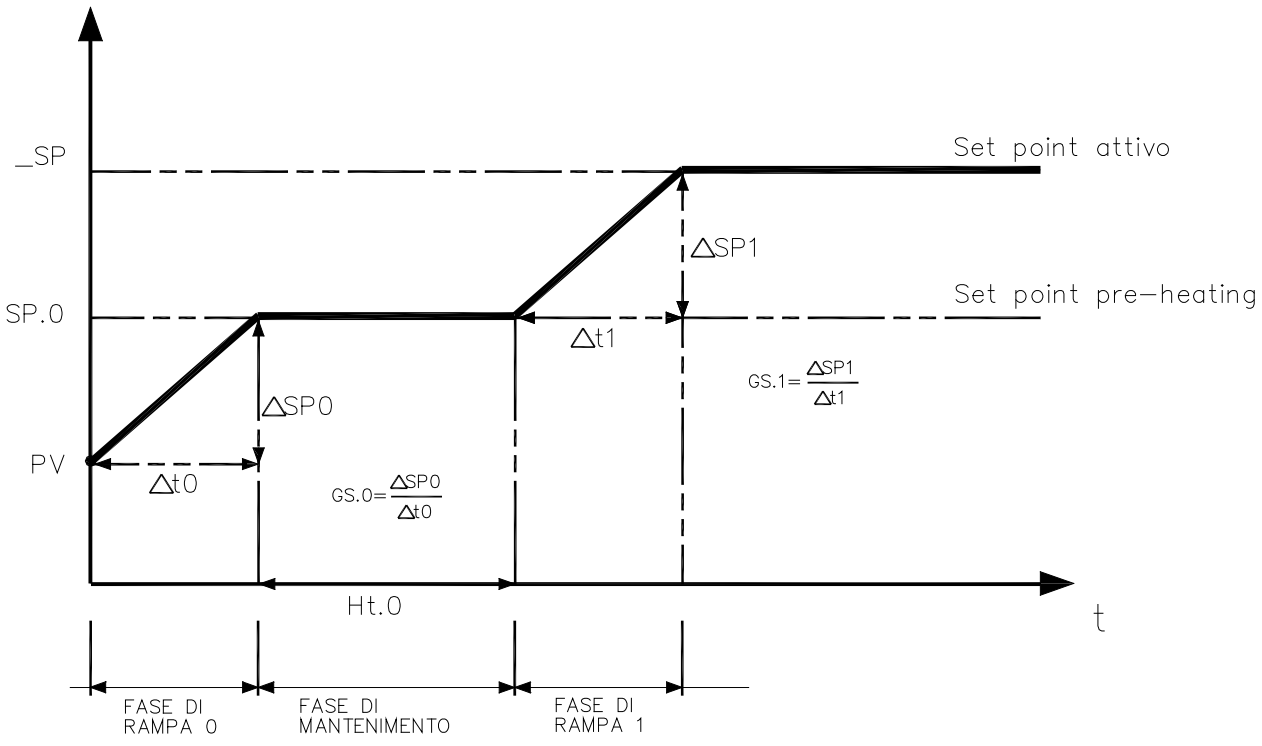

# 9 • ADJUSTMENT WITH MOTORIZED VALVE

In an adjustment process the adjustment valve has the function of varying fuel delivery (frequently corresponding to the thermal energy introduced into the process) in relation to the signal coming from the controller.
For this purpose it is provided with an actuator able to modify its opening value, overcoming the resistances produced by the fluid passing inside it.
The adjustment valves vary the delivery in a modulated manner, producing finite variations in the fluid passage inner area corresponding to finite variations of the actuator input signal, coming from the controller. The servomechanism, for example, comprises an electric motor, a reducer and a mechanical transmission system which actions the valve.
Various auxiliary components can be present such as the mechanical and electrical safety end travels, manual actioning systems.

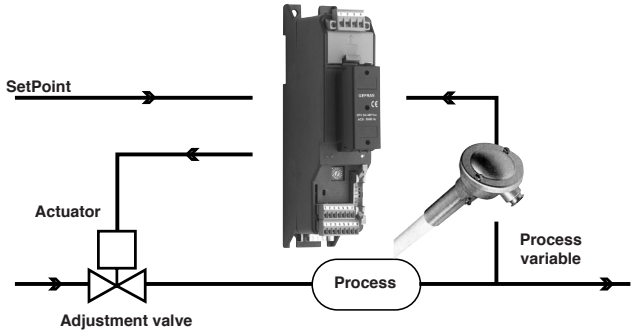


**CONTROL EXAMPLE FOR V0 VALVE**

The controller determines, on the basis of the dynamics of the process, the control output for the valve corresponding to the opening of the same in such a way so as to maintain the desired value of the process variable.

## Characteristic parameters for valves control

- Actuator time (Ac.t) is the time employed by the valve to pass from entirely open to entirely closed (or vice-versa), and can be set with a resolution of one second. It is a mechanical feature of the valve+actuator unit.
**NOTE**: if the actuator's travel is mechanically limited it is necessary to proportionally reduce the Ac.t value.

- Minimum impulse (t.Lo) expressed as a % of the actuator time (resolution 0.1%).
Represents the minimum change in position corresponding to a minimum change in power supplied by the instrument below which the actuator will not physically respond to the command.
This represents the minimum variation in position due to which the actuator does not physically respond to the command.
The minimum duration of the movement can be set in t.Lo, expressed as a % of actuator time.
- Impulsive intervention threshold (t.Hi) expressed as a % of the actuator time (resolution 0.1%) represents the position displacement (requested position – real position) due to which the manoeuvre request becomes impulsive.

You can choose between 2 types of control:
1) ON time of movement = t.on and OFF time proportional to shift and greater than or equal to t.Lo (we recommend setting t.on = t.Lo) (set t.oF = 0).
2) ON time of movement = t.on and OFF time = t.oF. A value set for t.oF < t.on is forced to t.on. To activate this type, set t.oF < > 0.
The type of movement approach allows fine control of the reverse drive valve (from potentiometer or not), especially useful in cases of high mechanical inertia.
Set t.Hi = 0 to exclude modulation in positioning.
This type of modulated approach allows precise control of the feedback actioned valve, by a potentiometer or not, and is especially useful in cases of high mechanical inertia. Setting t.Hi = 0 excludes modulation in positioning.

- Dead zone(dE.b) is a displacement band between the adjustment setpoint and the process variable within which the controller does not supply any command to the valve (Open = OFF; Close = OFF). It is expressed as a percentage of the bottom scale and is positioned below the setpoint.
The dead zone is useful in an operative process to avoid straining the actuator with repeated commands and an insignificant effect on the adjustment. Setting dE.b = 0 the dead zone is excluded.

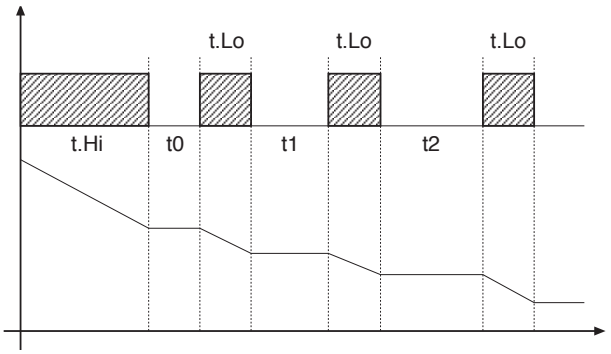


Graph of behavior inside the band with integral time ≠ 0.

With integral time = 0, movement ON time is always equal to OFF time.

t0 = t.Lo

## Valve control modes

With the controller in manual, the setting of parameter At.y ≥ 8 allows direct control of the valve open and close commands through the keyboard Increments and Decrements on the front seats.

**V0** - for floating valve without potentiometer

Model V0 have similar behaviour: every manoeuvre request greater than the minimum impulse t.Lo is sent to the actuator by means of the OPEN/CLOSE relays; every action updates the presumed position of the virtual potentiometer calculated on the basis of the actuator travel declared time.
In this way there is always a presumed position of the valve which is compared with the position request of the controller.
Having reached a presumed extreme position (entirely open or entirely closed determined by the “virtual potentiometer”) the controller provides a command in the same direction, in this way ensuring the real extreme position is reached (minimum command time = t.on).
The actuators are usually protected against the OPEN command in the entirely open position or CLOSE command in the entirely closed position.

**V3** - for floating valve, PI control

When the difference between the position calculated by the controller and the only proportional component exceeds the value corresponding to the minimum impulse t.Lo the controller provides an OPEN or CLOSE command of the duration of the minimum impulse itself t.Lo.
At each delivery the integral component of the command is set to zero (discharge of the integral).
The frequency and duration of the impulses is correlated to the integral time (h.it or c.it).

*Non-movement behavior*
t.Hi = 0: with power = 100% or 0.0%, the corresponding open or close outputs always remain enabled (safety status).

*Movement behavior*
t.Hi < > 0: with position attained corresponding to 100% or 0.0%, the corresponding open or close outputs are switched off.

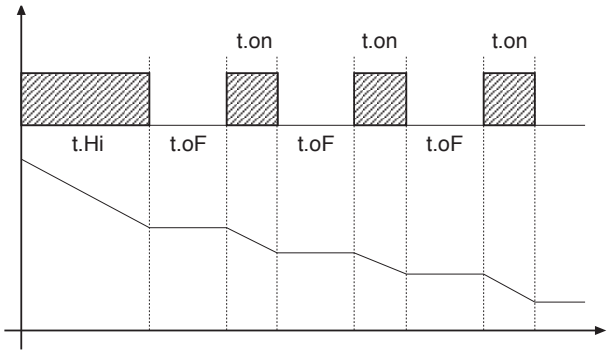


If t.oF = 0, current function is maintained.

If t.oF ≠ 0 movement mode will be as shown on the graph

# 10 • CONTROL ACTIONS

*Proportional Action*:
action in which contribution to output is proportional to deviation at input (deviation = difference between controlled variable and setpoint).
*Derivative Action*:
action in which contribution to output is proportional to rate of variation input deviation.
*Integral Action*:
action in which contribution to output is proportional to integral of time of input deviation.

**Influence of Proportional, Derivative and Integral actions on response of process under control**

* An increase in P.B. reduces oscillations but increases deviation.
* A reduction in P.B. reduces the deviation but provokes oscillations of the controlled variable (the system tends to be unstable if P.B. value is too low).
* An increase in Derivative Action corresponds to an increase in Derivative Time, reduces deviation and prevents oscillation up to a critical value of Derivative Time, beyond which deviation increases and prolonged oscillations occur.
* An increase in Integral Action corresponds to a reduction in Integral Time, and tends to eliminate deviation between the controlled variable and the setpoint when the system is running at rated speed.
If the Integral Time value is too long (Weak integral action), deviation between the controlled variable and the setpoint may persist.
Contact GEFRAN for more information on control actions.

# 11 • MANUAL TUNING

**A)** Enter the setpoint at its working value.
**B)** Set the proportional band at 0.1% (with on-off type setting).
**C)** Switch to automatic and observe the behavior of the variable. It will be similar to that in the figure:

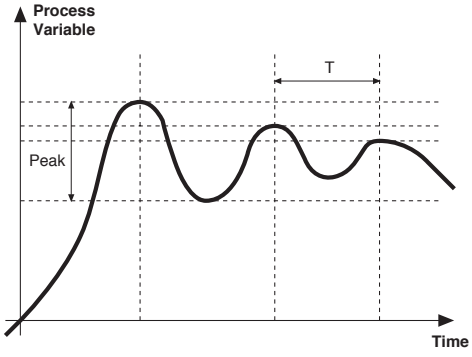


**D**) The PID parameters are calculated s follows: Proportional band

$$P.B.= \frac{Peak}{(V\ max - V\ min)} \times 100$$

(V max - V min) is the scale range.
Integral time: It = 1.5 x T
Derivative time: dt = It/4
**E)** Switch the unit to manual, set the calculated parameters. Return to PID action by setting the appropriate relay output cycle time, and switch back to Automatic.
**F)** If possible, to optimize parameters, change the setpoint and check temporary response. If an oscillation persists, increase the proportional band. If the response is too slow, reduce it.

# 12 • SET GRADIENT

SET GRADIENT: if set to ≠0, the setpoint is assumed equal to PV at power-on and auto/man switchover. With gradient set, it reaches the local setpoint. Every variation in setpoint is subject to a gradient.
The set gradient is inhibited at power-on when self-tuning is engaged.
If the set gradient is set to ≠0, it is active even with variations of the local setpoint.
The control setpoint reaches the set value at the speed defined by the gradient.

# 13 • SOFTWARE ON / OFF SWITCHING FUNCTION

**How to switch the unit OFF:** hold down the “F” and “Raise” keys simultaneously for 5 seconds to deactivate the unit, which will go to the OFF state while keeping the line supply connected and keeping the process value displayed. The SV display is OFF.
All outputs (alarms and controls) are OFF (logic level 0, relays de-energized) and all unit functions are disabled except the switch-on function and digital communication.
**How to switch the unit ON:** hold down the “F” key for 5 seconds and the unit will switch OFF to ON. If there is a power failure during the OFF state, the unit will remain in OFF state at the next power-up (ON/OFF state is memorized).
The function is normally enabled, but can be disabled by setting the parameter Prot = Prot +16.

# 14 • SELF-TUNING

The function works for single output systems (heating or cooling). The self-tuning action calculates optimum control parameter values during process startup. The variable (for example, temperature) must be that assumed at zero power (room temperature).
The controller supplies maximum power until an intermediate value between starting value and setpoint is reached, after which it zeros power.
PID parameters are calculated by measuring overshoot and the time needed to reach peak. When calculations are finished, the system disables automatically and the control proceeds until the setpoint is reached.

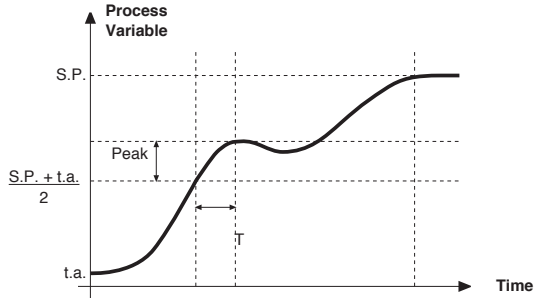


**How to activate self-tuning:**
**A. Activation at power-on**
1. Set the setpoint to the required value
2. Enable selftuning by setting the Stun parameter to 2 (CFG menu)
3. Turn off the instrument
4. Make sure the temperature is near room temperature
5. Turn on the instrument again

**B. Activation from keyboard**
1. Make sure that key M/A is enabled for Start/Stop selftuning (code but = 6 Hrd menu)
2. Bring the temperature near room temperature
3. Set the setpoint to the required value
4. Press key M/A to activate selftuning (Attention: selftuning interrupts if the key is pressed again)

The procedure runs automatically until finished, when the new PID parameters are stored: proportional band, integral and derivative times calculated for the active action (heating or cooling). In case of double action (heating or cooling), parameters for the opposite action are calculated by maintaining the initial ratio between parameters (ex.: CPb = HPb * K; where K = CPb / HPb when self-tuning starts). When finished, the Stun code is automatically cancelled.

**Notes :**
-The procedure does not start if the temperature is higher than the setpoint (heating control mode) or if the temperature is lower than the setpoint (cooling control mode). In this case , the Stu code is not cancelled.
-It is advisable to eneable one of the configurable LEDs to signal selftuning status.By setting one of parameters
LED1, LED2, LED3=4 or 20 on the Hrd menu, the respective LED will be on or flashing when selftuning is active.

# 15 • ACCESSORIES

## • Interface for instrument configuration

*KIT PC USB / RS485 o TTL*

Kit for PC via the USB port (Windows environment) for GEFRAN instruments configuration:
Lets you read or write all of the parameters
• A single software for all models
• Easy and rapid configuration
• Saving and management of parameter recipes
• On-line trend and saving of historical data
Component Kit:
- Connection cable PC USB ... port TTL
- Connection cable PC USB ... RS485 port
- Serial line converter
- CD SW GF Express installation

## • ORDERING CODE

| | |
|---|---|
| **GF_eXK-2-0-0** | cod F049095 |

# 16 • ORDER CODE

600V [R] [R] [R] [-]

| UTPUT 1 | |
|---|---|
| Relay | R |

| UTPUT 2 | |
|---|---|
| Relay | R |

| UTPUT 3 | |
|---|---|
| Relay | R |

| POWER SUPPLY | |
|---|---|
| 0 | 11...27Vac/dc |
| 1 | 100...240Vac |

## • WARNINGS

WARNING: this symbol indicates danger. It is placed near the power supply circuit and near high-voltage relay contacts.

**Read the following warnings before installing, connecting or using the device:**

• follow instructions precisely when connecting the device.
• always use cables that are suitable for the voltage and current levels indicated in the technical specifications.
• the device has no ON/OFF switch: it switches on immediately when power is turned on. For safety reasons, devices permanently connected to the power supply require a two-phase disconnecting switch with proper marking. Such switch must be located near the device and must be easily reachable by the user. A single switch can control several units.
• if the device is connected to electrically NON-ISOLATED equipment (e.g. thermocouples), a grounding wire must be applied to assure that this connection is not made directly through the machine structure.
• if the device is used in applications where there is risk of injury to persons and/or damage to machines or materials, it MUST be used with auxiliary alarm units. You should be able to check the correct operation of such units during normal operation of the device.
• before using the device, the user must check that all device parameters are correctly set in order to avoid injury to persons and/or damage to property.
• the device must NOT be used in infiammable or explosive environments. It may be connected to units operating in such environments only by means of suitable interfaces in conformity to local safety regulations.
• the device contains components that are sensitive to static electrical discharges. Therefore, take appropriate precautions when handling electronic circuit boards in order to prevent permanent damage to these components.

***Installation*:** installation category II, pollution level 2, double isolation
The equipment is intended for permanent indoor installations within their own enclosure or panel mounted enclosing the rear housing and exposed terminals on the back.
• only for low power supply: supply from Class 2 or low voltage limited energy source
• power supply lines must be separated from device input and output lines; always check that the supply voltage matches the voltage indicated on the device label.
• install the instrumentation separately from the relays and power switching devices
• do not install high-power remote switches, contactors, relays, thyristor power units (particularly if “phase angle” type), motors, etc... in the same cabinet.
• avoid dust, humidity, corrosive gases and heat sources.
• do not close the ventilation holes; working temperature must be in the range of 0...50°C.
• surrounding air: 50°C
• use 60/75°C copper (Cu) conductor only, wire size range 2x No 22 - 14AWG, Solid/Stranded
• use terminal tightening torque 0.5N m
If the device has faston terminals, they must be protected and isolated; if the device has screw terminals, wires should be attached at least in pairs.
• *Power*: supplied from a disconnecting switch with fuse for the device section; path of wires from switch to devices should be as straight as possible; the same supply should not be used to power relays, contactors, solenoid valves, etc.; if the voltage waveform is strongly distorted by thyristor switching units or by electric motors, it is recommended that an isolation transformer be used only for the devices, connecting the screen to ground; it is important for the electrical system to have a good ground connection; voltage between neutral and ground must not exceed 1V and resistance must be less than 6Ohm; if the supply voltage is highly variable, use a voltage stabilizer for the device; use line filters in the vicinity of high frequency generators or arc welders; power supply lines must be separated from device input and output lines; always check that the supply voltage matches the voltage indicated on the device label.
• *Input and output connections*: external connected circuits must have double insulation; to connect analog inputs (TC, RTD) you have to: physically separate input wiring from power supply wiring, from output wiring, and from power connections; use twisted and screened cables, with screen connected to ground at only one point; to connect adjustment and alarm outputs (contactors, solenoid valves, motors, fans, etc.), install RC groups (resistor and capacitor in series) in parallel with inductive loads that work in AC *(Note: all capacitors must conform to VDE standards (class x2) and support at least 220 VAC. Resistors must be at least 2W)*; fit a 1N4007 diode in parallel with the coil of inductive loads that operate in DC.

**GEFRAN spa will not be held liable for any injury to persons and/or damage to property deriving from tampering, from any incorrect or erroneous use, or from any use not conforming to the device specifications.**

# Set-up for 600V RRR0-1-T73 regulator

**Set up for temperature probe Pt100 (ex Siemens QAE2120 130°C max.)**

The regulator comes out of the factory preset with the corresponding values of the Siemens RWF40.000 and RWF50.2x

Verify wiring of the sensor

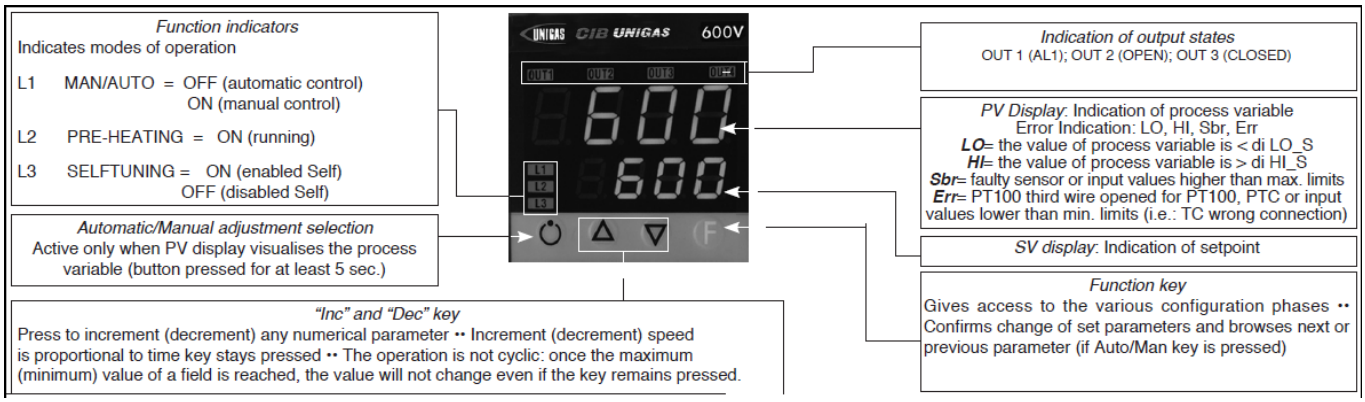


Regulation of the set-point **= 80**
It can be modified by using arrows "up" and "down".
By pushing **F** you go to parameters:

| | |
|---|---|
| Hy.P | 5 (hysteresis positive for output 1, terminals 21-22 (ex Q13-Q14) |
| Hy.n | -5 hysteresis negative for output ,1 terminals 21-22 (ex Q13-Q14) |

Keep pushing **F** until you see **PASS**, release **F** and through the arrows set **99**, push **F** and visualize **Pro** (protection code) default is **12**, through the arrows set **128** and push **F,** keep it pushed until all parameters **InF**, **CFG**, **InP**, **Out**, **PASS** are visualized.

| **CFG** | |
|---|---|
| S.tun | 0 |
| hPb | 1,2 |
| hIt | 5,83 |
| hdt | 1,33 |
| … | |

| **InP** | |
|---|---|
| …. | |
| tyP | 30 (Pt100) |
| … | |
| dP_S | 1 (decimals num.) |
| Lo.S | 0 (min. sensor scale) |
| Hi.S | 850,0 (max sensor scale) |
| oFS | 0 (offset of input correction) |
| Lo.L | 30,0 (lower set-point range limit) |
| Hi.L | 130,0 (upper set-point range limit) |

| **Out** | |
|---|---|
| A1.r | 0 |
| … | |
| A1.t | 3 (operating mode AL1 =inverse-relative-normal) |
| … | |
| rL.1 | 2 (AL1) |
| rL.2 | 18 (open) |
| rL.3 | 19 (close) |
| rEL | 0 |
| A.ty | 9 (type of servocontrol command) |
| Ac.t | 12 (servocontrol running time: SQN72.4…/STA12..=12; SQM40.265=30) |
| t_Lo | 2 |
| t_Hi | 0.0 |
| t.on | 2 |
| t.oF | 0.0 |
| dE.b | 0,1 (dead zone in % of end scale) |
| | |

| **PAS** | 99 then push and keep pushed **F** until visualization of **Hrd** |
|---|---|
| | |
| **Hrd** | |
| … | |
| CtrL | 6 (PID warm) |
| AL.nr | 1 |
| but | 1 |
| diSP | 0 |
| Ld.1 | 1 |
| Ld.2 | 28 |
| Ld.3 | 20 |

Keep pushed **F** until you visualize **PASS**, release **F** and through the arrows set **99**, push **F** and visualize **Pro** (protection code) from **128**, through the arrows, bring it back to **12,** and keep **F** pushed until you come back to set-point value.

**Manual operation** :
Keep pushed the lower left key for at least 5 sec.
The instrument will enter the "MAN" mode (see also "Ld1" switching on).
Through the arrows, "Open" and "Close" outputs are activated.
To come back to normal working keep the lower left key pushed for at least 5 sec.

**Software switch off** :
By keeping pushed keys **Arrow up** + **F** for more than 5 sec. the instrument switches off the software, does not command the outputs and visualize only the variable of process measured by the probe.
To restore keep pushed **F** for more than 5 sec.

**Set up for temperature probe Pt100 for high temperature (350°C max.)**

Verify wiring of the sensor

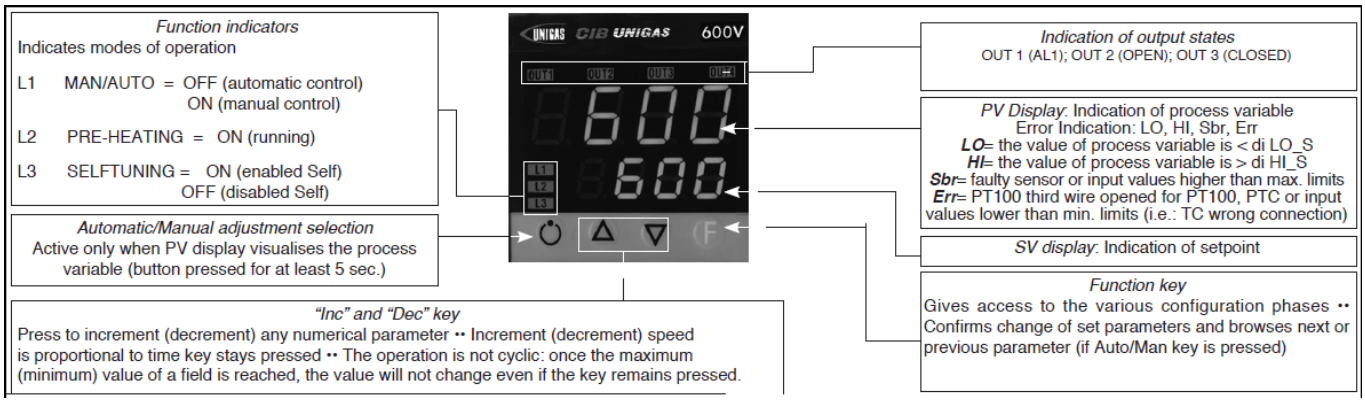


Regulation of the set-point = **80**
It can be modified by using arrows "up" and "down".
By pushing **F** you go to parameters:

| | |
|---|---|
| Hy.P | 10 (hysteresis positive for output 1 terminals 21-22 (ex Q13-Q14) |
| Hy.n | -5 (hysteresis negative for output 1 terminals 21-22 (ex Q13-Q14) |

Keep pushing **F** until you see **PASS**, release **F** and through the arrows set **99**, push **F** and visualize **Pro** (protection code) default is **12**, through the arrows set **128** and push **F,** keep it pushed until all parameters **InF**, **CFG**, **InP**, **Out**, **PASS** are visualized.

| **CFG** | |
|---|---|
| S.tun | 0 |
| hPb | 1,2 |
| hIt | 5,83 |
| hdt | 1,33 |
| … | |

| **InP** | |
|---|---|
| …. | |
| tyP | 30 (Pt100) |
| … | |
| dP_S | 1 (decimals num.) |
| Lo.S | 0 (min. sensor scale) |
| Hi.S | 850,0 (max sensor scale) |
| oFS | 0 (offset of input correction) |
| Lo.L | 0,0 (lower set-point range limit) |
| Hi.L | 350,0 (upper set-point range limit) |

| **Out** | |
|---|---|
| A1.r | 0 |
| … | |
| A1.t | 3 (mode AL1 =inverse-relative-normal) |
| … | |
| rL.1 | 2 (AL1) |
| rL.2 | 18 (open) |
| rL.3 | 19 (close) |
| rEL | 0 |
| A.ty | 9 (type of servocontrol command) |
| Ac.t | 12 (servocontrol running time: SQN72.4…/STA12..=12; SQM40.265=30) |
| t_Lo | 2 |
| t_Hi | 0.0 |
| t.on | 2 |
| t.oF | 0.0 |
| dE.b | 0,1 (dead zone in % of end scale) |

| **PAS** | 99 then push and keep pushed **F** until visualization of **Hrd** |
|---|---|
| | |
| **Hrd** | |
| … | |
| CtrL | 6 (PID warm) |
| AL.nr | 1 |
| but | 1 |
| diSP | 0 |
| Ld.1 | 1 |
| Ld.2 | 28 |
| Ld.3 | 20 |

Keep pushed **F** until you visualize **PASS**, release **F** and through the arrows set **99**, push **F** and visualize **Pro** (protection code) from **128**, through the arrows, bring it back to **12,** and keep **F** pushed until you come back to set-point value.

**Manual operation**:
Keep pushed the lower left key for at least 5 sec.
The instrument will enter the "MAN" mode (see also "Ld1" switching on).
Through the arrows, "Open" and "Close" outputs are activated.
To come back to normal working keep the lower left key pushed for at least 5 sec.

**Software switch off** :
By keeping pushed keys **Arrow up** + **F** for more than 5 sec. the instrument switches off the software, does not command the outputs and visualize only the variable of process measured by the probe.
To restore keep pushed **F** for more than 5 sec.

## Set up for pressure transmitter 2 wires signal 4÷20mA

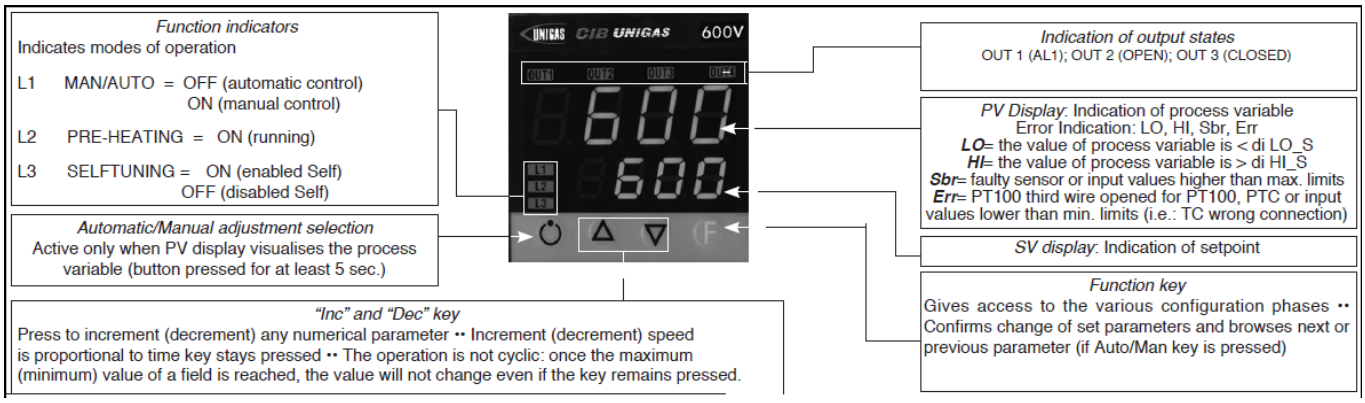


With pressure transmitters first we need to enable their power supply: remove the part as shown below, then, on the CPU unit, move the bridge from Pt100 to +Vt

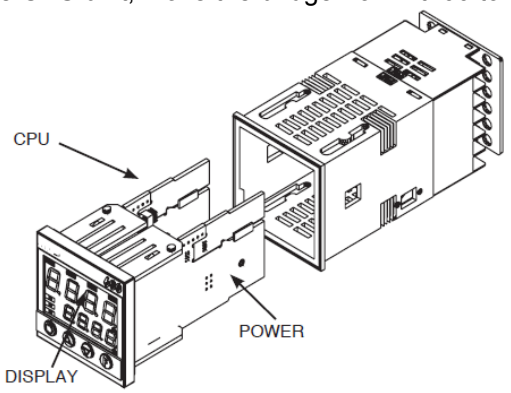


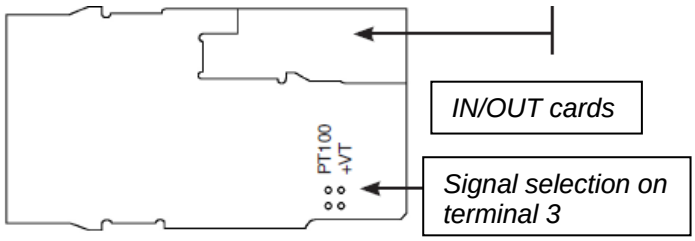


Verify wiring of the sensor

Impostazione set-point

| Transmitter | **1,6bar** | **3bar** | **10bar** | **16bar** | **25bar** | **40bar** |
|---|---|---|---|---|---|---|
| Set-point | 1bar | 1,5bar | 6bar | 6bar | 6bar | 6bar |

To modify it directly use "up" and "down" arrows.
By pushing **F** you go to parameter:

| Transmitter | **1,6bar** | **3bar** | **10bar** | **16bar** | **25bar** | **40bar** |
|---|---|---|---|---|---|---|
| Hy.P | 0,2bar | 0,5bar | 0,5bar | 0,8bar | 1,25bar | 2bar |
| Hy.n | 0bar | 0bar | 0bar | 0bar | 0bar | 0bar |

Keep pushing **F** until you see **PASS**, release **F** and through the arrows set **99**, push **F** and visualize **Pro** (protection code) default is **12**, through the arrows set **128** and push **F,** keep it pushed until all parameters **InF**, **CFG**, **InP**, **Out**, **PASS** are visualized.

| **CFG** | |
|---|---|
| S.tun | 0 |
| hPb | 5 |
| hIt | 1,33 |
| hdt | 0,33 |
| … | |

| **InP** | |
|---|---|
| …. | |
| tyP | 44 (4÷20mA) |
| … | |
| dP_S | 2 (decimals num.) |

| Transmitter | **1,6bar** | **3bar** | **10bar** | **16bar** | **25bar** | **40bar** | |
|---|---|---|---|---|---|---|---|
| Lo.S | 0,00 | 0,00 | 0,00 | 0,00 | 0,00 | 0,00 | min. sensor scale |
| Hi.S | 1,60 | 3,00 | 10,00 | 16,00 | 25,00 | 40,00 | max sensor scale |
| oFS | 0 | 0 | 0 | 0 | 0 | 0 | offset of input correction |
| Lo.L | 0,00 | 0,00 | 0,00 | 0,00 | 0,00 | 0,00 | lower set-point setting |
| Hi.L | 1,60 | 3,00 | 10,00 | 16,00 | 25,00 | 40,00 | upper set-point setting |

| **Out** | |
|---|---|
| A1.r | 0 |
| … | |
| A1.t | 3 (mode AL1 =inverse-relative-normal) |
| … | |
| rL.1 | 2 (AL1) |
| rL.2 | 18 (open) |
| rL.3 | 19 (close) |
| rEL | 0 |
| A.ty | 9 (type of servocontrol command) |
| Ac.t | 12 (servocontrol running time: SQN72.4…/STA12..=12; SQM40.265=30) |
| t_Lo | 2 |
| t_Hi | 0.0 |
| t.on | 2 |
| t.oF | 0.0 |
| dE.b | 0,1 (dead zone in % of end scale) |

| **PAS** | 99 then push and keep pushed **F** until visualization of **Hrd** |
|---|---|
| | |
| **Hrd** | |
| … | |
| CtrL | 6 (PID warm) |
| AL.nr | 1 |
| but | 1 |
| diSP | 0 |
| Ld.1 | 1 |
| Ld.2 | 28 |
| Ld.3 | 20 |

Keep pushed **F** until you visualize **PASS**, release **F** and through the arrows set **99**, push **F** and visualize **Pro** (protection code) from **128**, through the arrows, bring it back to **12,** and keep **F** pushed until you come back to set-point value.

**Manual operation**:
Keep pushed the lower left key for at least 5 sec.
The instrument will enter the "MAN" mode (see also "Ld1" switching on).
Through the arrows, "Open" and "Close" outputs are activated.
To come back to normal working keep the lower left key pushed for at least 5 sec.

**Software switch off** :
By keeping pushed keys **Arrow up** + **F** for more than 5 sec. the instrument switches off the software, does not command the outputs and visualize only the variable of process measured by the probe.
To restore keep pushed **F** for more than 5 sec.

## Set -up for thermocouples type **K** or **J**

Verify wiring of the sensor

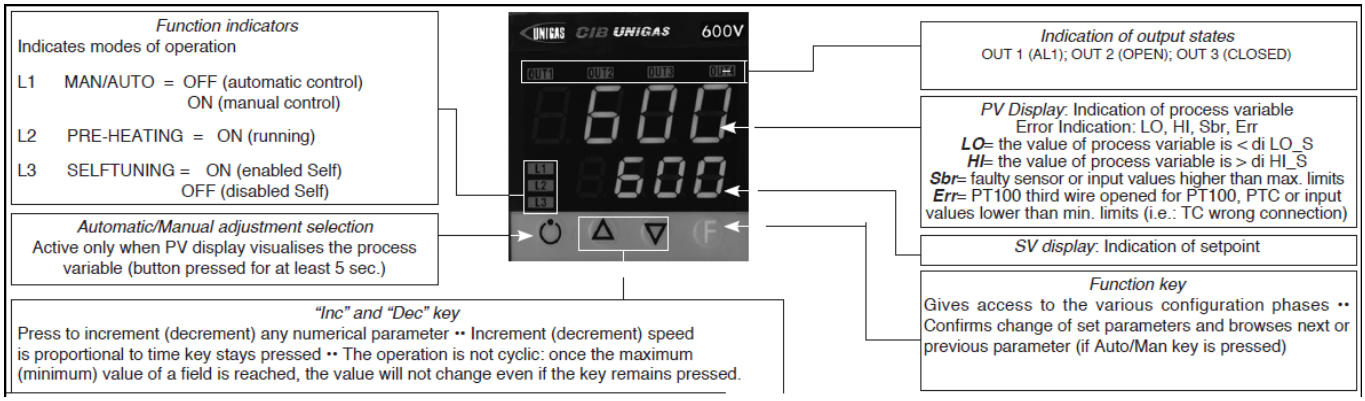


Regulation of the set-point = **80**
It can be modified by using arrows "up" and "down".
By pushing **F** you go to parameters:

| | |
|---|---|
| Hy.P | 10 (hysteresis positive for output 1 terminals 21-22 (ex Q13-Q14) |
| Hy.n | -5 (hysteresis negative for output 1 terminals 21-22 (ex Q13-Q14) |

Keep pushing **F** until you see **PASS**, release **F** and through the arrows set **99**, push **F** and visualize **Pro** (protection code) default is **12**, through the arrows set **128** and push **F,** keep it pushed until all parameters **InF**, **CFG**, **InP**, **Out**, **PASS** are visualized.

| **CFG** | |
|---|---|
| S.tun | 0 |
| hPb | 1,2 |
| hIt | 5,83 |
| hdt | 1,33 |
| … | |

| **InP** | |
|---|---|
| …. | |
| tyP | 2 (thermocouple **K** 0÷1300°C) / 0 (thermocouple **J** 0÷1000°C) |
| … | |
| dP_S | 0 (no decimal) / 1 (1 decimal) |
| Lo.S | 0 (min. sensor scale) |
| Hi.S | 1300 (max sensor scale for tc **K**) / 1000 (max sensor scale for tc **J**) |
| oFS | 0 (offset of input correction) |
| Lo.L | 0 (lower set-point range limit) |
| Hi.L | 1300 (upper set-point range limit) per tc **K** / 1000 for tc **J** |

| **Out** | |
|---|---|
| A1.r | 0 |
| … | |
| A1.t | 3 (mode AL1 =inverse-relative-normal) |
| … | |
| rL.1 | 2 (AL1) |
| rL.2 | 18 (open) |
| rL.3 | 19 (close) |
| rEL | 0 |
| A.ty | 9 (type of servocontrol command) |
| Ac.t | 12 (servocontrol running time: SQN72.4…/STA12..=12; SQM40.265=30) |
| t_Lo | 2 |
| t_Hi | 0.0 |
| t.on | 2 |
| t.oF | 0.0 |
| dE.b | 0,1 (dead zone in % of end scale) |

| **PAS** | 99 then push and keep pushed **F** until visualization of **Hrd** |
|---|---|
| | |
| **Hrd** | |
| … | |
| CtrL | 6 (PID warm) |
| AL.nr | 1 |
| but | 1 |
| diSP | 0 |
| Ld.1 | 1 |
| Ld.2 | 28 |
| Ld.3 | 20 |

Keep pushed **F** until you visualize **PASS**, release **F** and through the arrows set **99**, push **F** and visualize **Pro** (protection code) from **128**, through the arrows, bring it back to **12,** and keep **F** pushed until you come back to set-point value.

**Manual operation**:
Keep pushed the lower left key for at least 5 sec.
The instrument will enter the "MAN" mode (see also "Ld1" switching on).
Through the arrows, "Open" and "Close" outputs are activated.
To come back to normal working keep the lower left key pushed for at least 5 sec.

**Software switch off** :
By keeping pushed keys **Arrow up** + **F** for more than 5 sec. the instrument switches off the software, does not command the outputs and visualize only the variable of process measured by the probe.
To restore keep pushed **F** for more than 5 sec.

# MANUAL FOR OPERATION AND CALIBRATION

# MODULATOR

# SIEMENS RWF 40….

M12905CH Rev. 07 11/09

**INSTRUMENT MOUNTING**

Mount the instrument using the relevant mounts as illustrated in the figure.

To wire the instrument and sensors, follow the instructions given on the burner's wiring diagrams.

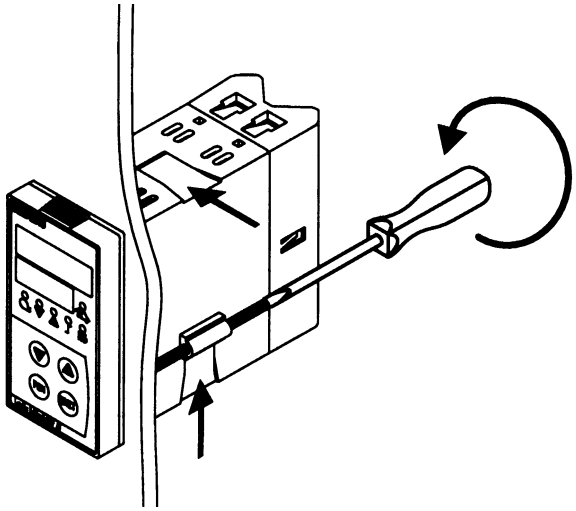

**INSTRUMENT FRONTAL PANEL**

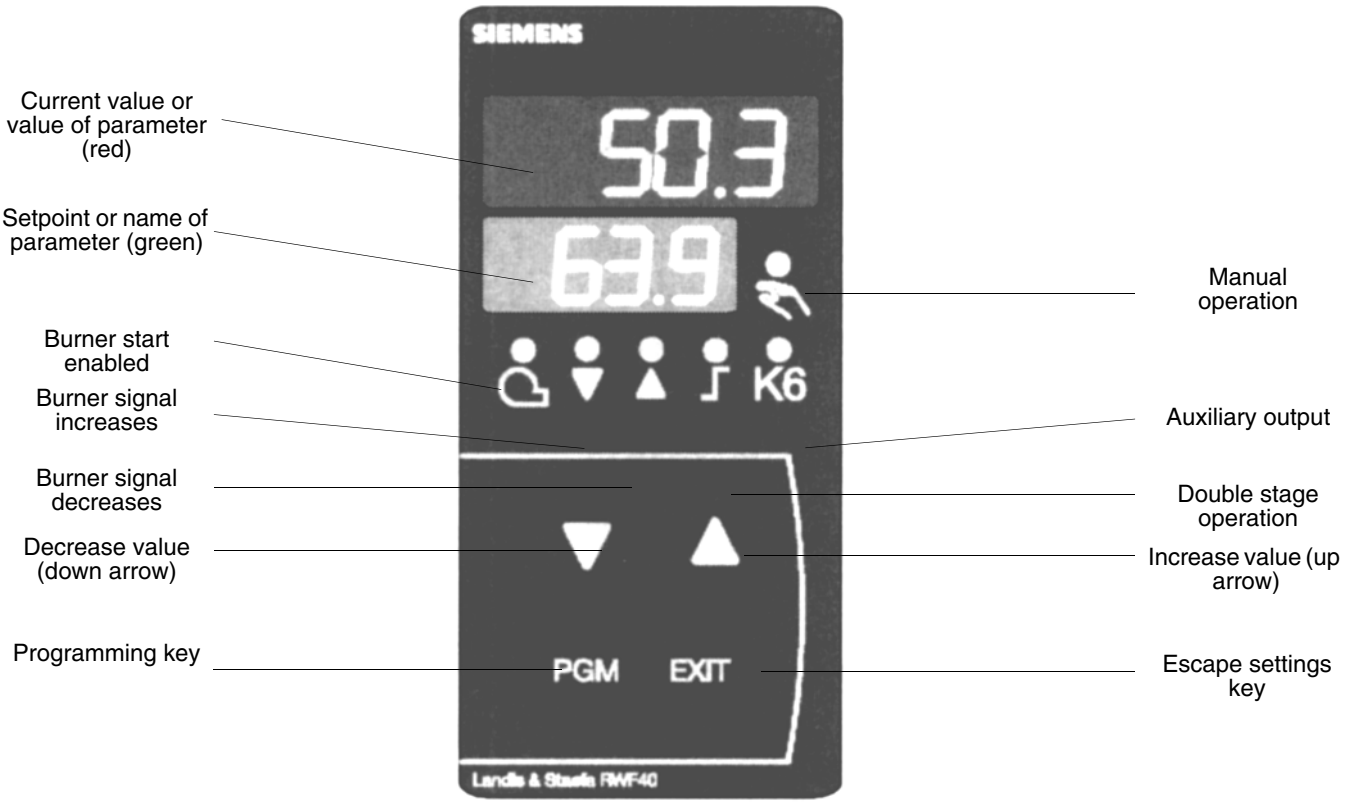

**INSTRUMENT SETTINGS**

The instrument comes with a number of factory settings that are good for 90% of cases. However, you can set or edit parameters proceeding as follows

**1. Setting or editing of setpoint value**

With the burner switched off (thermostat/pressure switch series contacts open, i.e. terminals 3-4 open), press the PGM key, holding it down for less than 2 sec.. The display at the bottom (green) reads SP1: use the up and down arrows to set the setpoint value on the display at the top (red).

To confirm the value, press the **PGM** key, then press **EXIT** to return to normal operation.

**2. Checking or editing the instrument's PID parameters (table 1 attached)**

- Press the PGM key, holding it down for longer than 2 sec.. The code AL appears on the green display whilst the red display reads 0
- reads **0**.
- To change, use the up and down arrows to change the value on the red display.
- To confirm, press PGM and the green display moves on to the next parameter.
- Repeat the previous operations for all parameters.
- To stop, press the EXIT key.
- For a list of PID parameters, see table (1) attached.

**3. Setting the kind of sensor to be connected to the instrument (table 2 attached)**

- With the instrument in normal operating mode, press the **PGM** key, holding it down for 2 sec.. The instrument enters PID parameter configuration mode, hence press the **PGM** key for another 2 sec.
- The green display features the code **C111** whilst the red display gives the code **9030**.
- Each digit of the code corresponds to a settable parameter
- When the down arrow is pressed, the first digit on the left (n°9) on the red display starts flashing. Pressing the up arrow while the digit is flashing, you can change the value according to table (2) attached .
- Once you have edited the value, press the down arrow again and the second digit from the left (n°0) starts flashing and so on for all four digits. Press **PGM** to confirm and **EXIT** to exit.

Example: temperature sensor, set **9030**; pressure sensor, set **G030**.

**4. C112 and C113 configurations (tables 3 & 4 attached) :**

Configurations **C112** and **C113** enable use of an auxiliary contact (terminals Q63-Q64 and LED K6 on the front panel), which is fully configurable.

It also allows you to choose between degrees Celsius °C or Fahrenheit °F and to lock the instrument's keys.

With the instrument in normal operating mode, press the **PGM** key, holding it down for 2 sec.. The instrument enters PID parameter configuration mode, hence press the **PGM** key for another 2 sec..

The code **C111** appears on the green display whilst the red display reads **9030**. If you press **PGM** again, the green display reads **C112** and the red display reads **0110**.

For the instrument to work as standard, the **C112** configuration should never be altered, whilst the **C113** configuration should be changed when using pressure sensors or 0-10V / 0.4-20mA signals (see table (5) attached).

**5. Configuring process values:**

With the instrument in normal operating mode, press the **PGM** key for 2 sec.. The instrument enters PID parameter configuration mode. The code **C111** appears on the green display, whilst the code 9030 (or different code depending on settings made previously) appears on the red display. If you press **PGM** again, the code becomes **C112** and the red display reads 0010. When you next press **PGM**, the code becomes **C113** and the red display reads 0110. When you next press **PGM**, the green display reads **SCL** (=lower limit [instrument range start] for analogue input 1, valid for signals 0-10V, 0-20mA, 4-20mA, 0-100ohms etc.). Use the up arrow or down arrow to set the chosen value (see table (5) attached).

If you press the **PGM** key again, the green display reads **SCH** (=upper limit [instrument range end] for analogue input 1, valid for input signals 0-10V, 0-20mA, 4-20mA, 0-100ohms etc.). Use the up and down arrow to set the chosen value (see table (5) attached).

Example: for SIEMENS pressure sensor QBE2.. P25 (25bar), the input signal used is 0-10V: set **SCL** to 0 and **SCH** to 2500. That way the instrument's scale ranges from 0 to 2500 kPa (25 bar).

Pressing the **PGM** key repeatedly calls up the following parameters in sequence. These parameters can be edited with the up and down arrows:

**SCL2**:lower limit for analogue input 2 (same as SCL but for input 2 - factory setting 0);

**SCH2**:upper limit for analogue input 2 (same as SCH but for input 2 - factory setting 100);

**SPL**: lower setpoint limit (same as SCL but for setpoint - factory setting 0);

**SPH**: upper setpoint limit (same as SCH but for setpoint - factory setting 100);

Example: for SIEMENS pressure sensor QBE2.. P25 (25bar), the input signal used is 0-10V: if you want to work between 5 and 19 bar, set **SPL** to 500 and **SPH** to 1900 (kPa). That way the setpoint scale can be set between 500 and 1900 kPa (5 and 19 bar).

**OFF1**:correction for analogue input 1 (factory setting 0)

**OFF2**:correction for analogue input 2 (factory setting 0)

**OFF3**:correction for analogue input 3 (factory setting 0)

**HYST**:"K6" auxiliary contact differential (factory setting 1)

**dF1**: delay applied to sensor signal to prevent transients (range 0-100sec.; factory setting 1 sec.)

**6. Manual control**

- To control burner output manually, press the **EXIT** key for 5 sec. with the burner operating - the LED with the hand symbol lights.
- At this point, use the up arrow and down arrow to increase or decrease burner output.
- To exit manual mode, press the **EXIT** key.
- NB: Every time the controller switches the burner off (start enabled LED off - Q13-Q14 contact open), manual mode is disabled when the burner is switched back on.

**7. Instrument self-setting (auto-tuning)**

- If the burner in the steady state does not respond properly to heat generator requests, you can activate the instrument's self-setting function, which recalculates PID values for its operation, deciding which are most suitable for the specific kind of request
- To activate this function, proceed as follows:
- Press the **PGM** key and down arrow at the same time.
- The green display reads tunE and the instrument forces the burner to increase and decrease output.
- During these output oscillations, the instrument calculates the PID parameters (proportional band, integral time, derivative time).
- At the end of calculations, the tunE function switches off automatically and the instrument has stored the new parameters.
- If you want to disable the self-setting function, press the up arrow once it has started.
- PID parameters calculated by the instrument can be edited at any time following the procedure illustrated earlier in point 2.

**Note:**

**If no key is pressed for ~10sec. during the instrument's setting, the instrument automatically exits setting mode and returns to normal operating mode.**

**TABLE 1 - "PID" PARAMETERS AND RELEVANT FACTORY SETTINGS**

| Parameter | Display | Values range | Factory setting | Remarks |
|---|---|---|---|---|
| Limit value for auxiliary contact (*) | AL | from -1999 to 9999 digit | 0 | Do not alter |
| Auxiliary contact switching differential (*) | HYST | from 0 to 999.9 digit | 1 | Do not alter |
| Proportional band (*) | PB.1 | from 0.1 to 9999 digit | 10 | Typical value for temperature |
| Derivative action | dt | from 0 to 9999 sec. | 80 | Typical value for temperature |
| Integral action | rt | from 0 to 9999 sec. | 350 | Typical value for temperature |
| Dead band (*) | db | from 0 to 999.9 digit | 1 | Typical value |
| Servocontrol running time | tt | from 10 to 3000 sec. | 15 | Set servocontrol running time |
| Switch-on differential (*) | HYS1 | from 0.0 to -199.9 digit | -5 | Value under setpoint below which the burner switches back on (Q13-Q14 closes) |
| Lower switch-off differential (*) | HYS2 | from 0.0 to HYS3 | 3 | Do not alter |
| Upper switch-off differential (*) | HYS3 | from 0.0 to 999.9 digit | 5 | Value over setpoint above which the burner switches off (Q13-Q14 opens) |
| Modulating response threshold | q | from 0.0 to 999.9 | 0 | Do not alter |
| Weather compensation gradient | H | from 0.0 to 4 | 1 | Do not alter |
| Ambient temperature parallel displacement (*) | P | from -90 to +90 | 0 | Do not alter |

(*) Parameters affected by setting of decimal place (C113 configuration 01X0)

**TABLE 2 - INPUTS CONFIGURATION C111**

| **Red display** | | | | |
|---|---|---|---|---|
| **Analog input 1** | **1^ digit** | **2^ digit** | **3^ digit** | **4^ digit** |
| Pt100 3 wires | 0 | | | |
| Pt100 22 wires | 1 | | | |
| Ni100 3 wires | 2 | | | |
| Ni100 22 wires | 3 | | | |
| Pt1000 3 wires | 4 | | | |
| Pt 1000 22 wires | 5 | | | |
| Ni1000 3 wires DIN 43760 | 6 | | | |
| Ni1000 22 wires DIN 43760 | 7 | | | |
| Ni1000 3 wires Siemens | 8 | | | |
| Ni1000 22 wires Siemens | 9 | | | |
| Thermocoupling K NiCr-Ni | A | | | |
| Thermocoupling T Cu-Con | b | | | |
| Thermocoupling N NiCrSil-NiSil | C | | | |
| Thermocoupling J Fe-Con | d | | | |
| Signal 0 ÷ 20 mA | E | | | |
| Signal 4 ÷ 20 mA | F | | | |
| Signal 0 ÷ 10 V | G | | | |
| Signal 0 ÷ 1 V | H | | | |
| **Analog input 2** | | | | |
| none | | 0 | | |
| external set point WFG | | 1 | | |
| external set point 0 ÷ 20 mA | | 2 | | |
| external set point 4 ÷ 20 mA | | 3 | | |
| external set point 0 ÷ 10 V | | 4 | | |
| external set point 0 ÷ 1 V | | 5 | | |
| analog shift set-point WFG | | 6 | | |
| analog shift set-point 0 ÷ 20 mA | | 7 | | |
| analog shift set-point 4 ÷ 20 mA | | 8 | | |
| analog shift set-point 0 ÷ 10 V | | 9 | | |
| analog shift set-point 0 ÷ 1 V | | A | | |
| **Analog input 3** | | | | |
| none | | | 0 | |
| external themperature sensor Pt 1000 22 wires | | | 1 | |
| xternal themperature sensor Ni1000 22 wires DIN | | | 2 | |
| xternal themperature sensor Ni1000 22 wires Siemens | | | 3 | |
| **Input D2 - Logic functions** | | | | |
| none | | | | 0 |
| changeover set-point | | | | 1 |
| V shift set-point | | | | 2 |
| **Typical settings** | | | | |
| **Siemens sensors QAE2../QAC2../QAM2..** | **9** | **0** | **3** | **0** |
| **Factory sensors Pt1000 30÷130 °C** | **5** | **0** | **3** | **0** |
| **Factory sensors Pt1000 0 ÷ 350 °C** | **5** | **0** | **3** | **0** |
| **Pressure probes QBE... 3 wires (signal 0 ÷ 10 V)** | **G** | **0** | **3** | **0** |
| **Pressure probes MBS... 2 wires (signal 4 ÷ 20 mA)** | **F** | **0** | **3** | **0** |
| **Probes Pt100 3 wires** | **0** | **0** | **3** | **0** |
| **Thermocouplings K type** | **A** | **0** | **3** | **0** |
| **Signal 4 ÷ 20 mA** | **F** | **0** | **3** | **0** |

**TABLE 3 - CONFIGURATION C112**

| Red display | 1^ digit | 2^ digit | 3^ digit | 4^ digit |
|---|---|---|---|---|
| **Auxiliary limit switch K6** | | | | |
| **none** | **0** | | | |
| lk1 function for input 1 | 1 | | | |
| lk2 function for input 1 | 2 | | | |
| lk3 function for input 1 | 3 | | | |
| lk4 function for input 1 | 4 | | | |
| lk5 function for input 1 | 5 | | | |
| lk6 function for input1 | 6 | | | |
| lk7 function for input 1 | 7 | | | |
| lk8 function for input 2 | 8 | | | |
| lk7 function for input 2 | 9 | | | |
| lk8 function for input 2 | A | | | |
| lk7 function for input 3 | b | | | |
| lk8 function for input 3 | C | | | |
| **Type of instrumentoutput control** | | | | |
| 3 points (relay type) | | **0** | | |
| DC 0 ÷ 20 mA (*) | | 1 | | |
| DC 4 ÷ 20 mA (*) | | 2 | | |
| DC 0 ÷ 10 V (*) | | 3 | | |
| **Set-point SP1** | | | | |
| SP1set with keys | | | 0 | |
| **SP1 dependent on outside sensor (analogue input 3 must be configured)** | | | **1** | |
| **Parameter lock** | | | | |
| no keyboard lock | | | | **0** |
| configuration level block | | | | 1 |
| parameters level block PID | | | | 2 |
| total block | | | | 3 |
| **Factory settings** | **0** | **0** | **1** | **0** |

**Note: (*) for RWF 40.002 only**

**TABLE 4 - CONFIGURATION C113**

| **Red display** | **1^ digit** | **2^ digit** | **3^ digit** | **4^ digit** |
|---|---|---|---|---|
| **Instrument addresses (for RWF 40.003 only** | | | | |
| **address 0** | **0** | | | |
| **address 1** | 0 | **1** | | |
| address... | ... | ... | | |
| address 99 | 9 | 9 | | |
| **Unit of measurement and decimal place** | | | | |
| °C without decimal | | | 0 | |
| **°C and 1 decimal** | | | **1** | |
| °F without decimal | | | 2 | |
| °F and 1 decimal | | | 3 | |
| **Activation of "K6"** | | | | |
| **limit contact OFF** | | | | **0** |
| limit contact ON | | | | 1 |
| **Factory settings** | **0** | **1** | **1** | **0** |

**TABLE 5 - SUMMARY OF STANDARD PARAMETER SETTINGS**

| | PARAMETERS TO BE EDITED | | | | | | | | | | | |
|---|---|---|---|---|---|---|---|---|---|---|---|---|
| **SENSORS/PROBES** | **C111** | **C113** | **SCL** | **SCH** | **SPL** | **SPH** | **HYS1 (*)** | **HYS3 (*)** | **Pb. 1** | **dt** | **rt** | **SP1 (*)** |
| **Siemens QAE2120.010** | 9030 | 0110 | - | - | 30 | 95 | -5 | 5 | 10 | 80 | 350 | 80°C |
| **Siemens QAM2120.040** | 9030 | 0110 | - | - | 0 | 80 | -2,5 | 2,5 | 10 | 80 | 350 | 40°C |
| **Pt1000 (130°C max.)** | 5030 | 0110 | - | - | 30 | 95 | -5 | 5 | 10 | 80 | 350 | 80°C |
| **Pt1000 (350°C max.)** | 5030 | 0110 | - | - | 0 | 350 | -5 | 10 | 10 | 80 | 350 | 80°C |
| **Pt100 (130°C max.)** | 0030 | 0110 | - | - | 0 | 95 | -5 | 5 | 10 | 80 | 350 | 80°C |
| **Pt100 (350°C max)** | 0030 | 0110 | - | - | 0 | 350 | -5 | 10 | 10 | 80 | 350 | 80°C |
| **Termocouple K** | A030 | 0110 | - | - | 0 | 1200 | -5 | 20 | 10 | 80 | 350 | 80°C |
| **Danfoss/Siemens 4÷20mA p 1,6 bar** | F030 | 0100 | 0 | 160 | 0 | 160 | 0 | 20 | 5 | 20 | 80 | 100kPa |
| **Danfoss/Siemens 4÷20mA p 10 bar** | F030 | 0100 | 0 | 1000 | 0 | 1000 | 0 | 50 | 5 | 20 | 80 | 600kPa |
| **Danfoss/Siemens 4÷20mA p 16 bar** | F030 | 0100 | 0 | 1600 | 0 | 1600 | 0 | 80 | 5 | 20 | 80 | 600kPa |
| **Danfoss/Siemens 4÷20mA p 25 bar** | F030 | 0100 | 0 | 2500 | 0 | 2500 | 0 | 125 | 5 | 20 | 80 | 600kPa |
| **Danfoss/Siemens 4÷20mA p 40 bar** | F030 | 0100 | 0 | 4000 | 0 | 4000 | 0 | 200 | 5 | 20 | 80 | 600kPa |
| **Siemens QBE2.. P4** | G030 | 0100 | 0 | 400 | 0 | 400 | 0 | 20 | 5 | 20 | 80 | 200kPa |
| **Siemens QBE2.. P10** | G030 | 0100 | 0 | 1000 | 0 | 1000 | 0 | 50 | 5 | 20 | 80 | 600kPa |
| **Siemens QBE2.. P16** | G030 | 0100 | 0 | 1600 | 0 | 1600 | 0 | 80 | 5 | 20 | 80 | 600kPa |
| **Siemens QBE2.. P25** | G030 | 0100 | 0 | 2500 | 0 | 2500 | 0 | 125 | 5 | 20 | 80 | 600kPa |
| **Siemens QBE2.. P40** | G030 | 0100 | 0 | 4000 | 0 | 4000 | 0 | 200 | 5 | 20 | 80 | 600kPa |
| **Signal 0÷10V** | G030 | to be fixed | to be fixed | to be fixed | to be fixed | to be fixed | to be fixed | to be fixed | 5 | 20 | 80 | to be fixed |
| **Signal 4÷20mA** | F030 | to be fixed | to be fixed | to be fixed | to be fixed | to be fixed | to be fixed | to be fixed | 5 | 20 | 80 | to be fixed |
| **tt - servocontrol run** | 12 sec. | Servocontrol Berger STA12B…/Siemens SQN30.251/Siemens SQN72.4A4A20 | | | | | | | | | | |
| **tt - servocontrol run** | 13 sec. | Servocontrol Berger STA13B... | | | | | | | | | | |
| **tt - servocontrol run** | 15 sec. | Servocontrol Berger STA15B... | | | | | | | | | | |
| **tt - servocontrol run** | 30 sec. | Servocontrol Siemens SQL33.03/Siemens SQM10/Siemens SQM50/Siemens SQM54/Berger STM30../ Siemens SQM40.265 | | | | | | | | | | |

**NOTES**

(*) These values are factory set - values must be set during operation at the plant based on the real working temperature/pressure value.

**WARNING**

With pressure sensors, parameters SP1, SCH, SCL, HYS1, HYS3 must be selected and displayed in kPa (kilo Pascal).
(1bar = 100,000Pa = 100kPa)

***Probe electric connection :***

With 7 pins connector version

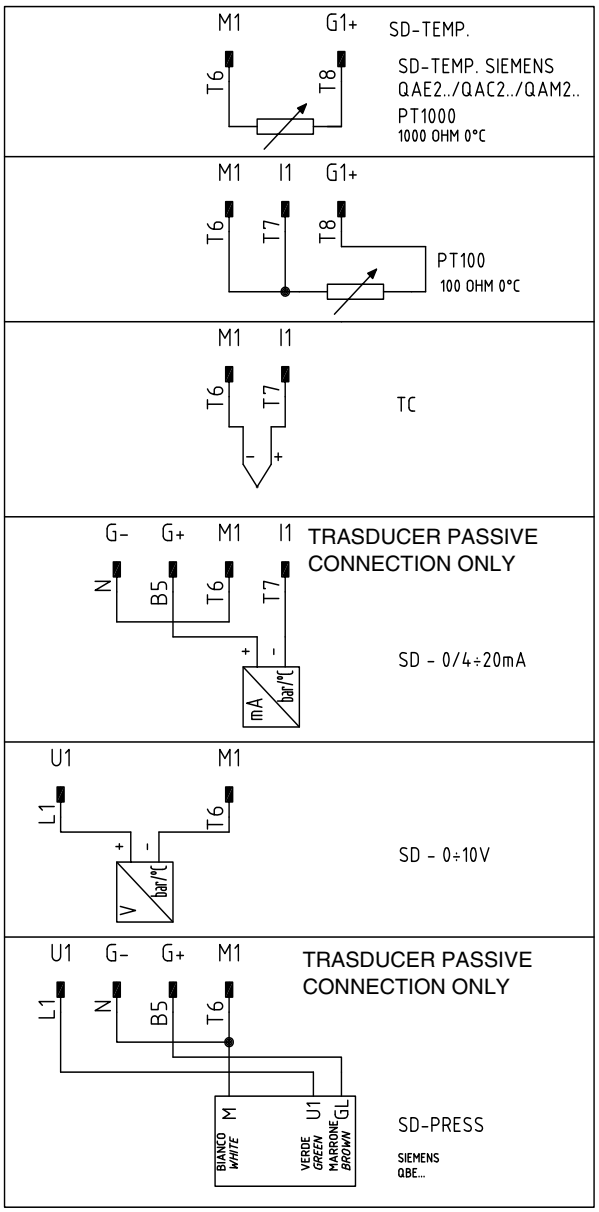


With terminals version

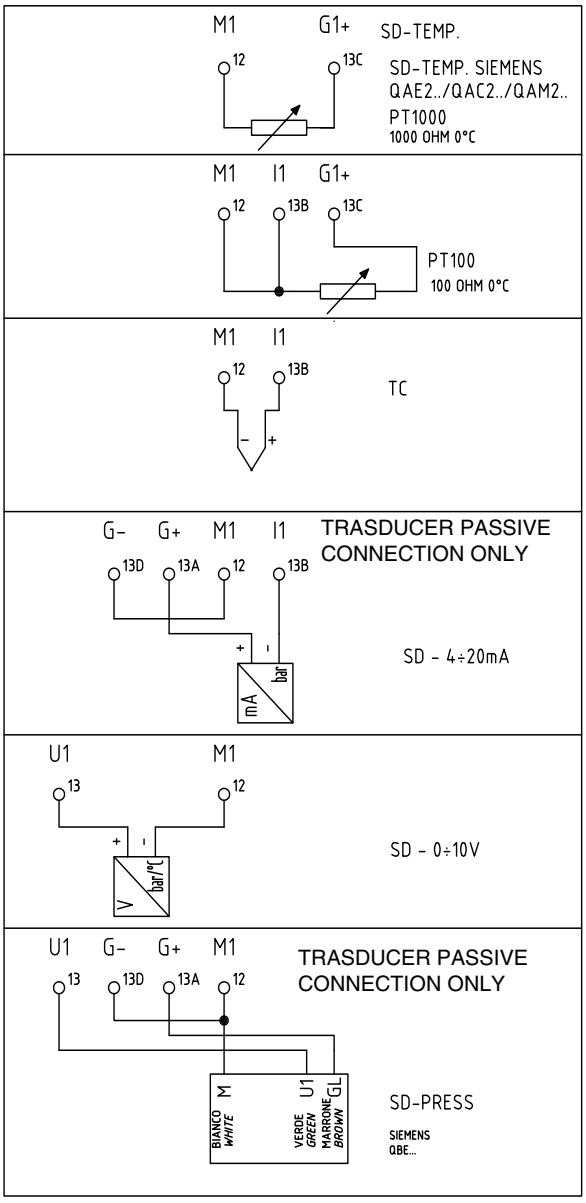

**With external setpoint**

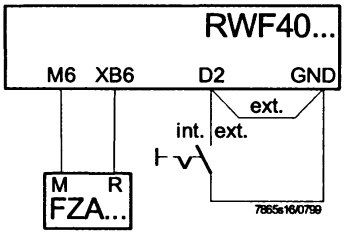


C111 configuration code = X1X1

**With setpoint modified by independent management system**

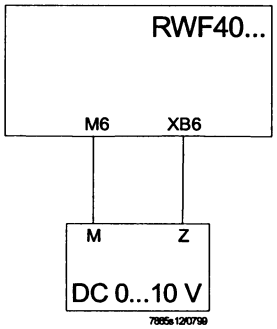


C111 configuration code = X9XX

SCH2= 0.5x (SPH - SPL)
SCL2= -0.5 x (SPH - SPL)

Example:
SPH= max. 130° C
SPL= min. 30° C
SCH2= 0.5 x (130 - 30) = 50
SCL2= -0.5 x (130 - 30) = -50

**APPENDIX: PROBES CONNECTION**

To assure the utmost comfort, the control system needs reliable information, which can be obtained provided the sensors have been installed correctly.

Sensors measure and transmit all variations encountered at their location.

Measurement is taken based on design features (time constant) and according to specific operating conditions.

With wiring run in raceways, the sheath (or pipe) containing the wires must be plugged at the sensor's terminal board so that currents of air cannot affect the sensor's measurements

**Ambient probes (or ambient thermostats)**

**Installation**

The sensors (or room thermostats) must be located in reference rooms in a position where they can take real temperature measurements without being affected by foreign factors.

**It's good to be admired …even better to be effective**

Heating systems: the room sensor must not be installed in rooms with heating units complete with thermostatic valves. Avoid all sources of heat foreign to the system.

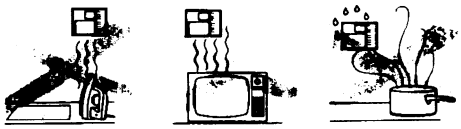

**Location**

On an inner wall on the other side of the room to heating units height above floor 1.5 m, at least 1.5 m away from external sources of heat (or cold)

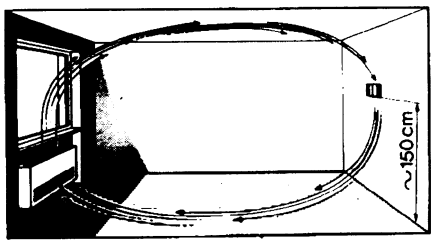


**Installation position to be avoided**

near shelving or alcoves and recesses, near doors or windows, inside outer walls exposed to solar radiation or currents of cold air, on inner walls with heating system pipes, domestic hot water pipes, or cooling system pipes running through them.

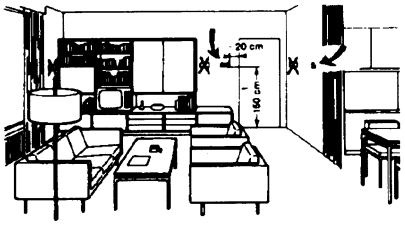


**Outside probes (weather)**

**Installation**

In heating or air-conditioning systems featuring adjustment in response to outside temperature, the sensor's positioning is of paramount importance.

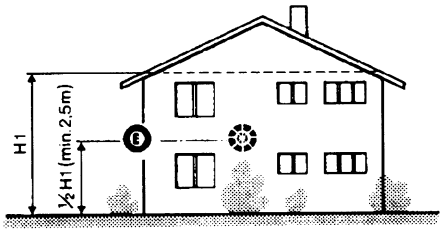


**General rule:** on the outer wall of the building where the living rooms are, never on the south-facing wall or in a position where they will be affected by morning sun. If in any doubt, place them on the north or north-east façade

**Positions to be avoided**

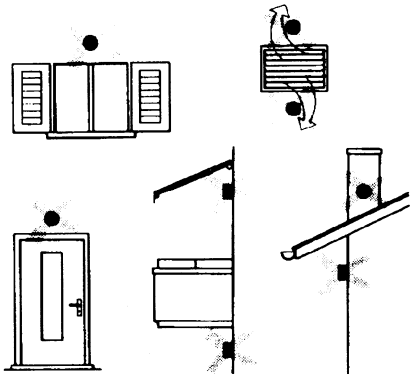

Avoid installing near windows, vents, outside the boiler room, on chimney breasts or where they are protected by balconies, cantilever roofs.

**The sensor must not be painted (measurement error).**

**Duct or pipe sensors**

**Installing temperature sensors**

For measuring outlet air:

- after delivery fan or
- after coil to be controlled, at a distance of at least 0,5 m

For measuring room temperature:

- before return air intake fan and near room's return air intake. For measuring saturation temperature: after mist eliminator.

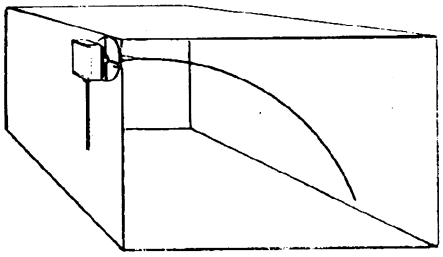

Bend 0.4m sensor by hand (never use tools) as illustrated.

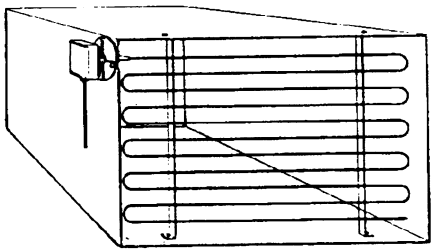

Use whole cross-section of duct, min. distance from walls 50 mm, radius of curvature 10 mm for 2m or 6m sensors.

**Installing combined humidity sensors**

As max. humidity limit sensor on outlet (steam humidifiers).

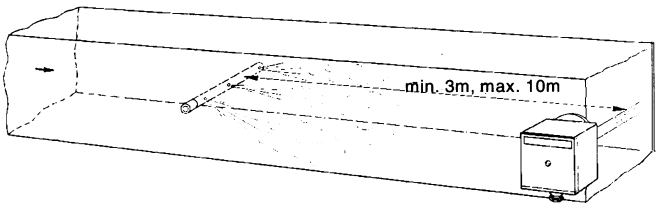


**Installing pressure sensors**

A - installation on ducts carrying fluids at max. temperature 80°C

B - installation on ducts at temperature over 80°C and for refrigerants

C - installation on ducts at high temperatures:

- increase length of siphon
- place sensor at side to prevent it being hit by hot air coming from the pipe.

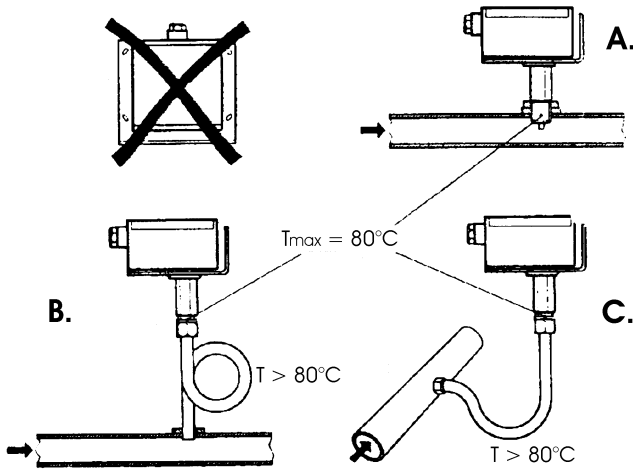


**Installing differential pressure sensors for water**

- Installation with casing facing down not allowed.-With temperature over 80°C, siphons are needed
- To avoid damaging the sensor, you must comply with the following instructions

**when installing:**

- make sure pressure difference is not greater than the value permitted by the sensor
- when there are high static pressures, make sure you insert shutoff valves A-B-C.

**Putting into operation**

start disable

1=open C1=open C

2=open A2=close B

3=open B3=close A

4= close C

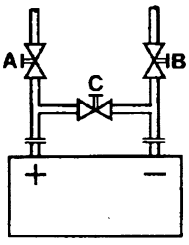

## Immersion or strap-on sensors

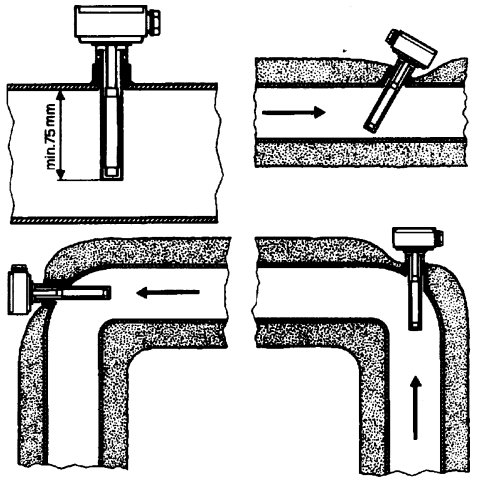


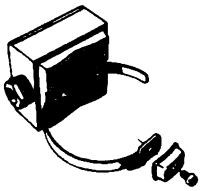

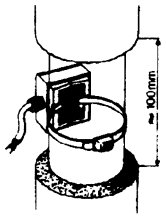


### Immersion probes mounting

Sensors must be installed on the stretch of pipe in which fluid circulates all the time.

The rigid stem (sensing element doing the measuring) must be inserted by at least 75mm and must face the direction of flow.

Recommended locations: on a bend or on a straight stretch of pipe but tilted by 45° and against the flow of fluid.

Protect them to prevent water from infiltrating (dripping gates, condensation from pipes etc.)

### Installing QAD2.. strap-on sensors

Make sure fluid is circulating in the chosen location.

Eliminate insulation and paintwork (including rust inhibitor) on a min. 100mm length of pipe.

Sensors come with straps for pipes up to 100 mm in diameter

## Placing the probes (QAD22.../QAE21.../QAP21.../RCA...)

### With pumps on outlet

**with 3 ways valves / with 4 ways valves**

**Panel system / burner control**

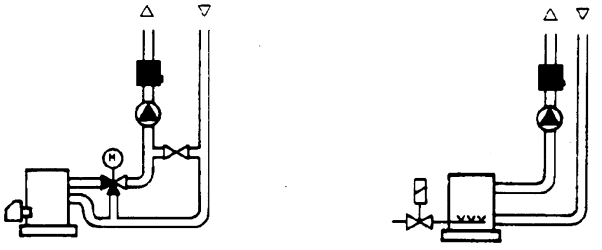

### With pumps on return

**with 3 ways valves / with 4 ways valves**

### Strap-on or immersion sensors?

**QAD2.. strap-on sensors**

Advantages

- 10 sec. time constant
- Installed with system running (no plumbing work)
- Installation can be changed easily if it proves incorrect.

Limits:

Suitable for pipe diameters max. 100 mm

- Can be affected by currents of air etc.

**QAE2... immersion sensors**

Advantages

- Measure "mean" fluid temperature
- No external influence on measurement such as: currents of air, nearby pipes etc.

Limits

- Time constant with sheath: 20 sec.
- Hard to change installation position if it proves incorrect.

## Duct pressure switches and sensors

### Installing differential pressure probes for air

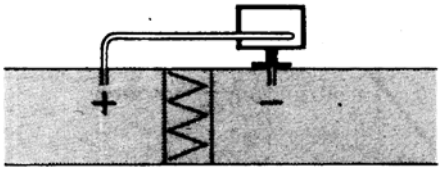


**A - Control a filter (clogging)**

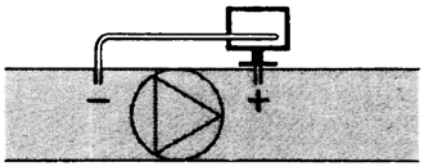


**B - Control a fan (upstream/downstream)**

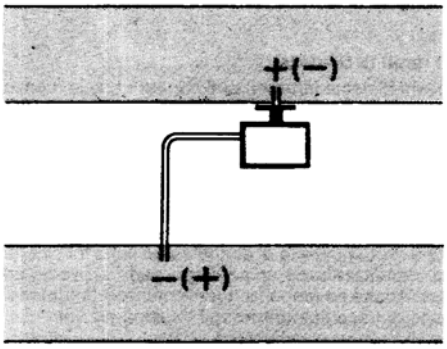


**C - Measurement of difference in pressure between two ducts**

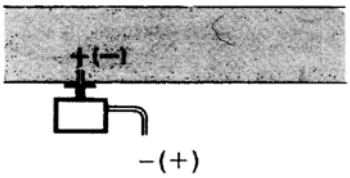


**D - Measurement of difference in pressure between two rooms or of inside of duct and outside**

### Basic principles

**Measuring static pressure (i.e. pressure exerted by air on pipe walls)**

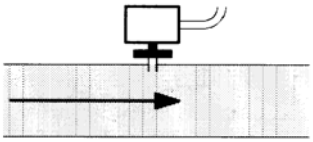

**Measuring dinamic pressure**

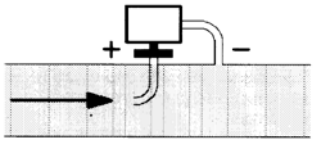


$$Pd = \frac{y\,\vartheta^2}{2g}$$

**Key**

| | |
|---|---|
| y | kg/m3, specific weight of air |
| q | m/s, air speed |
| g | 9.81 m/s2, gravity acceleration |
| Pd | mm C.A., dynamic pressure |

**Measuring total pressure**

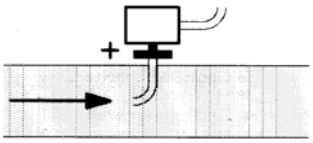


**Pressure probes connection Siemens QBE 2...P... to burner's terminal block**

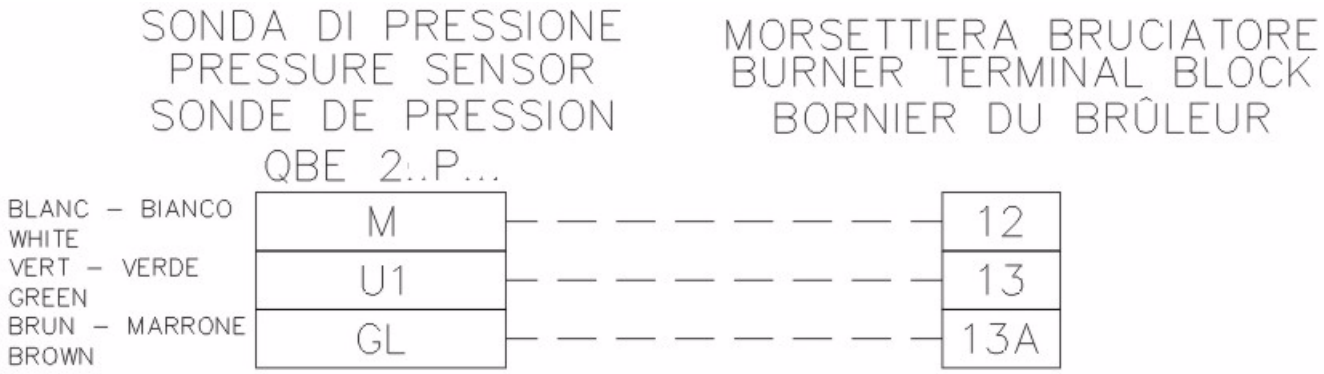

**Spare parts**

| Description | Code |
|---|---|
| Modulator RWF40.000 | 2570112 |
| Adapting frame Siemens ARG40 from RWF32.. to RWF40.. | 2570113 |
| Temperature probe Siemens QAE2120.010A (30÷130°C) | 2560101 |
| Temperature probe Siemens QAM2120.040 (-15÷+50°C) | 2560135 |
| Thermoresistor Pt1000 ø = 6mm L = 100mm (30÷130°C) | 2560188 |
| Thermoresistor Pt1000 ø = 10mm L = 200mm (0÷350°C) | 2560103 |
| Pressure probe Siemens QBE2.. P4 (0÷4bar) | 2560159 |
| Pressure probe Siemens QBE2.. P10 (0÷10bar / signal 0÷10V) | 2560160 |
| Pressure probe Siemens QBE2.. P16 (0÷16bar / signal 0÷10V) | 2560167 |
| Pressure probe Siemens QBE2.. P25 (0÷25bar/ signal 0÷10V) | 2560161 |
| Pressure probe Siemens QBE2.. P40 (0÷40bar / signal 0÷10V) | 2560162 |
| Pressure probe Danfoss MBS3200 p 1,6 (0÷1,6bar / segnale 4÷20mA) | 2560189 |
| Pressure probe Danfoss MBS3200 p 10 (0÷10bar / segnale 4÷20mA) | 2560190 |
| Pressure probe Danfoss MBS3200 p 16 (0÷16bar / segnale 4÷20mA) | 2560191 |
| Pressure probe Danfoss MBS3200 p 25 (0÷25bar / segnale 4÷20mA) | 2560192 |
| Pressure probe Danfoss MBS3200 p 40 (0÷40bar / segnale 4÷20mA) | 2560193 |
| Pressure probe Siemens 7MF1564-3BB00-1AA1 (0÷1,6bar / segnale 4÷20mA) | 25601A3 |
| Pressure probe Siemens 7MF1564-3CA00-1AA1 (0÷10bar / segnale 4÷20mA) | 25601A4 |
| Pressure probe Siemens 7MF1564-3CB00-1AA1 (0÷16bar / segnale 4÷20mA) | 25601A5 |
| Pressure probe Siemens 7MF1564-3CD00-1AA1 (0÷25bar / segnale 4÷20mA) | 25601A6 |
| Pressure probe Siemens 7MF1564-3CE00-1AA1 (0÷40bar / segnale 4÷20mA) | 25601A7 |
| Thermocoupling type K ø = 10mm L = 200mm (0÷1200°C) | 2560142 |
| Thermoresistor Pt100 ø = 10mm L = 200mm (0÷350°C) | 2560145 |

# RWF50.2x & RWF50.3x

***User manual***

M12922CB Rel.1.0 07/2012

**DEVICE INSTALLATION**

Install the device using the relevant tools as shown in the figure.
To wire the device and sensors, follow the instructions on the burner wiring diagram.

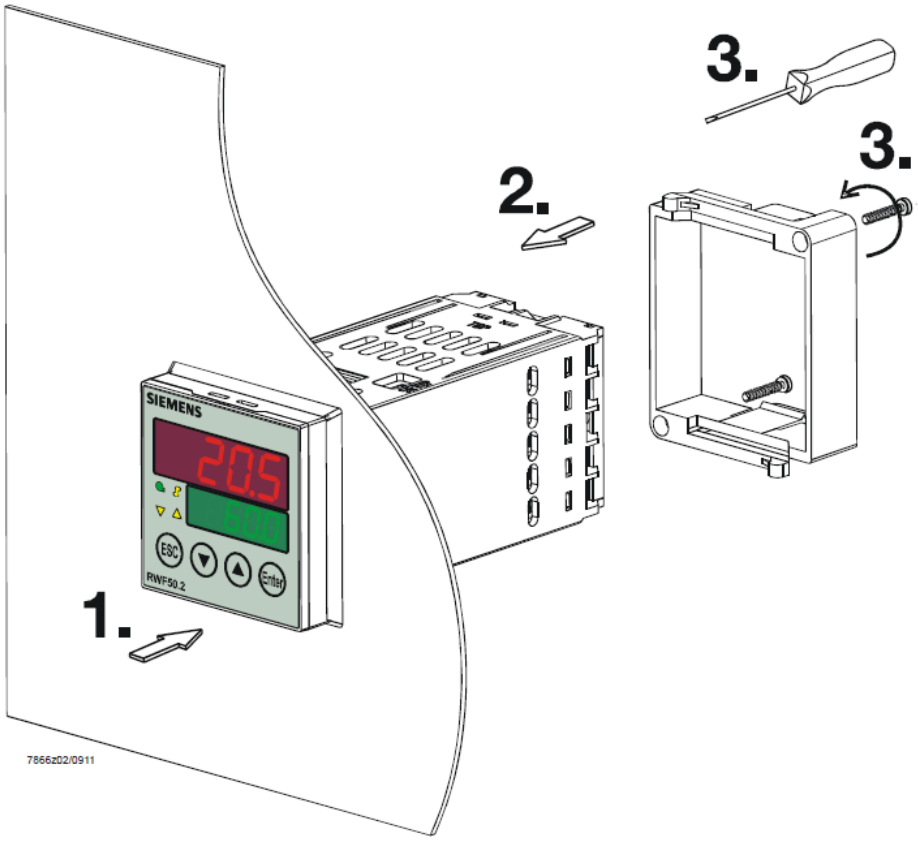


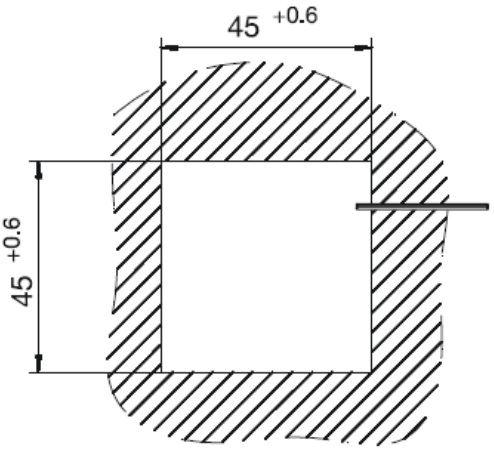

## FRONT PANEL

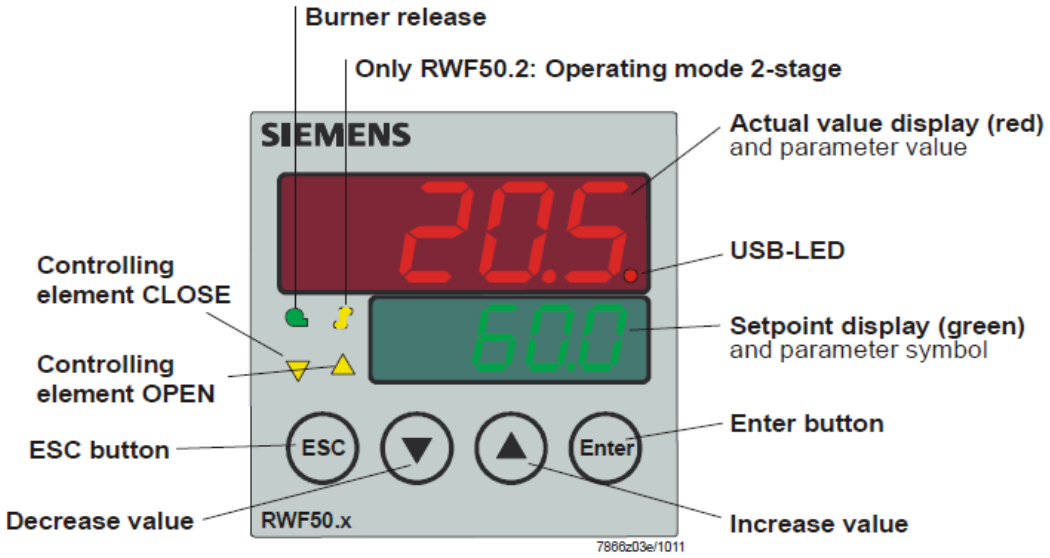


## NAVIGATION MENU

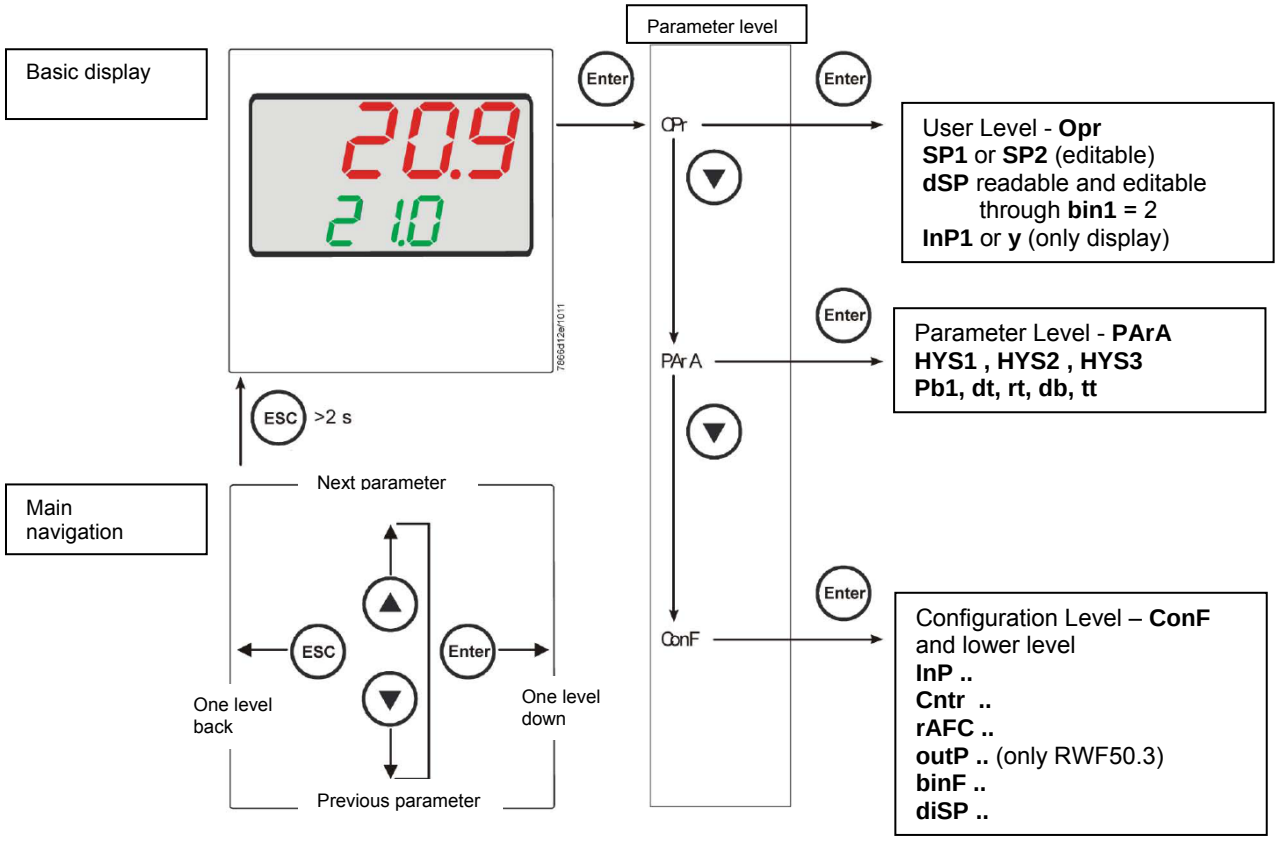

RWF5 is preset good for 90% of applications. However, you can set or edit parameters as follow:

**Set-point: set or modification:**
When the burner is in stand-by, (safety loop open, that is terminals 3-4/T1-T2 on the 7 pole plug open) push the **Enter** button: on the lower display (green) **Opr** appears; push **Enter** again and in the same display **SP1** appears. Push **Enter** again and the lower display (green **SP1**) flashes. Using the **up and down arrows** change the set-point on the upper display (red).Push **Enter** to confirm and push **ESC** more times to get the home position.

**PID parameters set and modifications (see table below):**

- Push **Enter** button, on the green display **Opr** appears; using the **down arrow,** scroll until group **PArA** is reached and push **Enter**.
- on the green display **Pb1** e appears and on the red one the set parameter.
- Push is sequence the **down or up** arrow the menu is scrolled.
- Push **Enter** to select and the **arrows** to choose the desired value. **Enter** to confirm.

| Parameter | Display | Range | Factory setting | Remarks |
|---|---|---|---|---|
| Proportional band | PB.1 | 1… 9999 digit | 10 | Typical value for temperature |
| Derivative action | dt | 0… 9999 sec. | 80 | Typical value for temperature |
| Integral action | rt | 0… 9999 sec. | 350 | Typical value for temperature |
| Dead band (*) | db | 0… 999,9 digit | 1 | Typical value |
| Servocontrol running time | tt | 10… 3000 sec. | 15 | Set servocontrol running time |
| Switch-on differential (*) | HYS1 | 0,0… -1999 digit | -5 | Value under setpoint below which the burner switches back on (1N-1P closes) |
| Switch-off differential 2° stage (*) | HYS2 | 0,0 … HYS3 | 3 | (enable only with parameter **bin1** = 4) |
| Upper switch-off differential (*) | HYS3 | 0,0… 9999 digit | 5 | Value over setpoint above which the burner switches off (1N-1P opens) |
| Switch-on differential on cooling controller (*) | HYS4 | 0,0… 9999 digit | 5 | Do not used (enable only with parameter **CACt** = 0) |
| Switch-off differential 2° stage on cooling controller (*) | HYS5 | HYS6…0,0 digit | 5 | Do not used (enable only with parameters **CACt** = 0 and **bin1** = 4) |
| Upper switch-off differential on cooling controller (*) | HYS6 | 0,0… -1999 digit | 5 | Do not used (enable only with parameter **CACt** = 0) |
| Delay modulation | q | 0,0… 999,9 digit | 0 | Do not alter |

(*)Parameters affected by setting of decimal place (**ConF > dISP** parameter **dECP**)

**Setting the kind of sensor to be connected to the device:**

- push the **Enter** button: on the lower display (green) **Opr** appears. Using the **up and down arrows** find **ConF.** Push **Enter** to confirm.
- Now on the green display the group **InP** appears. Push **Enter** and **InP1** is displaied. Enter to confirm.
- You are inside **InP1**; the green display shows **Sen1 (sensor type)**, while the red display shows the chosen sensor code
- Push **Enter** to enter the **Sen1** parameter, then choose the desired sensor using the **arrows.** Push **Enter** to confirm and **ESC** to escape.
- Once selected the sensor, you can modify all the other parameters using **up and down arrows** according to the tables here below.

## ConF > InP >InP1

| Parameter | Value | Description |
|---|---|---|
| SEn1<br>type of sensor for analog input 1 | **1** | **Pt100 3 fili** |
| | 2 | Pt100 2 fili |
| | 3 | Pt1000 3 fili |
| | 4 | Pt1000 2 fili |
| | 5 | Ni1000 3 fili |
| | 6 | Ni1000 2 fili |
| | 7 | 0 ÷ 135 ohm |
| | 15 | 0 ÷ 20mA |
| | 16 | 4 ÷ 20mA |
| | 17 | 0 ÷ 10V |
| | 18 | 0 ÷ 5V |
| | 19 | 1 ÷ 5V |
| OFF1<br>sensor offset | -1999..**0**.. +9999 | Using the measured value correction (offset), a measured value can be corrected to a certain degree, either up or down |
| SCL1<br>scale low level | -1999..**0**.. +9999 | In the case of a measuring transducer with standard signal, the physical signal is assigned a display value here<br>(for input ohm, mA, V) |
| SCH1<br>scale high level | -1999..**100**.. +9999 | In the case of a measuring transducer with standard signal, the physical signal is assigned a display value here<br>(for input ohm, mA, V) |
| dF1<br>digital filter | 0…**0,6**…100 | Is used to adapt the digital 2nd order input filter<br>(time in s; 0 s = filter off) |
| Unit<br>temperature unit | **1**<br>2 | **1 = degrees Celsius**<br>2 = degrees Fahrenheit |

(**bold** = factory settings)

**Remark:**
RWF50.2 e RWF50.3 cannot be connected to thermocouples.
If thermocouples have to be connected, convert the signal to a 4-20 mA one and set the RWF accordingly.

## ConF > Cntr

| Parameter | Value | Description |
|---|---|---|
| CtYP<br>controller type | **1**<br>2 | **1 = 3-position controller (open-stop-close only RWF50.2)**<br>2 = continuative action controller (only RWF50.3) |
| CACt<br>control action | **1**<br>0 | **1 = heating controller**<br>0 = cooling controller |
| SPL<br>least value of the set-point range | -1999..**0**..+9999 | set-point limitation prevents entry of values outside the defined range |
| SPH<br>maximum value of the set-point range | -1999..**100**..+9999 | set-point limitation prevents entry of values outside the defined range |
| oLLo<br>set-point limitation start, operation limit low | **-1999**.... +9999 | lower working range limit |
| oLHi<br>set-point limitation end, operation limit high | -1999.... **+9999** | upper working range limit |

(**bold** = factory settings)

## ConF > rAFC

**Activation boiler shock termic protetion:**
RWF50.. can activate the thermal shock protection only on sites where the set-point is lower than 250°C and according to **rAL** parameter.

| Parameter | Value | Description |
|---|---|---|
| FnCT<br>function | **0**<br>1<br>2 | Choose type of range degrees/time<br>**0 = deactivated**<br>1 = Kelvin degrees/minute<br>2 = Kelvin degrees/hour |
| rASL<br>ramp rate | **0,0 …** 999,9 | Slope of thermal shock protection (only with functions 1 and 2) |
| toLP<br>tolerance band ramp | **0**…9999 | width of tolerance band (in K) about the set-point<br>**0 = tolerance band inactive**<br> 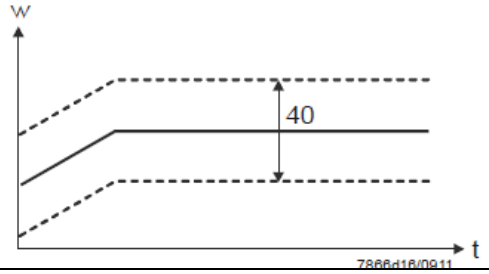 |
| rAL<br>ramp limit | **0**…250 | Ramp limit. When this value is lower than the temperature set-point, the RWF controls the output increasing the temp set point step by step according to rASL. If this is over the temp set point, the control is performed in cooling. |

(**bold** = factory settings)

## ConF > OutP (parameter under group only for RWF50.3)

| Parameter | Value | Description |
|---|---|---|
| FnCt<br>tipo di controllo | <br>1<br>**4** | 1 = analog input 1 doubling with possibility to convert (depending on par **SiGn**)<br>**4 = modulation controller** |
| SiGn<br>type of output signal | <br>**0**<br>1<br>2 | physical output signal (terminals A+, A-)<br>**0 = 0÷20mA**<br>1 = 4÷20mA<br>2 = 0÷10V |
| rOut<br>Value when out of input range | <br><br>**0**…101 | <br><br>signal (in percent) when measurement range is crossed |
| oPnt<br>zero point | <br><br><br>-1999…**0**..+9999 | value range of the output variable is assigned to a physical output signal Per default, the setting corresponds to 0...100% angular positioning for the controller outputs (terminals A+, A-) (effective only with **FnCt** = 1) |
| End<br>End value | <br><br><br>-1999…**100**..+9999 | value range of the output variable is assigned to a physical output signal Per default, the setting corresponds to 0...100% angular positioning for the controller outputs (terminals A+, A-) (effective only with **FnCt** = 1) |

(**bold** = factory settings)

## ConF > binF

| Parameter | Value | Description |
|---|---|---|
| bin1<br>digital inputs<br>(terminals DG - D1) | <br><br><br>**0**<br>1<br>2<br>4 | **0 = without function**<br>1 = set-point changeover (SP1 / SP2)<br>2 = set-point shift (**Opr** > **dSP** parameter = value of set-point modify)<br>4 = changeover of operating mode<br>open – modulating operation;<br>close – 2 stage operation. |

(**bold** = factory settings)

## ConF > dISP

| Parameter | Value | Description |
|---|---|---|
| diSU<br>upper display<br>(red) | <br>0<br>**1**<br>4<br>6<br>7 | display value for upper display:<br>0 = display power-off<br>**1 = analog input value**<br>4 = Controller's angular positioning<br>6 = set-point value<br>7 = end value with thermal shock protection |
| diSL<br>lower display<br>(green) | <br>0<br>1<br>4<br>**6**<br>7 | display value for lower display:<br>0 = display power-off<br>1 = analog input value<br>4 = Controller's angular positioning<br>**6 = set-point value**<br>7 = end value with thermal shock protection |
| tout<br>timeout | <br>0..**180**..250 | time (s) on completion of which the controller returns automatically to the basic display, if no button is pressed |
| dECP<br>decimal point | **0**<br>1<br>2 | **0 = no decimal place**<br>1 = one decimal place<br>2 = two decimal places |
| CodE<br>level lockout | **0**<br>1<br>2<br>3 | **0 = no lockout**<br>1 = configuration level lockout (ConF)<br>2 = Parameter and configuration level lockout (PArA & ConF)<br>3 = keyboard lockout |

(**bold** = factory settings)

**Manual control :**

- in order to manual change the burner load, while firing keep pushing the **ESC** button for more than 5 s; on the lower green display **Hand** appears.
- using the **UP** and **DOWN** arrows, the load varies.
- Keep pushing the **ESC** button for getting the normal operation again.
- **NB:** every ime the device shuts the burner down (start led switched off - contact 1N-1P open), the manual control is not active.

**Device self-setting (auto-tuning):**

If the burner in the steady state does not respond properly to heat generator requests, you can activate the Device's self-setting function, which recalculates PID values for its operation, deciding which are most suitable for the specific kind of request

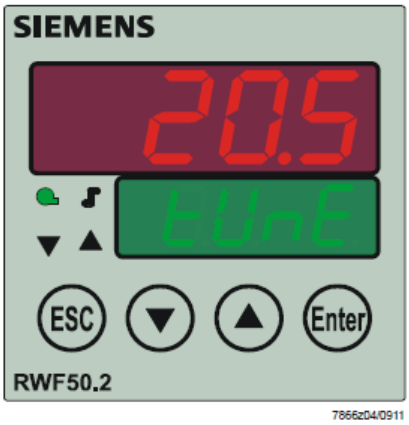


Follow the below instructions:
push the **UP** and **DOWN** arrows for more than 5 s; on the green lower display **TUNE** appears. Now the device pushes the burner to increase and decrease its output. During this time, the device calculates PID parameters (**Pb1, dt** and **rt**). After the calculations, the TUNE is automatically deactivated and the device has already stored them.
In order to stop the Auto-tuning function while it works, push again the **UP** and **DOWN** arrows for more than 5 s. The calculated PID parameters can be manually modified following the previously described instructions.

**Display of software version :**

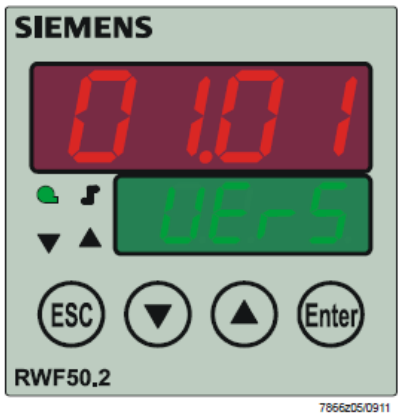


The software version is shown by pushing **Enter + UP arrow** on the upper display

**Electric connection :**

With 7 pins connector version

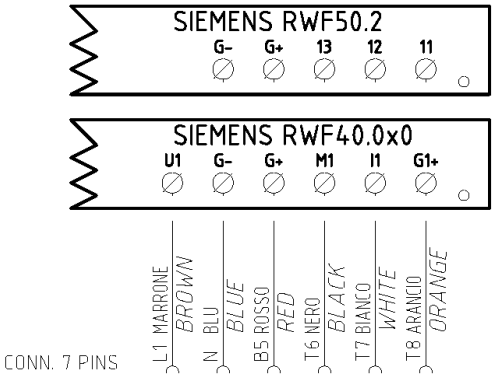


With terminals version

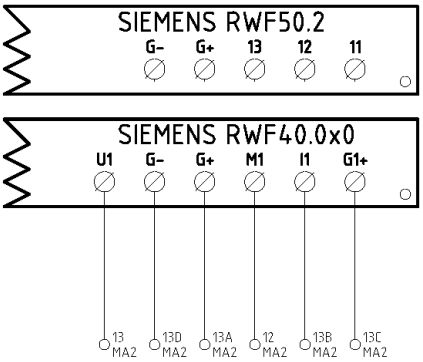


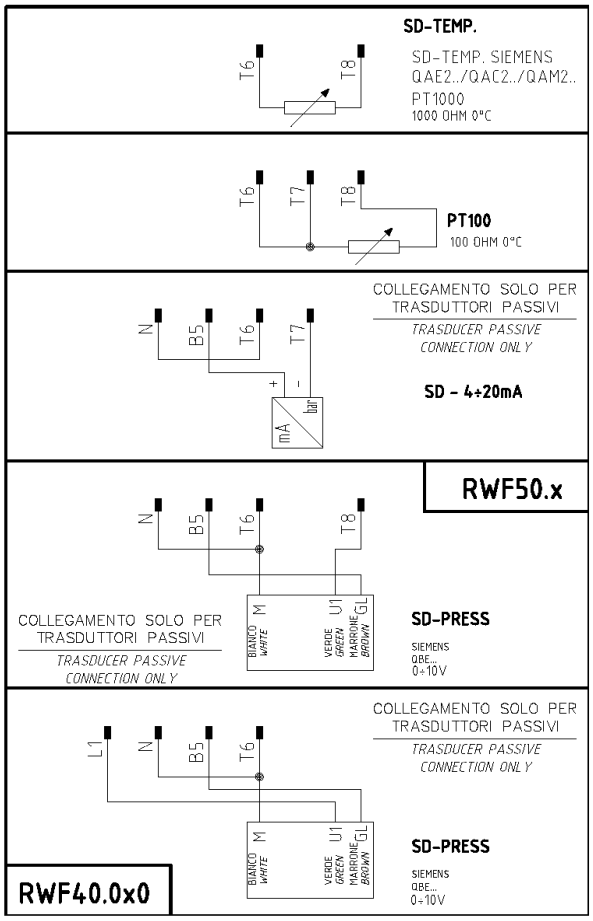


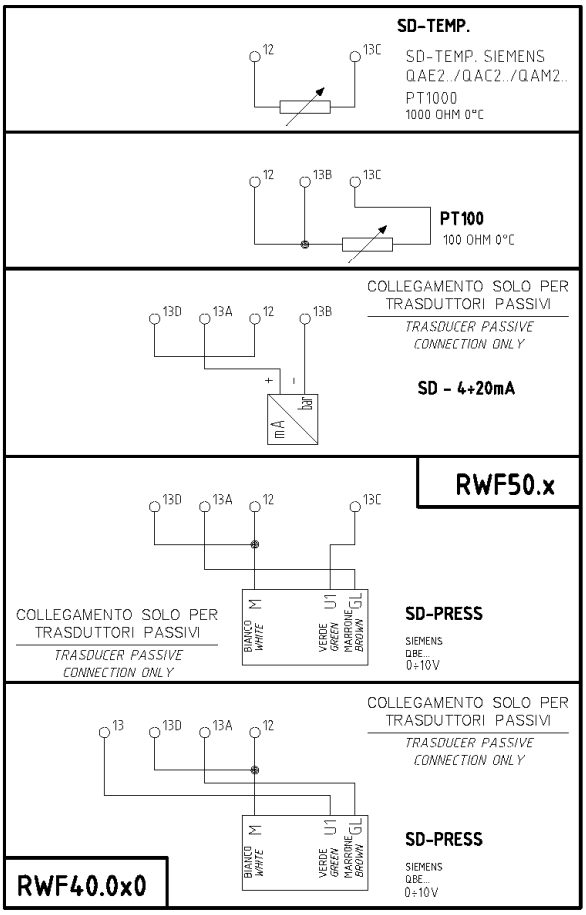


Matches terminals between RWF50.2 and RWF40.0x0

**Parameters summarising for RWF50.2x:**

| Navigation menù / Types of probe | Conf | | | | | Conf | | | PArA | | | | | | Opr |
|---|---|---|---|---|---|---|---|---|---|---|---|---|---|---|---|
| | Inp | | | | | Cntr | | diSP | | | | | | | |
| | Inp1 | | | | | | | | | | | | | | |
| | SEn1 | OFF1 | SCL1 | SCH1 | Unit | SPL | SPH | dECP | Pb. 1 | dt | rt | tt | HYS1 (*) | HYS3 (*) | SP1 (*) |
| Siemens QAE2120… | 6 | 0 | needless | needless | 1 | 30 | 95 | 1 | 10 | 80 | 350 | (#) | -5 | 5 | 80 °C |
| Siemens QAM2120.. | 6 | 0 | needless | needless | 1 | 0 | 80 | 1 | 10 | 80 | 350 | (#) | -2,5 | 2,5 | 40°C |
| Pt1000 (130°C max.) | 4 | 0 | needless | needless | 1 | 30 | 95 | 1 | 10 | 80 | 350 | (#) | -5 | 5 | 80°C |
| Pt1000 (350°C max.) | 4 | 0 | needless | needless | 1 | 0 | 350 | 1 | 10 | 80 | 350 | (#) | -5 | 10 | 80°C |
| Pt100 (130°C max.) | 1 | 0 | needless | needless | 1 | 0 | 95 | 1 | 10 | 80 | 350 | (#) | -5 | 5 | 80°C |
| Pt100 (350°C max) | 1 | 0 | needless | needless | 1 | 0 | 350 | 1 | 10 | 80 | 350 | (#) | -5 | 10 | 80°C |
| Probe 4÷20mA / 0÷1,6bar | 16 | 0 | 0 | 160 | needless | 0 | 160 | 0 | 5 | 20 | 80 | (#) | 0 | 20 | 100 kPa |
| Probe 4÷20mA / 0÷3bar | 16 | 0 | 0 | 300 | needless | 0 | 300 | 0 | 5 | 20 | 80 | (#) | 0 | 20 | 200 kPa |
| Probe 4÷20mA / 0÷10bar | 16 | 0 | 0 | 1000 | needless | 0 | 1000 | 0 | 5 | 20 | 80 | (#) | 0 | 50 | 600 kPa |
| Probe 4÷20mA / 0÷16bar | 16 | 0 | 0 | 1600 | needless | 0 | 1600 | 0 | 5 | 20 | 80 | (#) | 0 | 80 | 600 kPa |
| Probe 4÷20mA / 0÷25bar | 16 | 0 | 0 | 2500 | needless | 0 | 2500 | 0 | 5 | 20 | 80 | (#) | 0 | 125 | 600 kPa |
| Probe 4÷20mA / 0÷40bar | 16 | 0 | 0 | 4000 | needless | 0 | 4000 | 0 | 5 | 20 | 80 | (#) | 0 | 200 | 600 kPa |
| Siemens QBE2002 P4 | 17 | 0 | 0 | 400 | needless | 0 | 400 | 0 | 5 | 20 | 80 | (#) | 0 | 20 | 200 kPa |
| Siemens QBE2002 P10 | 17 | 0 | 0 | 1000 | needless | 0 | 1000 | 0 | 5 | 20 | 80 | (#) | 0 | 50 | 600 kPa |
| Siemens QBE2002 P16 | 17 | 0 | 0 | 1600 | needless | 0 | 1600 | 0 | 5 | 20 | 80 | (#) | 0 | 80 | 600 kPa |
| Siemens QBE2002 P25 | 17 | 0 | 0 | 2500 | needless | 0 | 2500 | 0 | 5 | 20 | 80 | (#) | 0 | 125 | 600 kPa |
| Siemens QBE2002 P40 | 17 | 0 | 0 | 4000 | needless | 0 | 4000 | 0 | 5 | 20 | 80 | (#) | 0 | 200 | 600 kPa |
| Segnale 0÷10V | 17 | 0 | to be fixed | to be fixed | needless | to be fixed | to be fixed | to be fixed | 5 | 20 | 80 | (#) | to be fixed | to be fixed | to be fixed |
| Segnale 4÷20mA | 16 | 0 | to be fixed | to be fixed | needless | to be fixed | to be fixed | to be fixed | 5 | 20 | 80 | (#) | to be fixed | to be fixed | to be fixed |

**NOTE** :
(#) tt – servo control run time
SQL33 ; STM30; SQM10; SQM40; SQM50; SQM54 = **30** (secondi) - STA12B3.41; SQN30.251; SQN72.4A4A20 = **12** (secondi)
(*)These values are factory set - values **must be** set during operation at the plant based on the real working temperature/pressure value.
**WARNING :** With pressure probes the parameters SP1, SCH, SCL, HYS1, HYS3 must be selected, and visualized in kPa (kilo Pascal). (1bar = 100.000Pa = 100kPa)

## APPENDIX: PROBES CONNECTION

To assure the utmost comfort, the control system needs reliable information, which can be obtained provided the sensors have been installed correctly. Sensors measure and transmit all variations encountered at their location.

Measurement is taken based on design features (time constant) and according to specific operating conditions.With wiring run in raceways, the sheath (or pipe) containing the wires must be plugged at the sensor's terminal board so that currents of air cannot affect the sensor's measurements.

**Ambient probes (or ambient thermostats)**

**Installation**

The sensors (or room thermostats) must be located in

reference rooms in a position where they can take real temperature measurements without being affected by

foreign factors.

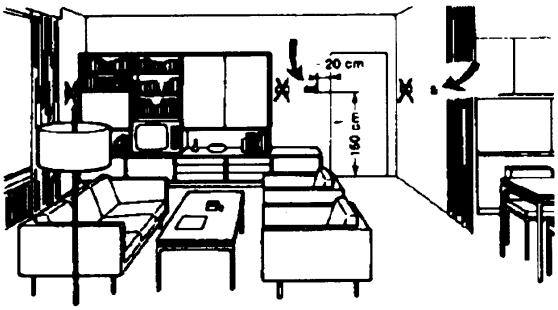


**Outside probes (weather)**

**Installation**

In heating or air-conditioning systems featuring adjustment in response to outside temperature, the sensor's positioning is of paramount importance.

**It's good to be admired …even better to be effective**

Heating systems: the room sensor must not be installed in rooms with heating units complete with thermostatic valves. Avoid all sources of heat foreign to the system.

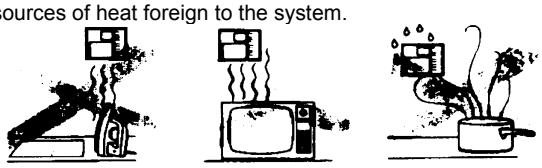

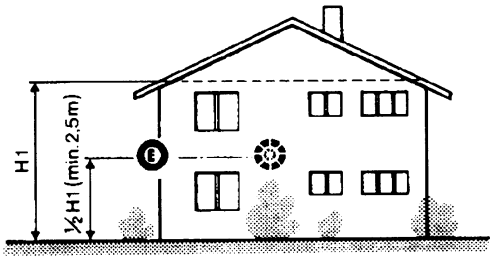


**General rule:** on the outer wall of the building where the living rooms are, never on the south-facing wall or in a position where they will be affected by morning sun. If in any doubt, place them on the north or north-east façade.

**Location**

On an inner wall on the other side of the room to heating unitsheight above floor 1.5 m, at least 1.5 m away from external sources of heat (or cold).

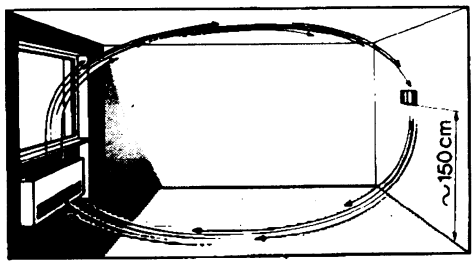


**Positions to be avoided**

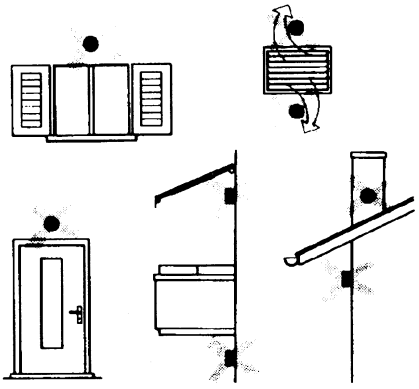

**Installation position to be avoided**

near shelving or alcoves and recesses, near doors or win-dows, inside outer walls exposed to solar radiation or currents of cold air, on inner walls with heating system pipes, domestic hot water pipes, or cooling system pipes running through them.

Avoid installing near windows, vents, outside the boiler room, on chimney breasts or where they are protected by balconies, cantilever roofs.

**The sensor must not be painted (measurement error).**

**Duct or pipe sensors**

**Installing temperature sensors**

For measuring outlet air:

- after delivery fan or
- after coil to be controlled, at a distance of at least 0,5 m

For measuring room temperature:

- before return air intake fan and near room's return airintake. For measuring saturation temperature: after mist eliminator.

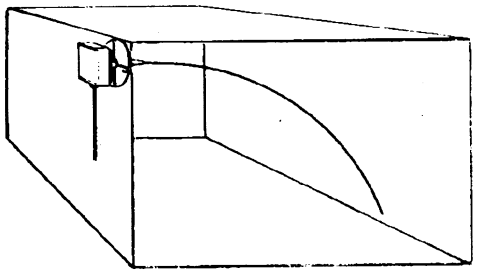

Bend 0.4m sensor by hand (never use tools) as illustrated.

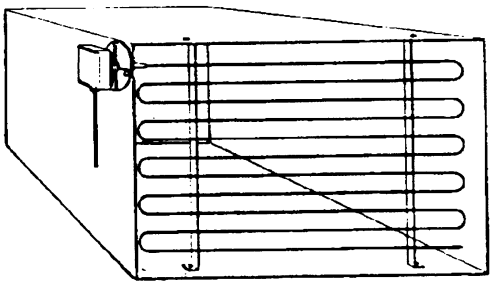

Use whole cross-section of duct, min. distance from walls 50 mm, radius of curvature 10 mm for 2m or 6m sensors.

**Installing combined humidity sensors**

As max. humidity limit sensor on outlet (steam humidifiers).

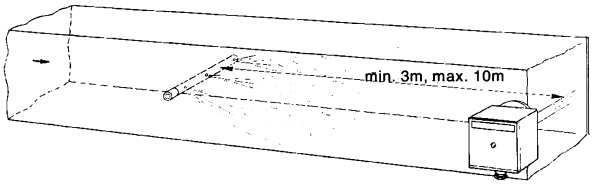


**Installing pressure sensors**

A - installation on ducts carrying fluids at max. temperature 80°C

B - installation on ducts at temperature over 80°C and for refrigerants

C - installation on ducts at high temperatures:

- increase length of siphon
- place sensor at side to prevent it being hit by hot air coming from the pipe.

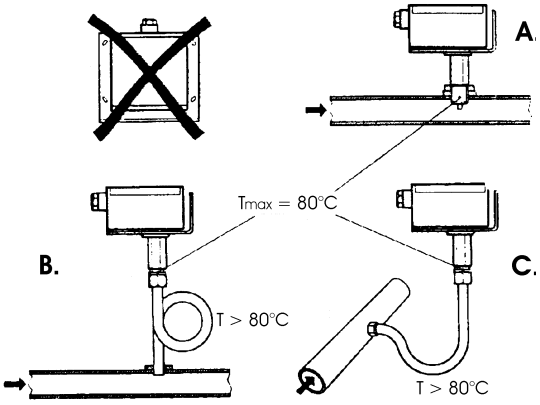


**Installing differential pressure sensors for water**

- Installation with casing facing down not allowed.-With temperature over 80°C, siphons are needed.
- To avoid damaging the sensor, you must comply with the following instructions

**when installing:**

- make sure pressure difference is not greater than thevalue permitted by the sensor
- when there are high static pressures, make sure you insert shutoff valves A-B-C.

**Putting into operation**

Start disable

1=open C1=open C

2=open A2=close B

3=open B3=close A

4= close C

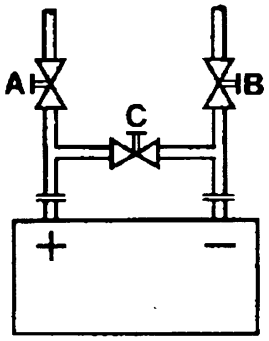

**Immersion or strap-on sensors**

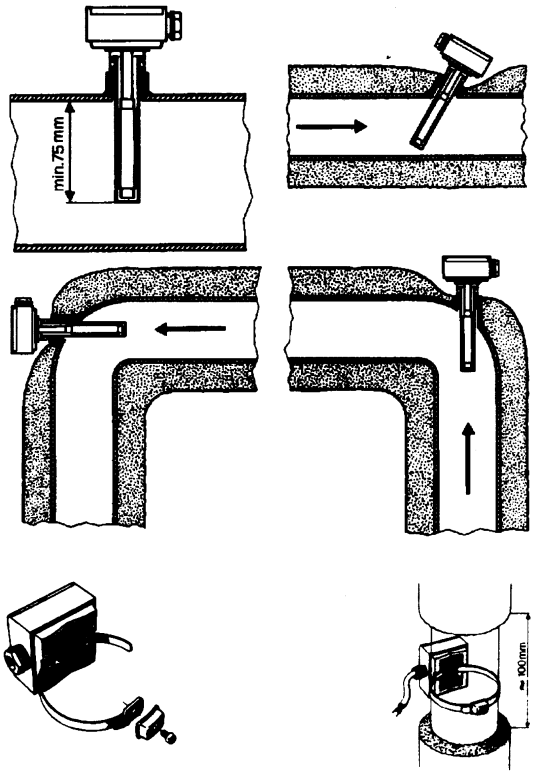





**Placing the probes (QAD22.../QAE21.../QAP21.../RCA...)**

**With pumps on outlet**

**with 3 ways valves / with 4 ways valves**

**Panel system / burner control**

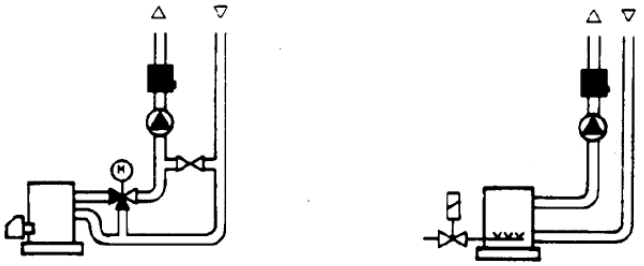

**With pumps on return**

**with 3 ways valves / with 4 ways valves**

**Immersion probes installation**

Sensors must be installed on the stretch of pipe in which fluid circulates all the time.

The rigid stem (sensing element doing the measuring) must be inserted by at least 75mm and must face the direction of flow.

Recommended locations: on a bend or on a straight stretch of pipe but tilted by 45° and against the flow of fluid.

Protect them to prevent water from infiltrating (dripping gates, condensation from pipes etc.)

**Installing QAD2.. strap-on sensors**

Make sure fluid is circulating in the chosen location.

Eliminate insulation and paintwork (including rust inhibitor) on a min. 100mm length of pipe.

Sensors come with straps for pipes up to 100 mm in diameter

**Strap-on or immersion sensors?**

**QAD2.. strap-on sensors**

Advantages :

- 10 sec. time constant
- Installed with system running (no plumbing work)
- Installation can be changed easily if it proves incorrect.

Limits:

- Suitable for pipe diameters max. 100 mm
- Can be affected by currents of air etc.

**QAE2... immersion sensors**

Advantages:

- Measure "mean" fluid temperature
- No external influence on measurement such as: currents of air, nearby pipes etc.

Limits:

- Time constant with sheath: 20 sec.
- Hard to change installation position if it proves incorrect.

**Installing differential pressure probes for air**

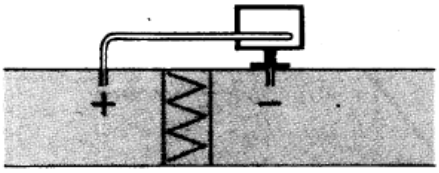


**A - Control a filter (clogging)**

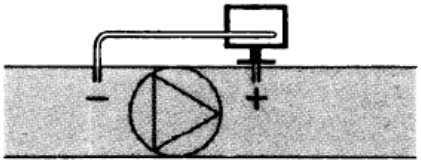


**B - Control a fan (upstream/downstream)**

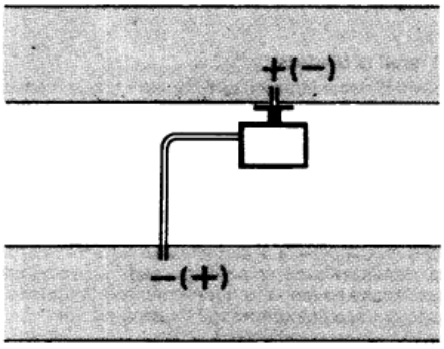


**C - Measurement of difference in pressure between two ducts**

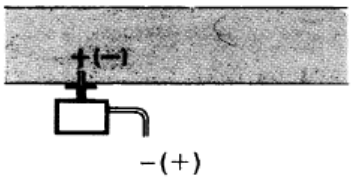


**D - Measurement of difference in pressure between two rooms or of inside of duct and outside**

**Basic principles**

**Measuring static pressure(i.e. pressure exerted by air on pipe walls)**

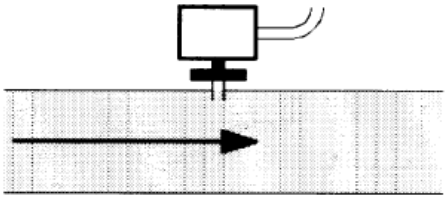

**Measuring dinamic pressure**

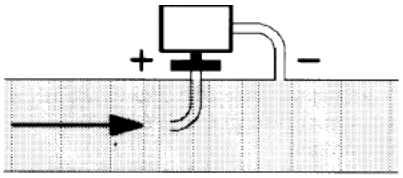


$$Pd = \frac{y\,\vartheta^2}{2g}$$

**Key**

| | |
|---|---|
| y | Kg/m$^3$, specific weight of air |
| □ | m/s, air speed |
| g | 9.81 m/s$^2$ gravity acceleration |
| Pd | mm C.A., dynamic pressure |

**Measuring total pressure**

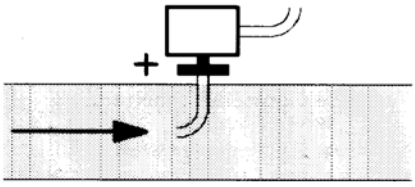

**Spare parts**

| Description | Code |
|---|---|
| Modulator RWF50.2 (uscita a 3 punti - apri, fermo, chiudi) | 2570148 |
| Modulator RWF50.3 (uscita continua 0÷20mA, 4÷20mA, 0÷10V) | 2570149 |
| Temperature probe Siemens QAE2120.010A (30÷130°C) | 2560101 |
| Temperature probe Siemens QAM2120.040 (-15÷+50°C) | 2560135 |
| Thermoresistor Pt1000 ø6mm L100mm (30÷130°C) | 2560188 |
| Thermoresistor Pt1000 ø10mm L200mm (0÷350°C) | 2560103 |
| Thermoresistor Pt100 ø10mm L200mm (0÷350°C) | 2560145 |
| Thermoresistor Pt100 ø8mm L85mm (0÷120°C) | 25601C3 |
| Pressure probe Siemens QBE2.. P4 (0÷4bar) | 2560159 |
| Pressure probe Siemens QBE2.. P10 (0÷10bar / signal 0÷10V) | 2560160 |
| Pressure probe Siemens QBE2.. P16 (0÷16bar / signal 0÷10V) | 2560167 |
| Pressure probe Siemens QBE2.. P25 (0÷25bar / signal 0÷10V) | 2560161 |
| Pressure probe Siemens QBE2.. P40 (0÷40bar / signal 0÷10V) | 2560162 |
| Pressure probe Danfoss MBS 3200 P 1,6 (0÷1,6bar / signal 4÷20mA) | 2560189 |
| Pressure probe Danfoss MBS 3200 P 10 (0÷10bar / signal 4÷20mA) | 2560190 |
| Pressure probe Danfoss MBS 3200 P 16 (0÷16bar / signal 4÷20mA) | 2560191 |
| Pressure probe Danfoss MBS 3200 P 25 (0÷25bar / signal 4÷20mA) | 2560192 |
| Pressure probe Danfoss MBS 3200 P 40 (0÷40bar / signal 4÷20mA) | 2560193 |
| Pressure probe Siemens 7MF1565-3BB00-1AA1 (0÷1,6bar / signal 4÷20mA) | 25601A3 |
| Pressure probe Siemens 7MF1565-3CA00-1AA1 (0÷10bar / signal 4÷20mA) | 25601A4 |
| Sonda di pressione Siemens 7MF1565-3CB00-1AA1 (0÷16bar / signal | 25601A5 |
| Pressure probe Siemens 7MF1565-3CD00-1AA1 (0÷25bar / signal 4÷20mA) | 25601A6 |
| Pressure probe Siemens 7MF1565-3CE00-1AA1 (0÷40bar / signal 4÷20mA) | 25601A7 |
| Pressure probe Gefran E3E B1V6 MV (0÷1,6bar / segnale 4÷20mA) | 25601C4 |
| Pressure probe Danfoss E3E B01D MV (0÷10bar / segnale 4÷20mA) | 25601C5 |
| Pressure probe Danfoss E3E B16U MV (0÷16bar / segnale 4÷20mA) | 25601C6 |
| Pressure probe Danfoss E3E B25U MV (0÷25bar / segnale 4÷20mA) | 25601C7 |
| Pressure probe Danfoss E3E B04D MV (0÷40bar / segnale 4÷20mA)) | 25601C8 |

Note: Specifications and data subject to change. Errors and omissions excepted.

# KM3 Modulator

**USER MANUAL**

M12927CA Rel.1.0 10/2020

## MOUNTING

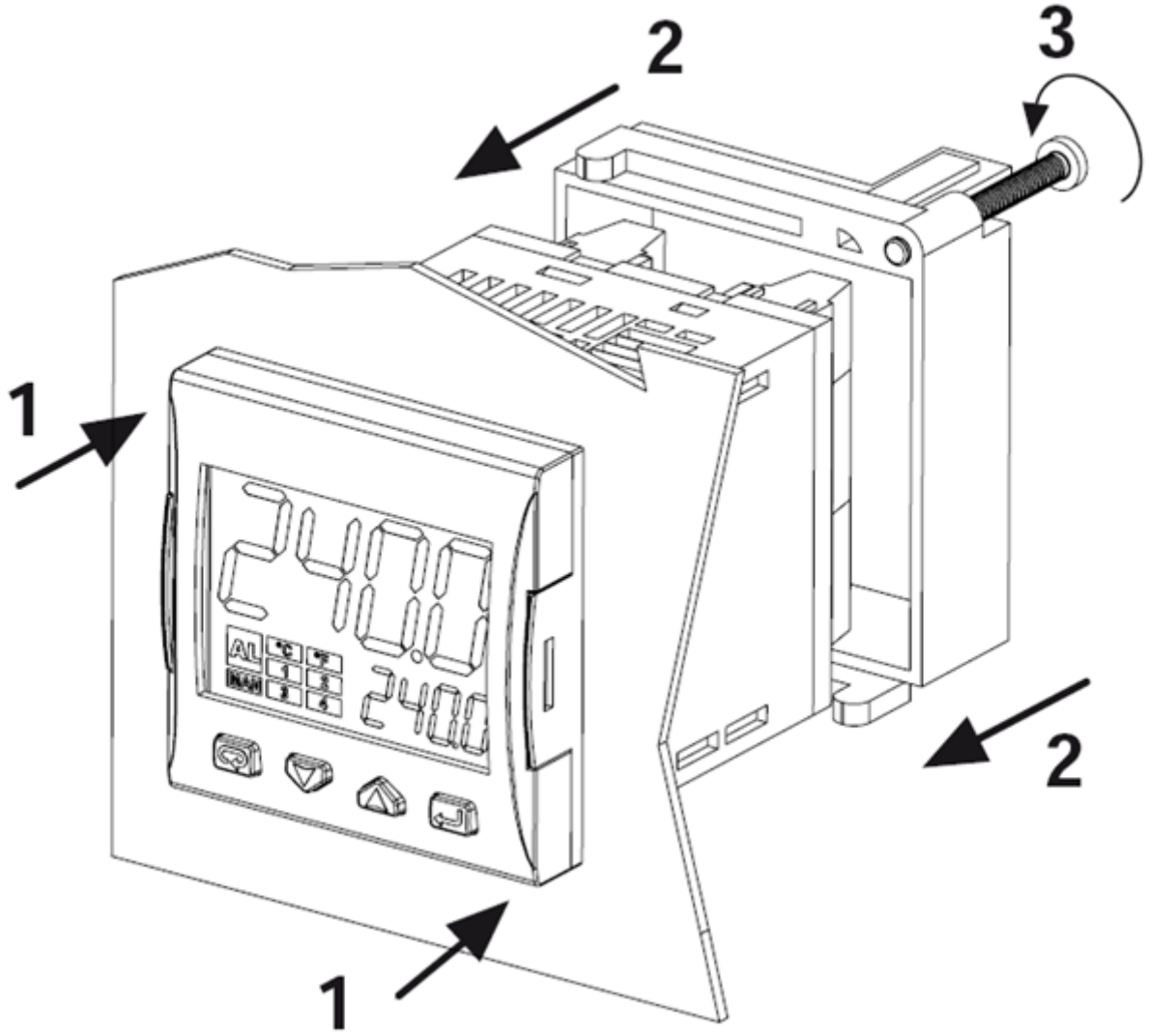

## DISPLAY AND KEYS

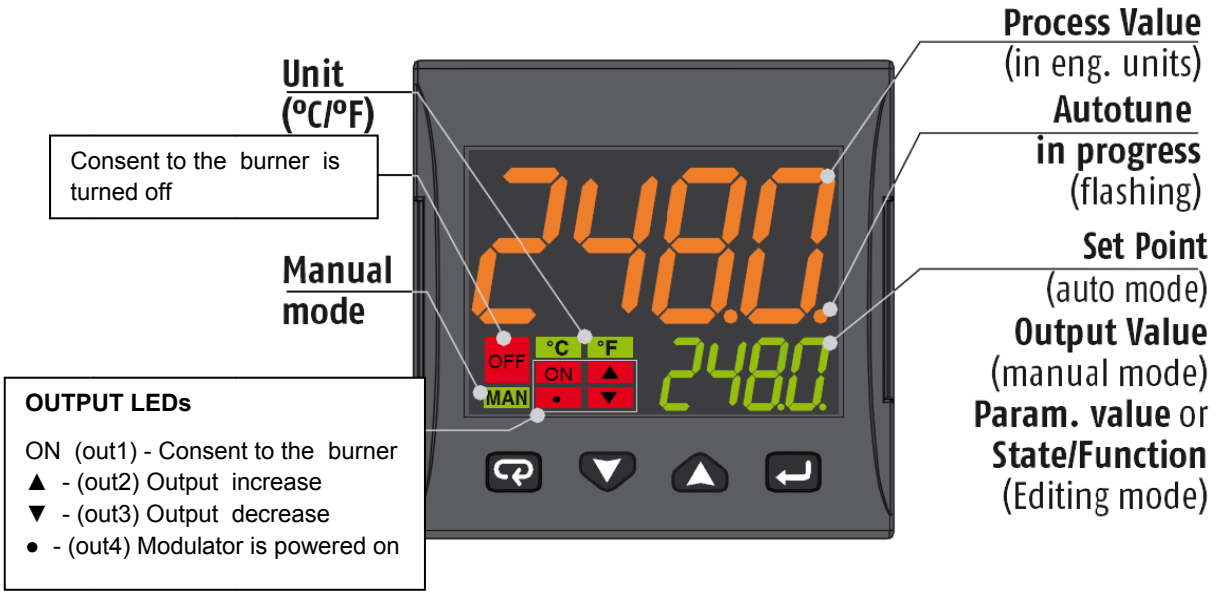


| | Operator Mode | Editing Mode |
|---|---|---|
| | Access to:<br>- Operator Commands<br>(Timer, Setpoint selection ...)<br>- Parameters<br>- Configuration | Confirm and go to<br>Next parameter |
| | Access to:<br>- Operator additional information<br>(Output value, running time ...) | Increase the displayed value or select the next element of the parameters list |
| | Access to:<br>- Set Point | Decrease the displayed value or select the previous element |
| | Programmable key:<br>Start the programmed function<br>(Autotune, Auto/Man, Timer ...) | Exit from Operator commands/Parameter setting/Configuration |

## CONNECTIONS DIAGRAM

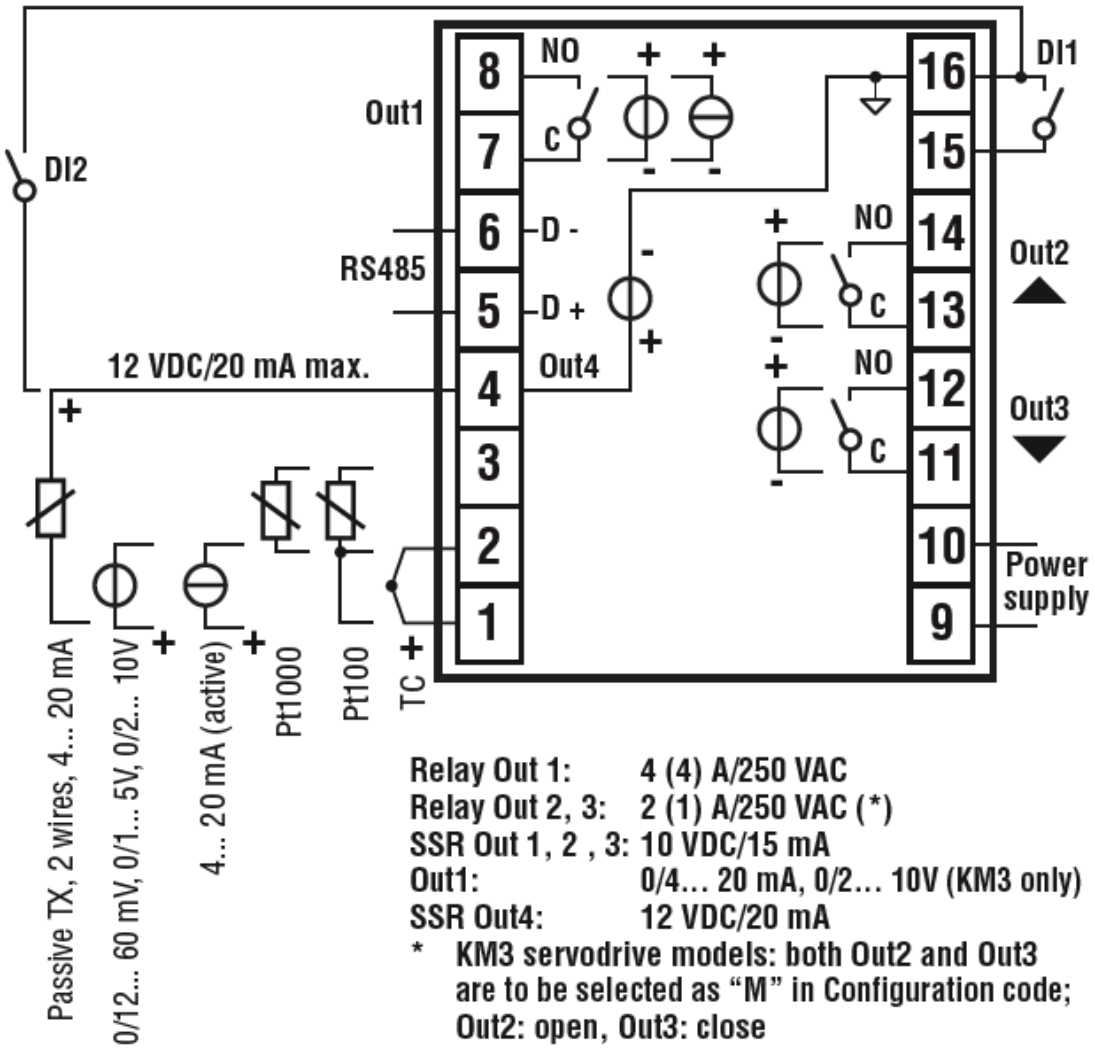


### *Probe connection:*

- **PT1000/NTC/PTC**: between terminal 3 and 2
- **PT 100**: between terminal 3 and 2 with terminal 1
- **Passive pressure probe** 0/4-20 mA: between terminal 4 ( + ) e 1 ( - )
  Note: out4 must be activated ( IO4F must be setted to ON )
- **Powered pressure probe** 0/4-20 mA between terminal 4 (power supply), 2 ( negative) e 1 (positive)
  Note: set IO4F to ON to activate Out4

### *Power supply connection:*

- **Neutral wire:** terminal 9
- **Phase:** terminal 10 ( 100…240 Vac )
- Close terminals 15-16 to switch to the set point 2

### *Output connection:*

- **Channel 1:** terminal 7 and 8 ( burner on – off )
- **Channel 2:** terminal 11 and 12 (servomotor opens)
- **Channel 3:** terminal 13 and 14 (servomotor closes)

## SETPOINT AND HYSTERESIS CONFIGURATION (SP, AL1, HAL1 parameters)

Push the ↵ button to enter into the setpoint configuration:

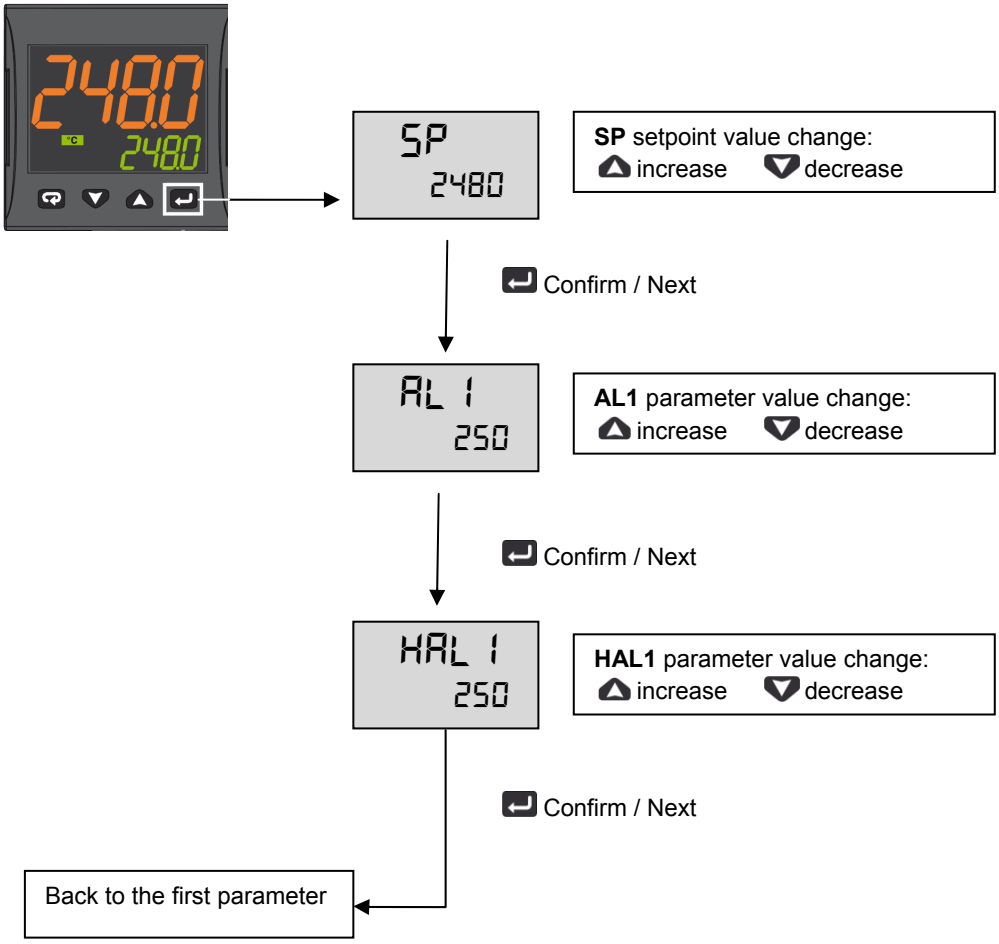


To return to normal mode, press the ↩ key for 3 seconds or wait the 10s timeout

### *Operation example*

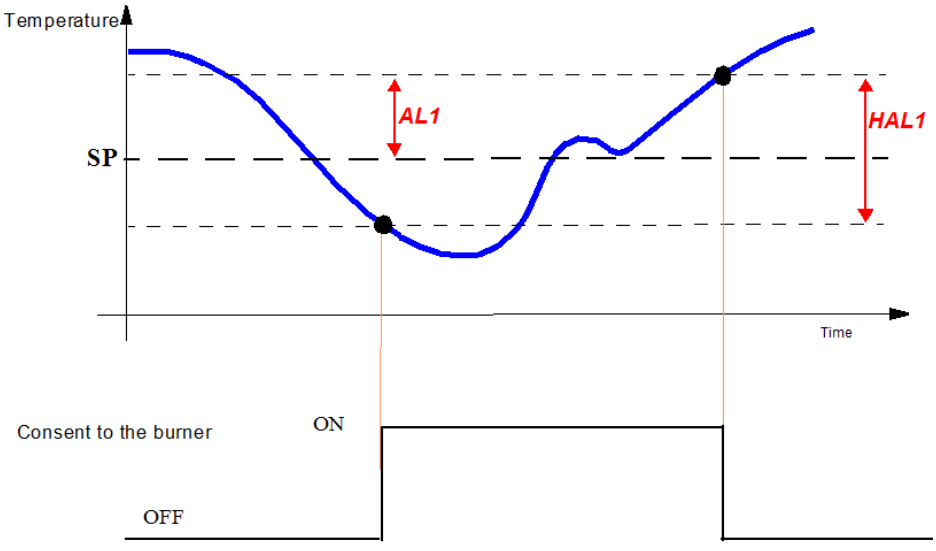

## LIMITED ACCESS LEVEL

Proceed as follows to change some parameters that are not visible in standard user mode:

Press the ↵ key for 3 seconds

Password = 20

Access to parameter:

| | |
|---|---|
| ▲ | Increase the displayed value |
| ▼ | Decrease the displayed value |
| ↵ | Confirm and go to next parameter |

| Param | Description | Values | Default |
|---|---|---|---|
| SEnS | Input type | Pt1 = RTD Pt100<br>Pt10 = RTD Pt1000<br>0.20 = 0..20mA<br>4.20 = 4..20mA Pressure probe<br>0.10 = 0..10V<br>2.10 = 2..10V<br>crAL= Thermocouple K | Depends on the probe |
| SP | Set point 1 | SPLL ... SPLH | See page 7 |
| AL1 | AL1 threshold | AL1L... AL1H (E.U.) | |
| HAL1 | AL1 hysteresis | 1... 9999 (E.U.) | |
| Pb | Proportional band | 1... 9999 (E.U.) | |
| ti | Integral time | 0 (oFF) ... 9999 (s) | |
| td | Derivative time | 0 (oFF) ... 9999 (s) | |
| Str.t | Servomotor stroke time | 5...1000 seconds | |
| db.S | Servomotor dead band | 0...100% | |
| SPLL | Minimum set point value | -1999 ... SPHL | |
| SPHL | Maximum set point value | SPLL ... 9999 | |
| dp | Decimal point position | 0... 3 | |
| SP 2 | Set point 2 | SPLL...SPLH | 60 |
| A.SP | Selection of the active set point | "SP" ... " nSP" | SP |

To exit the parameter setting procedure press the ↩ key (for 3 s) or wait until the timeout expiration (about 30 seconds)

## Probe parameters configuration MODULATORE ASCON KM3

| **Parameter Group** | **inP** | | | | | | **AL1** | | **rEG** | | | | | **SP** | | |
|---|---|---|---|---|---|---|---|---|---|---|---|---|---|---|---|---|
| **Parameter** | **Sens** | **dp** | **SSC** | **FSc** | **unit** | **IO4.F (**)** | **AL1 (***)** | **HAL1 (***)** | **Pb (***)** | **ti (***)** | **td (***)** | **Str.t** | **db.S** | **SPLL** | **SPHL** | **SP (***)** |
| Probes | | Dec Point | Scale Min | Scale Max | | | Off | On | p | i | d | servo time s | Band Mo. | SP Min | SP Max | Set point |
| Pt1000 (130°C max) | Pt10 | 1 | | | °C | on | 5 | 10 | 10 | 350 | 1 | * | 5 | 30 | 95 | 80 |
| Pt1000 ( 350°C max) | PT10 | 1 | | | °C | on | 10 | 10 | 10 | 350 | 1 | * | 5 | 0 | 350 | 80 |
| Pt100 (130°C max) | PT1 | 1 | | | °C | on | 5 | 10 | 10 | 350 | 1 | * | 5 | 0 | 95 | 80 |
| Pt100 (350°C max) | Pt1 | 1 | | | °C | on | 10 | 10 | 10 | 350 | 1 | * | 5 | 0 | 350 | 80 |
| Pt100 (0÷100°C 4÷20mA) | 4.20 | 1 | 0 | 100 | | on | 5 | 10 | 10 | 350 | 1 | * | 5 | 0 | 95 | 80 |
| Thermocouple K (1200°C max) | crAL | 0 | | | °C | on | 20 | 25 | 10 | 350 | 1 | * | 5 | 0 | 1200 | 80 |
| Thermocouple J (1000°C max) | J | 0 | | | °C | on | 20 | 25 | 10 | 350 | 1 | * | 5 | 0 | 1000 | 80 |
| 4-20mA / 0-1,6barPressure probe | 4.20 | 0 | 0 | 160 | | on | 20 | 20 | 5 | 120 | 1 | * | 5 | 0 | 160 | 100 |
| 4-20mA / 0-10bar Pressure probe | 4.20 | 0 | 0 | 1000 | | on | 50 | 50 | 5 | 120 | 1 | * | 5 | 0 | 1000 | 600 |
| 4-20mA / 0-16bar Pressure probe | 4.20 | 0 | 0 | 1600 | | on | 80 | 80 | 5 | 120 | 1 | * | 5 | 0 | 1600 | 600 |
| 4-20mA / 0-25bar Pressure probe | 4.20 | 0 | 0 | 2500 | | on | 125 | 125 | 5 | 120 | 1 | * | 5 | 0 | 2500 | 600 |
| 4-20mA / 0-40bar Pressure probe | 4.20 | 0 | 0 | 4000 | | on | 200 | 200 | 5 | 120 | 1 | * | 5 | 0 | 4000 | 600 |
| QBE2002 / 0-25bar Pressure probe | 0.10 | 0 | 0 | 2500 | | 0n | 125 | 125 | 5 | 120 | 1 | * | 5 | 0 | 2500 | 600 |

Note:

(*) Str.t - Servomotor stroke time
SQL33; STM30; SQM10; SQM40; SQM50; SQM54 = 30 (Seconds)
STA12B3.41; SQN30.251; SQN72.4A4A20 = 12 (Seconds)

**(**) Out 4 … on Display led °4 must be switched on, otherwise change the io4.F parameter value from "on" to "out4", confirm the value, quit the configuration mode then change again the io4.F parameter value from "out4" to "on".**

(***) Factory settings. These values must be adapted to machine conditions

N.B. For pressure probe, SP, SPHL, SPLL parameters values are expressed in Kpa (1 bar = 100 Kpa).

# CONFIGURATION

## *How to access configuration level*

The configuration parameters are collected in various groups. Every group defines all parameters related with a specific function (e.g.: control, alarms, output functions).

1. Push the button for more than 5 seconds. The upper display will show PASS while the lower display will show 0.
2. Using and buttons set the programmed password.
   According to the entered password, it is possible to see a part of the parameters listed in the "configuration parameters" section.
   a. Enter "**30**" as password to view all the configuration parameters
   b. Enter "**20**" as password to view the parameters of the "limited access level". At this point, only the parameters with attribute **Liv = A** or **Liv = O** will be editable.
   c. Leave the password blank to edit "user level" parameters, that are identified by attribute **Liv = O**
3. Push the button. If the password is correct the display will show the acronym of the first parameter group preceded by the symbol: . In other words the upper display will show: inP (group of the **Input parameters**).

The instrument is in configuration mode. To press for more than 5 seconds, the instrument will return to the "standard display.

**Keyboard functions during parameter changing:**

| | **Operator Mode** |
|---|---|
| | When the upper display is showing a group and the lower display is blank, this key allows to enter in the selected group. When the upper display is showing a parameter and the lower display is showing its value, this key allows to store the selected value for the current parameter and access the next parameter within the same group. |
| | Allows to increase the value of the selected parameter. |
| | Allows to decrease the value of the selected parameter. |
| | Short presses allow you to exit the current group of parameters and select a new group. A long press terminates the configuration procedure (the instrument returns to the normal display). |
| + | These two keys allow to return to the previous group. Proceed as follows:<br>Push the button and maintaining the pressure, then push the ; release both the buttons. |

## *Configuration Parameters*

| **inP GROUP - input confiuration** | | | | | |
|---|---|---|---|---|---|
| **Liv** | **N°** | **Param** | **Description** | **Values** | **Default** |
| A | 1 | SEnS | Input type | Pt1 = RTD Pt100<br>Pt10 = RTD Pt1000<br>0.20 = 0..20mA<br>4.20 = 4..20mA Pressure probe<br>0.10 = 0..10V<br>2.10 = 2..10V<br>crAL= Thermocouple K | Depends on the probe |
| A | 2 | dp | Decimal point position | 0... 3 | See page 7 |
| A | 3 | SSc | Initial scale read-out for linear inputs (avaiable only if SEnS parameter is not equal to Pt1, Pt10, crAL values) | -1999... 9999 | 0 |
| C | 4 | FSc | Full scale read-out for linear input inputs (avaiable only if SEnS parameter is not equal to Pt1, Pt10, crAL values) | -1999... 9999 | Depends on the probe |
| C | 5 | unit | Unit of measure<br>(present only in the case of temperature probe) | °C/°F | °C |
| C | 6 | Fil | Digital filter on the measured value | 0 (= OFF)... 20.0 s | 1.0 |
| C | 7 | inE | Selection of the Sensor Out of Range type that will enable the safety output value | or = Over range<br>ou = Under range<br>our = over e under range | or |

| | | | | | |
|---|---|---|---|---|---|
| C | 8 | oPE | Safety output value | -100... 100 | 0 |
| C | 9 | io4.F | I/O4 function selection | on = Out4 will be ever ON (used as a transmitter power supply) ,out4 = Uscita 4 (Used as digital output 4), dG2c = Digital input 2 for contact closure, dG2U = Digital input 2 driven by 12... 24 VDC | on |
| C | 10 | diF1 | Digital input 1 function | oFF = Not used,<br>1 = Alarm reset,<br>2 = Alarm acknowledge (ACK),<br>3 = Hold of the measured value,<br>4 = Stand by mode,<br>5 = Manual mode,<br>6 = HEAt with SP1 and CooL with SP2,<br>7 = Timer RUN/Hold/Reset,<br>8 = Timer Run,<br>9 = Timer Reset,<br>10 = Timer Run/Hold,<br>11 = Timer Run/Reset,<br>12 = Timer Run/Reset with lock,<br>13 = Program Start,<br>14 = Program Reset,<br>15 = Program Hold,<br>16 = Program Run/Hold,<br>17 = Program Run/Reset,<br>18 = Sequential SP selection,<br>19 = SP1 - SP2 selection,<br>20 = SP1... SP4 binary selection,<br>21 = Digital inputs in parallel | 19 |
| C | 12 | di.A | Digital Inputs Action<br>(DI2 only if configured) | 0 = DI1 direct action, DI2 direct action<br>1 = DI1 reverse action, DI2 direct action<br>2 = DI1 direct action, DI2 reverse action<br>3 = DI1 reverse action, DI2 reverse action | 0 |

| **Out GROUP- Output parameters** | | | | | |
|---|---|---|---|---|---|
| **Liv** | **N°** | **Param** | **Description** | **Values** | **Default** |
| C | 14 | o1F | Out 1 function | AL = Alarm output | AL |
| C | 15 | o1AL | Initial scale value of the analog retransmission | -1999 ... Ao1H | 1 |
| C | 18 | o1Ac | Out 1 action | dir = Direct action<br>rEU = Reverse action<br>dir.r = Direct with reversed LED<br>ReU.r = Reverse with reversed LED | rEUr.r |
| C | 19 | o2F | Out 2 function | H.rEG = Heating output | H.rEG |
| C | 21 | o2Ac | Out 2 action | dir = Direct action<br>rEU = Reverse action<br>dir.r = Direct with reversed LED<br>ReU.r = Reverse with reversed LED | dir |
| C | 22 | o3F | Out 3 function | H.rEG = Heating output | H.rEG |
| C | 24 | o3Ac | Out 3 action | dir = Direct action<br>rEU = Reverse action<br>dir.r = Direct with reversed LED<br>ReU.r = Reverse with reversed LED | dir |

| **AL1 GROUP - Alarm 1 parameters** | | | | | |
|---|---|---|---|---|---|
| **Liv** | **N°** | **Param** | **Descrizione** | **Values** | **Default** |
| C | 28 | AL1t | Tipo allarme AL1 | nonE = Alarm not used<br>LoAb = Absolute low alarm<br>HiAb = Absolute high alarm<br>LHAo = Windows alarm in alarm outside the windows<br>LHAI = Windows alarm in alarm inside the | HidE |

| | | | | | |
|---|---|---|---|---|---|
| | | | | windows<br>SE.br = Sensor Break<br>LodE = Deviation low alarm (relative)<br>HidE = Deviation high alarm (relative)<br>LHdo = Relative band alarm in alarm out of the band<br>LHdi = Relative band alarm in alarm inside the band | |
| C | 29 | Ab1 | Alarm 1 function | 0... 15<br>+1 = Not active at power up<br>+2 = Latched alarm (manual reset)<br>+4 = Acknowledgeable alarm<br>+8 = Relative alarm not active at set point change | 0 |
| C | 30 | AL1L | -- For High and low alarms, it is the low limit of the AL1 threshold;<br>-- For band alarm, it is low alarm threshold | -1999... AL1H (E.U.) | -199.9 |
| C | 31 | AL1H | -- For High and low alarms, it is the high limit of the AL1 threshold;<br>-- For band alarm, it is high alarm threshold | AL1L... 9999 (E.U.) | 999.9 |
| O | 32 | AL1 | AL1 threshold | AL1L... AL1H (E.U.) | See page 7 |
| O | 33 | HAL1 | AL1 hysteresis | 1... 9999 (E.U.) | See page 7 |
| C | 34 | AL1d | AL1 delay | 0 (oFF)... 9999 (s) | oFF |
| C | 35 | AL1o | Alarm 1 enabling during Stand-by mode and out of range conditions | 0 = Alarm 1 disabled during Stand by and out of range<br>1 = Alarm 1 enabled in stand by mode<br>2 = Alarm 1 enabled in out of range condition<br>3 = Alarm 1 enabled in stand by mode and in overrange<br>condition | 1 |

| **GRUPPO AL2 - parametri allarme 2** | | | | | |
|---|---|---|---|---|---|
| **Liv** | **N°** | **Param** | **Description** | **Values** | **Default** |
| C | 36 | AL2t | Alarm 2 type | nonE = Alarm not used<br>LoAb = Absolute low alarm<br>HiAb = Absolute high alarm<br>LHAo = Windows alarm in alarm outside the windows<br>LHAI = Windows alarm in alarm inside the windows<br>SE.br = Sensor Break<br>LodE = Deviation low alarm (relative)<br>HidE = Deviation high alarm (relative)<br>LHdo = Relative band alarm in alarm out of the band<br>LHdi = Relative band alarm in alarm inside the band | SE.br |
| C | 37 | Ab2 | Alarm 2 function | 0... 15<br>+1 = Not active at power up<br>+2 = Latched alarm (manual reset)<br>+4 = Acknowledgeable alarm<br>+8 = Relative alarm not active at set point change | 0 |
| C | 42 | AL2d | AL2 hysteresis | 0 (oFF)... 9999 (s) | oFF |
| C | 43 | AL2o | Alarm 2 enabling during Stand-by mode and out of range conditions | 0 = Alarm 2 disabled during Stand by and out of range<br>1 = Alarm 2 enabled in stand by mode<br>2 = Alarm 2 enabled in out of range condition<br>3 = Alarm 2 enabled in stand by mode and in overrange<br>condition | 0 |

| AL3 Group - alarm 3 parameters | | | | | |
|---|---|---|---|---|---|
| **Liv** | **N°** | **Param** | **Description** | **Values** | **Default** |
| | 44 | AL3t | Alarm 3 type | nonE = Alarm not used<br>LoAb = Absolute low alarm<br>HiAb = Absolute high alarm<br>LHAo = Windows alarm in alarm outside the windows<br>LHAI = Windows alarm in alarm inside the windows<br>SE.br = Sensor Break<br>LodE = Deviation low alarm (relative)<br>HidE = Deviation high alarm (relative)<br>LHdo = Relative band alarm in alarm out of the band<br>LHdi = Relative band alarm in alarm inside the band | nonE |

| LbA Group - Loop break alarm | | | | | |
|---|---|---|---|---|---|
| **Liv** | **N°** | **Param** | **Descrizione** | **Values** | **Default** |
| C | 52 | LbAt | LBA time | Da 0 (oFF) a 9999 (s) | oFF |

| rEG Group - Control parameters | | | | | |
|---|---|---|---|---|---|
| **Liv** | **N°** | **Param** | **Description** | **Values** | **Default** |
| C | 56 | cont | Control type | Pid = PID (heat and/or)<br>On.FA = ON/OFF asymmetric hysteresis<br>On.FS = ON/OFF symmetric hysteresis<br>nr = Heat/Cool ON/OFF control with neutral zone<br>3Pt = Servomotor control (available only when Output 2 and<br>Output 3 have been ordered as “M”) | 3pt |
| C | 57 | Auto | Autotuning selection | -4 = Oscillating auto-tune with automaticrestart at power up and after all point change<br>-3 = Oscillating auto-tune with manual start<br>-2 = Oscillating -tune with auto-matic start at the first power up only<br>-1 = Oscillating auto-tune with auto-matic restart at every power up<br>0 = Not used<br>1 = Fast auto tuning with automatic restart at every power up<br>2 = Fast auto-tune with automatic start the first power up only<br>3 = FAST auto-tune with manual start<br>4 = FAST auto-tune with automatic restart at power up and<br>after set point change<br>5 = Evo-tune with automatic restart at every power up<br>6 = Evo-tune with automatic start the first power up only<br>7 = Evo-tune with manual start<br>8 = Evo-tune with automatic restart at power up and after a set point change | 7 |
| C | 58 | tunE | Manual start of the Autotuning | oFF = Not active<br>on = Active | oFF |

| | | | | | |
|---|---|---|---|---|---|
| C | 59 | SELF | Self tuning enabling | no = The instrument does not perform the self-tuning<br>YES = The instrument is performing the self-tuning | No |
| A | 62 | Pb | Proportional band | 1... 9999 (E.U.) | See page 7 |
| A | 63 | ti | Integral time | 0 (oFF) ... 9999 (s) | See page 7 |
| A | 64 | td | Derivative time | 0 (oFF) ... 9999 (s) | See page 7 |
| C | 65 | Fuoc | Fuzzy overshoot control | 0.00... 2.00 | 1 |
| C | 69 | rS | Manual reset (Integral pre-load) | -100.0... +100.0 (%) | 0.0 |
| A | 70 | Str.t | Servomotor stroke time | 5...1000 seconds | See page 7 |
| A | 71 | db.S | Servomotor dead band | 0...100% | 5 |
| C | 72 | od | Delay at power up | 0.00 (oFF) ... 99.59 (hh.mm) | oFF |

**SP Group - Set point parameters**

| Liv | N° | Param | Description | Values | Default |
|---|---|---|---|---|---|
| C | 76 | nSP | Number of used set points | 1... 4 | 2 |
| A | 77 | SPLL | Minimum set point value | -1999 ... SPHL | See page 7 |
| A | 78 | SPHL | Maximum set point value | SPLL ... 9999 | See page 7 |
| O | 79 | SP | Set point 1 | SPLL ... SPLH | See page 7 |
| C | 80 | SP 2 | Set point 2 | SPLL ... SPLH | 60 |
| | 83 | A.SP | Selection of the active set point | "SP" ... " nSP" | SP |
| C | 84 | SP.rt | Remote set point type | RSP = The value coming from serial link is used as remote set point<br>trin = The value will be added to the local set point selected by<br>A.SP and the sum becomes the operative set point<br>PErc = The value will be scaled on the input range and this value will be used as remote SP | trin |
| C | 85 | SPLr | Local/remote set point selection | Loc = Local<br>rEn = Remote | Loc |
| C | 86 | SP.u | Rate of rise for POSITIVE set point change (ramp UP) | 0.01... 99.99 (inF) Eng. units per minute | inF |
| C | 87 | SP.d | Rate of rise for NEGATIVE set point change (ramp DOWN) | 0.01... 99.99 (inF) Eng. units per minute | inF |

**PAn Group - Operator HMI**

| Liv | N° | Param | Description | Values | Default |
|---|---|---|---|---|---|
| C | 118 | PAS2 | Level 2 password (limited access level) | oFF (Level 2 not protected by password)<br>1... 200 | 20 |
| C | 119 | PAS3 | Level 3 password (complete configuration level) | 3... 300 | 30 |
| C | 120 | PAS4 | Password livello (livello configurazione a codice) | 201... 400 | 300 |
| C | 121 | uSrb | button function during RUN TIME | nonE = No function<br>tunE = Auto-tune/self-tune enabling. A single press (longer than 1 second)<br>starts the auto-tune<br>oPLo = Manual mode. The first pressure puts the instrument in manual mode<br>(OPLO) while a second one puts the instrument in Auto mode | tunE |

| | | | | | |
|---|---|---|---|---|---|
| | | | | AAc = Alarm reset<br>ASi = Alarm acknowledge<br>chSP = Sequential set point selection<br>St.by = Stand by mode. The first press puts the instrument in stand by<br>mode while a second one puts the instrument in Auto mode.<br>Str.t = Timer run/hold/reset<br>P.run = Program run<br>P.rES = Program reset<br>P.r.H.r = Program run/hold/reset | |
| C | 122 | diSP | Display management | Spo = Operative set point | SPo |
| C | 123 | di.cL | Display colour | 0 = The display colour is used to show the actual deviation (PV - SP)<br>1 = Display red (fix)<br>2 = Display green (fix)<br>3 = Display orange (fix) | 2 |
| | 125 | diS.t | Display Timeout | -- oFF (display always ON)<br>-- 0.1... 99.59 (mm.ss) | oFF |
| C | 126 | fiLd | Filter on the displayed value | -- oFF (filter disabled)<br>-- From 0.0 (oFF) to 20.0 (E.U.) | oFF |
| C | 128 | dSPu | Instrument status at power ON | AS.Pr = Starts in the same way it was prior to the power down<br>Auto = Starts in Auto mode<br>oP.0 = Starts in manual mode with a power output equal to zero<br>St.bY = Starts in stand-by mode | Auto |
| C | 129 | oPr.E | Operative modes enabling | ALL = All modes will be selectable by the next parameter<br>Au.oP = Auto and manual (OPLO) mode only will be selectable by the next parameter<br>Au.Sb = Auto and Stand-by modes only will be selectable by the next parameter | ALL |
| C | 130 | oPEr | Operative mode selection | If oPr.E = ALL: - Auto = Auto mode<br>- oPLo = Manual mode<br>- St.bY = Stand by mode<br>If oPr.E = Au.oP: - Auto = Auto mode<br>- oPLo = Manual mode<br>If oPr.E = Au.Sb: - Auto = Auto mode<br>- St.bY = Stand by mode | Auto |

| **SEr Group - Serial link parameter** | | | | | |
|---|---|---|---|---|---|
| **Liv** | **N°** | **Param** | **Description** | **Values** | **Default** |
| C | 131 | Add | Instrument address | -- oFF<br>-- 1... 254 | 1 |
| C | 132 | bAud | baud rate | 1200 = 1200 baud<br>2400 = 2400 baud<br>9600 = 9600 baud<br>19.2 = 19200 baud<br>38.4 = 38400 baud | 9600 |
| C | 133 | trSP | Selection of the value to be retransmitted (Master) | nonE = Retransmission not used (the instrument is a slave)<br>rSP = The instrument becomes a Master and retransmits the operative set point<br>PErc = The instrument become a Master and it retransmits the power output | nonE |

| con Group - Consumption parameters | | | | | |
|---|---|---|---|---|---|
| **Liv** | **N°** | **Param** | **Description** | **Values** | **Default** |
| C | 134 | Co.tY | Count type | oFF = Not used<br>1 = Instantaneous power (kW)<br>2 = Power consumption (kW/h)<br>3 = Energy used during program execution. This measure starts from<br>zero when a program runs end stops at the end of the program. A<br>new program execution will reset the value<br>4 = Total worked days: number of hours the instrument is turned ON<br>divided by 24.<br>5 = Total worked hours: number of hours the instrument is turned ON.<br>6 = Total worked days with threshold: number of hours the instrument is<br>turned ON divided by 24, the controller is forced in stand-by when<br>Co.ty value reaches the threshold set in [137] h.Job.<br>7 = Total worked hours with threshold: number of hours the instrument<br>is turned ON, the controller is forced in stand-by when Co.ty value<br>reaches the threshold set in [137] h.Job.<br>8 = Totalizer of control relay worked days: number of hours the control<br>relay has been in ON condition, divided by 24.<br>9 = Totalizer of control relay worked hours: number of hours the control<br>relay has been in ON condition.<br>10 = Totalizer of control relay worked days with threshold: number of<br>hours the control relay has been in ON condition divided by 24,<br>the controller is forced in stand-by when Co.ty value reaches the<br>threshold set in [137] h.Job.<br>11 = Totalizer of control relay worked hours with threshold: number of<br>hours the control relay has been in ON condition, the controller is<br>forced in stand-by when Co.ty value reaches the threshold set in<br>[137] h.Job. | oFF |
| C | 138 | t.Job | Worked time (not resettable) | 0... 9999 days | 0 |

| cAL Group - User calibration group | | | | | |
|---|---|---|---|---|---|
| **Liv** | **N°** | **Param** | **Description** | **Values** | **Default** |
| C | 139 | AL.P | Adjust Low Point | From -1999 to (AH.P - 10) in engineering units | 0 |
| C | 140 | AL.o | Adjust Low Offset | -300... +300 (E.U.) | 0 |
| C | 141 | AH.P | Adjust High Point | From (AL.P + 10) to 9999 engineering units | 999.9 |
| C | 142 | AH.o | Adjust High Offset | -300... +300 | 0 |

# OPERATIVE MODES

When the instrument is powered, it starts immediately to work according to the parameters values loaded in its memory. The instrument behaviour and its performance are governed by the value of the stored parameters.

At power ON the instrument can start in one of the following mode depending on its configuration:

**Automatic Mode** In Automatic mode the instrument drives automatically the control output according to the parameter value set and the set point/measured value.

**Manual Mode** (OPLO): In Manual mode the the upper display shows the measured value while the lower display shows the power output The lower display shows the power output [preceded by H (for heating) or C (for cooling)], MAN is lit and the instrument allows you to set manually the control output power. No Automatic action will be made.

**Stand by Mode** (St.bY): In stand-by mode the instrument operates as an indicator. It will show on the upper display the measured value and on the lower display the set point alternately to the “St.bY” messages and forces the control outputs to zero.

We define all the above described conditions as “Standard Display”.

As we have seen, it is always possible to modify the value assigned to a parameter independently from the operative modes selected.

## *AUTOMATIC MODE*

Keyboard function when the instrument is in Auto mode:

| | **Modo Operatore** |
|---|---|
| | Allows entry into parameter modification procedures |
| | Allows you to start the “Direct set point modification” function (see below). |
| | Allows you to display the “additional informations” (see below). |
| | Performs the action programmed by [121] uSrb ( button function during RUN TIME) parameter |

**Additional information**
This instrument is able to show you some additional informations that can help you to manage your system.
The additional informations are related to how the instrument is programmed, hence in many cases, only part of this information is available.

1. When the instrument is showing the “standard display” push button. The lower display will show H or c followed by a number. This value is the current power output applied to the process. The H show you that the action is a Heating action while the "c" show you that the action is a Cooling action
2. Push button again. When the programmer is running the lower display will show the segment currently performed and the Event status as shown below:
   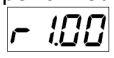 where the first character can be r for a ramp or S for a soak, the next digit show the number of the segment (e.g. S3 means Soak number 3) and the twoless significant digits (LSD) show you the status of the two event (the LSD is the Event 2)..
3. Push button again. When the programmer is running the lower display will show the theoretical remaining time to the end of the program preceded by a "P" letter:
   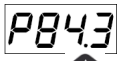
4. Push button again. When the wattmeter function is running the lower display will show U followed by the measured energy..
5. Push button. When the “Worked time count” is running the lower display will show "d" for days or "h" for hours followed by the measured time.
6. Push button. The instrument returns to the "standard display".

Note: The additional information visualization is subject to a time out. If no button is pressed for more than 10 second the instrument comes automatically back to the Standard display..

**Direct set point modification**
This function allows to modify rapidly the set point value selected by [83] A.SP (selection of the active Set point) or to the set point of the segment group (of the programmer) currently in progress.

1. Push button. The upper display shows the acronym of the selected set point (e.g. SP2) and the lower display will show its value.
2. By and buttons, assign to this parameter the desired value
3. Do not push any button for more than 5 second or push the button. In both cases the instrument memorize the new value and come back to the “standard display”.

## *Manual mode*

This operative mode allows you to deactivate automatic control and manually program the percentage power output to the process. When the instrument is in manual mode, the upper display shows the measured value while the lower display shows the power output [preceded by H (for heating action) or C (for cooling action)] The MAN LED is lit. When manual control is selected, the instrument will start to operate with the same power output as the last one supplied by automatic mode and can be modified using the and buttons.

In case of ON/OFF control, 0% corresponds to the deactivated output while any value different from 0 corresponds to the activated output. As in the case of visualization, the programmable values range from H100 (100% output power with reverse action) to C100 (100% output power with direct action).

**Notes**:

- During manual mode, the alarms are operative.
- If you set manual modes during program execution, the program will be frozen and it will restart when the instrument will come back to Auto mode.
- If you set manual modes during self-tune execution, the self- tune function will be aborted.
- During manual mode, all functions not related with the control (wattmeter, independent timer, “worked time”, etc) continue to operate normally..

## *STAND-BY MODE*

This operative mode also deactivates the automatic control but forces the control output to zero. In this mode the instrument operates as an indicator. When the instrument is in stand by mode the upper display will show the measured value while the lower display will show alternately the set point and the message “St.bY”.

Notes:

- During stand by mode, the relative alarms are disabled while the absolute alarms are operative or not according to the ALxo (Alarm x enabling during Stand-by mode) parameter setting.
- If you set stand by mode during program execution, the program will be aborted.
- If you set stand by mode during self-tune execution, the self- tune function will be aborted.
- During stand by mode, all functions not related with the control (wattmeter, independent timer, “worked time”, etc) continue to operate normally.
- When the instrument is swapped from stand by to auto modes, the instrument will start automatically the alarm masking, the soft start functions and the auto-tune (if programmed).

## *AUTOTUNE (EVOTUNE)*

Evotune is a fast and fully automatic procedure that can be started in any condition, regardless the deviation from SP. The controller selects automatically the best tune method and computes the optimum PID parameters. To activate Evotune press button for 3 seconds.

## ERROR MESSAGES

The upper display shows the OVER-RANGE and UNDERRANGE conditions with the following indications:

Over-range:

Under-range

The sensor break will be signalled as an out of range: 

Note: When an over-range or an under-range is detected, the alarms operate as in presence of the maximum or the minimum measurable value respectively.

To check the out of span Error condition, proceed as follows:

1. Check the input signal source and the connecting line.
2. Make sure that the input signal is in accordance with the instrument configuration. Otherwise, modify the input configuration.
3. If no error is detected, send the instrument to your supplier to be checked.

### *List of possible errors*

**ErAT** Fast Auto-tune cannot start. The measure value is tooclose to the set point. Push the button in order to delete the error message.

**ouLd** Overload on the out 4. The messages shows that a short circuit is present on the Out 4 when it is used as output or as a transmitter power suply. When the short circuit disappears the output restart to operate..

**NoAt** Auto-tune not finished within 12 hours.

**ErEP** Possible problem of the instrument memory. The messages disappears automatically. When the error continues, send the instrument to your supplier.

**RonE** Possible problem of the firmware memory. When this error is detected, send the instrument to your supplier.

**Errt** Possible problem of the calibration memory. When this error is detected, send the instrument to your supplier.

## FACTORY RESET

Sometime, e.g. when you re-configure an instrument previously used for other works or from other people or when you have made too many errors during configuration and you decided to re-configure the instrument, it is possible to restore the factory configuration. This action allows to put the instrument in a defined condition (the same it was at the first power ON).

The default data are those typical values loaded in the instrument prior to ship it from factory. To load the factory default parameter set, proceed as follows:

1. Press the ↵ button for more than 5 seconds. The upper display will show PASS while the lower display shows 0;
2. Using ▲ and ▼ buttons set the value -481;
3. Push ↵ button;
4. The instrument will turn OFF all LEDs for a few seconds, then the upper display will show dFLt (default) and then all LEDs are turned ON for 2 seconds. At this point the instrument restarts as for a new power ON.

The procedure is complete.

Note: The complete list of the default parameters is available in Chapter "Configuration".

# RWF55.5X & RWF55.6X

***User manual***

M12926CA Rel.0.2 11/2023

## DEVICE INSTALLATION

***Fixing system***

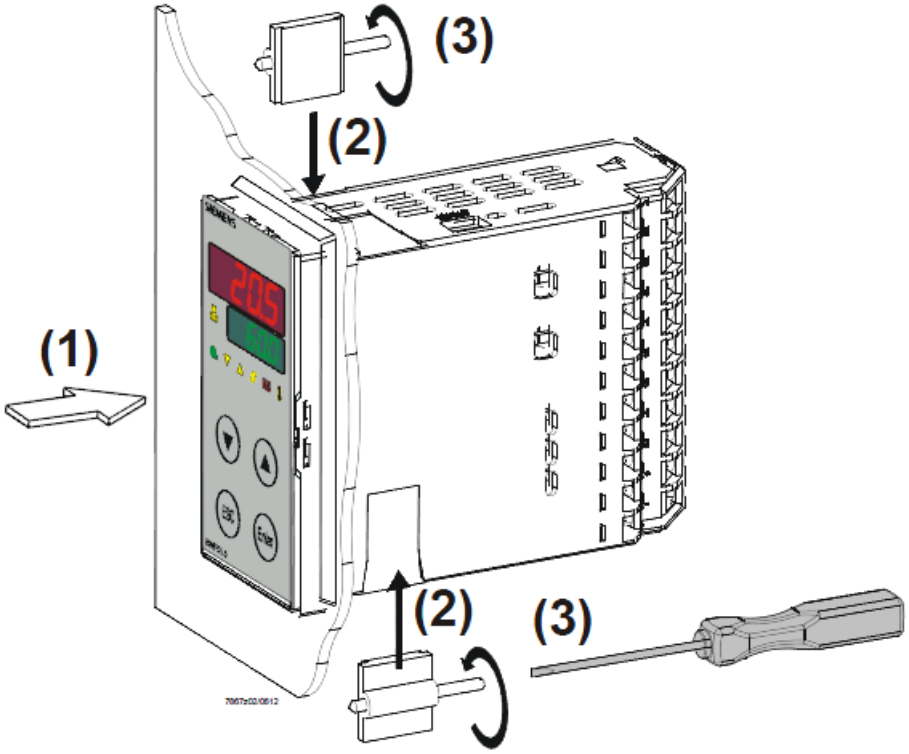


***Drilling dimensions:***

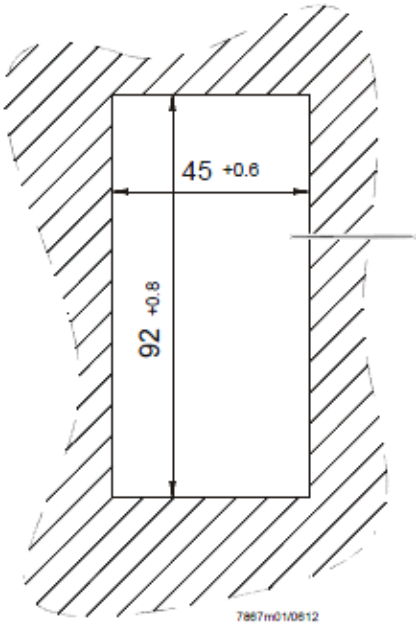

## FRONT PANEL

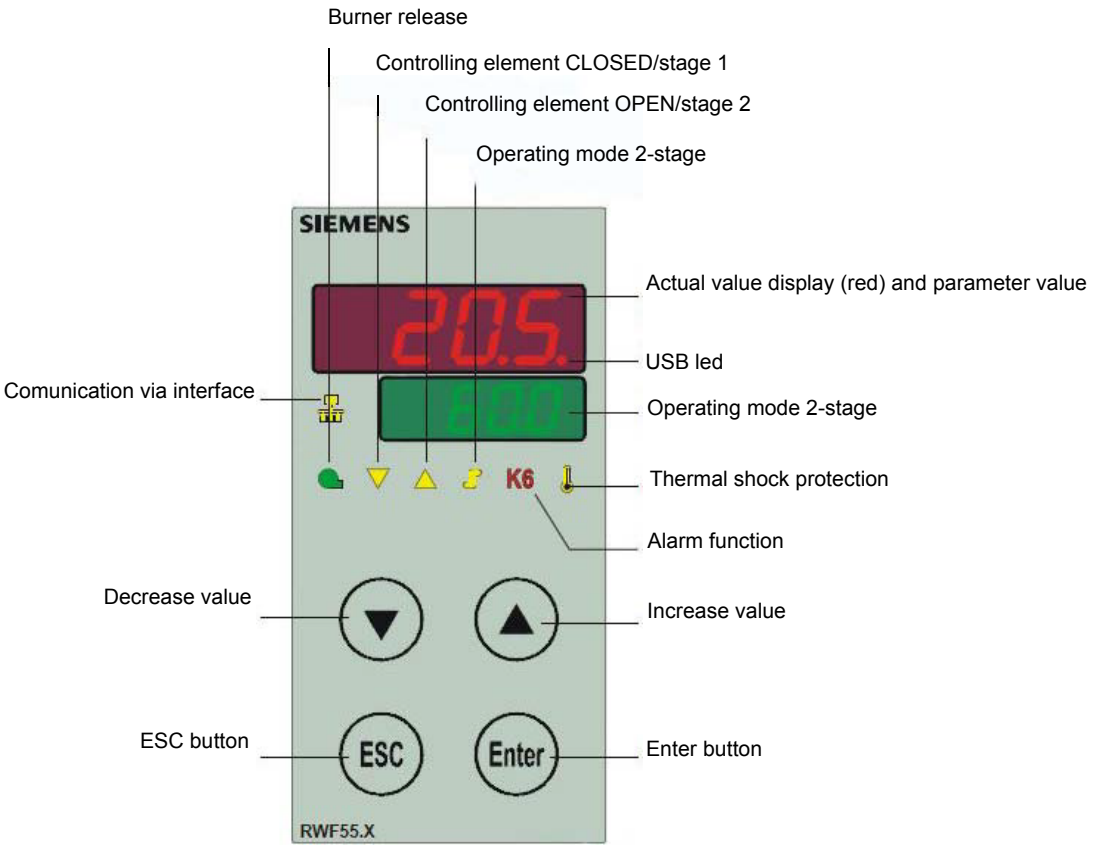
Burner release
Controlling element CLOSED/stage 1
Controlling element OPEN/stage 2
Operating mode 2-stage
SIEMENS
Actual value display (red) and parameter value
USB led
Comunication via interface
Operating mode 2-stage
K6
Thermal shock protection
Alarm function
Decrease value
Increase value
ESC button
ESC
Enter
Enter button
RWF55.X

## NAVIGATION MENU

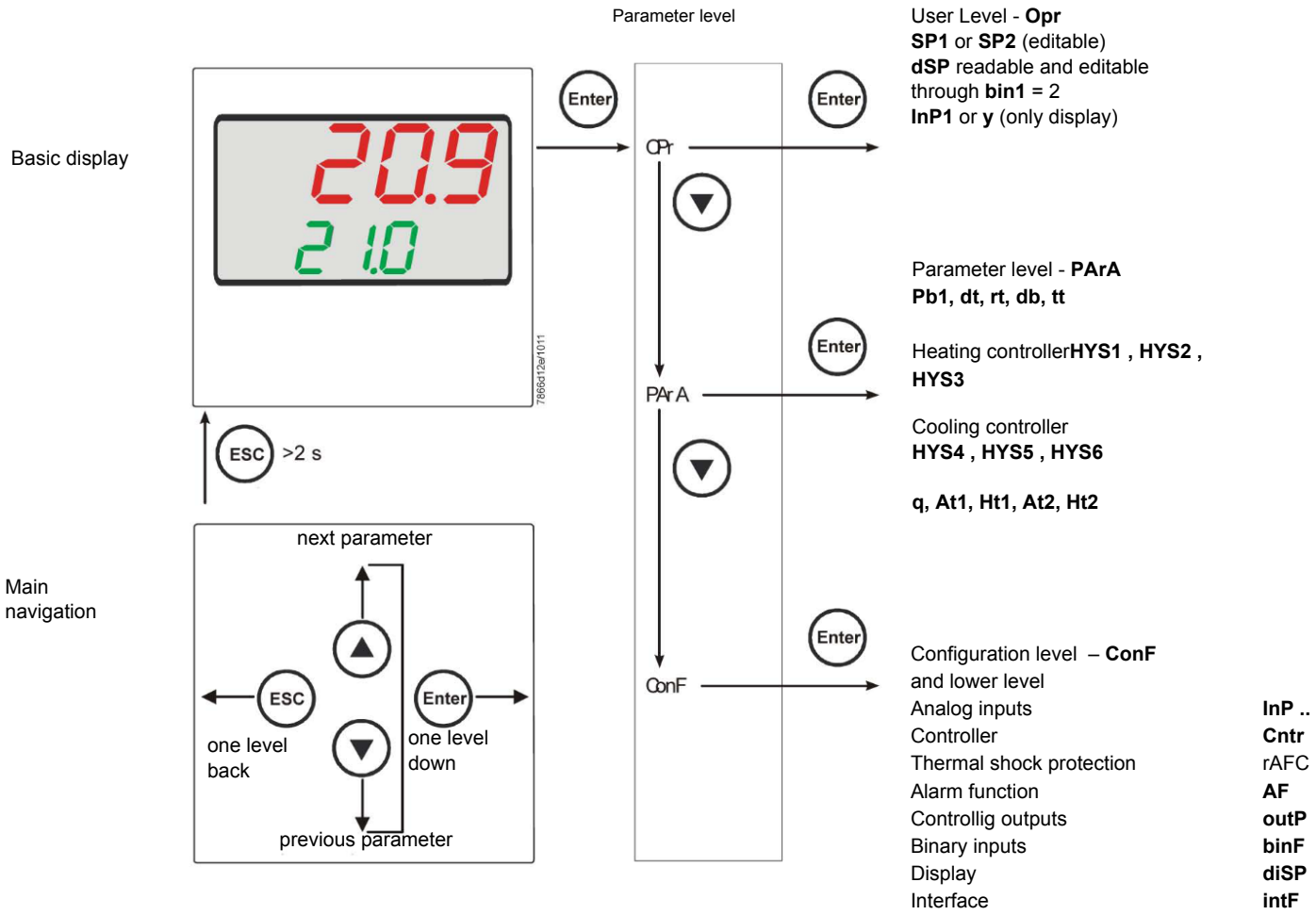


RWF55 is preset good for 90% of applications. However, you can set or edit parameters as follow:

### *Set-point: set or modification:*

When the burner is in stand-by, (safety loop open, that is terminals 3-4/T1-T2 on the 7 pole plug open) push the Enter button: on the lower display (green) Opr appears; push Enter again and in the same display SP1 appears. Push Enter again and the lower display (green SP1) flashes. Using the up and down arrows change the set-point on the upper display (red).Push Enter to confirm and push ESC more times to get the home position.

### *PID parameters set and modifications (PArA):*

Push **Enter** button, on the green display **Opr** appears; using the **down arrow,** scroll until group **PArA** is reached and push **Enter**.
On the green display **Pb1** e appears and on the red one the set parameter. Push is sequence the **down or up** arrow the menu is scrolled.
Push **Enter** to select and the **arrows** to choose the desired value. **Enter** to confirm

| Parameter | Display | Range | Factory setting | Remarks |
|---|---|---|---|---|
| Proportional band | Pb1 | 1… 9999 digit | 10 | Typical value for temperature |
| erivative action | dt | 0… 9999 sec. | 80 | Typical value for temperature |
| Integral action | rt | 0… 9999 sec. | 350 | Typical value for temperatureT |
| Dead band (*) | db | 0… 999,9 digit | 1 | Typical value |
| Servocontrol running time | tt | 10… 3000 sec. | 15 | Set servocontrol running time |
| Switch-on differential (*) | HYS1 | 0,0… -1999 digit | -5 | Value under setpoint below which the burner switches back on (1N-1P closes) |
| Switch-off differential 2° stage (*) | HYS2 | 0,0 … HYS3 | 3 | (enable only with parameter bin1 = 4) |
| Upper switch-off differential (*) | HYS3 | 0,0… 9999 digit | 5 | Value over setpoint above which the burner switches off (1N-1P opens) |
| Switch-on differential on cooling controller (*) | HYS4 | 0,0… 9999 digit | 5 | Do not used (enable only with parameter **CACt** = 0) |
| Switch-off differential 2° stage on cooling controller (*) | HYS5 | HYS6…0,0 digit | 5 | Do not used (enable only with parameter **CACt** = 0 and parameter **bin1**=0) |
| Upper switch-off differential on cooling controller (*) | HYS6 | 0,0… -1999 digit | 5 | Do not used (enable only with parameter CACt = 0) |
| Delay modulation | q | 0,0… 999,9 digit | 0 | Do not alter |
| T Outside temperature Curve point 1 (*) | At1 | -40 ...120 digit | -10 | First point of external temperature for climatic curve |
| Boiler temperature Curve point 1 (*) | Ht1 | SPL...SPH | 60 | Set-point temperature for the external temperature 1 |
| TT Outside temperature Curve point 2 (*) | At2 | -40 ...120 digit | 20 | Second point of external temperature for climatic curve |
| Boiler temperature Curve point 2 (*) | Ht2 | SPL...SPH | 50 | Set-point temperature for the external temperature 2 |

(*) Parameters affected by setting of decimal place (**ConF > dISP** parameter **dECP**)

### *Setting the kind of sensor to be connected to the device:*

Push the **Enter** button: on the lower display (green) **Opr** appears. Using the **up and down arrows** find **ConF.** Push **Enter** to confirm. Now on the green display the group **InP** appears. Push **Enter** and **InP1** is displaied. Enter to confirm.You are inside **InP1**; the green display shows **Sen1 (sensor type)**, while the red display shows the chosen sensor code Push **Enter** to enter the **Sen1** parameter, then choose the desired sensor using the **arrows.** Push **Enter** to confirm and **ESC** to escape.

Once selected the sensor, you can modify all the other parameters using **up and down arrows** according to the tables here below :

### *ConF > InP >InP1*

| Parameter | Value | Description |
|---|---|---|
| SEn1<br>type of sensor for analog input 1 | 1 | Pt100 3 wire |
| | 2 | Pt100 2 wire |
| | 3 | Pt1000 3 wire |
| | 4 | Pt1000 2 wire |
| | 5 | Ni1000 3 wire |
| | 6 | Ni1000 2 wire |
| | 7 | 0 ÷ 135 ohm |
| | 8 | Cu-CuNi T |
| | 9 | Fe-CuNi J |
| | 10 | NiCr-Ni K |
| | 11 | NiCrSi-NiSi N |
| | 12 | Pt10Rh-Pt S |
| | 13 | Pt13Rh-Pt R |
| | 14 | Pt30Rh-Pt6Rh B |
| | 15 | 0 ÷ 20mA |
| | 16 | 4 ÷ 20mA |
| | 17 | 0 ÷ 10V |
| | 18 | 0 ÷ 5V |
| | 19 | 1 ÷ 5V |
| OFF1<br>Sensor offset | -1999..**0**.. +9999 | Correction value measured by the sensor |
| SCL1<br>scale low level | -1999..**0**.. +9999 | minimum scale value(for input ohm, mA, V) |
| SCH1<br>scale high level | -1999..**100**.. +9999 | maximum scale value(for input ohm, mA, V) |
| dF1<br>digital filter | 0…**0,6**…100 | Is used to adapt the digital 2nd order input filter (time in s; 0 s = filter off) |
| Unit<br>temperature unit | **1**<br>2 | 1 = **degrees** Celsius<br>2 = degrees Fahrenheit |

(**bold** = factory settings)

### *ConF > InP >InP2*

Input 2 : this input can be used to specify an external setpoint or carry out setpoint shifting

| Parameter | Value | Description |
|---|---|---|
| FnC2 | 0<br>1<br>2<br>3 | 0= **no function**<br>1= external setpoint (display **SPE**)<br>2 =setpoint shifting (display **dSP**)<br>3 = angular positioning feedback |
| SEn2<br>tisensor type input 2 | 1 | 0 ÷ 20mA |
| | 2 | 4 ÷ 20mA |
| | 3 | 0 ÷ 10V |
| | 4 | 0 ÷ 5V |
| | 5 | 1 ÷ 5V |
| | 1 | 0 ÷ 20mA |
| OFF2<br>Sensor offset | -1999..**0**.. +9999 | Correction value measured by the sensor |
| SCL2<br>scale low level | -1999..**0**.. +9999 | minimum scale value(for input ohm, mA, V) |
| SCH2<br>scale high level | -1999..**100**.. +9999 | maximum scale value(for input ohm, mA, V) |
| dF2<br>digital filter | 0…**2**…100 | Is used to adapt the digital 2nd order input filter (time in s; 0 s = filter off) |

(**bold** = factory settings)

### *ConF > InP >InP3*

Input 3: this input is used to acquire the outside temperature

| Parameter | Value | Description |
|---|---|---|
| SEn3<br>sensor type input 3sensor type input 2 | 0 | 0 = |
| | 1 | 1 = wire |
| | 2 | 2 = wire |
| OFF3<br>Sensor offset | -1999..**0**.. +9999 | Correction value measured by the sensor |
| dF3<br>digital filter | 0…**1278**…1500 | Is used to adapt the digital 2nd order input filter (time in s; 0 s = filter off) |

(**bold** = factory settings)

### *ConF > Cntr*

Here, the type of controller, operating action, setpoint limits and presettings for self-optimization are selected

| Parameter | Value | Description |
|---|---|---|
| CtYP<br>controller type | 1<br>2 | **1 = 3-position controller (open-stop-close)**<br>2 = continuative action controller (0 ÷10V or 4 ÷ 20mA) |
| CACt<br>control action | **1**<br>0 | 1 = **heating controller**<br>0 = cooling controller |
| SPL<br>least value of the set-point range | -1999..**0**..+9999 | minimum set-point scale |
| SPH<br>maximum value of the set-point range | -1999..**100**..+999 | maximum set-point scale |
| Self-optimization | 0<br>1 | 0 = **Free**<br>1 = Locked<br>Self-optimization can only be disabled or enabled via the ACS411 setup program.<br>Self-optimization is also disabled when the parameter level is locked |
| oLLo<br>set-point limitation start, operation limit low | **-1999**.... +9999 | lower working range limit |
| oLHi<br>set-point limitation end, operation limit high | -1999.... **+9999** | upper working range limit |

(**bold** = factory settings)

### *ConF > rAFC*

Activation boiler shock termic protetion:

RWF55.. can activate the thermal shock protection only on sites where the set-point is lower than 250°C and according to **rAL** parameter

| Parameter | Value | Description |
|---|---|---|
| FnCT<br>type of contol | <br>**0**<br>1<br>2 | tchoose type of range degrees/time<br>**0 = deactived**<br>1 = Kelvin degrees/minute<br>2 = Kelvin degrees/hour |
| rASL<br>ramp rate | **0,0 …** 999,9 | Slope of thermal shock protection (only with functions 1 and 2)<br>. |
| toLP<br>tolerance band ramp | **2 x (HYS1) = 10**…9999 | width of tolerance band (in K) about the set-point<br>**0 = tolerance band inactive**<br> 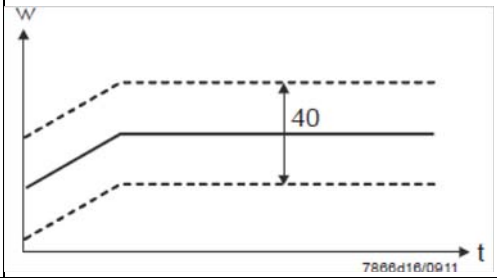 |
| rAL<br>ramp limit | **0**…250 | Ramp limit. When this value is lower than the temperature set-point, the RWF controls the output increasing the temp set point step by step according to **rASL**. If this is over the temp set point, the control is performed in cooling |

(**bold** = factory settings)

### *Alarm functionAF*

The alarm function can be used to monitor the analog inputs. If the limit value is exceeded, multifunctional relay K6 (terminals **6N** and **6P**) is activated (depending on the switching characteristic)

The alarm function can have different switching functions (lk1 to lk8) and can be set to a deviation from the active setpoint or to a fixed limit value

Limit value **AL** relative to setpoint (x)

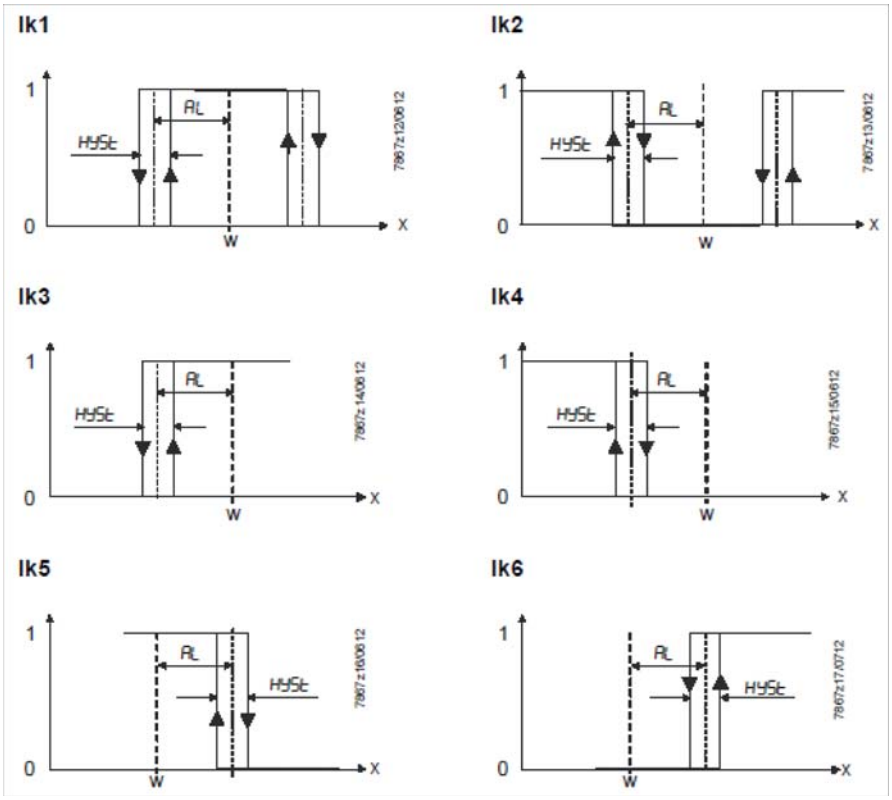


Fixed limit value **AL**

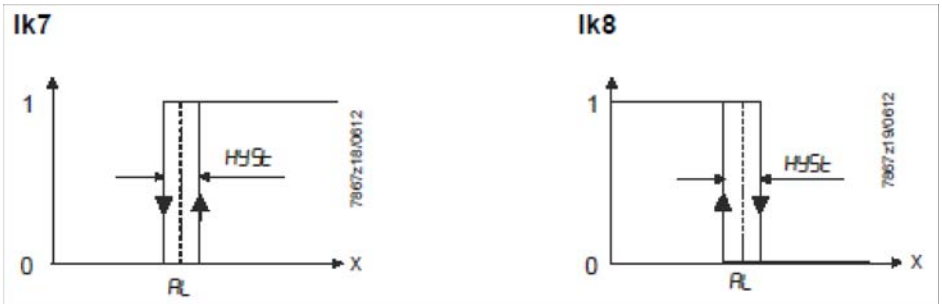

### *ConF > AF*

| Parameter | Value | Description |
|---|---|---|
| FnCt<br>type of control | 0<br>1<br>2<br>3<br>4<br>5<br>6<br>7<br>8<br>9<br>10<br>11<br>12 | 0 = **Without function**<br>Ik1 = monitored input **InP1**<br>Ik2 = monitored input **InP1**<br>Ik3 = monitored input **InP1**<br>Ik4 = monitored input **InP1**<br>Ik5 = monitored input **InP1**<br>Ik6 = monitored input **InP1**<br>Ik7 = monitored input **InP1**<br>Ik8 = monitored input **InP1**<br>Ik7 = monitored input **InP2**<br>Ik8 = monitored input **InP2**<br>Ik7 = monitored input **InP3**<br>Ik8 = monitored input **InP3** |
| Alarm value<br>AL | -1999 ...<br>**0**<br>1999 | Limit value or deviation from setpoint to be monitored (see alarm functions **Ik1** to **Ik8**: limit value **AL**)<br>Limit value range for **Ik1** and **Ik2**0 ...9999 |
| HySt<br>switching differential | 0…<br>**1**...<br>9999 | Switching differential for limit value **AL** |
| ACrA<br>response by out of range | **0**<br>1 | **Switched-off**<br>ON<br>Switching state in the case of measuring range overshoot or undershoot (Out of Range) |

(**bold** = factory settings)

### *ConF > OutP*

For fuel-air ratio control purposes, the RWF55 has the binary outputs K2, K3 (terminals KQ,K2, K3) and the analog output (terminals A+, A-). The burner is released via relay K1 (terminals 1N, 1P) .

The binary outputs of the RWF55 offer no setting choices

The RWF55 has an analog output.

The analog output offers the following setting choices:

| Parameter | Value | Description |
|---|---|---|
| FnCt<br>type of control | 1<br>2<br>3<br>**4** | 1 = analog input 1 doubling with possibility to convert<br>2 = analog input 2 doubling with possibility to convert<br>3 = analog input 3 doubling with possibility to convert<br>**4 = Controller's angular positioning is delivered (modulating controller)** |
| SiGn<br>type of output signal | <br>**0**<br>1<br>2 | physical output signal (terminals A+, A-)<br>**0 = 0÷20mA**<br>1 = 4÷20mA<br>2 = 0÷10V DC |
| rOut<br>value when out of input range | **0**…101 | signal (in percent) when measurement range is crossed |
| oPnt<br>zero point | -1999…**0**..+9999 | A value range of the output variable is assigned to a physical output signal (for **FnCt** = 1, 2, 3) |
| End<br>end point | -1999…**100**..+9999 | A value range of the output variable is assigned to a physical output signal (for **FnCt** = 1, 2, 3) |

(**bold** = factory settings)

### *ConF > binF*

This setting decides on the use of the binary inputs**D1**, **D2**, **DG**

b

| Parameter | Value | Description |
|---|---|---|
| bin1<br>binary imput 1 (terminals **DG – D1**) | **0**<br>1<br>2<br>3 | **0 = without function**<br>1 = set-point changeover (SP1 / SP2)<br>2 = Iset-point shift (Opr > dSP parameter = value of set-point modify)<br>3 = input alarm |
| bin2<br>binary imput 2 (terminalsк **DG – D2**) | **4** | **changeover of operating mode**<br>DG-D2 open = modulating operation<br>DG-D2 close = 2 stage operation |

(**bold** = factory settings)

### *ConF > dISP*

.Both displays can be customized to suit your needs by configuring the displayed value, decimal, time out and blocking

| Parameter | Value | Description |
|---|---|---|
| diSU<br>pper display (red) | 0<br>**1**<br>2<br>3<br>4<br>6<br>7 | Display value for upper display:<br>0 = display power-off<br>**1 = analog input 1 (InP1) value**<br>2 = analog input 2 (InP2) value<br>3 = analog input 3 (InP3) value<br>4 = controller's angular positioning<br>6 = set-point valueв<br>7 = end value with thermal shock protection |
| diSL<br>lower display (green) | 0<br>1<br>2<br>3<br>4<br>**6**<br>7 | Display value for lower display3:<br>0 = display power-off<br>1 = analog input 2 (InP2) value<br>2 = analog input 2 (InP2) value<br>3 = analog input 2 (InP2) value<br>4 = controller's angular positioning<br>**6 =** set-point value**в**<br>7 = end value with thermal shock protection |
| tout<br>timeout | 0..**180**..250 | time (s) on completion of which the controller returns automatically to the basic display, if no button is pressed |
| dECP<br>decimal point | **0**<br>1<br>2 | **0 = no decimal place**<br>1 = one decimal place<br>2 = two decimal place |
| CodE<br>level lockout | **0**<br>1<br>2<br>3 | **0 = no lockout**<br>1 = configuration level lockout (**ConF**)<br>2 = parameter and configuration level lockout (**PArA** & **ConF**)<br>3 = keyboard lockout |

(**bold** = factory settings)

### *ConF > IntF*

The controller can be integrated into a data network using an optional RS-485 (terminals R+ and R-) interface or an optional Profibus DP interface(only model**RWF55.6x** terminalsC1-C2-C3-C4)

| Parameter | Value | Description |
|---|---|---|
| bdrt<br>baudrate | **0**<br>1<br>2<br>3 | **0 = 4800 baud**<br>1 = 9600 baud<br>2 = 19200 baud<br>3 = 38400 baud |
| Adr<br>Device address Modbus | 0..<br>**1**..<br>254 | Address in the data network |
| dP<br>Device address Profibus | 0..**125** | only withRWF55.6x |
| dtt<br>Remote detection time | 0..<br>**30**..<br>7200s | 0 = swiched-off |

(**bold** = factory settings)

### *Manual control :*

In order to manual change the burner load, while firing keep pushing the **ESC** button for more than 5 s; on the lower green display **Hand** appears.

using the **UP** and **DOWN** arrows, the load varies.

Keep pushing the **ESC** button for getting the normal operation again.

NB: every time the device shuts the burner down (start led switched off - contact 1N-1P open), the manual control is not active.

### *Device self-setting (auto-tuning):*

If the burner in the steady state does not respond properly to heat generator requests, you can activate the Device's self-setting function, which recalculates PID values for its operation, deciding which are most suitable for the specific kind of request

Follow the below instructions:

push the **UP** and **DOWN** arrows for more than 5 s; on the green lower display **tUnE** appears. Now the device pushes the burner to increase and decrease its output. During this time, the device calculates **PID** parameters (**Pb1**, **dt** and **rt**). After the calculations, the **tUnE** is automatically deactivated and the device has already stored them.

In order to stop the Auto-tuning function while it works, push again the **UP** and **DOWN** arrows for more than 5 s. The calculated **PID** parameters can be manually modified following the previously described instructions.

### *Display of software version :*

The software version is shown by pushing Enter + UP arrow on the upper display.

### *Weather-compensated setpoint shifting(climatic regulation):*

The RWF55 can be configured so that weather-compensated setpoint shifting is activated when an LG-Ni1000 outside sensor or a Pt1000 is connected (see parameter **InP3**).

To take into account the time response of a building, weather-compensated setpoint shifting uses the attenuated outside temperature rather than the current outside temperature

The minimum and maximum setpoints can be set using the lower setpoint limit **SPL** and the upper setpoint limit **SPH** of the menù **Crtr**.

The system also prevents the lower working range limit **oLLo** and upper working range limit **oLHi** from exceeding/dropping below the system temperature limits.

The heating curve describes the relationship between the boiler temperature setpoint and the outside temperature. It is defined by 2 curve points. For 2 outside temperatures, the user defines the boiler temperature setpoint that is required in each case. The heating curve for the weather-compensated setpoint is calculated on this basis. The effective boiler temperature setpoint is limited by the upper setpoint limit **SPH** and the lower setpoint limit **SPL**.

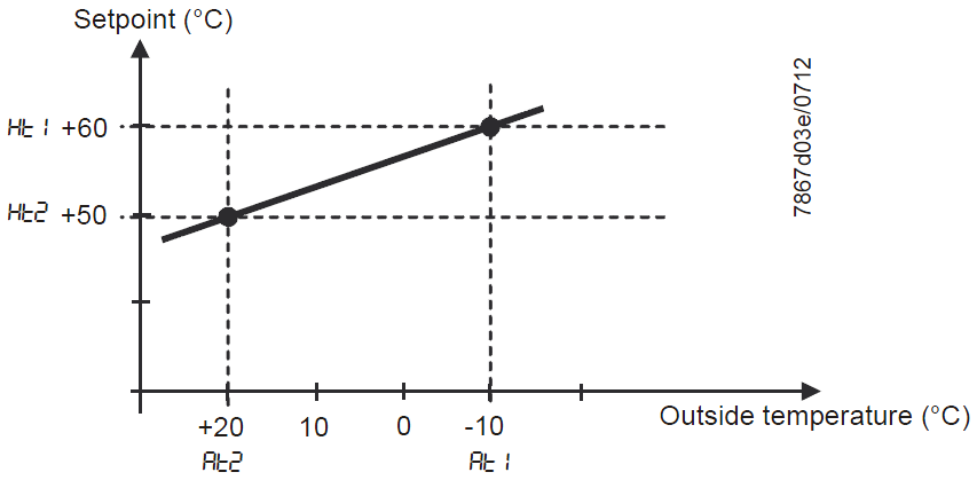


For setting climatic regulation function set:

**PArA >** parameters**At1, Ht1, At2, Ht2**

**ConF > InP > InP3** parameters**SEn3, FnC3 = 1** (Weather-compensated setpoint).

### *Modbus interface*

The tables that follow in this chapter specify the addresses of the readable and writable words that the customer is able to access. The customer may read and/or write the values using SCADA programs, PLCs, or similar.

The entries under Access have the following meanings:

**R/O** Read Only, value can only be read

**R/W** Read/Write, value can be read and written

The number of characters specified under Data type in the case of character strings includes the final \0.

Char10 means that the text is up to 9 characters long. The final \0 character is then added to this

**User level**

| **Address** | **Access** | **Data type** | Signal reference | Parameter |
|---|---|---|---|---|
| 0x0000 | R/O | Float | X1 | Analog input InP1 |
| 0x0002 | R/O | Float | X2 | Analog input InP2 |
| 0x0004 | R/O | Float | X3 | Analog input InP2 |
| 0x0006 | R/O | Float | WR | Actual setpoint |
| 0x0008 | R/W | Float | SP1 | Setpoint 1 |
| 0x000A | R/W | Float | SP2 (= dSP) | Setpoint 2 |
| 0x1035 | R/O | Float | --- | Analog input InP3 (unfiltered) |
| 0x1043 | R/O | Float | --- | Actual angular positioning |
| 0x1058 | R/O | Word | B1 | Burner alarm |

**Parameter level**

| **Address** | **Access** | **Data type** | Signal reference | Parameter |
|---|---|---|---|---|
| 0x3000 | R/W | Float | Pb1 | Proportional range 1 |
| 0x3004 | R/W | Float | dt | Derivative action time |
| 0x3006 | R/W | Float | rt | Integral action time |
| 0x300C | R/W | Float | db | Dead band |
| 0x3012 | R/W | Word | tt | Controlling element running time |
| | | | | |
| 0x3016 | R/W | Float | HYS1 | Switch-on threshold |
| 0x3018 | R/W | Float | HYS2 | Switch-off threshold down |
| 0x301A | R/W | Float | HYS3 | Switch-off threshold up |
| 0x301C | R/W | Float | HYS4 | Switch-on threshold (cooling) |
| 0x301E | R/W | Float | HYS5 | Switch-off threshold down (cooling) |
| 0x3020 | R/W | Float | HYS6 | Switch-off threshold up (cooling) |
| 0x3022 | R/W | Float | **q** | Reaction threshold |
| | | | | |
| 0x3080 | R/W | Float | At1 | Outside temperature 1 |
| 0x3082 | R/W | Float | Ht2 | Boiler temperature 1 |
| 0x3084 | R/W | Float | At2 | Outside temperature 2 |
| 0x3086 | R/W | Float | Ht2 | Boiler temperature 2 |

**Configuration level**

| Address | Access | Data type | Signal reference | Parameter |
|---|---|---|---|---|
| 0x3426 | R/W | Float | SCL1 | Start of display input 1 |
| 0x3428 | R/W | Float | SCH1 | End of display input 1 |
| 0x3432 | R/W | Float | SCL2 | Start value input 2 |
| 0x3434 | R/W | Float | SCH2 | End value input 2 |
| 0x3486 | R/W | Float | SPL | Start of setpoint limitation |
| 0x3488 | R/W | Float | SPH | End of setpoint limitation |
| 0x342A | R/W | Float | OFFS1 | Offset input E1 |
| 0x3436 | R/W | Float | OFFS2 | Offset input E2 |
| 0x343A | R/W | Float | OFFS3 | Offset input E3 |
| | | | | |
| 0x1063 | R/W | Word | FnCt | Ramp function |
| 0x1065 | R/W | Float | rASL | Ramp slope |
| 0x1067 | R/W | Float | toLP | Tolerance band ramp |
| 0x1069 | R/W | Float | rAL | Limit value |
| 0x1075 | R/W | Float | dtt | Remote Detection Timer |
| | | | | |
| 0x1077 | R/W | Float | dF1 | Filter constant input 1 |
| 0x1079 | R/W | Float | dF2 | Filter constant input 2 |
| 0x107B | R/W | Float | dF3 | Filter constant input 3 |
| 0x107D | R/O | Float | oLLo | Lower working range limit |
| 0x107F | R/O | Float | oLHi | Upper working range limit |
| | | | | |
| 0x106D | R/W | Word | FnCt | Alarm relay function |
| 0x106F | R/W | Float | AL | Alarm relay limit value (limit value alarm) |
| 0x1071 | R/W | Float | HYSt | Alarm relay hysteresis |

**Remote operation**

| Address | Access | Data type | Signal reference | Parameter |
|---|---|---|---|---|
| 0x0500 | R/W | Word | REM | Activation remote operation * |
| 0x0501 | R/W | Word | rOFF | Controller OFF in remote setpoint ** |
| 0x0502 | R/W | Float | rHYS1 | Switch-on threshold remote |
| 0x0504 | R/W | Float | rHYS2 | Switch-off threshold down remote |
| 0x0506 | R/W | Float | rHYS3 | Switch-off threshold up remote |
| 0x0508 | R/W | Float | SPr | Setpoint remote |
| | | | | |
| 0x050A | R/W | Word | RK1 | Burner release remote operation |
| 0x050B | R/W | Word | RK2 | Relay K2 remote operation |
| 0x050C | R/W | Word | RK3 | Relay K3 remote operation |
| 0x050D | R/W | Word | RK6 | Relay K6 remote operation |
| 0x050E | R/W | Word | rStEP | Step-by-step control remote operation |
| 0x050F | R/W | Float | rY | Angular positioning output remote operation |
| 0x0511 | R/W | Float | rHYS4 | Switch-on threshold remote (cooling) |
| 0x0513 | R/W | Float | rHYS5 | Switch-off threshold down remote (cooling) |
| 0x0515 | R/W | Float | rHYS6 | Switch-off threshold up remote (cooling) |

Legend

* = Local

** = Controller OFF

**Dati dell’apparecchio**

| Address | Access | Data type | Signal reference | Parameter |
|---|---|---|---|---|
| 0x8000 | R/O | Char12 | --- | Software version |
| 0x8006 | R/O | Char14 | --- | VdN number |

**Stato dell’apparecchio**

| Address | Access | Data type | Signal reference | Parameter |
|---|---|---|---|---|
| 0x0200 | R/O | Word | --- | Outputs and states |
| | | | Bit 0 | Output 1 |
| | | | Bit 1 | Output 3 |
| | | | Bit 2 | Output 2 |
| | | | Bit 3 | Output 4 |
| | | | Bit 8 | Hysteresis limitation |
| | | | Bit 9 | Control system |
| | | | Bit 10 | Self-optimization |
| | | | Bit 11 | Second setpoint |
| | | | Bit 12 | Measuring range overshoot InP1 |
| | | | Bit 13 | Measuring range overshoot InP2 |
| | | | Bit 14 | Measuring range overshoot InP3 |
| | | | Bit 15 | Calibration mode |
| | | | | |
| 0x0201 | R/O | Word | --- | Binary signals and hardware detection |
| | | | Bit 0 | Operation mode 2-stage |
| | | | Bit 1 | Manual mode |
| | | | Bit 2 | Binary input D1 |
| | | | Bit 3 | Binary input D2 |
| | | | Bit 4 | Thermostat function |
| | | | Bit 5 | First controller output |
| | | | Bit 6 | Second controller output |
| | | | Bit 7 | Alarm relay |
| | | | Bit 13 | Analog output available |
| | | | Bit 14 | Interface available |

**Electric connections :**

With 7 pins connector version

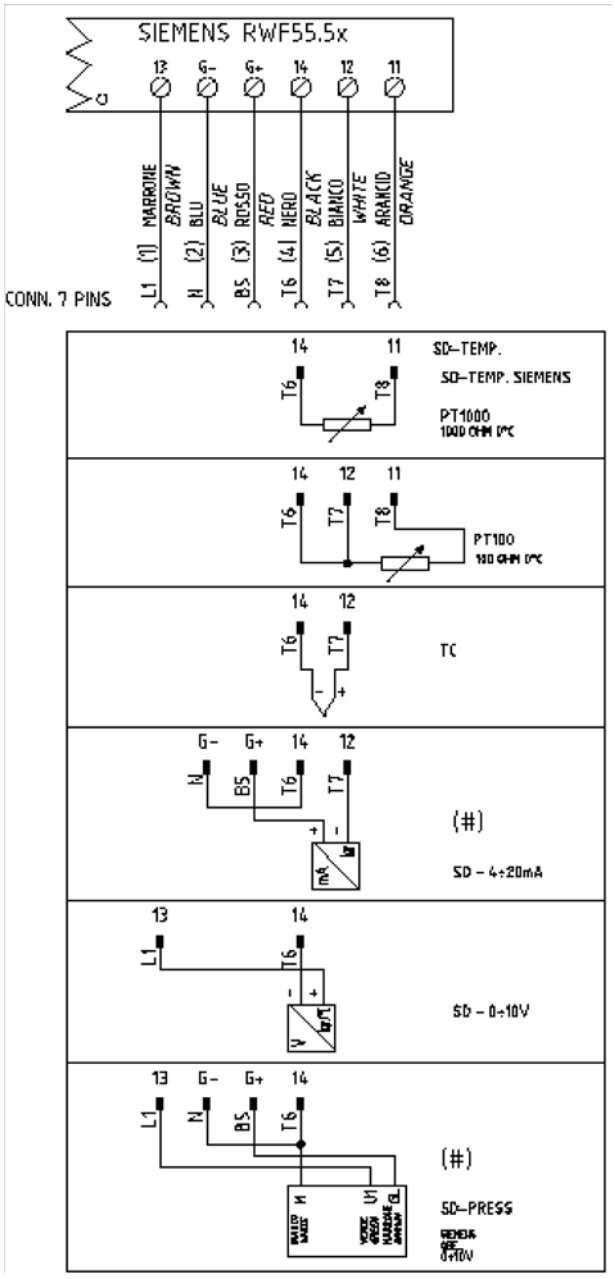


With terminals version

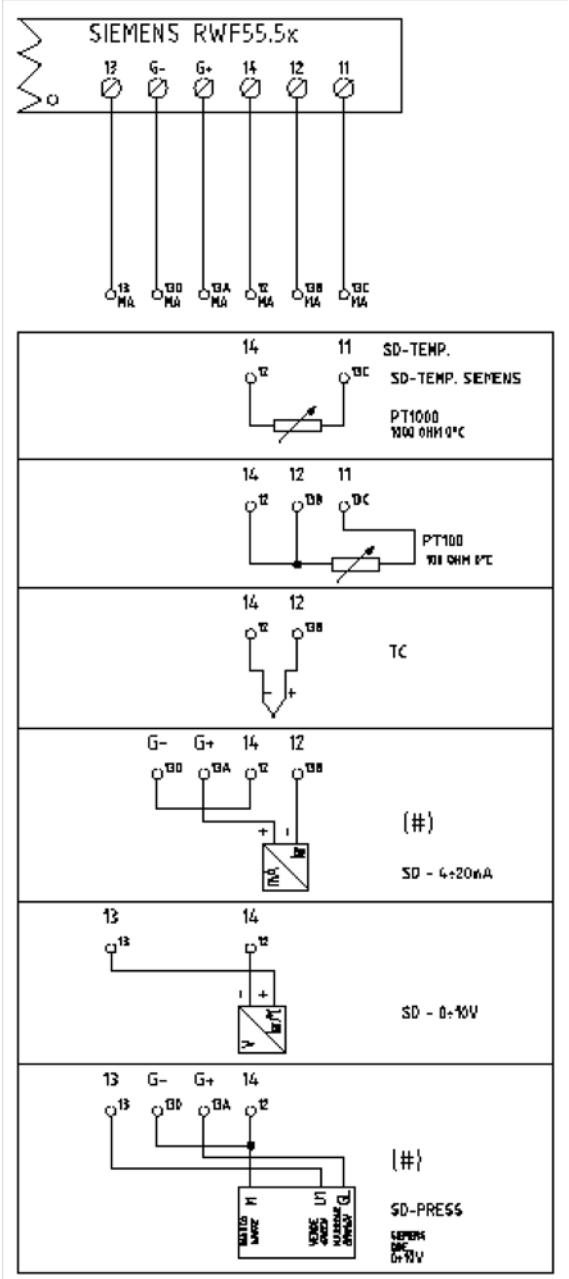


Corrispondences bornes entre RWF55.5x y RWF40.0x0Matches terminals betweenRWF55.5x and RWF40.0x0

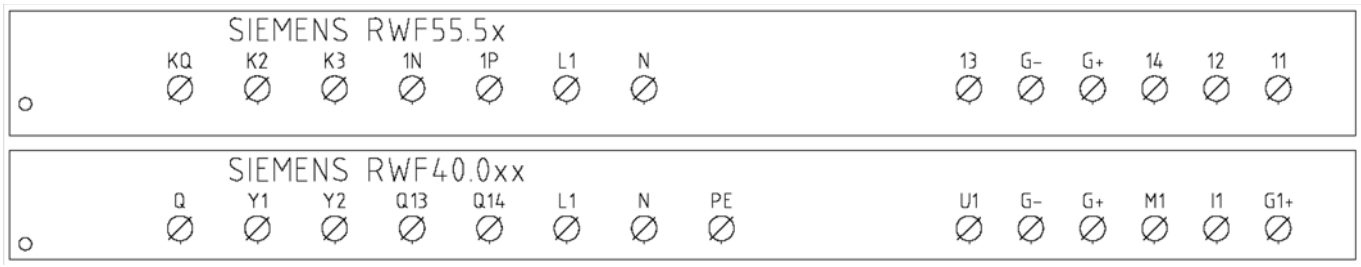

## Parameters summarising for RWF55.xx :

| Navigation menù | ConF | | | | | ConF | | | PArA | | | | | | Opr |
|---|---|---|---|---|---|---|---|---|---|---|---|---|---|---|---|
| | Inp | | | | | Cntr | | diSP | | | | | | | |
| | Inp1 | | | | | | | | | | | | | | |
| Types of probe | SEn1 | OFF1 | SCL | SCH | Unit | SPL | SPH | dECP | Pb. 1 | dt | rt | tt | HYS1 (*) | HYS3 (*) | SP1 (*) |
| Siemens QAE2120… | 6 | 0 | needless | needless | 1 | 30 | 95 | 1 | 10 | 80 | 350 | (#) | -5 | 5 | 80 °C |
| Siemens QAM2120.. | 6 | 0 | needless | needless | 1 | 0 | 80 | 1 | 10 | 80 | 350 | (#) | -2,5 | 2,5 | 40°C |
| Pt1000 (130°C max.) | 4 | 0 | needless | needless | 1 | 30 | 95 | 1 | 10 | 80 | 350 | (#) | -5 | 5 | 80°C |
| Pt1000 (350°C max.) | 4 | 0 | needless | needless | 1 | 0 | 350 | 1 | 10 | 80 | 350 | (#) | -5 | 10 | 80°C |
| Pt100 (130°C max.) | 1 | 0 | needless | needless | 1 | 0 | 95 | 1 | 10 | 80 | 350 | (#) | -5 | 5 | 80°C |
| Pt100 (350°C max) | 1 | 0 | needless | needless | 1 | 0 | 350 | 1 | 10 | 80 | 350 | (#) | -5 | 10 | 80°C |
| Probe4÷20mA / 0÷1,6bar | 16 | 0 | 0 | 160 | needless | 0 | 160 | 0 | 5 | 20 | 80 | (#) | 0 | 20 | 100 kPa |
| Probe4÷20mA / 0÷3bar | 16 | 0 | 0 | 300 | needless | 0 | 300 | 0 | 5 | 20 | 80 | (#) | 0 | 20 | 200 kPa |
| Probe 4÷20mA / 0÷10bar | 16 | 0 | 0 | 1000 | needless | 0 | 1000 | 0 | 5 | 20 | 80 | (#) | 0 | 50 | 600 kPa |
| Probe 4÷20mA / 0÷16bar | 16 | 0 | 0 | 1600 | needless | 0 | 1600 | 0 | 5 | 20 | 80 | (#) | 0 | 80 | 600 kPa |
| Probe 4÷20mA / 0÷25bar | 16 | 0 | 0 | 2500 | needless | 0 | 2500 | 0 | 5 | 20 | 80 | (#) | 0 | 125 | 600 kPa |
| Probe 4÷20mA / 0÷40bar | 16 | 0 | 0 | 4000 | needless | 0 | 4000 | 0 | 5 | 20 | 80 | (#) | 0 | 200 | 600 kPa |
| Probe 4÷20mA / 0÷60PSI | 16 | 0 | 0 | 600 | needless | 0 | 600 | 0 | 5 | 20 | 80 | (#) | 0 | 30 | 300 (30PSI) |
| Probe4÷20mA / 0÷200PSI | 16 | 0 | 0 | 2000 | needless | 0 | 2000 | 0 | 5 | 20 | 80 | (#) | 0 | 75 | 600 (60PSI) |
| Probe4÷20mA / 0÷300PSI | 16 | 0 | 0 | 3000 | needless | 0 | 3000 | 0 | 5 | 20 | 80 | (#) | 0 | 120 | 600 (60PSI) |
| Siemens QBE2002 P4 | 17 | 0 | 0 | 400 | needless | 0 | 400 | 0 | 5 | 20 | 80 | (#) | 0 | 20 | 200 kPa |
| Siemens QBE2002 P10 | 17 | 0 | 0 | 1000 | needless | 0 | 1000 | 0 | 5 | 20 | 80 | (#) | 0 | 50 | 600 kPa |
| Siemens QBE2002 P16 | 17 | 0 | 0 | 1600 | needless | 0 | 1600 | 0 | 5 | 20 | 80 | (#) | 0 | 80 | 600 kPa |
| Siemens QBE2002 P25 | 17 | 0 | 0 | 2500 | needless | 0 | 2500 | 0 | 5 | 20 | 80 | (#) | 0 | 125 | 600 kPa |
| Siemens QBE2002 P40 | 17 | 0 | 0 | 4000 | needless | 0 | 4000 | 0 | 5 | 20 | 80 | (#) | 0 | 200 | 600 kPa |
| Signal 0÷10V | 17 | 0 | needless | needless | needless | needless | needless | needless | 5 | 20 | 80 | (#) | | | |
| Signal 4÷20mA | 16 | 0 | needless | needless | needless | needless | needless | needless | 5 | 20 | 80 | (#) | | | |

**NOTE:**

(#) tt – servo control run time

SQL33 ; STM30; SQM10; SQM40; SQM50; SQM54 = 30 (secondi) - STA12B3.41; SQN30.251; SQN72.4A4A20 = 12 (secondi)

(*)These values are factory set - values must be set during operation at the plant based on the real working temperature/pressure value.

**WARNING** :

With pressure probes in bar the parameters SP1, SCH, SCL, HYS1, HYS3 must be set and displayed in kPa (kilo Pascal); 1bar = 100,000Pa = 100kPa.

With pressure probes in PSI the parameters SP1, SCH, SCL, HYS1, HYS3 must be set and displayed in PSI x10 (example: 150PSI > I display 1500).

## APPENDIX: PROBES CONNECTION

To assure the utmost comfort, the control system needs reliable information, which can be obtained provided the sensors have been installed correctly. Sensors measure and transmit all variations encountered at their location.

Measurement is taken based on design features (time constant) and according to specific operating conditions.With wiring run in raceways, the sheath (or pipe) containing the wires must be plugged at the sensor's terminal board so that currents of air cannot affect the sensor's measurements.

**Ambient probes (or ambient thermostats)**

**Installation**

The sensors (or room thermostats) must be located in reference rooms in a position where they can take real temperature measure-ments without being affected by foreign factors.

**It's good to be admired …even better to be effective**

Heating systems: the room sensor must not be installed in rooms with heating units complete with thermostatic valves. Avoid all sources of heat foreign to the system.

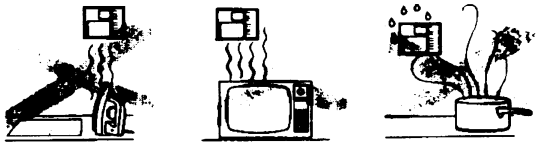

**Location**

On an inner wall on the other side of the room to heating unitsheight above floor 1.5 m, at least 1.5 m away from external sources of heat (or cold).

.

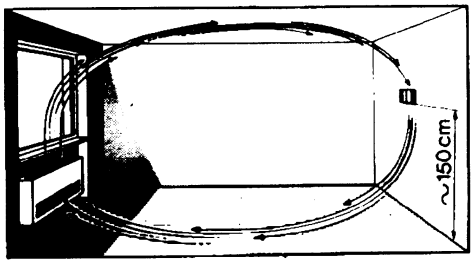


**Installation position to be avoided**

near shelving or alcoves and recesses, near doors or win-dows, inside outer walls exposed to solar radiation or currents of cold air, on inner walls with heating system pipes, domestic hot water pipes, or cooling system pipes running through them.

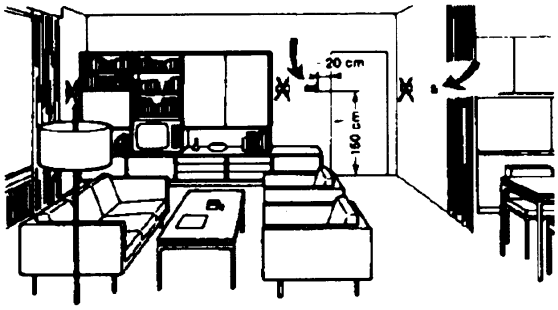


**Outside probes (weather)Installation**

In heating or air-conditioning systems featuring adjustment in response to outside temperature, the sensor's positioning is of paramount importance.

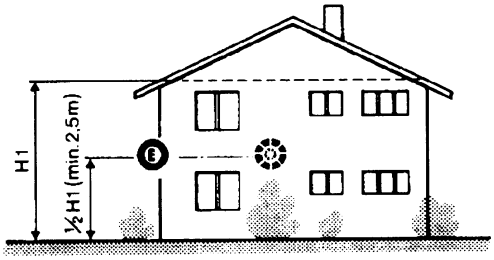


**General rule:** en on the outer wall of the building where the living rooms are, never on the south-facing wall or in a position where they will be affected by morning sun. If in any doubt, place them on the north or north-east façade.

**Positions to be avoidedH**

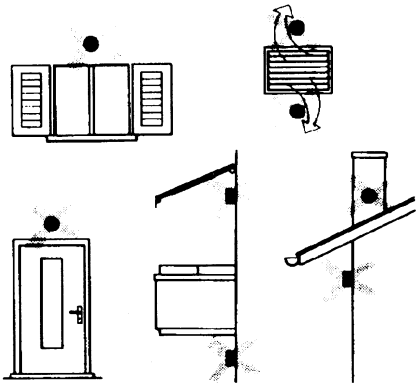

Avoid installing near windows, vents, outside the boiler room, on chimney breasts or where they are protected by balconies, cantilever roofs .

**The sensor must not be painted (measurement error) .**

**Duct or pipe sensors**

**Installing temperature sensors**

For measuring outlet air:

"after delivery fan or

"after coil to be controlled, at a distance of at least 0,5 m

For measuring room temperature:

"before return air intake fan and near room's return airintake.

For measuring saturation temperature: after mist eliminator.

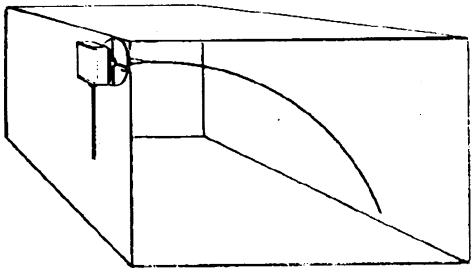

Bend 0.4m sensor by hand (never use tools) as illustrated .

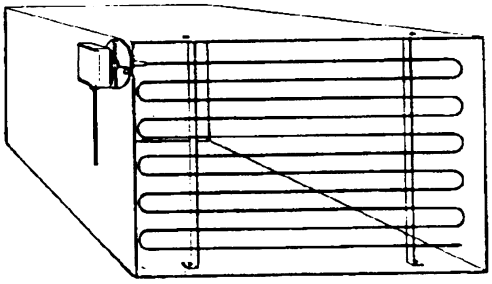

Use whole cross-section of duct, min. distance from walls 50 mm, radius of curvature 10 mm for 2m or 6m sensors

**Installing combined humidity sensors**

As max. humidity limit sensor on outlet (steam humidifiers) .

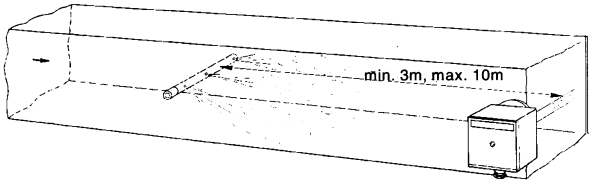


**Installing pressure sensors**

A - installation on ducts carrying fluids at max. temperature 80°C

B - installation on ducts at temperature over 80°C and for refrigerants

C - installation on ducts at high temperatures :

·"increase length of siphon

"place sensor at side to prevent it being hit by hot air coming from the pipe.

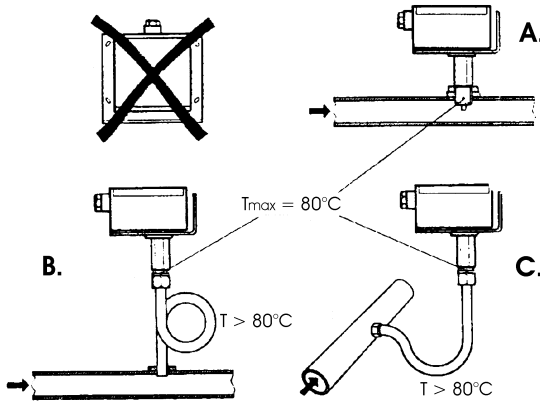


**Installing differential pressure sensors for water**

Installation with casing facing down not allowed.

With temperature over 80°C, siphons are needed.

To avoid damaging the sensor, you must comply with the following instructions :

when installing: make sure pressure difference is not greater than the value permitted by the sensor

when there are high static pressures, make sure you insert shutoff valves A-B-C.

**Putting into operation**

Start disable

1=open C1=open C

2=open A2=close B

3=open B3=close A

4= close C

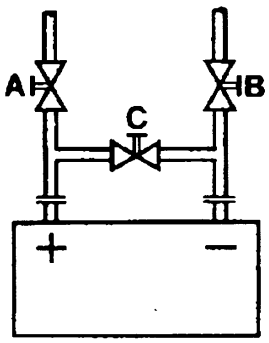

## Immersion or strap-on sensors

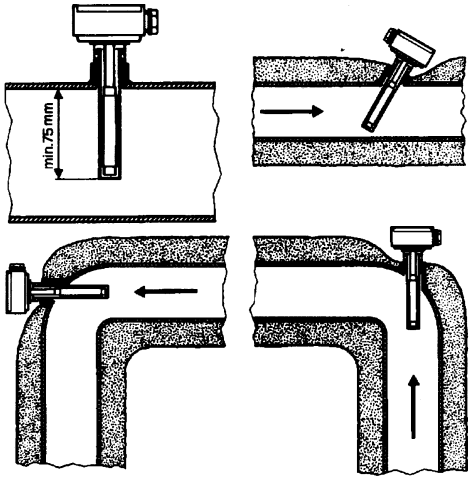


**Immersion probes installation**

Sensors must be installed on the stretch of pipe in which fluid circulates all the time.

The rigid stem (sensing element doing the measuring) must be inserted by at least 75mm and must face the direction of flow.

Recommended locations: on a bend or on a straight stretch of pipe but tilted by 45° and against the flow of fluid.

Protect them to prevent water from infiltrating (dripping gates, condensation from pipes etc.) .

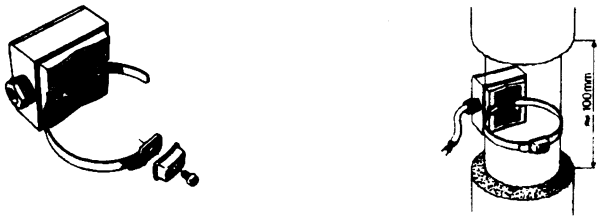


**Installing QAD2.. strap-on sensors**

Make sure fluid is circulating in the chosen location.

Eliminate insulation and paintwork (including rust inhibitor) on a min. 100mm length of pipe.

Sensors come with straps for pipes up to 100 mm in diameter .

**Placing the probes (QAD22.../QAE21.../QAP21.../RCA...)**

**With pumps on outlet**

**with 3 ways valves / with 4 ways valves**

**Panel system / burner control**

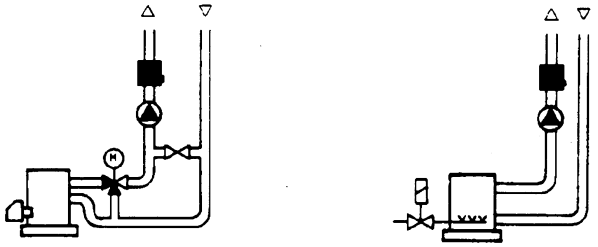

**With pumps on return**

**with 3 ways valves / with 4 ways valves**

**Strap-on or immersion sensors?**

**QAD2.. strap-on sensors**

Advantages :

- 10 sec. time constant
- Installed with system running (no plumbing work)
- Installation can be changed easily if it proves incorrect

ΠLimits:

- Suitable for pipe diameters max. 100 mm
- Can be affected by currents of air etc.

**QAE2... immersion sensors**

Advantages:

- Measure "mean" fluid temperature
- No external influence on measurement such as: currents of air, nearby pipes etc.

Limits:

- Time constant with sheath: 20 sec.
- Hard to change installation position if it proves incorrect

## Installing differential pressure probes for air

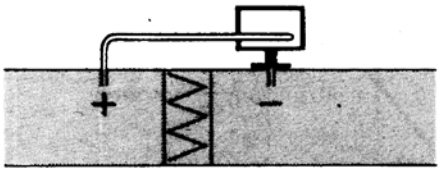


A - Control a filter (clogging)

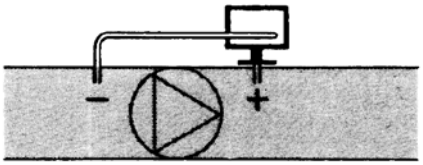


B - Control a fan (upstream/downstream)

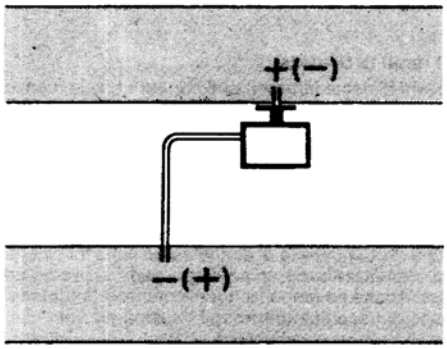


C - Measurement of difference in pressure between two ducts

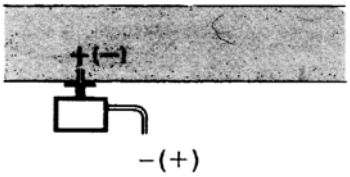


D - Measurement of difference in pressure between two rooms or of inside of duct and outside

## Basic principles

### Measuring static pressure(i.e. pressure exerted by air on pipe walls)

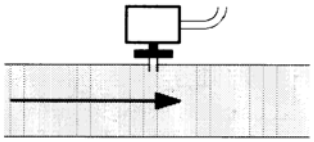

### Measuring dinamic pressure

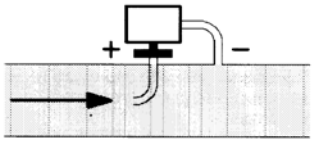


$$Pd = \frac{y\,\vartheta^2}{2g}$$

**Legend**

| | |
|---|---|
| y | Kg/m3, specific weight of air |
| q | m/s, air speed |
| g | 9.81 m/s2 gravity acceleration |
| Pd | mm C.A., dynamic pressure |

### Measuring total pressure

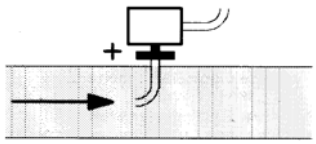

Note: Specifications and data subject to change. Errors and omissions excepted.