P91A
P92A
P93A

P512A
P515A
P520A

Gas burners
Progressive / Fully modulating

MANUAL OF INSTALLATION - USE - MAINTENANCE

CIB UNIGAS

BURNERS - BRUCIATORI - BRULERS - BRENNER - QUEMADORES - ГОРЕЛКИ

M039139CG Rev. 7 05/2021

DANGERS, WARNINGS AND NOTES OF CAUTION

THIS MANUAL IS SUPPLIED AS AN INTEGRAL AND ESSENTIAL PART OF THE PRODUCT AND MUST BE DELIVERED TO THE USER.

INFORMATION INCLUDED IN THIS SECTION ARE DEDICATED BOTH TO THE USER AND TO PERSONNEL FOLLOWING PRODUCT INSTALLATION AND MAINTENANCE.

THE USER WILL FIND FURTHER INFORMATION ABOUT OPERATING AND USE RESTRICTIONS, IN THE SECOND SECTION OF THIS MANUAL. WE HIGHLY RECOMMEND TO READ IT.

CAREFULLY KEEP THIS MANUAL FOR FUTURE REFERENCE.

1) GENERAL INTRODUCTION

- The equipment must be installed in compliance with the regulations in force, following the manufacturer's instructions, by qualified personnel.
- Qualified personnel means those having technical knowledge in the field of components for civil or industrial heating systems, sanitary hot water generation and particularly service centres authorised by the manufacturer.
- Improper installation may cause injury to people and animals, or damage to property, for which the manufacturer cannot be held liable.
- Remove all packaging material and inspect the equipment for integrity.

In case of any doubt, do not use the unit - contact the supplier.

The packaging materials (wooden crate, nails, fastening devices, plastic bags, foamed polystyrene, etc), should not be left within the reach of children, as they may prove harmful.

- Before any cleaning or servicing operation, disconnect the unit from the mains by turning the master switch OFF, and/or through the cut-out devices that are provided.
- Make sure that inlet or exhaust grilles are unobstructed.
- In case of breakdown and/or defective unit operation, disconnect the unit. Make no attempt to repair the unit or take any direct action.

Contact qualified personnel only.

Units shall be repaired exclusively by a servicing centre, duly authorised by the manufacturer, with original spare parts and accessories.

Failure to comply with the above instructions is likely to impair the unit's safety.

To ensure equipment efficiency and proper operation, it is essential that maintenance operations are performed by qualified personnel at regular intervals, following the manufacturer's instructions.

- When a decision is made to discontinue the use of the equipment, those parts likely to constitute sources of danger shall be made harmless.
- In case the equipment is to be sold or transferred to another user, or in case the original user should move and leave the unit behind, make sure that these instructions accompany the equipment at all times so that they can be consulted by the new owner and/or the installer.
- This unit shall be employed exclusively for the use for which it is meant. Any other use shall be considered as improper and, therefore, dangerous.

The manufacturer shall not be held liable, by agreement or otherwise, for damages resulting from improper installation, use and failure to comply with the instructions supplied by the manufacturer.The occurrence of any of the following circustances may cause explosions, polluting unburnt gases (example: carbon monoxide CO), burns, serious harm to people, animals and things:

- Failure to comply with one of the WARNINGS in this chapter
- Incorrect handling, installation, adjustment or maintenance of the burner
- Incorrect use of the burner or incorrect use of its parts or optional supply

2) SPECIAL INSTRUCTIONS FOR BURNERS

- The burner should be installed in a suitable room, with ventilation openings complying with the requirements of the regulations in force, and sufficient for good combustion.
- Only burners designed according to the regulations in force should be used.
- This burner should be employed exclusively for the use for which it was designed.
- Before connecting the burner, make sure that the unit rating is the same as delivery mains (electricity, gas oil, or other fuel).
- Observe caution with hot burner components. These are, usually, near to the flame and the fuel pre-heating system, they become hot during the unit operation and will remain hot for some time after the burner has stopped.

When the decision is made to discontinue the use of the burner, the user shall have qualified personnel carry out the following operations:

a Remove the power supply by disconnecting the power cord from the mains.

b Disconnect the fuel supply by means of the hand-operated shut-off valve and remove the control handwheels from their spindles.

Special warnings

- Make sure that the burner has, on installation, been firmly secured to the appliance, so that the flame is generated inside the appliance fire-box.
- Before the burner is started and, thereafter, at least once a year, have qualified personnel perform the following operations:

a set the burner fuel flow rate depending on the heat input of the appliance;

b set the flow rate of the combustion-supporting air to obtain a combustion efficiency level at least equal to the lower level required by the regulations in force;

c check the unit operation for proper combustion, to avoid any harmful or polluting unburnt gases in excess of the limits permitted by the regulations in force;

d make sure that control and safety devices are operating properly;

e make sure that exhaust ducts intended to discharge the products of combustion are operating properly;

f on completion of setting and adjustment operations, make sure that all mechanical locking devices of controls have been duly tightened;

g make sure that a copy of the burner use and maintenance instructions is available in the boiler room.

- In case of a burner shut-down, reser the control box by means of the RESET pushbutton. If a second shut-down takes place, call the Technical Service, **without trying to RESET further**.
- The unit shall be operated and serviced by qualified personnel only, in compliance with the regulations in force.

3) GENERAL INSTRUCTIONS DEPENDING ON FUEL USED

3a) ELECTRICAL CONNECTION

- For safety reasons the unit must be efficiently earthed and installed as required by current safety regulations.
- It is vital that all saftey requirements are met. In case of any doubt, ask for an accurate inspection of electrics by qualified personnel, since the manufacturer cannot be held liable for damages that may be caused by failure to correctly earth the equipment.
- Qualified personnel must inspect the system to make sure that it is adequate to take the maximum power used by the equipment shown on the equipment rating plate. In particular, make sure that the system cable cross section is adequate for the power absorbed by the unit.
- No adaptors, multiple outlet sockets and/or extension cables are permitted to connect the unit to the electric mains.
- An omnipolar switch shall be provided for connection to mains, as required by the current safety regulations.
- The use of any power-operated component implies observance of a few basic rules, for example:
  -do not touch the unit with wet or damp parts of the body and/or with bare feet;
  - do not pull electric cables;
  - do not leave the equipment exposed to weather (rain, sun, etc.) unless expressly required to do so;
  - do not allow children or inexperienced persons to use equipment;
- The unit input cable shall not be replaced by the user.
  In case of damage to the cable, switch off the unit and contact qualified personnel to replace.
  When the unit is out of use for some time the electric switch supplying all the power-driven components in the system (i.e. pumps, burner, etc.) should be switched off.

3b) FIRING WITH GAS, LIGHT OIL OR OTHER FUELS

GENERAL

- The burner shall be installed by qualified personnel and in compliance with regulations and provisions in force; wrong installation can cause injuries to people and animals, or damage to property, for which the manufacturer cannot be held liable.
- Before installation, it is recommended that all the fuel supply system pipes be carefully cleaned inside, to remove foreign matter that might impair the burner operation.
- Before the burner is commissioned, qualified personnel should inspect the following:

a the fuel supply system, for proper sealing;
b the fuel flow rate, to make sure that it has been set based on the firing rate required of the burner;
c the burner firing system, to make sure that it is supplied for the designed fuel type;
d the fuel supply pressure, to make sure that it is included in the range shown on the rating plate;
e the fuel supply system, to make sure that the system dimensions are adequate to the burner firing rate, and that the system is equipped with all the safety and control devices required by the regulations in force.

- When the burner is to remain idle for some time, the fuel supply tap or taps should be closed.

SPECIAL INSTRUCTIONS FOR USING GAS

Have qualified personnel inspect the installation to ensure that:

a the gas delivery line and train are in compliance with the regulations and provisions in force;
b all gas connections are tight;
c the boiler room ventilation openings are such that they ensure the air supply flow required by the current regulations, and in any case are sufficient for proper combustion.

- Do not use gas pipes to earth electrical equipment.
- Never leave the burner connected when not in use. Always shut the gas valve off.
- In case of prolonged absence of the user, the main gas delivery valve to the burner should be shut off.

Precautions if you can smell gas

a do not operate electric switches, the telephone, or any other item likely to generate sparks;
b immediately open doors and windows to create an air flow to purge the room;
c close the gas valves;
d contact qualified personnel.

- Do not obstruct the ventilation openings of the room where gas appliances are installed, to avoid dangerous conditions such as the development of toxic or explosive mixtures.

DIRECTIVES AND STANDARDS

Gas burners

European directives

-Regulation 2016/426/UE (appliances burning gaseous fuels)
-2014/35/UE (Low Tension Directive)
-2014/30/UE (Electromagnetic compatibility Directive)
-2006/42/EC (Machinery Directive)

Harmonized standards

-UNI EN 676 (Automatic forced draught burners for gaseous fuels)
-EN 55014-1 (Electromagnetic compatibility- Requirements for house hold appliances, electric tools and similar apparatus)
-EN 60204-1:2006 (Safety of machinery – Electrical equipment of machines.)
-CEI EN 60335-1 (Specification for safety of household and similar electrical appliances);
-CEI EN 60335-2-102 (Household and similar electrical appliances. Safety. Particular requirements for gas, oil and solid-fuel burning appliances having electrical connections).
-UNI EN ISO 12100:2010 (Safety of machinery - General principles for design - Risk assessment and risk reduction);

Light oil burners

European directives

-2014/35/UE (Low Tension Directive)
-2014/30/UE (Electromagnetic compatibility Directive)
-2006/42/EC (Machinery Directive)

Harmonized standards

-UNI EN 267-2011(Automatic forced draught burners for liquid fuels)
-EN 55014-1 (Electromagnetic compatibility- Requirements for house hold appliances, electric tools and similar apparatus)
-EN 60204-1:2006 (Safety of machinery – Electrical equipment of machines.)
-CEI EN 60335-1 (Specification for safety of household and similar electrical appliances);
-CEI EN 60335-2-102 (Household and similar electrical appliances. Safety. Particular requirements for gas, oil and solid-fuel burning appliances having electrical connections).
-UNI EN ISO 12100:2010 (Safety of machinery - General principles for design - Risk assessment and risk reduction);

National Standard

-UNI 7824 (Atomizing burners of the monobloc type. Characteristics and test methods)

Heavy oil burners

European Directives

-2014/35/UE (Low Tension Directive)
-2014/30/UE (Electromagnetic compatibility Directive)
-2006/42/EC (Machinery Directive)

Harmonized standards

-UNI EN 267(Automatic forced draught burners for liquid fuels)
-EN 55014-1 (Electromagnetic compatibility- Requirements for house hold appliances, electric tools and similar apparatus)
-EN 60204-1:2006 (Safety of machinery – Electrical equipment of machines.)
-CEI EN 60335-1 (Specification for safety of household and similar electrical appliances);
-CEI EN 60335-2-102 (Household and similar electrical appliances. Safety. Particular requirements for gas, oil and solid-fuel burning appliances having electrical connections).
-UNI EN ISO 12100:2010 (Safety of machinery - General principles for design - Risk assessment and risk reduction);

Norme nazionali / National Standard

-UNI 7824 (Atomizing burners of the monobloc type. Characteristics and test methods.

Gas - Light oil burners

European Directives

-Regulation 2016/426/UE (appliances burning gaseous fuels)
-2014/35/UE (Low Tension Directive)
-2014/30/UE (Electromagnetic compatibility Directive)
-2006/42/EC (Machinery Directive)

Harmonized standards

-UNI EN 676 (Automatic forced draught burners for gaseous fuels)
-UNI EN 267(Automatic forced draught burners for liquid fuels)
-EN 55014-1 (Electromagnetic compatibility- Requirements for house hold appliances, electric tools and similar apparatus)
-EN 60204-1:2006 (Safety of machinery – Electrical equipment of machines.)
-CEI EN 60335-1 (Specification for safety of household and similar electrical appliances);
-CEI EN 60335-2-102 (Household and similar electrical appliances. Safety. Particular requirements for gas, oil and solid-fuel burning appliances having electrical connections).
-UNI EN ISO 12100:2010 (Safety of machinery - General principles for design - Risk assessment and risk reduction);

Norme nazionali / National Standard

-UNI 7824 (Atomizing burners of the monobloc type. Characteristics and test methods.

Gas - Heavy oil burners

European directives:

-Regulation 2016/426/UE (appliances burning gaseous fuels)
-2014/35/UE (Low Tension Directive)
-2014/30/UE (Electromagnetic compatibility Directive)
-2006/42/EC (Machinery Directive)

Harmonized standards

-UNI EN 676 (Automatic forced draught burners for gaseous fuels)
-EN 55014-1 (Electromagnetic compatibility- Requirements for house hold appliances, electric tools and similar apparatus)
-EN 60204-1:2006 (Safety of machinery – Electrical equipment of machines.)
-CEI EN 60335-1 (Specification for safety of household and similar electrical appliances);
-CEI EN 60335-2-102 (Household and similar electrical appliances. Safety. Particular requirements for gas, oil and solid-fuel burning appliances having electrical connections).
-UNI EN ISO 12100:2010 (Safety of machinery - General principles for design - Risk assessment and risk reduction);

National Standard

- UNI 7824 (Atomizing burners of the monobloc type. Characteristics and test methods.

Industrial burners

European directives

-Regulation 2016/426/UE (appliances burning gaseous fuels)
-2014/35/UE (Low Tension Directive)
-2014/30/UE (Electromagnetic compatibility Directive)
-2006/42/EC (Machinery Directive)

Harmonized standards

-EN 55014-1 (Electromagnetic compatibility- Requirements for house hold appliances, electric tools and similar apparatus)
-EN 746-2 (Industrial thermoprocessing equipment - Part 2: Safety requirements for combustion and fuel handling systems)
-UNI EN ISO 12100:2010 (Safety of machinery - General principles for design - Risk assessment and risk reduction);
-EN 60204-1:2006 (Safety of machinery – Electrical equipment of machines.)
-EN 60335-2 (Electrical equipment of non-electric appliances for household and similar purposes. Safety requirements)

Burner data plate

For the following information, please refer to the data plate:

- burner type and burner model: must be reported in any communication with the supplier
- burner ID (serial number): must be reported in any communication with the supplier
- date of production (year and month)
- information about fuel type and network pressure

Type	--
Model	--
Year	--
S.Number	--
Output	--
Oil Flow	--
Fuel	--
Category	--
Gas Pressure	--
Viscosity	--
El.Supply	--
El.Consump.	--
Fan Motor	--
Protection	--
Drwaing n°	--
P.I.N.	--

SYMBOLS USED

WARNING! Failure to observe the warning may result in irreparable damage to the unit or damage to the environment

DANGER! Failure to observe the warning may result in serious injuries or death.

WARNING! Failure to observe the warning may result in electric shock with lethal consequences

Figures, illustrations and images used in this manual may differ in appearance from the actual product.

PART I: SPECIFICATIONS

GENERAL FEATURES

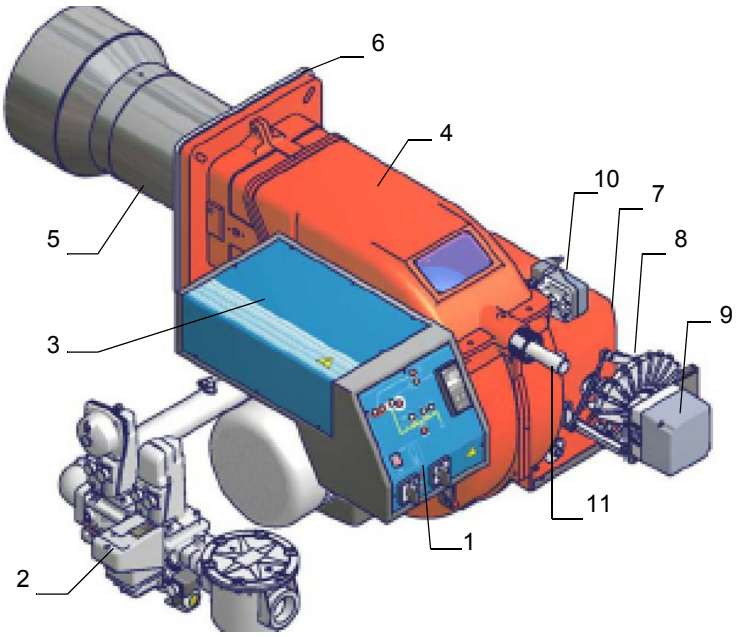

Note: the figure is indicative only

1 Control panel with startup switch
2 Gas train
3 Electrical panel
4 Cover
5 Blast tube + Combustion head
6 Flange
7 Silencer
8 Adjusting cam
9 Actuator
10 Air pressure switch
11 Combustion head adjusting ring nut

Gas operation: the gas coming from the supply line passes through filter, gas valves and pressure regulator. This one forces the pressure in the utilisation limits. The electric actuator , that moves proportionally the air damper and the gas butterfly valve, uses an adjusting cam with variable shape. This one allows the optimisation of the gas flue values, as to get an efficient combustion. The combustion head positioning determines the burner's output. The combustion head determines the energetic quality and the geometry of the flame. Fuel and comburent are routed into separated ways as far as the zone of flame generation (combustion chamber).

The control panel , placed on the burner's front side, shows each operating stage.

Burner model identification

Burners are identified by burner type and model. Burner model identification is described as follows.

Type	**P91A**	Model	**M-.**	**MD.**	**S.**	***.**	**A.**	**1.**	**80.**
	(1)		**(2)**	**(3)**	**(4)**	**(5)**	**(6)**	**(7)**	**(8)**

1	BURNER TYPE	**P91A, P92A, P93A, P512A, P515A, P520A, P525A**
2	FUEL	M - Natural gas L - LPG
3	OPERATION (Available versions)	PR - Progressive MD - Fully modulating
4	BLAST TUBE	S - Standard
5	DESTINATION COUNTRY	* - see data plate
6	BURNER VERSION	A - Standard Y - SpecialeSpecial
7	EQUIPMENT	1 = 2 gas valves + gas proving system 8 = 2 gas valves + gas proving system + maximum gas pressure switch
8	GAS CONNECTION	50 = Rp2 65 = DN65 80 = DN80 100 = DN100

Fuel

DANGER! The burner must be used only with the fuel specified in the burner data plate.

Type	--
Model	--
Year	--
S.Number	--
Output	--
Oil Flow	--
Fuel	--
Category	--
Gas Pressure	--
Viscosity	--
El.Supply	--
El.Consump.	--

Country and usefulness gas categories

GAS CATEGORY	COUNTRY																								
I_{2H}	AT	ES	GR	SE	FI	IE	HU	IS	NO	CZ	DK	GB	IT	PT	CY	EE	LV	SI	MT	SK	BG	LT	RO	TR	CH
I_{2E}	LU	PL	-	-	-	-	-	-	-	-	-	-	-	-	-	-	-	-	-	-	-	-	-	-	-
$I_{2E(R)B}$	BE	-	-	-	-	-	-	-	-	-	-	-	-	-	-	-	-	-	-	-	-	-	-	-	-
(*) I_{2EK}	NL	-	-	-	-	-	-	-	-	-	-	-	-	-	-	-	-	-	-	-	-	-	-	-	-
I_{2ELL}	DE	-	-	-	-	-	-	-	-	-	-	-	-	-	-	-	-	-	-	-	-	-	-	-	-
I_{2Er}	FR	-	-	-	-	-	-	-	-	-	-	-	-	-	-	-	-	-	-	-	-	-	-	-	-

(*) Only for I_{2EK} : the appliance was configured for the appliance category K (I2K) and is suitable for the use of G and G+ distribution gases according to the specifications as included in the NTA 8837:2012 Annex D with a Wobbe index of 43.46 – 45.3 MJ/m3 (dry, 0 °C, upper value) or 41.23 – 42.98 (dry, 15 °C, upper value). This appliance can moreover be converted and/or be calibrated for the appliance category E (I2E). This therefore implies that the appliance "is suitable for G+ gas and H gas or is demonstrably suitable for G+ gas and can demonstrably be made suitable for H gas" within the meaning of the "Dutch Decree of 10 May 2016 regarding amendment of the Dutch Gas Appliances Decree and the Dutch Commodities (Administrative Fines) Act in connection with the changing composition of gas in the Netherlands as well as technical amendment of some other decrees.

Technical Specifications

BURNER TYPE		P91A M-...	P92A M-...	P93A M-...
Output	min. - max. kW	480 - 2670	480 - 3050	550 - 4100
Fuel		M - Natural gas		
Category		(see next paragraph)		
Gas rate- Natural gas	min.- max. (Stm^3/h)	51 - 283	51 - 323	58 - 434
Gas pressure	mbar	(see Note 2)		
Power supply triphase		220/230V 3~ / 380/400V 3N ~ 50Hz		
Auxiliary Power supply		220V/230V 2~ / 220V/230V 1N ~ 50Hz		
Total power consumption	kW	4,5	6,0	8,0
Electric motor	kW	4	5,5	7,5
Protection		IP40		
Operation		Progressive - Fully modulating		
Gas train 50	Valves size / Gas connection	50 / Rp 2		
Gas train 65	Valves size / Gas connection	65 / DN65		
Gas train 80	Valves size / Gas connection	80 / DN80		
Gas train 100	Valves size / Gas connection	100 / DN100		
Operating temperature	°C	-10 ÷ +50		
Storage Temperature	°C	-20 ÷ +60		
Working service (*)		Intermitent		

BURNER TYPE		P91A L-...	P92A L-...	P93A L-...
Output	min. - max. kW	480 - 2670	480 - 3050	550 - 4100
Fuel		L - LPG		
Category		$I_{3B/P}$		
Gas rate- LPG	min.- max. (Stm^3/h)	17.9 - 100	17.9 - 114	20 - 153
Gas pressure	mbar	(see Note 2)		
Power supply triphase		220/230V 3~ / 380/400V 3N ~ 50Hz		
Auxiliary Power supply		220V/230V 2~ / 220V/230V 1N ~ 50Hz		
Total power consumption	kW	4,5	6,0	8,0
Electric motor	kW	4	5,5	7,5
Protection		IP40		
Operation		Progressive - Fully modulating		
Gas train 50	Valves size / Gas connection	50 / Rp 2		
Gas train 65	Valves size / Gas connection	65 / DN65		
Gas train 80	Valves size / Gas connection	80 / DN80		
Gas train 100	Valves size / Gas connection	100 / DN100		
Operating temperature	°C	-10 ÷ +50		
Storage Temperature	°C	-20 ÷ +60		
Working service (*)		Intermitent		

Note1:	**All gas flow rates are referred to Stm^3 / h (1.013 mbar absolute pressure, 15 °C temperature) and are valid for G20 gas (net calorific value H_i = 34,02 MJ / Stm^3); for L.P.G. (net calorific value H_i = 93,5 MJ / Stm^3)**
Note2:	**Maximum gas pressure = 360 mbar (with Dungs MBDLE)** **= 500 mbar (with Siemens VGD or Dungs MultiBloc MBE)** **Minimum gas pressure = see gas curves.**
Note3:	**Burners are suitable only for indoor operation with a maximum relative humidity of 80 %**

(*) NOTE ON THE WORKING SERVICE: the control box automatically stops after 24h of continuous working. The control box immediately starts up, automatically.

BURNER TYPE		P512A M-...	P515A M-...	P520A M-...	P525A M-....50	P525A M-....xx
Output	min. - max. kW	600 - 4500	770 - 5200	1000 - 6400	2000 - 6700	2000 - 8000
Fuel		M - Natural gas				
Category		(see next paragraph)				
Gas rate- Natural gas	min.- max. (Stm^3/h)	63 - 476	81 - 550	106 - 677	212 - 709	212 - 847
PressureGas pressure	mbar	(see Note 2)				
Power supply triphase		220/230V 3~ / 380/400V 3N ~ 50Hz				
Auxiliary Power supply		220V/230V 2~ / 220V/230V 1N ~ 50Hz				
Total power consumption	kW	9,7	11,5	15,5	19	19
Electric motor	kW	9.2	11	15	18,5	18,5
Protection		IP40				
Operation		Progressive - Fully modulating				
Gas train 50	Valves size / Gas connection	50 / Rp2	50 / Rp2	50 / Rp2	50 / Rp2	
Gas train 65	Valves size / Gas connection	65 / DN65	65 / DN65	65 / DN65	-	65 / DN65
Gas train 80	Valves size / Gas connection	80 / DN80	80 / DN80	80 / DN80	-	80 / DN80
Gas train 100	Valves size / Gas connection	100 / DN100	100 / DN100	100 / DN100	-	100 / DN100
Operating temperature	°C	-10 ÷ +50				
Storage Temperature	°C	-20 ÷ +60				
Working service (*)		Intermitent				

BURNER TYPE		P512A L-...	P515A L-...	P520A L-...	P525A L-....50	P525A L-....xx
Output	min. - max. kW	600 - 4500	770 - 5200	1000 - 6400	2000 - 6700	2000 - 8000
Fuel		L - LPG				
Category		$I_{3B/P}$				
Gas rate- LPG	min.- max. (Stm^3/h)	22 - 167	28 - 194	37 - 238	74 - 250	74 - 300
PressureGas pressure	mbar	(see Note 2)				
Power supply triphase		220/230V 3~ / 380/400V 3N ~ 50Hz				
Auxiliary Power supply		220V/230V 2~ / 220V/230V 1N ~ 50Hz				
Total power consumption	kW	9,7	11,5	15,5	19	19
Electric motor	kW	9,2	11	15	18,5	18,5
Protection		IP40				
Operation		Progressive - Fully modulating				
Gas train 50	Valves size / Gas connection	50 / Rp2	50 / Rp2	50 / Rp2	50 / Rp2	
Gas train 65	Valves size / Gas connection	65 / DN65	65 / DN65	65 / DN65	-	65 / DN65
Gas train 80	Valves size / Gas connection	80 / DN80	80 / DN80	80 / DN80	-	80 / DN80
Gas train 100	Valves size / Gas connection	100 / DN100	100 / DN100	100 / DN100	-	100 / DN100
Operating temperature	°C	-10 ÷ +50				
Storage Temperature	°C	-20 ÷ +60				
Working service (*)		Intermitent				

Note1:	**All gas flow rates are referred to Stm^3 / h (1.013 mbar absolute pressure, 15 °C temperature) and are valid for G20 gas (net calorific value H_i = 34,02 MJ / Stm^3); for L.P.G. (net calorific value H_i = 93,5 MJ / Stm^3)**
Note2:	**Maximum gas pressure = 360 mbar (with Dungs MBDLE)** **= 500 mbar (with Siemens VGD or Dungs MultiBloc MBE)** **Minimum gas pressure = see gas curves.**
Note3:	**Burners are suitable only for indoor operation with a maximum relative humidity of 80 %**

(*) NOTE ON THE WORKING SERVICE: the control box automatically stops after 24h of continuous working. The control box immediately starts up, automatically.

Overall dimensions (mm) - P91A, P92A, P93A, P512A-P515A, P520A, P525A

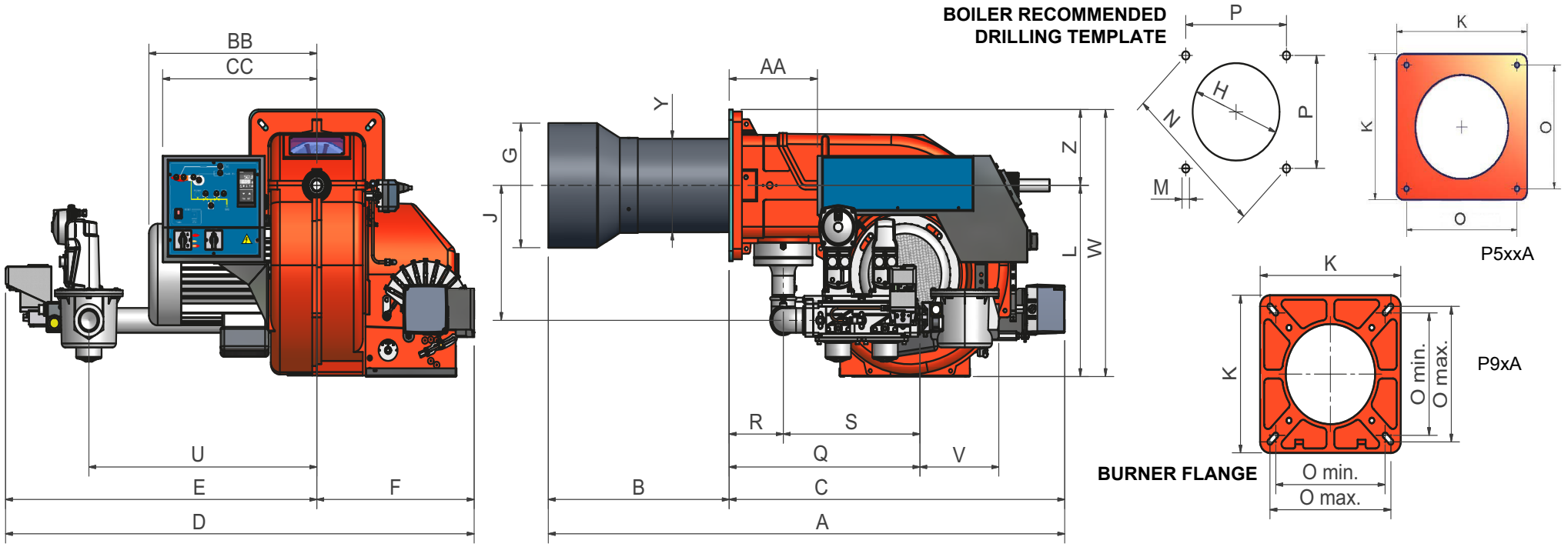

,** It is recommended to fit a counterflange between burner and boiler. As an alternative, make a smaller hole H, but greather than Y and fit the blast tube from the internal side of boiler.

NOTE: the overall dimensions are referred to burners provided with Siemens VGD valves.

	DN*	A	AA	B	BB	C	CC	D	E	F	G	H	J	K	L	M	N	Omin	Omax	P	Q	R	S	U	V	W	Y	Z
P91A	50	1408	242	490	419	918	422	1283	852	431	265	295	329	360	466	M12	417	280	310	295	522	148	374	624	216	651	228	185
	65	1408	242	490	419	918	422	1388	957	431	265	295	288	360	466	M12	417	280	310	295	551	148	403	750	313	651	228	185
	80	1408	242	490	419	918	422	1390	959	431	265	295	307	360	466	M12	417	280	310	295	592	148	444	750	324	651	228	185
	100	1408	242	490	419	918	422	1480	1049	431	265	295	447	360	592	M12	417	280	310	295	672	148	524	824	405	777	228	185
P92A	50	1408	242	490	419	918	422	1283	852	431	269	299	329	360	466	M12	417	280	310	295	522	148	374	624	216	651	228	185
	65	1408	242	490	419	918	422	1388	957	431	269	299	288	360	466	M12	417	280	310	295	551	148	403	750	313	651	228	185
	80	1408	242	490	419	918	422	1390	959	431	269	299	307	360	466	M12	417	280	310	295	592	148	444	750	324	651	228	185
	100	1408	242	490	419	918	422	1480	1049	431	269	299	447	360	592	M12	417	280	310	295	672	148	524	824	405	777	228	185
P93A	50	1413	242	495	460	918	422	1283	852	431	304	344	329	360	466	M12	417	280	310	295	522	148	374	624	216	651	228	185
	65	1413	242	495	460	918	422	1388	957	431	304	344	288	360	466	M12	417	280	310	295	551	148	403	750	313	651	228	185
	80	1413	242	495	460	918	422	1390	959	431	304	344	307	360	466	M12	417	280	310	295	592	148	444	750	324	651	228	185
	100	1413	242	495	460	918	422	1480	1049	431	304	344	447	360	592	M12	417	280	310	295	672	148	524	824	405	777	228	185

BS = standard blast tube BL = long blast tube DN = gas valves size

B*: SPECIAL blast tube lengths must be agreed with **Cib Unigas**

	DN*	A	AA	B	BB	C	CC	D	E	F	G	H	J	K	L	M	N	O	P	Q	R	S	U	V	W	Y	Z
P512A	50	1541	332	520	511	1021	455	1429	938	491	340	380	337	460	498	M14	552	390	390	685	160	525	710	216	733	286	235
	65	1541	332	520	511	1021	455	1448	957	491	340	380	337	460	498	M14	552	390	390	563	160	403	750	313	733	286	235
	80	1541	332	520	511	1021	455	1450	959	491	340	380	354	460	498	M14	552	390	390	604	160	444	750	344	733	286	235
	100	1541	332	520	511	1021	455	1540	1049	491	340	380	392	460	498	M14	552	390	390	684	160	524	824	405	733	286	235
P515A	50	1541	332	520	511	1021	455	1429	938	491	380	420	337	460	498	M14	552	390	390	685	160	525	710	216	733	312	235
	65	1541	332	520	511	1021	455	1448	957	491	380	420	337	460	498	M14	552	390	390	563	160	403	750	313	733	312	235
	80	1541	332	520	511	1021	455	1450	959	491	380	420	354	460	498	M14	552	390	390	604	160	444	750	344	733	312	235
	100	1541	332	520	511	1021	455	1540	1049	491	380	420	392	460	498	M14	552	390	390	684	160	524	824	405	733	312	235
P520A	50	1541	332	520	511	1021	455	1429	938	491	400	440	337	460	498	M14	552	390	390	685	160	525	710	216	733	328	235
	65	1541	332	520	511	1021	455	1448	957	491	400	440	337	460	498	M14	552	390	390	563	160	403	750	313	733	328	235
	80	1541	332	520	511	1021	455	1450	959	491	400	440	354	460	498	M14	552	390	390	604	160	444	750	344	733	328	235
	100	1541	332	520	511	1021	455	1540	1049	491	400	440	392	460	498	M14	552	390	390	684	160	524	824	405	733	328	235
P525A	50	1541	230	520	653	1021	573	1562	1071	491	434	474**	494	460	595	M14	552	390	390	765	160	605	843	216	830	328	235
	65	1541	230	520	653	1021	573	1540	1049	491	434	474**	494	460	610	M14	552	390	390	643	160	483	843	313	845	328	235
	80	1541	230	520	653	1021	573	1575	1084	491	434	474**	494	460	626	M14	552	390	390	695	160	535	875	344	861	328	235
	100	1541	230	520	653	1021	573	1658	1167	491	434	474**	494	460	639	M14	552	390	390	802	160	642	942	405	874	328	235

BS = standard blast tube BL = long blast tube DN = gas valves size

B*: SPECIAL blast tube lengths must be agreed with **Cib Unigas**

How to read the burner "Performance curve"

To check if the burner is suitable for the boiler to which it must be installed, the following parameters are needed:

- furnace input, in kW or kcal/h (kW = kcal/h/860);
- backpressure (data are available on the boiler ID plate or in the user's manual).

Example:

Furnace input: 600kW

Backpressure: 4 mbar

In the "Performance curve" diagram, draw a vertical line matching the furnace input value and an horizontal line matching the backpressure value. The burner is suitable if the intersection point A is inside the performance curve.
Data are referred to standard conditions: atmospheric pressure at 1013 mbar, ambient temperature at 15° C.

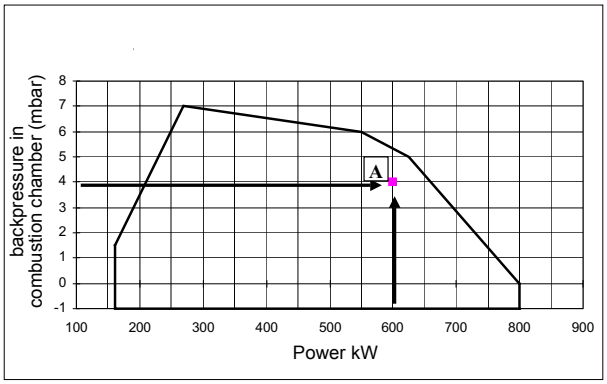

Checking the proper gas train size

To check the proper gas train size, it is necessary to the available gas pressure value upstream the burner's gas valve. Then subtract the backpressure. The result is called **pgas.** Draw a vertical line matching the furnace input value (600kW, in the example), quoted on the x-axis, as far as intercepitng the network pressure curve, according to the installed gas train (DN65, in the example). From the interception point, draw an horizontal line as far as matching, on the y-axis, the value of pressure necessary to get the requested furnace input. This value must be lower or equal to the **pgas** value, calculated before.

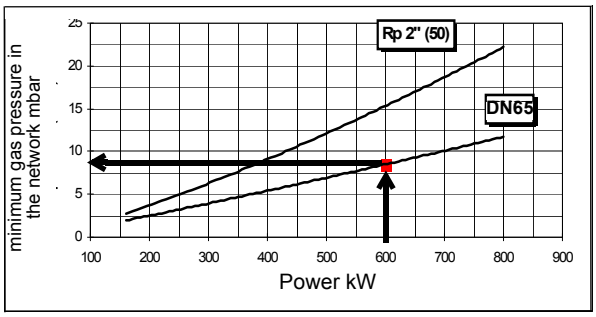

Performance Curves

P91A

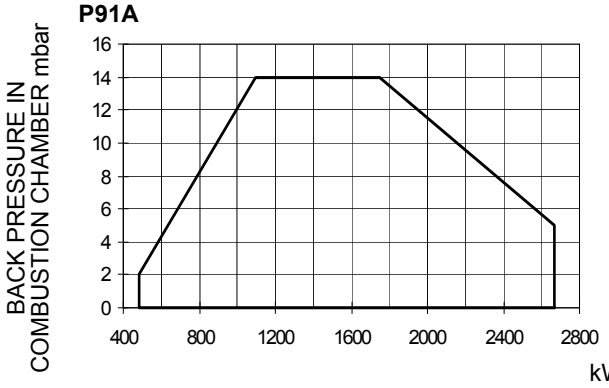

P92A

P93A

P512A

P515A

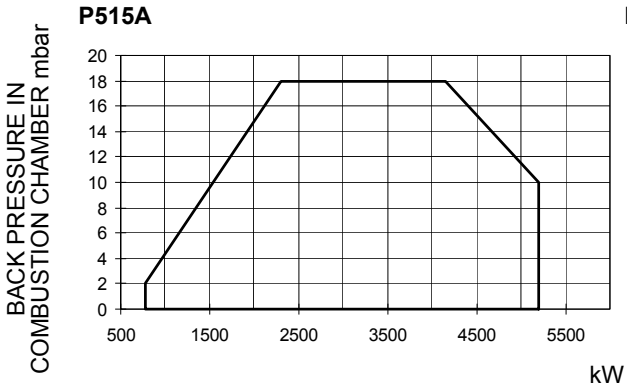

P520A

P525A Rp2

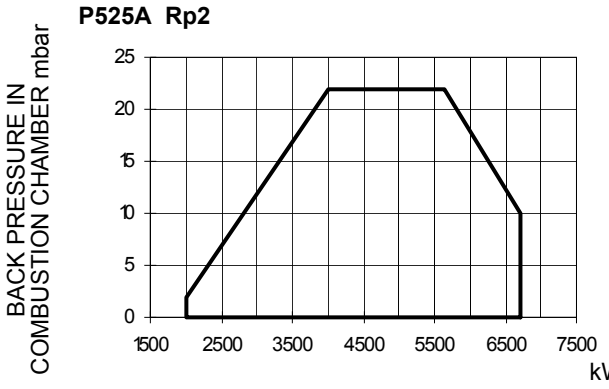

P525A DN65-80-100

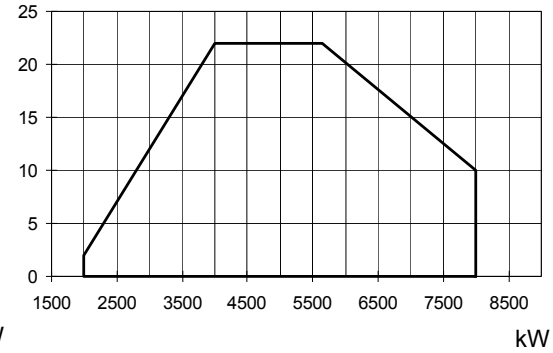

To get the input in kcal/h, multiply value in kW by 860.

Data are referred to standard conditions: atmospheric pressure at 1013mbar, ambient temperature at 15° C

NOTE: The performance curve is a diagram that represents the burner performance in the type approval phase or in the laboratory tests, but does not represent the regulation range of the machine. On this diagram the maximum output point is usually reached by adjsuting the combustion head to its "MAX" position (see paragraph "Adjusting the combustion head"); the minimum output point is reached setting the combustion head to its "MIN" position. During the first ignition, the combustion head is set in order to find a compromise between the burner output and the generator specifications, that is why the minimum output may be different from the Performance curve minimum

Pressure in the Network / gas flow rate curves (natural gas)

P91A M-..

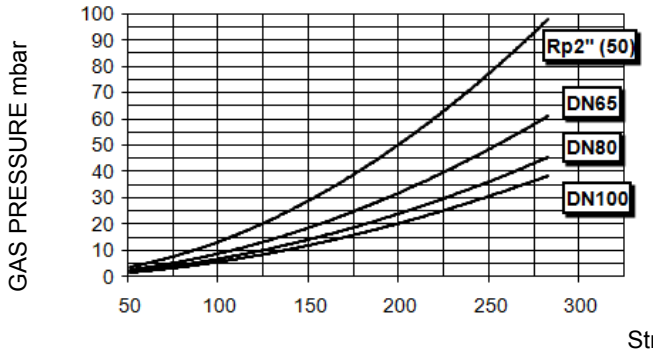

P92A M-..

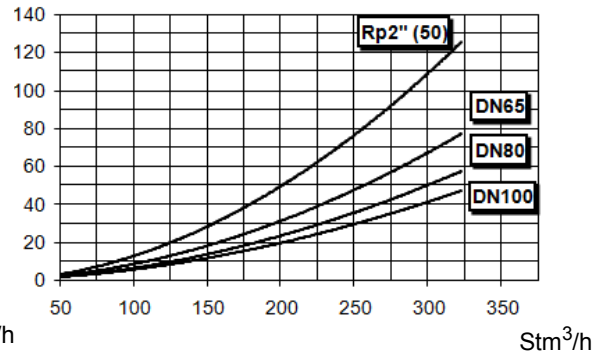

P93A M-..

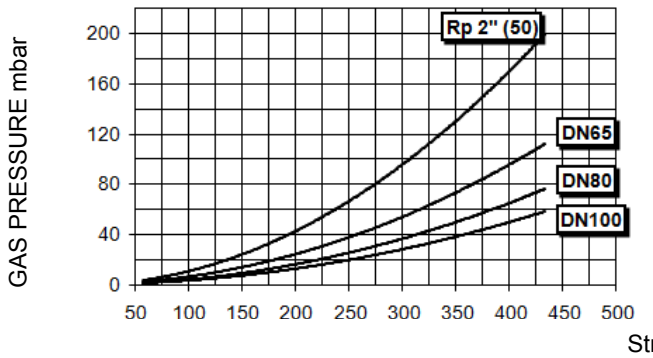

P512A M-..

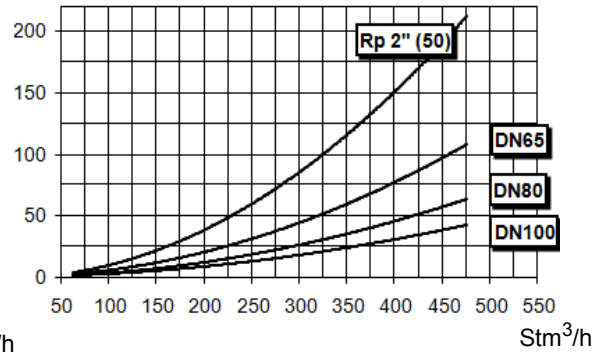

P515A M-..

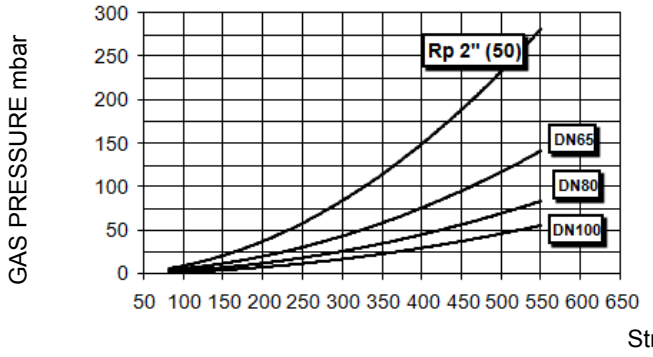

P520A M-..

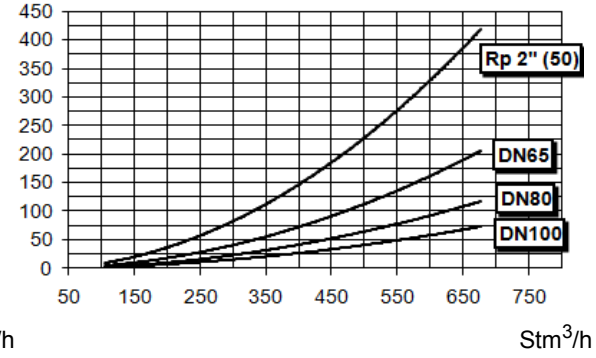

P525A M-.. Rp2

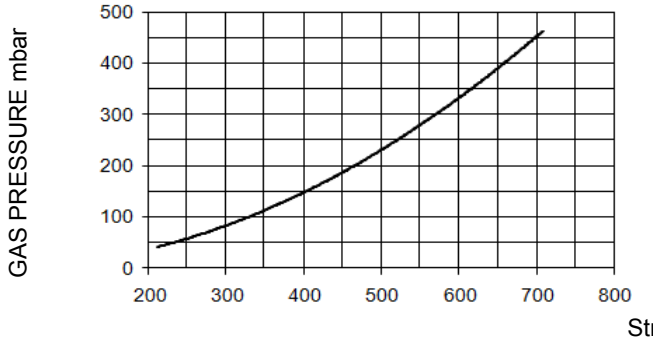

P525A M-.. DN65-80-100

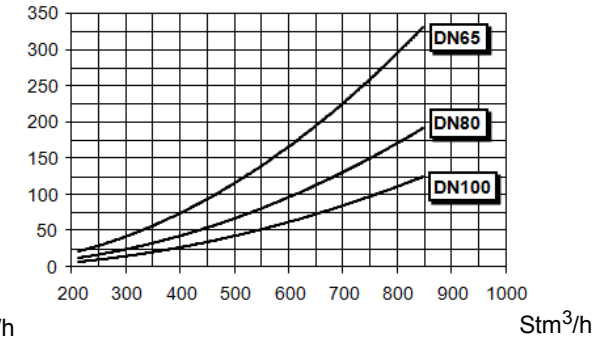

ATTENTION: the gas rate value is quoted on the x-axis, the related network pressure is quoted on the y-axis (pressure value in the combustion chamber is not included). To know the minimum pressure at the gas train inlet, necessary to get the requested gas rate, add the pressure value in the combustion chamber to the value read on the y-axis.

Pressure in the Network / gas flow rate curves(LPG)

P91A L-..

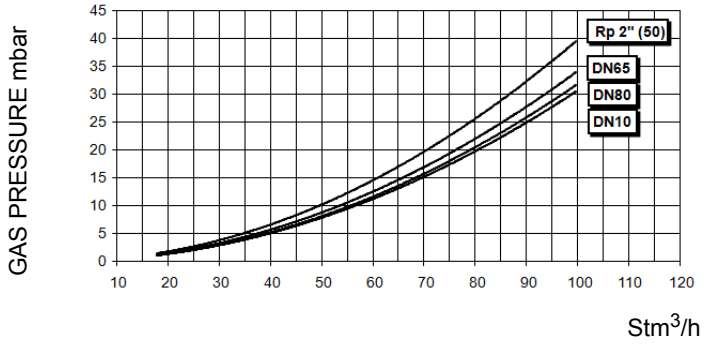

P93A L-..

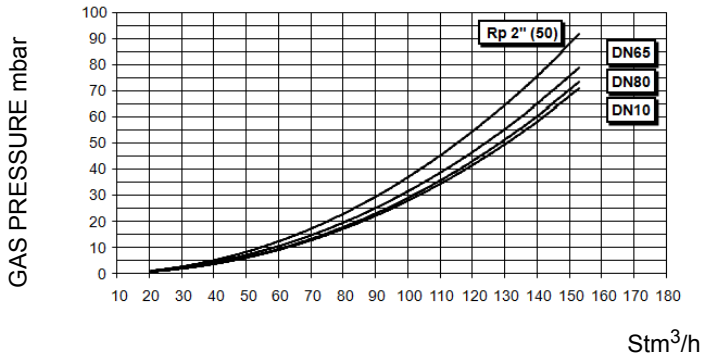

P512A L-..

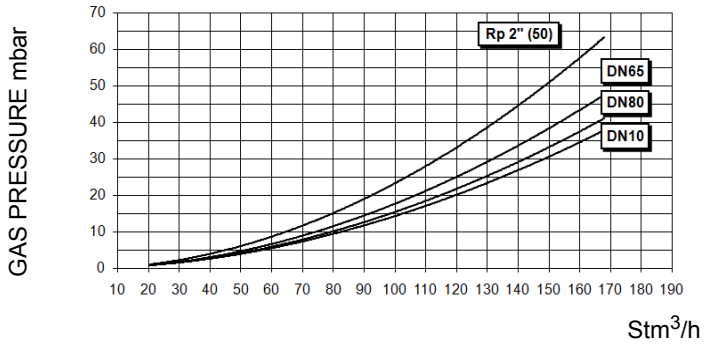

P520AL-..

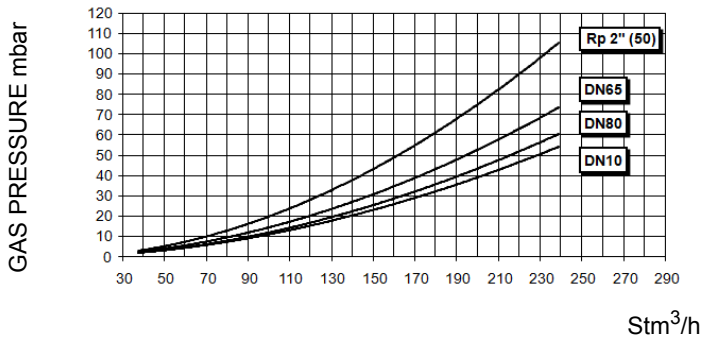

ATTENTION: the gas rate value is quoted on the x-axis, the related network pressure is quoted on the y-axis (pressure value in the combustion chamber is not included). To know the minimum pressure at the gas train inlet, necessary to get the requested gas rate, add the pressure value in the combustion chamber to the value read on the y-axis.

Combustion head gas pressure curves

Combustion head gas pressure depends on gas flow and combustion chamber backpressure. When backpressure is subtracted, i depends only on gas flow, provided combustion is properly adjusted, flue gases residual O2 percentage complies with “Recommendec combustion values” table and CO in the standard limits). During this stage, the combustion head, the gas butterfly valve and the actuator are at the maximum opening. Refer to , showing the correct way to measure the gas pressure, considering the values o pressure in combustion chamber, surveyed by means of the pressure gauge or taken from the boiler’s Technical specifications.
.

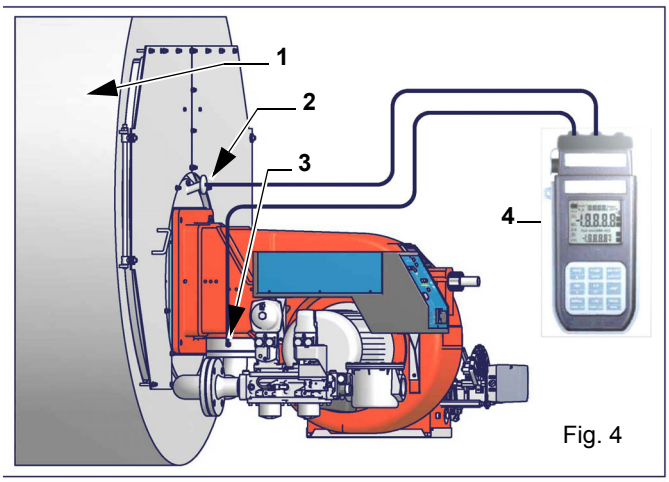

Fig. 4

Note: the figure is indicative only.Key

1 Generator
2 Pressure outlet on the combustion chamber
3 Gas pressure outlet on the butterfly valve
4 Differential pressure gauge

ATTENTION: THE BURNED GAS RATE MUST BE READ AT THE GAS FLOW METER. WHEN IT IS NOT POSSIBLE, THE USER CAN REFERS TO THE PRESSURE-RATE CURVES AS GENERAL INFORMATION ONLY.

Measuring gas pressure in the combustion head

In order to measure the pressure in the combustion head, insert the pressure gauge probes: one into the combustion chamber’s pressure outlet to get the pressure in the combustion chamber and the other one into the butterfly valve’s pressure outlet of the burner. On the basis of the measured differential pressure, it is possible to get the maximum flow rate: in the pressure - rate curves (showed on

The values in the diagrams refer to **natural gas** with a calorific value of 8125 kcal/Stm^3 (15°C, 1013 mbar) and a density of 0.714 kg/Stm^3 .

The values in the diagrams refer to **GPL** with a calorific value of 22300 kcal/Stm^3 (15°C, 1013 mbar) and a density of 2.14 kg/Stm^3. When the calorific value and the density change, the pressure values should be adjusted accordingly.

$$\Delta p2 = \Delta p1 \ * \left(\frac{Q2}{Q1}\right)^2 * \left(\frac{\rho 2}{\rho 1}\right)$$

Where:

$p1$ Natural gas pressure shown in diagram
$p2$ Real gas pressure
$Q1$ Natural gas flow rate shown in diagram
$Q2$ Real gas flow rate
$\rho 1$ Natural gas density shown in diagram
$\rho 2$ Real gas density

Pressure - rate in combustion head curves (natural gas)

Curves are referred to pressure = 0 mbar in the combustion chamber!

P91A M-..

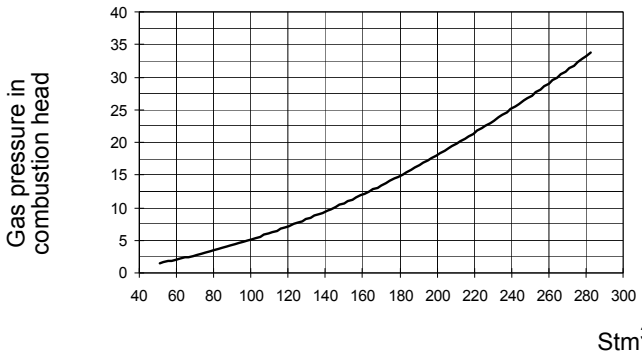

P92A M-..

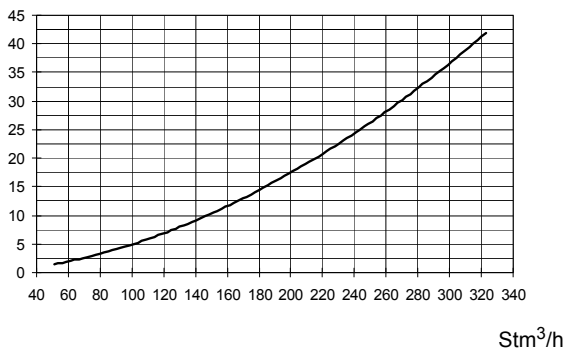

P93A M-..

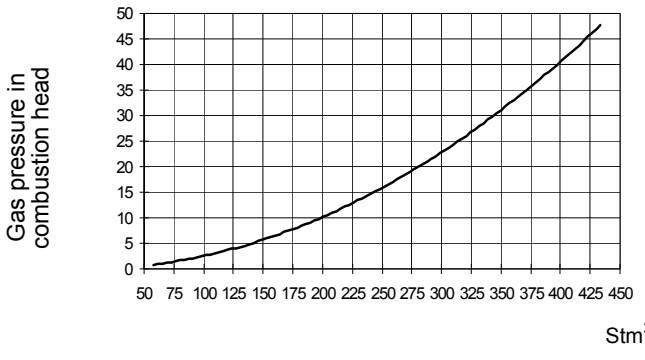

P512A M-..

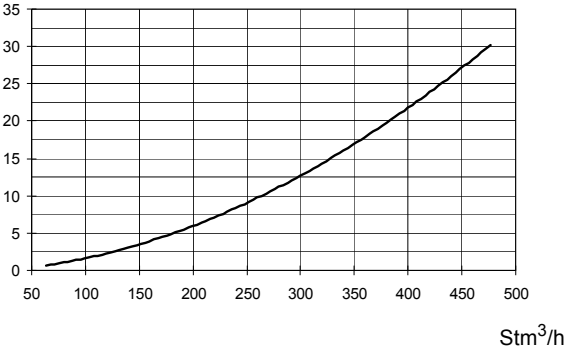

P515A M-..

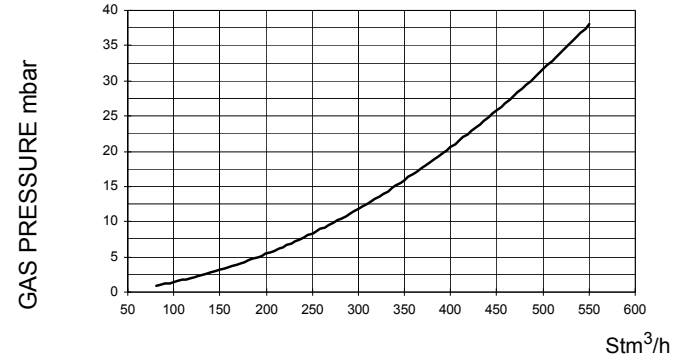

P520A M-..

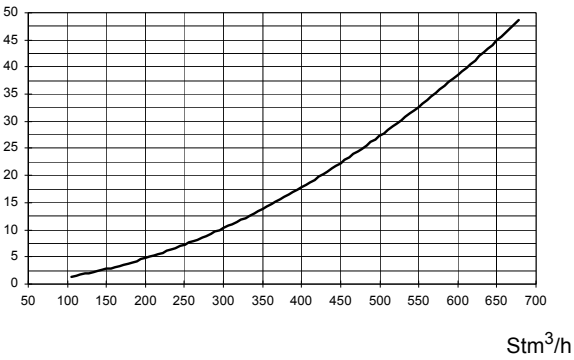

P525A M-.. Rp2

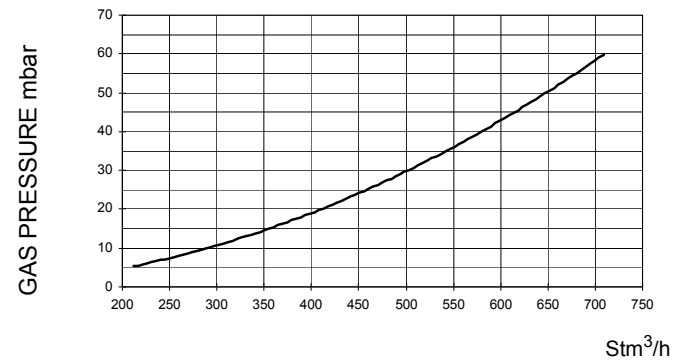

P525A M-.. DN65-80-100

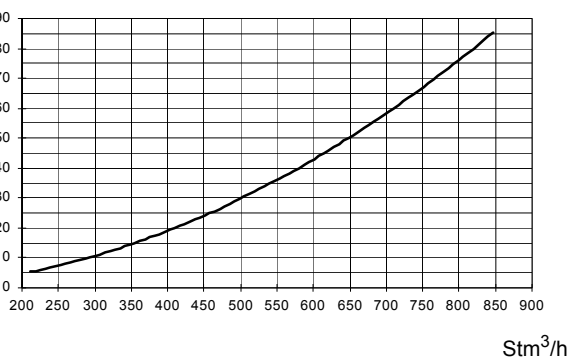

Pressure - rate in combustion head curves (LPG)

Curves are referred to pressure = 0mbar in the combustion chamber!

P91A L-..

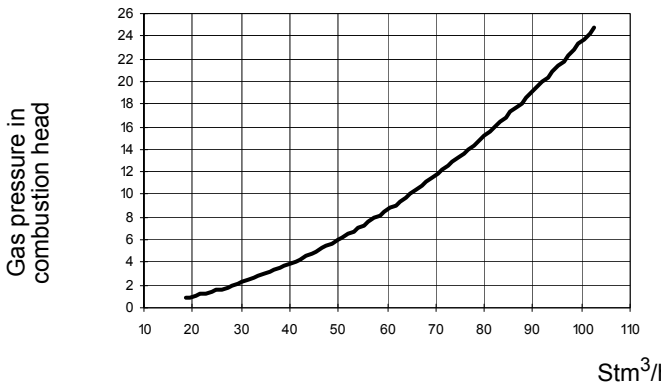

P93A L-..

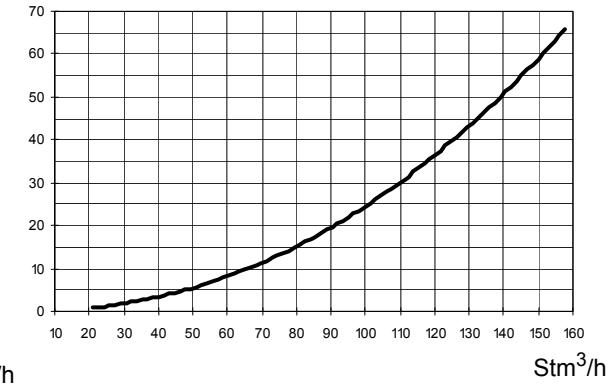

P512A L-..

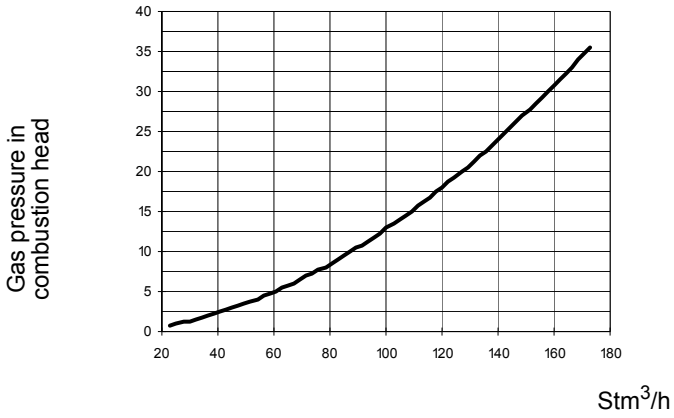

P520A L-..

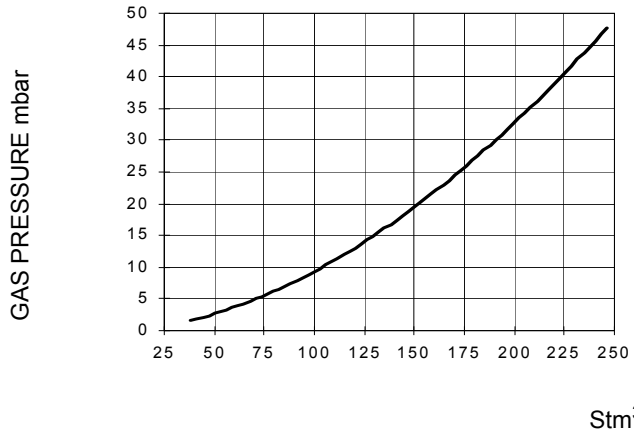

PART II: INSTALLATION

MOUNTING AND CONNECTING THE BURNER

Transport and storage

ATTENTION! The equipment must be installed in compliance with the regulations in force, following the manufacturer's instructions, by qualified personnel. All handling operations must be carried out with appropriate resources and qualified personnel

ATTENTION: Use intact and correctly dimensioned hoisting equipment, conforms to the local regulations and health and safety regulations. Do not stand under lifted loads.

If the product must be stored, avoid humid and corrosive places. Observe the temperatures stated in the burner data table at the beginning of this manual. The packages containing the burners must be locked inside the means of transport in such a way as to guarantee the absence of dangerous movements and avoid any possible damage.

In case of storage, the burners must be stored inside their packaging, in storerooms protected from the weather. Avoid humid or corrosive places and respect the temperatures indicated in the burner data table at the beginning of this manual.

Packing

The burners are despatched in wooden crates whose dimensions are:

- **9xA series: 1672mm x 1072mm x 1016mm (L x P x H)**
- **5xxA series: 1886mm x 1456mm x 1120mm (L x P x H)**

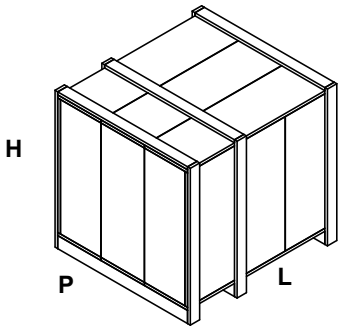

Packing cases of this type are affected by humidity and are not suitable for stacking.

The following are placed in each packing case:

- burner with detached gas train;
- gasket or ceramic fibre plait (according to burner type) to be inserted between the burner and the boiler;
- envelope containing this manual and other documents.

To get rid of the burner's packing, follow the procedures laid down by current laws on disposal of materials.

Handling the burner

WARNING! The handling operations must be carried out by specialised and trained personnel. If these operations are not carried out correctly, the residual risk for the burner to overturn and fall down still persists. To move the burner, use means suitable to support its weight (see paragraph "Technical specifications").
The unpacked burner must be lifted and moved only by means of a fork lift truck.

The burner is mounted on a support provided for handling the burner by means of a fork lift truck: the forks must be inserted into the A anb B ways. Remove the stirrup only once the burner is installed to the boiler.

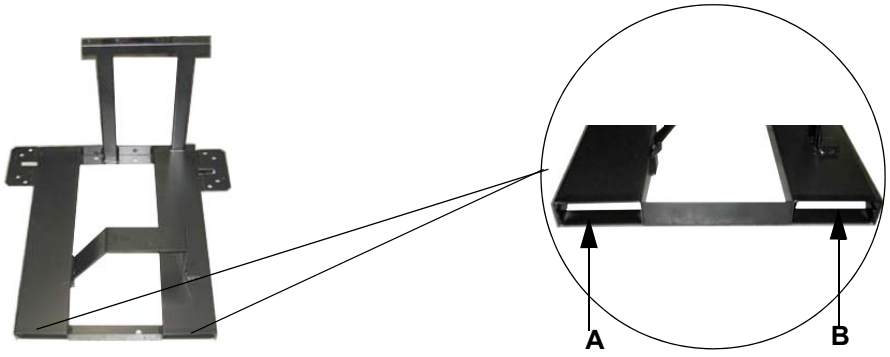

Fitting the burner to the boiler

To install the burner into the boiler, proceed as follows:

1 make a hole on the closing door of the combustion chamber as described on paragraph “Overall dimensions”)
2 place the burner to the boiler: lift it up and handle it according to the procedure described on paragraph “Handling the burner”;
3 place the 4 stud bolts (5) on boiler’s door, according to the burner drilling template described on paragraph “Overall dimensions”;
4 fasten the 4 stud bolts;
5 place the gasket on the burner flange;
6 install the burner into the boiler;
7 fix the burner to the stud bolts, by means of the fixing nuts, according to the next picture.
8 After fitting the burner to the boiler, ensure that the gap between the blast tube and the refractory lining is sealed with appropriate insulating material (ceramic fibre cord or refractory cement).

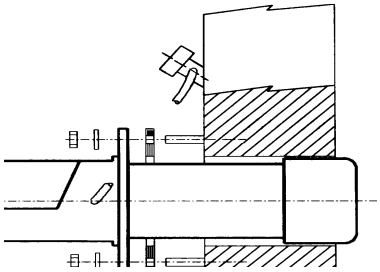

Keys
1 Burner
2 Fixing nut
3 Washer
4 Sealing gasket
5 Stud bolt
7 Blast tube

Matching the burner to the boiler

The burners described in this manual have been tested with combustion chambers that comply with EN676 regulation and whose dimensions are described in the diagram . In case the burner must be coupled with boilers with a combustion chamber smaller in diameter or shorter than those described in the diagram, please contact the supplier, to verify that a correct matching is possible, with respect of the application involved. To correctly match the burner to the boiler verify the type of the blast tube . Verify the necessary input and the pressure in combustion chamber are included in the burner performance curve; otherwise the choice of the burner must be revised consulting the burner manufacturer. To choose the blast tube lenght follow the instructions of the boiler manufacturer. In absence of these consider the following:

- Cast-iron boilers, three pass flue boilers (with the first pass in the rear part): the blast tube must protrude no more than **Dist** = 100 mm into the combustion chamber. (please see the picture below)
- Pressurised boilers with flame reversal: in this case the blast tube must penetrate **Dm** 50 ÷ 100 mm into combustion chamber in respect to the tube bundle plate.(please see the picture below)

A: ceramic fibre
B: refractory wall

Dist. = 100 mm
DM = 50 ÷ 100 mm

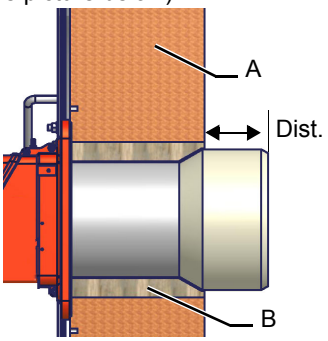

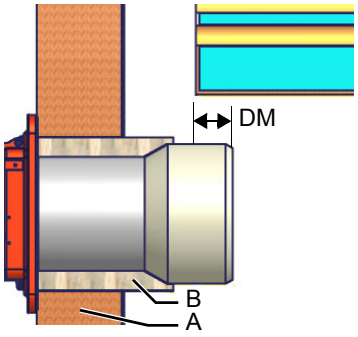

WARNING! Carefully seal the free space between blast tube and the refractory lining with ceramic fibre rope or other suitable means.

The length of the blast tubes does not always allow this requirement to be met, and thus it may be necessary to use a suitably-sized spacer to move the burner backwards or to design a blast tube tha suites the utilisation (please, contact the manifacturer).

GAS TRAIN CONNECTIONS

The diagrams show the components of the gas trai included in the delivery and which must be fitted by the installer.The diagrams are in compliance with the current laws.

Gas train with valves group VGD and MBE with built-in gas pressure governor + gas leakage pressure switch (PGCP)

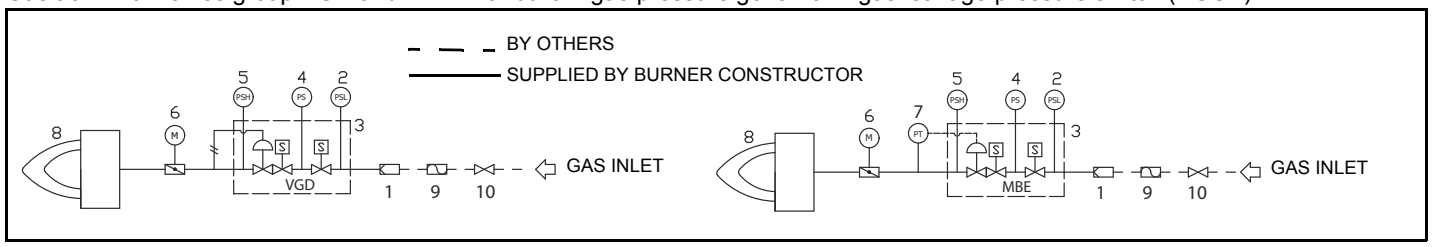

Legend

1	Filter	6	Butterfly valve
2	Pressure switch - PGMIN	7	Pressure transducer
3	Safety valve with built in gas governor	8	Main burner
4	Proving system pressure switch - PGCP	9	Antivibration joint (*optional)
5	Pressure switch PGMAX: mandatory for MBE, optional for VGD and MB-DLE	10	Manual valve(*optional)

GAS TRAIN CONNECTIONS

The diagrams show the components of the gas train included in the delivery and which must be fitted by the installer.The diagrams are in compliance with the current laws.

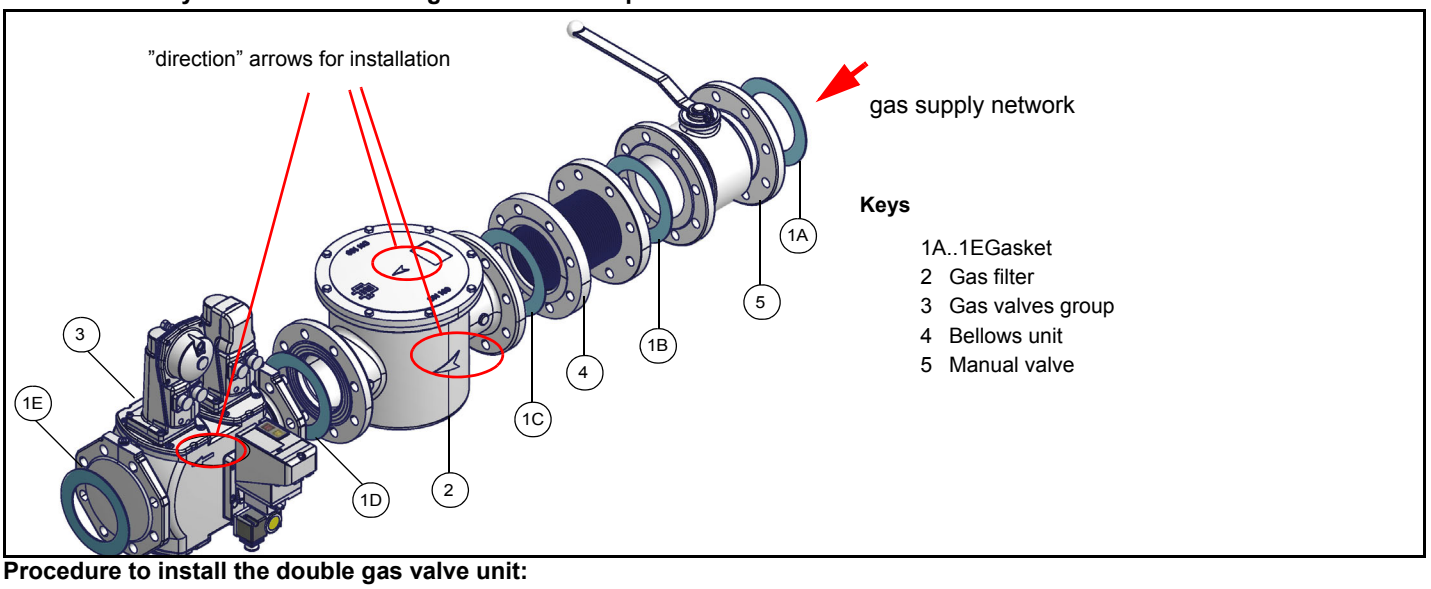

Procedure to install the double gas valve unit:

- **two (2) gas flanges are required; they may be threaded or flanged depending on size**
- **first step: install the flanges to prevent entry of foreign bodies in the gas line**
- **on the gas pipe, clean the already assembled parts and then install the valve unit**
- **check gas flow direction: it must follow the arrow on the valve body**
- **VGD20: make sure the O-rings are correctly positioned between the flanges and the valve**
- **VGD40 and MBE: make sure the gaskets are correctly positioned between the flange**
- **fasten all the components with screws, according to the following diagrams**
- **make sure bolts on the flanges are properly tightened**

WARNING: before executing the connections to the gas pipe network, be sure that the manual cutoff valves are closed.

ATTENTION: it is recommended to mount filter and gas valves to avoid that extraneous material drops inside the valves, during maintenance and cleaning operation of the filters (both the filters outside the valves group and the ones built-in the gas valves).

ATTENTION: once the gas train is mounted, the gas proving test must be performed, according to the procedure set by laws in force.

To mount the gas train, proceed as follows:

-

1 In case of threaded joints: use proper seals according to the gas used- in case of flanged joints: place a gasket between the elements

2 Fasten all the items by means of screws, according to the diagrams showed, observing the mounting direction for each item

NOTE: the bellows unit, the manual cutoff valve and the gaskets are not part of the standard supply

MultiBloc MBE

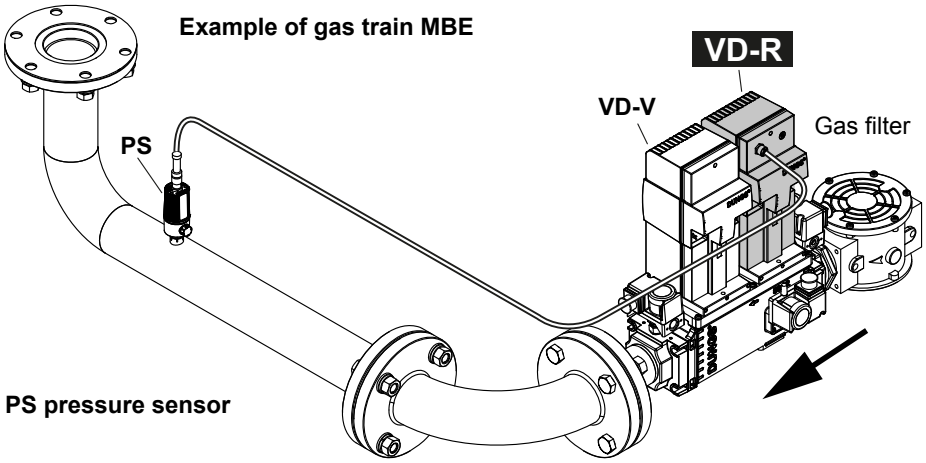

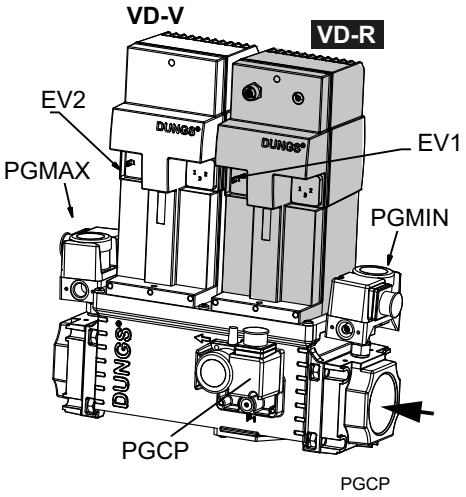

ATTENTION: once the gas train is mounted according, the gas proving test mus be performed, according to the procedure set by the laws in force.

ATTENTION: it is recommended to mount filter and gas valves to avoid that extraneous material drops inside the valves, during maintenance and cleaning operation of the filters (both the filters outside the valves group and the ones built-in the gas valves).

WARNING: Slowly open the fuel cock to avoid breaking the pressure regulator.

Threaded train with MultiBloc MBE - Mounting

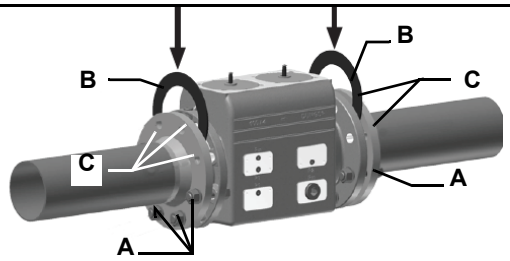

1. Insert studs A.
2. Insert seals B.
3. Insert studs C.
4. Tighten studs in accordance with section 8.

Ensure correct position of the seal!

5. Perform leak and functional tests after mounting.
6. Screws (4xM5x20) for VD assembly are supplied.

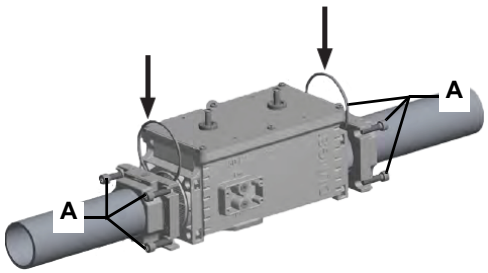

1. Mount flange into pipe systems. Use appropriate sealing agent.
2. Insert VB together with supplied O-rings.
Check current position of O-rings.
3. Tighten supplied screws (8xM8x30) in accordance with section 8.
4. Screws (4xM5x25) for VD assembly are supplied.
5. After installation, perform leakage and functional test.
6. Disassembly in reverse order.

Mounting position MBE / VB / VD

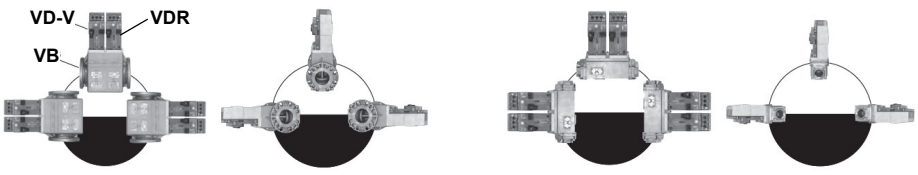

Mounting VD-R & PS-...

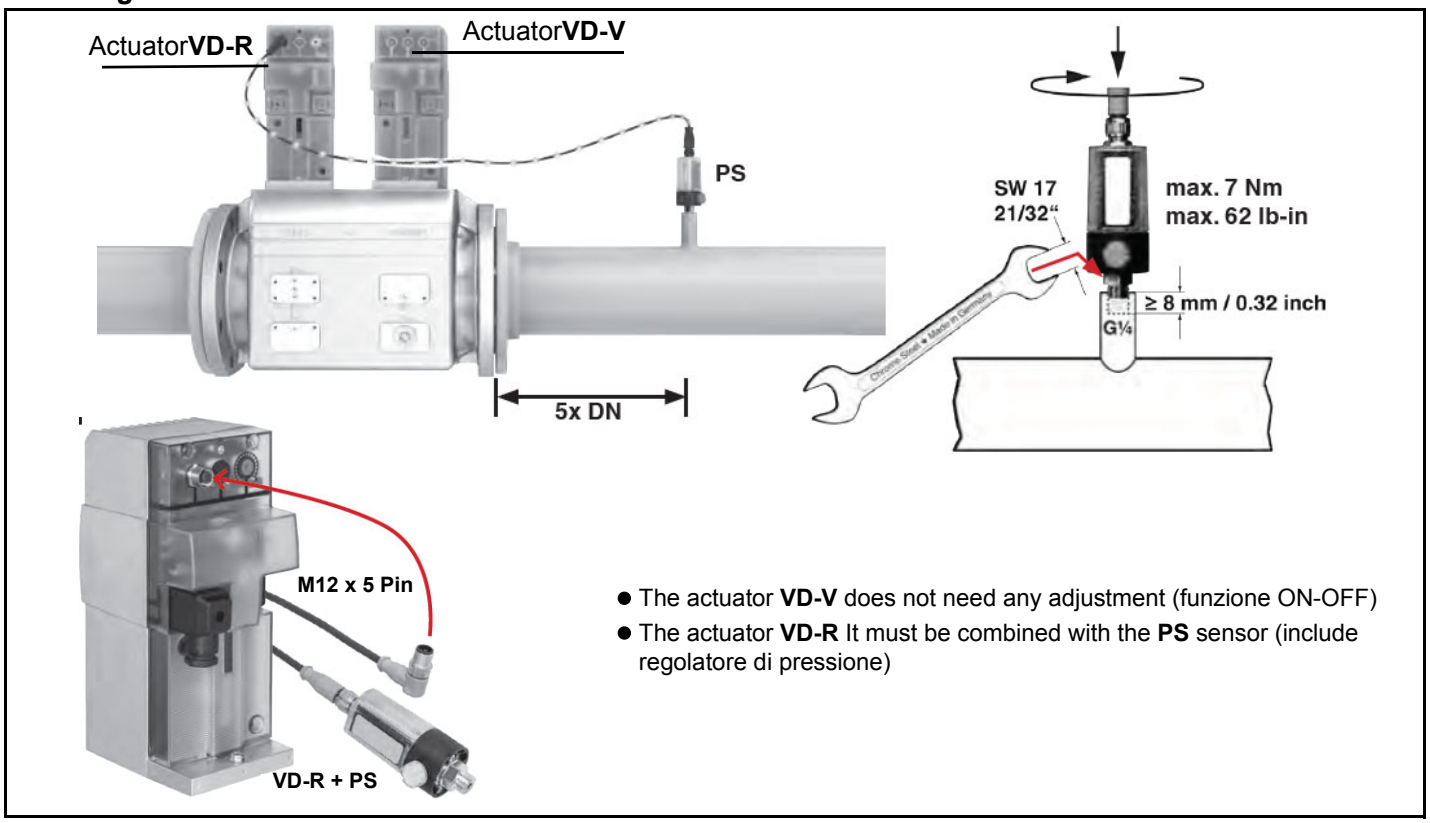

- The actuator **VD-V** does not need any adjustment (funzione ON-OFF)
- The actuator **VD-R** It must be combined with the **PS** sensor (include regolatore di pressione)

1. Gas pressure regulation is possible with VD-R and PS pressure sensor only.
WARNING! For US/CN installation, the output pressure must be monitoried by min. and max. pressure switches set to +/- 20% of the setpoint.
2. Mounting on pipe. Sensor position: 5x DN according to MBE. Pipe fitting with female thread size ¼, mount sensor with seal, observe torque.
3. The pressure sensor includes a vent limiter according to UL 353 and ANSI Z21.18/CSA 6.3. No venting required in locations where vent limiters are accepted by the jurisdiction.
4. Only PS pressure sensors specified by DUNGS are authorised to be connected to the VD-R‘s M12 interface.
5. Only PS cables specified by DUNGS are authorised to be used to connect the PS to the VD-R. Max. cable length 3 m.

Siemens VGD20.. e VGD40..

Siemens VGD20.. and VGD40.. gas valves - with SKP2.. (pressure governor)

- Connect the reference gas pipe (**TP** in figure; 8mm-external size pipe supplied loose), to the gas pressure nipples placed on the gas pipe, downstream the gas valves: gas pressure must be measured at a distance that must be at least 5 times the pipe size.
- Leave the blowhole free (**SA** in figure). Should the spring fitted not permit satisfactory regulation, ask one of our service centres for a suitable replacement.

Caution: the SKP2 diaphragm D must be vertical

WARNING: removing the four screws BS causes the device to be unserviceable!

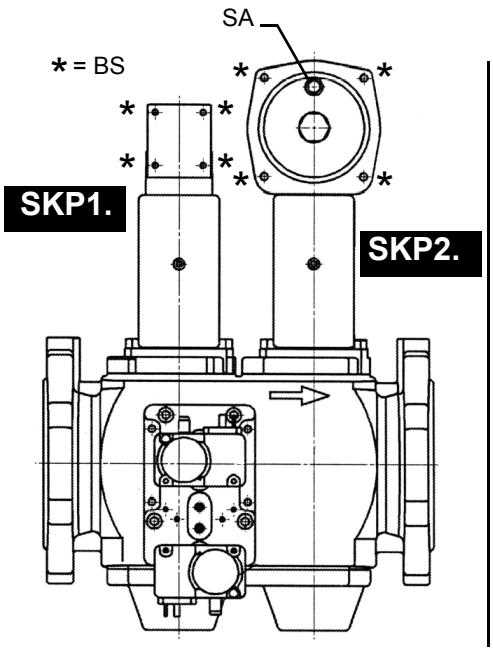

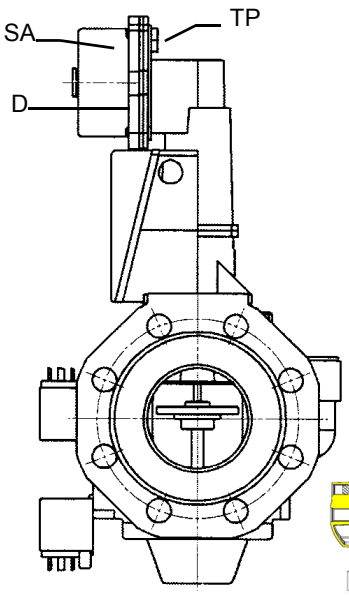

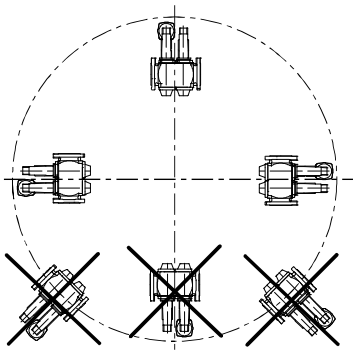

SIEMENS VGD..
Mounting positions

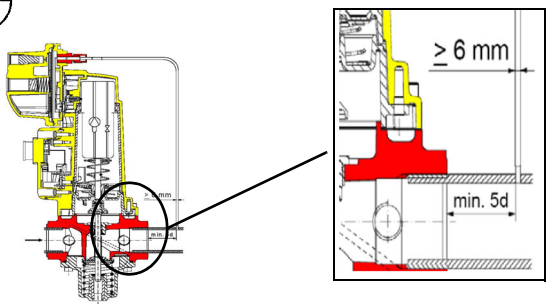

version with SKP2 (built-in pressure stabilizer)

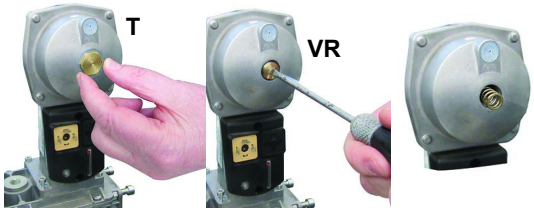

Performance range (mbar)			
	neutral	**yellow**	**red**
Spring colour SKP 25.0	0 ÷ 22	15 ÷ 120	100 ÷ 250
Spring colour SKP 25.4		7 ÷ 700	150 ÷ 1500

Siemens VGD valves with SKP actuator:

The pressure adjusting range, upstream the gas valves group, changes according to the spring provided with the valve group.

To replace the spring supplied with the valve group, proceed as follows:

- Remove the cap (T)
- Unscrew the adjusting screw (VR) with a screwdriver
- Replace the spring

Stick the adhesive label for spring identification on the type plate.

Gas valveGas Filter (if provided)

The gas filters remove the dust particles that are present in the gas, and prevent the elements at risk (e.g.: burner valves, counters and regulators) from becoming rapidly blocked. The filter is normally installed upstream from all the control and on-off devices.

ATTENTION: it is reccomended to install the filter with gas flow parallel to the floor in order to prevent dust fall on the safety valve during maintenance operation.

Once the train is installed, connect the gas valves group and pressure switches plugs.

Integrated proving system (burners equipped with LME7x, LMV, LDU)

This paragraph describes the integrated proving system operation sequence:

- At the beginning both the valves (EV1 and EV2) must be closed.
- Test space evacuating: EV2 valve (burner side) opens and keep this position for a preset time (td4), in order the bring the test space to ambient pressure.Test atmospheric pressure: EV2 closes and keep this position for a preset time (test time td1). The pressure switch PGCP has not to detect a rise of pressure.
- Test space filling: EV1 opens and keep this position for a preset time (td3), in order to fill the test space.
- Test gas pressure: EV1 closes and keep this position for a preset time (td2). The pressure switch PGCP has not to detect a pressure drop down.

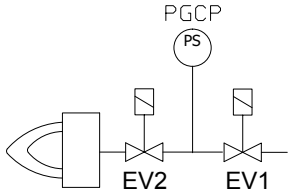

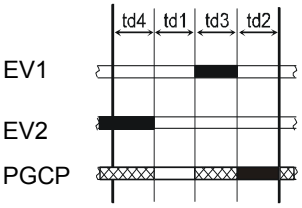

If all of the test phases are passed the proving system test is successful, if not a burner lockout happens.

On LMV5x and LMV2x/3x and LME73 (except LME73.831BC), the valve proving can be parameterized to take place on startup, shutdown, or both. On LME73.831BC the valve proving is parameterized to take place on startup only.

ELECTRICAL CONNECTIONS

WARNING! Respect the basic safety rules. make sure of the connection to the earthing system. do not reverse the phase and neutral connections. fit a differential thermal magnet switch adequate for connection to the mains.

WARNING! before executing the electrical connections, pay attention to turn the plant's switch to OFF and be sure that the burner's main switch is in 0 position (OFF) too. Read carefully the chapter "WARNINGS", and the "Electrical connections" section.

ATTENTION: Connecting electrical supply wires to the burner teminal block MA, be sure that the ground wire is longer than phase and neutral ones.

To execute the electrical connections, proceed as follows:

1 remove the cover from the electrical board, unscrewing the fixing screws;
2 execute the electrical connections to the supply terminal board as shown in the attached wiring diagrams;
3 check the direction of the fan motor (see next paragraph);
4 refit the panel cover.
5

WARNING: (only for double stage and progressive burners) The burner is provided with an electrical bridge between terminals 6 and 7; when connecting the high/low flame thermostat, remove this bridge before connecting the thermostat.

Rotation of electric motor

Once the electrical connection of the burner is executed, remember to check the rotation of the electric motor. The motor should rotate according to the "arrow" symbol on the body. In the event of wrong rotation, reverse the three-phase supply and check again the rotation of the motor.

CAUTION: check the motor thermal cut-out adjustment

NOTE: the burners are supplied for three-phase 380 V or 400 V supply, and in the case of three-phase 220 V or 230 V supply it is necessary to modify the electrical connections into the terminal box of the electric motor and replace the overload tripped relay.

Note on elecrtical supply

In the case where the power supply of the AUXILIARIES of the phase-phase burner (without a neutral), for the flame detection it is necessary to connect the RC circuit Siemens between the terminal 2 (terminal X3-04-4 in case of LMV2x, LMV3x, LMV5x, LME7x) of the base and the earth terminal, RC466890660. For LMV5 control box, please refer to the clabeling recommendations avaible on the Siemens CD attached to the burner

Key

C - Capacitor (22 nF , 250 V)
LME / LMV - Siemens control box
R - Resistor (1MΩ)
M: Terminal 2 (LGB, LME), Terminal X3-04-4 (LMV2x, LMV3x, LMV5, LME7x)
RC466890660 - RC Siemens filter

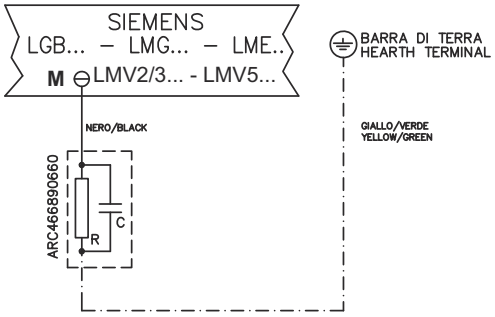

PART III: OPERATION

DANGER! Incorrect motor rotation can seriously damage property and injure people.WARNING: before starting the burner up, be sure that the manual cutoff valves are open and check that the pressure upstream the gas train complies the value quoted on paragraph "Technical specifications". Be sure that the mains switch is closed.

DANGER: During commissioning operations, do not let the burner operate with insufficient air flow (danger of formation of carbon monoxide); if this should happen, make the gas decrease slowly until the normal combustion values are achieved.WARNING: never loose the sealed screws! otherwise, the device warranty will be immediately invalidate!

LIMITATIONS OF USE

THE BURNER IS AN APPLIANCE DESIGNED AND CONSTRUCTED TO OPERATE ONLY AFTER BEING CORRECTLY CONNECTED TO A HEAT GENERATOR (E.G. BOILER, HOT AIR GENERATOR, FURNACE, ETC.), ANY OTHER USE IS TO BE CONSIDERED IMPROPER AND THEREFORE DANGEROUS.

THE USER MUST GUARANTEE THE CORRECT FITTING OF THE APPLIANCE, ENTRUSTING THE INSTALLATION OF IT TO QUALIFIED PERSONNEL AND HAVING THE FIRST COMMISSIONING OF IT CARRIED OUT BY A SERVICE CENTRE AUTHORISED BY THE COMPANY MANUFACTURING THE BURNER.

A FUNDAMENTAL FACTOR IN THIS RESPECT IS THE ELECTRICAL CONNECTION TO THE GENERATOR'S CONTROL AND SAFETY UNITS (CONTROL THERMOSTAT, SAFETY, ETC.) WHICH GUARANTEES CORRECT AND SAFE FUNCTIONING OF THE BURNER.

THEREFORE, ANY OPERATION OF THE APPLIANCE MUST BE PREVENTED WHICH DEPARTS FROM THE INSTALLATION OPERATIONS OR WHICH HAPPENS AFTER TOTAL OR PARTIAL TAMPERING WITH THESE (E.G. DISCONNECTION, EVEN PARTIAL, OF THE ELECTRICAL LEADS, OPENING THE GENERATOR DOOR, DISMANTLING OF PART OF THE BURNER).

NEVER OPEN OR DISMANTLE ANY COMPONENT OF THE MACHINE EXCEPT FOR ITS MAINTENANCE.

TO SECURE THE MACHINE, ACT ON THE ISOLATOR SWITCH. IN CASE OF ANOMALIES THAT REQUIRED A SHUT DOWN OF THE BURNER, IT'S POSSIBLE TO ACT ON THE AUXILIARY LINE SWITCH, LOCATED ON THE BURNER FRONT PANEL.

IN CASE OF A BURNER SHUT-DOWN, RESET THE CONTROL BOX BY MEANS OF THE RESET PUSHBUTTON. IF A SECOND SHUT-DOWN TAKES PLACE, CALL THE TECHNICAL SERVICE, WITHOUT TRYING TO RESET FURTHER.

WARNING: DURING NORMAL OPERATION THE PARTS OF THE BURNER NEAREST TO THE GENERATOR (COUPLING FLANGE) CAN BECOME VERY HOT, AVOID TOUCHING THEM SO AS NOT TO GET BURNT.

- BURNER FRONT PANEL

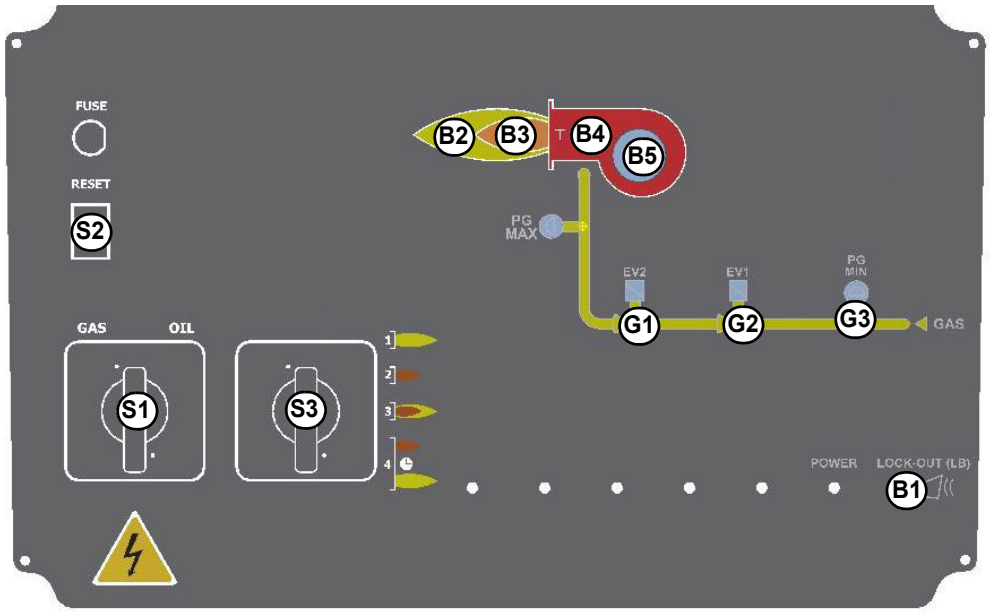

A1

Keys

B1	Lock-out LED	G1	"EV2 opening" LED	S3	Operation selector MAN - AUTO (operation in manual or automatic mode): MIN = operation with min output MAX = operation at the max output
B2	Hi-flame operation LED	G2	"EV1 opening" LED	A1	Burner Modulator (only on fully modulating burners)
B3	Lo-flame operation LED	G3	"Gas pressure switch signal " LED		
B4	"Ignition transformer operation" LED	S1	Main switch		
B5	"Fan motor overload tripped" LED	S2	Reset pushbutton for control box		

Gas operation

- Check the gas feeding pressure is sufficient (signalling lamp **G3** on).
- **Burners fitted with gas proving system:** the gas proving system test begins; when the test is performed the proving system LED turns on. At the end of the test, the burner staring cycle begins: in case of leakage in a valve, the gas proving system stops the burner and the lamp **B1** turns on.

NOTE: if the burner is fitted with Dungs VPS504, the pre-purgue phase starts once the gas proving system is successfully performed. Since the pre-purgue phase must be carried out with the maximum air rate, the control box drives the actuator opening and when the maximum opening position is achieved, the pre-purge time counting starts.

- At the end of the pre-purge time, the actuator drives the complete closing (ignition with gas position) and, as this is achieved the ignition transformer is energised (LED **B4** is on); the gas valves open.
- Few seconds after the valves opening, the transformer is de-energised and lamp **B4** turns off.
- The burner is now operating, meanwhile the actuator goes to the high flame position and, after some seconds, the two-stage operation begins; the burner is driven automatically to high flame or low flame, according to the plant requirements.

Operation in high or low flame is signalled by lamp **B2** on the frontal panel.

AIR FLOW AND FUEL ADJUSTMENT

WARNING! During commissioning operations, do not let the burner operate with insufficient air flow (danger of formation of carbon monoxide); if this should happen, make the fuel decrease slowly until the normal combustion values are achieved.
WARNING! the combustion air excess must be adjusted according to the values in the following chart.

Recommended combustion parameters		
Fuel	Recommended (%) CO_2	Recommended (%) O_2
Natural gas	9 ÷ 10	3 ÷ 4.8
LPG	11 ÷ 12	2.8 ÷ 4.3

Adjustments - brief description

Adjust the air and gas flow rates at the maximum output (“high flame”) first, by means of the air damper and the adjusting cam respectively.

- Check that the combustion parameters are in the suggested limits.
- .Check the flow rate measuring it on the counter or, if it was not possible, verifying the combustion head pressure by means of a differential pressure gauge.
- Then, adjust the combustion values corresponding to the points between maximum and minimum: set the shape of the adjusting cam foil. The adjusting cam sets the air/gas ratio in those points, regulating the opening-closing of the throttle gas valve.
- Set, now, the low flame output, acting on the low flame microswitch of the actuator in order to avoid the low flame output increasing too much or that the flues temperature gets too low to cause condensation in the chimney.

Air and Gas Flow Rate Settings by means of Berger STM30../Siemens SQM40.. actuator

1 check the fan motor rotation.
2 Only for burners provided with **Multibloc MB-DLE gas valves:** before starting the burner up, set the slow opening. To set the slow opening, remove cover **T**, reverse it upside down and use it as a tool to rotate screw **VR**. Clockwise rotation reduces start flow rate, anticlockwise rotation increases it. Do not use a screwdriver on the screw **VR**!

Note: the screw **VSB** must be removed only in case of replacemente of the coil.

3 Before starting the burner up, drive the high flame actuator microswitch matching the low flame one (in order to let the burner operates at the lowest output) to safely achieve the high flame stage.
4 Start the burner up by means of the thermostat series and wait until the pre-purge time comes to an end and that the burner starts up;
5 drive the burner to high flame stage, by means fo the thermostat **TAB**.
6 Then move progressively the microswitch to higher values until it reaches the high flame position; always check the combustion values and eventually adjusting the gas by means of the valves group stabiliser.
7 go on adjusting air and gas flow rates: check, continuosly, the flue gas analisys, as to avoid combustion with little air; dose the air according to the gas flow rate change following the steps quoted below;

SQM40.265 Actuator cams

(RD) I High flame
(BU) II Stand-by
(OG) III Low flame
(YE) IV -
(BK) V-
(GN) VI Ignition

8 Drive the burner to high flame stage (please refer to the LMVx documentation attached to this manual).

9 To adjust the **air flow rate in the high flame stage**, loose the **RA** nut and screw **VRA** as to get the desired air flow rate: moving the rod **TR** towards the air damper shaft, the air damper opens and consequently the air flow rate increases, moving it far from the shaft the air damper closes and the air flow rate decreases.

Note: once the procedure is perfomed, be sure that the blocking nut **RA** is fasten. Do not change the position of the air damper rods.

10 If necessary, adjust the combustion head position (see the dedicated paragraph).

11 The air and gas rate are now adjusted at the maximum power stage, go on with the point to point adjustement on the **SV1** (FGR side) adjusting cam as to reach the minimum output point.

12 Procedere, ora, alla regolazione dei pressostati.Now adjust the pressure switches.

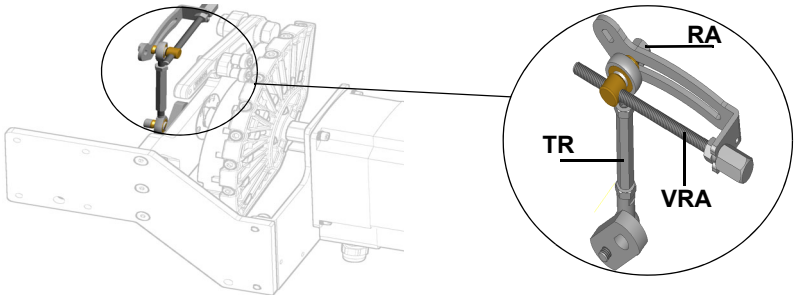

13 If necessary, adjust the combustion head position (see the dedicated paragraph)..

Attention! if it is necessary to change the head position, repeat the air and gas adjustments described above.

14 The air and gas rate are now adjusted at the maximum power stage, go on with the point to point adjustement on the **SV1** (gas side) adjusting cam as to reach the minimum output point.

15 as for the point-to-point regulation, move the gas low flame microswitch a little lower than the maximum position (90°);

16 set the **TAB** thermostat to the minimum in order that the actuator moves progressively towards the low flame position;

17 move the gas low flame microswitch to the minimum to move the actuator towards the low flame until the two bearings find the adjusting screw that refers to the lower position: screw **V1** to increase the rate, unscrew to decrease.

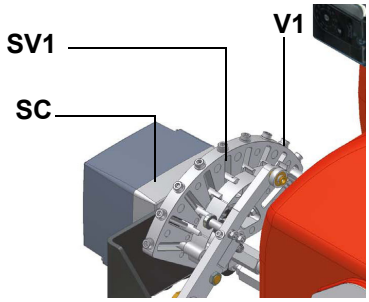

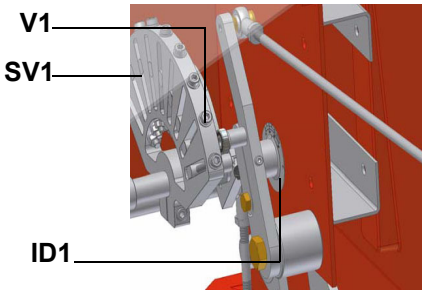

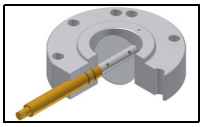

Gas throttle valve open

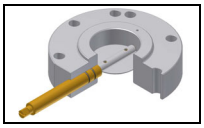

Gas throttle valve closed

18 Move again the gas low flame microswitch towards the minimum to meet the next screw on the adjusting cam and repeat the previous step; go on this way as to reach the desired low flame point.

19 Now adjust the pressure switches.

20

Fully-modulating burners

.To adjust the fully-modulating burners, use the **CMF** switch on the burner control panel (see next picture), instead of the **TAB** thermostat as described on the previous paragraphs about the progressive burners. Go on adjusting the burner as described before, paying attention to use the CMF switch intead of **TAB**.

The **CMF** position sets the oprating stages: to drive the burner to the high-flame stage, set CMF=1; to drive it to the low-flame stage, set CMF=2.

CMF

CMF = 0 stop at the current position
CMF = 1 high flame operation
CMF = 2 low flame operation
CMF = 3 automatic operation

21

MultiBloc MBE

Regulation VD-R whith PS

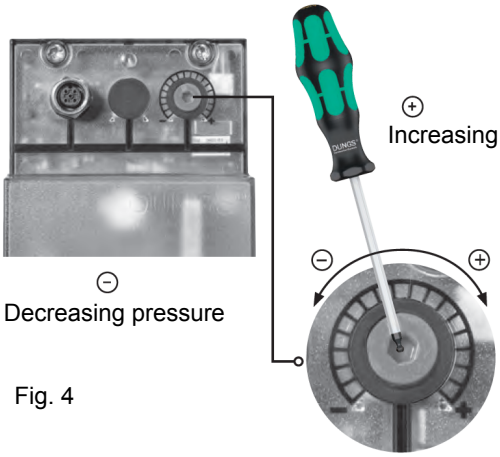

Fig. 4

Setting scale is „Not“ linear! Various sensors available. Output pressure according to sensor‘s measuring range.

Adjust the outlet pressure to the value specified by the burner or equipment manufacturer!

While making outlet pressure adjustments, do not exceed a value that creates a hazardous condition to the burner!

ATTENTION: To set the outlet pressure of the VD-R regulator, act on the adjustment ring nut (Fig. 10)

The position of the indicator in the dial indicates the value of the outlet pressure calculated as a percentage of the full scale of the PS sensor (Fig. 11)

Outlet pressure	MIN	10%	25%	50%	75%	MAX
PS-10/40	4 mbar 0,4 kPa 2 "w.c.	10 mbar 1,0 kPa 4 "w.c.	25 mbar 2,5 kPa 10 "w.c.	50 mbar 5,0 kPa 20 "w.c.	75 mbar 7,5 kPa 30 "w.c.	100 mbar 10,0 kPa 40 "w.c.
PS-50/200	20 mbar 2,0 kPa 8 "w.c.	50 mbar 5,0 kPa 20 "w.c.	125 mbar 12,5 kPa 50 "w.c.	250 mbar 25,0 kPa 100 "w.c.	375 mbar 37,5 kPa 150 "w.c.	500 mbar 50,0 kPa 200 "w.c.

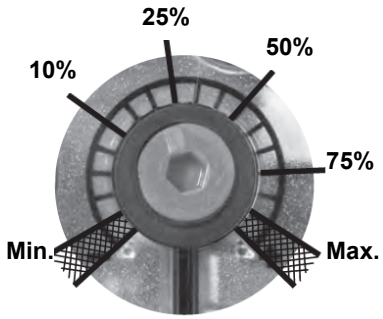

Fig. 5

Adjusting output pressure for positive pressure systems (requires PS-10/40 or PS-50/200):

Pressure taps MultiBloc MBE

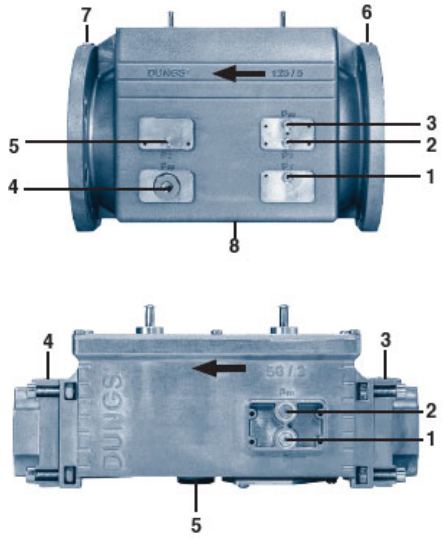

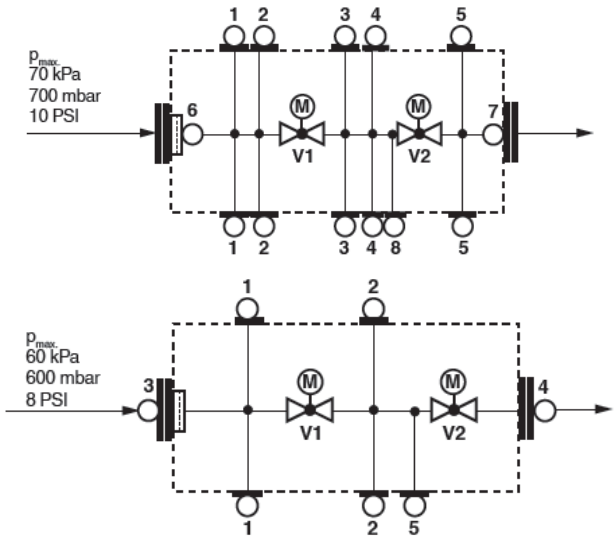

1, 2, 3, 5
Sealing plug

G ⅛ ISO 228

4
For system accessories

G ¾

Fig. 6

Gas valveversion with SKP2 (built-in pressure stabilizer)

To increase or decrease gas pressure, and therefore gas flow rate, remove the cap **T** and use a screwdriver to adjust the regulating screw **VR**. Turn clockwise to increase the flow rate, counterclockwise to reduce it.

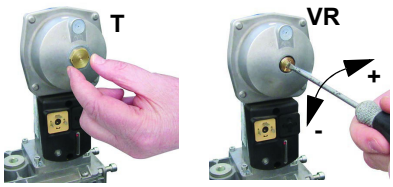

Calibration air and gas pressure switches

The **air pressure switch** locks the control box if the air pressure is not the one requested. If it happens, unlock the burner by means of the control box unlock pushbutton, placed on the burner control panel.

The **gas pressure switches** check the pressure to avoid the burner operate when the pressure value is not in the requested pressure range.

Calibration of low gas pressure switch

As for the gas pressure switch calibration, proceed as follows:

- Be sure that the filter is clean.
- Remove the transparent plastic cap.
- While the burner is operating at the maximum output, test the gas pressure on the pressure port of the minimum gas pressure switch.
- Slowly close the manual cutoff valve (placed upstream the pressure switch, see gas train installation diagram), until the detected pressure is reduced by 50%. Pay attention that the CO value in the flue gas does not increase: if the CO values are higher than the limits laid down by law, slowly open the cutoff valve as to get values lower than these limits.
- Check that the burner is operating correctly.
- Clockwise turn the pressure switch adjusting ring nut (as to increase the pressure value) until the burner stops.
- Slowly fully open the manual cutoff valve.
- Refit the transparent plastic cover on the pressure switch.

Calibration the maximum gas pressure switch (when provided)

To calibrate the maximum pressure switch, proceed as follows according to its mounting position:

- remove the pressure switch plastic cover;
- if the maximum pressure switch is mounted upstreaam the gas valves: measure the gas pressure in the network, when flame is off; by means of the adjusting ring nut **VR**, set the value read, increased by the 30%.
- if the maximum pressure switch is mounted downstream the “gas governor-gas valves” group and upstream the butterfly valve: light the burner, adjust it according to the procedure in the previous paragrph. Then, measure the gas pressure at the operating flow rate, downstream the “gas governor-gas valves” group and upstream the butterfly valve; by means of the adjusting ring nut **VR**, set the value read on step 2, increased by the 30%;
- replace the plastic cover.

Calibration of air pressure switch

To calibrate the air pressure switch, proceed as follows:

- Remove the transparent plastic cap.
- Once air and fuel setting have been accomplished, startup the burner.
- During the pre-purge phase o the operation, turn slowly the adjusting ring nut **VR** in the clockwise direction (to increase the adjusting pressure) until the burner lockout, then read the value on the pressure switch scale and set it to a value reduced by 15%.
- Repeat the ignition cycle of the burner and check it runs properly.
- Refit the transparent plastic cover on the pressure switch.

Calibration gas leakage pressure switch (PGCP)

- remove the pressure switch plastic cover;
- adjust the PGCP pressure switch to the same value set for the minimum gas pressure switch;
- replace the plastic cover.

Adjusting the combustion head

Attention! if it is necessary to change the head position, repeat the air and fuel adjustments described above.

Only if necessary, change the combusiton head position: to let the burner operate at a lower output, loose the **VB** screw and move progressively back the combustion head towards the MIN position, by turning clockwise the **VRT** ring nut. Fasten **VB** screw when the

adjustment is accomplished.

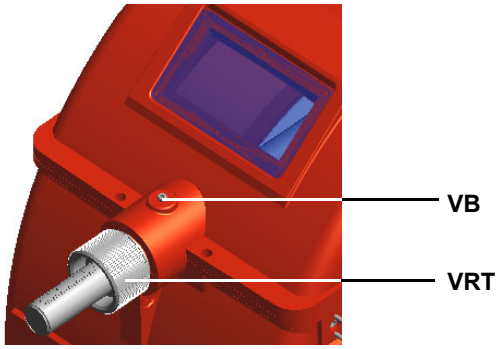

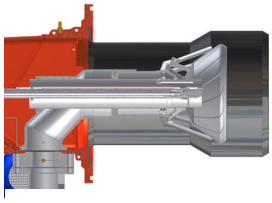

“MAX” head position

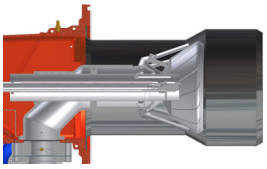

”MIN” head position

CAUTION: perform these adjustments once the burner is turned off and cooled.

Center head holes gas flow regulation (natural gas burners)To adjust the gas flow, partially close the holes, as follows:

1 loosen the three **V** screws that fix the adjusting plate **D**;
2 insert a screwdriver on the adjusting plate notches and let it move CW/CCW as to open/close the holes;
3 once the adjustmet is performed, fasten the **V** screws.

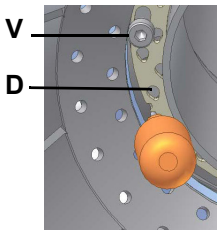

A: opened holes
B: closed holes

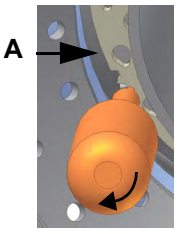

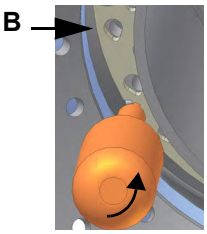

The adjusting plate correct position must be regulated in the plant during the commissioning.

The factory setting depends on the type of fuel for which the burner is designed:

- For natural gas burners, plate holes are fully opened

Center head holes gas flow regulation (LPG burners)

To adjust the gas flow, partially close the holes, as follows:

1 loosen the three **V** screws that fix the adjusting plate **D**;
2 insert a screwdriver on the adjusting plate notches and let it move CW/CCW as to open/close the holes;
3 once the adjustmet is performed, fasten the **V** screws.

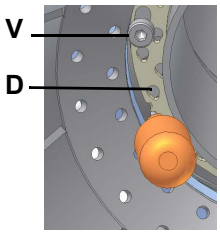

A: opened holes
B: closed holes

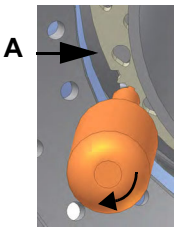

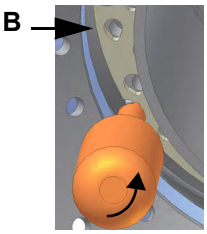

The adjusting plate correct position must be regulated in the plant during the commissioning.

The factory setting depends on the type of fuel for which the burner is designed:

- For LPG burners, plate holes are opened about:
  9xA **series**: 1,5 mm
  5xxA **series**: 1,3 mm

MultiBloc MBE*MultiBloc VD Mounting*

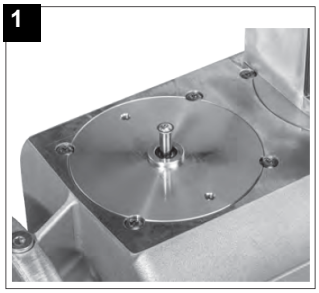

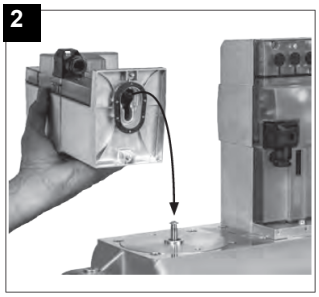

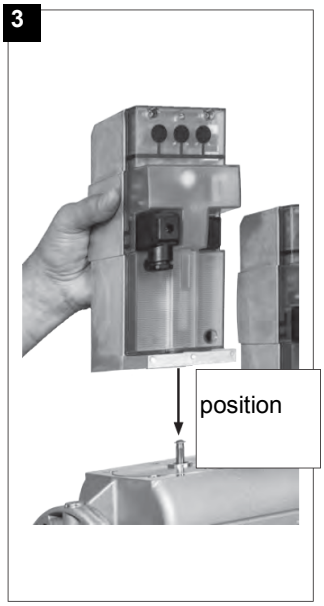

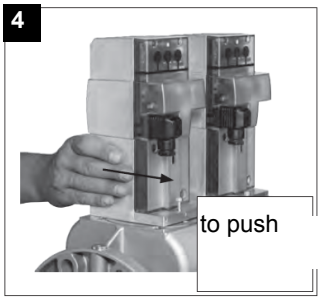

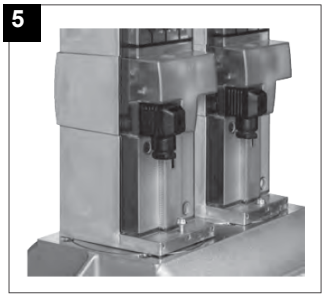

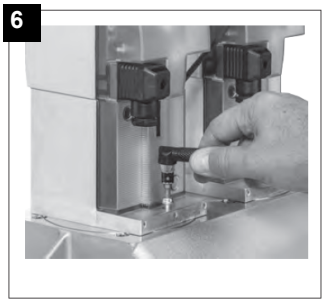

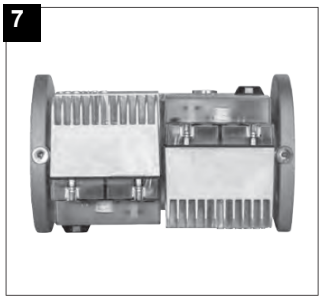

1. Position VD on VB, fig. 2+3.
2. Slide VD forward up to the stop, fig. 4.
3. Screw VD on with 2 M5 screws for each, max. 5 Nm/44 in.-lb., fig. 5/6.
4. VD can be mounted rotated by 180°, fig. 7.

PART IV: MAINTENANCE

At least once a year carry out the maintenance operations listed below. In the case of seasonal servicing, it is recommended to carry out the maintenance at the end of each heating season; in the case of continuous operation the maintenance is carried out every 6 months.

WARNING: ALL OPERATIONS ON THE BURNER MUST BE CARRIED OUT WITH THE MAINS DISCONNECTED AND THE FUEL MANAUL CUTOFF VALVES CLOSED!
ATTENTION: READ CAREFULLY THE "WARNINGS" CHAPTER AT THE BEGINNIG OF THIS MANUAL.

ROUTINE MAINTENANCE

- Clean and examine the gas filter cartridge and replace it if necesssary;
- Remove and clean the combustion head;
- Examine and clean the ignition electrodes, adjust and replace them if necessary;
- Examine and clean the detection electrode/photoelement (according to the burner models), replace it if necessary, in case of doubt, check the detection circuit, after the burner start-up;
- Clean and grease leverages and rotating parts.

DANGER! Incorrect motor rotation can seriously damage property and injure people.
ATTENTION: when servicing, if it was necessary to disassemble the gas train parts, remember to execute the gas proving test, once the gas train is reassembled, according to the procedure imposed by the law in force.

Gas filter maintenance

To clean or remove the filter, proceed as follows:

1 remove the cap unscrewing the fixing screws (A);
2 remove the filtering cartridge (B), clean it using water and soap, blow it with compressed air(or replace it, if necessary)
3 replace the cartridge in its proper position taking care to place it inbetween the guides as not to hamper the cap replacement;
4 be sure to replace the "O" ring into its place (C) and replace the cover fastening by the proper screws (A).

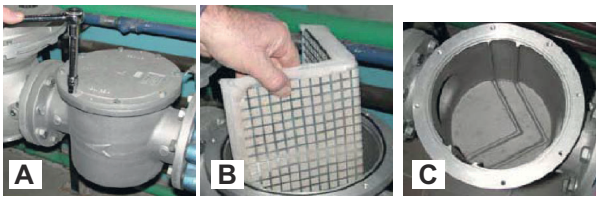

WARNING: Before opening the filter, close the manual cutoff valve downstream the filter and bleed the gas; check that inside the filter there is no pressurised gas.

Removing the combustion head

- Remove the cover **C**.
- Remove the electrodes cables;
- Unscrew the 3 screws **V** which hold in position the gas manifold **G**.
- Some models are provided with the **T** baffle. Move the gas manifold ahead and remove the baffle.
- Pull out the complete group as shown in the picture below.
- Clean the combustion head by a compressed air blow or, in case of scale, scrape it off by a scratchbrush.

Note: to replace the combustion head reverse the procedure described above having care to place correctly the O ring (**OR**) between burner and gas manifold.

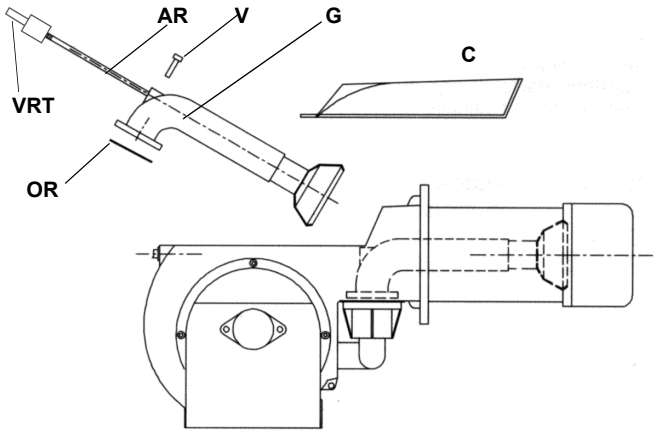

Key

VRT	Head adjusting screw
AR	Threaded rod
V	Fixing screw
G	Gas manifold
OR	”O” ring
C	Cover
T	Baffle

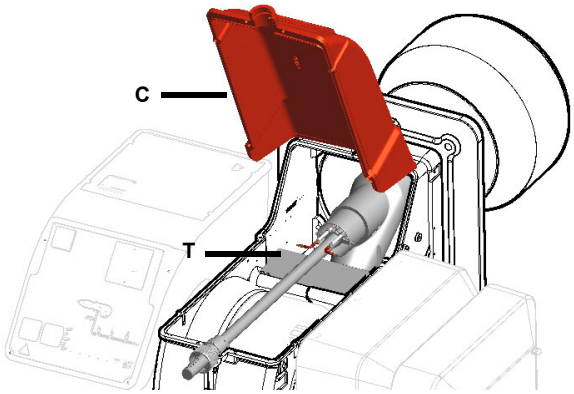

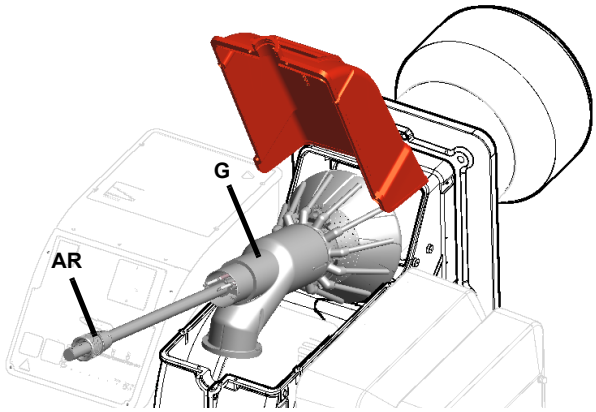

Electrodes Adjustment

Important Note: Check the ignition and detection electrodes after removing/adjusting the combustion head.

ATTENTION: avoid the ignition and detection electrodes to contact metallic parts (blast tube, head, etc.), otherwise the boiler's operation would be compromised. Check the electrodes position after any intervention on the combustion head.

Adjust the electrodes position, according to the quotes shown othe next picture

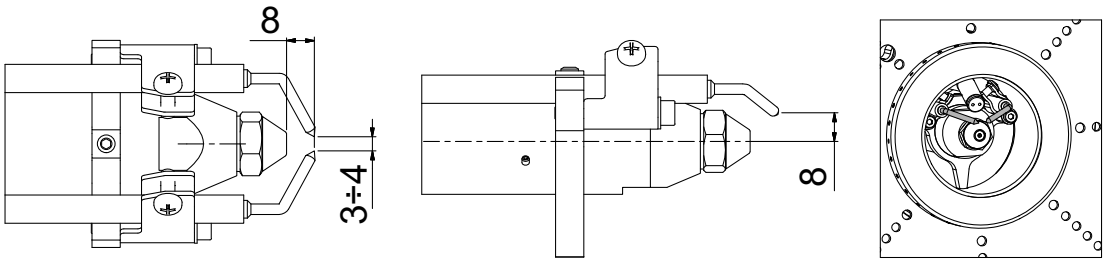

Fig. 7

Replacing the ignition electrodes

ATTENTION: avoid the ignition and detection electrodes to contact metallic parts (blast tube, head, etc.), otherwise the boiler's operation would be compromised. Check the electrodes position after any intervention on the combustion head.

To replace the ignition electrodes, proceed as follows:

1 remove the burner cover
2 loose the nuts that fasten the electrodes group to the combustion head (A);
3 disconnect the electrodes cables (B);
4 loose the security dowes of the adjusting ring nut (C);
5 shift the electrodes group back to the outside and remove the combustion head (D),
6 loose the screw of th eignition electrodes support (E);
7 remove the electrodes and replace them paying attention to the measures showed in figure (F-G).
8 reassemble the burner by fllowing the procedure in the reversed order.

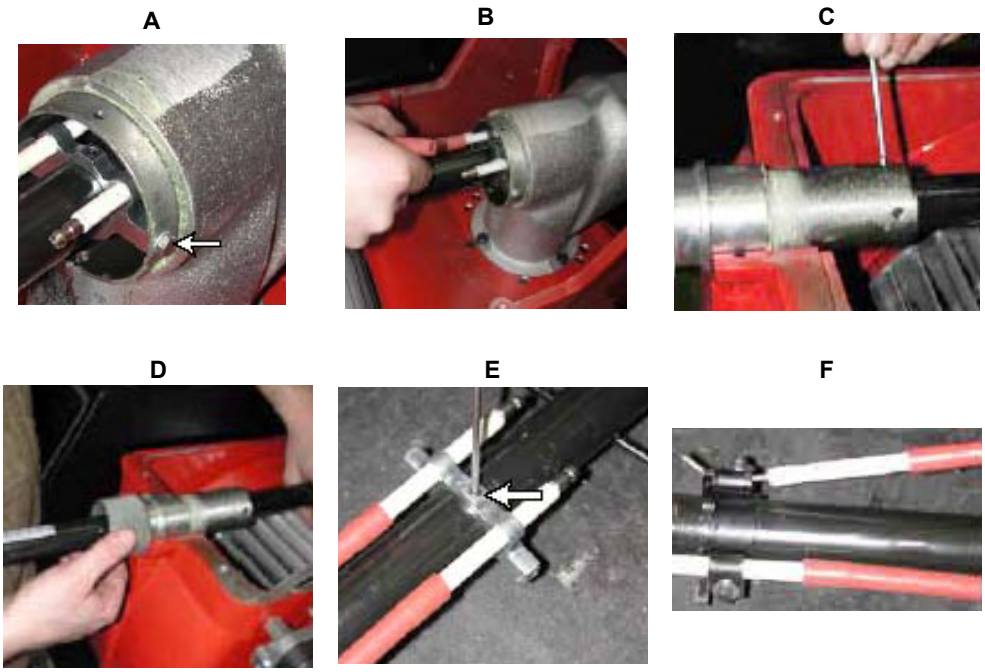

Replacing the detection electrode (natural gas burners)

ATTENTION: avoid the electrode to get in touch with metallic parts (blast tube, head, etc.), otherwise the boiler operation would be compromised. Check the electrode position after any intervention on the combustion head.

To replace the detection electrode, proceed as follows:

1 remove the combustion head according to the procedure on paragraph “Removing the combustion head”;
2 by means of an allen key, loose the fixing screws of the detection electrode **ER** and replace it;
3 replace the combustion head.

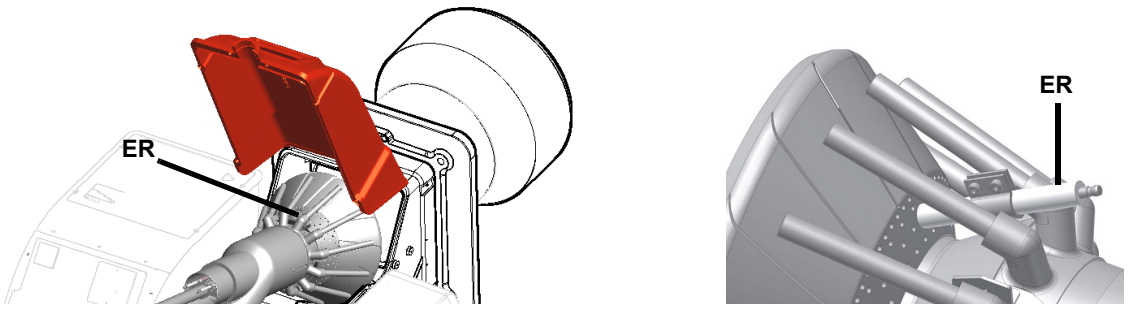

Checking the detection current with electrode (natural gas)

To check the detection signal follow the scheme in the picture below. If the signal is less than the value indicated, check the position of the detection electrode or detector, the electrical contacts and, if necessary, replace the electrode or the detector.

Control box	Minimum detection signal
Siemens LME7..	2µA (with electrode)

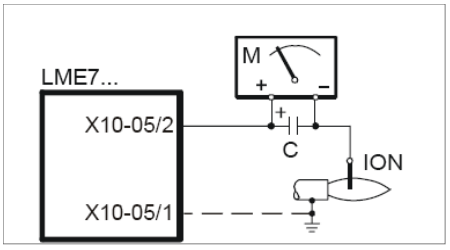

Fig. 8: Detection by electrode

Checking the detection current with photocell (LME) (L.P.G.)

To check the detection signal follow the scheme in the picture below. If the signal is less than the value indicated, check the position of the detection electrode or detector, the electrical contacts and, if necessary, replace the electrode or the detector.

Control box	Minimum detection signal
Siemens LME7...	70µA (with UV detector)

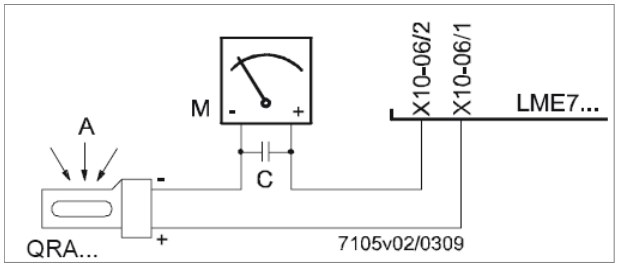

Fig. 9: Detection by photocell QRA..

Burner service term

- In optimal operating conditions, and with preventive maintenance, the burner can last up to 20 years.
- Upon expiry of the burner service term, it is necessary to carry out a technical diagnosis and, if necessary, an overall repair.
- The burner status is considered to be at its limit if it is technically impossible to continue using it due to non-compliance with safety requirements or a decrease in performance.
- The owner makes the decision whether to finish using the burner, or replacing and disposing of it based on the actual state of the appliance and any repair costs.
- The use of the burner for other purposes after the expiry of the terms of use is strictly prohibited.

Seasonal stop

To stop the burner in the seasonal stop, proceed as follows:

1 turn the burner main switch to 0 (Off position)
2 disconnect the power mains
3 close the fuel valve of the supply line

Burner disposal

In case of disposal, follow the instructions according to the laws in force in your country about the “Disposal of materials”.

WIRING DIAGRAMS

Refer to the attached wiring diagrams.

WARNING

1 - Electrical supply 230V / 400V 50Hz 3N a.c.
2 - Do not reverse phase with neutral
3 - Ensure burner is properly earthed

SPARE PARTS

Desription	Code						
	P91A	P92A	P93A	P512A	P515A	P520A	P525A
CONTROL BOX	2020448	2020448	2020448	2020448	2020448	2020448	2020448
INGNITION ELECTRODE	2080266	2080266	2080266	2080266	2080266	2080266	2080266
DETECTION ELECTRODE	2080107	2080107	2080107	2080118	2080118	2080118	2080118
GAS FILTER - Rp 2”	2090119	2090119	2090119	2090119	2090119	2090119	2090119
GAS FILTER - DN65	2090117	2090117	2090117	2090117	2090117	2090117	2090117
GAS FILTER - DN80	2090112	2090112	2090112	2090112	2090112	2090112	2090112
GAS FILTER - DN100	2090113	2090113	2090113	2090113	2090113	2090113	2090113
GASKET	2110048	2110048	2110048	2110047	2110047	2110047	2110047
FAN WHEEL	2150009	2150028	2150010	2150030	2150030	2150029	2150029
AIR PRESSURE SWITCH	2160065	2160065	2160065	2160065	2160065	2160065	2160065
MINIMUM GAS PRESSURE SWITCH- Rp2”	2160086	2160086	2160086	2160087	2160087	2160087	2160087
MINIMUM GAS PRESSURE SWITCH- DN65	2160076	2160076	2160076	2160077	2160077	2160089	2160089
MINIMUM GAS PRESSURE SWITCH- DN80	2160076	2160076	2160076	2160077	21600877	2160077	2160077
MINIMUM GAS PRESSURE SWITCH- DN100	2160076	2160076	2160076	2160076	2160076	2160076	2160077
IGNITION TRANSFORMER	2170302	2170302	2170302	2170302	2170302	2170302	2170302
MOTOR	2180276	2180277	2180206	2180298	2180209	2180278	2180289
GAS VALVE GROUP - Rp2” - Siemens VGD20..	2190171	2190171	2190171	2190171	2190171	2190171	2190171
GAS VALVE GROUP - DN65 - Siemens VGD40..	2190172	2190172	2190172	2190172	2190172	2190172	2190172
GAS VALVE GROUP - DN80 - Siemens VGD40..	2190169	2190169	2190169	2190169	2190169	2190169	2190169
GAS VALVE GROUP - DN100 - Siemens VGD40..	2190174	2190174	2190174	2190174	2190174	2190174	2190174
GAS VALVE ACTUATOR SKP15	2190181	2190181	2190181	2190181	2190181	2190181	2190181
GAS VALVE ACTUATOR SKP25	2190183	2190183	2190183	2190183	2190183	2190183	2190183
GAS VALVE GROUP - Rp2” - Dungs MBC1200SE	21903M5	21903M5	21903M5	21903M5	21903M5	21903M5	21903M5
GAS VALVE GROUP - DN65 - Dungs MBC1900SE	21903M6	21903M6	21903M6	21903M6	21903M6	21903M6	21903M6
GAS VALVE GROUP - DN80 - Dungs MBC3100SE	21903M7	21903M7	21903M7	21903M7	21903M7	21903M7	21903M7
GAS VALVE GROUP - DN100 - Dungs MBC5000SE	21903M8	21903M8	21903M8	21903M8	21903M8	21903M8	21903M8
GAS PROVING SYSTEM	2191604	2191604	2191604	2191604	2191604	2191604	2191604
ACTUATOR SIEMENS SQL33.03	2480007	2480007	2480007	2480007	2480007	2480007	2480007
ACTUATOR BERGER STM30/24	2480090	2480090	2480090	2480090	2480090	2480090	2480090
ACTUATOR SIEMENS SAM40	24800A5	24800A5	24800A5	24800A5	24800A5	24800A5	24800A5
BURNER MODULATOR	2570112	2570112	2570112	2570112	2570112	2570112	2570112
COMBUSTION HEAD	30600R3	30600R3	30600R3	30600R4	30600R5	30600R6	30600R6
BLAST TUBE	30900M3	30900M4	30900M6	3091075	3091076	30910H4	30910L9
INGNITION CABLE	6050108	6050108	6050108	6050108	6050108	6050108	6050108
DETECTION CABLE	6050215	6050215	6050215	6050215	6050215	6050215	6050215
PCB (PRINTED CIRCUIT BOARD)	6100533	6100533	6100533	6100533	6100533	6100533	6100533

NOTE: it is recommended to mention the burner ID number on the spare parts request form.

BURNER EXPLODED VIEW (P91A - P92A - P93A - P512A - P515A - P520A)

ITEM	DESCRIPTION
1	STANDARD BLAST TUBE
2.1	BOARD
2.2.1	OUTPUT MODULATOR
2.3	COVER
3.1	STANDARD COMBUSTION HEAD
3.2.1	IGNITION ELECTRODE
3.2.2	ADJUSTING BUSH
3.2.3	FALSE LANCE
3.3	IONISATION PROBE
3.4	O RING
3.5	RING NUT
3.6	GAS MANIFOLD
4.1	FAN WHEEL
4.2	MOTOR
5.1	THREADED PIPE
5.2	GAS FILTER
5.3	ELBOW
5.4	FLANGED PIPE
5.5.1	STRAIGHT UNION

ITEM	DESCRIPTION
5.5.2	ELBOW
5.5.3	NIPPLE
5.5.4	GAS PRESSURE
5.5.5	GAS VALVE HOUSING
5.5.6	"SKP" ACTUATOR
5.5.7	"SKP" ACTUATOR
5.5.8	GAS PROVING SYSTEM
5.5.9	BRACKET
6	AIR INLET CONE
7	BURNER HOUSING
7.1	COVER
8	GENERATOR GASKET
9	AIR PRESSURE SWITCH PIPE
10	PRESSURE PLUG
11	INSPECTION GLASS
12.1	THROTTLE
12.2	THROTTLE SHAFT
12.3	BUTTERFLY GAS VALVE
13	AIR PRESSURE SWITCH

ITEM	DESCRIPTION
14.1.1	SPACER
14.1.2	LEVERAGE
14.1.3	ADJUSTING CAM
14.1.4	ACTUATOR
14.1.5	BRACKET
14.2	NET
14.3	AIR INTAKE DAMPER
14.4	AIR INTAKE DAMPER
14.5	AIR INTAKE
14.6	LOUVER SHAFT
14.7	LOUVER SHAFT
15	CONNECTOR

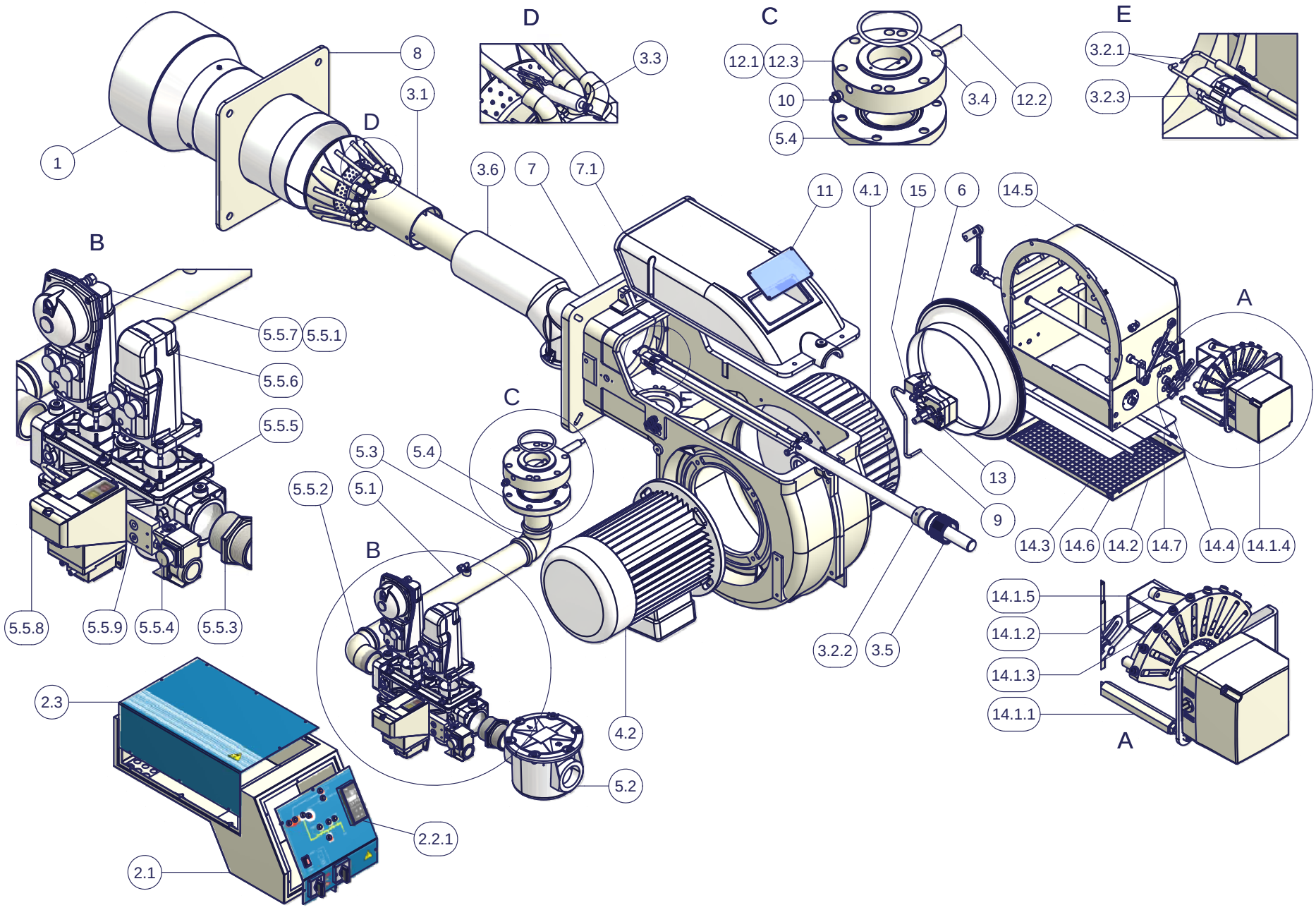
D
C
E
B
A
1
8
3.1
3.3
12.1
12.3
10
5.4
3.4
12.2
3.2.1
3.2.3
3.6
7
7.1
11
4.1
15
6
14.5
5.5.7
5.5.1
5.5.6
5.5.5
5.3
5.4
5.5.2
5.1
13
9
14.3
14.6
14.2
14.7
14.4
14.1.4
5.5.8
5.5.9
5.5.4
5.5.3
3.2.2
3.5
14.1.5
14.1.2
14.1.3
14.1.1
2.3
4.2
5.2
2.2.1
2.1

BURNER EXPLODED VIEW (P525A)

ELEM	DESCRIZIONE
1	STANDARD BLAST TUBE
2	BOARD
3	COVER
4	STANDARD COMBUSTION HEAD
5	OIL GUN HOLDER
6	BRACKET
7	IGNITION ELECTRODE
8	ADJUSTING BUSH
9	FALSE LANCE
10	DETECTION ELECTRODE
11	O RING
12	RING NUT
13	GAS MANIFOLD
14	FAN WHEEL
15	MOTOR
16	SPACER
17	LEVERAGE
18	ADJUSTING CAM
19	ACTUATOR

ELEM	DESCRIZIONE
20	BRACKET
21	NET
22	AIR INTAKE DAMPER
23	AIR INTAKE DAMPER
24	AIR INTAKE
25	LOUVER SHAFT
26	LOUVER SHAFT
27	GAS FILTER
28	GASKET
29	REVERSIBLE PIPE
30	FLANGED REVERSIBLE CURVE
31	GAS PRESSURE
32	GAS VALVE HOUSING
33	"SKP" ACTUATOR
34	"SKP" ACTUATOR
35	GAS PROVING SYSTEM
36	PIPE
37	AIR INLET CONE
38	BURNER HOUSING

ELEM	DESCRIZIONE
39	COVER
40	GENERATOR GASKET
41	AIR PRESSURE SWITCH PIPE
42	PRESSURE PLUG
43	INLET
44	SCREW
45	INSPECTION GLASS
46	THROTTLE
47	THROTTLE SHAFT
48	BUTTERFLY GAS VALVE
49	BRACKET
50	AIR PRESSURE SWITCH PIPE
51	AIR PRESSURE SWITCH
52	CONNECTOR

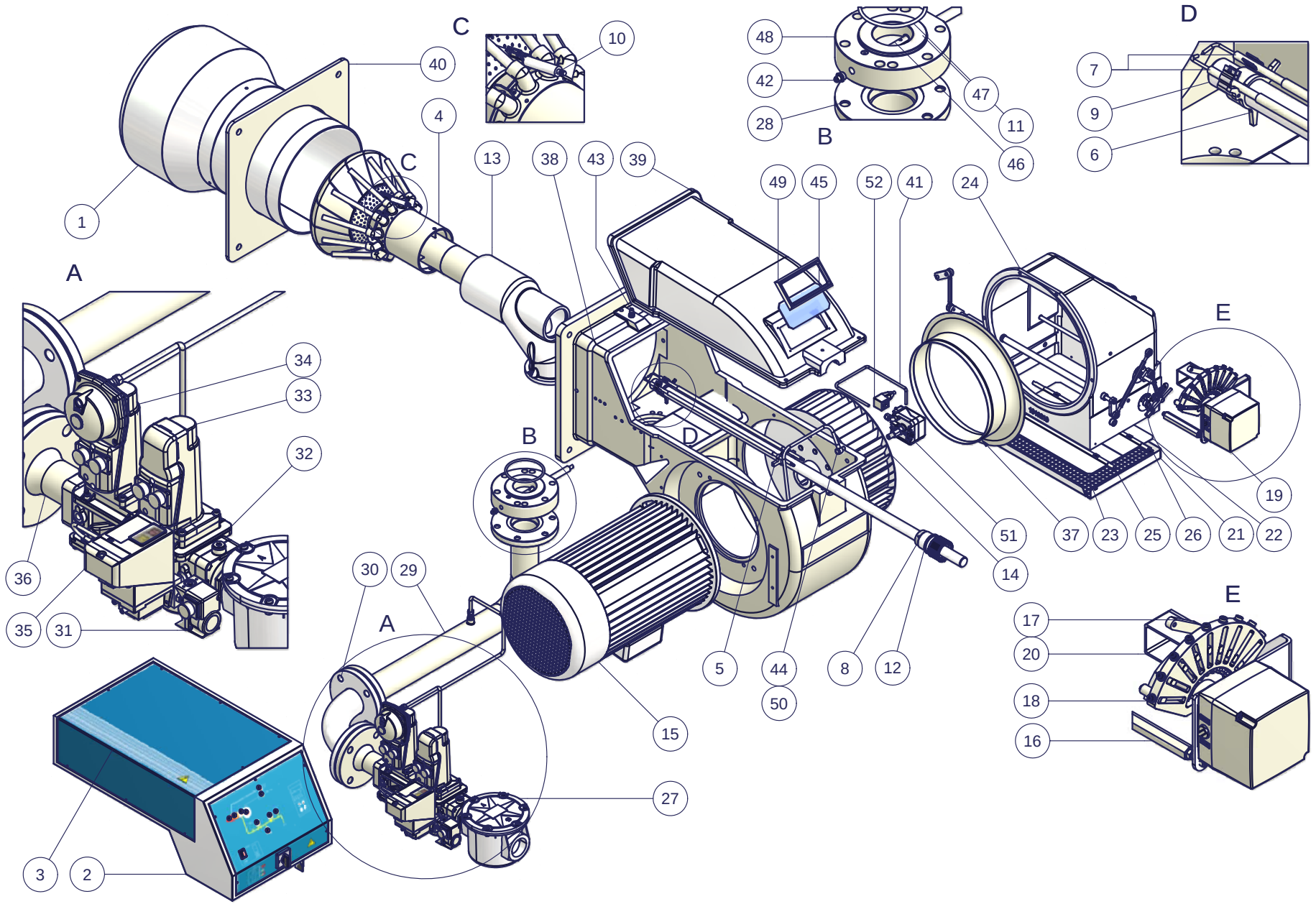
A
B
C
D
E
1
2
3
4
5
8
10
11
12
13
14
15
16
17
18
19
20
21
22
23
24
25
26
27
28
29
30
31
32
33
34
35
36
37
38
39
40
41
42
43
44
45
46
47
48
49
50
51
52
6
7
9

WIRING DIAGRAMS

BURNERS FITTED WITH PRINTED CIRCUIT

Wiring diagram SE21-018

Complete key SE21-018

CMF	MANUAL SWITCH 0)OFF 1)HIGH FLAME 2)LOW FLAME 3)AUTOMATIC
ER	FLAME DETECTION ELECTRODE
EV1	GAS ELECTRO-VALVE UPSTREAM (OR VALVES GROUP)
EV2	GAS ELECTRO-VALVE DOWNSTREAM (OR VALVES GROUP)
F1	AUXILIARY FUSE
F2	FAN MOTOR LINE FUSES
F3	LINE FUSE
FC	UV FLAME DETECTOR
IG	MAINS SWITCH
IL	AUXILIARY LINE SWITCH
KA1	AUXILIARY RELAY
KA2	AUXILIARY RELAY
KM1.1	FAN MOTOR CONTACTOR
LAF	BURNER IN HIGH FLAME INDICATOR LIGHT
LB	INDICATOR LIGHT FOR BURNER LOCK-OUT
LBF	BURNER IN LOW FLAME INDICATOR LIGHT
LEV1	INDICATOR LIGHT FOR OPENING OF ELECTRO-VALVE [EV1]
LEV2	INDICATOR LIGHT FOR OPENING OF ELECTRO-VALVE [EV2]
LPGMIN	INDICATOR LIGHT FOR PRESENCE OF GAS IN THE NETWORK
LS	INDICATOR LIGHT FOR BURNER STAND-BY
LSPG	INDICATOR LIGHT FOR LEAKAGE OF VALVES
LT	INDICATOR LIGHT FOR FAN OVERLOAD TRIPPED
LTA	IGNITION TRANSFORMER INDICATOR LIGHT
MV	FAN MOTOR
PA	COMBUSTION AIR PRESSURE SWITCH
PGMAX	MAXIMUM PRESSURE GAS SWITCH (OPTIONAL)
PGMIN	MINIMUM GAS PRESSURE SWITCH
PS	LOCK-OUT RESET BUTTON
PT100	TEMPERATURE PROBE
SD-0÷10V	TENSION SIGNAL
SD-0/4÷20mA	CURRENT SIGNAL
SD-PRESS	PRESSURE PROBE
SD-TEMP.	TEMPERATURE PROBE
SIEMENS LFL 1.3xx	CONTROL BOX
SIEMENS RWF40	BURNER MODULATOR
SQM/STM/SQL	AIR DAMPER ACTUATOR
ST	SERIES OF THERMOSTATS OR PRESSURE SWITCHES
TA	IGNITION TRANSFORMER
TAB	HIGH-LOW THERMOSTAT/PRESSURE SWITCHES (IF FITTED REMOVE THE BRIDGE BETWEEN TERMINALS 6 AND 7 ON TERMINAL BOARD MA)
TC	THERMOCOUPLE
TV	FAN MOTOR THERMAL
VPS504	GAS PROVING SYSTEM (OPTIONAL)

ATTENTION:

1- Power supply 400V 50 Hz, 3N a.c.

2- Don’t reverse phase with neutral

3- Ensure burner is properly hearted

WIRING DIAGRAM Cod. SE09-313 - Burners type P525A Mod. M-.PR...

WIRING DIAGRAM Cod. SE09-315 - Burners type P525A Mod. M-.MD...

TROUBLESHOOTNG GUIDE Gas operation

BURNER DOESN'T LIGHT	* No electric power supply	* Restore power supply
	* Main switch open	* Close switch
	* Thermostats open	* Check set points and thermostat connections
	* Bad thermostat set point or broken thermostat	* Reset or replace the thermostat
	* No gas pressure	* Restore gas pressure
	* Safety devices (manually operated safety thermostat, pressure switches and so on) open	* Restore safety devices; wait till boiler reaches operating temperature then check safety device functionality.
	* Broken fuses	* Replace fuses. Check current absorption
	* Fan thermal contacts open (three phases motors only)	* Reset contacts and check current absorption
	* Burner control lock out	* Reset and check its functionality
	* Burner control damaged	* Replace burner control
GAS LEAKAGE: BURNER LOCKS OUT (NO FLAME)	* Gas flow is too low	* Increase the gas flow * Check gas filter cleanness * Check butterfly valve opening when burner is starting (only Hi-Low flame and progressive)
	* Ignition electrodes discharge to ground because dirty or broken	* Clean or replace electrodes
	* Bad electrodes setting	* Check electrodes position referring to instruction manual
	* Electrical ignition cables damaged	* Replace cables
	* Bad position of cables in the ignition transformer or into the electrodes	* Improve the installation
	* Ignition transformer damaged	* Replace the transformer
BURNER LOCKS OUT WITH FLAME PRESENCE	* Bad flame detector set	
	* Flame detector damaged	* Replace or adjust flame detector
	* Bad cables of flame detector	* Check cables
	* Burner control damaged	* Replace burner control
	* Phase and neutral inverted	* Adjust connections
	* Ground missing or damaged	* Check ground continuity
	* Voltage on neutral	* Take off tension on neutral
	* Too small flame (due to not much gas)	* Adjust gas flow * Check gas filter cleanness
	* Too much combustion air	* Adjust air flow rate
only FOR LME22: BURNER CONTINUES TO PERFORM ALL ITS FEATURES WITHOUT IGNITING THE BURNER	* Air pressure switch damaged or bad links	* Check air pressure switch functions and links
	* Burner control damaged	* Replace burner control
BURNER LOCKS OUT WITHOUT ANY GAS FLOW	* Gas valves don't open	* Check voltage on valves; if necessary replace valve or the burner control * Check if the gas pressure is so high that the valve cannot open
	* Gas valves completely closed	* Open valves
	* Pressure governor too closed	* Adjust the pressure governor
	* Butterfly valve closed	* Open the butterfly valve
	* Maximum pressure switch open.	* Check connection and functionality
	* Air pressure switch doesn't close the NO contact	* Check connections * Check pressure switch functionality
THE BURNER IS BLOCKED AND THE EQUIPMENT PROVIDES A LOCK CODE "CAUSE AIR PRESSURE SWITCH FAULT"	* Air pressure switch damaged (it keeps the stand-by position or badly set)	* Check air pressure switch functionality * Reset air pressure switch
	* Air pressure switch connections wrong	* Check connections
	* Air fan damaged	* Replace motor
	* No power supply	* Reset power supply
	* Air damper too closed	* Adjust air damper position
BURNER LOCKS OUT DURING NORMAL RUNNING	* Flame detector circuit interrupted	* Check wiring * Check photocell
	* Burner control damaged	* Replace burner control
	* Maximum gas pressure switch damaged or badly set	* Reset pressure switch or replace it
THE BURNER STARTS AND AFTER A WHILE IT REPEATS THE STARTING CYCLE.	* Gas pressure switch badly set	* Reset the pressure switch
	* Gas filter dirty	* Clean gas filter
	* Gas governor too low or damaged	* Reset or replace the governor
BURNER STANDS WHILE RUNNING WITHOUT ANY SWITCHING OF THERMOSTATS	* Thermal contacts of fan motor open	* Reset contacts and check values * Check current absorption
FAN MOTOR DOESN'T START	* Internal motor wiring broken	* Replace wiring or complete motor
	* Fan motor starter broken	* Replace starter
	* Fuses broken (three phases only)	* Replace fuses and check current absorption
BURNER DOESN'T SWITCH TO HIGH FLAME	* Hi-low flame thermostat badly set or damaged	* Reset or replace thermostat
	* Servomotor cam badly set	* Reset servomotor cam
***mechanical only*: SOMETIMES THE SERVOMOTOR RUNS IN THE WRONG WAY**	* Servomotor capacitor damaged	* Replace capacitor

VERSIONE PROGRESSIVA "PR"

PROGRESSIVE "PR" VERSION

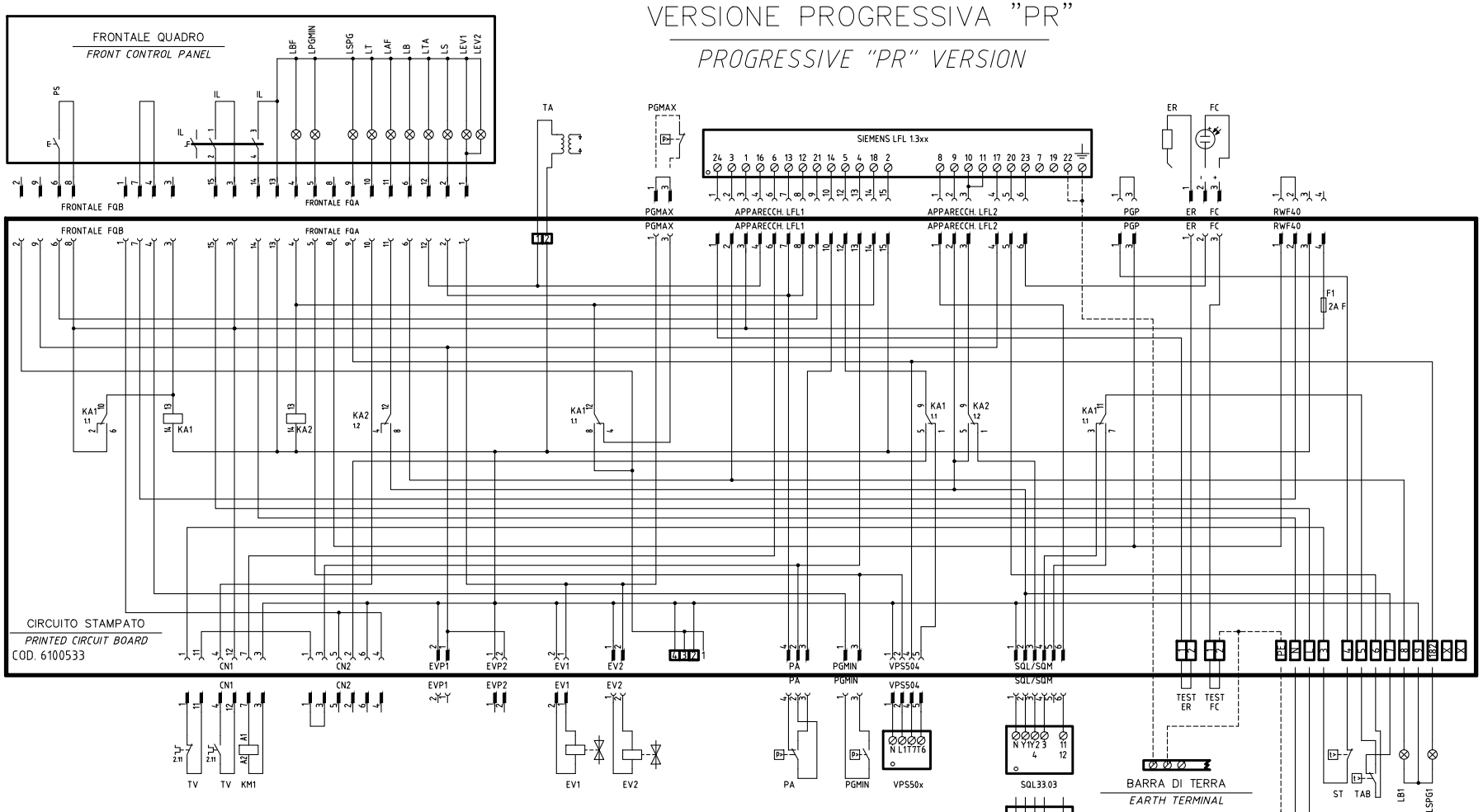

ALIMENTAZIONE AUSILIARI BRUCIATORE
BURNER AUXILIARY SUPPLY

VEDI FOGLIO [3]
SEE SHEET [3]

SERVOCOMANDO SERRANDA ARIA
AIR DAMPER ACTUATOR
SQL33.03

Y1	ALTA FIAMMA *HIGH FLAME*
Y2	SOSTA E ACCENSIONE *STAND-BY AND IGNITION*
3	BASSA FIAMMA GAS *GAS LOW FLAME*

SERVOCOMANDO SERRANDA ARIA (ALTERNATIVO)
AIR DAMPER ACTUATOR (ALTERNATIVE)
STM30/24Q15.51/641NLP

I	ALTA FIAMMA *HIGH FLAME*
II	SOSTA E ACCENSIONE *STAND-BY AND IGNITION*
III	BASSA FIAMMA GAS *GAS LOW FLAME*
IV	NON USATA *NOT USED*

SERVOCOMANDO SERRANDA ARIA (ALTERNATIVO)
AIR DAMPER ACTUATOR (ALTERNATIVE)
SQM40.265Axx

I	ALTA FIAMMA *HIGH FLAME*
II	SOSTA E ACCENSIONE *STAND-BY AND IGNITION*
III	BASSA FIAMMA GAS *GAS LOW FLAME*
IV	NON USATA *NOT USED*
V	NON USATA *NOT USED*
VI	NON USATA *NOT USED*

Data	01/10/2008	PREC.	FOGLIO
Revisione	03	/	1
Dis. N.	21 – 018	SEGUE	TOTALE
		2	3

VERSIONE MODULANTE "MD"

"MD" MODULATING VERSION

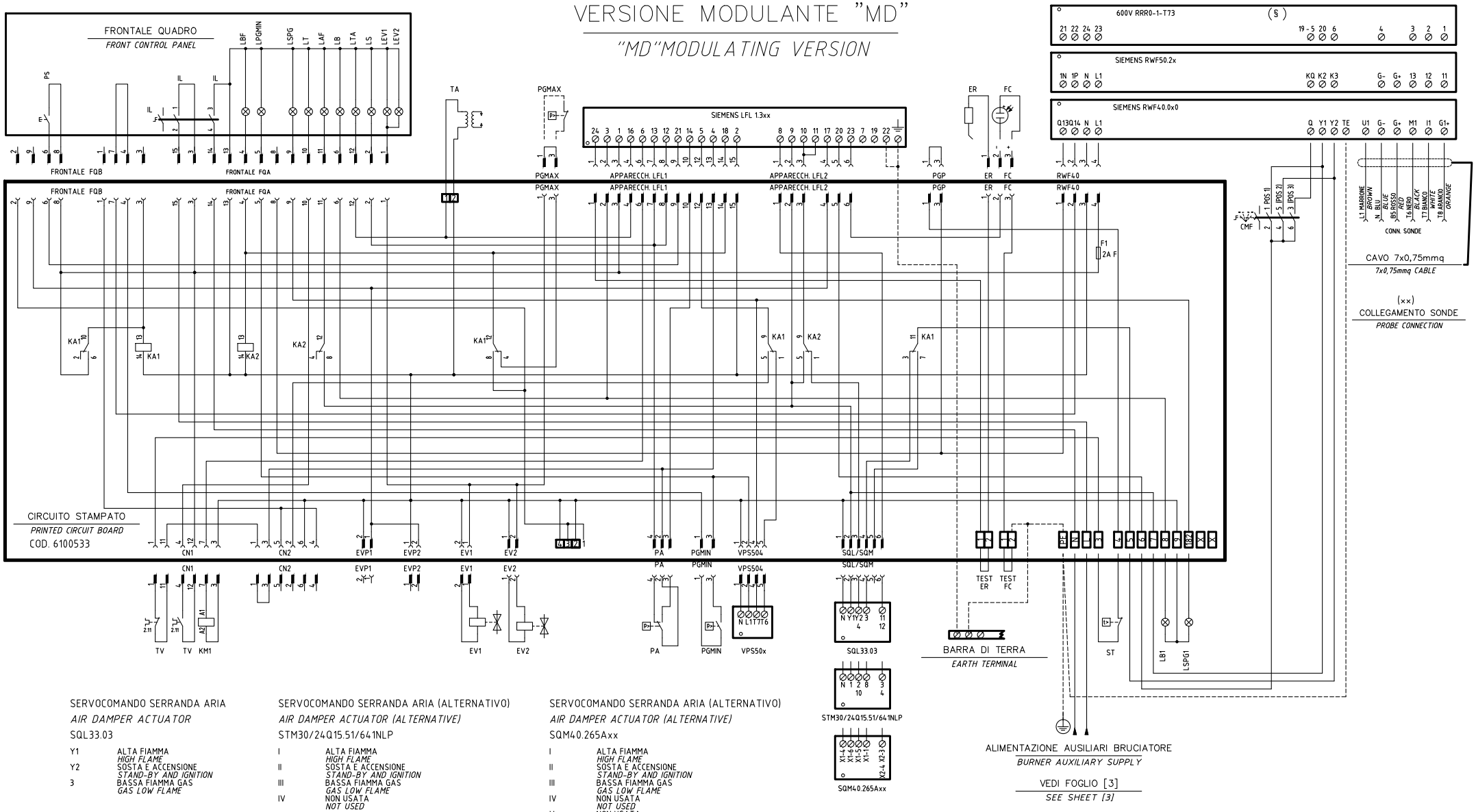

SERVOCOMANDO SERRANDA ARIA
AIR DAMPER ACTUATOR
SQL33.03

Y1	ALTA FIAMMA *HIGH FLAME*
Y2	SOSTA E ACCENSIONE *STAND-BY AND IGNITION*
3	BASSA FIAMMA GAS *GAS LOW FLAME*

SERVOCOMANDO SERRANDA ARIA (ALTERNATIVO)
AIR DAMPER ACTUATOR (ALTERNATIVE)
STM30/24Q15.51/641NLP

I	ALTA FIAMMA *HIGH FLAME*
II	SOSTA E ACCENSIONE *STAND-BY AND IGNITION*
III	BASSA FIAMMA GAS *GAS LOW FLAME*
IV	NON USATA *NOT USED*

SERVOCOMANDO SERRANDA ARIA (ALTERNATIVO)
AIR DAMPER ACTUATOR (ALTERNATIVE)
SQM40.265Axx

I	ALTA FIAMMA *HIGH FLAME*
II	SOSTA E ACCENSIONE *STAND-BY AND IGNITION*
III	BASSA FIAMMA GAS *GAS LOW FLAME*
IV	NON USATA *NOT USED*
V	NON USATA *NOT USED*
VI	NON USATA *NOT USED*

(§)

SCHEDA [CPU]
VISTA LATO COMPONENTI
CIRCUIT [CPU]
COMPONENTS SIDE VIEW

PONTICELLO INTERNO PER SELEZIONE SEGNALE MORSETTO 3
INTERNAL BRIDGE FOR TERMINAL 3 SELECTION SIGNAL

Data	01/10/2008	PREC. 1	FOGLIO 2
Revisione	03		
Dis. N.	21 – 018	SEGUE 3	TOTALE 3

SIGLA/ITEM	FUNZIONE	FUNCTION
CMF	COMMUT. MANUALE FUNZ. 0)FERMO 1)ALTA FIAMMA 2)BASSA FIAMMA 3)AUTOMATICO	MANUAL SWITCH 0)OFF 1)HIGH FLAME 2)LOW FLAME 3)AUTOMATIC
ER	ELETTRODO RILEVAZIONE FIAMMA	FLAME DETECTION ELECTRODE
EV1	ELETTROVALVOLA GAS LATO RETE (O GRUPPO VALVOLE)	UPSTREAM GAS SOLENOID VALVE (OR VALVES GROUP)
EV2	ELETTROVALVOLA GAS LATO BRUCIATORE (O GRUPPO VALVOLE)	DOWNSTREAM GAS SOLENOID VALVE (OR VALVES GROUP)
F1	FUSIBILE AUSILIARIO	AUXILIARY FUSE
F2	FUSIBILI LINEA MOTORE VENTILATORE	FAN MOTOR LINE FUSES
F3	FUSIBILE DI LINEA	LINE FUSE
FC	SONDA UV RILEVAZIONE FIAMMA (ALTERNATIVA)	UV FLAME DETECTOR (ALTERNATIVE)
600V RRR0-1-T73	REGOLATORE MODULANTE (ALTERNATIVO)	BURNER MODULATOR (ALTERNATIVE)
IG	INTERRUTTORE GENERALE	MAINS SWITCH
IL	INTERRUTTORE LINEA AUSILIARI	AUXILIARY LINE SWITCH
KA1	RELE' AUSILIARIO	AUXILIARY RELAY
KA2	RELE' AUSILIARIO	AUXILIARY RELAY
KM1	CONTATTORE MOTORE VENTILATORE	FAN MOTOR CONTACTOR
LAF	LAMPADA SEGNALAZIONE ALTA FIAMMA BRUCIATORE	BURNER IN HIGH FLAME INDICATOR LIGHT
LB	LAMPADA SEGNALAZIONE BLOCCO BRUCIATORE	INDICATOR LIGHT FOR BURNER LOCK-OUT
LB1	LAMPADA SEGNALAZIONE BLOCCO BRUCIATORE	INDICATOR LIGHT FOR BURNER LOCK-OUT
LBF	LAMPADA SEGNALAZIONE BASSA FIAMMA BRUCIATORE	BURNER IN LOW FLAME INDICATOR LIGHT
LEV1	LAMPADA SEGNALAZIONE APERTURA [EV1]	INDICATOR LIGHT FOR OPENING OF ELECTRO-VALVE [EV1]
LEV2	LAMPADA SEGNALAZIONE APERTURA [EV2]	INDICATOR LIGHT FOR OPENING OF ELECTRO-VALVE [EV2]
LPGMIN	LAMPADA SEGNALAZIONE PRESENZA GAS IN RETE	INDICATOR LIGHT FOR PRESENCE OF GAS IN THE NETWORK
LS	LAMPADA SEGNALAZIONE SOSTA BRUCIATORE	INDICATOR LIGHT FOR BURNER STAND-BY
LSPG	LAMPADA SEGNALAZIONE BLOCCO CONTROLLO TENUTA VALVOLE	INDICATOR LIGHT FOR LEAKAGE OF VALVES
LSPG1	LAMPADA SEGNALAZIONE BLOCCO CONTROLLO TENUTA VALVOLE	INDICATOR LIGHT FOR LEAKAGE OF VALVES
LT	LAMPADA SEGNALAZIONE BLOCCO TERMICO MOTORE VENTILATORE	INDICATOR LIGHT FOR FAN OVERLOAD TRIPPED
LTA	LAMPADA SEGNALAZIONE TRASFORMATORE DI ACCENSIONE	IGNITION TRANSFORMER INDICATOR LIGHT
MV	MOTORE VENTILATORE	FAN MOTOR
PA	PRESSOSTATO ARIA	AIR PRESSURE SWITCH
PGMAX	PRESSOSTATO GAS DI MASSIMA PRESSIONE (OPTIONAL)	MAXIMUM PRESSURE GAS SWITCH (OPTIONAL)
PGMIN	PRESSOSTATO GAS DI MINIMA PRESSIONE	MINIMUM GAS PRESSURE SWITCH
PS	PULSANTE SBLOCCO FIAMMA	LOCK-OUT RESET BUTTON
PT100	SONDA DI TEMPERATURA	TEMPERATURE PROBE

SIGLA/ITEM	FUNZIONE	FUNCTION
SD-PRESS	SONDA DI PRESSIONE	PRESSURE PROBE
SD-TEMP.	SONDA DI TEMPERATURA	TEMPERATURE PROBE
SD - 4÷20mA	TRASDUTTORE USCITA IN CORRENTE	TRANSDUCER CURRENT OUTPUT
SIEMENS LFL 1.3xx	APPARECCHIATURA CONTROLLO FIAMMA	CONTROL BOX
SIEMENS RWF40.0x0	REGOLATORE MODULANTE	BURNER MODULATOR
SIEMENS RWF50.2x	REGOLATORE MODULANTE (ALTERNATIVO)	BURNER MODULATOR (ALTERNATIVE)
SQL33.03	SERVOCOMANDO SERRANDA ARIA	AIR DAMPER ACTUATOR
SQM40.265Axx	SERVOCOMANDO SERRANDA ARIA (ALTERNATIVO)	AIR DAMPER ACTUATOR (ALTERNATIVE)
ST	SERIE TERMOSTATI/PRESSOSTATI	SERIES OF THERMOSTATS OR PRESSURE SWITCHES
STM30/24Q15.51/641NLP	SERVOCOMANDO SERRANDA ARIA (ALTERNATIVO)	AIR DAMPER ACTUATOR (ALTERNATIVE)
TA	TRASFORMATORE DI ACCENSIONE	IGNITION TRANSFORMER
TAB	TERMOSTATO/PRESSOSTATO ALTA-BASSA FIAMMA	HIGH-LOW THERMOSTAT/PRESSURE SWITCHES
TV	TERMICO MOTORE VENTILATORE	FAN MOTOR THERMAL
VPS50x	CONTROLLO DI TENUTA VALVOLE GAS	GAS PROVING SYSTEM

(××)

ATTENZIONE COLLEGAMENTO SONDE CON CONNETTORE 7 POLI

WARNING PROBE CONNECTION WITH 7 PINS CONNECTOR

600V RRR0-1-T73

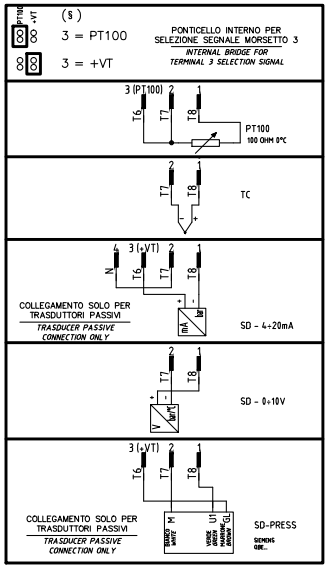

RWF40.0x0

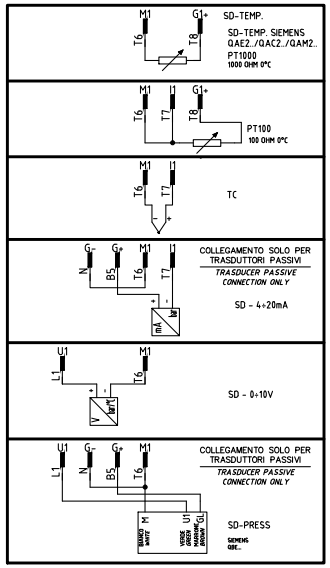

RWF50.2x

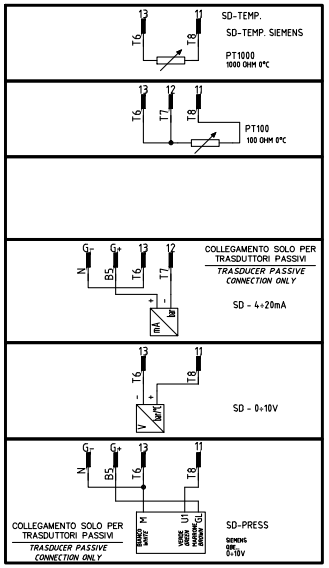

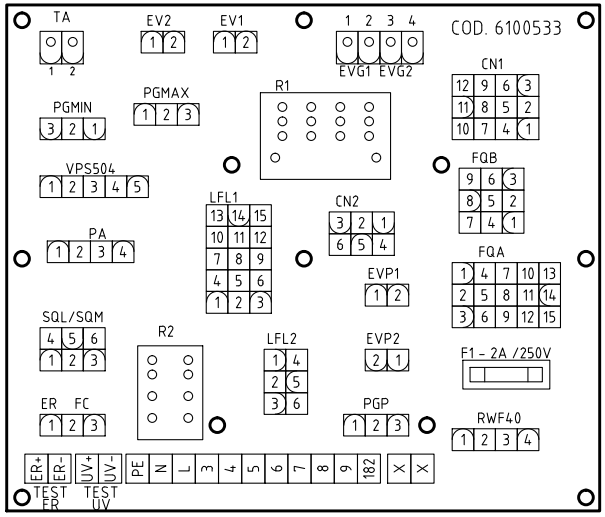

QG - MC1

MORSETTIERA COLLEGAMENTO LINEA E MOTORE TRIFASE

MOTOR THREE PHASES AND ELECTRIC SUPPLY CONNECTION TERMINAL BOARD

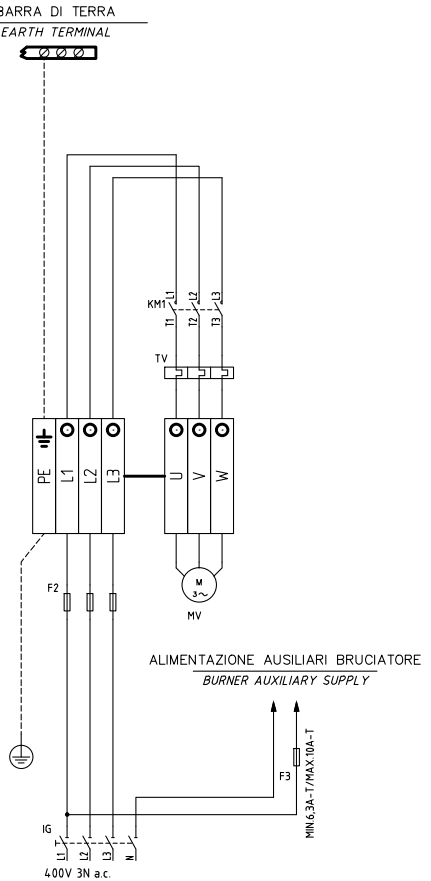

Data	01/10/2008	PREC. 2	FOGLIO 3
Revisione	03		
Dis. N.	21 – 018	SEGUE /	TOTALE 3

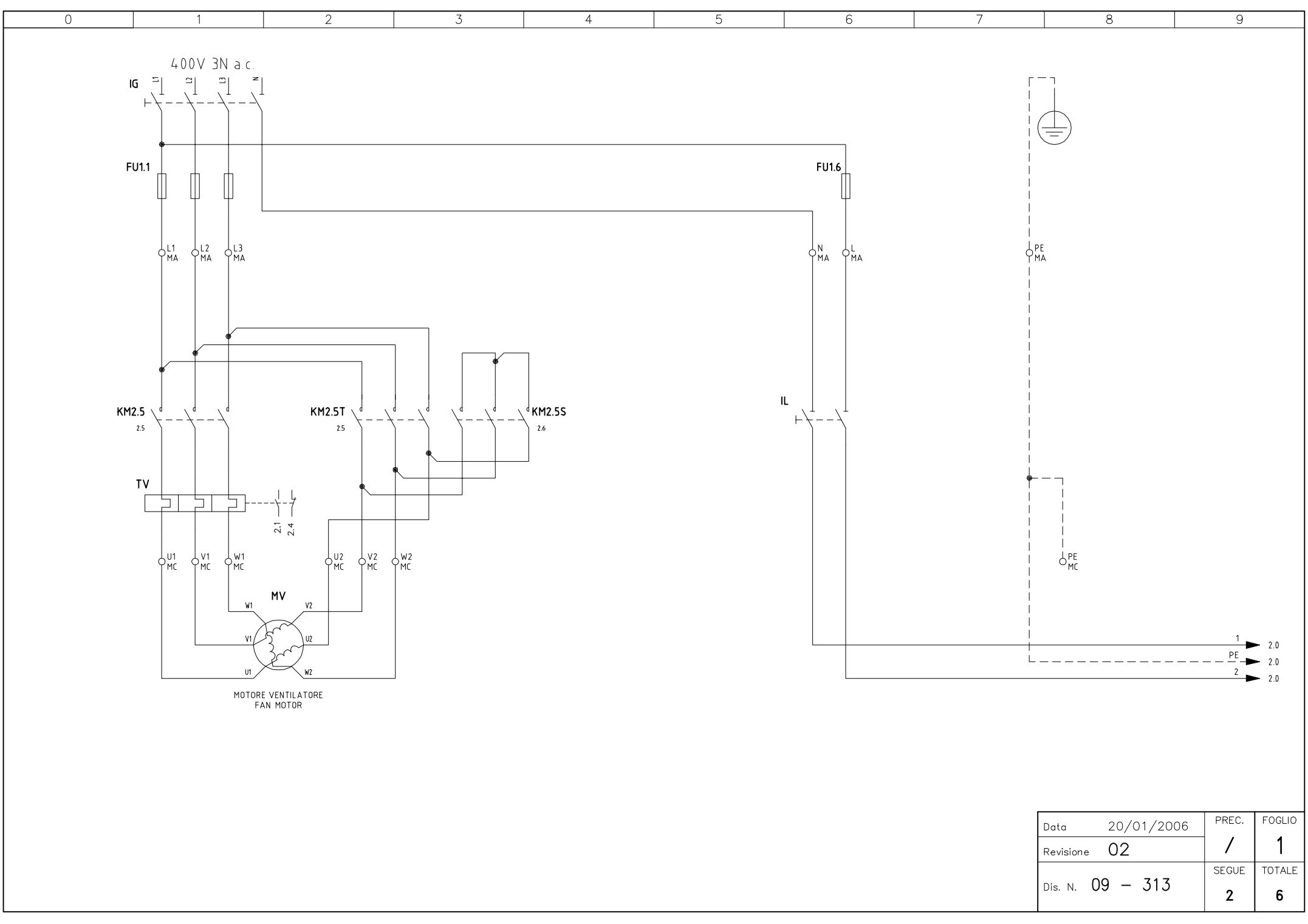

Data 20/01/2006		PREC.	FOGLIO
Revisione 02		/	1
Dis. N. 09 – 313		SEGUE	TOTALE
		2	6

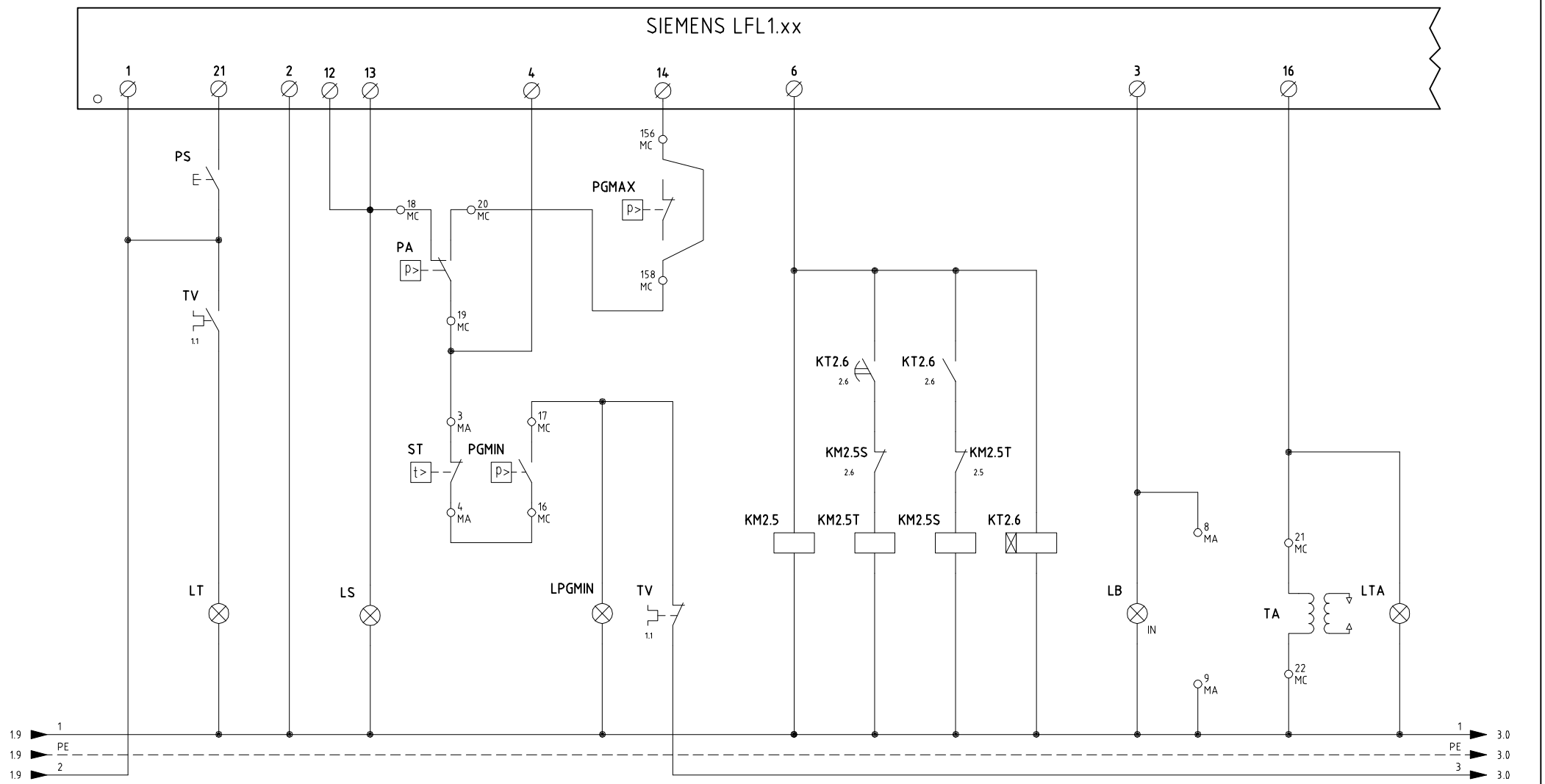

Data 20/01/2006		PREC.	FOGLIO
Revisione 02		1	2
Dis. N. 09 – 313		SEGUE	TOTALE
		3	6

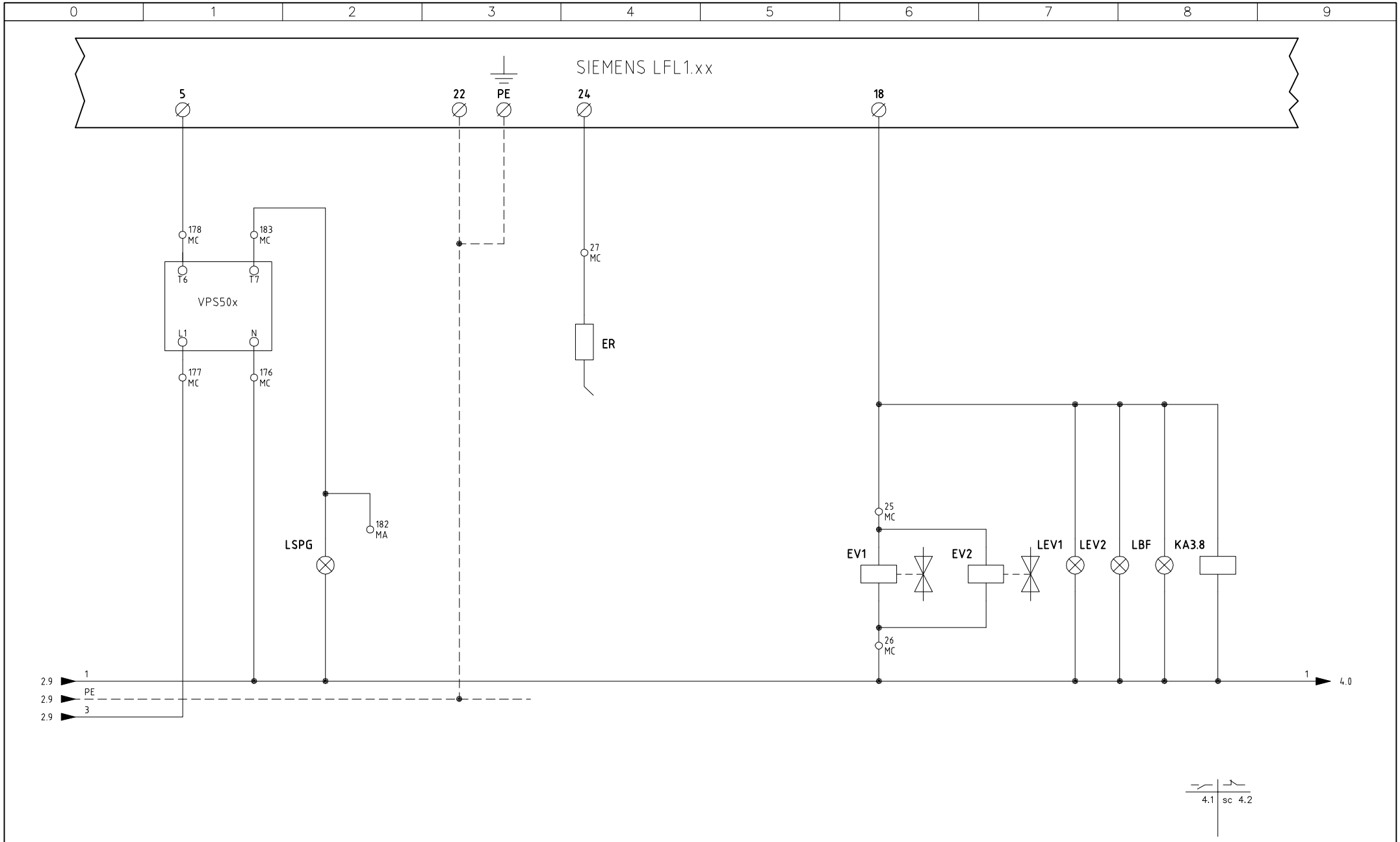

Data 20/01/2006		PREC.	FOGLIO
Revisione 02		2	3
Dis. N. 09 – 313		SEGUE	TOTALE
		4	6

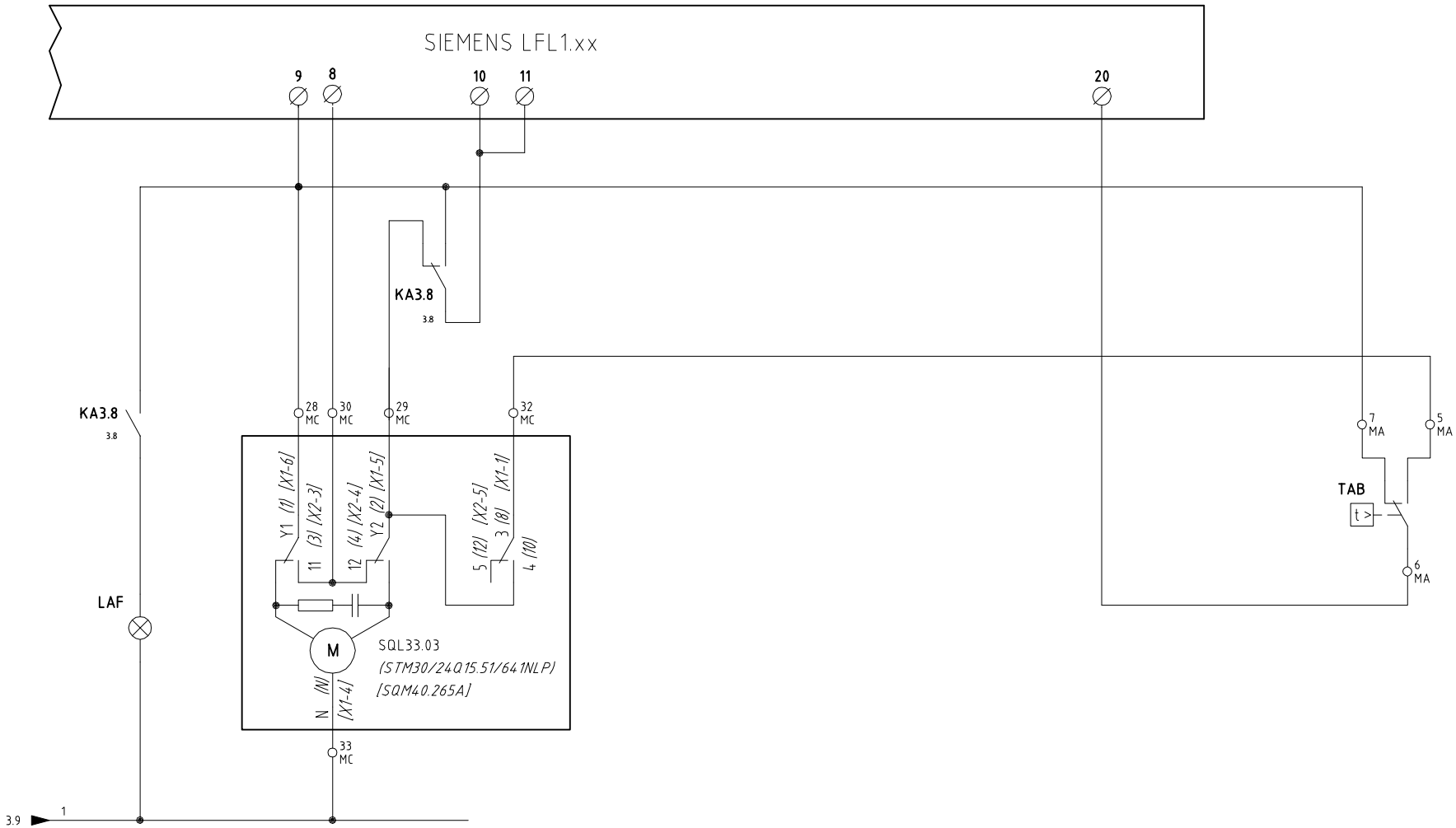

Data 20/01/2006	PREC. 3	FOGLIO 4	
Revisione 02			
Dis. N. 09 – 313	SEGUE 5	TOTALE 6	

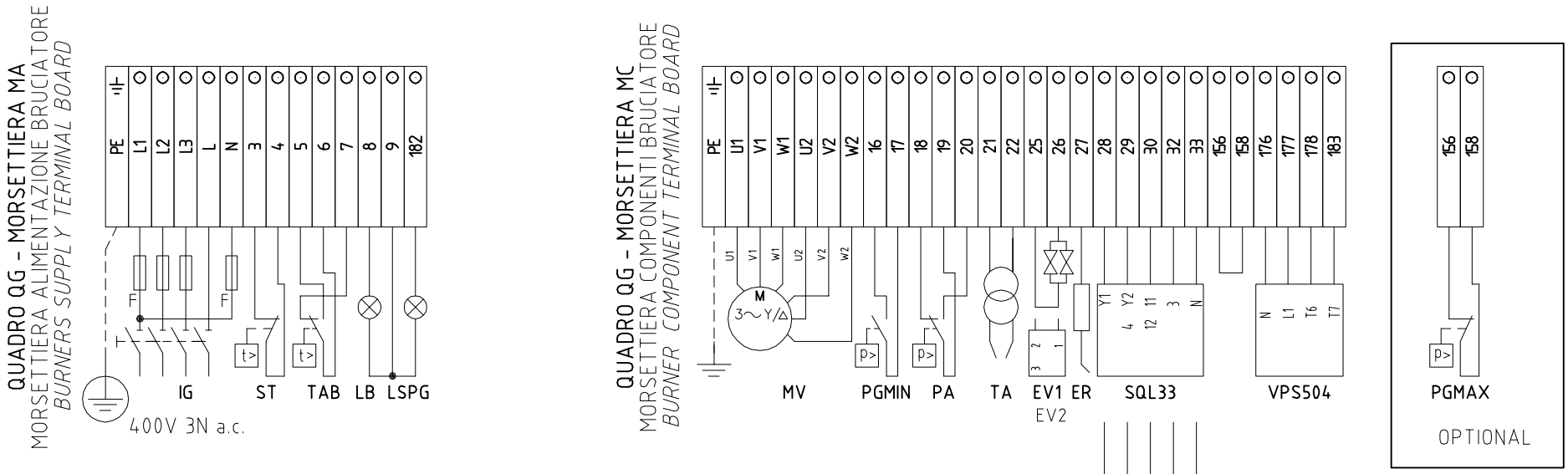

CAMME SERVOCOMANDO SERRANDA ARIA
CAMS FOR AIR DAMPER SERVO CONTROL
SQL33

Y1	ALTA FIAMMA *HIGH FLAME*
Y2	SOSTA E ACCENSIONE *STAND-BY AND IGNITION*
3	BASSA FIAMMA *LOW FLAME*

CAMME SERVOCOMANDO SERRANDA ARIA (ALTERNATIVO)
CAMS FOR AIR DAMPER ACTUATOR (ALTERNATIVE)
STM30/24Q15.51/641NLP

I	ALTA FIAMMA *HIGH FLAME*
II	SOSTA E ACCENSIONE *STAND-BY AND IGNITION*
III	BASSA FIAMMA *LOW FLAME*
V	NON USATA *NOT USED*

CAMME SERVOCOMANDO SERRANDA ARIA (ALTERNATIVO)
CAMS FOR AIR DAMPER ACTUATOR (ALTERNATIVE)
SQM40.265A

I	ALTA FIAMMA *HIGH FLAME*
II	SOSTA E ACCENSIONE *STAND-BY AND IGNITION*
III	BASSA FIAMMA *LOW FLAME*
IV	NON USATA *NOT USED*
VI	NON USATA *NOT USED*

Data 20/01/2006		PREC.	FOGLIO
Revisione 02		4	5
Dis. N. 09 – 313		SEGUE	TOTALE
		6	6

0	1	2	3	4	5	6	7	8	9

SIGLA/ITEM	FOGLIO/SHEET	FUNZIONE	FUNCTION
(STM30/24Q15.51/641NLP)	4	SERVOCOMANDO SERRANDA ARIA (ALTERNATIVO)	AIR DAMPER ACTUATOR (ALTERNATIVE)
[SQM40.265A]	4	SERVOCOMANDO SERRANDA ARIA (ALTERNATIVO)	AIR DAMPER ACTUATOR (ALTERNATIVE)
ER	3	ELETTRODO RIVELAZIONE FIAMMA	FLAME DETECTION ELECTRODE
EV1	3	ELETTROVALVOLA GAS LATO RETE (O GRUPPO VALVOLE)	GAS ELECTRO-VALVE UPSTREAM (OR VALVES GROUP)
EV2	3	ELETTROVALVOLA GAS LATO BRUCIATORE (O GRUPPO VALVOLE)	GAS ELECTRO-VALVE DOWNSTREAM (OR VALVES GROUP)
FU1.1	1	FUSIBILI DI LINEA	LINE FUSES
FU1.6	1	FUSIBILE DI LINEA	LINE FUSE
IG	1	INTERRUTTORE GENERALE	MAIN DISCONNECTOR
IL	1	INTERRUTTORE LINEA AUSILIARI	AUXILIARY LINE SWITCH
KA3.8	3	RELE' AUSILIARIO	AUXILIARY RELAY
KM2.5	2	CONTATTORE MOTORE VENTILATORE (LINEA)	FAN MOTOR CONTACTOR (LINE)
KM2.5S	2	CONTATTORE MOTORE VENTILATORE (STELLA)	FAN MOTOR CONTACTOR (STAR)
KM2.5T	2	CONTATTORE MOTORE VENTILATORE (TRIANGOLO)	FAN MOTOR CONTACTOR (DELTA)
KT2.6	2	TEMPORIZZATORE STELLA/TRIANGOLO	STAR/DELTA DELAYED RELAY
LAF	4	LAMPADA SEGNALAZIONE ALTA FIAMMA BRUCIATORE	BURNER IN HIGH FLAME INDICATOR LIGHT
LB	2	LAMPADA SEGNALAZIONE BLOCCO BRUCIATORE	INDICATOR LIGHT FOR BURNER LOCK-OUT
LBF	3	LAMPADA SEGNALAZIONE BASSA FIAMMA BRUCIATORE	BURNER IN LOW FLAME INDICATOR LIGHT
LEV1	3	LAMPADA SEGNALAZIONE APERTURA (EV1)	INDICATOR LIGHT FOR OPENING OF ELECTRO-VALVE (EV1)
LEV2	3	LAMPADA SEGNALAZIONE APERTURA (EV2)	INDICATOR LIGHT FOR OPENING OF ELECTRO-VALVE (EV2)
LPGMIN	2	LAMPADA SEGNALAZIONE PRESENZA GAS IN RETE	INDICATOR LIGHT FOR PRESENCE OF GAS IN THE NETWORK
LS	2	LAMPADA SEGNALAZIONE SOSTA BRUCIATORE	INDICATOR LIGHT FOR BURNER STAND-BY
LSPG	3	LAMPADA SEGNALAZIONE BLOCCO CONTROLLO TENUTA VALVOLE	INDICATOR LIGHT FOR LEAKAGE OF VALVES
LT	2	LAMPADA SEGNALAZIONE BLOCCO TERMICO MOTORE VENTILATORE	INDICATOR LIGHT FOR FAN OVERLOAD TRIPPED
LTA	2	LAMPADA SEGNALAZIONE TRASFORMATORE DI ACCENSIONE	IGNITION TRANSFORMER INDICATOR LIGHT
MV	1	MOTORE VENTILATORE	FAN MOTOR
PA	2	PRESSOSTATO ARIA COMBURENTE	COMBUSTION AIR PRESSURE SWITCH
PGMAX	2	PRESSOSTATO GAS DI MASSIMA PRESSIONE (OPTIONAL)	MAXIMUM PRESSURE GAS SWITCH (OPTIONAL)
PGMIN	2	PRESSOSTATO GAS DI MINIMA PRESSIONE	MINIMUM GAS PRESSURE SWITCH
PS	2	PULSANTE SBLOCCO FIAMMA	LOCK-OUT RESET BUTTON
SIEMENS LFL1.xx	2	APPARECCHIATURA CONTROLLO FIAMMA	FLAME MONITOR DEVICE
SQL33.03	4	SERVOCOMANDO SERRANDA ARIA	AIR DAMPER ACTUATOR
ST	2	SERIE TERMOSTATI/PRESSOSTATI	SERIES OF THERMOSTATS OR PRESSURE SWITCHES
TA	2	TRASFORMATORE DI ACCENSIONE	IGNITION TRANSFORMER
TAB	4	TERMOSTATO/PRESSOSTATO ALTA-BASSA FIAMMA	HIGH-LOW THERMOSTAT/PRESSURE SWITCHES
TV	1	TERMICO MOTORE VENTILATORE	FAN MOTOR THERMAL
VPS50x	3	CONTROLLO DI TENUTA VALVOLE GAS	GAS LEAKAGE CONTROL UNIT

Data 20/01/2006		PREC. 5	FOGLIO 6
Revisione 02			
Dis. N. 09 – 313		SEGUE /	TOTALE 6

C.I.B. UNIGAS S.p.A.
Via L.Galvani, 9 - 35011 Campodarsego (PD) - ITALY
Tel. +39 049 9200944 - Fax +39 049 9200945/9201269
web site: www.cibunigas.it - e-mail: cibunigas@cibunigas.it

Note: specifications and data subject to change. Errors and omissions excepted.

LME73.000Ax + PME73.831AxBC
LME73.831AxBC

Service instruction manual

M12921CB Rel.1.2 02/2016

GENERAL FEATURES

LME/ is suitable for gas, light and heavy oil burners
LME7 series has two devices: LME73.000 (hardware) and PME73.831AxBC (programmable unit). The LME73.831AxBC is also available: it has a built in software and it isa not programmable.
LME7 is inside the control panel. If supplied, PME73.831BC is inside the LME7;
The display AZL23.. or AZL21.. is available for Service and hardware setup.

LME7… are used for the startup and supervision of 2-stage/progressive, modulating forced draft gas burners in intermittent operation.
The flame is supervised with an ionization probe, optionally with UV flame detector QRA2..., QRA4.U or QRA10....
Integrated in the LME7... basic unit are:
• Burner control
• BCI
• Control for one actuator
• Lockout reset button (info button)
• 3 multicolor signal lamp LED for operations and fault notifications
• 3 x 7-segment display for service, fault and operating state information
• Interface for program module (no function)
Passwords protect the different parameter levels against unauthorized access. Basic settings that the plant operator can make on site require no password.
Functions:
- Undervoltage detection
- Electrical remote reset facility
- Accurate control times thanks to digital signal handling
- Multicolor indication of fault status and operating state messages
- Air pressure supervision with function check of air pressure switch during start and operation (gas)
- Repetition limitation
- Controlled intermittent operation after 24 hours of continuous operation*
- BCI
- Indication of program sequence

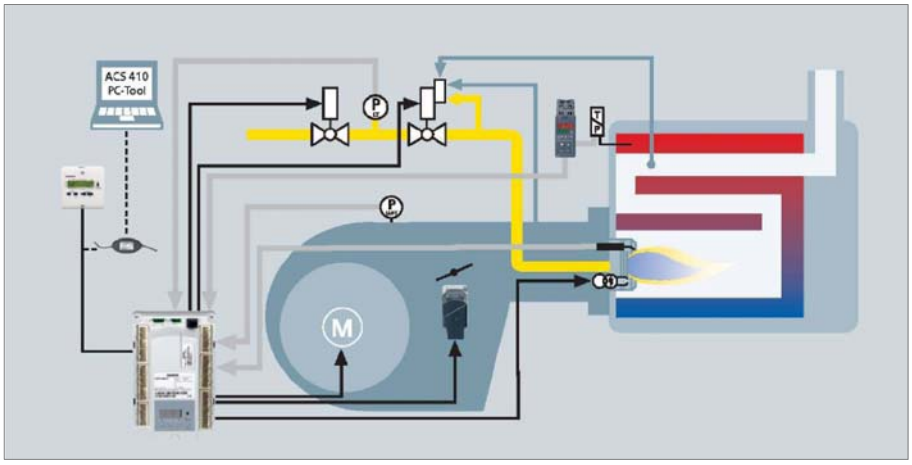

* after no more than 24 hours of continuous operation, the burner control initiates automatic controlled shutdown followed by a restart.

User interface :

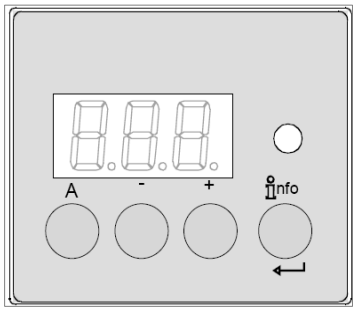

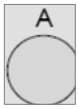	***Button A*** - Display preset output - In lockout position: Power value to the time of fault
	I***nfo and Enter button*** - Reset in the event of fault, changeover visual diagnostic of the cause of fault (refer to chapter Diagnostics of cause of fault)
	- button - Display flame signal current 2 or phases display - In lockout position: MMI phase to the time of fault
	+ button - Display flame signal current 1 or phases display - In lockout position: MMI phase to the time of fault
	3 multicolor signal lamp - Refer to chapter “Blink code table”
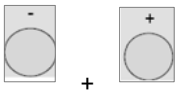	**+ and - button: Escape function** (press + and - simultaneously) - No adoption of value - One menu level up - Keep depressed for >1second for backup / restore function

First startup when PME is supplied or PME replacement:

First startup:
1) insert a new PME
2) turn the power on; The diplay shows "rst" and "PrC" one after the other.
3) keep pushing the INFO 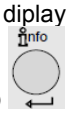 button more than 3 seconds; "run" appears; PME parameters will be transferred to LME
4) at the end, "End" and "rst" appears one after the other; Later (2'), the control box locks out "Loc 138"
5) reset the control box by pressing the INFO button (for less than 3 seconds)
Now the display shows "OFF"; the burner is ready to be started.

Replacement:
1) Turn off the burner, replace the existing PME with a new one
2) For the first startup, repeat the above procedure, from step 2.

List of phase display on board LME :

Phase number of 7-segment display	**LED**	**Function**
Standby		
OFF	Off	Standby, waiting for heat demand
P08	Off	Mains ON / test phase (e.g. detector test)
Startup		
P21	Yellow	Safety valve ON, air pressure switch test / POC test (timeout / locking
P22	Yellow	Fan motor ON / air pressure switch test / settling time
P24	Yellow	Actuator opens in prepurging position
P30	Yellow	Prepurging
P36	Yellow	Actuator closes in ignition load / low-fire position
P38	Yellow blinking	Preignition time
P40	Yellow blinking	1st safety time (TSA1) / ignition transformer ON
P42	Green	Safety time (ignition transformer OFF), flame check
P44	Green	Interval: End of safety time and fuel valve 1 (V1) ON Interval: End of safety time and load controller (LR) release
P50 Green	P50 Green	2nd safety time (TSA2)
P54 Green	P54 Green	P259.01: Actuator opens in > low-fire
P54 Green	P54 Green	P260: Actuator closes in low-fire
oP1 Green	oP1 Green	Interval until release of load controller target (analog or 3-position step input)
Operation		
oP	Green	Operation, modulating operation
Shutdown		
P10	Yellow	Shutdown, actuator opens in CLOSE position (home run)
P72	Yellow	Actuator opens in high-fire position / end of operation
P74	Yellow	Postpurging
Valve proving		
P80	Yellow	Test space evacuating
P81	Yellow	Checking time fuel valve 1
P82	Yellow	Test space filling
P83	Yellow	Checking time fuel valve 2
Waiting phases (start prevention)		
P01	Red / yellow blinking	Undervoltage
P02	Yellow	Safety loop open
P04	Red / green blinking	Extraneous light on burner startup (timeout / locking after 30 s)
P90	Yellow	Pressure switch-min open
Lockout		
LOC	Red	Lockout phase

Operation :

	The lockout reset button (info button) (EK) is the key operating element for resetting the burner control and for activating / deactivating the diagnostics functions.
	The multicolor signal lamp (LED) is the key indicating element for visual diagnostics.

Both lockout reset button (EK) and signal lamp (LED) are located in the control panel.
There are 2 diagnostics choices:
1. Visual diagnostics: Indication of operating state or diagnostics of cause of fault
2. Diagnostics: Via internal display or to AZL2.. display and operating unit
Visual diagnostics:
In normal operation, the different operating states are indicated in the form of color codes according to the color code table given below.

Color code table for multicolor signal lamp (LED) **:**

State	Color code	Color
Waiting time (tw), other waiting states	❍.....	OFF
Ignition phase, ignition controlled	●❍●❍●❍●❍●❍●❍●	Blinking yellow
Operation, flame o.k.	□.....	Green
Operation, flame not o.k.	□❍□❍□❍□❍□❍□❍	Blinking green
Extraneous light on burner startup	□▲□▲□▲□▲□▲□▲	Green-red
Undervoltage	●▲●▲●▲●▲●▲●▲	Yellow-red
Fault, alarm	▲.....	Red
Error code output (refer to «Error code table»)	▲❍ ▲❍ ▲❍ ▲❍	Blinking red
Interface diagnostics	▲▲▲▲▲▲▲▲	Red flicker light
Heating request	●.....	Yellow
Heating request	●●▲●●▲●●▲●●▲●●	Yellow

Key

.....	Steady on
❍	Led off
▲	Led red
●	Led yellow
□	Led green

Program sequence :

Version 1:

- Ignition load < low-fire
- Prepurging in high-fire
- Parameter 515 = 1 (condition parameter 259.01 > 0 seconds)

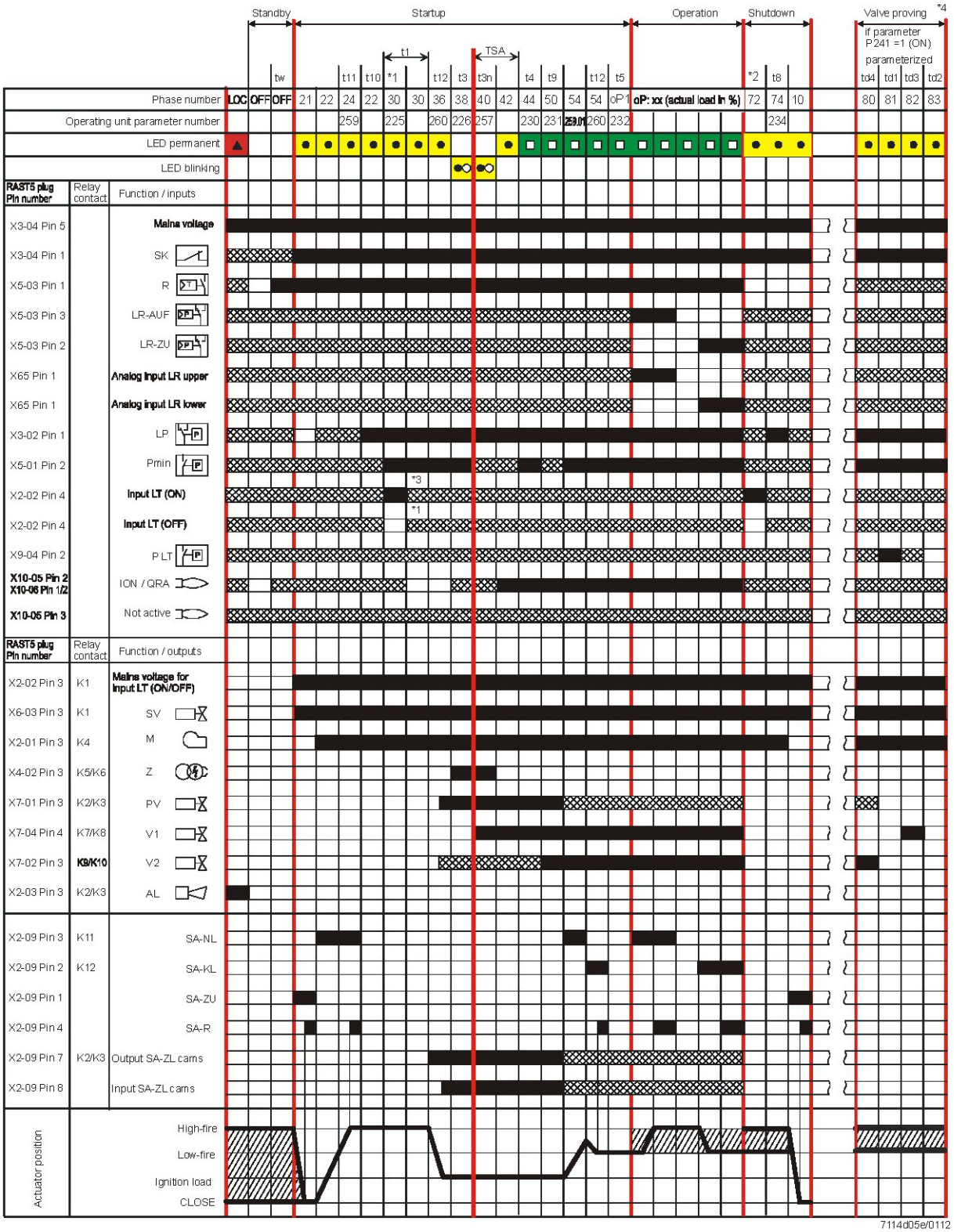

Program sequence :

Version 2:

- Ignition load > low-fire
- Prepurging in high-fire
- Parameter 515 = 1 (condition parameter 259.01 = 0 seconds)

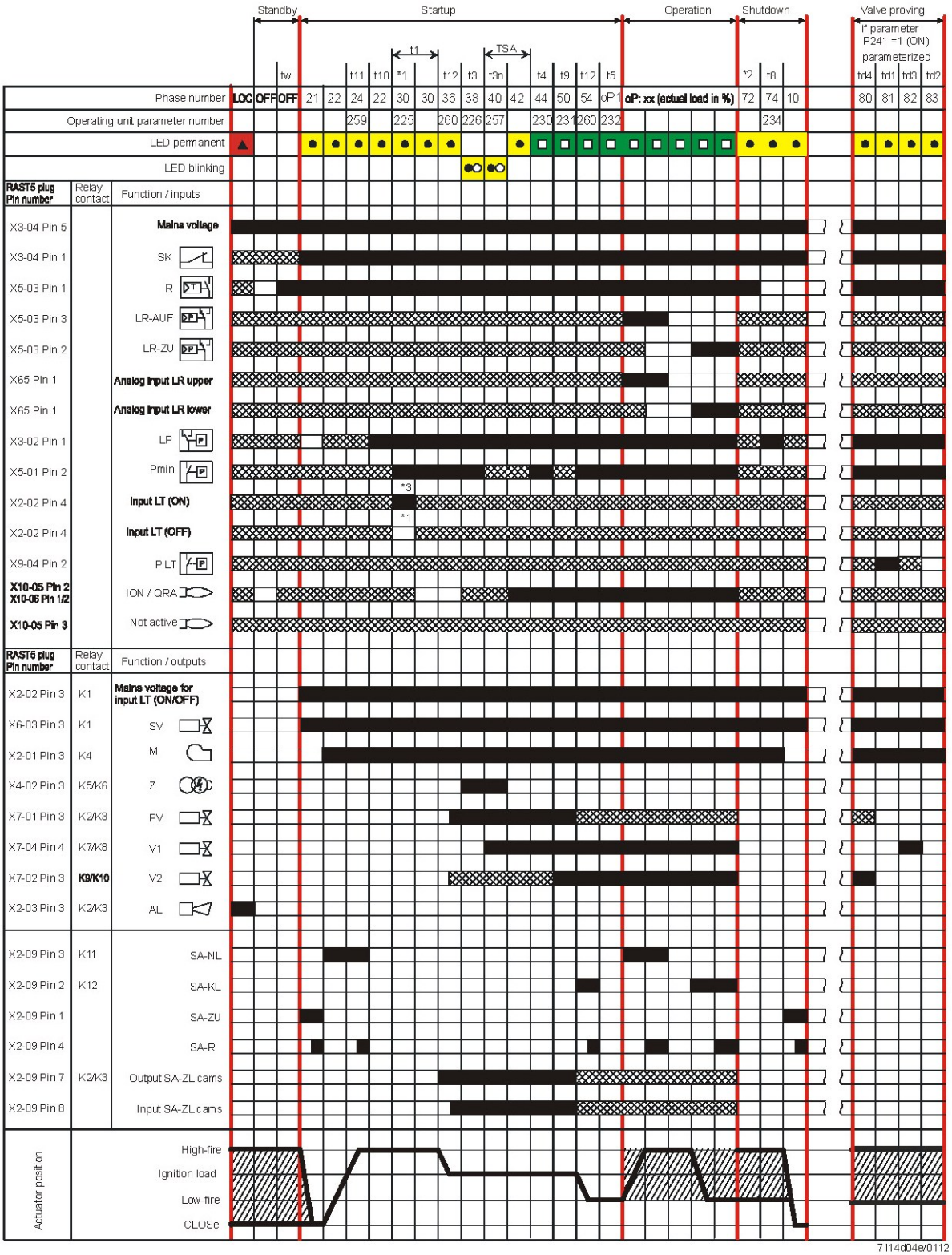

Phase number	Function
LOC	Lockout phase
OFF	Standby, waiting for heat demand
oP	Operation, modulating operation
oP1	Interval until release of load controller target (analog or 3-position step input)
01	Under voltage
02	Safety loop open
04	Extraneous light on burner startup (timeout/locking after 30 seconds)
08	Mains ON/test phase (e.g. detector test)
10	Shutdown, actuator opens in CLOSE position (homerun)
21	Safety valve ON, air pressure switch OFF, actuator opens in CLOSE position
22	Part 1: Fan motor ON
	Part 2: Specified time (t10) air pressure switch (LP)
	Message (timeout) stabilization air pressure switch
24	Actuator opens in prepurge position
30	Part 1: Prepurge time (t1) without extraneous light test
	Valve proving after mains ON, lockout
	Part 2: Prepurge time (t1) with extraneous light test
36	Actuator closes in ignition load
38	Preignition (t3)
40	Postignition time (t3n), parameter 257 + 0.3 seconds
42	Flame detection
44	Interval (t4): End of safety time (TSA) and burner valve 2 ON
50	2nd safety time (t9)
54	Parameter 259.01: Actuator opens in > low-fire
	Parameter 260: Actuator closes in low-fire
72	End of operation, checking if valve proving (LT) shall be performed
74	Postpurging (t8)
80	Test space evacuation (td4)
81	Test time (td1) fuel valve 1 (V1)
82	Test space filling (td3)
83	Test time (td2) fuel valve 2 (V2)
90	Pressure switch-min open safety shutdown
*1	Valve proving is conducted when…
	- parameter 241.00 = 1 and parameter 241.02 = 1, or
	- parameter 241.00 = 1 and parameter 241.01 = 0
*2	Valve proving is conducted when…
	- parameter 241.00 = 1 and parameter 241.02 = 1, or
	- parameter 241.00 = 1 and parameter 241.01 = 1
*3	Valve proving (LT) will not be performed

Error code table :

Red blink code of fault signal lamp (LED)	Possible cause
2 x blinks	No establishment of flame at the end of the safety time (TSA)
	- Faulty or soiled flame detector - Faulty or soiled fuel valves - Poor adjustment of burner, no fuel - Faulty ignition equipment
3 x blinks	Air pressure switch (LP) faulty - Loss of air pressure after specified time (t10) - - Air pressure switch (LP) welded in no-load position
4 x blinks	Extraneous light on burner startup
5 x blinks	Time supervision air pressure switch (LP) - Air pressure switch (LP) welded in working position
6 x blinks	Actuator position not reached - Actuator faulty - Wrong adjustment of cam - Actuator defective or blocked - False connection - Misadjustment
7 x blinks	Too many losses of flame during operation (limitation of repetitions) - Faulty or soiled flame detector - Faulty or soiled fuel valves - Poor adjustment of burner
8 x blinks	Free
9 x blinks	Free
10 x blinks	Wiring error or internal error, output contacts, other faults
12 x blinks	Valve proving (LT) - Fuel valve 1 (V1) leaking
13 x blinks	Valve proving (LT) - Fuel valve 2 (V2) leaking
14 x blinks	Error in connection with valve closure control POC
15 x blinks	Error code ≥15 Error code 22: Error of safety loop (SL)

During the time the cause of fault is diagnosed, the control outputs are deactivated:
- Burner remains shut down
- External fault indication (AL) at terminal X2-03, pin 3 steady on

Diagnostics of cause of fault is quit and the burner switched on again by resetting the burner control. Press the lockout reset button (info button) for about 1 second (<3 seconds).

Flame detection – detection electrode :

Short-circuit current	Max. AC 1 mA
Required detector current	Min. DC 2 µA, display approx. 45 %
Possible detector current	Max. DC 3 µA, display approx. 100 %
Permissible length of detector cable (laid separately)	30 m (core-earth 100 pF/m)

Measuring circuit

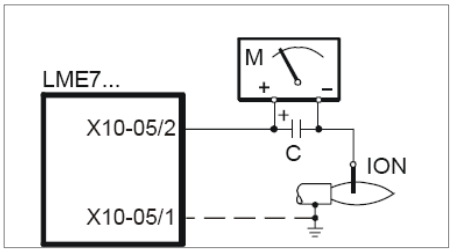

Keys

C	-	Electrolytic condenser 100...470 µF; DC 10...25 V
ION	-	Ionization probe
M	-	Microammeter Ri max. 5,000 Ω

Flame detection – UV probe :

Threshold values when flame is supervised by QRA...

- Start prevention (extraneous light)	Intensity (parameter 954) approx. 12 %
- Operation	Intensity (Parameter 954) approx. 13 %
Operating voltage	AC 280 V ±15 %
Mains frequency	50...60 Hz ±6 %
Required detector current	Min. 70 µA
Possible detector current	
- Operation	Max. 700 µA
Perm. length of detector cable	
- Normal cable, laid separately [1])	Max. 100 m

[1]) Multicore cable not permitted

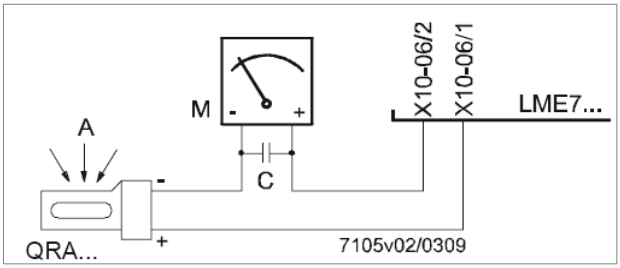

Keys

A	-	Exposure to light
C	-	Electrolytic condenser 100...470 µF; DC 10...25 V
M	-	Microammeter Ri max. 5,000 Ω

Warning!
Input QRA... is not short-circuit-proof!
Short-circuits of X10-06/2 against earth can destroy the QRA... input
Simultaneous operation of flame detector QRA... and detection electrode is not permitted
To make certain the age of the UV tube can be determined, the LME7... basic unit must always be connected to mains supply.

Gas proving system :

Valve proving is dependent on input valve proving ON / OFF (X2-02). When a leak is detected, the gas valve proving function ensures that the gas valves will not be opened and that ignition will not be switched on. Lockout will be initiated.
.

Valve proving with separate pressure switch (P LT)
Step 1: td4 – Evacuation of test space
Gas valve on the burner side is opened to bring the test space to atmospheric pressure.
Step 2: td1 – Test atmospheric pressure
When the gas has closed, the gas pressure in the test space must not exceed a certain level.
Step 3: td3 Filling of test space
Gas valve on the mains side opens to fill the test space.
Step 4: td2 – Test gas pressure
When the gas valve has closed, the gas pressure in the test space must not drop below a certain level.

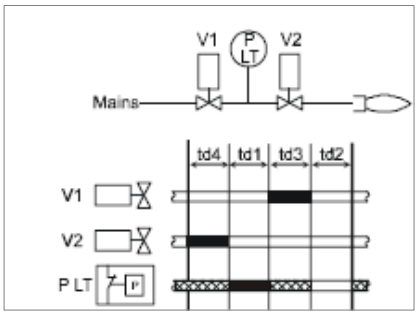

Controllo tenuta con pressostati separati

Keys
td1 Test atmospheric pressure
td2 Test gas pressure
td3 Filling of test space
td4 Evacuation of test space
V… Fuel valve
PLT Pressure switch valve proving
Input / output signal 1 (ON)
Input / output signal 0 (OFF)
Input permissible signal 1 (ON) or 0 (OFF)

No.	***Parameter***
242	Valve proving evacuation of test space
243	Valve proving time test atmospheric pressure
244	Valve proving filling of test space
245	Valve proving time test gas pressure

Instruction, control and modify via AZL2x :

The AZL2x.. display/programming unit is shown below:

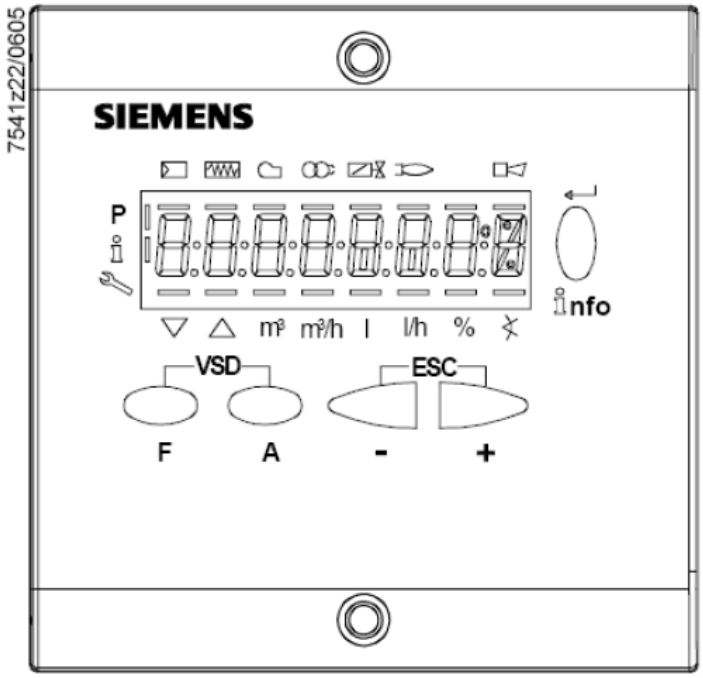

The keys functions are the following:

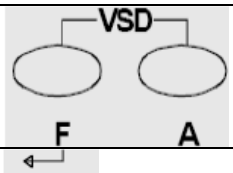	Key F + A While pressing the two keys contemporarly, the code message will appear: by entering the proper password it is possible to access the Service mode.
	Info and Enter keys Used for Info and Service menues Used as Enter key in the setting modes Used as Reset key in the burner operation mode Used to enter a lower level menu
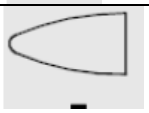	Key - Used for one menu level down Used to decrease a value
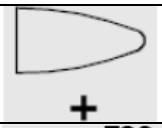	Key + Used for one menu level up Used to increase a a value
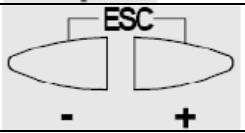	Keys (+ & -)= ESC By pressing + and - at the same time, the ESCAPE function is performed No adoption of value One menu level down

The display will show these data:

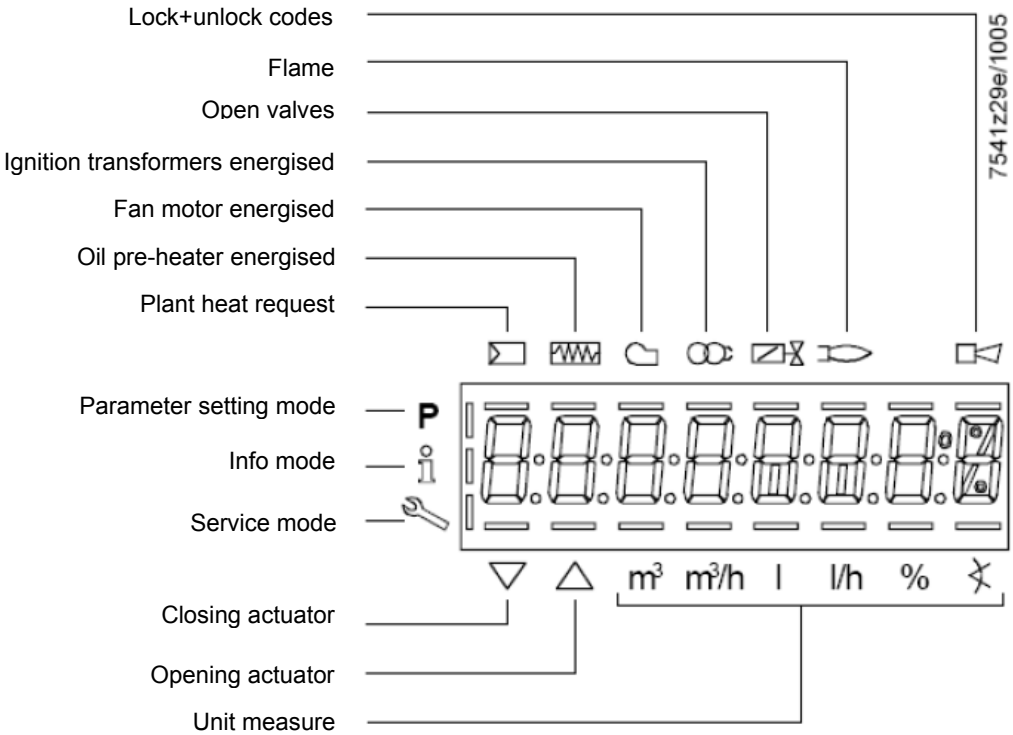

While pushing the

button together with whatever else button, LME73 locks out; the display shows

On stand-by position, 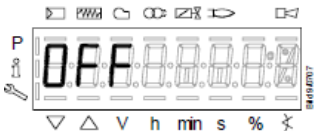

appears

On operation, all the phases appears with their number.

List of phase with display AZL2x :

Phase number	**Function**
Standby	
OFF	Standby, waiting for heat request
Ph08	Power ON / test phase (e.g. detector test)
Startup	
Ph21	Safety valve ON, air pressure switch test / POC test (timeout / locking after 5 seconds), actuator opens in low-fire position / CLOSE position
Ph22	Fan motor ON or air pressure switch test / settling time
Ph24	Actuator travels to the prepurge position
Ph30	Prepurging
Ph36	Actuator closes until ignition load / low-fire is reached, and parameter 259.02: Actuator opens to a position > ignition load
Ph38	Preignition
Ph40	1st safety time (TSA1) / ignition transformer ON
Ph42	Safety time (ignition transformer OFF), flame check
Ph44	Interval: End of safety time and fuel valve 1 (V1) ON
Ph50	2nd safety time (TSA2)
Ph54	P259.01: Actuator opens in > low-fire
Ph54	P260: Actuator closes in low-fire
oP1	Interval until release of load controller target (analog or 3-position step input)
Operation	
oP	Operation, modulating operation
Shutdown	
Ph10	Shutdown, actuator opens in CLOSE position (home run)
Ph72	Actuator opens in high-fire position / end of operation
Ph74	Postpurging
Valve proving	
Ph80	Test space evacuating
Ph81	Checking time fuel valve 1
Ph82	Test space filling
Ph83	Checking time fuel valve 2
Waiting phases (start prevention)	
Ph01	Undervoltage
Ph02	Safety loop open
Ph04	Extraneous light at burner startup (timeout / locking after 30 seconds)
Ph90	Pressure switch-min open → safety shutdown
Lockout	
LOC	Lockout phase

Error code list with operation via internal AZL :

Error code	*Clear text*	*Possible cause*
Loc 2	No establishment of flame at the end of the safety time (TSA)	- Faulty or soiled fuel valves - Faulty or soiled flame detector - Poor adjustment of burner, no fuel - Faulty ignition equipment
Loc 3	Air pressure faulty (air pressure switch (LP) welded in no-load position, decrease to spe-cified time (t10) (air pressure switch (LP) re-sponse time)	Air pressure switch (LP) faulty - Loss of air pressure signal after specified time (t10) - Air pressure switch (LP) is welded in no-load position
Loc 4	Extraneous light	Extraneous light when burner startup
Loc 5	Air pressure faulty, air pressure switch wel-ded in working position	Time out air pressure switch (LP) - Air pressure switch (LP) is welded in working position
Loc 6	Fault of actuator	- Actuator faulty or blocked - Faulty connection - Wrong adjustment
Loc 7	Loss of flame	Too many losses of flame during operation (limitation of repetitions) - Faulty or soiled fuel valves - Faulty or soiled flame detector - Poor adjustment of burner
Loc 8	---	Free
Loc 9	---	Free
Loc 10	Error not relatable (application), internal error	Wiring error or internal error, output contacts, other faults
Loc 12	Valve proving	Fuel valve 1 (V1) leak
Loc 13	Valve proving	Fuel valve 2 (V2) leak
Loc 22	Safety loop open	- Gas pressure switch-max open - Safety limit thermostat cut out
Loc 138	Restore process successful	Restore process successful
Loc 167	Manual locking	Manual locking
Loc: 206	AZL2... incompatible	Use the latest version

Entering the Parameter levels:

y means of a proper use of the keys, it is possible to enter the various level parameters, as shown in the following flow chart :

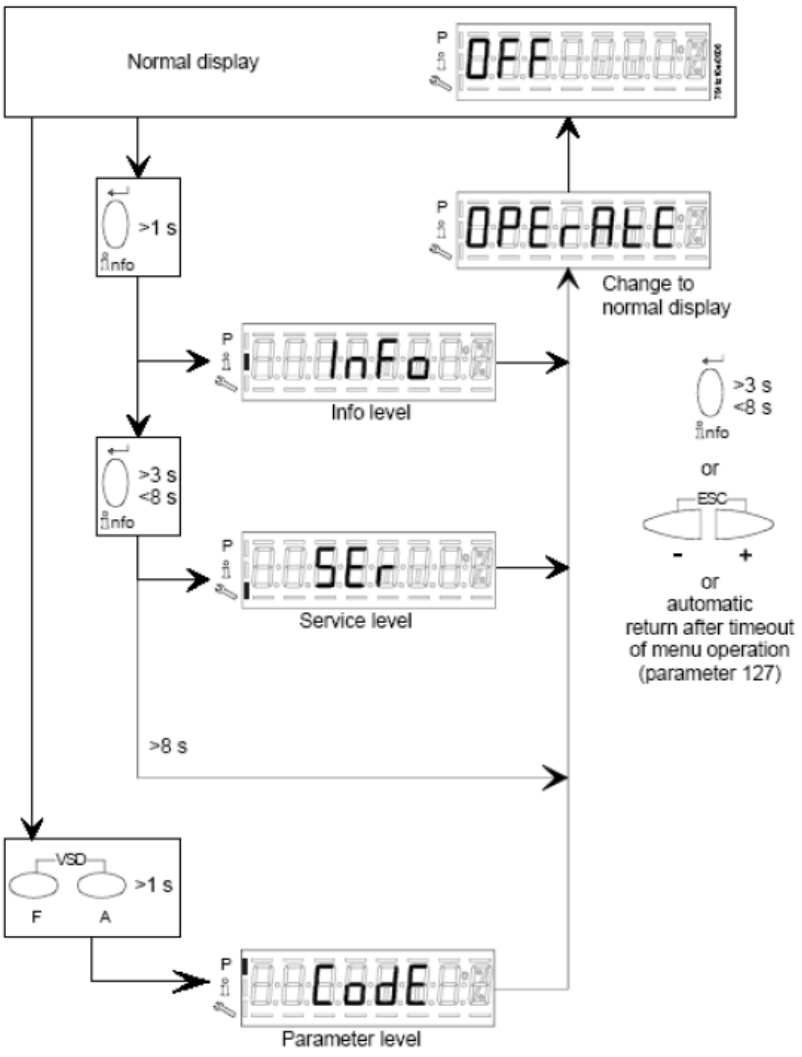

Info level :

Keep pushing the

button until 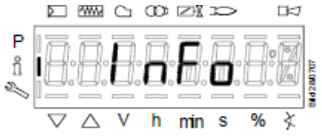

appears. Use + or - for scrolling the parameter list. If on the right side a dash-dot appears, it means the display doesn't show the full description. *Push*

again for 1 to 3 s in order to show the full description.

Below the visible **Info** parameters:

Parameter number	Parameter list PME73.000Ax + PME73.831AxBC LME73.831AxBC	Edit	Value range Min.	Value range Max.	Resolution	Factory setting	Password level reading from level	Password level writing from level
100	**General**							
102	Identification date	Read only	---	---	---		Info	---
103	Identification number	Read only	0	9999	1		Info	---
113	Burner identification	Read only	x	xxxxxxxx	1		Info	---
164	Numbers of startups resettable	Resettable	0	999999	1		Info	Info
166	Total number of startups	Read only	0	999999	1		Info	---
170.00	Switching cycles actuator relay K12	Read only	0	999999	1		Info	---
170.01	Switching cycles actuator relay K11	Read only	0	999999	1		Info	---
170.02	Switching cycles actuator relay K2	Read only	0	999999	1		Info	---
170.03	Switching cycles actuator relay K1	Read only	0	999999	1		Info	---
171	Max. switching cycles actuator relay	Read only	0	999999	1		Info	---

Service level :

Keep pushing the

button until 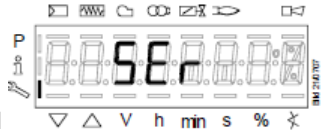

appears. Use + or - for scrolling the parameter list. . If on the right side a dash-dot appears, it means the display doesn't show the full description. *Push*

again for 1 to 3 s in order to show the full description.

Below the visible **Info** parameters:

Parameter number	Parameter list PME73.000Ax + PME73.831AxBC LME73.831AxBC	Edit	Value range Min.	Value range Max.	Resolution	Factory setting	Password level reading from level	Password level writing from level
700	**Error history**							
701	Current error:	Read only					Service	---
	00: Error code		2	255	1			
	01: Startup meter reading		0	999999	1			
	02: MMI phase		---	---	---			
	03: Power value		0%	100%	1			
702	Error history former 1:	Read only					Service	---
	00: Error code		2	255	1			
	01: Startup meter reading		0	999999	1			
	02: MMI phase		---	---	---			
	03: Power value		0%	100%	1			
•								
•								
•								
711	Error history former 10:	Read only					Service	---
	00: Error code		2	255	1			
	01: Startup meter reading		0	999999	1			
	02: MMI phase		---	---	---			
	03: Power value		0%	100%	1			

900	Process data							
936	Normalized speed	Read only	0%	100%	0.01 %		Service	---
951	Mains voltage	Read only	0 V	LME73.000A1: 175 V LME73.000A2: 350 V	1 V		Service	---
954	Flame intensity	Read only	0%	100%	1%		Service	---

Parameter level (Heating engeneering) :

This level lets the engineer to modify some burner parameters. It is protect with a 4 digit password (SO level) and a 5 digit password (OEM level)
Password input : push **F** and **A** buttons together until the display shows "**code"** and 7 underlines. The left one flashes. By **+** or **-** move the flashing underline until it is on the desired position and push "enter". The underline becomes a dash. By means of **+** or **-,** choose the right character and push "enter". Input the whole password and the **PArA** appears and later on **000 Int** .
Scroll the parameters using **+** or **-: 000Int**, **100**, **200**, **500**, **600 are on the display**. Choose the proper parameter group with the **enter** button and scroll the options with **+** e poi **-** (below the full par set: the two columns on the right give the level access). Choose the parameter to be modified with "enter" is writing is allowed. The parameter now flashes: **+** or **–** modifies the parameter and **enter** confirms. **+** and **-** pushed togther movbe the menu one step back. Push **+** and **-** several times in order to get the home position..

Parameter number	Parameter list PME73.000Ax + PME73.831AxBC LME73.831AxBC	Edit	Value range Min.	Value range Max.	Resolution	Factory setting	Password level reading from level	Password level writing from level
0	**Internal parameter**							
41	Heating engineers password (4 characters)	Edit	xxxx	xxxx	---		---	OEM
42	OEM's password (5 characters)	Edit	xxxxx	xxxxx	---		---	OEM
60	Backup / restore	Edit	Restore	Backup	---		---	SO
100	**General**							
123	Min. power control step	Edit	1%	10%	0.1		SO	SO
140	Mode display of Display and operating unit AZL2... 1 = Standard (program phase) 2 = Flame 1 (QRA... / ION) 3 = Flame 2 (QRB... / QRC...) 4 = Active power (power value)	Edit	1	4	4		SO	SO
200	**Burner control**							
224	Specified time (t10) air pressure switch (LP)	Edit	0 s	13.818 s	0.294 s	12,054	SO	OEM
225	Gas: Prepurge time (t1)	Edit	0 s	1237 s	4.851 s	29,106	SO	OEM
226	Gas: Preignition time (t3)	Edit	1.029 s	37.485 s	0.147 s	2,058	SO	OEM
230	Interval (t4): End of safety time (TSA) - fuel valve 1 (V1) ON	Edit	3.234 s	74.97 s	0.294 s	3,234	SO	OEM
231	Interval (t9): Fuel valve 1 (V1) ON - pilot valve (PV) OFF	Edit	0 s	74.97 s	0.294 s	2,940	SO	OEM
232	Interval (t5): Pilot valve (PV) OFF - load controller (LR) release	Edit	2.058 s	74.97 s	0.294 s	8.820	SO	OEM
234	Gas: Postpurge time (t8)	Edit	0 s	1237 s	4.851 s	0	SO	OEM
239	Gas: Intermittent operation after 24 hours of continuous operation 0=OFF 1=ON	Edit	0	1	1	1	SO	OEM

240	Repetition in the event of loss of flame during operation 0 = None 1 = None 2 = 1 x Repetition	Edit	0	2	1	0	SO	OEM
241.00	Valve proving 0 = Off 1 = On	Edit	0	1	1	1	SO	OEM
241.01	Valve proving 0 = During prepurge time (t1) 1 = During postpurge time (t8)	Edit	0	1	1	0	SO	OEM
241.02	Valve proving 0 = According to P241.01 1 = During prepurge time (t1) and postpurge time (t8)	Edit	0	1	1	0	SO	OEM
242	Valve proving test space evacuating	Edit	0 s	2.648 s	0.147 s	2,646	SO	OEM
243	Valve proving time test atmospheric pressure	Edit	1.029 s	37.485 s	0.147 s	10,290	SO	OEM
244	Valve proving test space filling	Edit	0 s	2.648 s	0.147 s	2,646	SO	OEM
245	Valve proving time test gas pressure	Edit	1.029 s	37.485 s	0.147 s	10,290	SO	OEM
254	Response time detector error 0 = 1 s 1 = 3 s	Edit	0	1	1	0	SO	OEM
257	Gas: Postignition time (t3n – 0.3 seconds)	Edit	0 s	13.23 s	0.147 s	2,205	SO	OEM
259.00	Opening time of actuator (t11) (timeout for lockout)	Edit	0 s	1237 s	4.851 s	67,914	SO	OEM
259.01	Opening time of actuator from ignition load to low-fire position	Edit	0 s	37.485 s	0.147 s	14,994	SO	OEM
259.02	Opening time of actuator from low-fire to ignition load position	Edit	0 s	37.485 s	0.147 s	14,994		
260	Closing time of actuator (t12) (timeout for lockout)	Edit	0 s	1237 s	4.851 s	67,914	SO	OEM
500	**Ratio control**							
515	Actuator position during prepurge time (t1) and postpurge time (t8) 0: Purging in low-fire 1: Purging in high-fire	Edit	0	1	1	1	SO	OEM
560	Pneumatic combustion control 0 = off / 3-step modulation 1 = PWM fan / analog modulation ~~2 = air damper / analog modulation (feedback potentiometer ASZxx.3x required)~~	Edit	0	2	1	1	SO	SO

600	Power setting							
654	Analog input (feedback potentiometer ASZxx.3x required) 0 = 3-position step input 1 = 0...10 V 2 = 0...135 Ω 3 = 0...20 mA 4 = 4...20 mA with lockout at I <4 mA 5 = 4...20 mA	Edit	0	5	1	0	SO	SO

WARNING	
Parameter Num. : **41** **42** **60** **123** **140** **242** **243** **244** **245** **259.01**	**Adjustable parameters from SO or OEM levels for LME73.831AxBC**

Note: Specifications and data subject to change. Errors and omissions excepted.

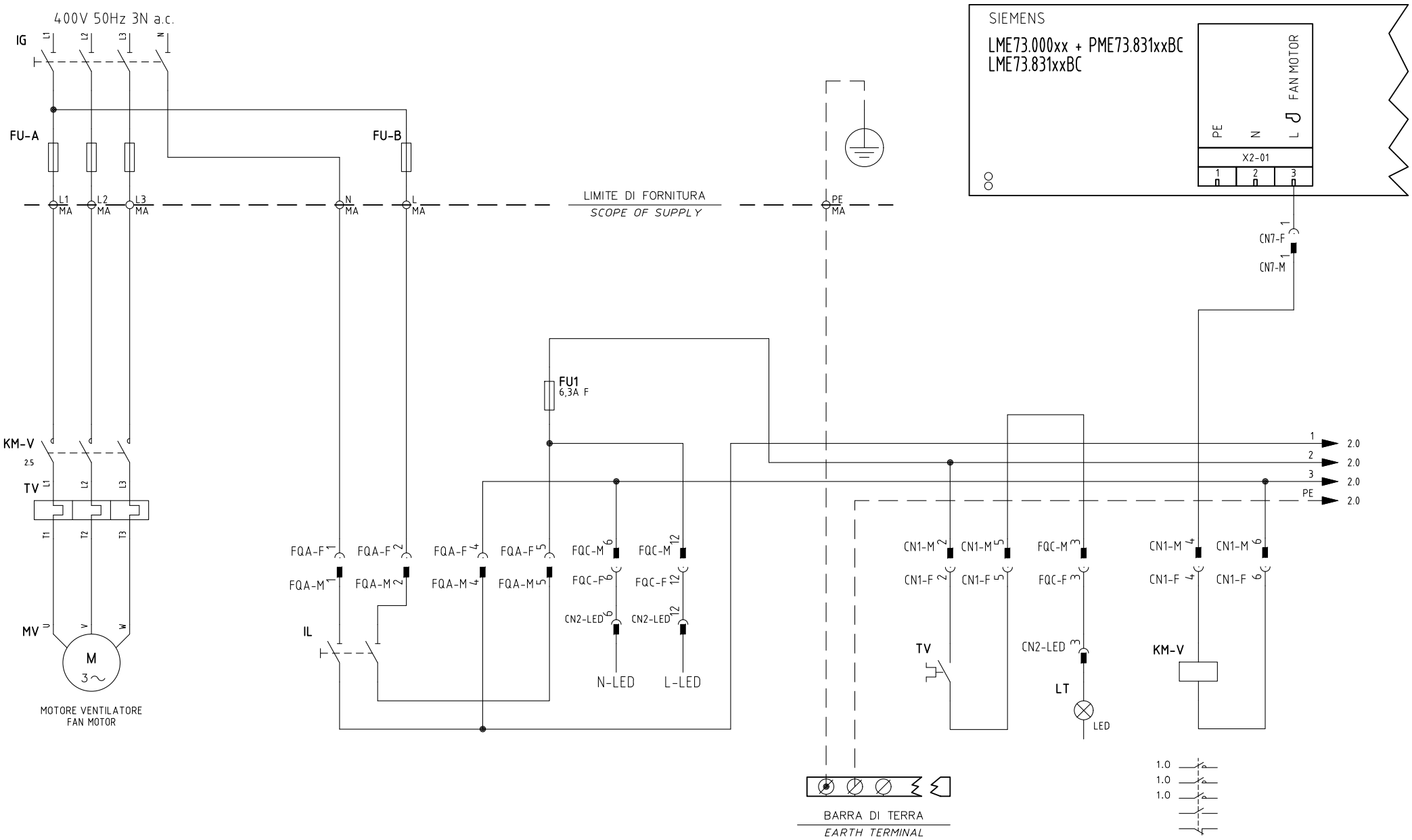

UNIGAS	Impianto TIPI/TYPES R91A ÷ R520A / TP91A÷TP520A MODELLO/MODEL x−.PR(MD).S.xx.A.1.xx	Ordine		Data 22/05/2015	PREC. /	FOGLIO 1
		Commessa	Data Controllato 22/05/2015	Revisione 00		
	Descrizione LME73.xx + COD. 6100573 + COD. 6100566	Esecutore U. PINTON	Controllato G. SCATTOLIN	Dis. N. 09 − 0431	SEGUE 2	TOTALE 12

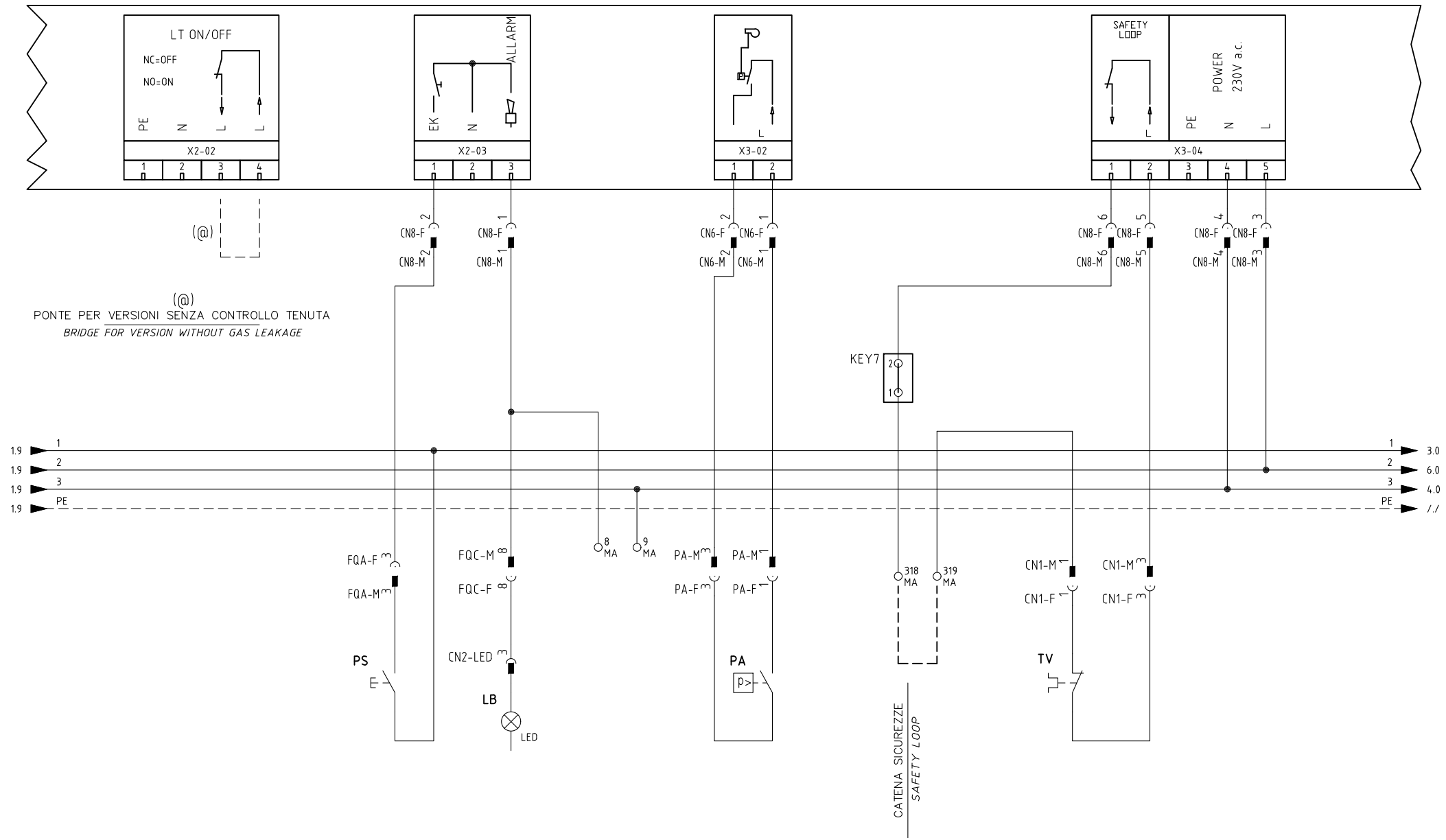

(@)
PONTE PER VERSIONI SENZA CONTROLLO TENUTA
BRIDGE FOR VERSION WITHOUT GAS LEAKAGE

Data 22/05/2015		PREC.	FOGLIO
Revisione 00		1	2
Dis. N. 09 – 0431		SEGUE	TOTALE
		3	12

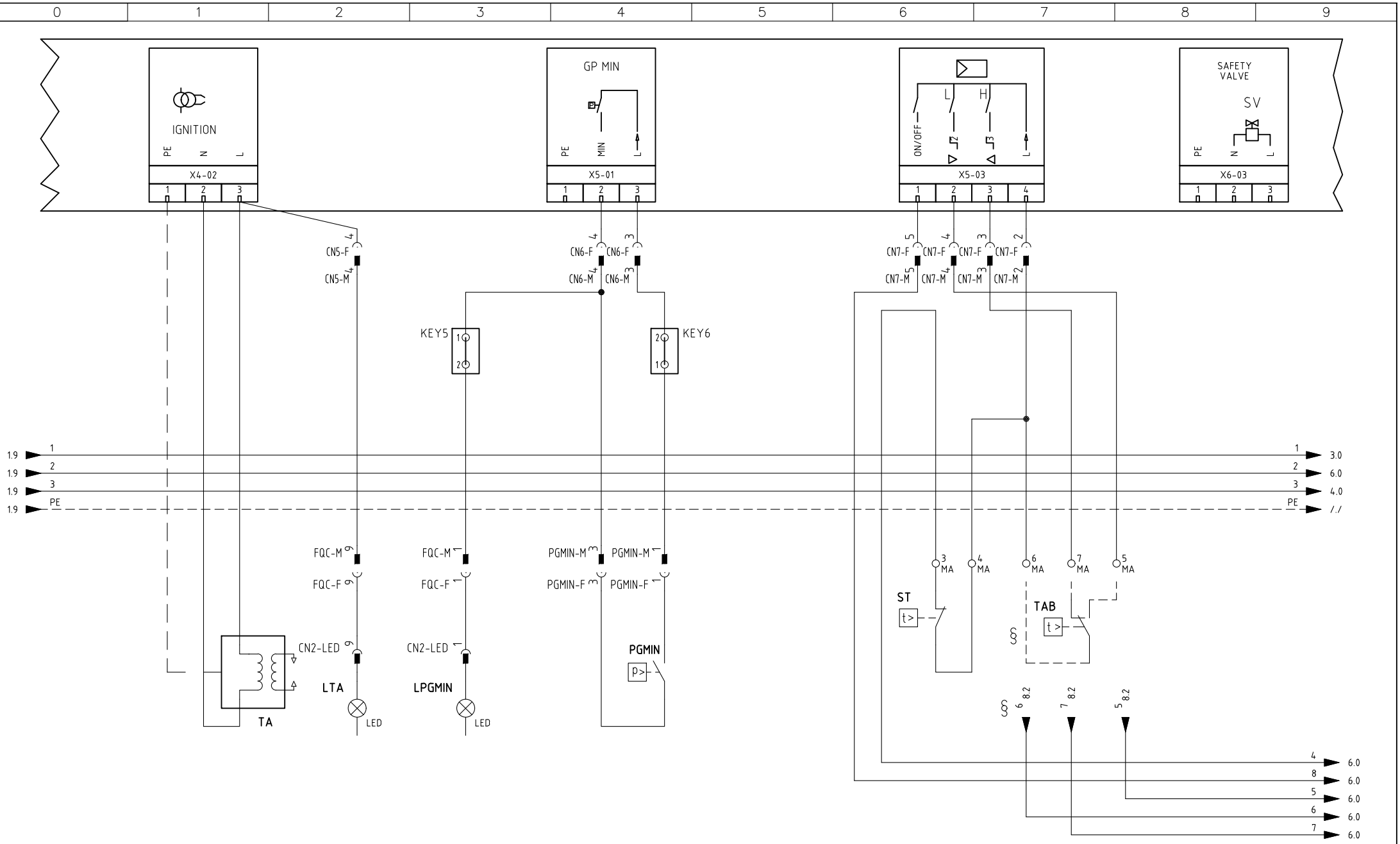

§

VERSIONE (PR) / VERSIONE (MD) CON RWF.. / 600V / KM3

(PR) VERSION / (MD) VERSION WITH RWF.. / 600V / KM3

Data 22/05/2015		PREC.	FOGLIO
Revisione 00		2	3
Dis. N. 09 – 0431		SEGUE	TOTALE
		4	12

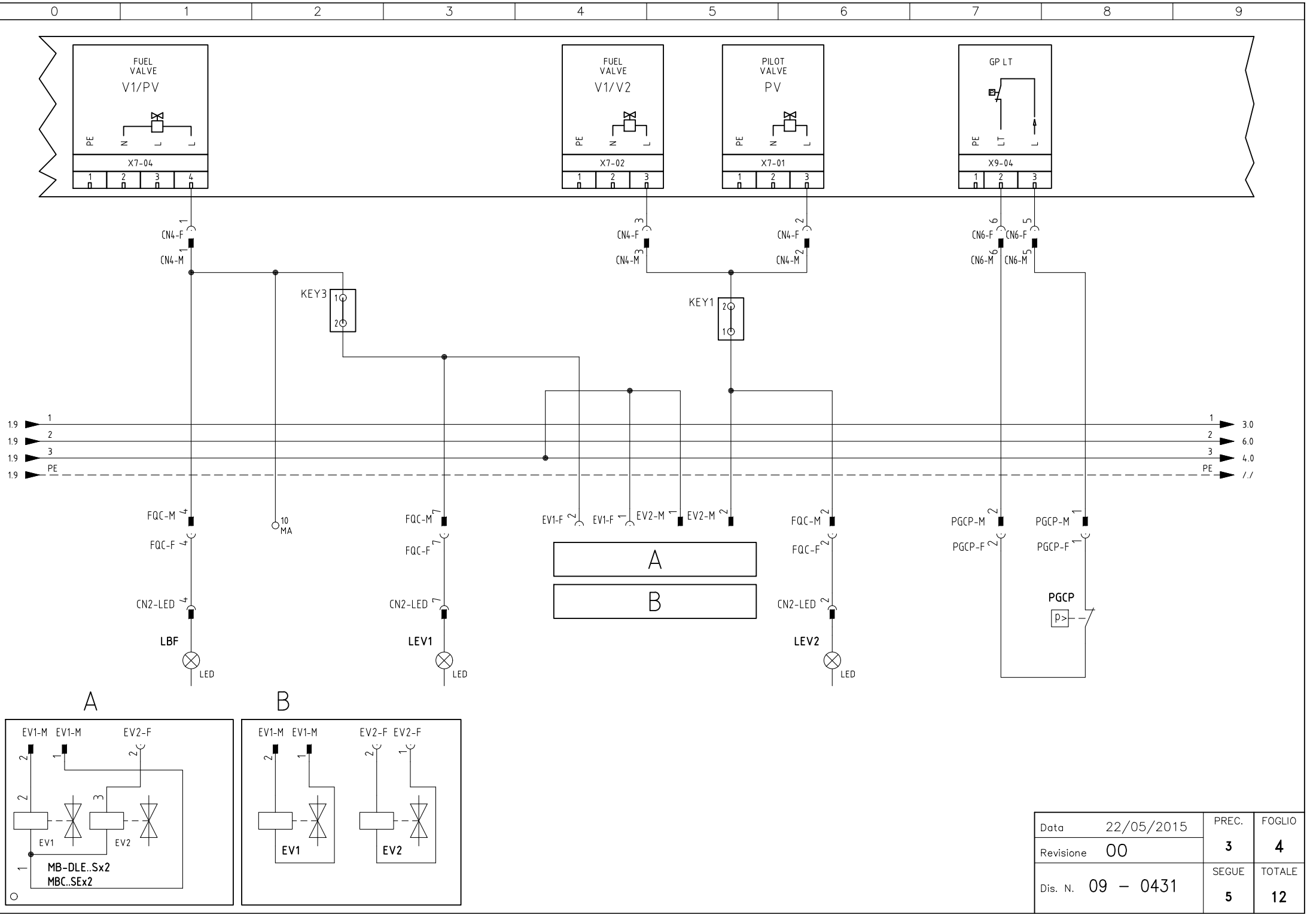

Data 22/05/2015		PREC. 3	FOGLIO 4
Revisione 00			
Dis. N. 09 – 0431		SEGUE 5	TOTALE 12

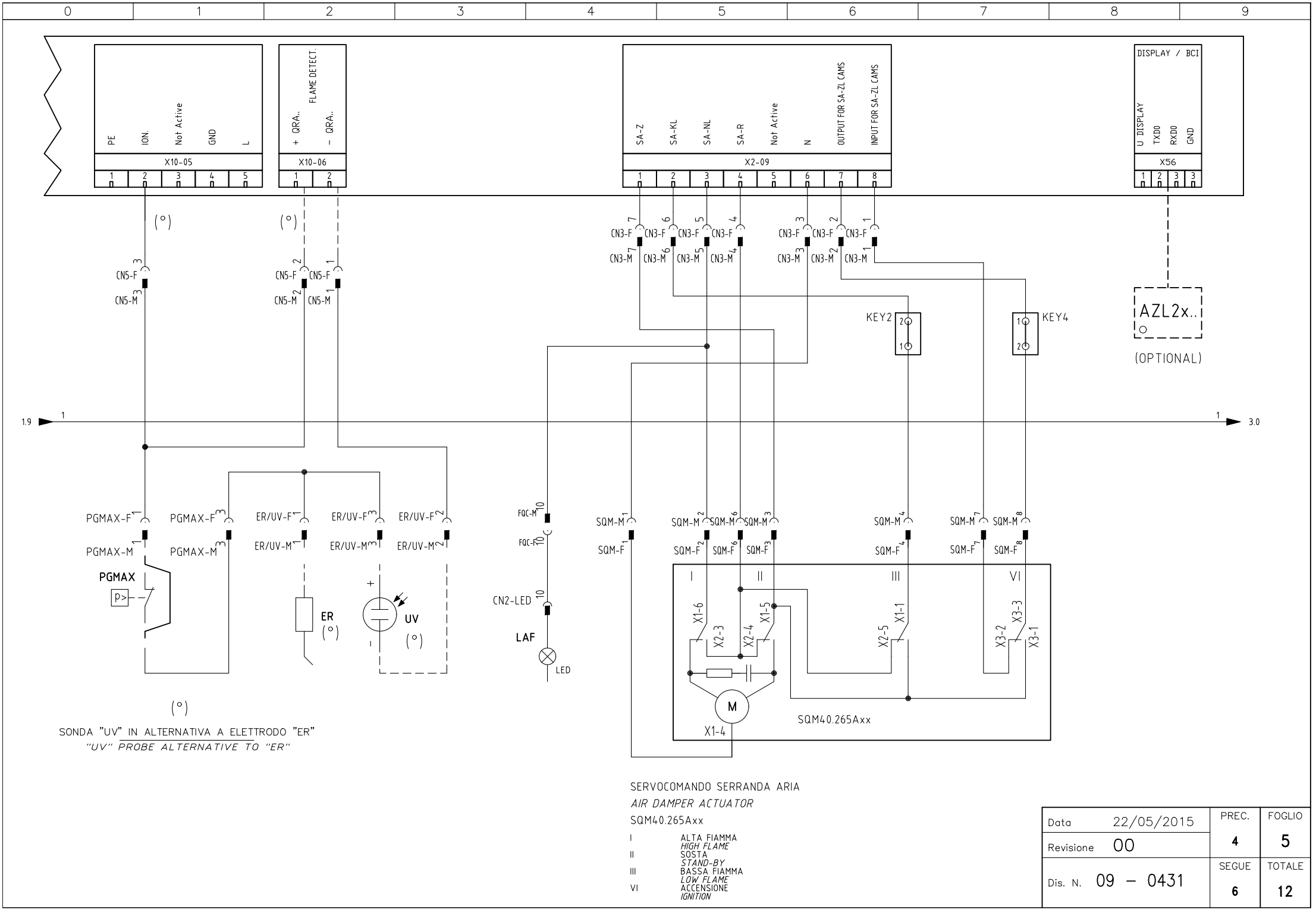

(°)

SONDA "UV" IN ALTERNATIVA A ELETTRODO "ER"

"UV" PROBE ALTERNATIVE TO "ER"

SERVOCOMANDO SERRANDA ARIA

AIR DAMPER ACTUATOR

SQM40.265Axx

I	ALTA FIAMMA *HIGH FLAME*
II	SOSTA *STAND-BY*
III	BASSA FIAMMA *LOW FLAME*
VI	ACCENSIONE *IGNITION*

Data	22/05/2015	PREC.	FOGLIO
Revisione	00	4	5
Dis. N.	09 – 0431	SEGUE	TOTALE
		6	12

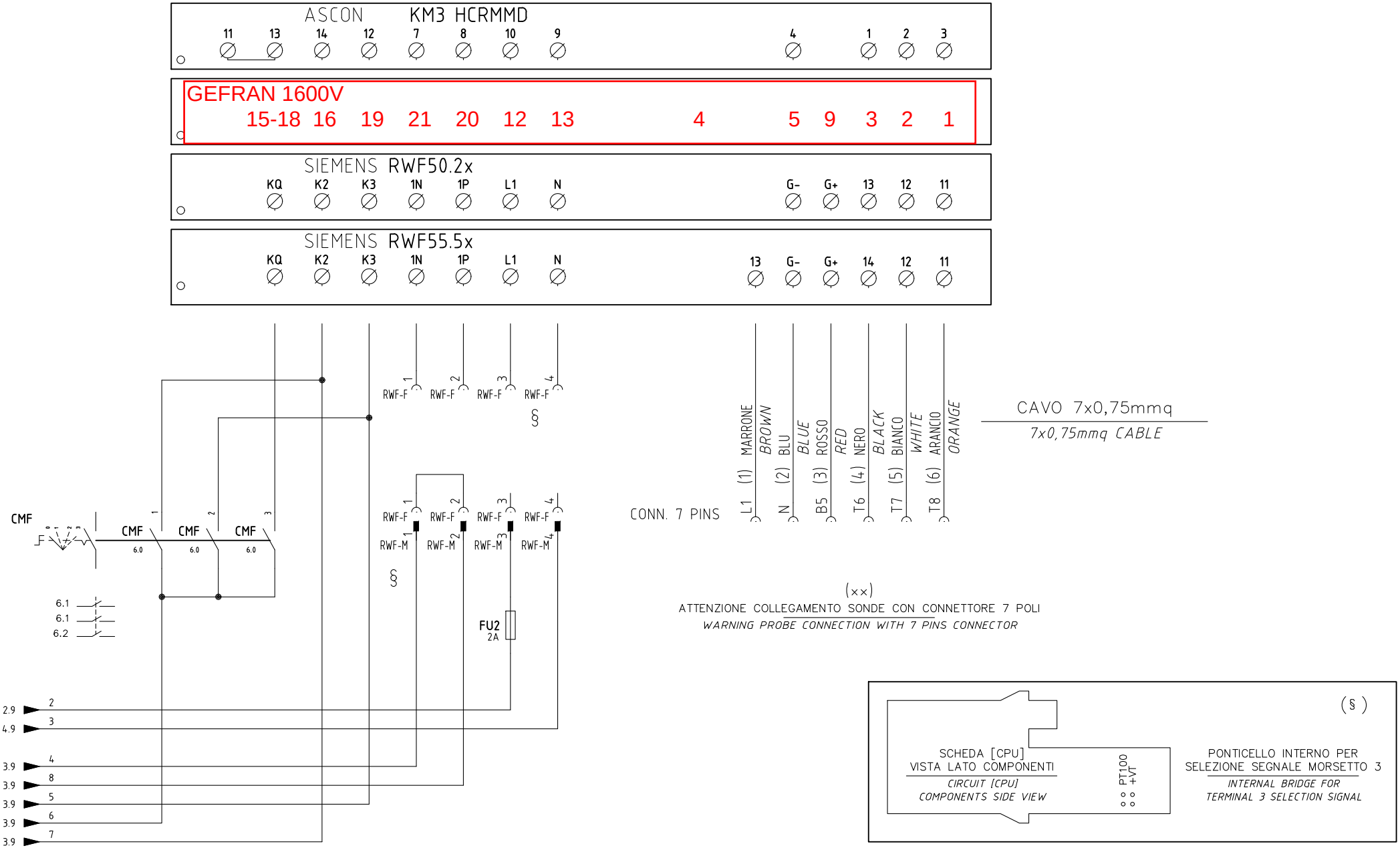

§
VERSIONE (PR) / VERSIONE (MD) CON RWF.. / 600V / KM3
(PR) VERSION / (MD) VERSION WITH RWF.. / 600V / KM3

Data 22/05/2015		PREC. 5	FOGLIO 6
Revisione 00			
Dis. N. 09 – 0431		SEGUE 7	TOTALE 12

(××)

ATTENZIONE COLLEGAMENTO SONDE CON CONNETTORE 7 POLI

WARNING PROBE CONNECTION WITH 7 PINS CONNECTOR

KM3 HCRMMD

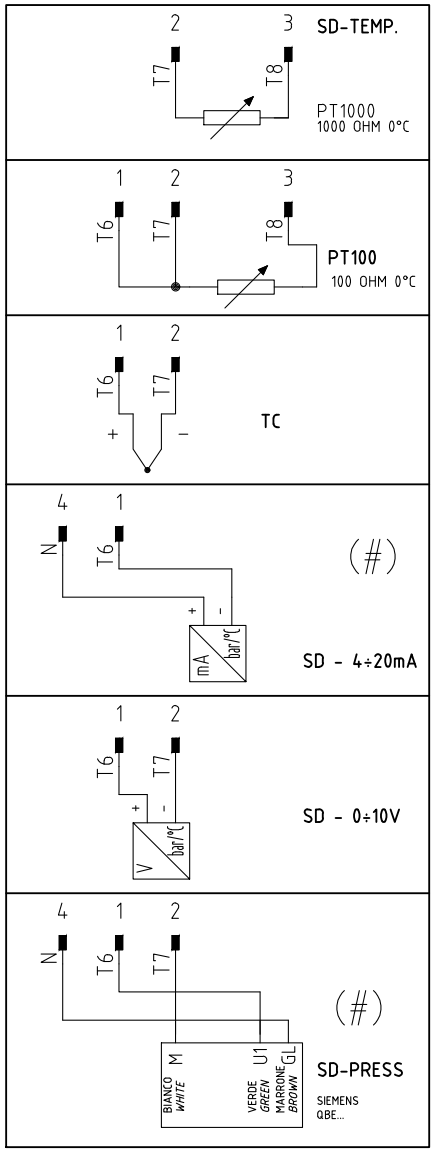

600V RRR0-1-T73

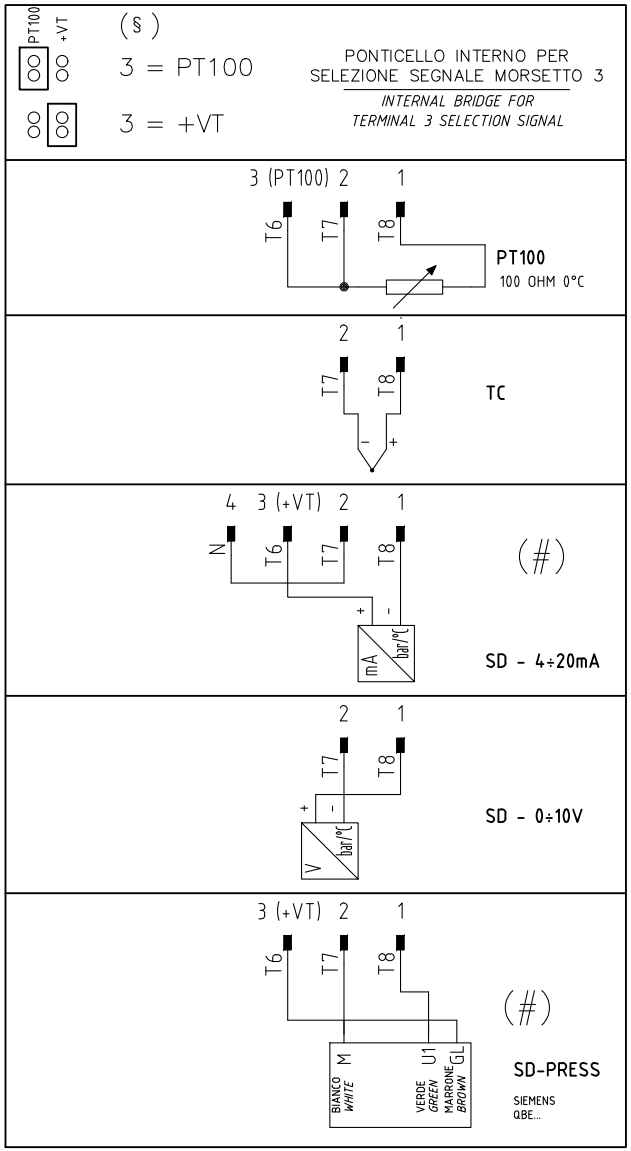

RWF55.5x

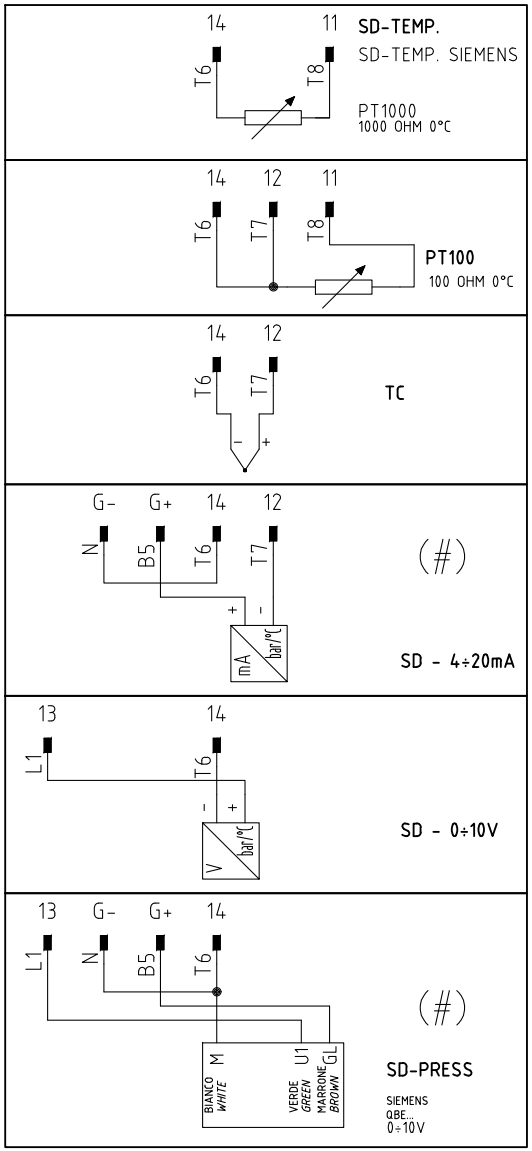

RWF50.2x

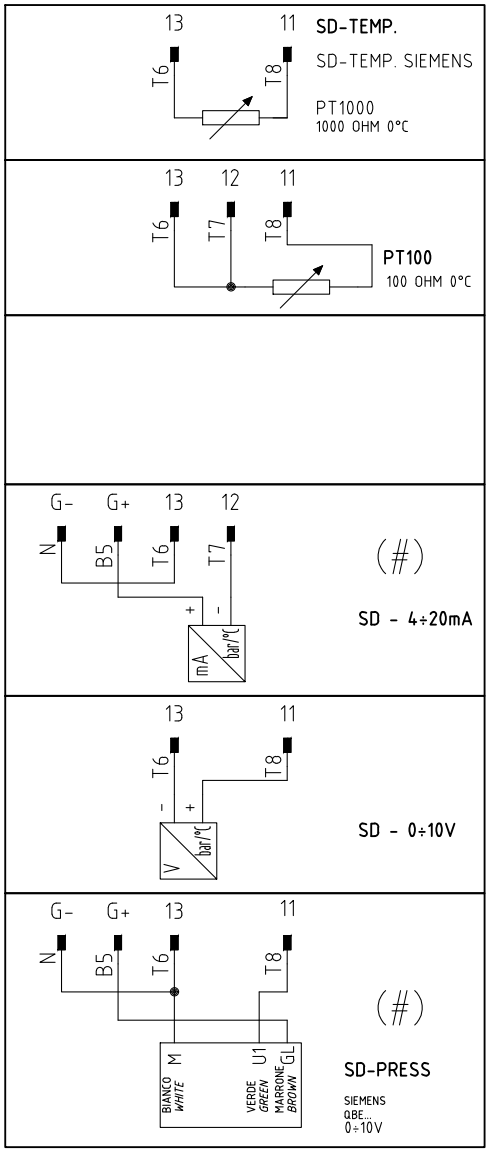

(#)

COLLEGAMENTO SOLO PER TRASDUTTORI PASSIVI

TRASDUCER PASSIVE CONNECTION ONLY

Data 22/05/2015		PREC.	FOGLIO
Revisione 00		6	7
Dis. N. 09 – 0431		SEGUE	TOTALE
		8	12

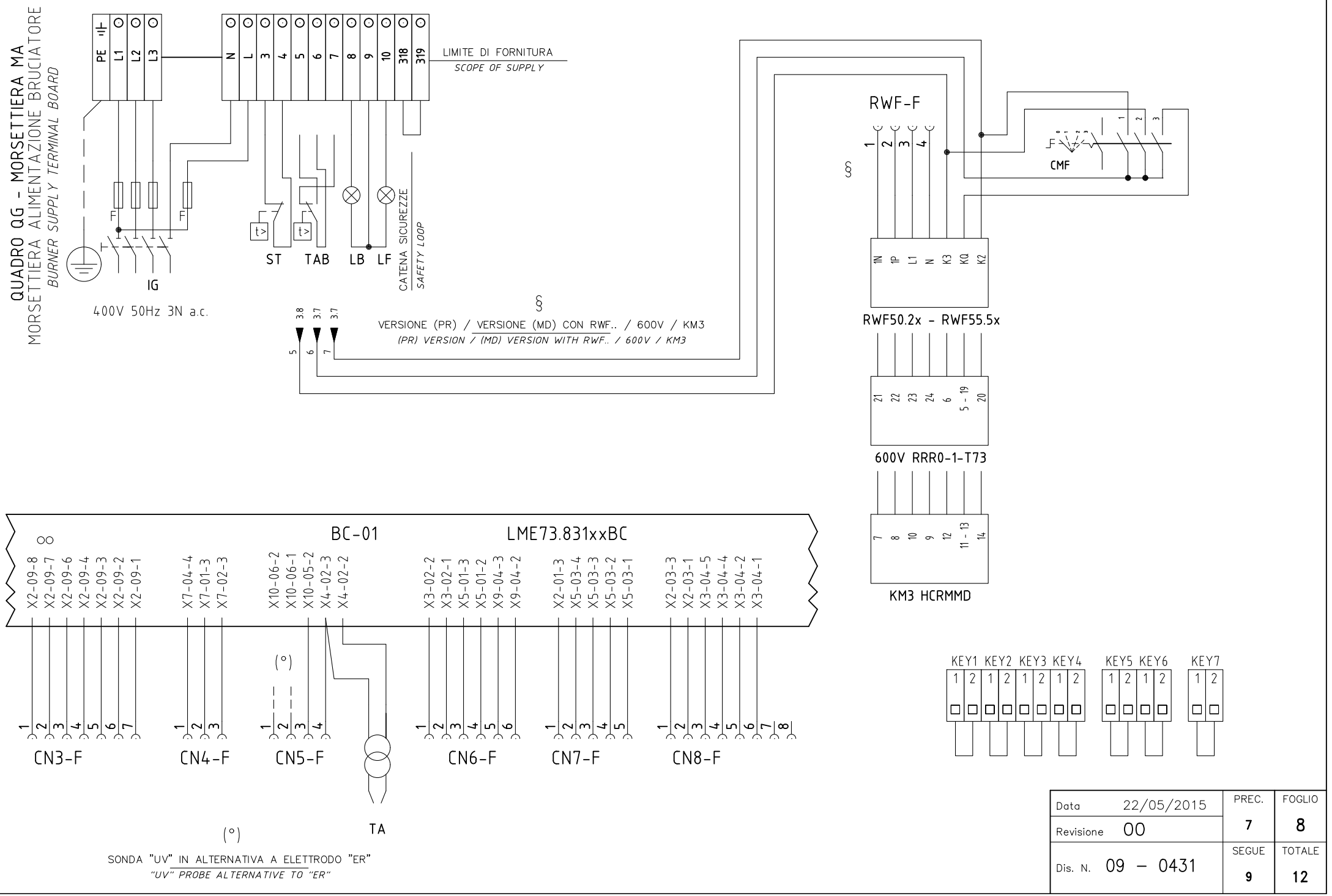

Data 22/05/2015		PREC. 7	FOGLIO 8
Revisione 00			
Dis. N. 09 – 0431		SEGUE 9	TOTALE 12

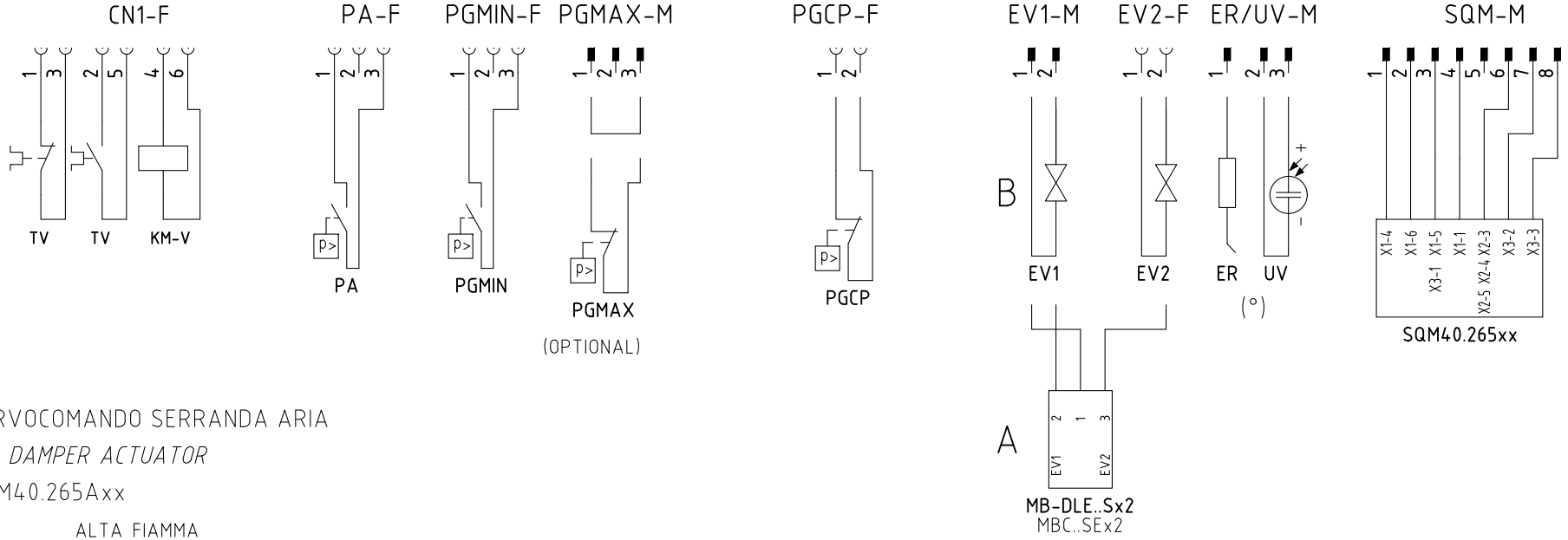

SERVOCOMANDO SERRANDA ARIA

AIR DAMPER ACTUATOR

SQM40.265Axx

I	ALTA FIAMMA *HIGH FLAME*
II	SOSTA *STAND-BY*
III	BASSA FIAMMA *LOW FLAME*
VI	ACCENSIONE *IGNITION*

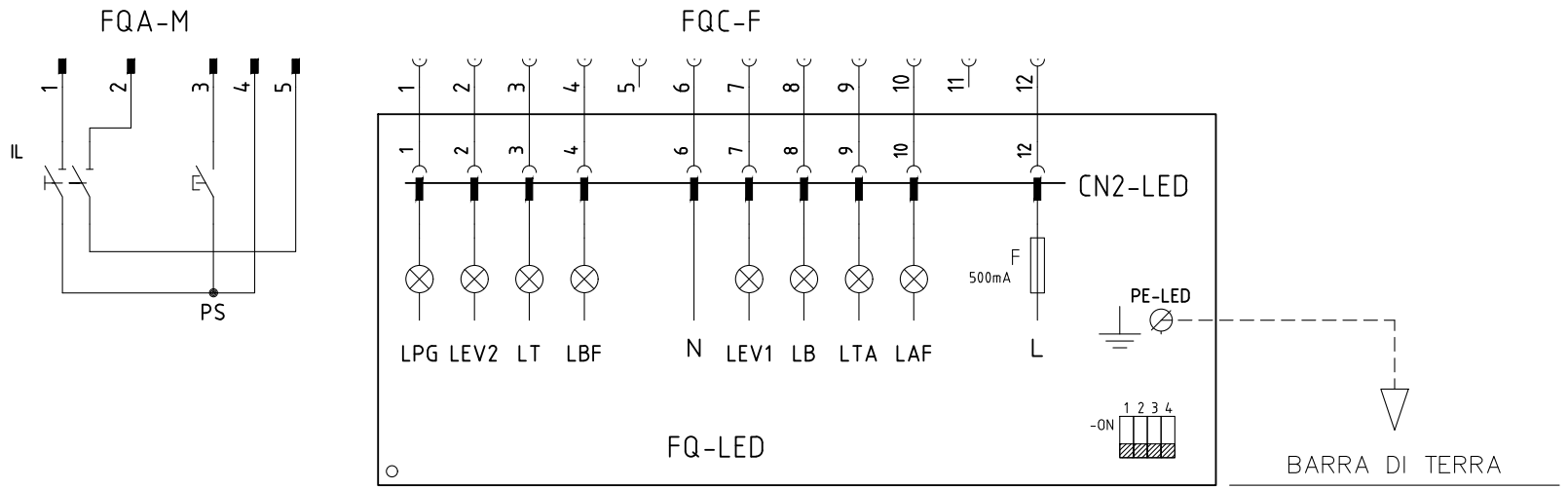

(°)

SONDA "UV" IN ALTERNATIVA A ELETTRODO "ER"

"UV" PROBE ALTERNATIVE TO "ER"

Data 22/05/2015		PREC. 8	FOGLIO 9
Revisione 00			
Dis. N. 09 – 0431		SEGUE 10	TOTALE 12

0	1	2	3	4	5	6	7	8	9

Sigla/Item	Foglio/Sheet	Funzione	Function
600V RRR0-1-T73	6	REGOLATORE MODULANTE (ALTERNATIVO)	BURNER MODULATOR (ALTERNATIVE)
AZL2x..	5	INTERFACCIA UTENTE	USER INTERFACE
CMF	6	COMMUT. MANUALE FUNZ. 0)FERMO 1)ALTA FIAMMA 2)BASSA FIAMMA 3)AUTOMATICO	MANUAL SWITCH 0)OFF 1)HIGH FLAME 2)LOW FLAME 3)AUTOMATIC
ER	5	ELETTRODO RILEVAZIONE FIAMMA	FLAME DETECTION ELECTRODE
EV1	4	ELETTROVALVOLA GAS LATO RETE	UPSTREAM GAS SOLENOID VALVE
EV2	4	ELETTROVALVOLA GAS LATO BRUCIATORE	DOWNSTREAM GAS SOLENOID VALVE
FQ-LED	9	PANNELLO FRONTALE (LED)	FRONT PANEL (LED)
FQ-LED	8	PANNELLO FRONTALE (LED)	FRONT PANEL (LED)
FU1	1	FUSIBILE AUSILIARIO	AUXILIARY FUSE
FU2	6	FUSIBILE	FUSE
FU-A	1	FUSIBILI DI LINEA	LINE FUSES
FU-B	1	FUSIBILE DI LINEA	LINE FUSE
IG	1	INTERRUTTORE GENERALE	MAINS SWITCH
IL	1	INTERRUTTORE LINEA AUSILIARI	AUXILIARY LINE SWITCH
KM3 HCRMMD	6	REGOLATORE MODULANTE (ALTERNATIVO)	BURNER MODULATOR (ALTERNATIVE)
KM-V	1	CONTATTORE MOTORE VENTILATORE	FAN MOTOR CONTACTOR
LAF	5	LAMPADA SEGNALAZIONE ALTA FIAMMA BRUCIATORE	BURNER IN HIGH FLAME INDICATOR LIGHT
LB	2	LAMPADA SEGNALAZIONE BLOCCO BRUCIATORE	INDICATOR LIGHT FOR BURNER LOCK-OUT
LBF	4	LAMPADA SEGNALAZIONE BASSA FIAMMA BRUCIATORE	BURNER IN LOW FLAME INDICATOR LIGHT
LEV1	4	LAMPADA SEGNALAZIONE APERTURA [EV1]	INDICATOR LIGHT FOR OPENING OF ELECTRO-VALVE [EV1]
LEV2	4	LAMPADA SEGNALAZIONE APERTURA [EV2]	INDICATOR LIGHT FOR OPENING OF ELECTRO-VALVE [EV2]
LME73.000xx + PME73.831xxBC	1	APPARECCHIATURA DI COMANDO	CONTROL SCHEME
LME73.831xxBC	1	APPARECCHIATURA DI COMANDO	CONTROL SCHEME
LPGMIN	3	LAMPADA SEGNALAZIONE PRESENZA GAS IN RETE	INDICATOR LIGHT FOR PRESENCE OF GAS IN THE NETWORK
LT	1	LAMPADA SEGNALAZIONE BLOCCO TERMICO MOTORE VENTILATORE	INDICATOR LIGHT FOR FAN MOTOR OVERLOAD THERMAL CUTOUT
LTA	3	LAMPADA SEGNALAZIONE TRASFORMATORE DI ACCENSIONE	IGNITION TRANSFORMER INDICATOR LIGHT
MB-DLE..Sx2	4	GRUPPO VALVOLE GAS	GAS VALVES GROUP
MBC..SEx2	4	GRUPPO VALVOLE GAS (ALTERNATIVO)	GAS VALVES GROUP (ALTERNATIVE)
MV	1	MOTORE VENTILATORE	FAN MOTOR
PA	2	PRESSOSTATO ARIA	AIR PRESSURE SWITCH
PGCP	4	PRESSOSTATO GAS CONTROLLO PERDITE	GAS LEAKAGE PRESSURE SWITCH
PGMAX	5	PRESSOSTATO GAS DI MASSIMA PRESSIONE (OPTIONAL)	MAXIMUM PRESSURE GAS SWITCH (OPTIONAL)

Data 22/05/2015		PREC.	FOGLIO
Revisione 00		9	10
Dis. N. 09 – 0431		SEGUE	TOTALE
		11	12

0	1	2	3	4	5	6	7	8	9

Sigla/Item	Foglio/Sheet	Funzione	Function
PGMIN	3	PRESSOSTATO GAS DI MINIMA PRESSIONE	MINIMUM GAS PRESSURE SWITCH
PS	2	PULSANTE SBLOCCO FIAMMA	FLAME UNLOCK BUTTON
PT100	7	SONDA DI TEMPERATURA	TEMPERATURE PROBE
RWF50.2x	6	REGOLATORE MODULANTE	BURNER MODULATOR
RWF55.5x	6	REGOLATORE MODULANTE (ALTERNATIVO)	BURNER MODULATOR (ALTERNATIVE)
SD-PRESS	7	SONDA DI PRESSIONE	PRESSURE PROBE
SD-TEMP.	7	SONDA DI TEMPERATURA	TEMPERATURE PROBE
SD - 0÷10V	7	TRASDUTTORE USCITA IN TENSIONE	TRANSDUCER VOLTAGE OUTPUT
SD - 4÷20mA	7	TRASDUTTORE USCITA IN CORRENTE	TRANSDUCER CURRENT OUTPUT
SQM40.265Axx	5	SERVOCOMANDO SERRANDA ARIA	AIR DAMPER ACTUATOR
ST	3	SERIE TERMOSTATI/PRESSOSTATI	SERIES OF THERMOSTATS OR PRESSURE SWITCHES
TA	3	TRASFORMATORE DI ACCENSIONE	IGNITION TRANSFORMER
TAB	3	TERMOSTATO/PRESSOSTATO ALTA-BASSA FIAMMA	HIGH-LOW THERMOSTAT/PRESSURE SWITCHES
TC	7	TERMOCOPPIA	THERMOCOUPLE
TV	1	TERMICO MOTORE VENTILATORE	FAN MOTOR THERMAL
UV	5	SONDA UV RILEVAZIONE FIAMMA	UV FLAME DETECTOR

Data 22/05/2015		PREC.	FOGLIO
Revisione 00		10	11
Dis. N. 09 – 0431		SEGUE	TOTALE
		12	12

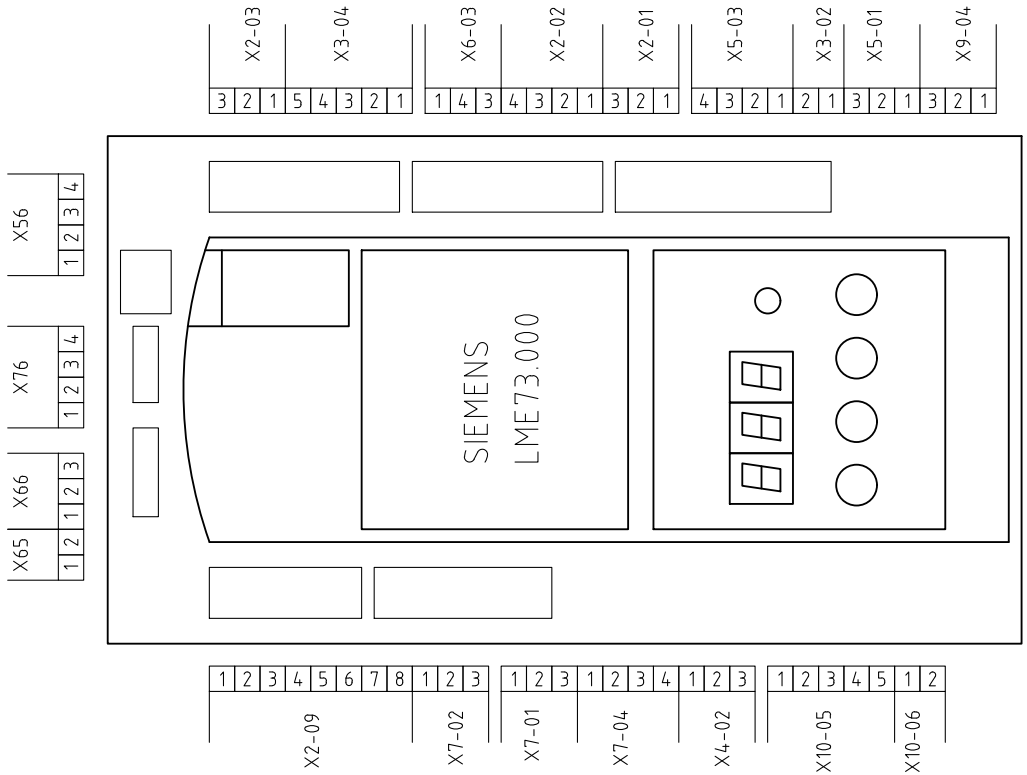

VISTA LATO COMPONENTI

COMPONENTS SIDE VIEW

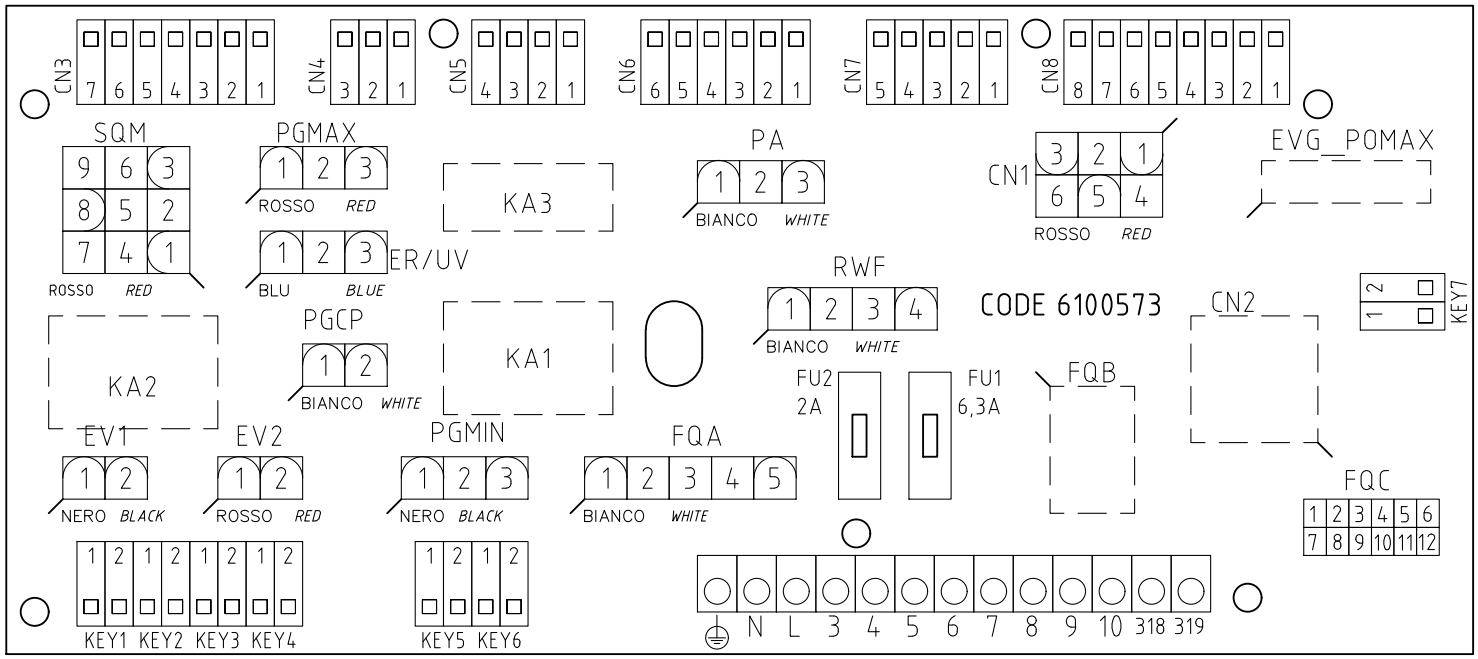

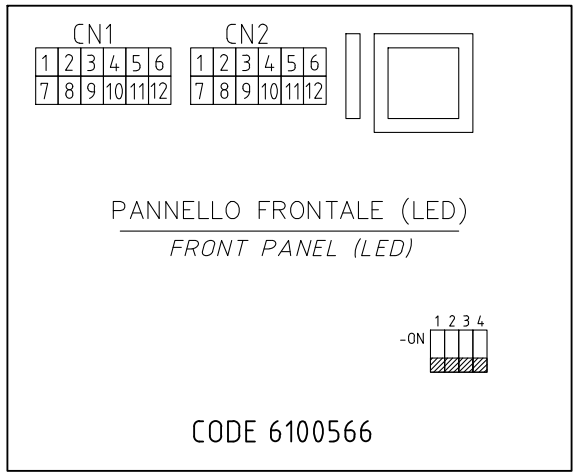

Data 22/05/2015		PREC.	FOGLIO
Revisione 00		11	12
Dis. N. 09 – 0431		SEGUE	TOTALE
		/	12

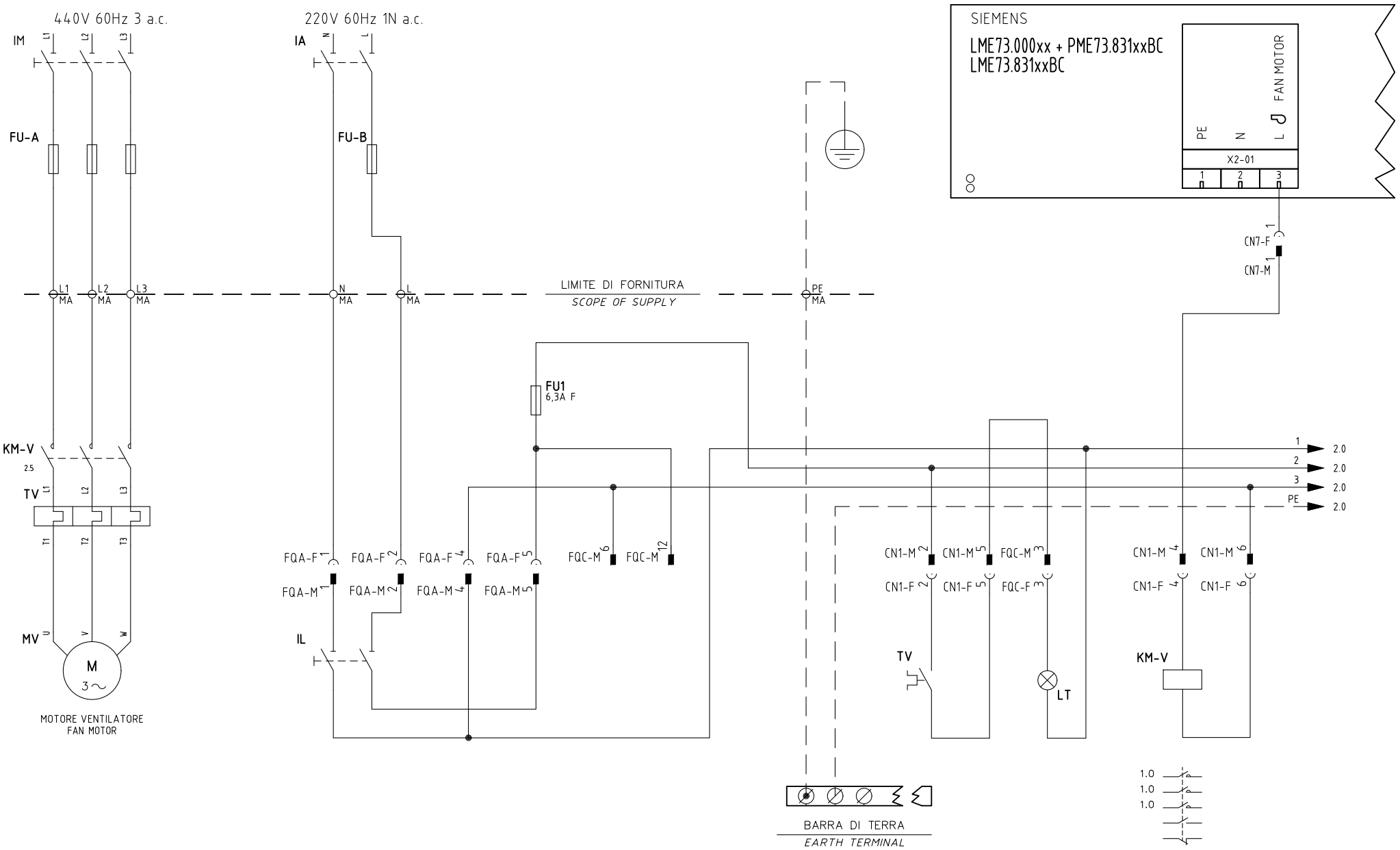

				UNIGAS	Impianto: TIPI/TYPES P61÷P73A / R91A ÷ R520A / TP91A÷TP520A MODELLO/MODEL x−.PR(MD).S.xx.A.1.xx	Ordine		Data 30/09/2014	PREC. /	FOGLIO 1
						Commessa	Data Controllato 11/07/2016	Revisione 01		
01	RWF40.0x0 MODULATOR ADDED	25/11/15	U. PINTON		Descrizione: WITH LME73.xx + CIRCUIT 6100573 (AND MODULATOR RWF40.0x0 / RWF55.x / RWF50.2x / 600V / KM3)	Esecutore U. PINTON	Controllato G. SCATTOLIN	Dis. N. 09−0419 − A	SEGUE 2	TOTALE 13
REV.	MODIFICA	DATA	FIRME							

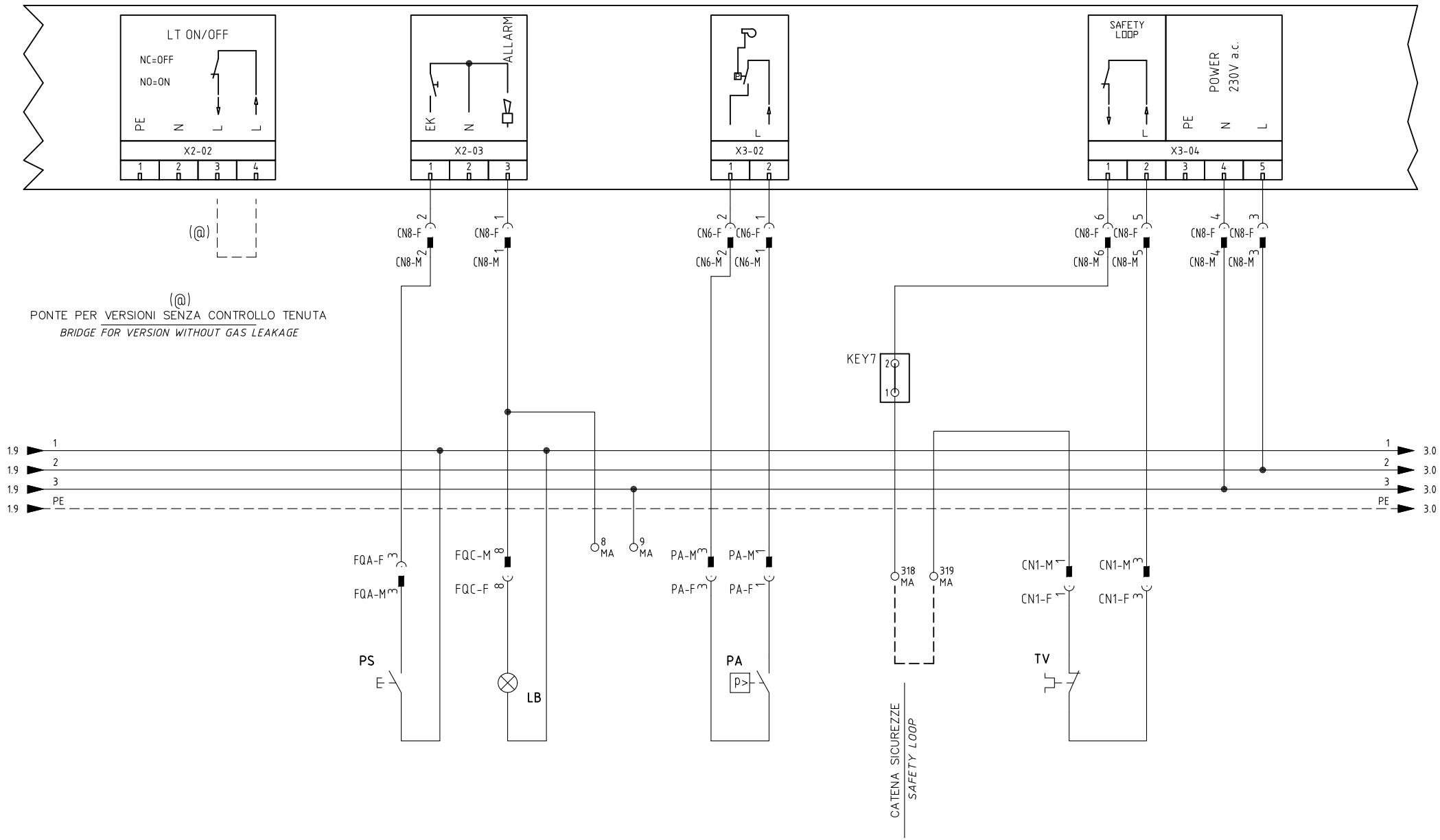

Data 30/09/2014		PREC.	FOGLIO
Revisione 01		1	2
Dis. N. 09-0419 – A		SEGUE	TOTALE
		3	13

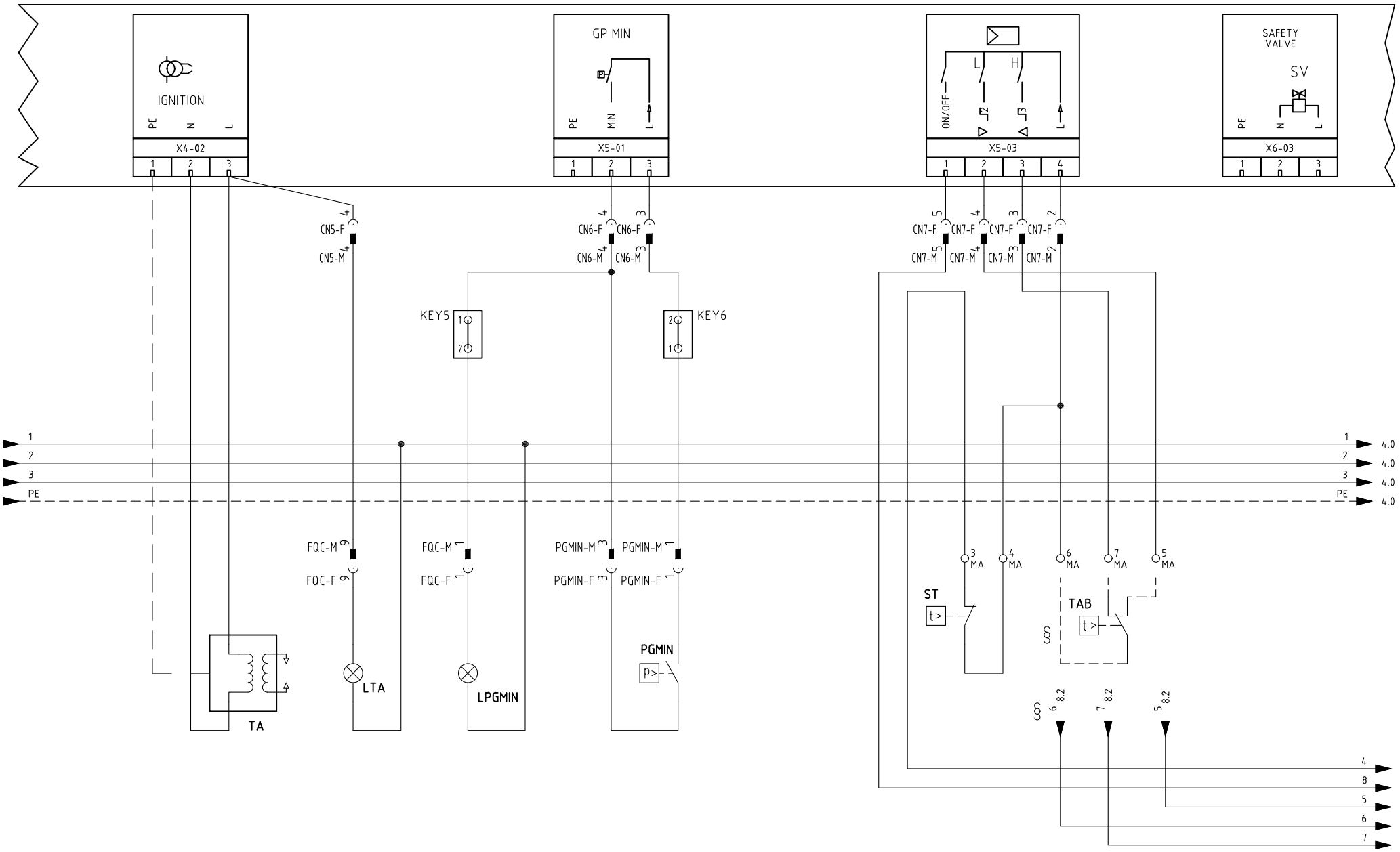

§

VERSIONE (PR) / VERSIONE (MD) CON RWF.. / 600V / KM3

(PR) VERSION / (MD) VERSION WITH RWF.. / 600V / KM3

Data 30/09/2014		PREC.	FOGLIO
Revisione 01		2	3
Dis. N. 09-0419 – A		SEGUE	TOTALE
		4	13

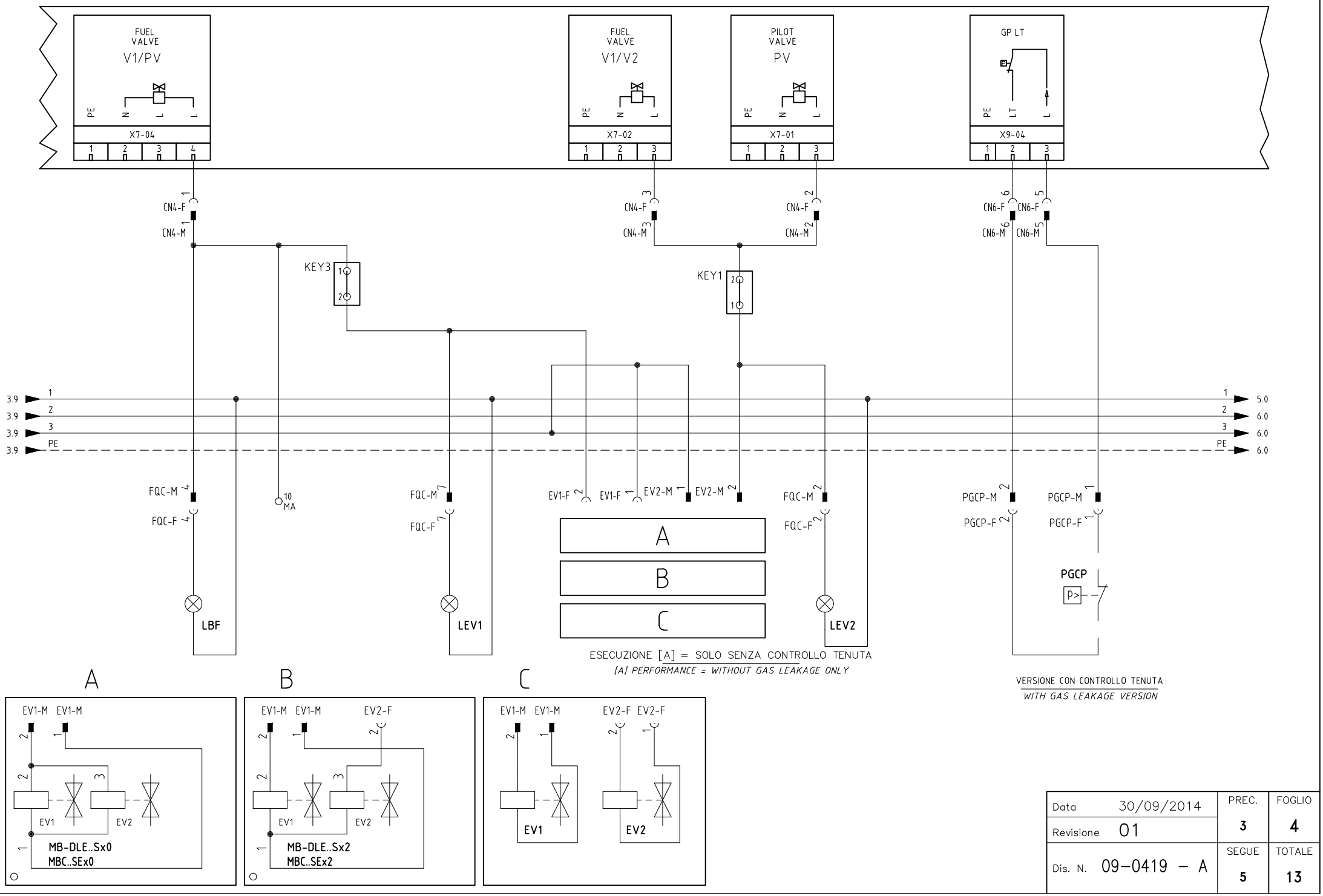

Data 30/09/2014		PREC. 3	FOGLIO 4
Revisione 01			
Dis. N. 09–0419 – A		SEGUE 5	TOTALE 13

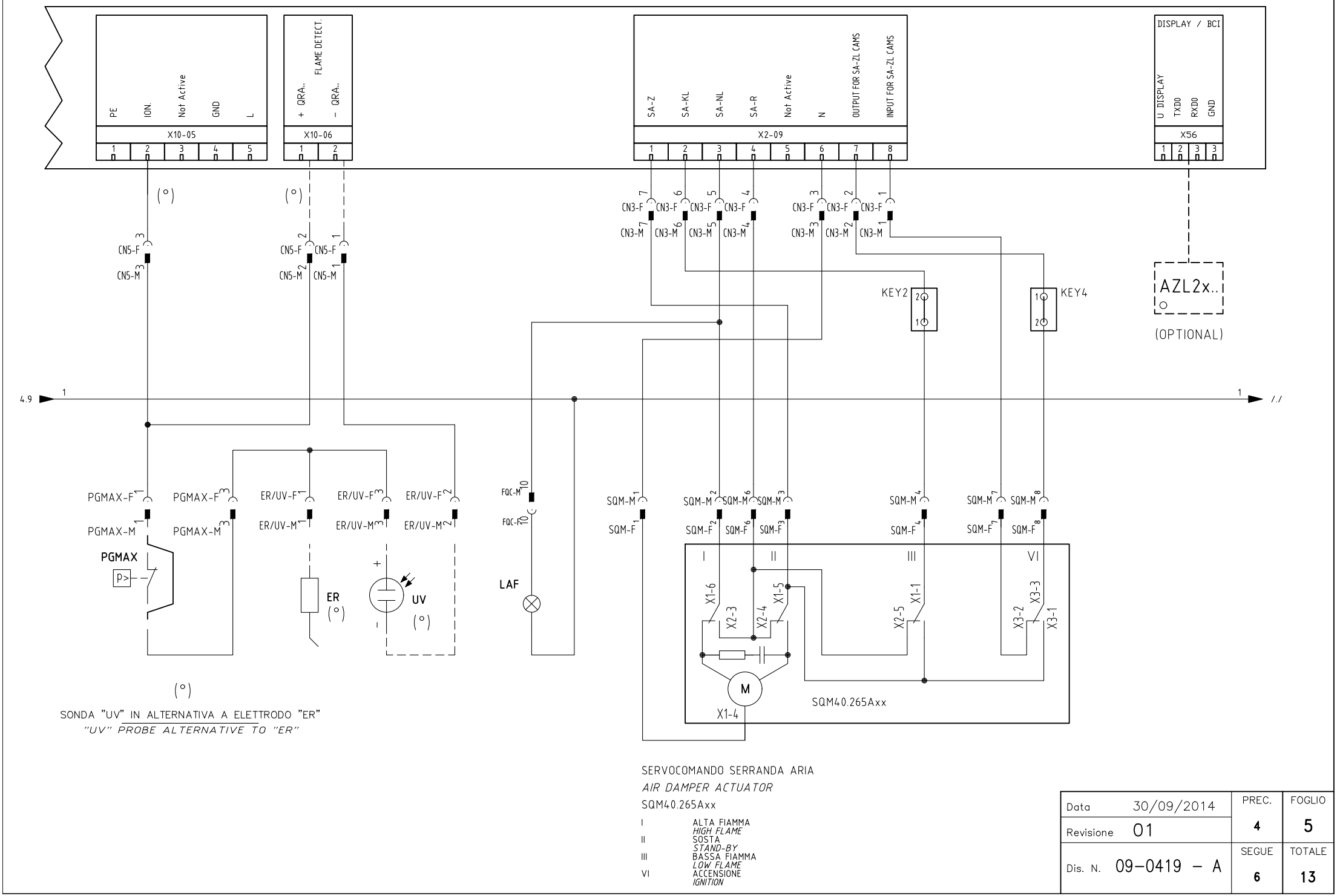

Data 30/09/2014		PREC.	FOGLIO
Revisione 01		4	5
Dis. N. 09-0419 – A		SEGUE	TOTALE
		6	13

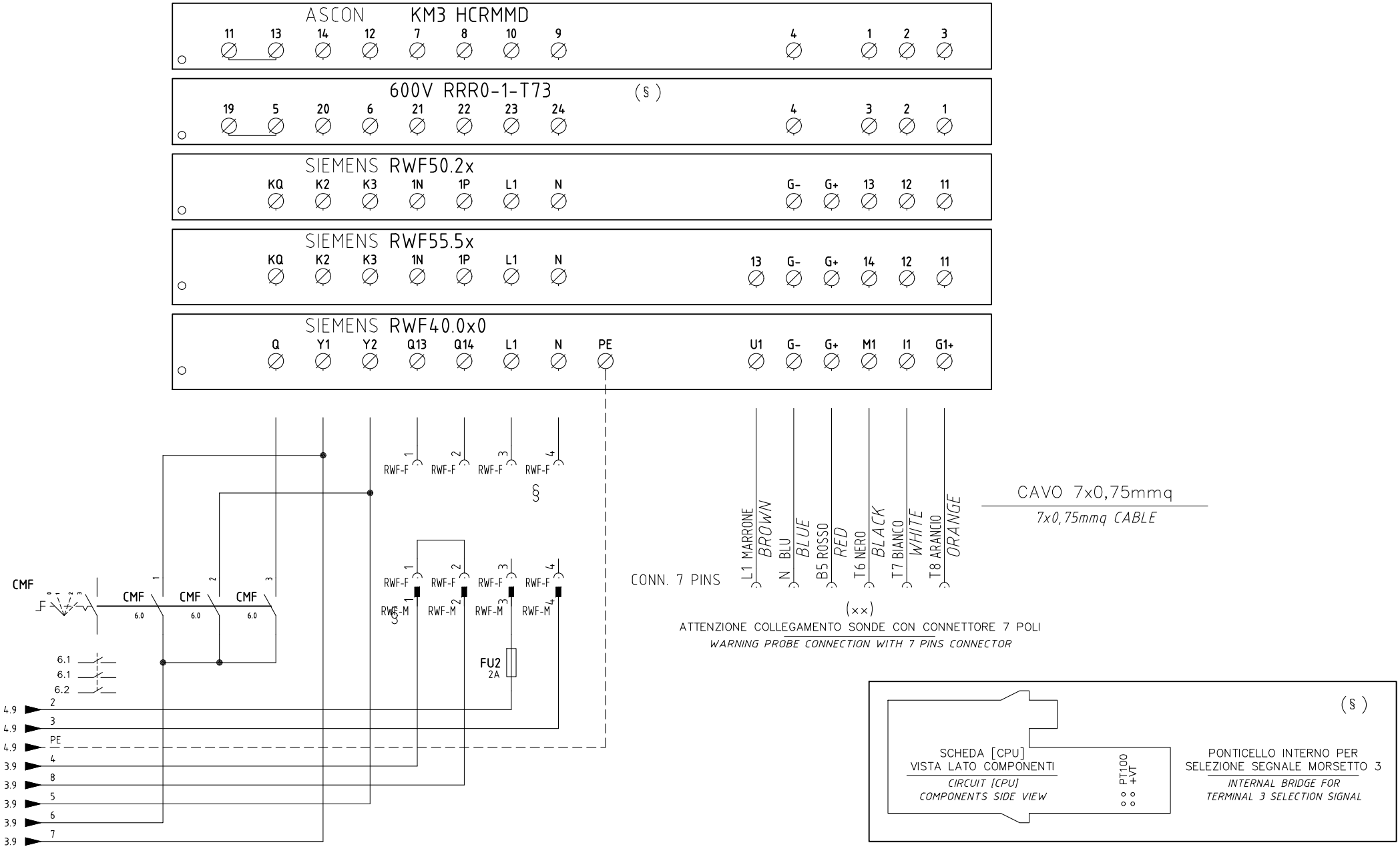

§
VERSIONE (PR) / VERSIONE (MD) CON RWF.. / 600V / KM3
(PR) VERSION / (MD) VERSION WITH RWF.. / 600V / KM3

Data 30/09/2014		PREC. 5	FOGLIO 6
Revisione 01			
Dis. N. 09-0419 – A		SEGUE 7	TOTALE 13

(××)
ATTENZIONE COLLEGAMENTO SONDE CON CONNETTORE 7 POLI
WARNING PROBE CONNECTION WITH 7 PINS CONNECTOR

KM3 HCRMMD

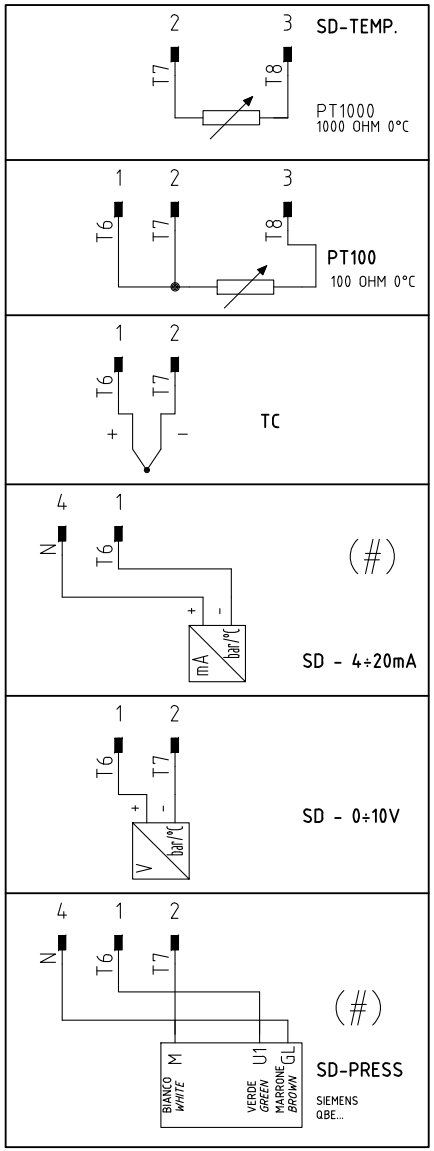

600V RRR0-1-T73

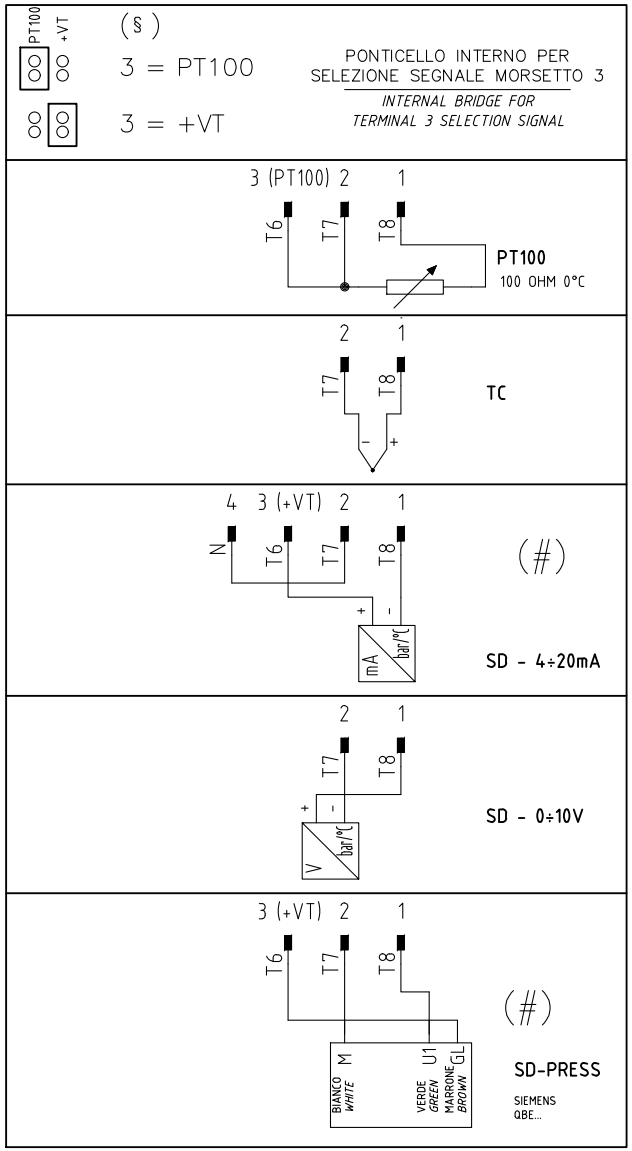

(#)
COLLEGAMENTO SOLO PER
TRASDUTTORI PASSIVI
TRASDUCER PASSIVE
CONNECTION ONLY

Data 30/09/2014		PREC. 6	FOGLIO 7
Revisione 01			
Dis. N. 09-0419 – A		SEGUE 8	TOTALE 13

(××)
ATTENZIONE COLLEGAMENTO SONDE CON CONNETTORE 7 POLI
WARNING PROBE CONNECTION WITH 7 PINS CONNECTOR

RWF40.0x0

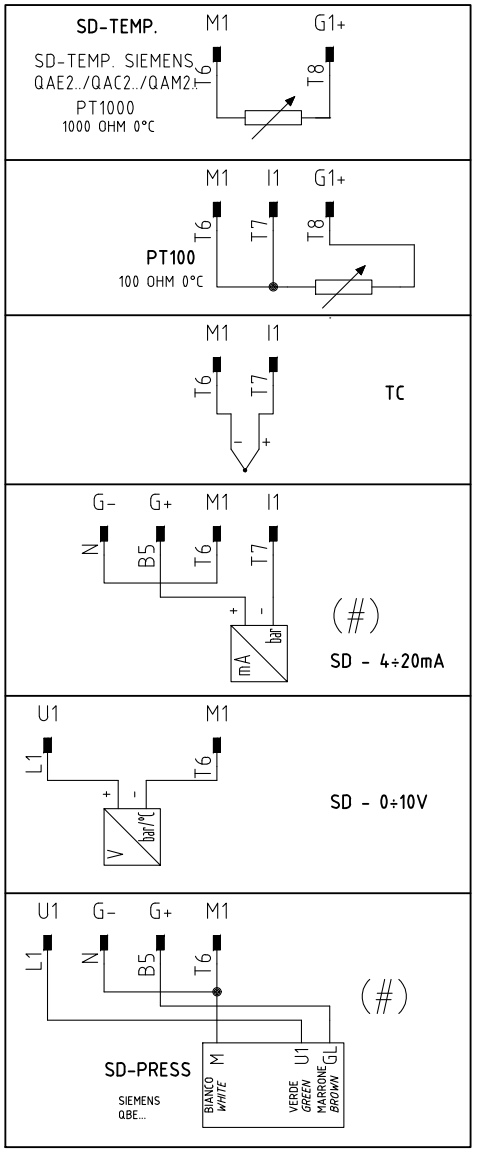

RWF55.5x

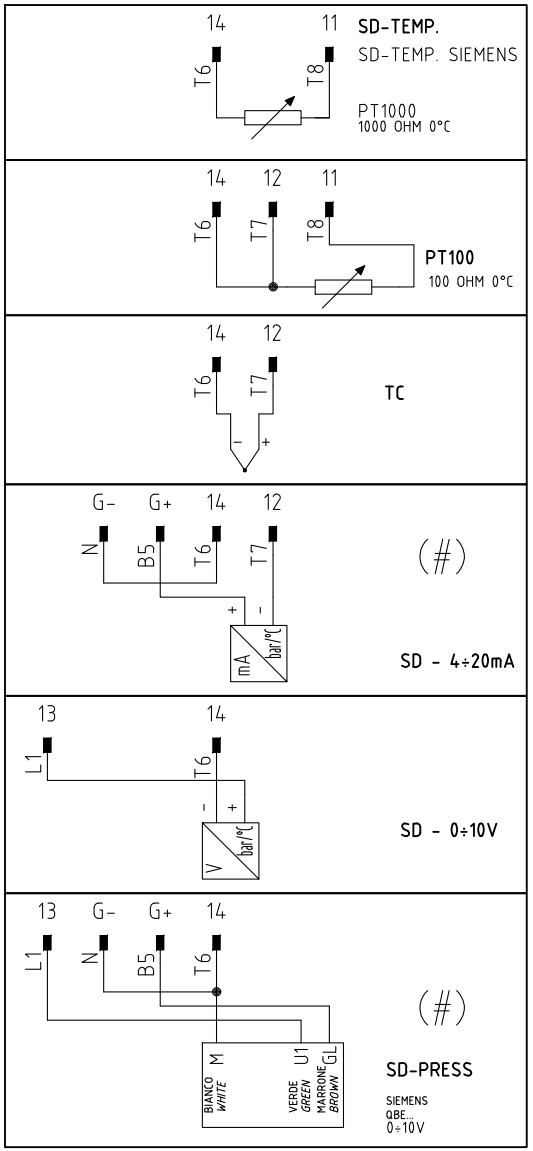

RWF50.2x

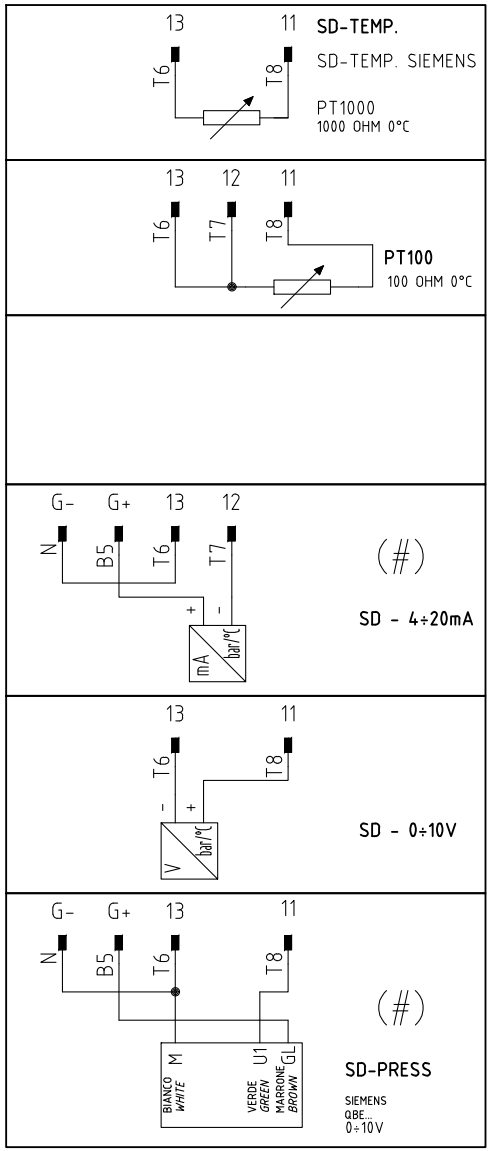

(#)
COLLEGAMENTO SOLO PER TRASDUTTORI PASSIVI
TRASDUCER PASSIVE CONNECTION ONLY

Data 30/09/2014		PREC. 7	FOGLIO 8
Revisione 01			
Dis. N. 09−0419 − A		SEGUE 9	TOTALE 13

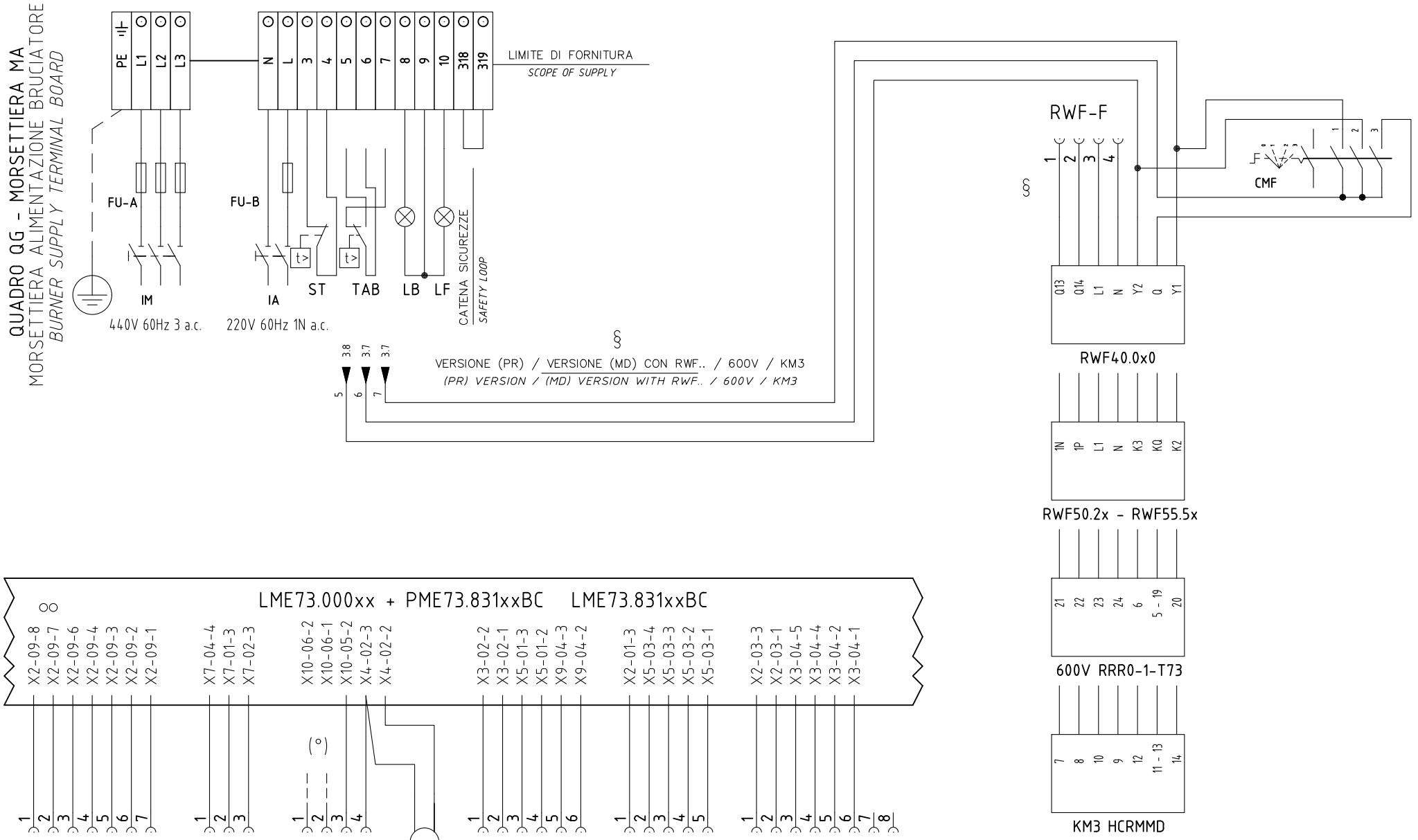

Data 30/09/2014		PREC. 8	FOGLIO 9
Revisione 01			
Dis. N. 09-0419 – A		SEGUE 10	TOTALE 13

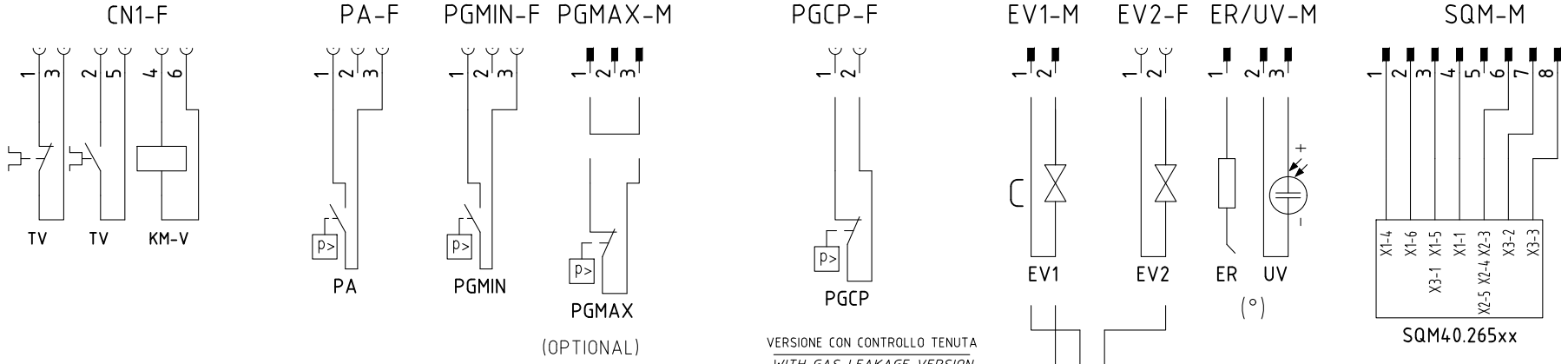

SERVOCOMANDO SERRANDA ARIA

AIR DAMPER ACTUATOR

SQM40.265Axx

I	ALTA FIAMMA *HIGH FLAME*
II	SOSTA *STAND-BY*
III	BASSA FIAMMA *LOW FLAME*
VI	ACCENSIONE *IGNITION*

ESECUZIONE [A] = SOLO SENZA CONTROLLO TENUTA

[A] PERFORMANCE = WITHOUT GAS LEAKAGE ONLY

(°)

SONDA "UV" IN ALTERNATIVA A ELETTRODO "ER"

"UV" PROBE ALTERNATIVE TO "ER"

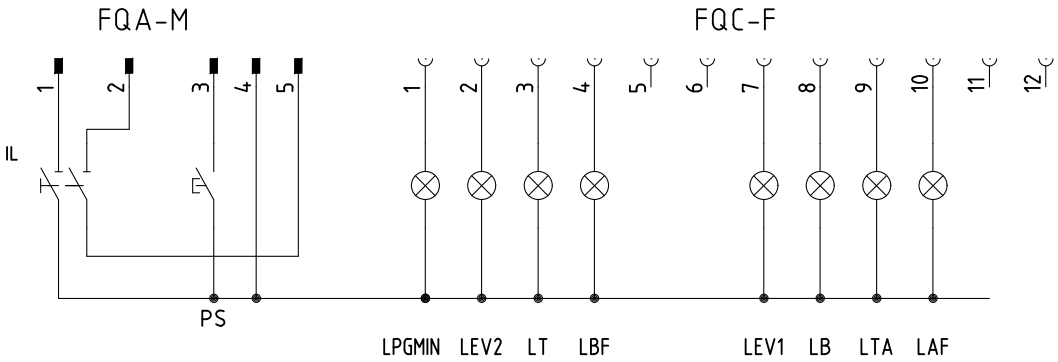

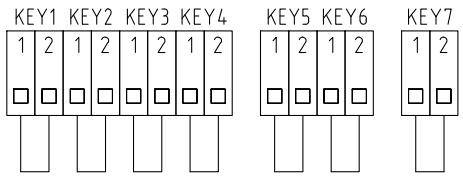

Data 30/09/2014		PREC. 9	FOGLIO 10
Revisione 01			
Dis. N. 09-0419 – A		SEGUE 11	TOTALE 13

0	1	2	3	4	5	6	7	8	9

Sigla/Item	Foglio/Sheet	Funzione	Function
600V RRR0-1-T73	6	REGOLATORE MODULANTE (ALTERNATIVO)	BURNER MODULATOR (ALTERNATIVE)
AZL2x..	5	INTERFACCIA UTENTE	USER INTERFACE
CMF	6	COMMUT. MANUALE FUNZ. 0)FERMO 1)ALTA FIAMMA 2)BASSA FIAMMA 3)AUTOMATICO	MANUAL SWITCH 0)OFF 1)HIGH FLAME 2)LOW FLAME 3)AUTOMATIC
ER	5	ELETTRODO RILEVAZIONE FIAMMA	FLAME DETECTION ELECTRODE
EV1	4	ELETTROVALVOLA GAS LATO RETE	UPSTREAM GAS SOLENOID VALVE
EV2	4	ELETTROVALVOLA GAS LATO BRUCIATORE	DOWNSTREAM GAS SOLENOID VALVE
FU1	1	FUSIBILE AUSILIARIO	AUXILIARY FUSE
FU2	6	FUSIBILE	FUSE
FU-A	1	FUSIBILI DI LINEA	LINE FUSES
FU-B	1	FUSIBILE DI LINEA	LINE FUSE
IA	1	INTERRUTTORE LINEA AUSILIARI	AUXILIARY LINE SWITCH
IL	1	INTERRUTTORE LINEA AUSILIARI	AUXILIARY LINE SWITCH
IM	1	INTERRUTTORE MOTORE VENTILATORE	FAN MOTOR SWITCH
KM3 HCRMMD	6	REGOLATORE MODULANTE (ALTERNATIVO)	BURNER MODULATOR (ALTERNATIVE)
KM-V	1	CONTATTORE MOTORE VENTILATORE	FAN MOTOR CONTACTOR
LAF	5	LAMPADA SEGNALAZIONE ALTA FIAMMA BRUCIATORE	BURNER IN HIGH FLAME INDICATOR LIGHT
LB	2	LAMPADA SEGNALAZIONE BLOCCO BRUCIATORE	INDICATOR LIGHT FOR BURNER LOCK-OUT
LBF	4	LAMPADA SEGNALAZIONE BASSA FIAMMA BRUCIATORE	BURNER IN LOW FLAME INDICATOR LIGHT
LEV1	4	LAMPADA SEGNALAZIONE APERTURA [EV1]	INDICATOR LIGHT FOR OPENING OF ELECTRO-VALVE [EV1]
LEV2	4	LAMPADA SEGNALAZIONE APERTURA [EV2]	INDICATOR LIGHT FOR OPENING OF ELECTRO-VALVE [EV2]
LME73.000xx + PME73.831xxBC	1	APPARECCHIATURA DI COMANDO	CONTROL SCHEME
LME73.831xxBC	1	APPARECCHIATURA DI COMANDO	CONTROL SCHEME
LPGMIN	3	LAMPADA SEGNALAZIONE PRESENZA GAS IN RETE	INDICATOR LIGHT FOR PRESENCE OF GAS IN THE NETWORK
LT	1	LAMPADA SEGNALAZIONE BLOCCO TERMICO MOTORE VENTILATORE	INDICATOR LIGHT FOR FAN MOTOR OVERLOAD THERMAL CUTOUT
LTA	3	LAMPADA SEGNALAZIONE TRASFORMATORE DI ACCENSIONE	IGNITION TRANSFORMER INDICATOR LIGHT
MB-DLE..Sx0	4	GRUPPO VALVOLE GAS	GAS VALVES GROUP
MB-DLE..Sx2	4	GRUPPO VALVOLE GAS	GAS VALVES GROUP
MBC..SEx0	4	GRUPPO VALVOLE GAS (ALTERNATIVO)	GAS VALVES GROUP (ALTERNATIVE)
MBC..SEx2	4	GRUPPO VALVOLE GAS (ALTERNATIVO)	GAS VALVES GROUP (ALTERNATIVE)
MV	1	MOTORE VENTILATORE	FAN MOTOR
PA	2	PRESSOSTATO ARIA	AIR PRESSURE SWITCH
PGCP	4	PRESSOSTATO GAS CONTROLLO PERDITE (OPTIONAL)	GAS LEAKAGE PRESSURE SWITCH (OPTIONAL)

Data 30/09/2014		PREC.	FOGLIO
Revisione 01		10	11
Dis. N. 09-0419 - A		SEGUE	TOTALE
		12	13

0	1	2	3	4	5	6	7	8	9

Sigla/Item	Foglio/Sheet	Funzione	Function
PGMAX	5	PRESSOSTATO GAS DI MASSIMA PRESSIONE (OPTIONAL)	MAXIMUM PRESSURE GAS SWITCH (OPTIONAL)
PGMIN	3	PRESSOSTATO GAS DI MINIMA PRESSIONE	MINIMUM GAS PRESSURE SWITCH
PS	2	PULSANTE SBLOCCO FIAMMA	FLAME UNLOCK BUTTON
PT100	8	SONDA DI TEMPERATURA	TEMPERATURE PROBE
RWF40.0x0	6	REGOLATORE MODULANTE	BURNER MODULATOR
RWF50.2x	6	REGOLATORE MODULANTE	BURNER MODULATOR
RWF55.5x	6	REGOLATORE MODULANTE (ALTERNATIVO)	BURNER MODULATOR (ALTERNATIVE)
SD-PRESS	8	SONDA DI PRESSIONE	PRESSURE PROBE
SD-TEMP.	8	SONDA DI TEMPERATURA	TEMPERATURE PROBE
SD-TEMP.	8	SONDA DI TEMPERATURA	TEMPERATURE PROBE
SD - 0÷10V	8	TRASDUTTORE USCITA IN TENSIONE	TRANSDUCER VOLTAGE OUTPUT
SD - 4÷20mA	8	TRASDUTTORE USCITA IN CORRENTE	TRANSDUCER CURRENT OUTPUT
SQM40.265Axx	5	SERVOCOMANDO SERRANDA ARIA	AIR DAMPER ACTUATOR
ST	3	SERIE TERMOSTATI/PRESSOSTATI	SERIES OF THERMOSTATS OR PRESSURE SWITCHES
TA	3	TRASFORMATORE DI ACCENSIONE	IGNITION TRANSFORMER
TAB	3	TERMOSTATO/PRESSOSTATO ALTA-BASSA FIAMMA	HIGH-LOW THERMOSTAT/PRESSURE SWITCHES
TC	8	TERMOCOPPIA	THERMOCOUPLE
TV	1	TERMICO MOTORE VENTILATORE	FAN MOTOR THERMAL
UV	5	SONDA UV RILEVAZIONE FIAMMA	UV FLAME DETECTOR

Data 30/09/2014		PREC.	FOGLIO
Revisione 01		11	12
Dis. N. 09-0419 - A		SEGUE	TOTALE
		13	13

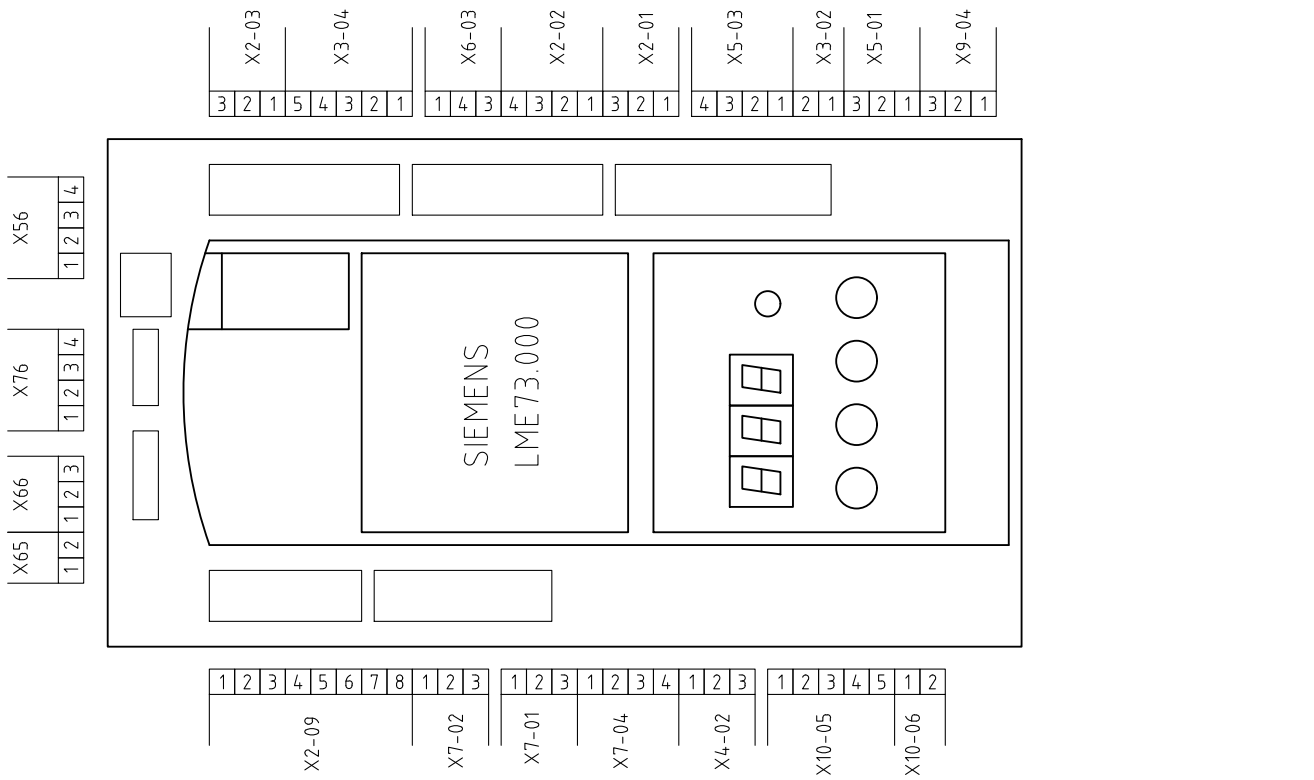

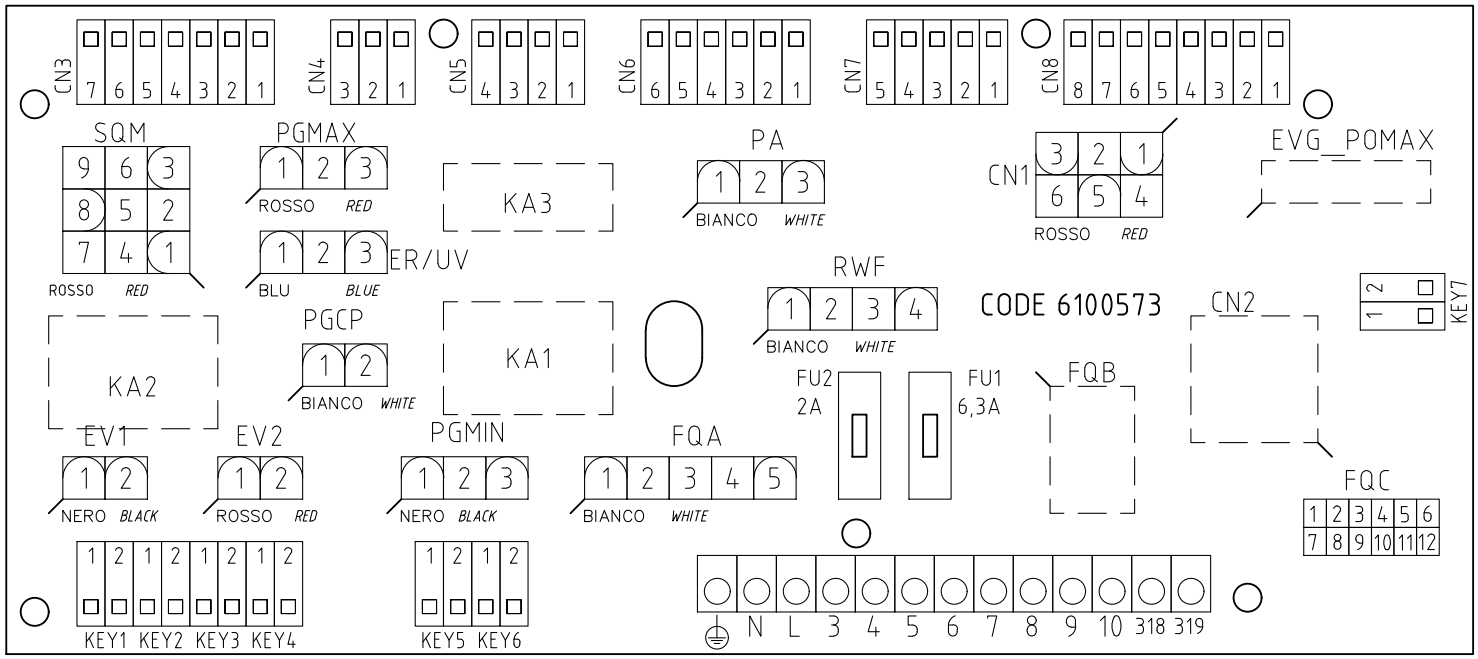

VISTA LATO COMPONENTI

COMPONENTS SIDE VIEW

Data 30/09/2014		PREC.	FOGLIO
Revisione 01		12	13
Dis. N. 09-0419 – A		SEGUE /	TOTALE 13