# HRX92R-FGR
# HRX92-FGR

# HRX512-FGR
# HRX515-FGR

## *LAMTEC BT3xx*
## *Microprocessor controlled*

## *Gas - Light oil burners*

**MANUAL OF INSTALLATION - USE - MAINTENANCE**

**CIB UNIGAS**

**BURNERS - BRUCIATORI - BRULERS - BRENNER - QUEMADORES - ГОРЕЛКИ**

M039483CB Rel 0.1 04/2020

## DANGERS, WARNINGS AND NOTES OF CAUTION

**THIS MANUAL IS SUPPLIED AS AN INTEGRAL AND ESSENTIAL PART OF THE PRODUCT AND MUST BE DELIVERED TO THE USER.**

**INFORMATION INCLUDED IN THIS SECTION ARE DEDICATED BOTH TO THE USER AND TO PERSONNEL FOLLOWING PRODUCT INSTALLATION AND MAINTENANCE.**

**THE USER WILL FIND FURTHER INFORMATION ABOUT OPERATING AND USE RESTRICTIONS, IN THE SECOND SECTION OF THIS MANUAL. WE HIGHLY RECOMMEND TO READ IT.**

**CAREFULLY KEEP THIS MANUAL FOR FUTURE REFERENCE.**

### 1) GENERAL INTRODUCTION

- The equipment must be installed in compliance with the regulations in force, following the manufacturer's instructions, by qualified personnel.
- Qualified personnel means those having technical knowledge in the field of components for civil or industrial heating systems, sanitary hot water generation and particularly service centres authorised by the manufacturer.
- Improper installation may cause injury to people and animals, or damage to property, for which the manufacturer cannot be held liable.
- Remove all packaging material and inspect the equipment for integrity.

In case of any doubt, do not use the unit - contact the supplier.

The packaging materials (wooden crate, nails, fastening devices, plastic bags, foamed polystyrene, etc), should not be left within the reach of children, as they may prove harmful.

- Before any cleaning or servicing operation, disconnect the unit from the mains by turning the master switch OFF, and/or through the cut-out devices that are provided.
- Make sure that inlet or exhaust grilles are unobstructed.
- In case of breakdown and/or defective unit operation, disconnect the unit. Make no attempt to repair the unit or take any direct action.

Contact qualified personnel only.

Units shall be repaired exclusively by a servicing centre, duly authorised by the manufacturer, with original spare parts and accessories.

Failure to comply with the above instructions is likely to impair the unit's safety.

To ensure equipment efficiency and proper operation, it is essential that maintenance operations are performed by qualified personnel at regular intervals, following the manufacturer's instructions.

- When a decision is made to discontinue the use of the equipment, those parts likely to constitute sources of danger shall be made harmless.
- In case the equipment is to be sold or transferred to another user, or in case the original user should move and leave the unit behind, make sure that these instructions accompany the equipment at all times so that they can be consulted by the new owner and/or the installer.
- This unit shall be employed exclusively for the use for which it is meant. Any other use shall be considered as improper and, therefore, dangerous.

The manufacturer shall not be held liable, by agreement or otherwise, for damages resulting from improper installation, use and failure to comply with the instructions supplied by the manufacturer.The occurrence of any of the following circustances may cause explosions, polluting unburnt gases (example: carbon monoxide CO), burns, serious harm to people, animals and things:

- Failure to comply with one of the WARNINGS in this chapter
- Incorrect handling, installation, adjustment or maintenance of the burner
- Incorrect use of the burner or incorrect use of its parts or optional supply

### 2) SPECIAL INSTRUCTIONS FOR BURNERS

- The burner should be installed in a suitable room, with ventilation openings complying with the requirements of the regulations in force, and sufficient for good combustion.
- Only burners designed according to the regulations in force should be used.
- This burner should be employed exclusively for the use for which it was designed.
- Before connecting the burner, make sure that the unit rating is the same as delivery mains (electricity, gas oil, or other fuel).
- Observe caution with hot burner components. These are, usually, near to the flame and the fuel pre-heating system, they become hot during the unit operation and will remain hot for some time after the burner has stopped.

When the decision is made to discontinue the use of the burner, the user shall have qualified personnel carry out the following operations:

a Remove the power supply by disconnecting the power cord from the mains.

b Disconnect the fuel supply by means of the hand-operated shut-off valve and remove the control handwheels from their spindles.

**Special warnings**

- Make sure that the burner has, on installation, been firmly secured to the appliance, so that the flame is generated inside the appliance fire-box.
- Before the burner is started and, thereafter, at least once a year, have qualified personnel perform the following operations:

a set the burner fuel flow rate depending on the heat input of the appliance;

b set the flow rate of the combustion-supporting air to obtain a combustion efficiency level at least equal to the lower level required by the regulations in force;

c check the unit operation for proper combustion, to avoid any harmful or polluting unburnt gases in excess of the limits permitted by the regulations in force;

d make sure that control and safety devices are operating properly;

e make sure that exhaust ducts intended to discharge the products of combustion are operating properly;

f on completion of setting and adjustment operations, make sure that all mechanical locking devices of controls have been duly tightened;

g make sure that a copy of the burner use and maintenance instructions is available in the boiler room.

- In case of a burner shut-down, reser the control box by means of the RESET pushbutton. If a second shut-down takes place, call the Technical Service, **without trying to RESET further**.
- The unit shall be operated and serviced by qualified personnel only, in compliance with the regulations in force.

### 3) GENERAL INSTRUCTIONS DEPENDING ON FUEL USED

#### 3a) ELECTRICAL CONNECTION

- For safety reasons the unit must be efficiently earthed and installed as required by current safety regulations.
- It is vital that all saftey requirements are met. In case of any doubt, ask for an accurate inspection of electrics by qualified personnel, since the manufacturer cannot be held liable for damages that may be caused by failure to correctly earth the equipment.
- Qualified personnel must inspect the system to make sure that it is adequate to take the maximum power used by the equipment shown on the equipment rating plate. In particular, make sure that the system cable cross section is adequate for the power absorbed by the unit.
- No adaptors, multiple outlet sockets and/or extension cables are permitted to connect the unit to the electric mains.
- An omnipolar switch shall be provided for connection to mains, as required by the current safety regulations.
- The use of any power-operated component implies observance of a few basic rules, for example:
  - do not touch the unit with wet or damp parts of the body and/or with bare feet;
  - do not pull electric cables;
  - do not leave the equipment exposed to weather (rain, sun, etc.) unless expressly required to do so;
  - do not allow children or inexperienced persons to use equipment;
- The unit input cable shall not be replaced by the user.
  In case of damage to the cable, switch off the unit and contact qualified personnel to replace.
  When the unit is out of use for some time the electric switch supplying all the power-driven components in the system (i.e. pumps, burner, etc.) should be switched off.

## 3b) FIRING WITH GAS, LIGHT OIL OR OTHER FUELS

### GENERAL

- The burner shall be installed by qualified personnel and in compliance with regulations and provisions in force; wrong installation can cause injuries to people and animals, or damage to property, for which the manufacturer cannot be held liable.
- Before installation, it is recommended that all the fuel supply system pipes be carefully cleaned inside, to remove foreign matter that might impair the burner operation.
- Before the burner is commissioned, qualified personnel should inspect the following:

a the fuel supply system, for proper sealing;
b the fuel flow rate, to make sure that it has been set based on the firing rate required of the burner;
c the burner firing system, to make sure that it is supplied for the designed fuel type;
d the fuel supply pressure, to make sure that it is included in the range shown on the rating plate;
e the fuel supply system, to make sure that the system dimensions are adequate to the burner firing rate, and that the system is equipped with all the safety and control devices required by the regulations in force.

- When the burner is to remain idle for some time, the fuel supply tap or taps should be closed.

### SPECIAL INSTRUCTIONS FOR USING GAS

Have qualified personnel inspect the installation to ensure that:

a the gas delivery line and train are in compliance with the regulations and provisions in force;
b all gas connections are tight;
c the boiler room ventilation openings are such that they ensure the air supply flow required by the current regulations, and in any case are sufficient for proper combustion.

- Do not use gas pipes to earth electrical equipment.
- Never leave the burner connected when not in use. Always shut the gas valve off.
- In case of prolonged absence of the user, the main gas delivery valve to the burner should be shut off.

**Precautions if you can smell gas**

a do not operate electric switches, the telephone, or any other item likely to generate sparks;
b immediately open doors and windows to create an air flow to purge the room;
c close the gas valves;
d contact qualified personnel.

- Do not obstruct the ventilation openings of the room where gas appliances are installed, to avoid dangerous conditions such as the development of toxic or explosive mixtures.

### DIRECTIVES AND STANDARDS

***Gas burners***

**European directives**

-Regulation 2016/426/UE (appliances burning gaseous fuels)
-2014/35/UE (Low Tension Directive)
-2014/30/UE (Electromagnetic compatibility Directive)
-2006/42/EC (Machinery Directive)

**Harmonized standards**

-UNI EN 676 (Automatic forced draught burners for gaseous fuels)
-EN 55014-1 (Electromagnetic compatibility- Requirements for house hold appliances, electric tools and similar apparatus)
-EN 60204-1:2006 (Safety of machinery – Electrical equipment of machines.)
-CEI EN 60335-1 (Specification for safety of household and similar electrical appliances);
-CEI EN 60335-2-102 (Household and similar electrical appliances. Safety. Particular requirements for gas, oil and solid-fuel burning appliances having electrical connections).
-UNI EN ISO 12100:2010 (Safety of machinery - General principles for design - Risk assessment and risk reduction);

***Light oil burners***

**European directives**

-2014/35/UE (Low Tension Directive)
-2014/30/UE (Electromagnetic compatibility Directive)
-2006/42/EC (Machinery Directive)

**Harmonized standards**

-UNI EN 267-2011(Automatic forced draught burners for liquid fuels)
-EN 55014-1 (Electromagnetic compatibility- Requirements for house hold appliances, electric tools and similar apparatus)
-EN 60204-1:2006 (Safety of machinery – Electrical equipment of machines.)
-CEI EN 60335-1 (Specification for safety of household and similar electrical appliances);
-CEI EN 60335-2-102 (Household and similar electrical appliances. Safety. Particular requirements for gas, oil and solid-fuel burning appliances having electrical connections).
-UNI EN ISO 12100:2010 (Safety of machinery - General principles for design - Risk assessment and risk reduction);

***Heavy oil burners***

**European Directives**

-2014/35/UE (Low Tension Directive)
-2014/30/UE (Electromagnetic compatibility Directive)
-2006/42/EC (Machinery Directive)

**Harmonized standards**

-UNI EN 267(Automatic forced draught burners for liquid fuels)
-EN 55014-1 (Electromagnetic compatibility- Requirements for house hold appliances, electric tools and similar apparatus)
-EN 60204-1:2006 (Safety of machinery – Electrical equipment of machines.)
-CEI EN 60335-1 (Specification for safety of household and similar electrical appliances);
-CEI EN 60335-2-102 (Household and similar electrical appliances. Safety. Particular requirements for gas, oil and solid-fuel burning appliances having electrical connections).
-UNI EN ISO 12100:2010 (Safety of machinery - General principles for design - Risk assessment and risk reduction);

*Gas - Light oil burners*

**European Directives**

-Regulation 2016/426/UE (appliances burning gaseous fuels)
-2014/35/UE (Low Tension Directive)
-2014/30/UE (Electromagnetic compatibility Directive)
-2006/42/EC (Machinery Directive)

**Harmonized standards**

-UNI EN 676 (Automatic forced draught burners for gaseous fuels)
-UNI EN 267(Automatic forced draught burners for liquid fuels)
-EN 55014-1 (Electromagnetic compatibility- Requirements for house hold appliances, electric tools and similar apparatus)
-EN 60204-1:2006 (Safety of machinery – Electrical equipment of machines.)
-CEI EN 60335-1 (Specification for safety of household and similar electrical appliances);
-CEI EN 60335-2-102 (Household and similar electrical appliances. Safety. Particular requirements for gas, oil and solid-fuel burning appliances having electrical connections).
-UNI EN ISO 12100:2010 (Safety of machinery - General principles for design - Risk assessment and risk reduction);

*Gas - Heavy oil burners*

**European directives:**

-Regulation 2016/426/UE (appliances burning gaseous fuels)
-2014/35/UE (Low Tension Directive)
-2014/30/UE (Electromagnetic compatibility Directive)
-2006/42/EC (Machinery Directive)

**Harmonized standards**

-UNI EN 676 (Automatic forced draught burners for gaseous fuels)
-EN 55014-1 (Electromagnetic compatibility- Requirements for house hold appliances, electric tools and similar apparatus)
-EN 60204-1:2006 (Safety of machinery – Electrical equipment of machines.)
-CEI EN 60335-1 (Specification for safety of household and similar electrical appliances);
-CEI EN 60335-2-102 (Household and similar electrical appliances. Safety. Particular requirements for gas, oil and solid-fuel burning appliances having electrical connections).
-UNI EN ISO 12100:2010 (Safety of machinery - General principles for design - Risk assessment and risk reduction);

*Industrial burners*

**European directives**

-Regulation 2016/426/UE (appliances burning gaseous fuels)
-2014/35/UE (Low Tension Directive)
-2014/30/UE (Electromagnetic compatibility Directive)
-2006/42/EC (Machinery Directive)

**Harmonized standards**

-EN 55014-1 (Electromagnetic compatibility- Requirements for house hold appliances, electric tools and similar apparatus)
-EN 746-2 (Industrial thermoprocessing equipment - Part 2: Safety requirements for combustion and fuel handling systems)
-UNI EN ISO 12100:2010 (Safety of machinery - General principles for design - Risk assessment and risk reduction);
-EN 60204-1:2006 (Safety of machinery – Electrical equipment of machines.)
-EN 60335-2 (Electrical equipment of non-electric appliances for household and similar purposes. Safety requirements)

## Burner data plate

For the following information, please refer to the data plate:

- burner type and burner model: must be reported in any communication with the supplier
- burner ID (serial number): must be reported in any communication with the supplier
- date of production (year and month)
- information about fuel type and network pressure

| | |
|---|---|
| Type | -- |
| Model | -- |
| Year | -- |
| S.Number | -- |
| Output | -- |
| Oil Flow | -- |
| Fuel | -- |
| Category | -- |
| Gas Pressure | -- |
| Viscosity | -- |
| El.Supply | -- |
| El.Consump. | -- |
| Fan Motor | -- |
| Protection | -- |
| Drwaing n° | -- |
| P.I.N. | -- |

**SYMBOLS USED**

***WARNING!*** Failure to observe the warning may result in irreparable damage to the unit or damage to the environment

***DANGER!*** Failure to observe the warning may result in serious injuries or death.

***WARNING!*** Failure to observe the warning may result in electric shock with lethal consequences

Figures, illustrations and images used in this manual may differ in appearance from the actual product.

## BURNER SAFETY

The burners - and the configurations described below - comply with the regulations in force regarding health, safety and the environment. For more in-depth information, refer to the declarations of conformity that are an integral part of this Manual.

***DANGER! Incorrect motor rotation can seriously damage property and injure people.***

### *Residual risks deriving from misuse and prohibitions*

The burner has been built in order to make its operation safe; there are, however, residual risks.

Do not touch any mechanical moving parts with your hands or any other part of your body. Injury hazard
Do not touch any parts containing fuel (i.e. tank and pipes). Scalding hazard
Do not use the burner in situations other than the ones provided for in the data plate.
Do not use fuels other than the ones stated.
Do not use the burner in potentially explosive environments.
Do not remove or by-pass any machine safety devices.
Do not remove any protection devices or open the burner or any other component while the burner is running.
Do not disconnect any part of the burner or its components while the burner is running.
Untrained staff must not modify any linkages.

After any maintenance, it is important to restore the protection devices before restarting the machine.
All safety devices must be kept in perfect working order.
Personnel authorized to maintain the machine must always be provided with suitable protections.

ATTENTION: while running, the parts of the burner near the generator (coupling flange) are subject to overheating. Where necessary, avoid any contact risks by wearing suitable PPE.

## *Burner light-oil: additional damper for exclusion FGR*

***WARNING! For burner Natural gas / Light oil LMV2x: during diesel operation it is recommended to use an additional damper to close the flow of recirculation gas FGR.***

### *FGR (ricirculate flue gas) damper*

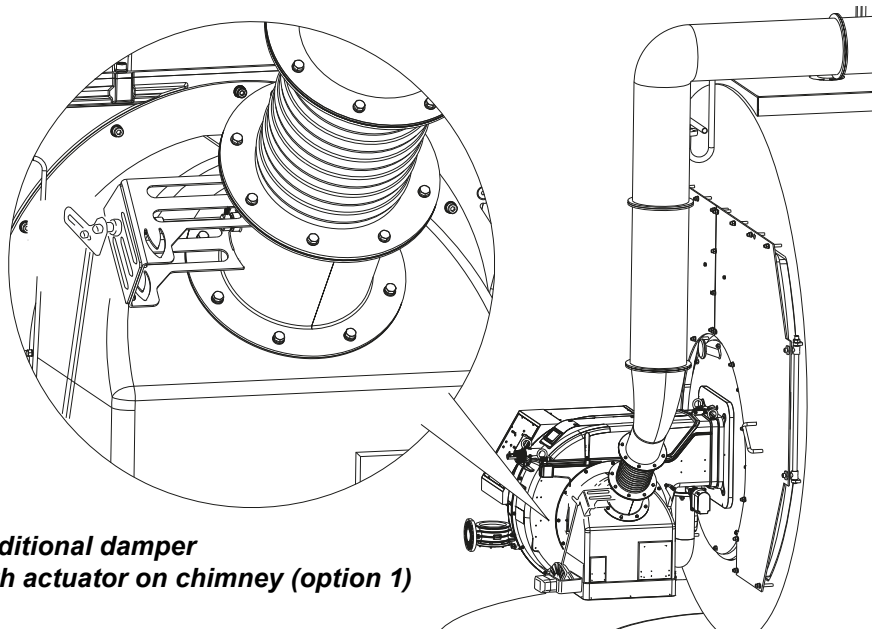

***Additional damper***
***with actuator on chimney (option 1)***

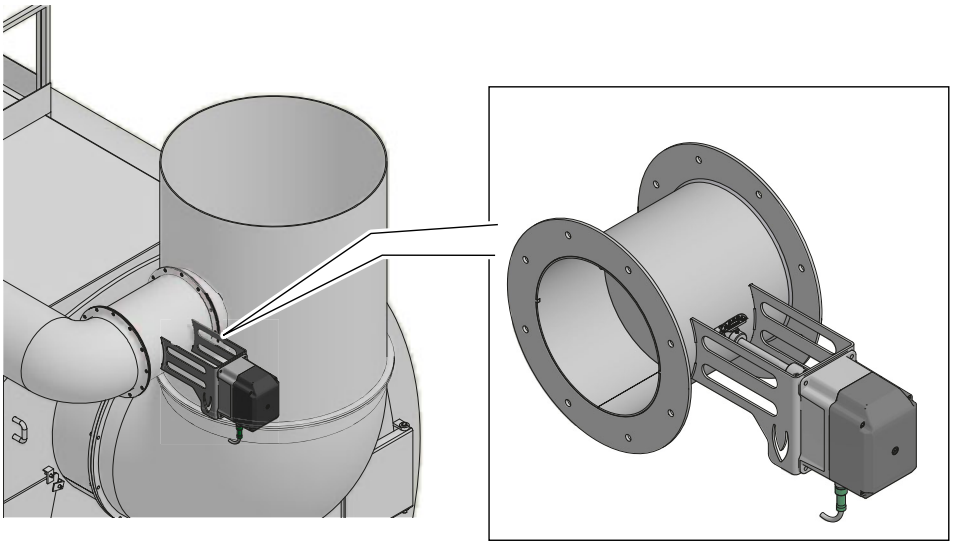

### *Option* 1: *Damper with actuator*

Connect the actuator to the electrical predisposition inside the electrical panel

### *Option* 2: *Damper manual*

Damper manual with Opening / Closing signaling microswitches to be connected to the electrical predisposition inside the burner electrical panel.

# PART I: SPECIFICATIONS

## GENERAL FEATURES

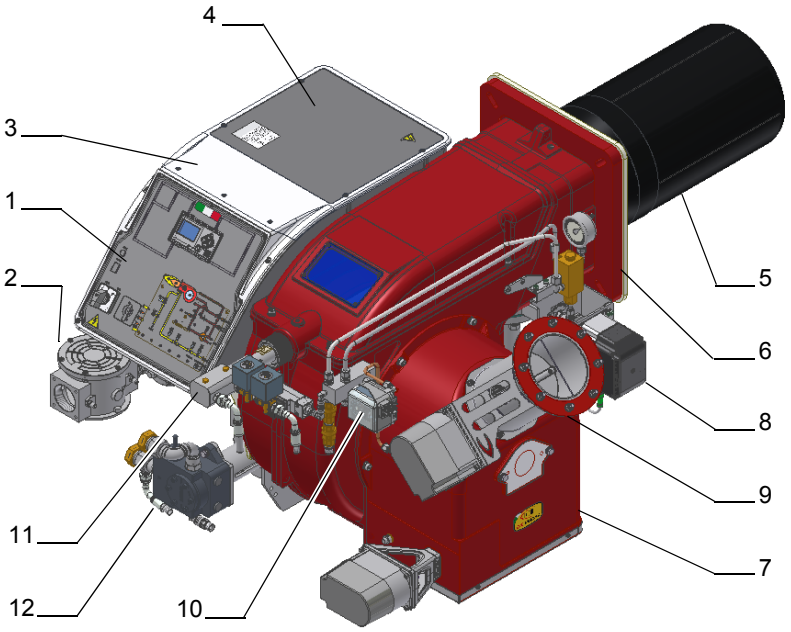


1 Control panel with startup switch
2 Gas train
3 Electrical panel
4 Cover
5 Blast tube + Combustion head
6 Flange
7 Air damper
8 Actuator
9 FGR, flue gas recirculation (FGR bur
10 Air pressure switch
11 Oil manifold
12 Pump

**Gas operation:** the gas coming from the supply line, passes through the valves group provided with filter and governor. This one forces the pressure in the utilisation limits. The actuators move proportionally the air damper and the gas butterfly valve, in order to achieve the optimisation of the gas flue values, as to get an efficient combustion.

**Light oil operation:** the fuel coming from the supply line, is pushed by the pump to the nozzle and then into the combustion chamber, where the mixture between fuel and air takes place and consequently the flame.
In the burners, the mixture bertween fuel and air, to perform clean and efficient combustion, is activated by atomisation of oil into very small particles. This process is achieved making pressurised oil passing through the nozzle.
The pump main function is to transfer oil from the tank to the nozzle in the desired quantity and pressure. To adjust this pressure, pumps are provided with a pressure regulator (except for some models for which a separate regulating valve is provided). Other pumps are provided with two pressure regulators: one for the high and one for low pressure (in double-stage systems with one nozzle).

The adjustable combustion head can improve the burner performance. The combustion head determines the energetic quality and the geometry of the flame. Fuel and comburent are routed into separated ways as far as the zone of flame generation (combustion chamber). The control panel, placed on the burner front side, shows each operating stage.

### *Country and usefulness gas categories*

| GAS CAT | COUNTRY | | | | | | | | | | | | | | | | | | | | | | | | |
|---|---|---|---|---|---|---|---|---|---|---|---|---|---|---|---|---|---|---|---|---|---|---|---|---|---|
| $I_{2H}$ | AT | ES | GR | SE | FI | IE | HU | IS | NO | CZ | DK | GB | IT | PT | CY | EE | LV | SI | MT | SK | BG | LT | RO | TR | CH |
| $I_{2E}$ | LU | PL | - | - | - | - | - | - | - | - | - | - | - | - | - | - | - | - | - | - | - | - | - | - | - |
| $I_{2E(R}$ | BE | - | - | - | - | - | - | - | - | - | - | - | - | - | - | - | - | - | - | - | - | - | - | - | - |
| (*) | NL | - | - | - | - | - | - | - | - | - | - | - | - | - | - | - | - | - | - | - | - | - | - | - | - |
| $I_{2ELL}$ | DE | - | - | - | - | - | - | - | - | - | - | - | - | - | - | - | - | - | - | - | - | - | - | - | - |
| $I_{2Er}$ | FR | - | - | - | - | - | - | - | - | - | - | - | - | - | - | - | - | - | - | - | - | - | - | - | - |

**(*) Only for $I_{2EK}$** : the appliance was configured for the appliance category K (I2K) and is suitable for the use of G and G+ distribution gases according to the specifications as included in the NTA 8837:2012 Annex D with a Wobbe index of 43.46 – 45.3 MJ/m3 (dry, 0 °C, upper value) or 41.23 – 42.98 (dry, 15 °C, upper value). This appliance can moreover be converted and/or be calibrated for the appliance category E (I2E). This therefore implies that the appliance "is suitable for G+ gas and H gas or is demonstrably suitable for G+ gas and can demonstrably be made suitable for H gas" within the meaning of the "Dutch Decree of 10 May 2016 regarding amendment of the Dutch Gas Appliances Decree and the Dutch Commodities (Administrative Fines) Act in connection with the changing composition of gas in the Netherlands as well as technical amendment of some other decrees.

## *Fuel*

***DANGER! The burner must be used only with the fuel specified in the burner data plate.***

| | |
|---|---|
| Type | -- |
| Model | -- |
| Year | -- |
| S.Number | -- |
| Output | -- |
| Oil Flow | -- |
| Fuel | -- |
| Category | -- |
| Gas Pressure | -- |
| Viscosity | -- |
| El.Supply | -- |
| El.Consump. | -- |

## *Burner model identification*

Burners are identified by burner type and model. Burner model identification is described as follows.

| Type | **HRX515-FGR** | Model | **MG.** | **MD.** | **S.** | ***.** | **A.** | **1.** | **65.** | **LF.** |
|---|---|---|---|---|---|---|---|---|---|---|
| | **(1)** | | **(2)** | **(3)** | **(4)** | **(5)** | **(6)** | **(7)** | **(8)** | **(9)** |

| | | |
|---|---|---|
| 1 | BURNER TYPE | **HRX92R-FGR, HRX92-FGR, HRX512-FGR, HRX515-FGR** |
| 2 | FUEL | M - Natural gas<br>G - Light oil |
| 3 | OPERATION (Available versions) | PR - Progressive<br>MD - Fully modulating |
| 4 | BLAST TUBE | S - Standard |
| 5 | DESTINATION COUNTRY | * - see data plate |
| 6 | BURNER VERSION | A - Standard<br>Y - Special |
| 7 | EQUIPMENT | 1 = 2 gas valves + gas proving system<br>8 = 2 gas valves + gas proving system + maximum gas pressure switch |
| 8 | GAS CONNECTION | 50 = Rp2 65 = DN65<br>80 = DN80 100 = DN100 |
| 9 | MICRO-PROCESSOR CONTROL | LF = Medium-large burners complete with electronic cam and temperature-compensated flue gas recirculation, without $O_2$ monitoring, without inverter. |

## *Technical Specifications*

| **BURNER TYPE MG..** | | **HRX92R-FGR** | **HRX92-FGR** | **HRX512-FGR** | **HRX515-FGR** |
|---|---|---|---|---|---|
| Output | min. - max. kW | 320 - 1.870 | 680 - 2.504 | 1.280 - 3.600 | 1.065 - 4.160 |
| Fuel | | Natural gas - Light oil | | | |
| Category | | (see next paragraph) | | | |
| Gas rate- Natural gas | min.- max. ($Stm^3/h$) | 34 - 198 | 72 - 265 | 135 - 381 | 113 - 440 |
| Gas pressure | mbar | (see Note 2) | | | |
| Light oil rate | min.-max. kg/h | 27 - 158 | 57 - 211 | 51 - 304 | 90 - 351 |
| Oil viscosity | cSt @ 40°C | 2 - 7,4 | | | |
| Oil density | $kg/m^3$ | 840 | | | |
| Light oil train inlet pressure | bar max | 2 | | | |
| Power supply | | 230V 3~ / 400V 3N ~ 50Hz | | | |
| Total power consumption | kW | 9,1 | 9,1 | 12,6 | 17 |
| Electric motor | kW | 7,5 | 7,5 | 11 | 15 |
| Pump motor | kW | 1,1 | 1,1 | 1,1 | 1,5 |
| Protection | | IP40 | | | |
| Operation | | Progressive - Fully modulating | | | |
| Gas train 50 | Valves size / Gas connection | 50 / Rp 2 | | | |
| Gas train 65 | Valves size / Gas connection | 65 / DN65 | | | |
| Gas train 80 | Valves size / Gas connection | 80 / DN80 | | | |
| Gas train 100 | Valves size / Gas connection | 100 / DN100 | | | |
| Operating temperature | °C | -10 ÷ +50 | | | |
| Storage Temperature | °C | -20 ÷ +60 | | | |
| Working service | | Continuous | | | |

| | |
|---|---|
| **Note1:** | **All gas flow rates are referred to $Stm^3/h$ (1.013 mbar absolute pressure, 15° C temperature) and are valid for G20 gas (net calorific value $H_i$ = 34.02 MJ / $Stm^3$);** |
| **Note2:** | **Maximum gas pressure = 500mbar (with Siemens VGD or Dungs MultiBloc MBE)**<br>**Minimum gas pressure = see gas curves.** |
| **Note3:** | **Burners are suitable only for indoor operation with a maximum relative humidity of 80 %** |

## *Overall dimensions (mm) RX92R-FGR - RX92-FGR*

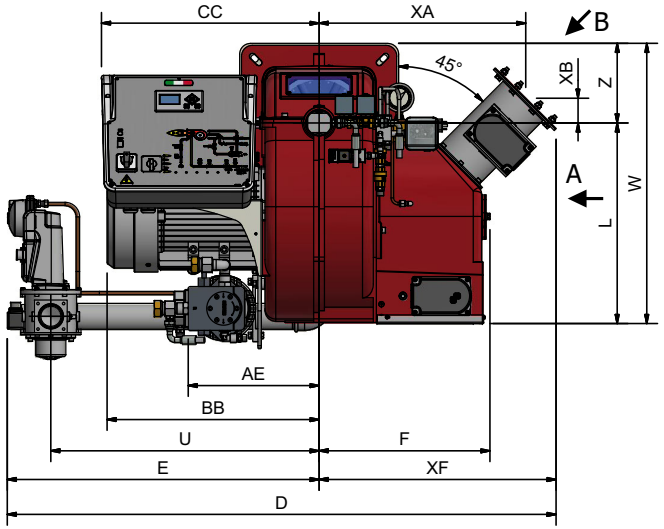


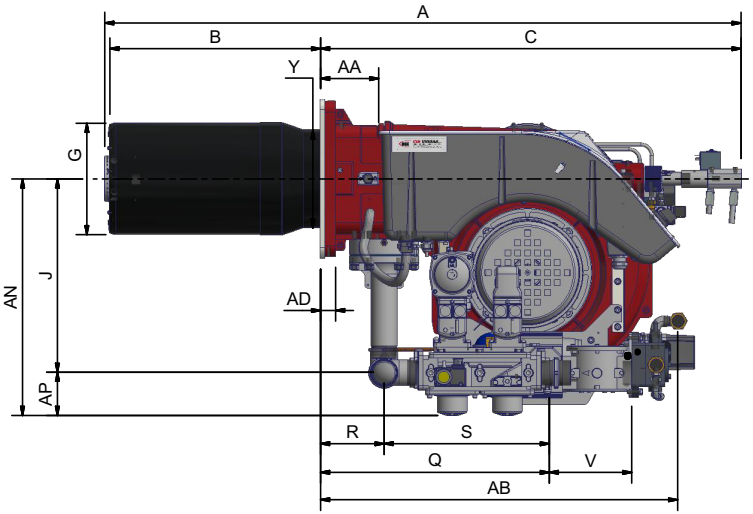


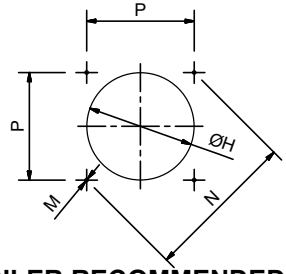


**BOILER RECOMMENDED DRILLING TEMPLATE**

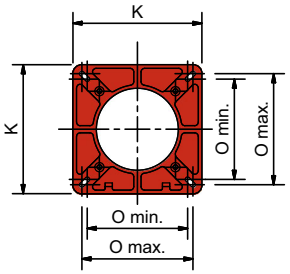


**BURNER FLANGE**

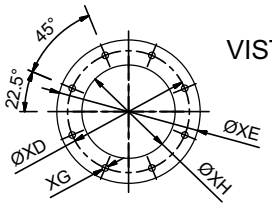


VISTA B

**FGR FLANGE**

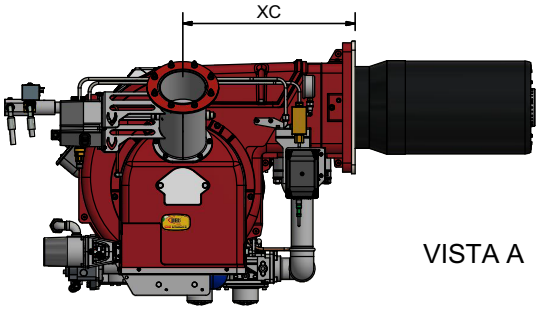


VISTA A

**B*: SPECIAL BLAST TUBE LENGTHS MUST BE AGREED WITH CIB UNIGAS**

BS = standard blast tube BL = long blast tube DN = gas valves size

NOTE: the overall dimensions are referred to burners provided with Siemens VGD valves.

| TIPO | DN | A(AS) | A(AL) | AA | AD | AE | AN | AP | B(BS) | B(BL) | BB | C | CC | D | E | F | G | H | I | J | K | L | M | N | Omin | Omax | P | Q | R | S | U | V | W | Y | Z | XA | XB | XC | XD | XE | XF | XG | XH |
|---|---|---|---|---|---|---|---|---|---|---|---|---|---|---|---|---|---|---|---|---|---|---|---|---|---|---|---|---|---|---|---|---|---|---|---|---|---|---|---|---|---|---|---|
| HRX92R -FGR | 50 | 1380 | 1480 | 135 | 35 | 305 | 550 | 100 | 390 | 490 | 493 | 978 | 506 | 1274 | 725 | 439 | 261 | 291 | 228 | 450 | 360 | 464 | M12 | 424 | 280 | 310 | 300 | 532 | 148 | 384 | 624 | 190 | 649 | 228 | 185 | 478 | 55 | 481 | 170 | 200 | 549 | 9 | 131 |
| | 65 | 1380 | 1480 | 135 | 35 | 305 | 564 | 117 | 390 | 490 | 493 | 978 | 506 | 1520 | 971 | 439 | 261 | 291 | 228 | 447 | 360 | 464 | M12 | 424 | 280 | 310 | 300 | 632 | 148 | 484 | 846 | 292 | 649 | 228 | 185 | 478 | 55 | 481 | 170 | 200 | 549 | 9 | 131 |
| | 80 | 1380 | 1480 | 135 | 35 | 305 | 579 | 132 | 390 | 490 | 493 | 978 | 506 | 1551 | 1002 | 439 | 261 | 291 | 228 | 447 | 360 | 464 | M12 | 424 | 280 | 310 | 300 | 683 | 148 | 535 | 875 | 313 | 649 | 228 | 185 | 478 | 55 | 481 | 170 | 200 | 549 | 9 | 131 |
| | 100 | 1380 | 1480 | 135 | 35 | 305 | 592 | 145 | 390 | 490 | 493 | 978 | 506 | 1634 | 1085 | 439 | 261 | 291 | 228 | 447 | 360 | 464 | M12 | 424 | 280 | 310 | 300 | 790 | 148 | 642 | 942 | 353 | 649 | 228 | 185 | 478 | 55 | 481 | 170 | 200 | 549 | 9 | 131 |

| TIPO | DN | A(AS) | A(AL) | AA | AD | AE | AN | AP | B(BS) | B(BL) | BB | C | CC | D | E | F | G | H | I | J | K | L | M | N | Omin | Omax | P | Q | R | S | U | V | W | Y | Z | XA | XB | XC | XD | XE | XF | XG | XH |
|---|---|---|---|---|---|---|---|---|---|---|---|---|---|---|---|---|---|---|---|---|---|---|---|---|---|---|---|---|---|---|---|---|---|---|---|---|---|---|---|---|---|---|---|
| HRX92 -FGR | 50 | 1410 | 1520 | 135 | 35 | 305 | 550 | 100 | 420 | 530 | 493 | 978 | 506 | 1274 | 725 | 439 | 284 | 314 | 228 | 450 | 360 | 464 | M12 | 424 | 280 | 310 | 300 | 532 | 148 | 384 | 624 | 190 | 649 | 228 | 185 | 478 | 55 | 481 | 170 | 200 | 549 | 9 | 131 |
| | 65 | 1410 | 1520 | 135 | 35 | 305 | 564 | 117 | 420 | 530 | 493 | 978 | 506 | 1520 | 971 | 439 | 284 | 314 | 228 | 447 | 360 | 464 | M12 | 424 | 280 | 310 | 300 | 632 | 148 | 484 | 846 | 292 | 649 | 228 | 185 | 478 | 55 | 481 | 170 | 200 | 549 | 9 | 131 |
| | 80 | 1410 | 1520 | 135 | 35 | 305 | 579 | 132 | 420 | 530 | 493 | 978 | 506 | 1551 | 1002 | 439 | 284 | 314 | 228 | 447 | 360 | 464 | M12 | 424 | 280 | 310 | 300 | 683 | 148 | 535 | 875 | 313 | 649 | 228 | 185 | 478 | 55 | 481 | 170 | 200 | 549 | 9 | 131 |
| | 100 | 1410 | 1520 | 135 | 35 | 305 | 592 | 145 | 420 | 530 | 493 | 978 | 506 | 1634 | 1085 | 439 | 284 | 314 | 228 | 447 | 360 | 464 | M12 | 424 | 280 | 310 | 300 | 790 | 148 | 642 | 942 | 353 | 649 | 228 | 185 | 478 | 55 | 481 | 170 | 200 | 549 | 9 | 131 |

## *Overall dimensions (mm) RX512-FGR (1.65.LF)*

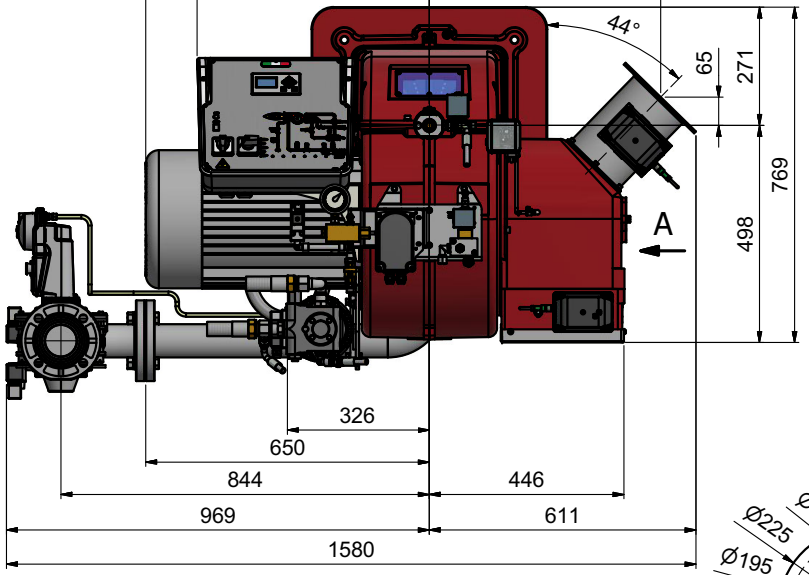


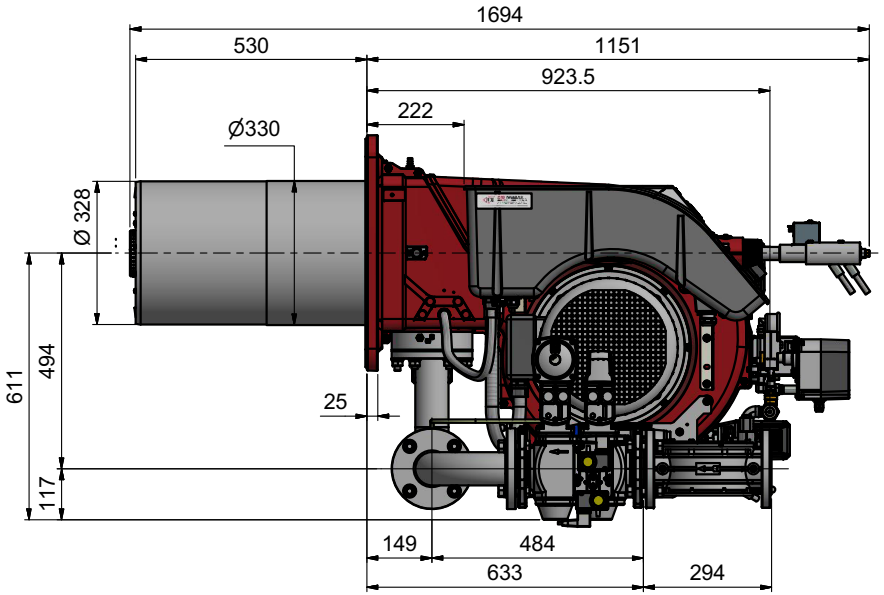


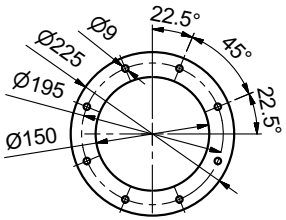


**FGR FLANGE**

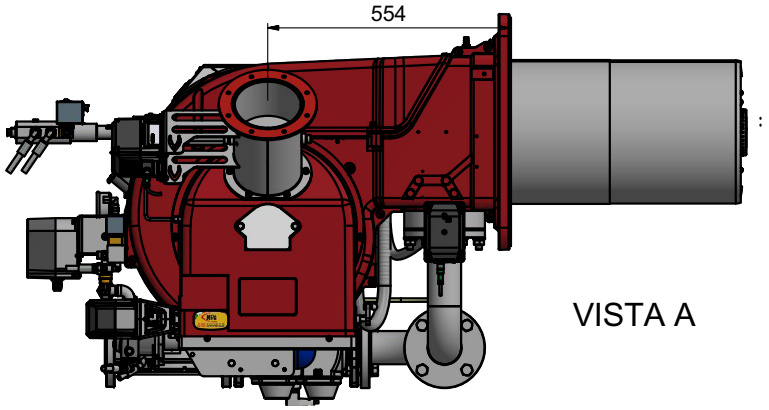


VISTA A

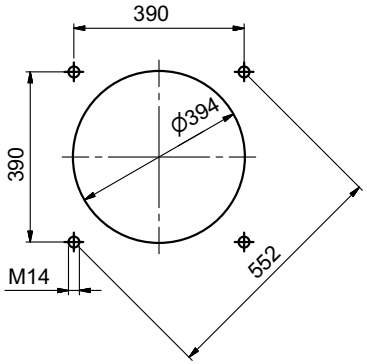


**BOILER RECOMMENDED DRILLING TEMPLATE**

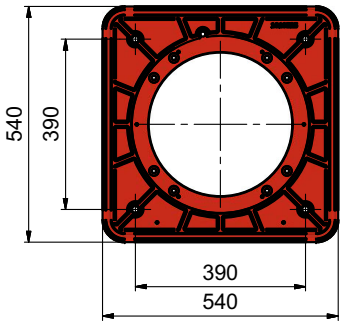


**BURNER FLANGE**

**B*: SPECIAL BLAST TUBE LENGTHS MUST BE AGREED WITH CIB UNIGAS**

## *Overall dimensions (mm) RX515-FGR (1.65.LF)*

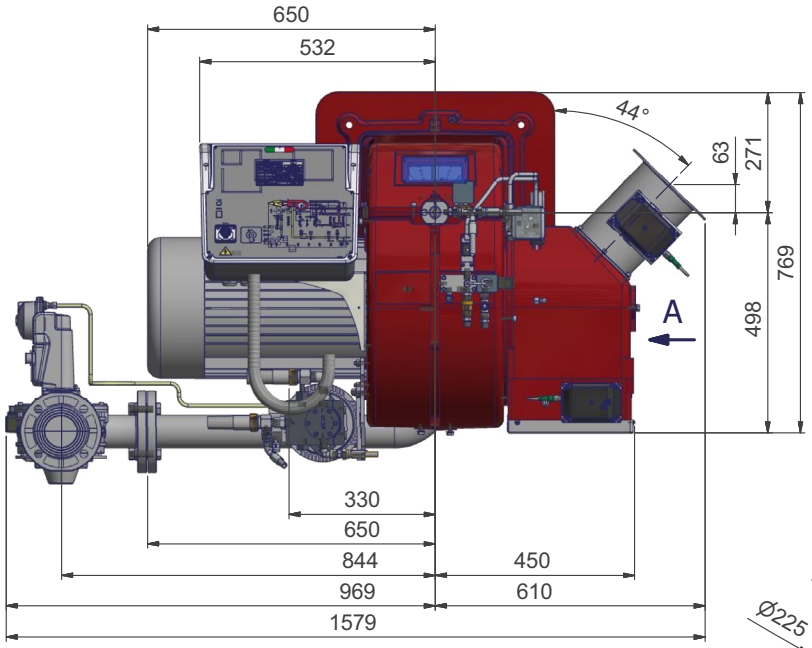


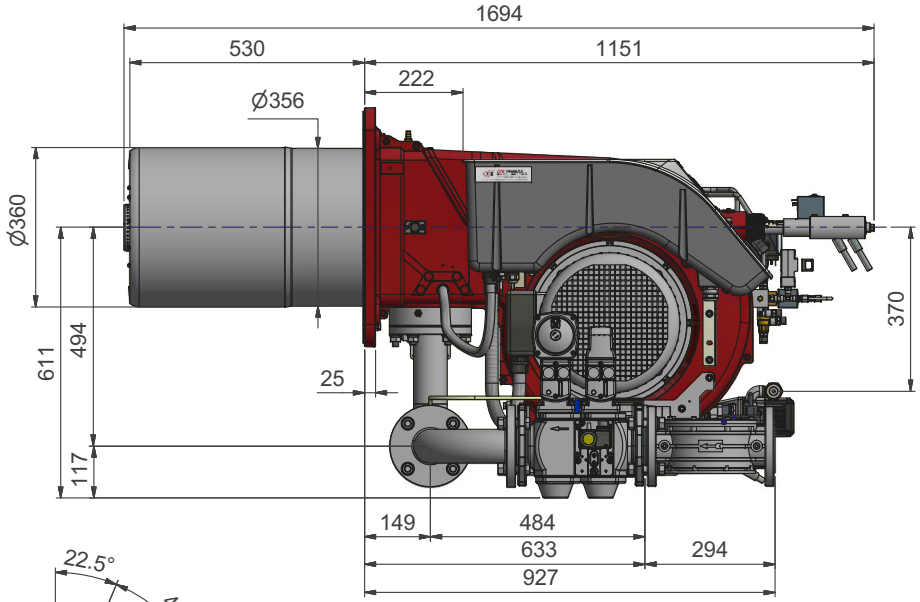


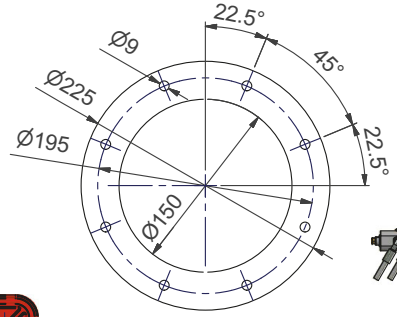


**FGR FLANGE**

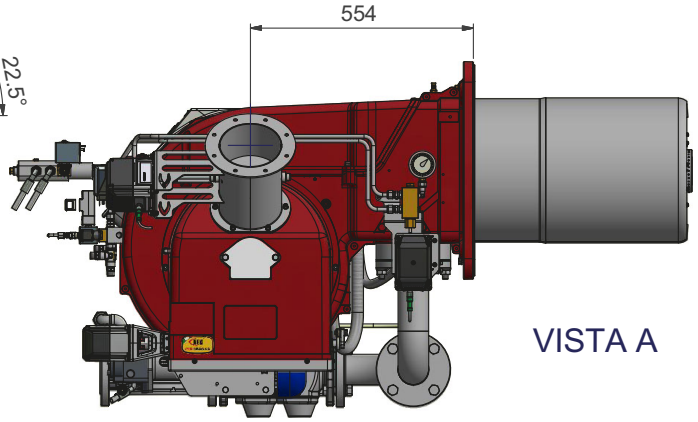


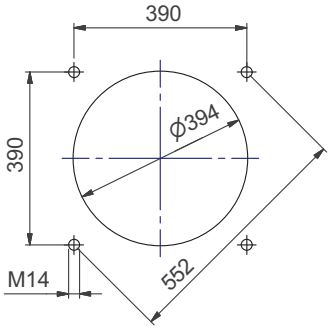


**BOILER RECOMMENDED DRILLING TEMPLATE**

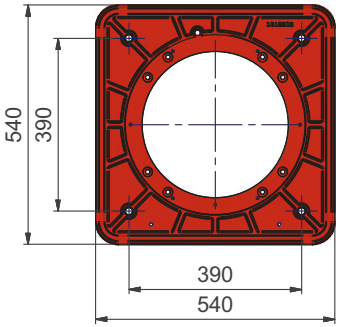


**BURNER FLANGE**

**B*: SPECIAL BLAST TUBE LENGTHS MUST BE AGREED WITH CIB UNIGAS**

## 3I2MG-21 v0 Hydraulic diagram BT3xx

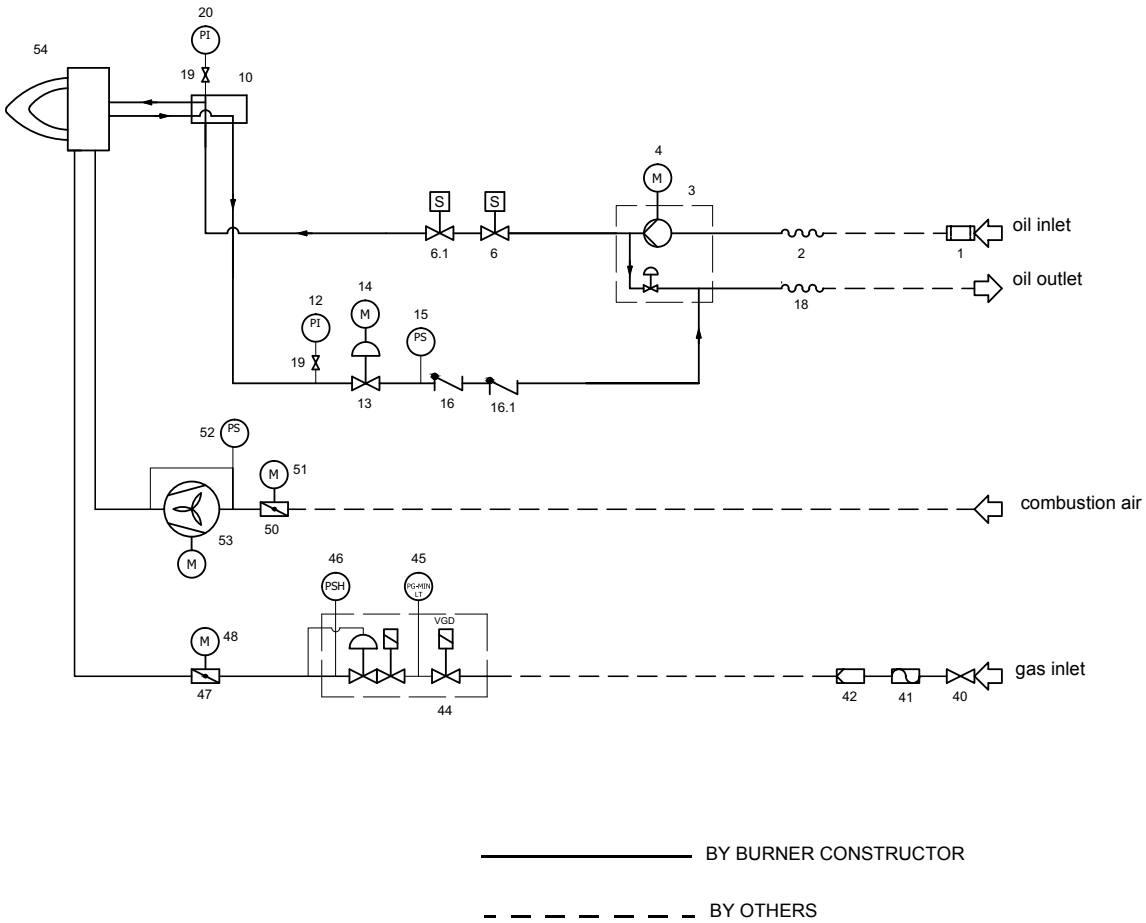


| POS | LEGEND |
|---|---|
| | **OIL TRAIN** |
| 1 | Filter |
| 2 | Flexible hose |
| 3 | Pump and pressure governor |
| 4 | Electrical motor |
| 6 | Solenoid valve |
| 6.1 | Solenoid valve |
| 10 | Oil distributor |
| 12 | Pressure gauge |
| 13 | Pressure governor |
| 15 | Pressure switch |
| 16 | One-way valve |
| 16.1 | One-way valve |
| 18 | Flexible hose |
| 19 | Manual valve |
| 20 | Pressure gauge |
| | **MAIN GAS TRAIN** |
| 23 | Pressure switch - PGMIN |
| 24 | Safety valve with built in gas governor |
| 25 | Proving system pressure switch - PGCP |
| 26 | Pressure switch - PGMAX |
| 40 | Manual valve |
| 41 | Bellows unit |
| 42 | Filter |
| 44 | Safety valve with built in gas governor |
| 45 | Proving system pressure switch - PGMIN - LT |
| 46 | Pressure switch - PGMAX |
| 47 | Butterfly valve |
| 51 | Actuator |
| | **COMBUSTION AIR TRAIN** |
| 50 | Air damper |
| 51 | Actuator |
| 52 | Pressure switch - PA |
| 53 | Draught fan with electromotor |
| 54 | Burner |

**Note**: The following POS are optional: 19, 20, 40, 41, 46

## How to read the burner "Performance curve"

To check if the burner is suitable for the boiler to which it must be installed, the following parameters are needed:

- furnace input, in kW or kcal/h (kW = kcal/h/860);
- backpressure (data are available on the boiler ID plate or in the user's manual).

Example:

Furnace input: 600kW

Backpressure: 4 mbar

In the "Performance curve" diagram, draw a vertical line matching the furnace input value and an horizontal line matching the backpressure value. The burner is suitable if the intersection point A is inside the performance curve.

Data are referred to standard conditions: atmospheric pressure at 1013 mbar, ambient temperature at 15° C.

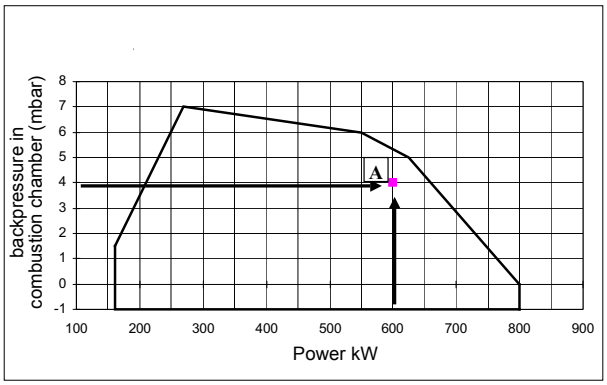


## Performance Curves

**HRX92R-FGR**

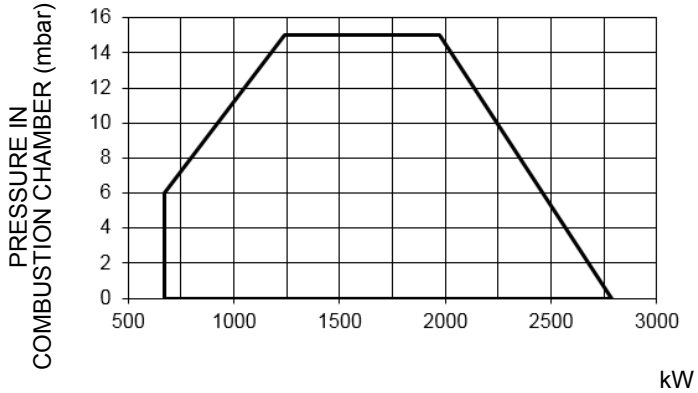


**HRX512R-FGR**

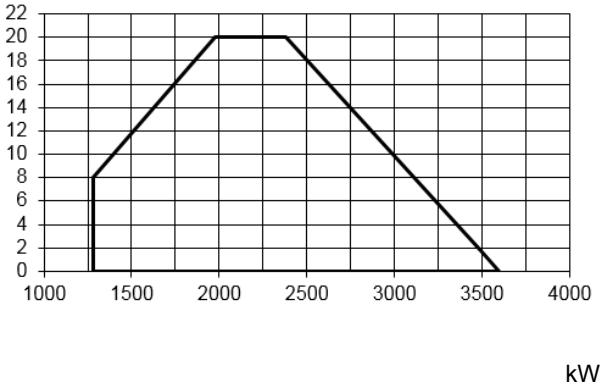


**HRX92-FGR**

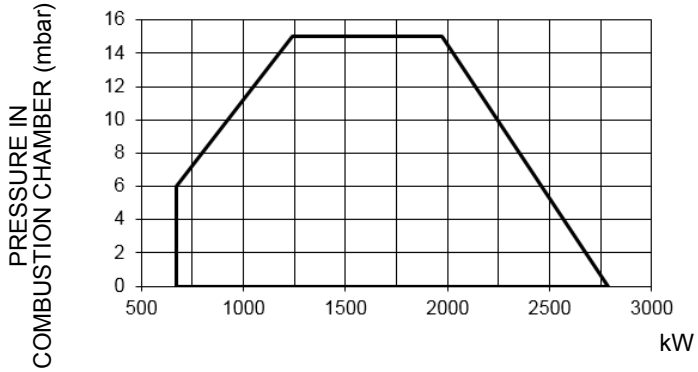


**HRX515-FGR**

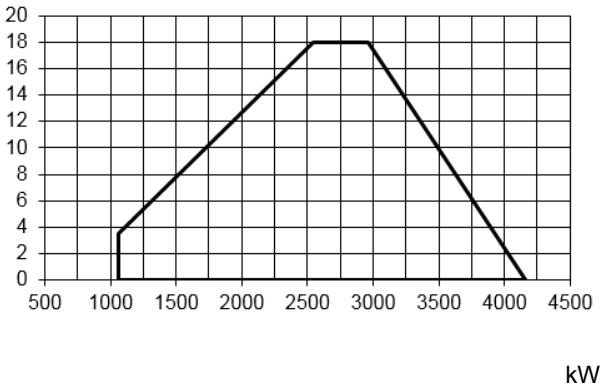


To get the input in kcal/h, multiply value in kW by 860.

Data are referred to standard conditions: atmospheric pressure at 1013mbar, ambient temperature at 15° C

**NOTE:** The performance curve is a diagram that represents the burner performance in the type approval phase or in the laboratory tests, but does not represent the regulation range of the machine. On this diagram the maximum output point is usually reached by adjsuting the combustion head to its "MAX" position (see paragraph "Adjusting the combustion head"); the minimum output point is reached setting the combustion head to its "MIN" position. During the first ignition, the combustion head is set in order to find a compromise between the burner output and the generator specifications, that is why the minimum output may be different from the Performance curve minimum

## Checking the proper gas train size

To check the proper gas train size, it is necessary to the available gas pressure value upstream the burner's gas valve. Then subtract the backpressure. The result is called **pgas.** Draw a vertical line matching the furnace input value (600kW, in the example), quoted on the x-axis, as far as intercepitng the network pressure curve, according to the installed gas train (DN65, in the example). From the interception point, draw an horizontal line as far as matching, on the y-axis, the value of pressure necessary to get the requested furnace input. This value must be lower or equal to the **pgas** value, calculated before.

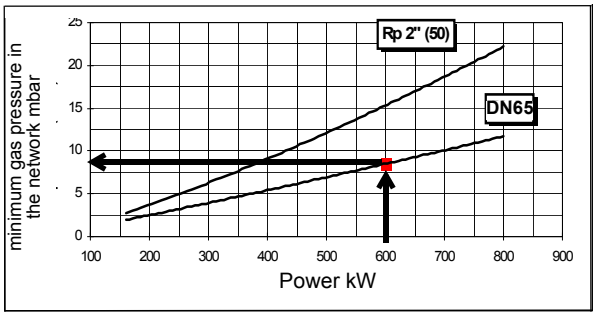


## Pressure in the Network / gas flow rate curves (natural gas)

**HRX92R MG..**

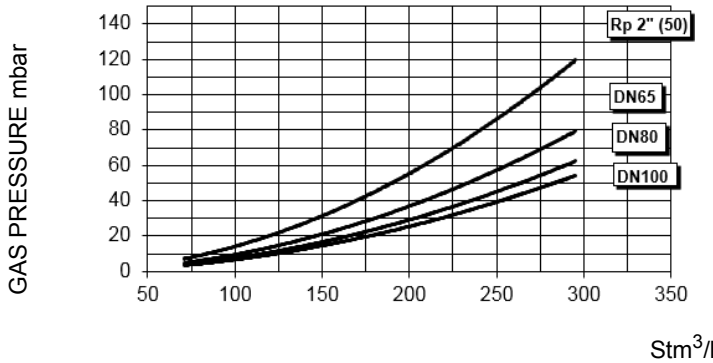


**HRX512R MG..**

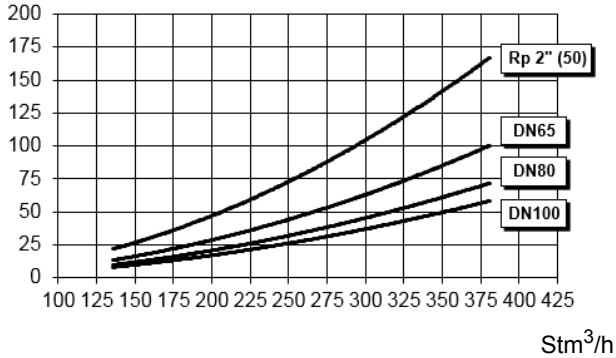


**HRX92 MG..**

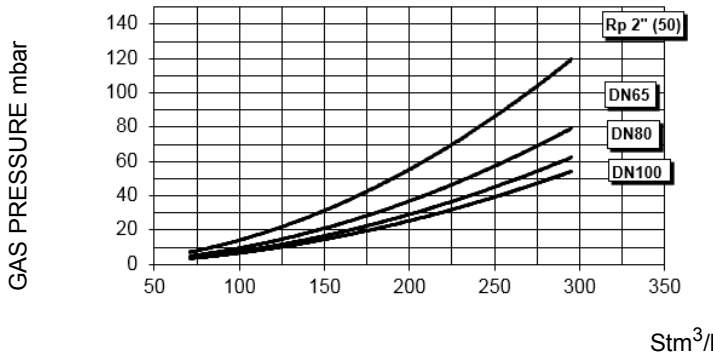


**HRX515 MG..**

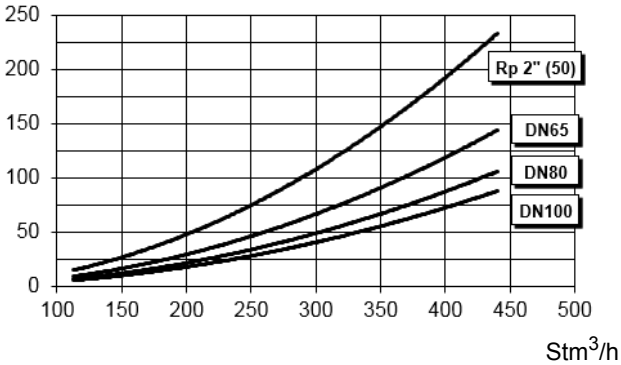


***ATTENTION: the gas rate value is quoted on the x-axis, the related network pressure is quoted on the y-axis (pressure value in the combustion chamber is not included). To know the minimum pressure at the gas train inlet, necessary to get the requested gas rate, add the pressure value in the combustion chamber to the value read on the y-axis.***

The values in the diagrams refer to **natural gas** with a calorific value of 8125 kcal/Stm$^3$ (15°C, 1013 mbar) and a density of 0.714 kg/Stm$^3$ .

The values in the diagrams refer to **GPL** with a calorific value of 22300 kcal/Stm$^3$ (15°C, 1013 mbar) and a density of 2.14 kg/Stm$^3$. When the calorific value and the density change, the pressure values should be adjusted accordingly.

$$\Delta p2 = \Delta p1 \quad * \left(\frac{Q2}{Q1}\right)^2 * \left(\frac{\rho 2}{\rho 1}\right)$$

Where:

| | |
|---|---|
| $p1$ | Natural gas pressure shown in diagram |
| $p2$ | Real gas pressure |
| $Q1$ | Natural gas flow rate shown in diagram |
| $Q2$ | Real gas flow rate |
| $\rho 1$ | Natural gas density shown in diagram |
| $\rho 2$ | Real gas density |

## Combustion head gas pressure curves

Combustion head gas pressure depends on gas flow and combustion chamber backpressure. When backpressure is subtracted, i depends only on gas flow, provided combustion is properly adjusted, flue gases residual O2 percentage complies with “Recommendec combustion values” table and CO in the standard limits). During this stage, the combustion head, the gas butterfly valve and the actuator are at the maximum opening. Refer to , showing the correct way to measure the gas pressure, considering the values o pressure in combustion chamber, surveyed by means of the pressure gauge or taken from the boiler’s Technical specifications.

.

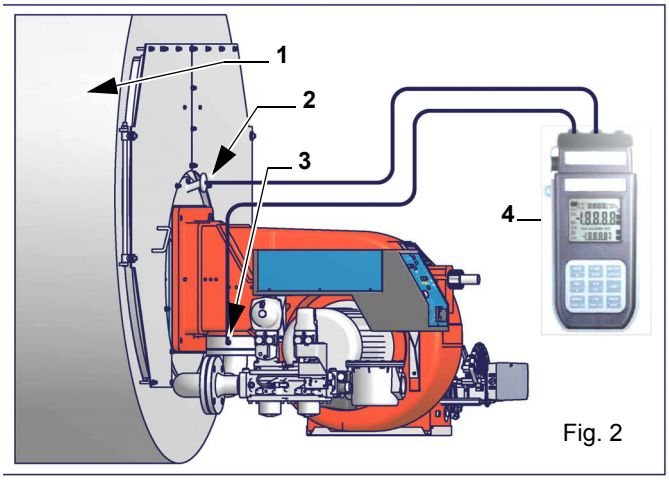


Fig. 2

Note: the figure is indicative only.
Key
1 Generator
2 Pressure outlet on the combustion chamber
3 Gas pressure outlet on the butterfly valve
4 Differential pressure gauge

***ATTENTION: THE BURNED GAS RATE MUST BE READ AT THE GAS FLOW METER. WHEN IT IS NOT POSSIBLE, THE USER CAN REFERS TO THE PRESSURE-RATE CURVES AS GENERAL INFORMATION ONLY.***

## Measuring gas pressure in the combustion head

In order to measure the pressure in the combustion head, insert the pressure gauge probes: one into the combustion chamber’s pressure outlet to get the pressure in the combustion chamber and the other one into the butterfly valve’s pressure outlet of the burner. On the basis of the measured differential pressure, it is possible to get the maximum flow rate: in the pressure - rate curves (showed on the next paragraph), it is easy to find out the burner’s output in $Stm^3/h$ (quoted on the x axis) from the pressure measured in the combustion head (quoted on the y axis). The data obtained must be considered when adjusting the gas flow rate.

## Pressure - rate in combustion head curves (natural gas)

***Curves are referred to pressure = 0 mbar in the combustion chamber!***

**HRX92R-FGR MG..**

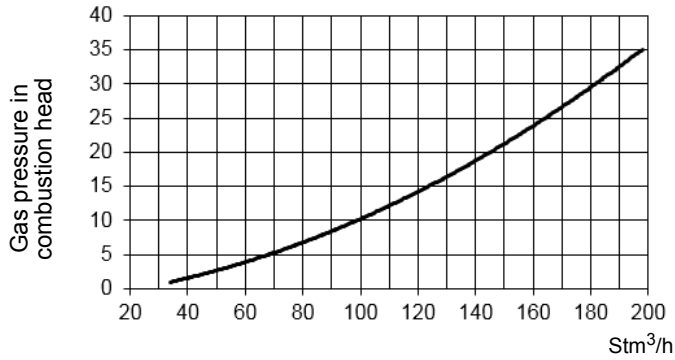


**HRX512R-FGR MG..**

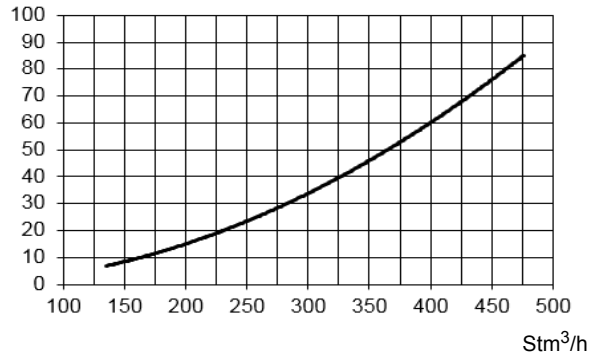


**HRX92-FGR MG..**

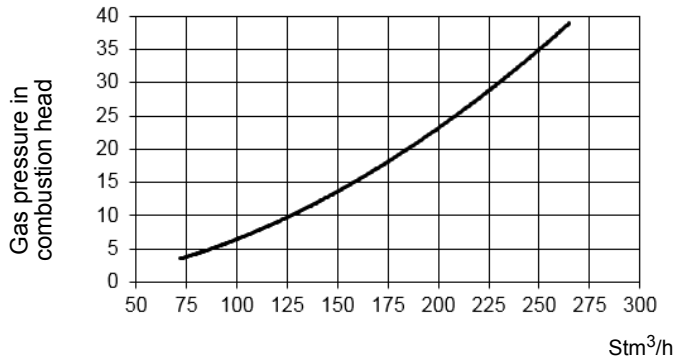


**HRX515-FGR MG..**

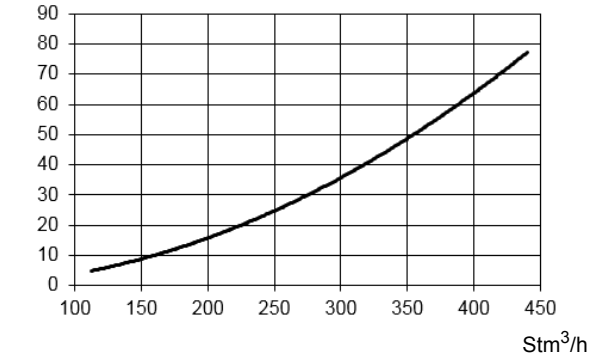

The values in the diagrams refer to **natural gas** with a calorific value of 8125 kcal/Stm$^3$ (15°C, 1013 mbar) and a density of 0.714 kg/Stm$^3$ .

The values in the diagrams refer to **GPL** with a calorific value of 22300 kcal/Stm$^3$ (15°C, 1013 mbar) and a density of 2.14 kg/Stm$^3$. When the calorific value and the density change, the pressure values should be adjusted accordingly.

$$\Delta p2 = \Delta p1 \quad * \left(\frac{Q2}{Q1}\right)^2 * \left(\frac{\rho 2}{\rho 1}\right)$$

Where:

| | |
|---|---|
| $p1$ | Natural gas pressure shown in diagram |
| $p2$ | Real gas pressure |
| $Q1$ | Natural gas flow rate shown in diagram |
| $Q2$ | Real gas flow rate |
| $\rho 1$ | Natural gas density shown in diagram |
| $\rho 2$ | Real gas density |

# PART II: INSTALLATION

## *MOUNTING AND CONNECTING THE BURNER*

### *Transport and storage*

***ATTENTION! The equipment must be installed in compliance with the regulations in force, following the manufacturer's instructions, by qualified personnel. All handling operations must be carried out with appropriate resources and qualified personnel***

***ATTENTION: Use intact and correctly dimensioned hoisting equipment, conforms to the local regulations and health and safety regulations. Do not stand under lifted loads.***

If the product must be stored, avoid humid and corrosive places. Observe the temperatures stated in the burner data table at the beginning of this manual. The packages containing the burners must be locked inside the means of transport in such a way as to guarantee the absence of dangerous movements and avoid any possible damage.

In case of storage, the burners must be stored inside their packaging, in storerooms protected from the weather. Avoid humid or corrosive places and respect the temperatures indicated in the burner data table at the beginning of this manual.

### *Packing*

The burners are despatched in wooden crates whose dimensions are:

- **9xA series: 1672mm x 1072mm x 1016mm (L x P x H)**

Packing cases of this type are affected by humidity and are not suitable for stacking.

The following are placed in each packing case:

- burner with detached gas train;
- gasket or ceramic fibre plait (according to burner type) to be inserted between the burner and the boiler;
- envelope containing this manual and other documents.
- oil flexible hoses;

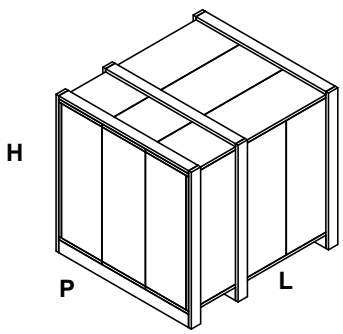


To get rid of the burner's packing, follow the procedures laid down by current laws on disposal of materials.

### *Handling the burner*

***WARNING! The handling operations must be carried out by specialised and trained personnel. If these operations are not carried out correctly, the residual risk for the burner to overturn and fall down still persists. To move the burner, use means suitable to support its weight (see paragraph "Technical specifications").***
***The unpacked burner must be lifted and moved only by means of a fork lift truck.***

The burner is mounted on a stirrup provided for handling the burner by means of a fork lift truck: the forks must be inserted into the A anb B ways. Remove the stirrup only once the burner is installed to the boiler.

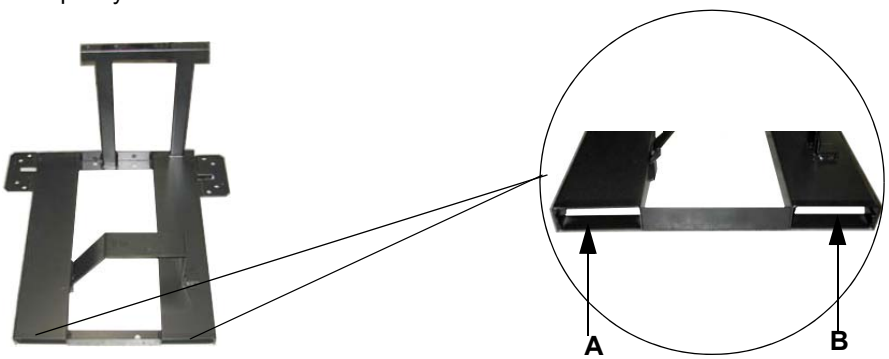


## *Fitting the burner to the boiler*

To install the burner into the boiler, proceed as follows:

1 make a hole on the closing door of the combustion chamber as described on paragraph “Overall dimensions”)
2 place the burner to the boiler: lift it up and handle it according to the procedure described on paragraph “Handling the burner”;
3 place the 4 stud bolts (5) on boiler’s door, according to the burner drilling template described on paragraph “Overall dimensions”;
4 fasten the 4 stud bolts;
5 place the gasket on the burner flange;
6 install the burner into the boiler;
7 fix the burner to the stud bolts, by means of the fixing nuts, according to the next picture.
8 After fitting the burner to the boiler, ensure that the gap between the blast tube and the refractory lining is sealed with appropriate insulating material (ceramic fibre cord or refractory cement).

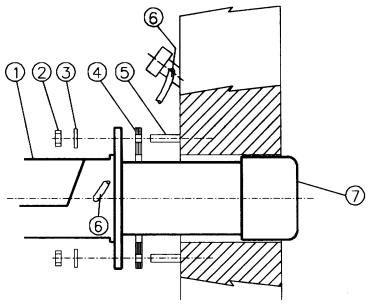


**Keys**

1 Burner
2 Fixing nut
3 Washer
4 Sealing gasket
5 Stud bolt
7 Blast tube

## *Matching the burner to the boiler (low NOx burners)*

The burners described in this manual have been tested with combustion chambers that comply with EN676 regulation and whose dimensions are described in the diagram . In case the burner must be coupled with boilers with a combustion chamber smaller in diameter or shorter than those described in the diagram, please contact the supplier, to verify that a correct matching is possible, with respect of the application involved. To correctly match the burner to the boiler verify the type of the blast tube . Verify the necessary input and the pressure in combustion chamber are included in the burner performance curve; otherwise the choice of the burner must be revised consulting the burner manufacturer. To choose the blast tube lenght consider the following rule, even if it differs from the instructions of the boiler manufacturer: Cast-iron boilers, three pass flue boilers (with the first pass in the rear part): the blast tube must protrude about 150÷200 mm into the combustion chamber (Fig. 4).The length of the blast tubes does not always allow this requirement to be met, and thus it may be necessary to use a suitably-sized spacer to move the burner backwards (Fig. 5).

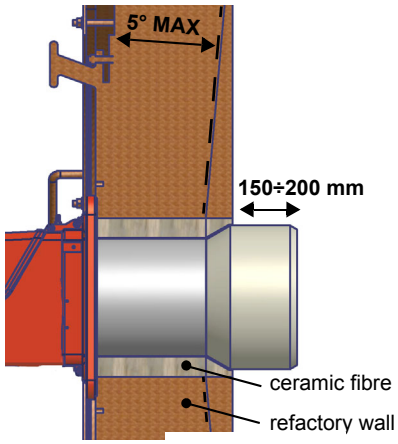


Fig. 4

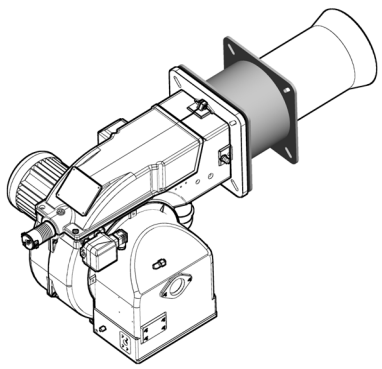

Fig. 5

***WARNING! Carefully seal the free space between blast tube and the refractory lining with ceramic fibre rope or other suitable means.***

## *Sizing of the FGR pipe (FGR burners only)*

***ATTENTION! Performance curve is obtained in a plant designed according to the following guidelines, size the FGR pipe as per the example below.***

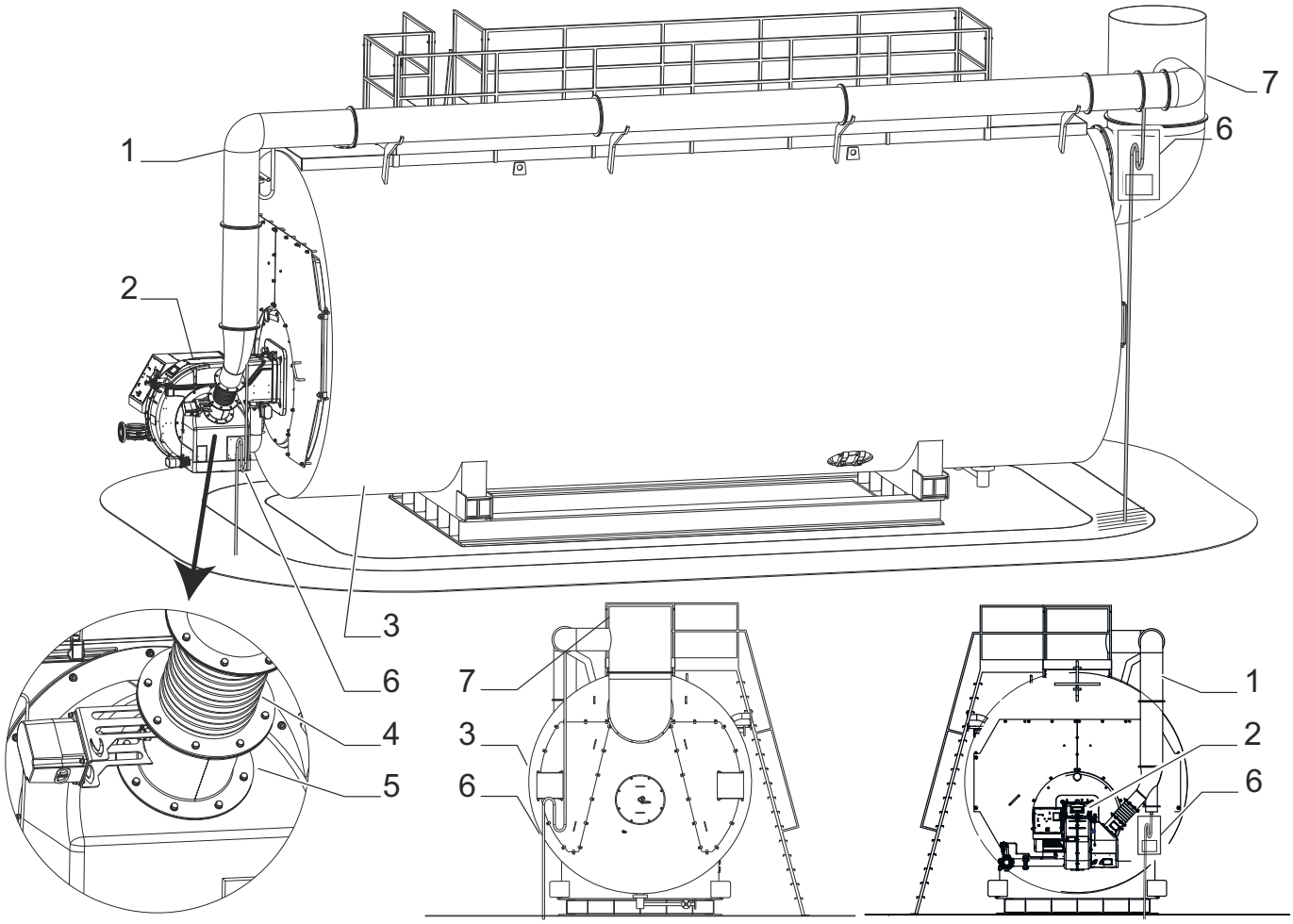


Keys:
1 Stainless steel FGR pipe, insulated
2 Burner
3 Boiler
4 Bellow unit (a counter-flange supplied loose is to be welded to the FGR duct)
5 FGR butterfly valve
6 Siphon and condensate drainage
7 Stack

The temperature probe for flue gas temperature compensation must be installed on the chimney.
The internal diameter of the FGR conduit must be dimensioned considering a maximum speed of 10 m / s. Assume a volumetric flow rate of recirculatig fluegases for the dimensioning equal to 20% of the comburent air flow.

***ATTENTION! Pipe elbows increase pressure losses, so limit their use as much as possible.***

**Example:**

Let's say 4.816 kW is the maximum burner output:
required combustion air flow will then be 5.800 Stm³/h = 1,61 Stm³/s in standard conditions (15 °C; 1.013 mbar).

| | |
|---|---|
| Flue gas temperature: | 150 °C or 150 + 273,15 = 423,15 K |
| Ambient temperature: | 15 °C or 15 + 273,15 = 288,15 K |
| FGR flow for dimensioning: | 1,61 x 20% = 0,322 Stm3 / s |
| FGR flow corrected for flue gas temperature: | 0,322 x 423,15 / 288,15 = 0,473 m3 / s @ (t = 150 °C) |
| FGR pipe section: | 0,473 m3/s / 10 m/s = 0,0473 m2 |

So in this example, pipe internal diameter must be larger than 245 mm to ensure proper FGR flow.

* FGR = Flue gas recirculation system

## GAS TRAIN CONNECTIONS

The diagrams show the components of the gas trai included in the delivery and which must be fitted by the installer.The diagrams are in compliance with the current laws.

Gas train with valves group VGD and MBE with built-in gas pressure governor + gas pressure switch (PGMIN/LT)

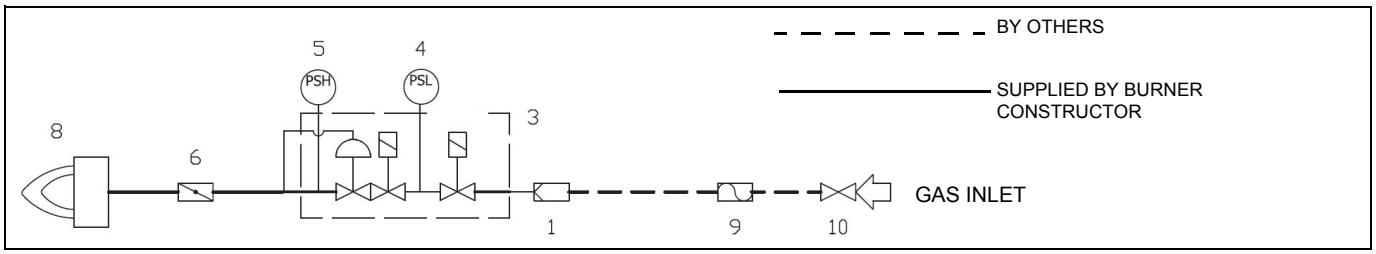


**Key**

| | | | |
|---|---|---|---|
| 1 | Filter | 6 | Butterfly valve |
| | | 8 | Main burner |
| 3 | Safety valve with built in gas governor | 9 | Bellows unit(*optional) |
| 4 | Pressure switch - PGMIN/LT | 10 | Manual valve(*optional) |
| 5 | Pressure switch PGMAX:included MBE, for VGD e MB-DLE Optional | | |

## GAS TRAIN CONNECTIONS

**The diagrams show the components of the gas trai included in the delivery and which must be fitted by the installer.The diagrams are in compliance with the current laws.**

**Procedure to install the double gas valve unit:**
**- two (2) gas flanges are required; they may be threaded or not depending on size;**
**- first step: install the flanges to prevent the entry of foreign bodies in the gas line;**
**- on the gas pipe, clean the already assembled parts and then install the valve unit;**
**- check gas flow direction: it must follow the arrow on the valve body;**
**- VGD20: make sure the O-rings are correctly positioned between the flanges and the valve;**
**- VGD40 and MBE: make sure the gaskets are correctly positioned between the flanges;**
**- fasten all the components with screws, according to the following diagrams;**
**- make sure bolts on the flanges are properly tightened;**

***WARNING: before executing the connections to the gas pipe network, be sure that the manual cutoff valves are closed.***

***ATTENTION: it is recommended to mount filter and gas valves to avoid that extraneous material drops inside the valves, during maintenance and cleaning operation of the filters (both the filters outside the valves group and the ones built-in the gas valves).***

***ATTENTION: once the gas train is mounted according to the diagram on Fig. 1, the gas proving test mus be performed, according to the procedure set by the laws in force.***

# MultiBloc MB-DLE - *Assembling the gas train*

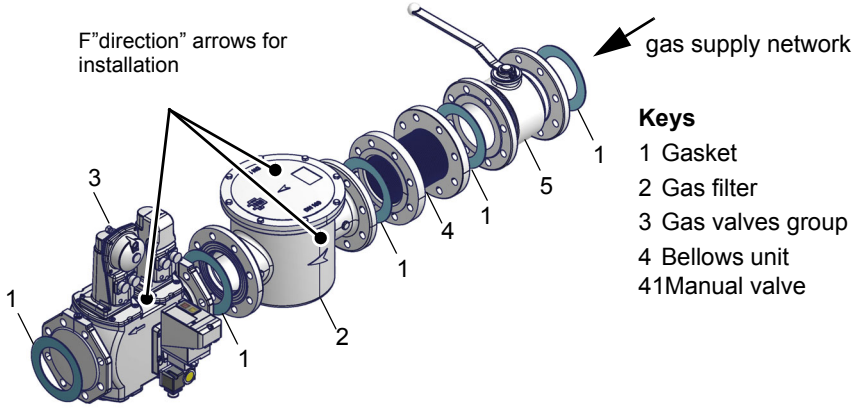


**Keys**
1 Gasket
2 Gas filter
3 Gas valves group
4 Bellows unit
41Manual valve

- Example of gas train

### *MULTIBLOC DUNGS MB-DLE 405..412*

**Mounting**

1. Mount flange onto tube lines: use appropriate sealing agent (see Fig. 8);
2. insert MB-DLE: note position of O rings (see Fig. 8);
3. tighten screws A, B, C and D (Fig. 6 - Fig. 7), accordind to the mounting positions (Fig. 9);
4. after installation, perform leakage and functional test;
5. disassembly in reverse order.

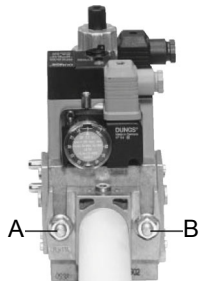


Fig. 6

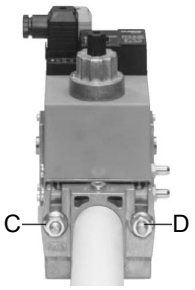


Fig. 7

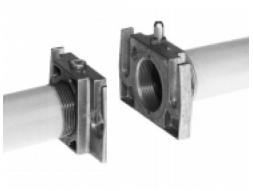

Fig. 8

MOUNTING POSITIONS

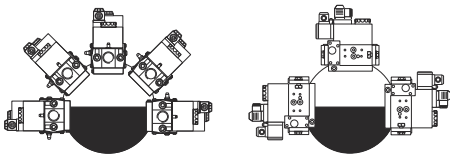

Fig. 9

### *MULTIBLOC DUNGS MB-DLE 415..420*

**Mounting**

1. Loosen screws A and B **do not** unscrew (Fig. 10 - Fig. 11).
2. unscrew screws C and D (Fig. 10 - Fig. 11).
3. Remove MultiBloc between the threaded flanges (Fig. 11).
4. After mounting, perform leakage and functional tests.

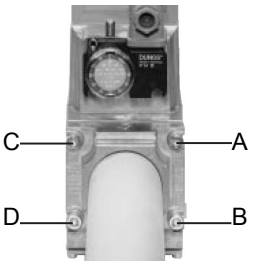


Fig. 10

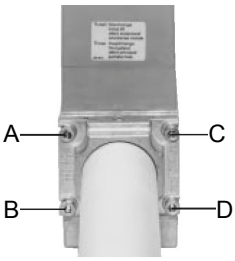


Fig. 11

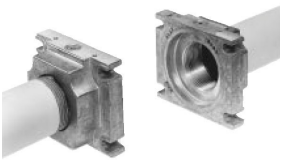

Fig. 12

MOUNTING POSITIONS

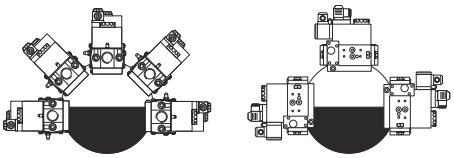

Fig. 13

# MultiBloc MBE

**Example of gas train MBE**

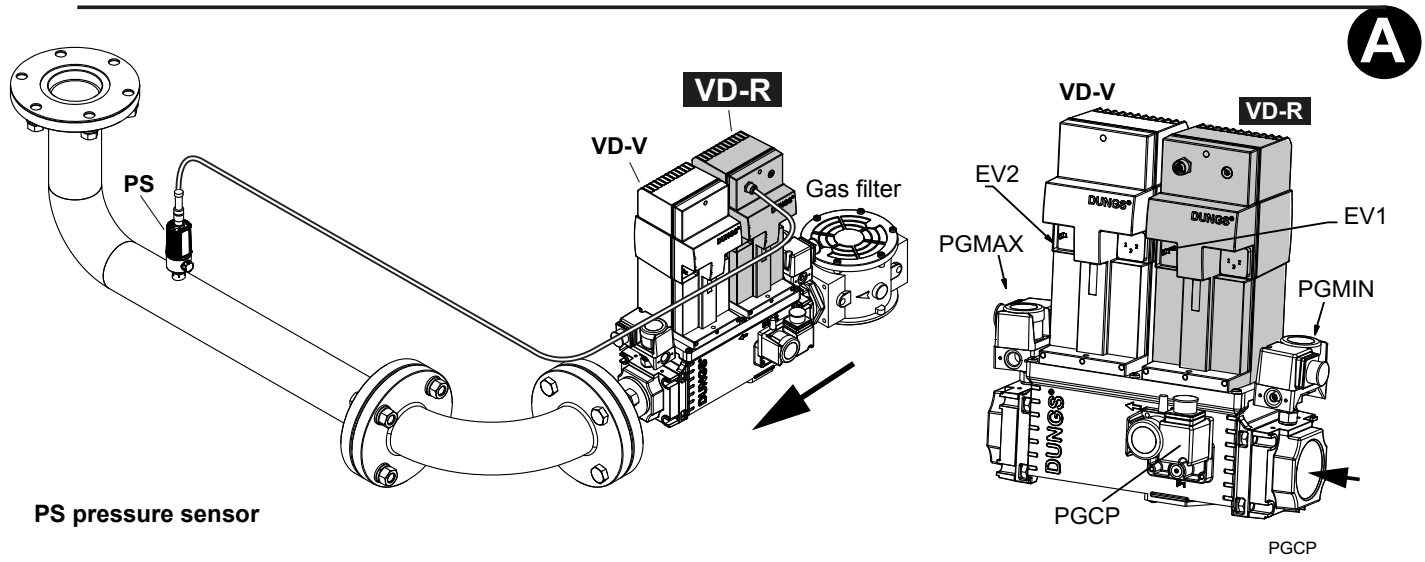


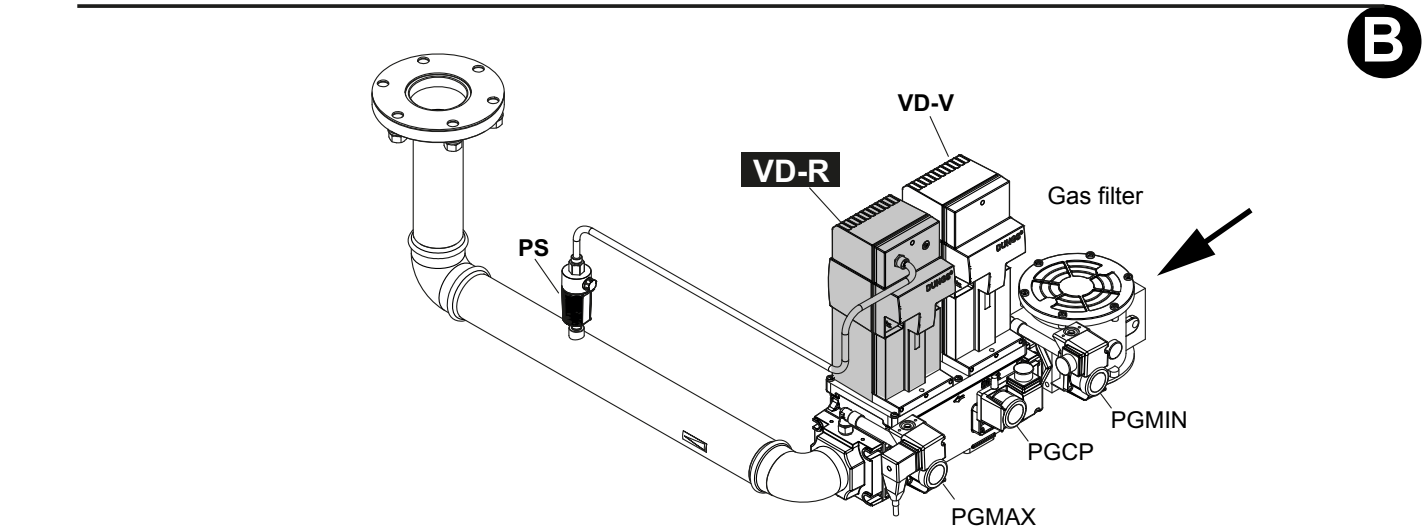


To mount the gas train, proceed as follows:

1) in case of threaded joints: use proper seals according to the gas used; in case of flanged joints: place a gasket between the elements;
2) fasten all the items by means of screws, according to the diagrams showed, observing the mounting direction for each item;

**NOTE:** the bellows unit, the manual cutoff valve and the gaskets are not part of the standard supply.

***ATTENTION: once the gas train is mounted according, the gas proving test mus be performed, according to the procedure set by the laws in force.***

***ATTENTION: it is recommended to mount filter and gas valves to avoid that extraneous material drops inside the valves, during maintenance and cleaning operation of the filters (both the filters outside the valves group and the ones built-in the gas valves).***

***WARNING: Slowly open the fuel cock to avoid breaking the pressure regulator.***

## Threaded train with MultiBloc MBE - Mounting

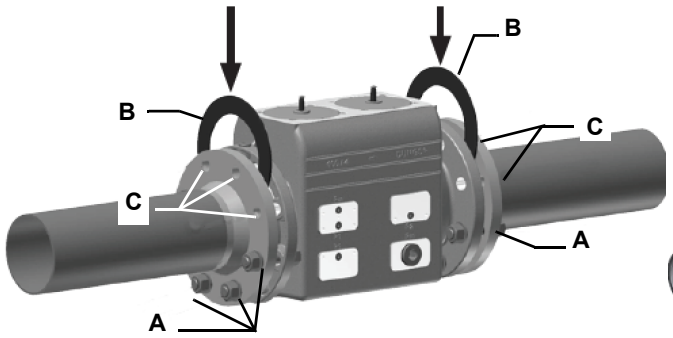


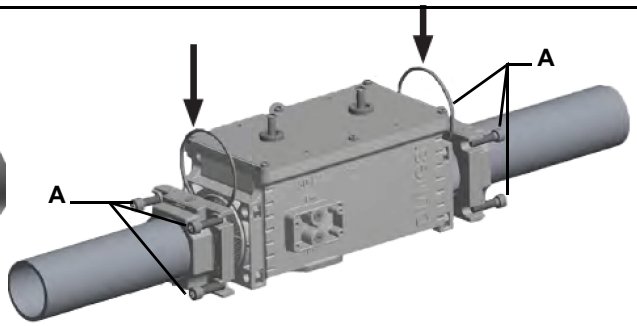


1. Insert studs A.
2. Insert seals B.
3. Insert studs C.
4. Tighten studs in accordance with section 8.
**Ensure correct position of the seal!**
5. Perform leak and functional tests after mounting.
6. Screws (4xM5x20) for VD assembly are supplied.

1. Mount flange into pipe systems. Use appropriate sealing agent.
2. Insert VB together with supplied O-rings.
Check current position of O-rings.
3. Tighten supplied screws (8xM8x30) in accordance with section 8.
4. Screws (4xM5x25) for VD assembly are supplied.
5. After installation, perform leakage and functional test.
6. Disassembly in reverse order.

## Mounting position MBE / VB / VD

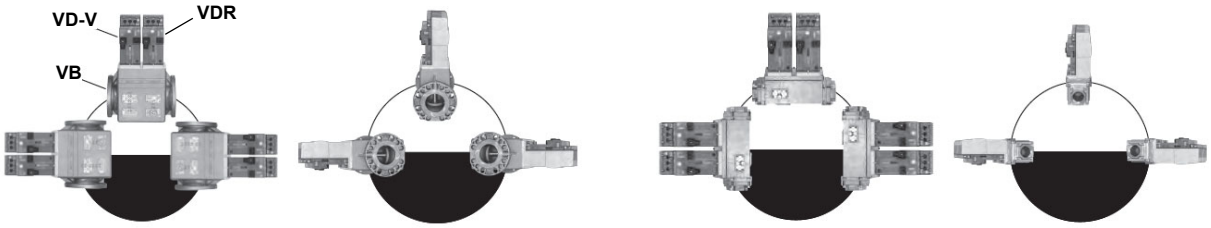


## Mounting VD-R & PS-...

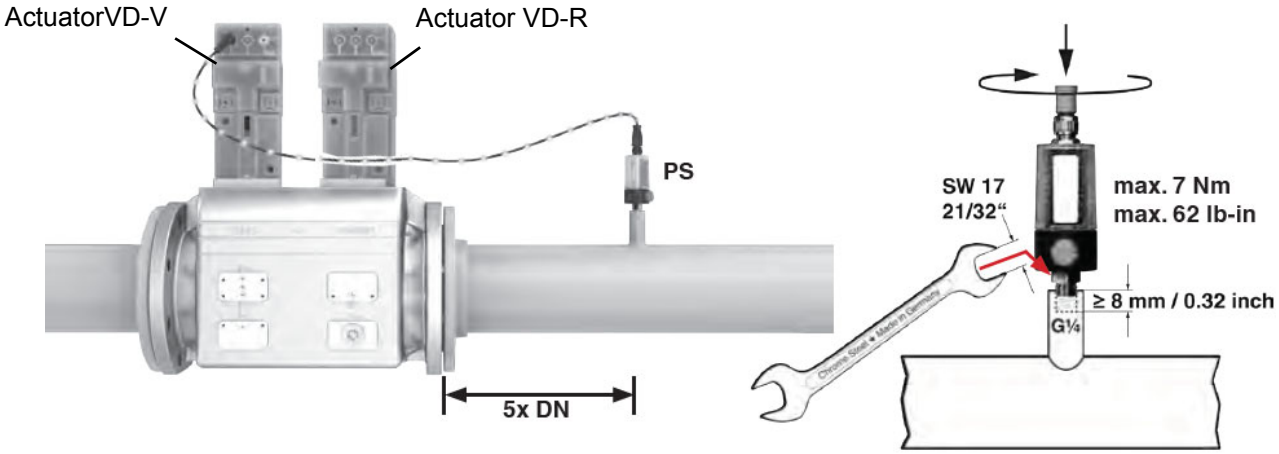


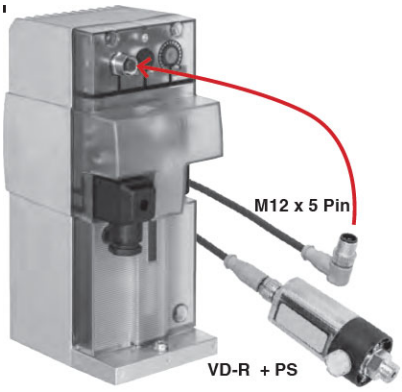


1. Gas pressure regulation is possible with VD-R and PS pressure sensor only.
**WARNING! For US/CN installation, the output pressure must be monitoried by min. and max. pressure switches set to +/- 20% of the setpoint.**
2. Mounting on pipe. Sensor position: 5x DN according to MBE. Pipe fitting with female thread size ¼, mount sensor with seal, observe torque.
3. The pressure sensor includes a vent limiter according to UL 353 and ANSI Z21.18/CSA 6.3. No venting required in locations where vent limiters are accepted by the jurisdiction.
4. Only PS pressure sensors specified by DUNGS are authorised to be connected to the VD-R's M12 interface.
5. Only PS cables specified by DUNGS are authorised to be used to connect the PS

- The actuator **VD-V** does not need any adjustment (funzione ON-OFF)
- The actuator **VD-R** It must be combined with the **PS** sensor (include regolatore di pressione)
- The **PS sensor** chosen based on the necessary pressure (there are 3 models)

# Siemens VGD20.. e VGD40..

**Siemens VGD20.. and VGD40.. gas valves - with SKP2.. (pressure governor)**

- Connect the reference gas pipe (**TP** in figure; 8mm-external size pipe supplied loose), to the gas pressure nipples placed on the gas pipe, downstream the gas valves: gas pressure must be measured at a distance that must be at least 5 times the pipe size.
- Leave the blowhole free (**SA** in figure). Should the spring fitted not permit satisfactory regulation, ask one of our service centres for a suitable replacement.

***Caution: the SKP2 diaphragm D must be vertical (see Fig. 1).***

***WARNING: removing the four screws BS causes the device to be unserviceable!***

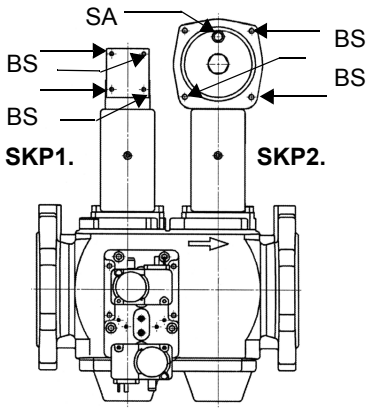


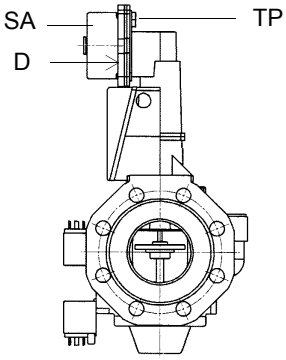


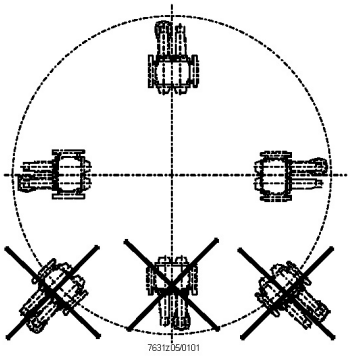

SIEMENS VGD..MOUNTING POSITIONS

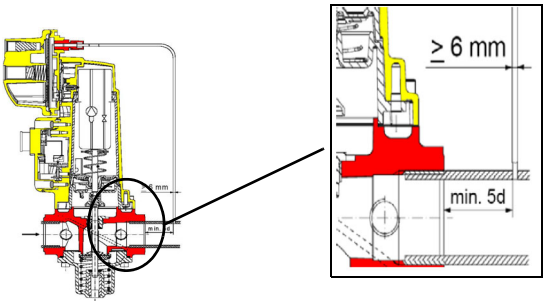


**Siemens VGD valves with SKP actuator:**
The pressure adjusting range, upstream the gas valves group, changes according to the spring provided with the valve group.

Fig. 14

## Gas valveversion with SKP2 (built-in pressure stabilizer)

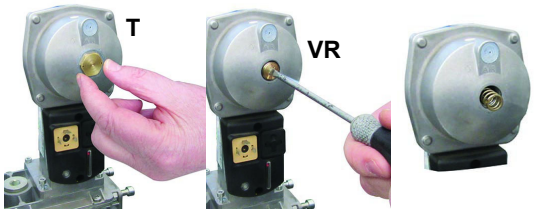


To replace the spring supplied with the valve group, proceed as follows:
- Remove the cap (T)
- Unscrew the adjusting screw (VR) with a screwdriver
- Replace the spring

Stick the adhesive label for spring identification on the type plate.

| Performance range (mbar) | 0 - 22 | 15 - 120 | 100 - 250 |
|---|---|---|---|
| Spring colour | **neutral** | **yellow** | **red** |

## Gas Filter (if provided)

The gas filters remove the dust particles that are present in the gas, and prevent the elements at risk (e.g.: burner valves, counters and regulators) from becoming rapidly blocked. The filter is normally installed upstream from all the control and on-off devices.

***ATTENTION: it is reccomended to install the filter with gas flow parallel to the floor in order to prevent dust fall on the safety valve during maintenance operation.***

***Integrated proving system burners equipped with BT3x***

When the burner is switched off, the BT3x device proceeds with an evacuation test, opens the EV1 valve (burner side) and makes sure to bring the test volume (space between EV2 and EV1) to atmospheric pressure.

The BT3xx device uses only one pressure switch (PGMIN/LT) mounted between the EV1-EV2 valves which acts as a leak test in the "Gas valve seal" test phase and a minimum pressure pressure switch during "Start and burner operation" .

The BT3xx equipment performs a tight check of the gas valves according to the pressure felt by the pressure switch installed between the valves (PGMIN / LT).

**Case A: the pressure between the valves EV1 and EV2 is equal to zero.**

- The BT3xx device opens the EV1 valve for a few seconds and fills the chamber between EV1 and EV2.
- The PGMIN / LT pressure switch senses the pressure (which remains present and stable) and closes the contact giving consent to continue the cycle to the equipment.

**Case B: presence of pressure between the valves EV1 and EV2.**

- In this case the BT3xx device opens the EV2 volvo to evacuate the gas between EV1 and EV2.
- In this way the PGMIN / LT pressure switch permanently feels zero pressure and opens the contact.
- The cycle continues by opening the valve EV1 to pressurize the section between the valves EV1 and EV2.
- The PGMIN / LT pressure switch senses the increase in pressure (which remains present and stable), closes the contact giving consent to the equipment to continue the starting cycle.

When the burner is switched off due to the intervention of the thermostat / boiler pressure switch, the BT3xx keeps the EV2 gas valve open to allow the pressure between the gas valves to be released and the PGMIN / LT pressure switch contact to rest and ready to restart the burner.

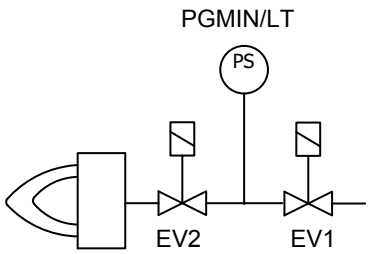


## *ELECTRICAL CONNECTIONS*

***WARNING! Respect the basic safety rules. make sure of the connection to the earthing system. do not reverse the phase and neutral connections. fit a differential thermal magnet switch adequate for connection to the mains.***

***WARNING! before executing the electrical connections, pay attention to turn the plant's switch to OFF and be sure that the burner's main switch is in 0 position (OFF) too. Read carefully the chapter "WARNINGS", and the "Electrical connections" section.***

***ATTENTION: Connecting electrical supply wires to the burner teminal block MA, be sure that the ground wire is longer than phase and neutral ones.***

To execute the electrical connections, proceed as follows:

1 remove the cover from the electrical board, unscrewing the fixing screws;
2 execute the electrical connections to the supply terminal board as shown in the attached wiring diagrams;
3 check the direction of the fan motor (see next paragraph);
4 refit the panel cover.

***DANGER! Incorrect motor rotation can seriously damage property and injure people.***

### *Rotation of electric motor*

Once the electrical connection of the burner is executed, remember to check the rotation of the electric motor. The motor should rotate according to the "arrow" symbol on the body. In the event of wrong rotation, reverse the three-phase supply and check again the rotation of the motor.

***CAUTION: check the motor thermal cut-out adjustment***

**NOTE: the burners are supplied for three-phase 380 V or 400 V supply, and in the case of three-phase 220 V or 230 V supply it is necessary to modify the electrical connections into the terminal box of the electric motor and replace the overload tripped relay.**

## OIL TRAIN CONNECTIONS

### Hydraulic diagrams for light oil supplying circuits

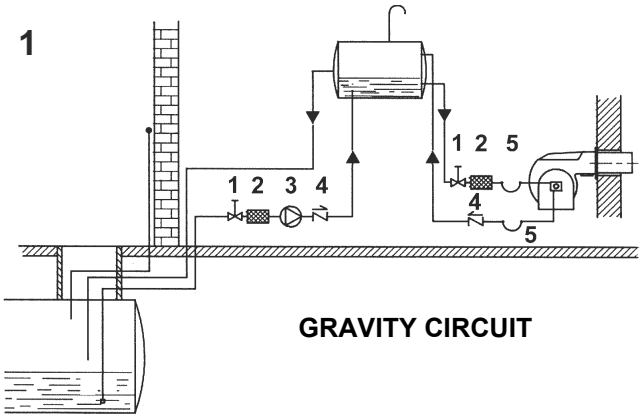


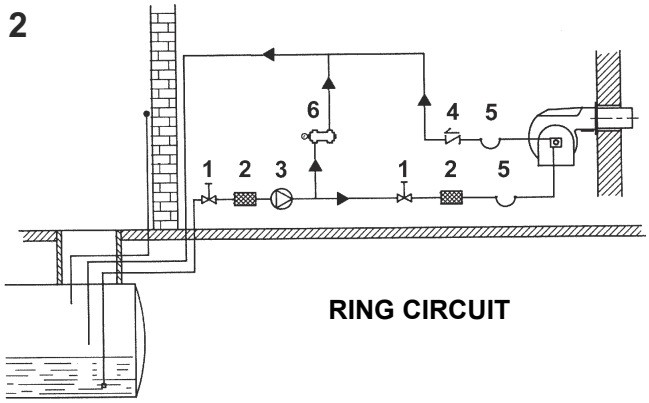


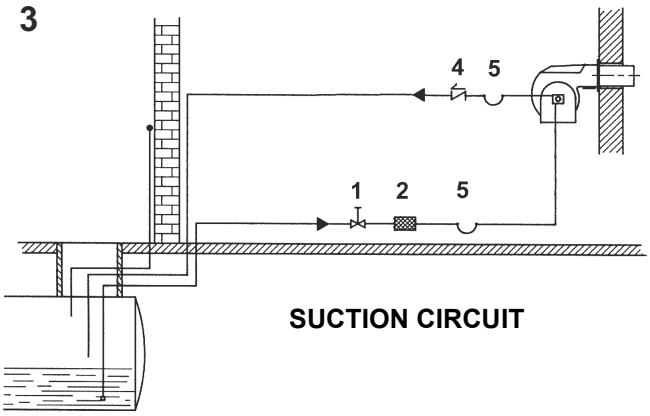


**Key**

1 Manual valve
2 Light oil filter
3 Light oil feeding pump
4 One way valve
5 Flexible hoses
6 Relief valve

**NOTE:** in plants where gravity or ring feed systems are provided, install an automatic interception device.

### Installation diagram of light oil pipes

**please read carefully the “warnings” chapter at the beginning of this manual.**

Fig. 13 - Double-pipe system

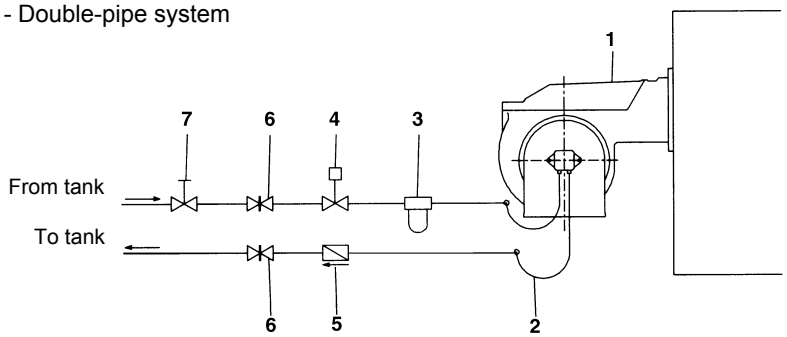


The burner is supplied with filter and flexible hoses, all the parts upstream the filter and downstream the return flexible hose, must be installed by the customer. As far as the hoses connection, see the related paragraph.

**Key**

1 Burner
2 Flexible hoses (fitted)
3 Light oil filter (fitted)
4 Automatic interceptor (*)
5 One-way valve (*)
6 Gate valve
7 Quick-closing gate-valve (outside the tank or boiler rooms)

(*) Only for installations with gravity, siphon or forced circulation feed systems. If the device installed is a solenoid valve, a timer must be installed to delay the valve closing. The direct connection of the device without a timer may cause pump breaks.

Depending on the installed pump, it is possible to design the plant for single or double pipe feeding line

**Single-pipe system:** a single pipe drives the oil from the tank to the pump's inlet. Then, from the pump, the pressurised oil is driven to the nozzle: a part comes out from the nozzle while the othe part goes back to the pump. In this system, the by-pass plug, if provided, must be removed and the optional return port, on the pump's body, must be sealed by steel plug and washer.

**Double-pipe system:** as for the single pipe system, a pipe that connects the tank to the pump's inlet is used besides another pipe that connects the pump's return port to the tank, as well. The excess of oil goes back to the tank: this installation can be considered self-bleeding. If provided, the inside by-pass plug must be installed to avoid air and fuel passing through the pump.

Burners come out from the factory provided for double-pipe systems. They can be suited for single-pipe system (recommended in the case of gravity feed) as decribed before.To change from a 1-pipe system to a 2-pipe-system, insert the by-pass plug **G** (as for ccw-rotation- referring to the pump shaft).

**Caution:** Changing the direction of rotation, all connections on top and side are reversed.**HP UHE series pumps**: a kit (Art.-Nr.: 0841211) is required for the transition from 2-pipe to 1-pipe system

**Suntec T**

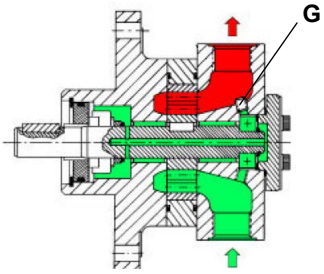


**Suntec TA**

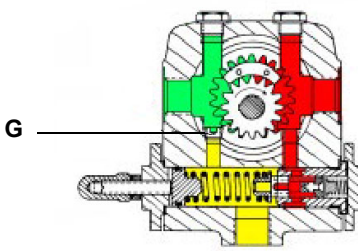


## *About the use of fuel pumps*

- Do not use fuel with additives to avoid the possible formation over time of compounds which may deposit between the gear teeth, thus obstructing them.
- After filling the tank, wait before starting the burner. This will give any suspended impurities time to deposit on the bottom of the tank, thus avoiding the possibility that they might be sucked into the pump.
- On initial commissioning a "dry" operation is foreseen for a considerable length of time (for example, when there is a long suction line to bleed). To avoid damages inject some lubrication oil into the vacuum inlet.
- Care must be taken when installing the pump not to force the pump shaft along its axis or laterally to avoid excessive wear on the joint, noise and overloading the gears.
- Pipes should not contain air pockets. Rapid attachment joint should therefore be avoided and threaded or mechanical seal junctions preferred. Junction threads, elbow joints and couplings should be sealed with removable sg component. The number of junctions should be kept to a minimum as they are a possible source of leakage.
- Do not use PTFE tape on the suction and return line pipes to avoid the possibility that particles enter circulation. These could deposit on the pump filter or the nozzle, reducing efficiency. Always use O-Rings or mechanical seal (copper or aluminium gaskets) junctions if possible.
- An external filter should always be installed in the suction line upstream the fuel unit.

***ATTENTION**: before the burner first start, it is mandatory to fill the adduction pipes with diesel fuel and bleed out residual air bubbles. Prior to switching on the burner, check direction of rotation of the pump motor by briefly pressing the starter switch; ensure there are no anomalous sounds during equipment operation, and only then turn on the burner. Neglect to comply with this requirement will invalidate the burner warranty.*

| **HP-Technick UHE-A..** | |
|---|---|
| Oil viscosity | 3 ÷ 75 cSt |
| Oil temperature | 0 ÷ 150°C |
| Min. suction pressure | - 0.45 bar to avoid gasing |
| Max. suction pressure | 5 bar |
| Max. return pressure | 5 bar |
| Rotation speed | 3600 rpm max. |

1. Connection for manometer 1 – delivery (M1) – G1/4
2. Connection for manometer 2 – suction (M2) – G1/4
3. Connection for manometer 3 (M3)

A. Suction connection– G1/2
D. Direct - clockwise
I. Indirect – counter clockwise
R. By-pass connection– G1/2
S. Delivery connection – G1/2
VR. After removal of cover screw: pressure regulation

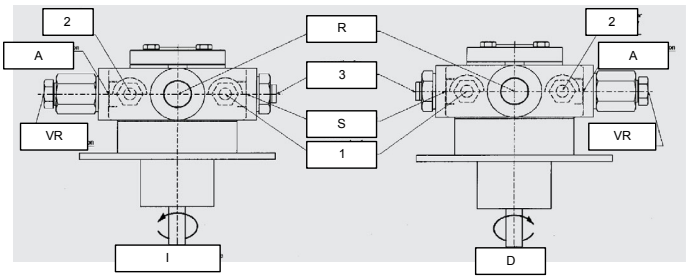

| Suntec T.. | |
|---|---|
| Viscosity | 3 - 75 cSt |
| Oil temperature | 0 - 150 °C |
| Minimum suction pressure | - 0.45bar to prevent gasing |
| Maximum suction pressure | 5 bar |
| Rated speed | 3600 rpm max. |

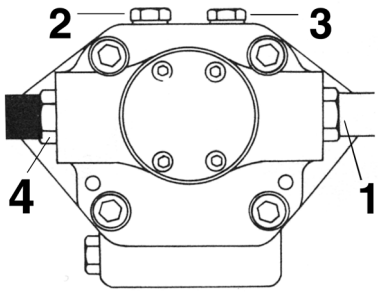


**Key**

1 Inlet G3/4
2 Pressure gauge port G1/4
3 Vacuum gauge port to measure the inlet vacuum G1/4
4 To pressure adjusting valve G3/4

"Note: pump with “C” rotation.

| Suntec TA.. | |
|---|---|
| Oil viscosity | 3 ÷ 75 cSt |
| Oil temperature | 0 ÷ 150°C |
| Min. suction pressure | - 0.45 bar to avoid gasing |
| Max. suction pressure | 5 bar |
| Max. return pressure | 5 bar |
| Rotation speed | 3600 rpm max. |

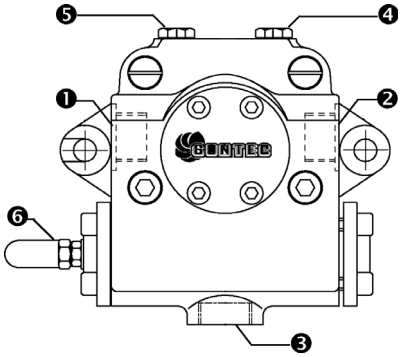


1. Inlet G1/2
2. To the nozzle G1/2
3. Return G1/2
4. Pressure gauge port G1/4
5. Vacuum gauge port G1/4
6. Pressure governor

## *Connecting the oil flexible hoses to the pump*

To connect the flexible oil hoses to the pump, proceed as follows, according to the pump provided:

1 remove the closing nuts A and R on the inlet and return connections of the pump;

2 screw the rotating nut of the two flexible hoses on the pump **being careful to avoid exchanging the lines**: see the arrows marked on the pump.

For further information, refer to the technical documentation of the pump.

.

| Suntec T+TV | HP Technik UHE-A | Suntec TA |
|---|---|---|
|   | 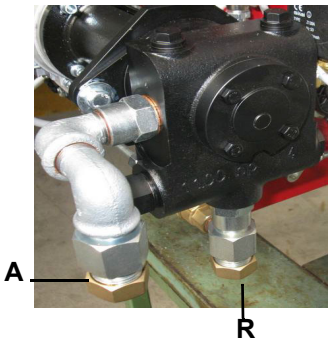  |   |

# ELECTRICAL CONNECTIONS

***DANGER! Be careful NOT to invert the servocontrol cables connections.***

***WARNING! Respect the basic safety rules. make sure of the connection to the earthing system. do not reverse the phase and neutral connections. fit a differential thermal magnet switch adequate for connection to the mains.***

***WARNING! before executing the electrical connections, pay attention to turn the plant's switch to OFF and be sure that the burner's main switch is in 0 position (OFF) too. Read carefully the chapter "WARNINGS", and the "Electrical connections" section.***

***ATTENTION: Connecting electrical supply wires to the burner teminal block MA, be sure that the ground wire is longer than phase and neutral ones.***

To execute the electrical connections, proceed as follows:

1 remove the cover from the electrical board, unscrewing the fixing screws;
2 execute the electrical connections to the supply terminal board as shown in the attached wiring diagrams;
3 check the direction of the fan motor (see next paragraph);
4 refit the panel cover.

***WARNING: (only for double stage and progressive burners) The burner is provided with an electrical bridge between terminals 6 and 7; when connecting the high/low flame thermostat, remove this bridge before connecting the thermostat.***

## *Rotation of electric motor*

Once the electrical connection of the burner is executed, remember to check the rotation of the electric motor. The motor should rotate according to the "arrow" symbol on the body. In the event of wrong rotation, reverse the three-phase supply and check again the rotation of the motor.

***CAUTION: check the motor thermal cut-out adjustment***

**NOTE: the burners are supplied for three-phase 380 V or 400 V supply, and in the case of three-phase 220 V or 230 V supply it is necessary to modify the electrical connections into the terminal box of the electric motor and replace the overload tripped relay.**

# PART III: OPERATION

## LIMITATIONS OF USE

**THE BURNER IS AN APPLIANCE DESIGNED AND CONSTRUCTED TO OPERATE ONLY AFTER BEING CORRECTLY CONNECTED TO A HEAT GENERATOR (E.G. BOILER, HOT AIR GENERATOR, FURNACE, ETC.), ANY OTHER USE IS TO BE CONSIDERED IMPROPER AND THEREFORE DANGEROUS.**

**THE USER MUST GUARANTEE THE CORRECT FITTING OF THE APPLIANCE, ENTRUSTING THE INSTALLATION OF IT TO QUALIFIED PERSONNEL AND HAVING THE FIRST COMMISSIONING OF IT CARRIED OUT BY A SERVICE CENTRE AUTHORISED BY THE COMPANY MANUFACTURING THE BURNER.**

**A FUNDAMENTAL FACTOR IN THIS RESPECT IS THE ELECTRICAL CONNECTION TO THE GENERATOR'S CONTROL AND SAFETY UNITS (CONTROL THERMOSTAT, SAFETY, ETC.) WHICH GUARANTEES CORRECT AND SAFE FUNCTIONING OF THE BURNER.**

**THEREFORE, ANY OPERATION OF THE APPLIANCE MUST BE PREVENTED WHICH DEPARTS FROM THE INSTALLATION OPERATIONS OR WHICH HAPPENS AFTER TOTAL OR PARTIAL TAMPERING WITH THESE (E.G. DISCONNECTION, EVEN PARTIAL, OF THE ELECTRICAL LEADS, OPENING THE GENERATOR DOOR, DISMANTLING OF PART OF THE BURNER).**

**NEVER OPEN OR DISMANTLE ANY COMPONENT OF THE MACHINE EXCEPT FOR ITS MAINTENANCE.**

**TO SECURE THE MACHINE, ACT ON THE ISOLATOR SWITCH. IN CASE OF ANOMALIES THAT REQUIRED A SHUT DOWN OF THE BURNER, IT'S POSSIBLE TO ACT ON THE AUXILIARY LINE SWITCH, LOCATED ON THE BURNER FRONT PANEL.**

**IN CASE OF A BURNER SHUT-DOWN, RESET THE CONTROL BOX BY MEANS OF THE RESET PUSHBUTTON. IF A SECOND SHUT-DOWN TAKES PLACE, CALL THE TECHNICAL SERVICE, WITHOUT TRYING TO RESET FURTHER.**

**WARNING: DURING NORMAL OPERATION THE PARTS OF THE BURNER NEAREST TO THE GENERATOR (COUPLING FLANGE) CAN BECOME VERY HOT, AVOID TOUCHING THEM SO AS NOT TO GET BURNT.**

***DANGER! Incorrect motor rotation can seriously damage property and injure people.WARNING: before starting the burner up, be sure that the manual cutoff valves are open and check that the pressure upstream the gas train complies the value quoted on paragraph "Technical specifications". Be sure that the mains switch is closed.***

***DANGER: During commissioning operations, do not let the burner operate with insufficient air flow (danger of formation of carbon monoxide); if this should happen, make the gas decrease slowly until the normal combustion values are achieved.***

***WARNING: never loose the sealed screws! otherwise, the device warranty will be immediately invalidate!***

Fig. 15 - Burner front panel

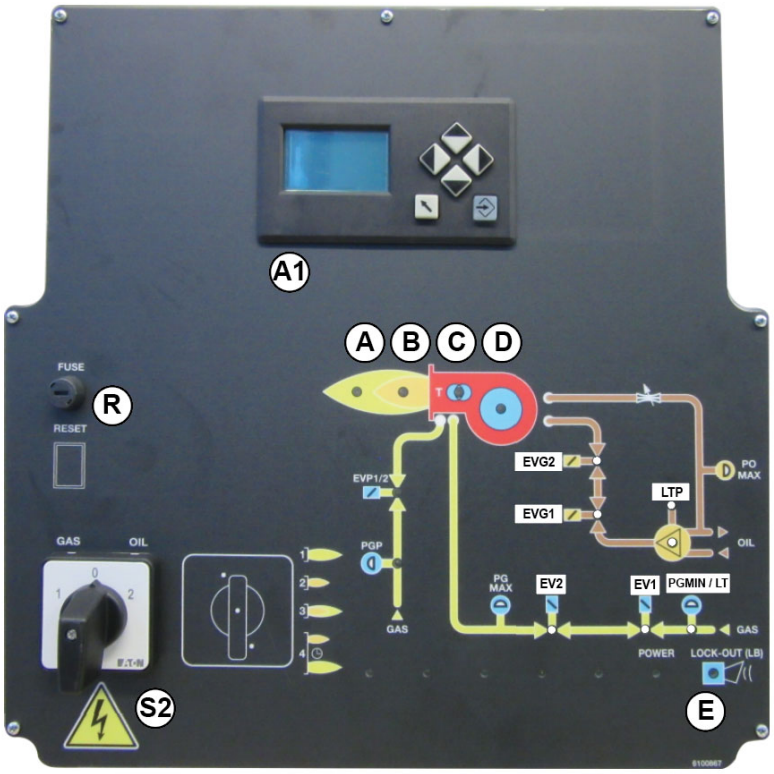


| | |
|---|---|
| A | High flame lamp |
| B | Low flame lamp |
| C | Ignition transformer lamp |
| D | Fan motor thermal cutout lamp |
| E | Burner lockout lamp |
| EVG1 | Solenoid valve lamp (Light oil) |
| EVG2 | Solenoid valve lamp (Light oil) |
| EV1 | Gas valve |
| EV2 | Gas valve |
| LTP | Oil pump in operation LED |
| LPGMIN/LT | Pressure switch - pgmin / Leakage control |
| A1 | UI300 operator panel display |
| R | Reset push button for control box |
| S2 | Fuel selection GAS-OIL |

**Fuel selection:**

- In order to start the burner with gas or light oil, the operator must commute the selector on the burner control panel on (1) = gas, or (2) = light oil.
  If the selector is set on (1) the gas cock must be open, while the light oil cock must be closed. Viceversa if the selector is set on (2).
  **CAUTION:** if the fuel chosen is oil, be sure the cutoff valves on the feed and return pipes are open.
- Check the control box is not locked; if so, reset it by means of the button on LMV panel.
- Check the series of thermostats and pressure switches turn the burner to on.

## *Gas operation*

- At the beginning of the start-up cycle, the actuator drives the air damper to the maximum opening position, then the fan motor starts up: the pre-purge phase begins.
- At the end of the pre-purge, the air damper is driven to the ignition position, the ignition transformer is energised (signalled by the light **B4** on the front panel) then, few seconds later, the EV1 and EV2 gas valves are energised (light G1 and G2 on the front panel).
- Few seconds after the gas valves opening, the ignition transformer is de-energised and light **B4** turns to off.
- The burner operates in the low flame stage; few seconds later the two-stages operation begins and the burner output increases or decreases, driven by the external thermostats (progressive burners) or by the modulator (fully-modulating burners).

## *Light oil operation*

- The fan motor starts and the pre-purge phase as well. Since the pre-purge phase must be carried out at the maximum air rate, the control box drives the actuator opening and when the maximum opening position is reached, the pre-purge time counting starts.
- At the end of the pre-purge time, the actuator is in the light oil ignition position: the ignition transformer is energised (lamp **B4** on); the ignitor gas valves and the light oil valves open. Few seconds after the valves opening, the transformer is de-energised and lamp **B4** turns off.
- The burner is now operating, meanwhile the actuator goes to the high flame position; after some seconds, the two-stage operation begins; the burner is driven automatically to high flame or low flame, according to the plant requirements.Operation in high or low flame is signalled by LED **B2** on the burner control panel.

The fuel is pushed into the pump to the nozzle at the delivery pressure set by the pressure governor. The solenoid valve stops the fuel immission into the combustion chamber. The fuel flow rate that is not burnt goes back to the tank through the return circuit. The nozzle is feeded at constant pressure, while the return line pressure is adjusted by means of the pressure governor controlled by an actuator.

# AIR FLOW AND FUEL ADJUSTMENT

***WARNING! During commissioning operations, do not let the burner operate with insufficient air flow (danger of formation of carbon monoxide); if this should happen, make the fuel decrease slowly until the normal combustion values are achieved.***
***WARNING! the combustion air excess must be adjusted according to the values in the following chart.***

| Recommended combustion parameters | | |
|---|---|---|
| Fuel | Recommended (%) $CO_2$ | Recommended (%) $O_2$ |
| Natural gas | 9 ÷ 10 | 3 ÷ 4,8 |
| Light oil | 11,5 ÷ 13 | 2,9 ÷ 4,9 |

## *(First) Start-up preliminary operations - gas supply*

Recommended actions to be carried out in sequence:

1 Check the burner and all its components are installed correctly
2 Check that all electrical and mechanical parts are connected correctly
3 Check that there is water or other vector fluids in the generator
4 Check that the ventilation gates/dampers in the plant are open and the stack is free
5 Connect the gauges used to adjust and check pressures on the incoming line and on the head, air and fuel side.
6 Open the thermostatic series and the safety chain
7 Turn the main switch on the panel front with the "MAN/AUTO" selector to position "0".
8 Select the GAS mode with the fuel selector on the front of the panel (if any)
9 Check the phase and neutral position is correct
10 Open the manual shut-off valves slowly, in order to prevent any water hammers that might seriously damage valves and pressure regulator
11 Check the sense of rotation of the electrical motors
12 Bleed the line, getting rid of all the air in the pipe as far as the main gas valve
13 Ensure the pressure entering the main valves is not excessive due to damage to or wrong adjustment of the line pressure regulator
14 Ensure the gas supply minimum pressure is at least equal to the pressure required by the pressure curves - burnt gas flow

***DANGER! Venting the air from the piping must take place in safe conditions, avoiding dangerous concentrations of fuel in the rooms. You must therefore ventilate the rooms and wait long enough for the gases to dissipate outside before switching on.***

***To ensure the proper operation of the flow sensors, the fuel/air pipes must be free of liquid residues such as oil or water. Also, make sure that the silencer is installed on the air intake.***

## *Adjustments - brief description*

The air and fuel rates adjustments must be performed at the maximum ouptput first (“high flame”): see the Lamtec.. related manual..

- Check that the combustion parameters are in the suggested limits.
- Check the flow rate measuring it on the counter or, if it was not possible, verifying the combustion head pressure by means of a differential pressure gauge, as described on par. “Measuring the gas pressure in the combustion head”.
- Then, adjust the combustion values by setting the “gas/air” ratio” curvepoints (see the Lamtec.. related manual).
- Set, now, the low flame output, in order to avoid the low flame output increasing too much or that the flues temperature gets too low to cause condensation in the chimney.

## SETTING THE BURNER CURVE

Initial home page: keep thermostat open. Burner remain in stand-by

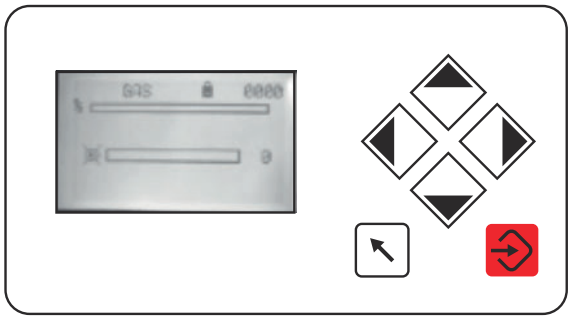

Unlock the controller: press ENTER

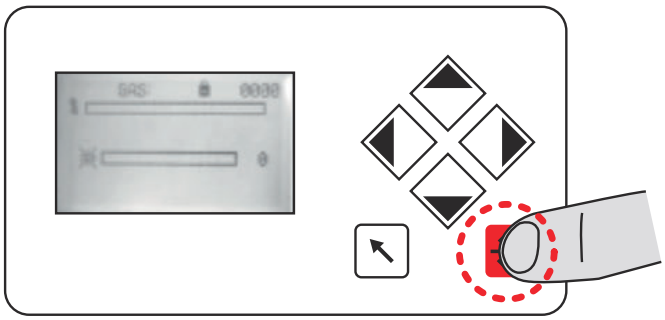

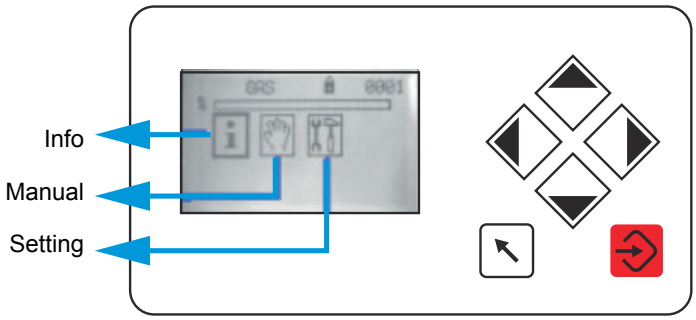


Press the right key to position on the Settings icon (indicated with wrench and hammer)

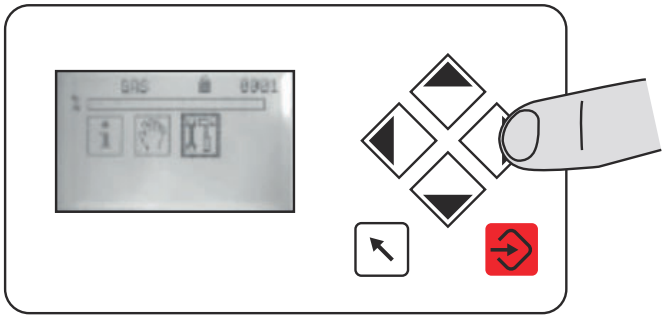

Press ENTER

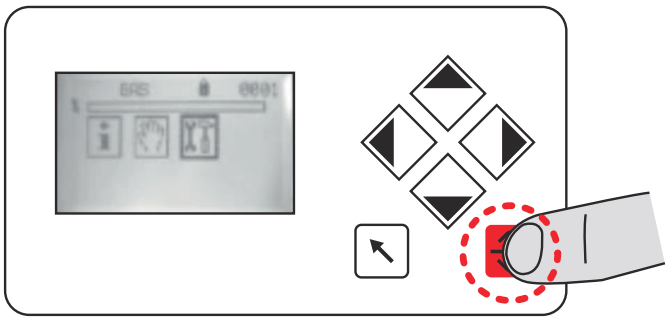

Press ENTER again after selecting 'the key icon'.

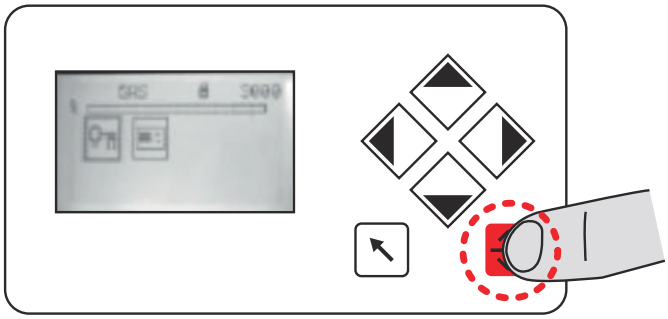

Keep the password “0000“ and confirm with ENTER.

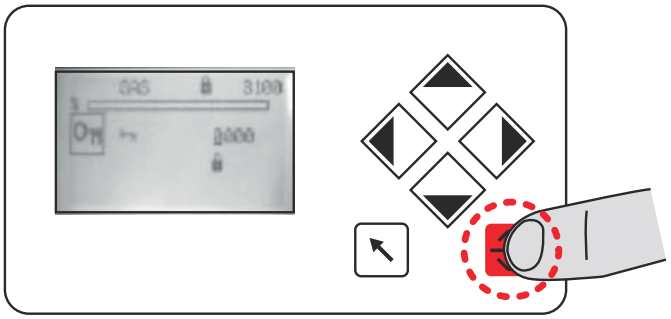


New page, level 1 unlocked

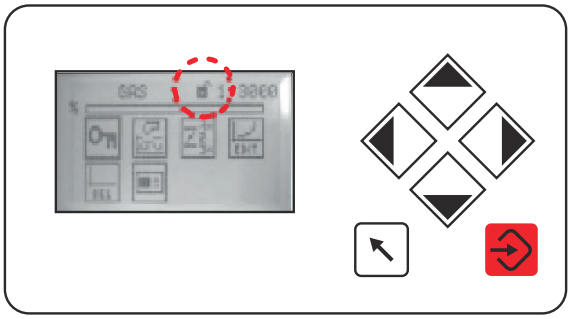


Right click to EDIT.

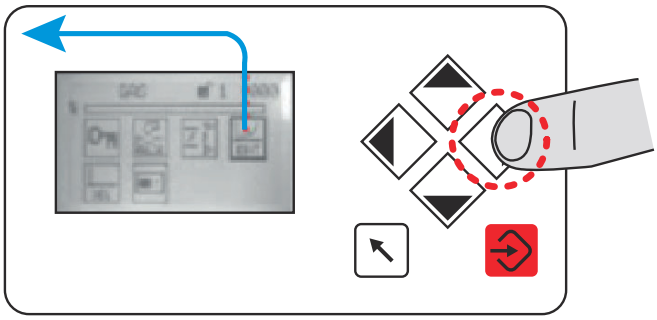

Press ENTER to enter the “curves page”.

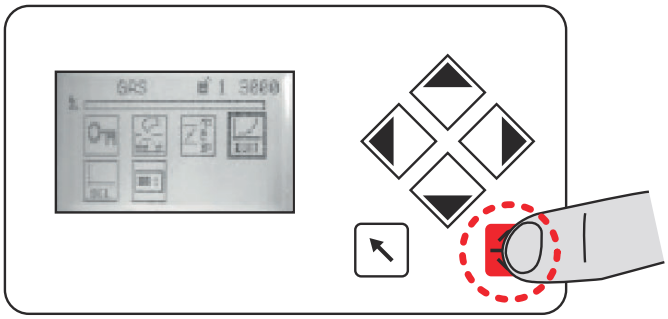


Air & gas position at burner’s ignition

1 ignition position

2 air servomotor position (digit)

1 gas servomotor position (digit)

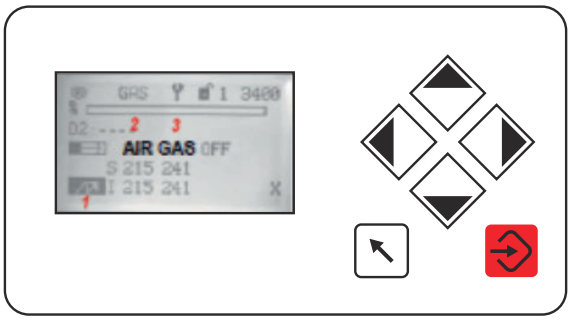


**VALUES VARY FROM BURNER TO BURNER**

Close the thermostat the burner starts.

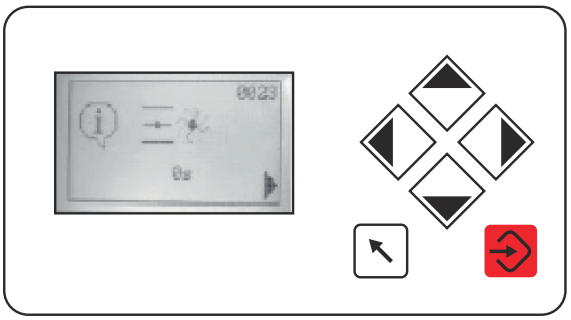


Pre-purge.

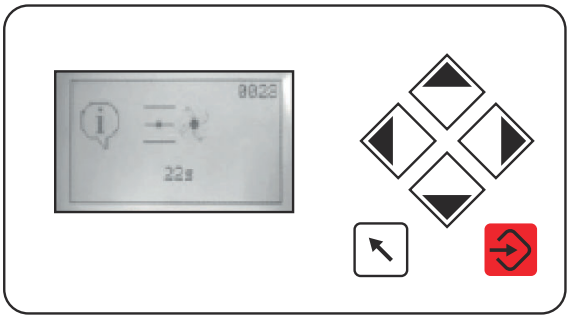


The controller moves the servomotors to the ignition position and excites the ignition transformer.

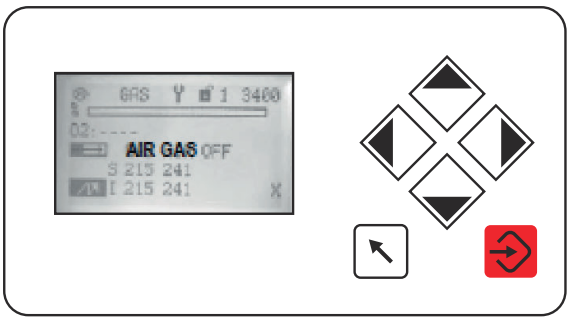


If the burner starts with those settings, this page will appear:

If the burner does not start with those settings the chapter "SETTING THE IGNITION POINT WITH BURNER IN STAND-BY"

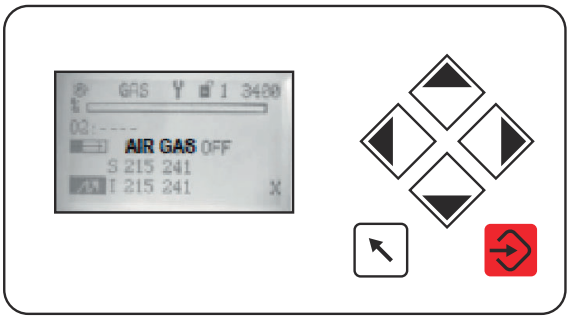


## *SETTING THE IGNITION POINT WITH BURNER IN STAND BY*

In case of troubles, the burner will go on lock?out mode and the reason will be indicated on the display.

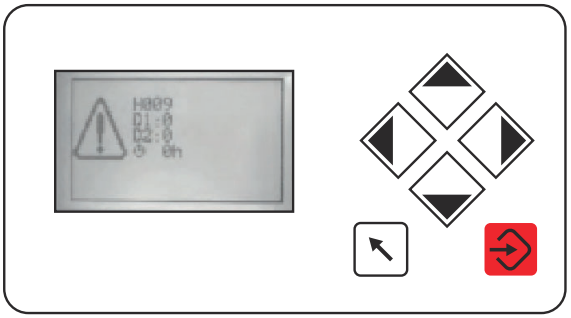

Check the lock code & press ENTER to unlock.

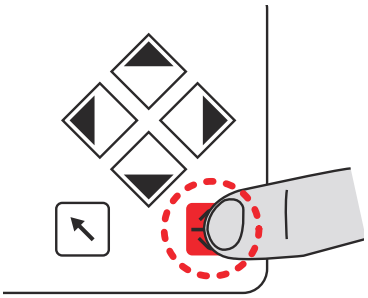

Press ENTER to modify the positions (burner in stand-by)

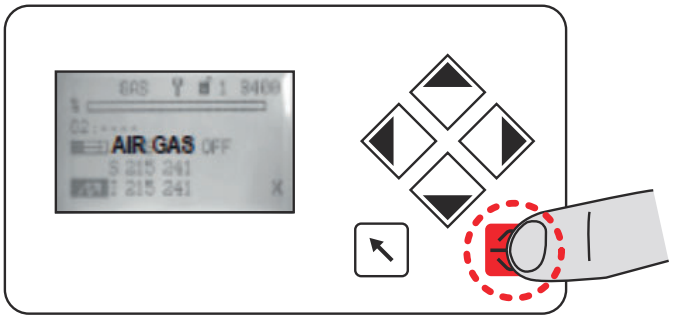


Click up to increase the gas opening position or down to decrease it.

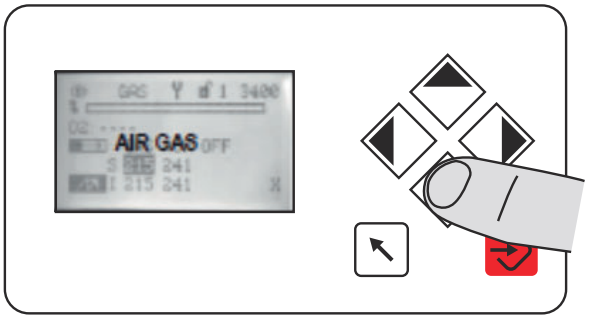


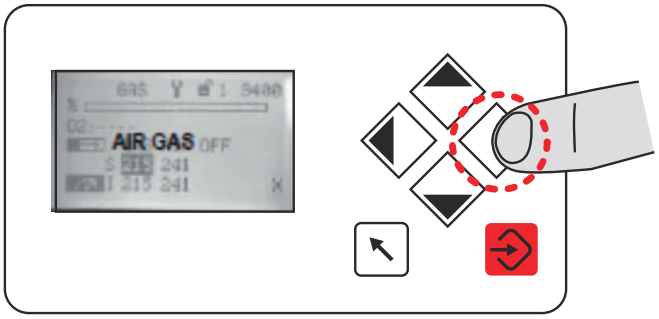


Clickup to increase the air opening position or down to decrease it.

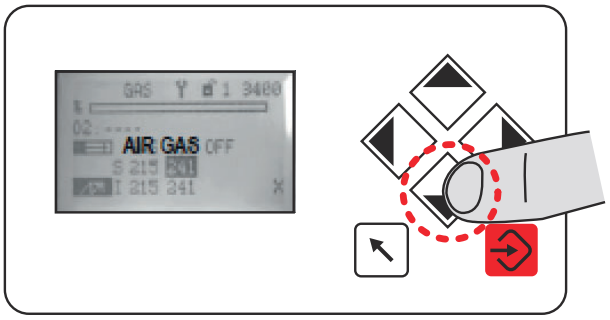

Press ENTER to save the new settings.

**CLOSE THE THERMOSTAT LINE**

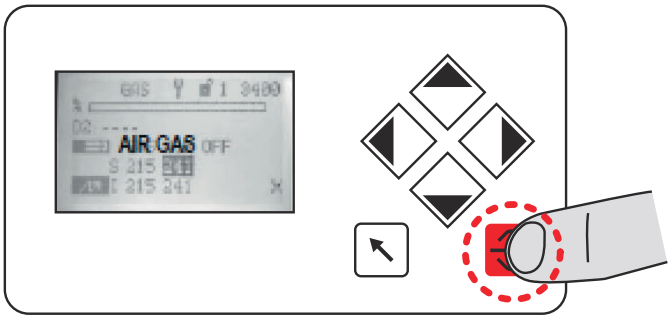


## *BURNER OPERATING: SETTING PARAMETERS*

Check the combustion quality (with a flue gas analyzer). To modify the combustion valves and adjust servomotors position (gas and air), press ENTER.

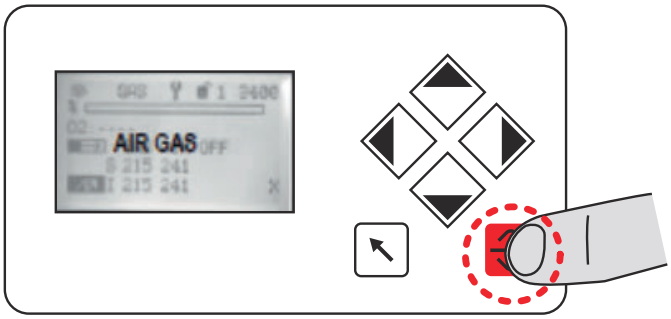


Click up to increase the gas opening position or down to decrease it.

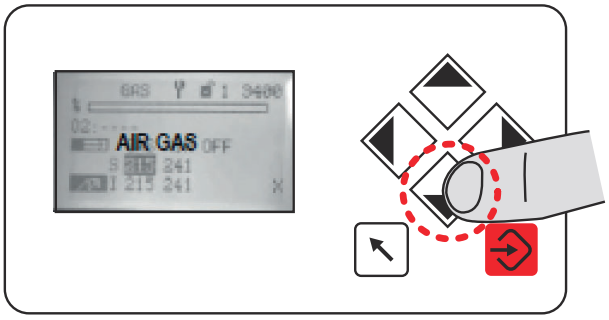


Right click to move from gas servomotor adjustment to air servomotor adjustment.

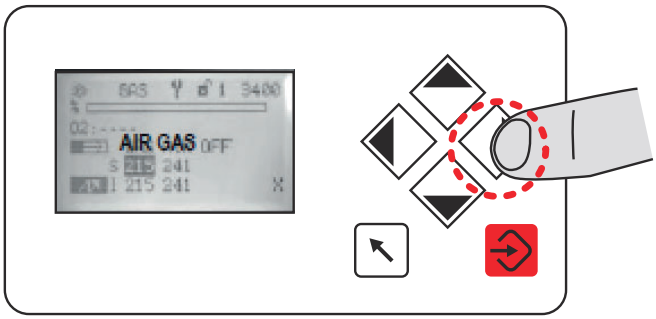


Click up to increase the air opening position or down to decrease it.

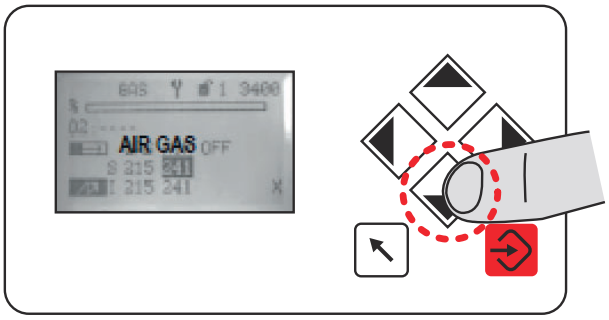

Press ENTER to save the new settings.

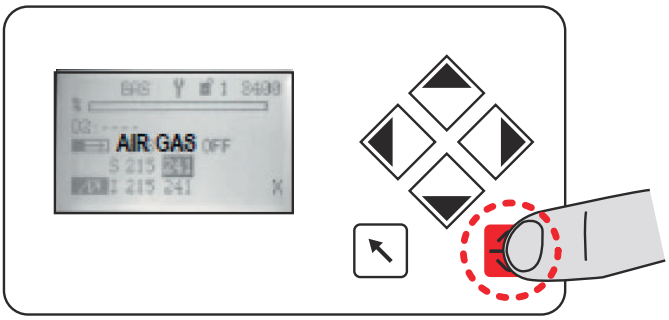


Click up to quit the ignition position.

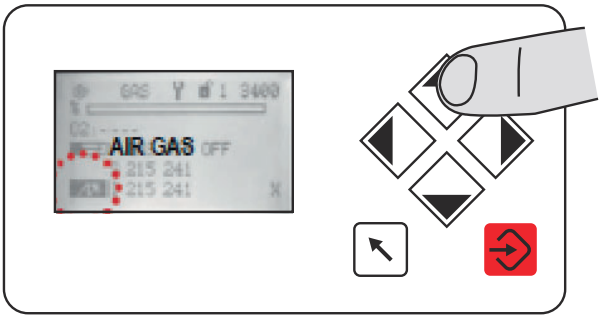


Check the combustion quality in all positions (from minimum to maximum output) and adjust the gas and air setting if necessary (as indicated on chapter “SETTING THE IGNITION POINT WITH BURNER IN STAND?BY”).

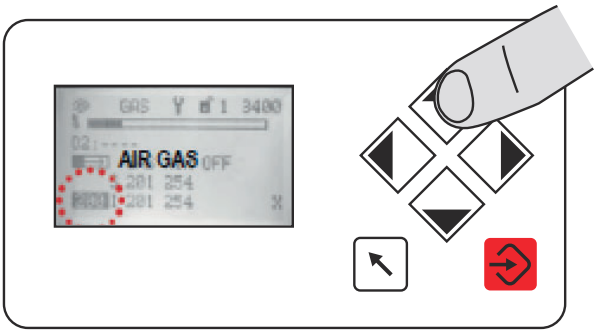


Set the maximum load position 999, according to the maximum output required by the boiler. If necessary, set the inlet gas pressure (at the exit of the gas pressure reducer). Check the output combustible and the quality of combustion in all positions and adjust gas and air if necessary (see chapter “SETTING THE IGNITION POINT WITH BURNER IN STAND?BY”).

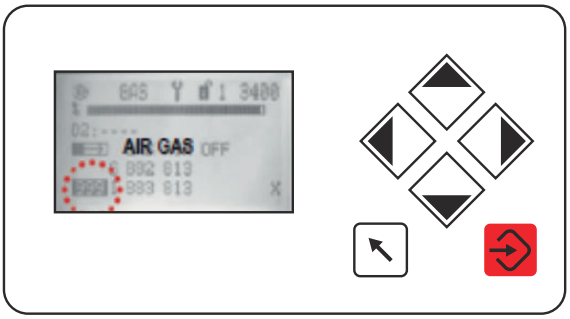


Press EXIT to quit the combustion settings.

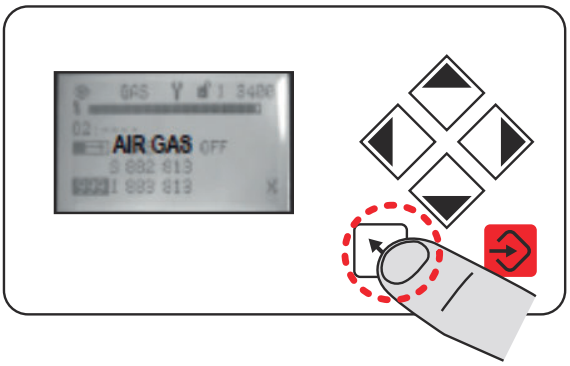

Press EXIT again to quit main menu.

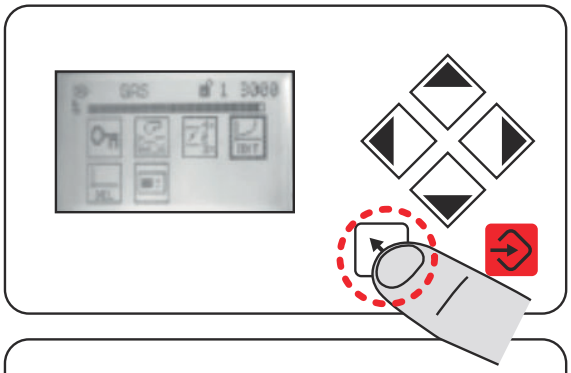


Press EXIT again to quit settings.

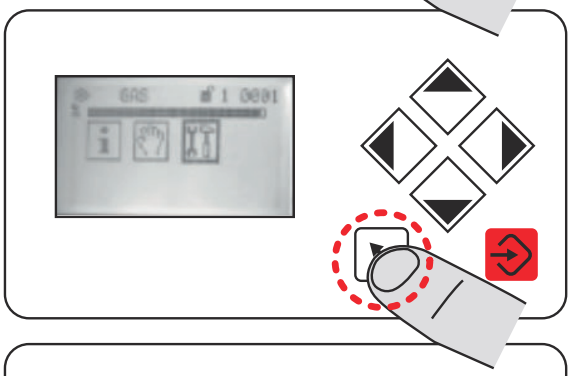


The burner runs now in automatic mode.

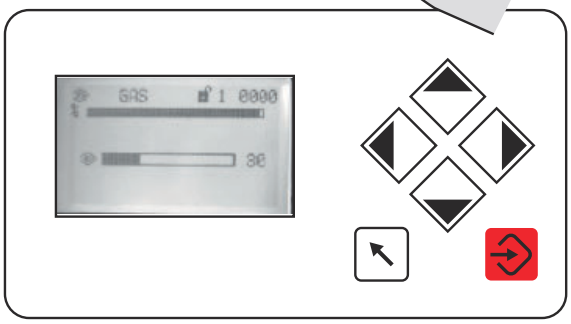


In case of troubles, the burner will go on lock?out mode and thereason will be indicated on the display.

Exemple:

H009 – lock-out code

D1 - diagnostic 1

D2 - diagnostic 2

xxh - operation hours

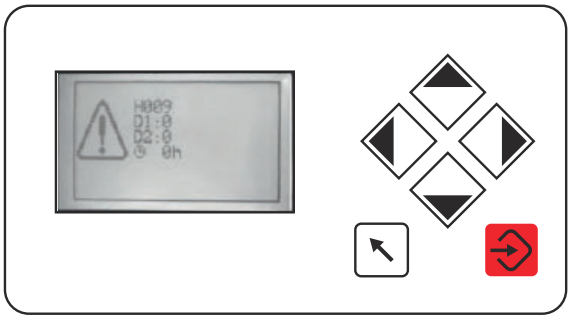


Check the lock code & press ENTER to unlock.

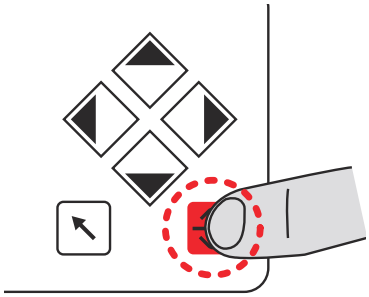

If the ignition setting is not good enough (e.g. too much air), the burner cannot start. In that case adjust again the ignition point see chapter “SETTING THE BURNER CURVE”.

Otherwise make sure that no other reason may cause the ignition failure.

***CAUTION! The fuel air calibration procedure is the same for both gas and diesel. In the display will be indicated Gas or Diesel.***

## *Adjusting the gas valves group*

### Multibloc MB-DLE

The multibloc unit is a compact unit consisting of two valves, gas pressure switch, pressure stabilizer and gas filter.

The valve is adjusted by means of the **RP** regulator after slackening the locking screw **VB** by a number of turns. By unscrewing the regulator **RP** the valve opens, screwing the valve closes. To set the fast opening remove cover **T**, reverse it upside down and use it as a tool to rotate screw **VR**. Clockwise rotation reduces start flow rate, anticlockwise rotation increases it.

Do not use a screwdriver on the screw **VR**!

The pressure stabilizer is adjusted by operating the screw **VS** located under the cover **C**. By screwing down the pressure is increased and by unscrewing it is reduced.

Note: the screw **VSB** must be removed only in case of replacemente of the coil.

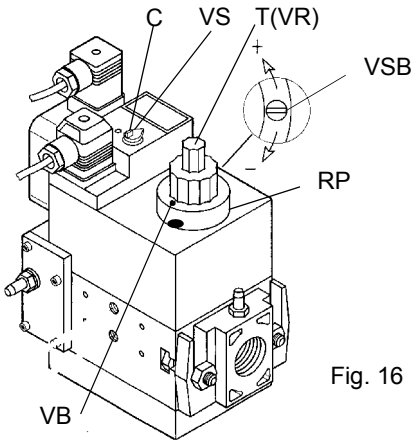

Fig. 16

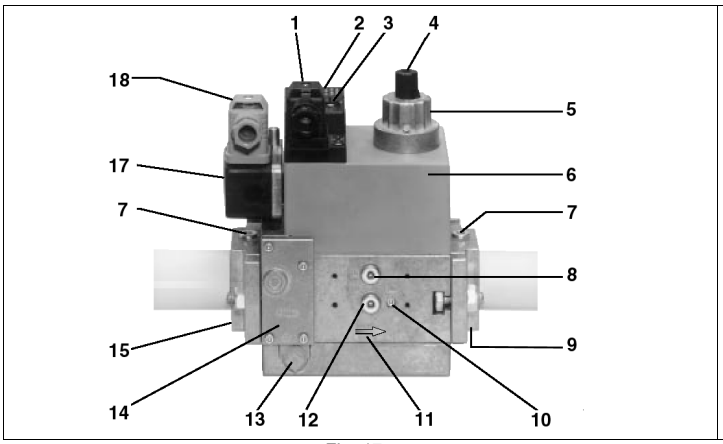

Fig. 17

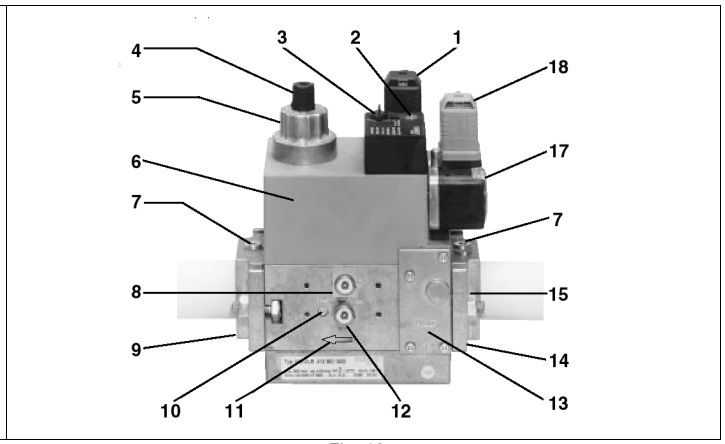

Fig. 18

**Key**

1 Electrical connection for valves
2 Operation display (optional)
3 Pressure governor closing tap
4 Start setting cap
5 Hydraulic brake and rate regulator
6 Coil
7 Test point connection G 1/8
8 Test point connection G 1/8 downstream of valve 1, on both sides
9 Output flange
10 Test point connection M4 downstream of valve 2
11 Gas flow direction
12 Test connection G 1/8 downstream of valve 1, on both sides
13 Vent nozzle pressure regulator
14 Filter (below cover)
15 Input flange
17 Pressure switch
18 Pressure switch electric connection

### *Gas valveversion with SKP2 (built-in pressure stabilizer)*

To increase or decrease gas pressure, and therefore gas flow rate, remove the cap **T** and use a screwdriver to adjust the regulating screw **VR**. Turn clockwise to increase the flow rate, counterclockwise to reduce it.

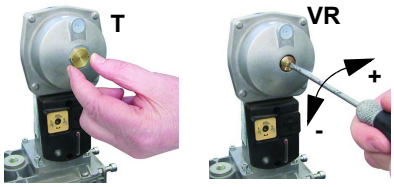

## MultiBloc MBE *Regulation VD-R whith PS*

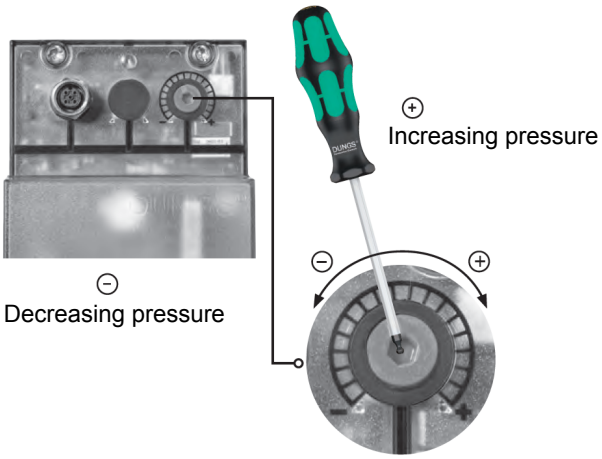


Fig. 19

***Setting scale is „Not“ linear! Various sensors available. Output pressure according to sensor‘s measuring range.***

***Adjust the outlet pressure to the value specified by the burner or equipment manufacturer!***

***While making outlet pressure adjustments, do not exceed a value that creates a hazardous condition to the burner!***

**ATTENTION:** To set the outlet pressure of the VD-R regulator, act on the adjustment ring nut (Fig. 10)
The position of the indicator in the dial indicates the value of the outlet pressure calculated as a percentage of the full scale of the PS sensor (Fig. 11)

| Outlet pressure | MIN | 10% | 25% | 50% | 75% | MAX |
|---|---|---|---|---|---|---|
| **PS-10/40** | 4 mbar<br>0,4 kPa<br>2 "w.c. | 10 mbar<br>1,0 kPa<br>4 "w.c. | 25 mbar<br>2,5 kPa<br>10 "w.c. | 50 mbar<br>5,0 kPa<br>20 "w.c. | 75 mbar<br>7,5 kPa<br>30 "w.c. | 100 mbar<br>10,0 kPa<br>40 "w.c. |
| **PS-50/200** | 20 mbar<br>2,0 kPa<br>8 "w.c. | 50 mbar<br>5,0 kPa<br>20 "w.c. | 125 mbar<br>12,5 kPa<br>50 "w.c. | 250 mbar<br>25,0 kPa<br>100 "w.c. | 375 mbar<br>37,5 kPa<br>150 "w.c. | 500 mbar<br>50,0 kPa<br>200 "w.c. |

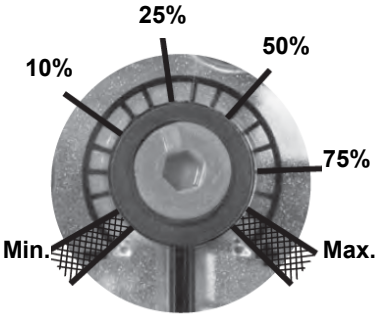


Fig. 20

Adjusting output pressure for positive pressure systems (requires PS-10/40 or PS-50/200):

## *Pressure taps* MultiBloc MBE

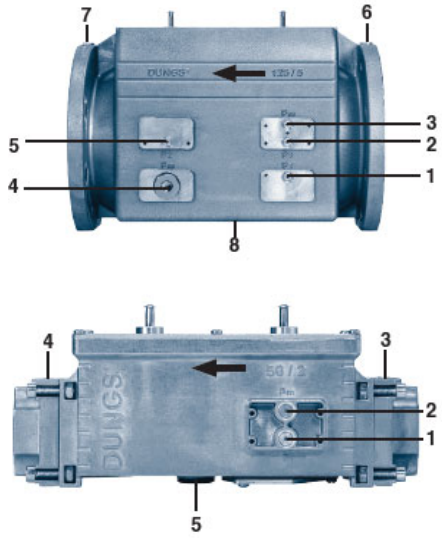


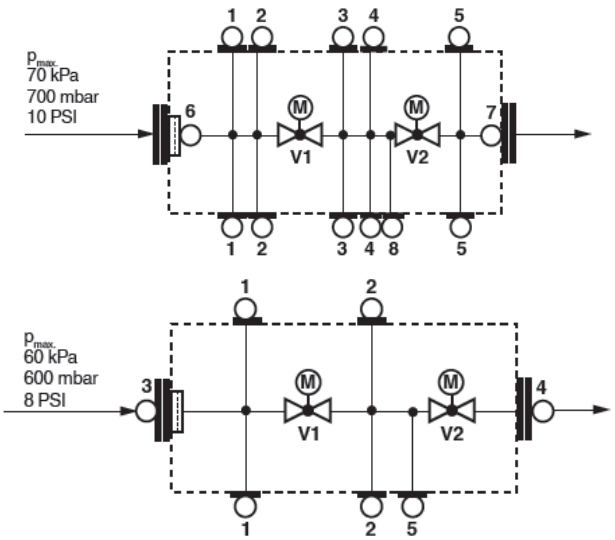


**1, 2, 3, 5**
Sealing plug

G ⅛ ISO 228

**4**
For system accessories

G ¾

Fig. 21

## Calibration air and gas pressure switches

The **air pressure switch** locks the control box if the air pressure is not the one requested. If it happens, unlock the burner by means of the control box unlock pushbutton, placed on the burner control panel.

The **gas pressure switches** check the pressure to avoid the burner operate when the pressure value is not in the requested pressure range.


## Calibration of PGMIN/LT gas pressure switch (proving system and minimum gas pressure)

As for the gas pressure switch calibration, proceed as follows:

- Be sure that the filter is clean.
- Remove the transparent plastic cap.
- While the burner is operating at the maximum output, test the gas pressure on the pressure port of the minimum gas pressure switch.
- Slowly close the manual cutoff valve (placed upstream the pressure switch, see gas train installation diagram), until the detected pressure is reduced by 50%. Pay attention that the CO value in the flue gas does not increase: if the CO values are higher than the limits laid down by law, slowly open the cutoff valve as to get values lower than these limits.
- Check that the burner is operating correctly.
- Clockwise turn the pressure switch adjusting ring nut (as to increase the pressure value) until the burner stops.
- Slowly fully open the manual cutoff valve.
- Refit the transparent plastic cover on the pressure switch.

## Calibration the maximum gas pressure switch (when provided)

To calibrate the maximum pressure switch, proceed as follows according to its mounting position:

- remove the pressure switch plastic cover;
- if the maximum pressure switch is mounted upstreaam the gas valves: measure the gas pressure in the network, when flame is off; by means of the adjusting ring nut **VR**, set the value read, increased by the 30%.
- if the maximum pressure switch is mounted downstream the “gas governor-gas valves” group and upstream the butterfly valve: light the burner, adjust it according to the procedure in the previous paragrph. Then, measure the gas pressure at the operating flow rate, downstream the “gas governor-gas valves” group and upstream the butterfly valve; by means of the adjusting ring nut **VR**, set the value read on step 2, increased by the 30%;
- replace the plastic cover.

## Calibration of air pressure switch

To calibrate the air pressure switch, proceed as follows:

- Remove the transparent plastic cap.
- Once air and fuel setting have been accomplished, startup the burner.
- During the pre-purge phase o the operation, turn slowly the adjusting ring nut **VR** in the clockwise direction (to increase the adjusting pressure) until the burner lockout, then read the value on the pressure switch scale and set it to a value reduced by 15%.
- Repeat the ignition cycle of the burner and check it runs properly.
- Refit the transparent plastic cover on the pressure switch.

## *Adjusting the combustion head*

***Attention! if it is necessary to change the head position, repeat the air and fuel adjustments described above.***

.The combustion head position affects the flame stability.The diffuser position must be set during the commissioning according to the regulation needs. The diffuser position is factory set as shown in figure ”A” (x = 10 mm). If different settings are required, it is possible to change the position: loosen the VB screw and slightly move the combustion head backwards, turning clockwise the knob VRT. Fasten VB screw when the adjustment is accomplished.

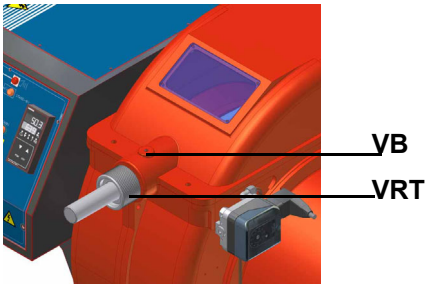


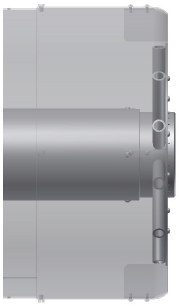

“all-ahead” position

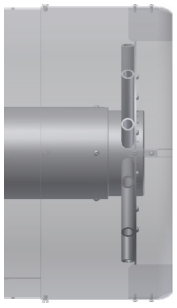

“all-backwards” head position

Depending on the boiler application, it is possible to act on the holes (figure B) to improve the flame stability and NOx, CO emission values. If necessary, close/open the holes in figure “B” using the screws kit given with the burner.

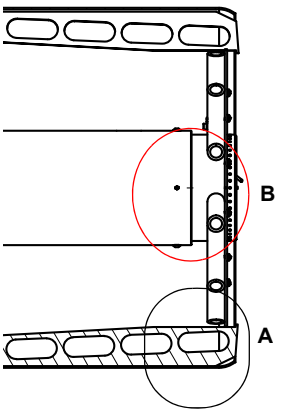


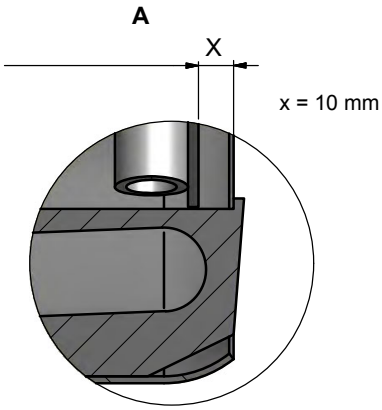


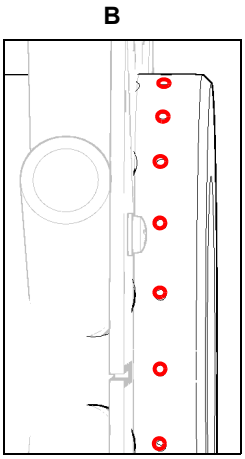


***CAUTION: perform these adjustments once the burner is turned off and cooled.***

## Adjustment procedure for light oil operation

The light oil flow rate can be adjusted choosing a by-pass nozzle that suits the boiler/utilisation output and setting the delivery and return pressure values according to the ones quoted on the below diagrams.

### FLUIDICS NOZZLE: REFERENCE DIAGRAM (INDICATIVE ONLY)

| DIMENSIONS | FLOW RATE kg/h | | Indicative pessure on return (bar) |
|---|---|---|---|
| | Min | Max | |
| 40 | 13 | 40 | 19 |
| 50 | 16 | 50 | 22 |
| 60 | 20 | 60 | 20 |
| 70 | 23 | 70 | 23 |
| 80 | 26 | 80 | 23 |
| 90 | 30 | 90 | 22 |
| 100 | 33 | 100 | 22 |
| 115 | 38 | 115 | 21 |
| 130 | 43 | 130 | 22 |
| 145 | 48 | 145 | 21 |
| 160 | 53 | 160 | 21 |
| 180 | 59 | 180 | 22 |
| 200 | 66 | 200 | 21 |
| 225 | 74 | 225 | 22 |
| 250 | 82 | 250 | 22 |
| 275 | 91 | 275 | 22 |
| 300 | 99 | 300 | 23 |
| 330 | 109 | 330 | 23 |
| 360 | 119 | 360 | 22 |
| 400 | 132 | 400 | 22 |
| 450 | 148 | 450 | 22 |
| 500 | 165 | 500 | 22 |
| 550 | 181 | 550 | 22 |
| 600 | 198 | 600 | 23 |
| 650 | 214 | 650 | 23 |
| 700 | 231 | 700 | 23 |
| 750 | 250 | 750 | 23 |
| 800 | 267 | 800 | 22 |

Tab. 1

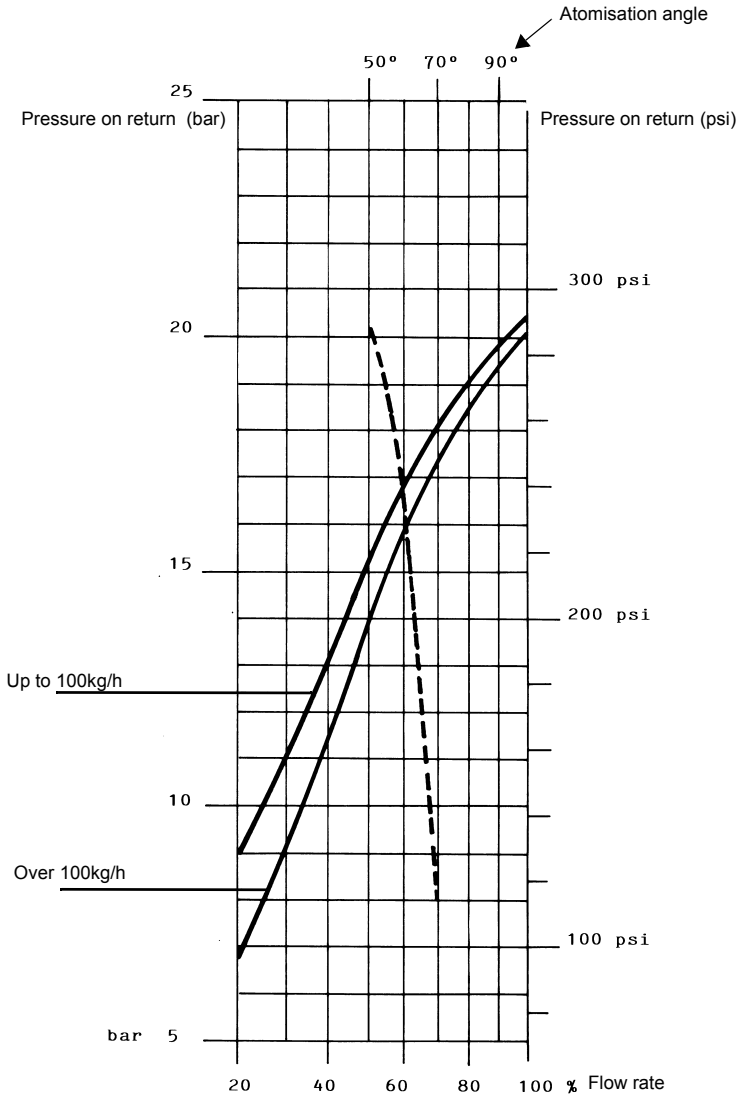


**NOZZLE SUPPLY PRESSURE = 25 bar**

- - - - - Atomisation angle according to the return pressure

——— % Flow rate

viscosity at nozzle = 5 cSt

***ATTENTION! To achieve the maximum flow rate close completely the return line.***

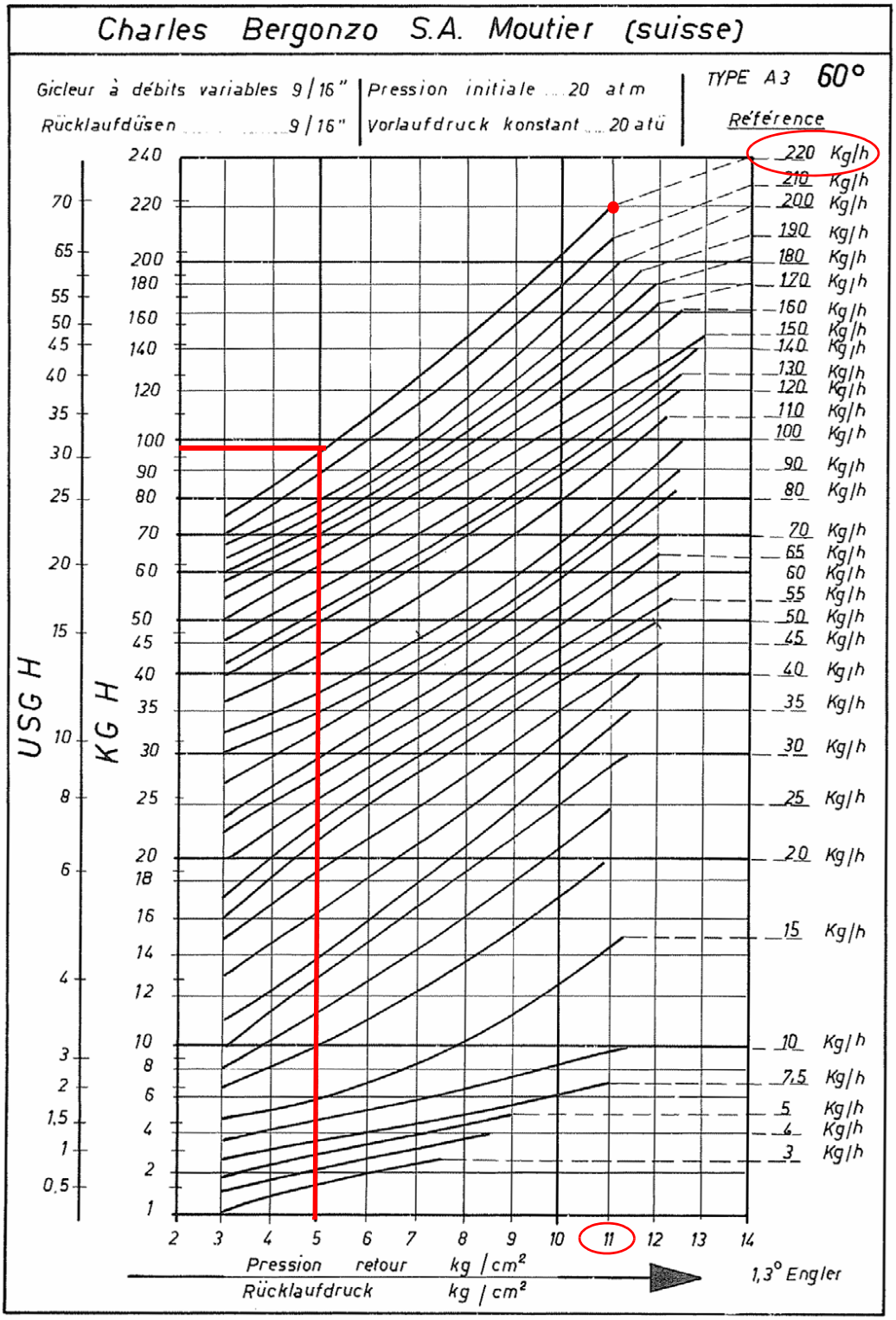


**NOZZLE SUPPLY PRESSURE = 20 bar**

**Example (Bergonzo):** if a 220kg/h flow rate BERGONZO nozzle is provided, set the return pressure at 11bar, supply at 20bar on the delivery to get a 220kg/h flow rate. If the return pressure needed is 5bar, instead, act on the **V** adjusting screw on the pressure governor. The flow rate will then be about 95kg/h (see the example showed on the Bergonzo diagram).

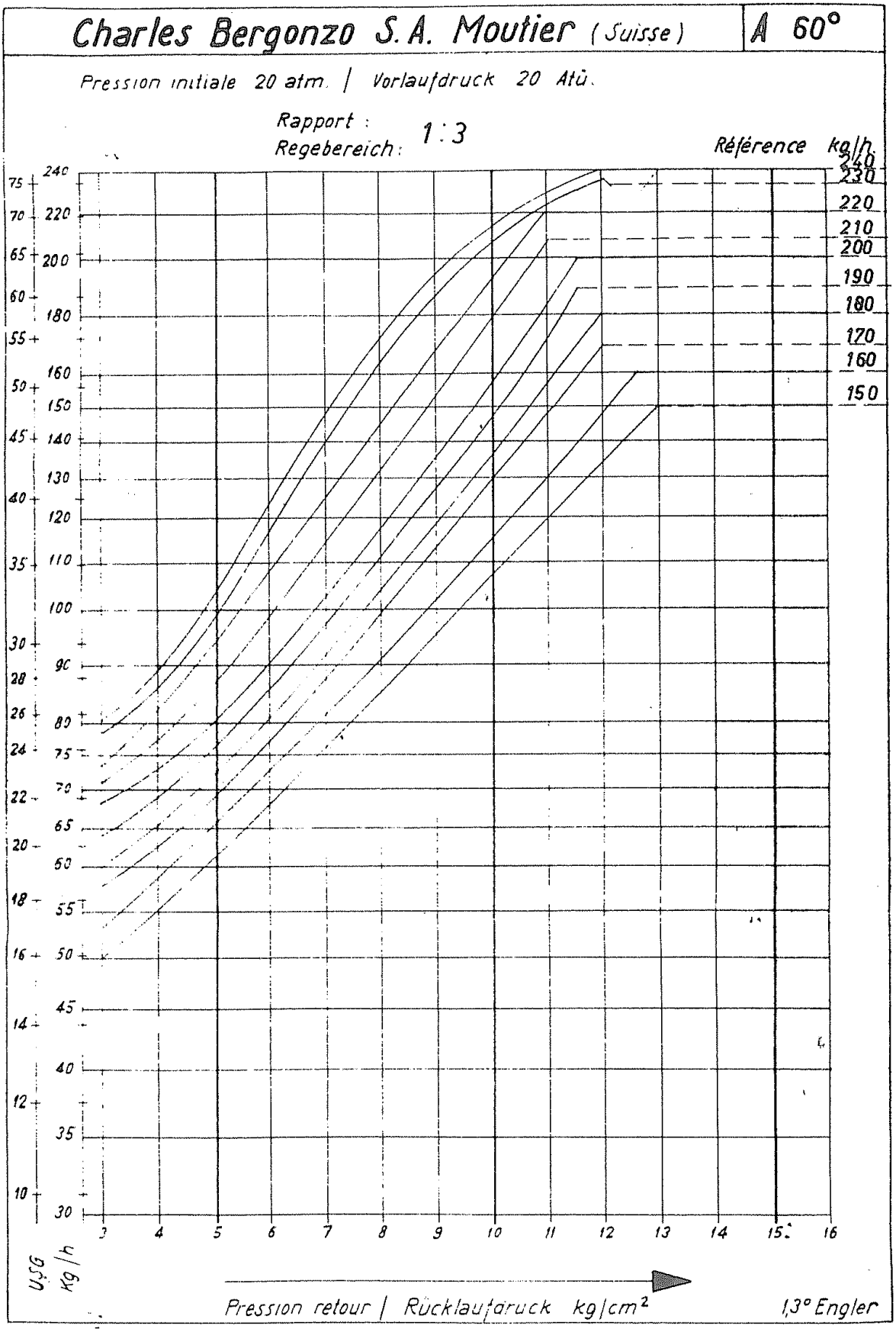
Charles Bergonzo S.A. Moutier (Suisse)
A 60°
Pression initiale 20 atm. / Vorlaufdruck 20 Atü.
Rapport : 1:3
Regebereich :
Référence kg/h
240
230
220
210
200
190
180
170
160
150
USG
kg/h
Pression retour / Rücklaufdruck kg/cm²
1,3° Engler

Fig. 22

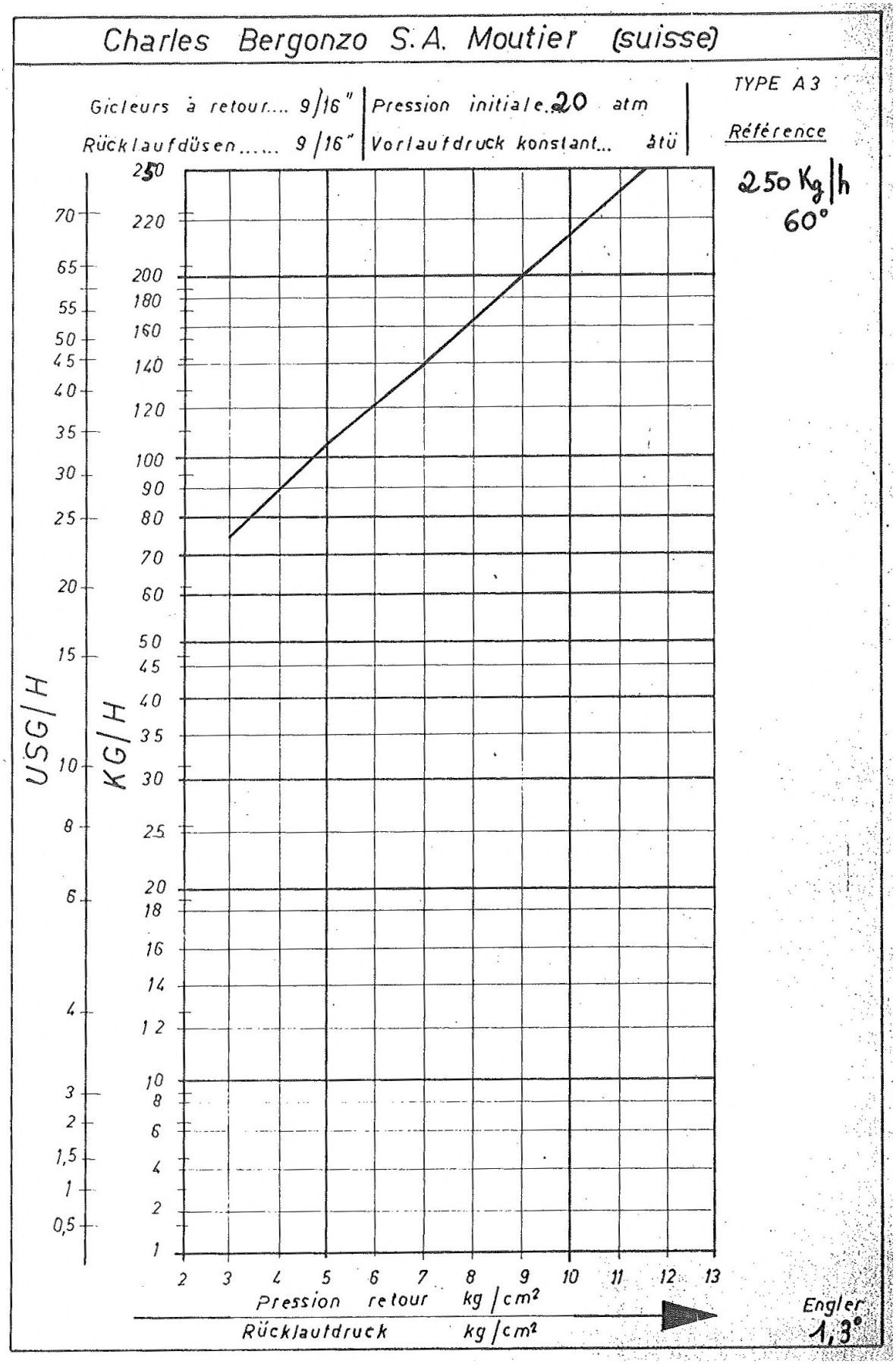
Charles Bergonzo S.A. Moutier (suisse)
Gicleurs à retour.... 9/16"
Rücklaufdüsen..... 9/16"
Pression initiale 20 atm
Vorlaufdruck konstant... atü
TYPE A3
Référence
250 Kg/h
60°
USG/H
KG/H
Pression retour kg/cm²
Rücklaufdruck kg/cm²
Engler
1,3°

## *FLUIDICS KW3...60°*

**NOZZLE SUPPLY PRESSURE = 20 bar. VISCOSITY AT NOZZLE = 5 cSt**

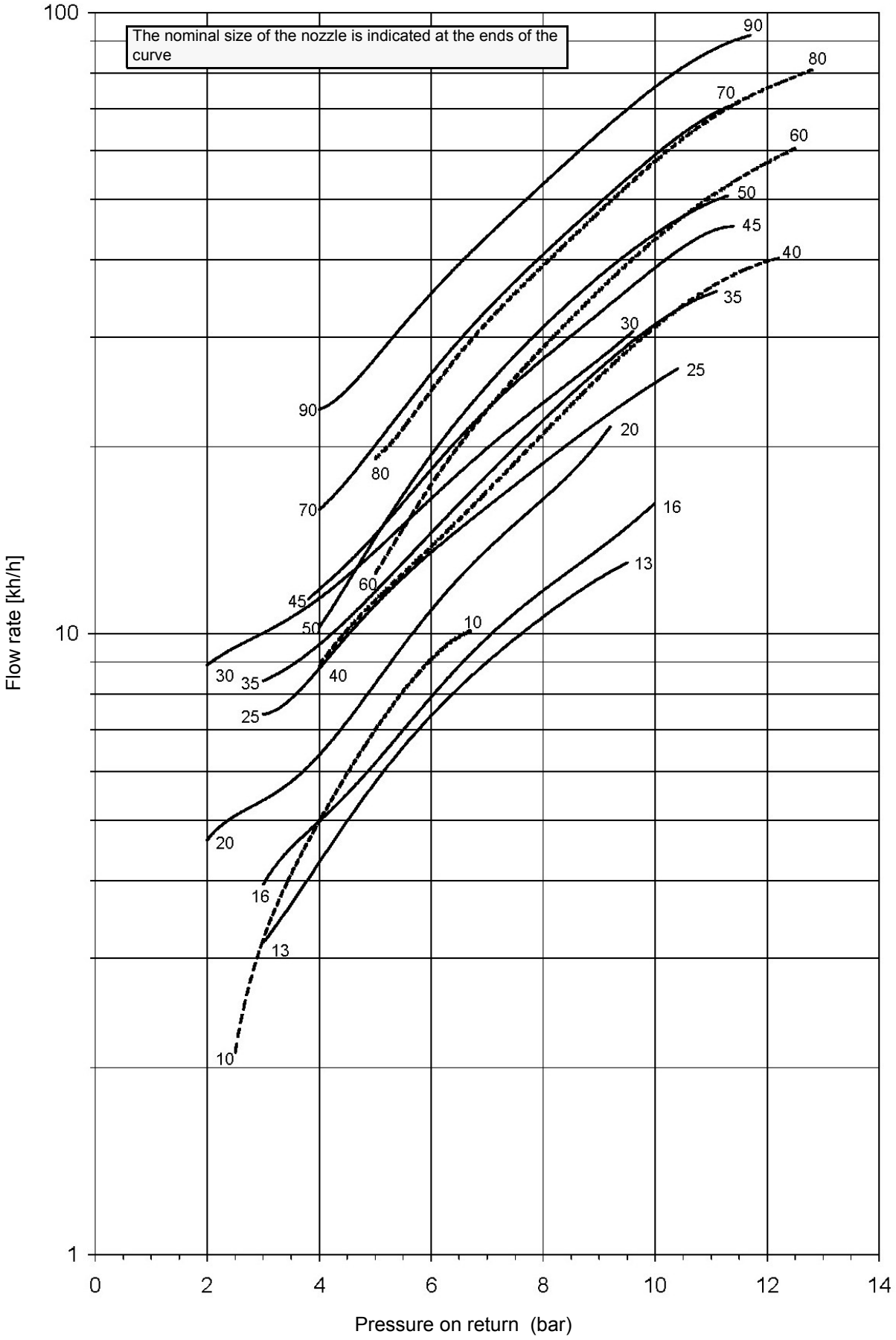

## *FLUIDICS KW3...60°*

**NOZZLE SUPPLY PRESSURE = 20 bar. VISCOSITY AT NOZZLE = 5 cSt**

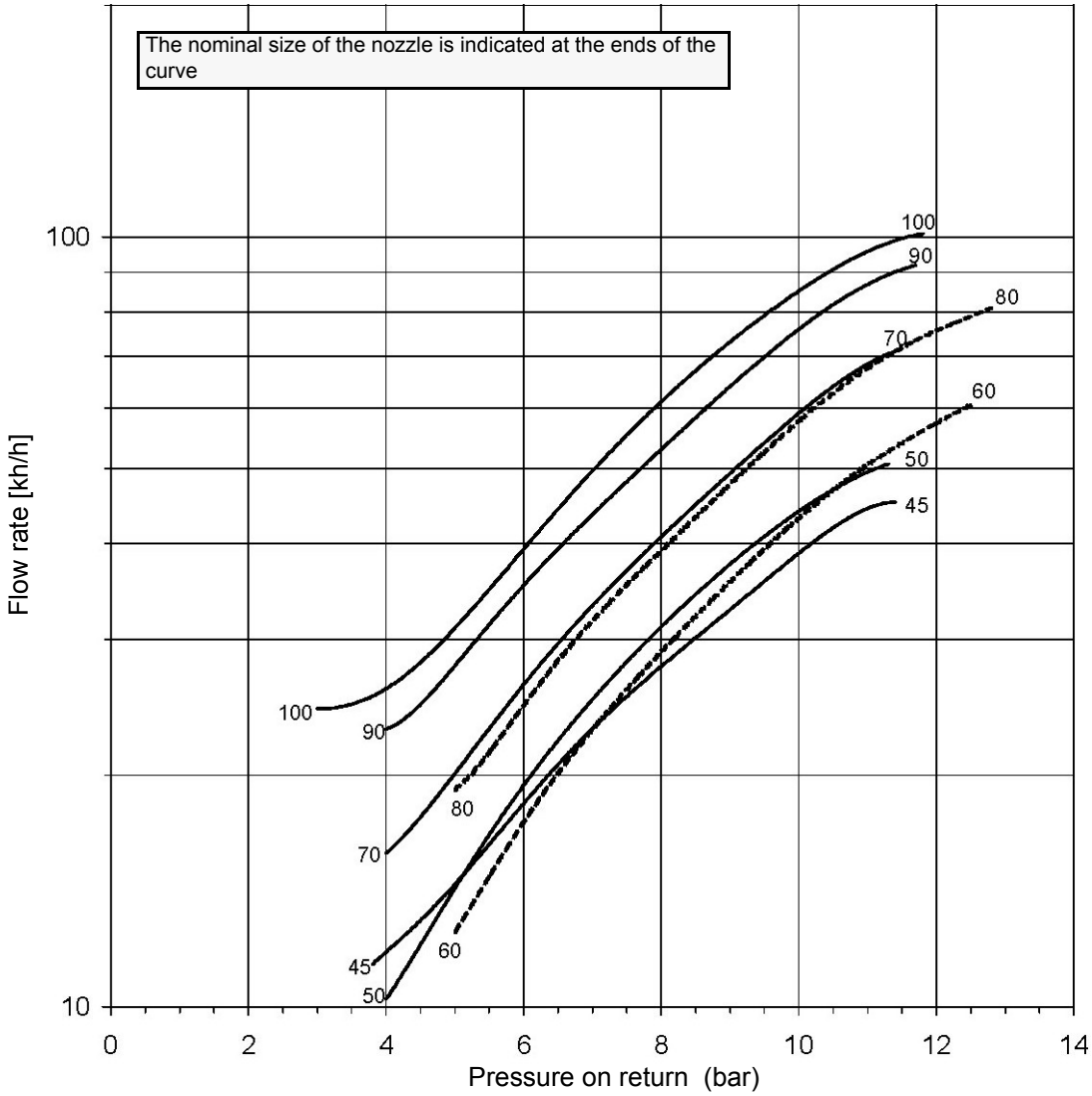


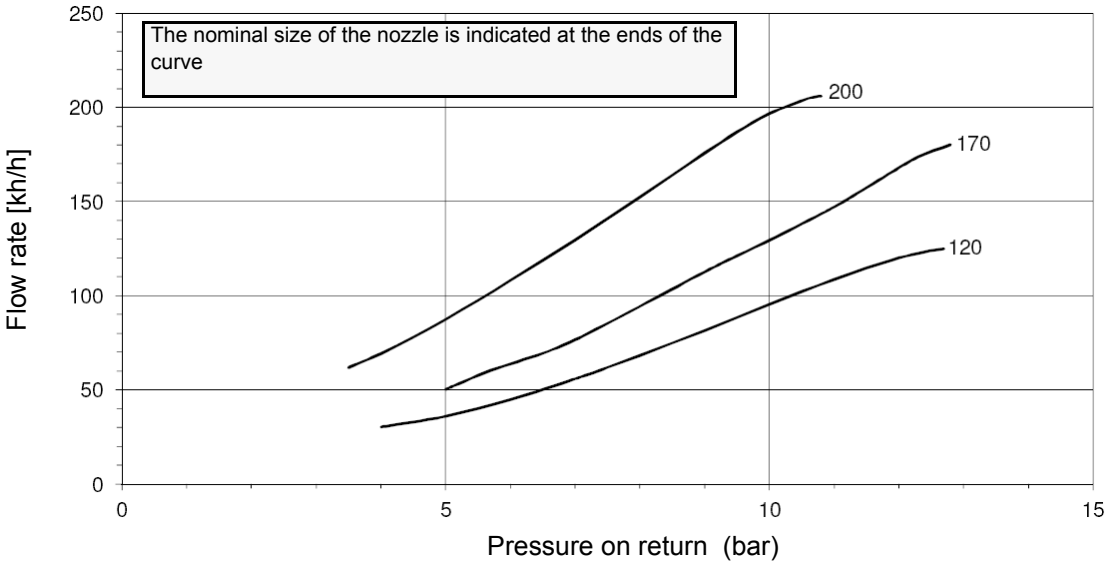

## *FLUIDICS KW3...60°*

**NOZZLE SUPPLY PRESSURE = 20 bar. VISCOSITY AT NOZZLE = 5 cSt**

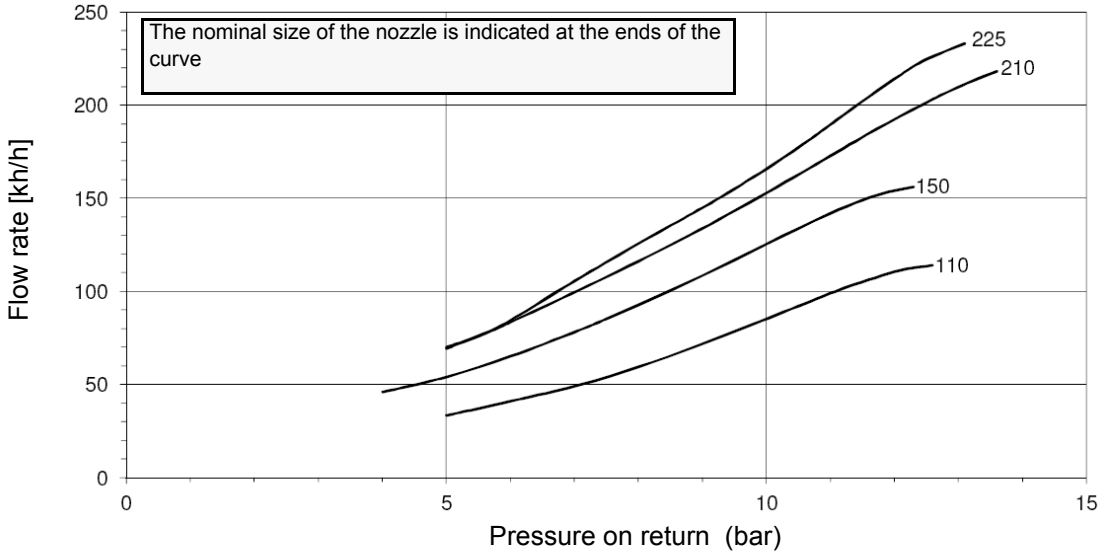


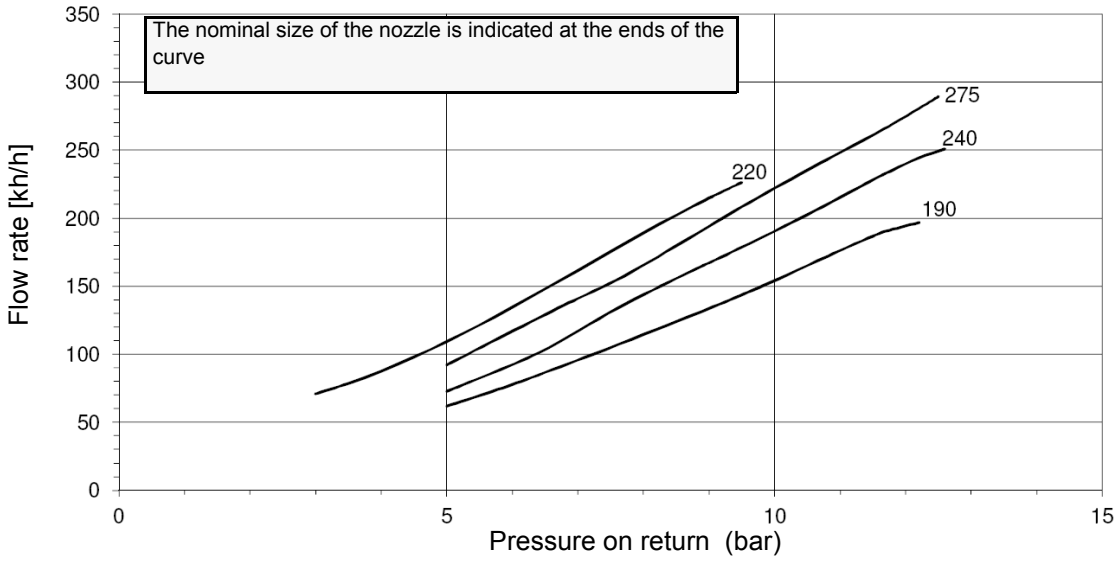


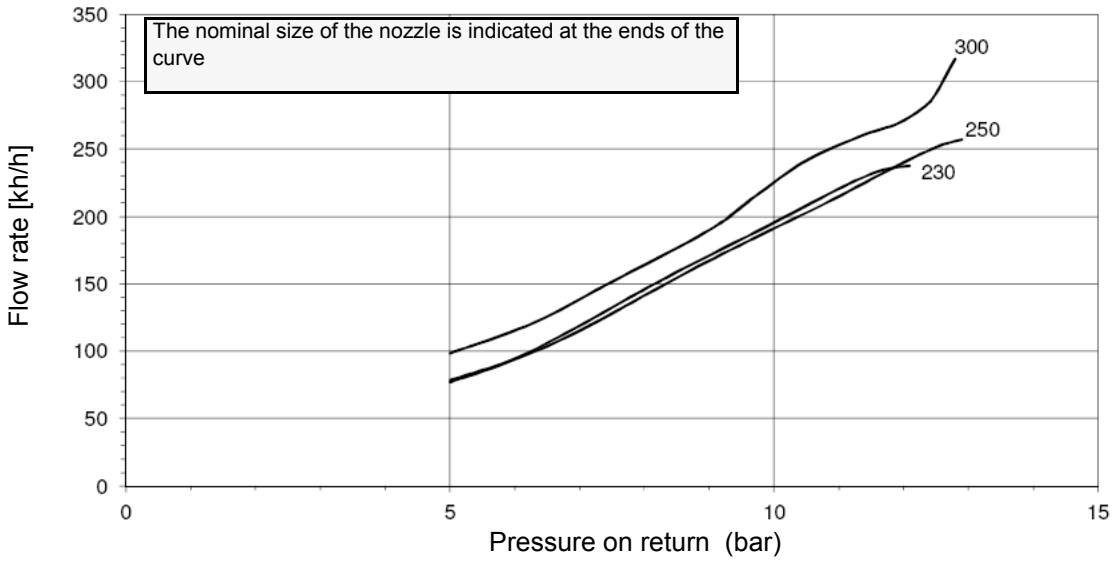

## *Oil Flow Rate Settings*

1 Once the air and gas flow rates are adjusted, turn the burner off, switch to the oil operation (OIL, on the burner control panel).

2 with the electrical panel open, prime the oil pump acting directly on the related **CP** contactor (see next picture): check the pump motor rotation and keep pressing for some seconds until the oil circuit is charged;


3 bleed the air from the **M** pressure gauge port (Fig. 23) by loosing the cap without removing it, then release the contactor.

| Suntec T.. | Suntec TA. | HP Technik UHE |
|---|---|---|
| 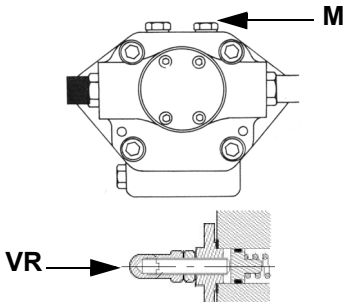  | 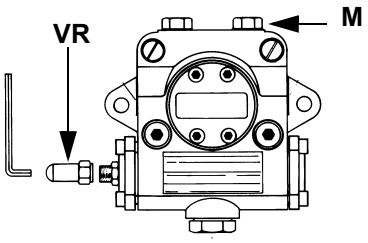  | 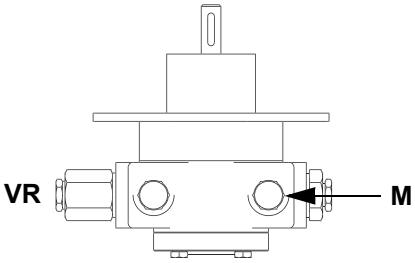  |

Fig. 23

4 As for setting the fuel/air ratio curve, see the LMV related manual.

5 Only if necessary, adjust the supply pressure as follows (see related paragraph); insert a pressure gauge into the port shown on Fig. 24 and act on on the pump adjusting screw **VR** (see Fig. 23) as to get the nozzle pressure at 20bar (Monarch or Fluidics nozzles - see page 42-38).

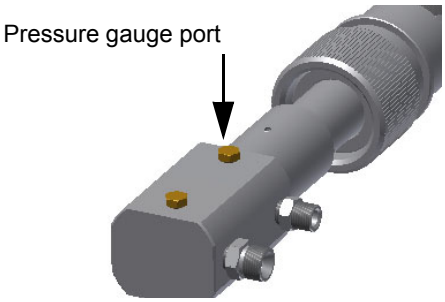


Fig. 24

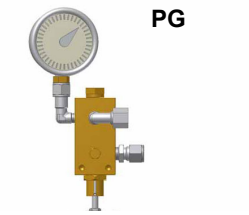


Fig. 25

6 In order to get the maximum oil flow rate, adjust the pressure (reading its value on the **PG** pressure gauge) without changing the air flow rate set during the gas operation adjustments (see previous paragraph), checking always the combustion parameters.

Turn the burner off; then start it up again. If the adjustment is not correct, repeat the previous steps.

## *Minimum oil pressure switch (when provided)*

The minimum oil pressure switch on the inlet line, checks that the pressure does not drop below a default value. The pressure switch must be set, say, at 10% under the pressure at the nozzle.

## *Maximum oil pressure switch*

The oil pressure switch on the return line, checks that the pressure does not exceed a default value. This value must not be higher than the maximum acceptable pressure on the return line (this value is reported on the specification table). A pressure change on the return line could affect the combustion parameters: for this reason, the pressure switch must be set, say, at 20% over the pressure recorded during the combustion adjustment. The factory setting is 4 bar.

It is recommended to verify that the combustion parameters are within the range of acceptable values even against a pressure variation that gets close to the limit of the pressure switch.

This check should be carried out along the whole range of the burner output.

In case of inacceptable values, reduce from 20% to 15% the overpressure; later on, repeat the adjustments described above.

## *Oil pressure switch adjustment*

Follow the below instruction, according to the pressure switch installed.

**Trafag Picostat 9B4..**

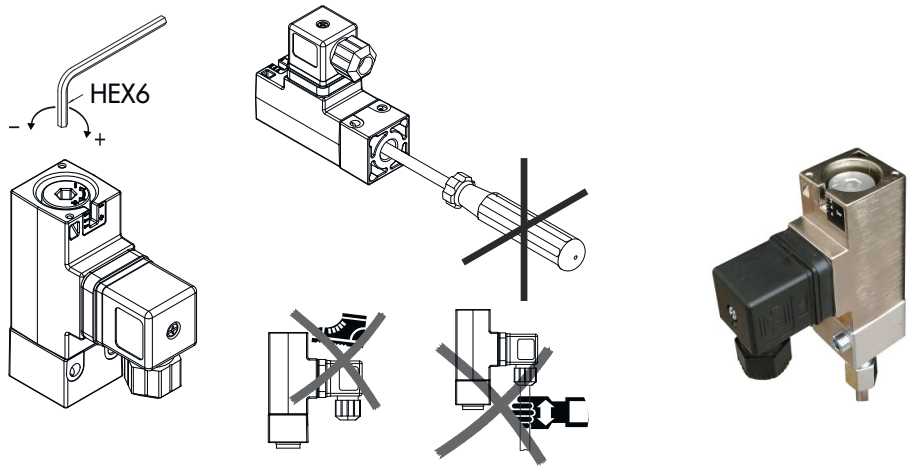

# PART IV: MAINTENANCE

***WARNING: ALL OPERATIONS ON THE BURNER MUST BE CARRIED OUT WITH THE MAINS DISCONNECTED AND THE FUEL MANAUL CUTOFF VALVES CLOSED!***
***ATTENTION: READ CAREFULLY THE "WARNINGS" CHAPTER AT THE BEGINNIG OF THIS MANUAL.***

At least once a year carry out the maintenance operations listed below. In the case of seasonal servicing, it is recommended to carry out the maintenance at the end of each heating season; in the case of continuous operation the maintenance is carried out every 6 months.

## *ROUTINE MAINTENANCE*

- Check and clean the cartdrige of the fuel filter, replace it if necessary;
- carefully check the fuel flexible hoses for leaks;
- check and clean the filter on the fuel pump: filter must be thoroughly cleaned at least once in a season to ensure correct working of the fuel unit. To remove the filter, unscrew the four screws on the cover. When reassemble, make sure that the filter is mounted with the feet toward the pump body. If the gasket between cover and pump housing should be damaged, it must be replaced;
- remove, check and clean the combustion head;
- check the ignition electrodes and their ceramic insulators, clean, adjust and replace if necessary;
- remove and clean the oil nozzles (IMPORTANT: do not clean the nozzles using metallic or sharp utensils, use only solvents or steam); at the end of maintenance operations, refit the burner, turn it on and check the combustion. If in doubt, replace the defective nozzle/s. In case of intensive use of the burner, the nozzles must be replaced at the end of the working season;
- examine and clean the detection electrode/photoelement (according to the burner models), replace it if necessary, in case of doubt, check the detection circuit, after the burner start-up;
- clean and grease levers and rotating parts.

## *Gas filter maintenance*

To clean or remove the filter, proceed as follows:

1. remove the cap unscrewing the fixing screws (A);
2. remove the filtering cartridge (B), clean it using water and soap, blow it with compressed air(or replace it, if necessary)
3. replace the cartridge in its proper position taking care to place it inbetween the guides as not to hamper the cap replacement;
4. be sure to replace the "O" ring into its place (C) and replace the cover fastening by the proper screws (A).

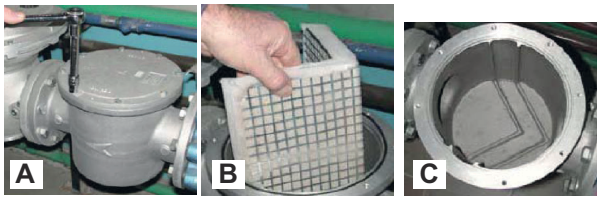


***WARNING: Before opening the filter, close the manual cutoff valve downstream the filter and bleed the gas; check that inside the filter there is no pressurised gas.***

## *Adjusting the gas valves group and removing the filter*

### *MULTIBLOC DUNGS MB-DLE 405..412*

- Check the filter at least once a year!
- Change the filter if the pressure difference between pressure connection 1 and 3 (Fig. 1-Fig. 3)is $\Delta p > 10$ mbar.
- Change the filter if the pressure difference between pressure connection 1 and 3 (Fig. 1-Fig. 3) is twice as high compared to the last check.

You can change the filter without removing the fitting.

1 Interrupt the gas supply closing the on-off valve.
2 Remove screws 1 ÷ 4 using the Allen key n. 3 and remove filter cover 5 in Fig. 5.
3 Remove the filter 6 and replace with a new one.
4 Replace filter cover 5 and tighten screws 1 ÷ 4 without using any force and fasten.
5 Perform leakage and functional test, $p_{max.}$ = 360 mbar.
6 Pay attention that dirt does not fall inside the valve.

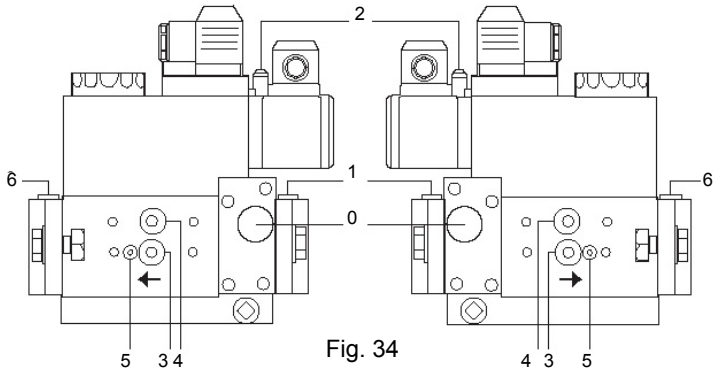

Fig. 34

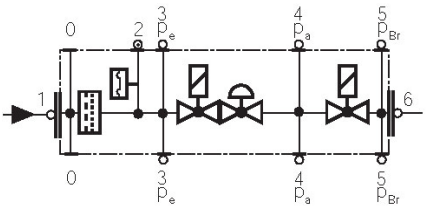

Fig. 35

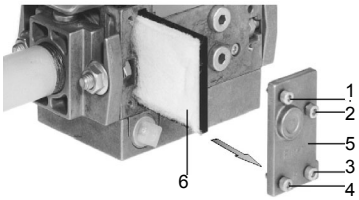

Fig. 36

### *DUNGS MB-DLE 415 - 420 B01 1” 1/2 - 2”*

- Check the filter at least once a year!
- Change the filter if the pressure difference between pressure connection 1 and 2 (Fig. 1-Fig. 2) $\Delta p > 10$ mbar.
- Change the filter if the pressure difference between pressure connection 1 and 2 (Fig. 1-Fig. 2) is twice as high compared to the last check.

You can change the filter without removing the fitting.

1 Interrupt the gas supply closing the on-off valve.
2 Remove screws 1 ÷ 6 (Fig. 3).
3 Change filter insert.
4 Re-insert filter housing, screw in screws 1 ÷ 6 without using any force and fasten.
5 Perform leakage and functional test, $p_{max.}$ = 360 mbar.
6 Pay attention that dirt does not fall inside the valve.

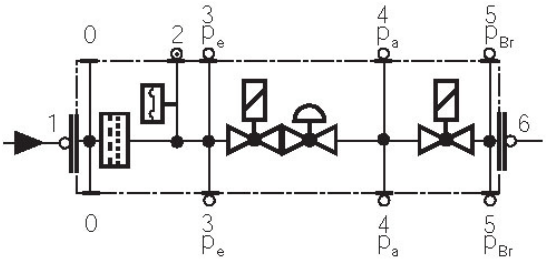

Fig. 38

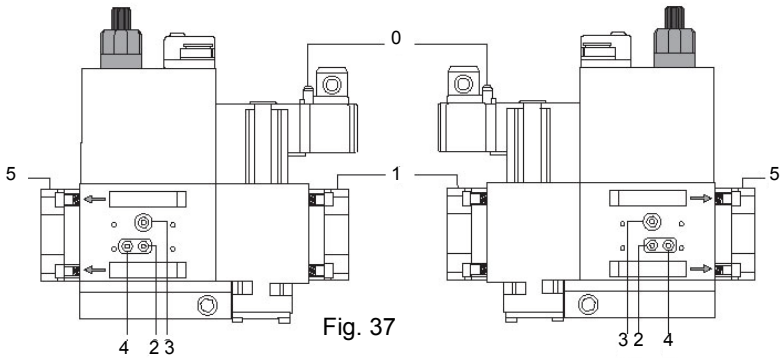

Fig. 37

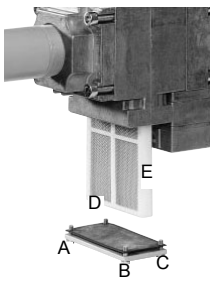

Fig. 39

## MultiBloc MBE*MultiBloc VD Mounting*

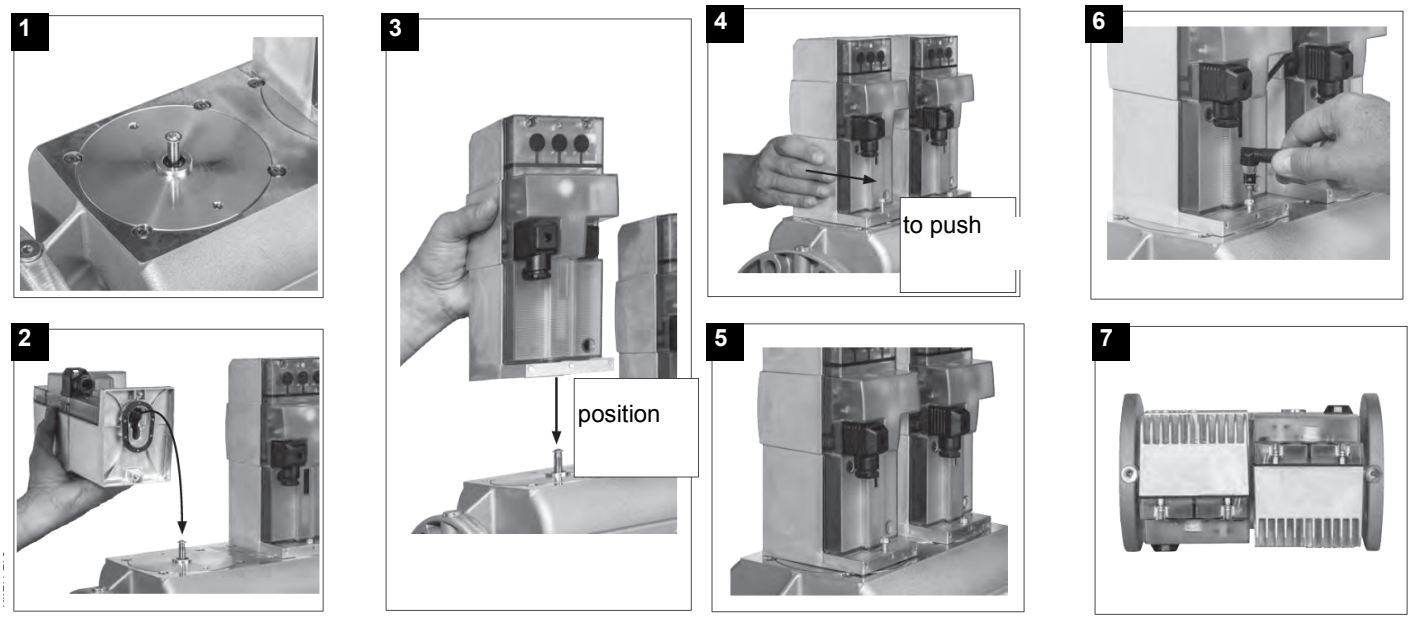


1. Position VD on VB, fig. 2+3.
2. Slide VD forward up to the stop, fig. 4.
3. Screw VD on with 2 M5 screws for each, max. 5 Nm/44 in.-lb., fig. 5/6.
4. VD can be mounted rotated by 180°, fig. 7.

### *Light oil filter maintenance*

For correct and proper servicing, proceed as follows:

1 cutoff the required pipe section;
2 unscrew the filter cup;
3 remove the filtering cartridge, wash it with gasoline;if necessary, replace it;check the tightening O-rings and replace them if necessary;
4 replace the cup and restore the pipe line.

### *Removing the combustion head*

1 Remove the top **H**.
2 Remove the **UV** detector out of its housing: disconnect electrode cables and the light oil flexible hoses.
3 Loosen the screws **V** holding the gas manifold **G**, loosen the connectors **E**.
4 Some models are provided with the **T** baffle. Move the gas manifold ahead and remove the baffle.
5 Pull out the complete group as shown in the picture below.
6 Clean the combustion head by means of a vacuum cleaner; scrape off the scale by means of a metallic brush.

**Note:** to replace the combustion head, reverse the operations described above.

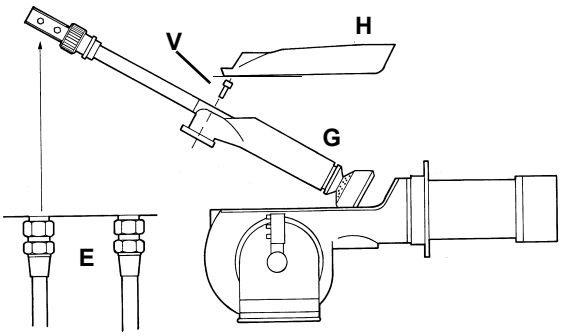


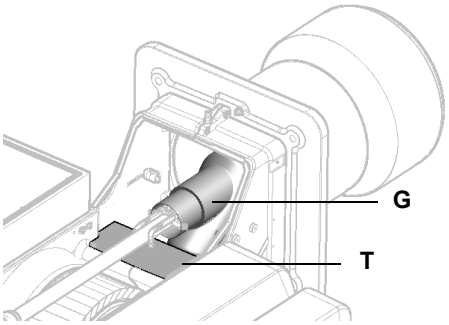

## Cleaning/replacing the electrodes

**ATTENTION: avoid the electrodes to get in touch with metallic parts (blast tube, head, etc.), otherwise the boiler operation would be compromised. Check the electrodes position after any intervention on the combustion head.**

To remove the oil gun, proceed as follows:

1 remove the combustion head as described on the prevoius paragraph;
2 loosen the **VL** screw and remove the oil gun and the electrodes: check the oil gun, replace it if necessary;
3 after removing the oil gun, unscrew the nozzle and replace it if necessary;
4 in order to replace the electrodes, unscrew the **VE** fixing screws and remove them: place the new electrodes being careful to observe the measures showed on pag.: reassemlbe following the reversed procedure.

**Caution**: adjust the nozzle position according to the air pipe, by means of the **VU** screw, ance the **VL** screw is fastened.

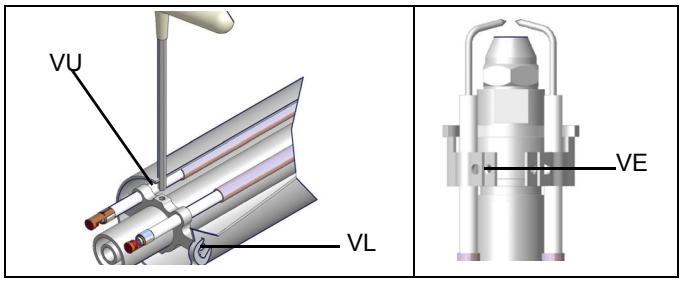


## Electrodes Adjustment

Important Note: Check the ignition and detection electrodes after removing/adjusting the combustion head.

***ATTENTION: avoid the ignition and detection electrodes to contact metallic parts (blast tube, head, etc.), otherwise the boiler's operation would be compromised. Check the electrodes position after any intervention on the combustion head.***

Adjust the electrodes position, according to the quotes shown othe next picture

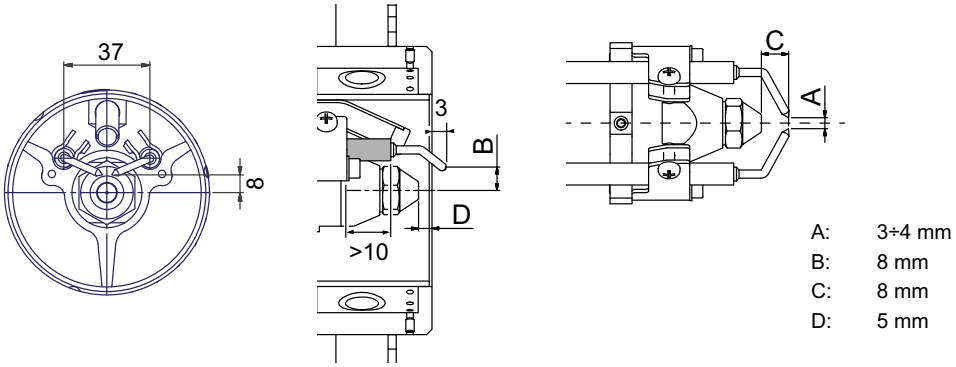


## Checking the detection current

To check the detection signal follow the scheme in the picture below. If the signal is less than the value indicated, check the position of the detection electrode or detector, the electrical contacts and, if necessary, replace the electrode or the detector.

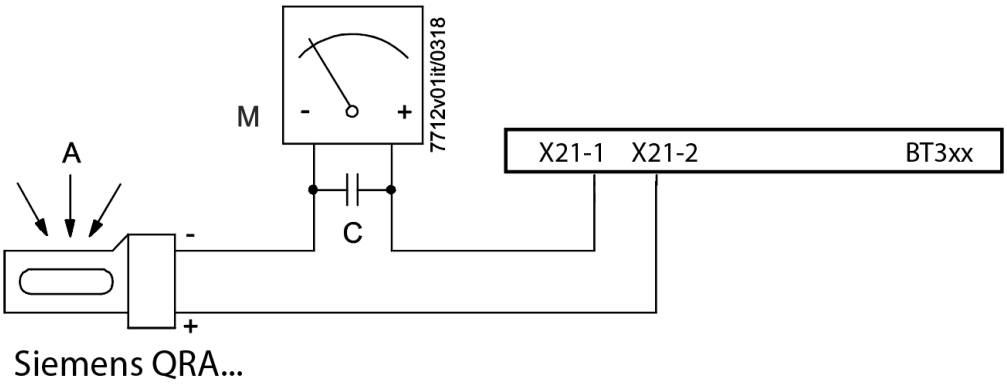

### *Flame detection probe*

To clean/replace the detection photocell, proceed as follows:

1 Disconnect the system from the electrical power supply.
2 Shut off the fuel supply;
3 remove the photocell from its slot (see next figure);
4 clean the bulbe if dirty, taking care not to touch it with bare hands;
5 if necessary, replace the bulb;

replace the photocell into its slot.

### *Burner service term*

- In optimal operating conditions, and with preventive maintenance, the burner can last up to 20 years.
- Upon expiry of the burner service term, it is necessary to carry out a technical diagnosis and, if necessary, an overall repair.
- The burner status is considered to be at its limit if it is technically impossible to continue using it due to non-compliance with safety requirements or a decrease in performance.
- The owner makes the decision whether to finish using the burner, or replacing and disposing of it based on the actual state of the appliance and any repair costs.
- The use of the burner for other purposes after the expiry of the terms of use is strictly prohibited.

### *Seasonal stop*

To stop the burner in the seasonal stop, proceed as follows:

1 turn the burner main switch to 0 (Off position)
2 disconnect the power mains
3 close the fuel valve of the supply line

### *Burner disposal*

In case of disposal, follow the instructions according to the laws in force in your country about the “Disposal of materials”.

## *WIRING DIAGRAMS*

Refer to the attached wiring diagrams.

**WARNING**

1 - Electrical supply 230V / 400V 50Hz 3N a.c.
2 - Do not reverse phase with neutral
3 - Ensure burner is properly earthed
4 - Refer to the attached document “RECOMMENDATIONS FOR LMV5x CONNECTIONS”

## TROUBLESHOOTNG GUIDE Gas operation

| | | |
|---|---|---|
| **BURNER DOESN'T LIGHT** | * No electric power supply | * Restore power supply |
| | * Main switch open | * Close switch |
| | * Thermostats open | * Check set points and thermostat connections |
| | * Bad thermostat set point or broken thermostat | * Reset or replace the thermostat |
| | * No gas pressure | * Restore gas pressure |
| | * Safety devices (manually operated safety thermostat, pressure switches and so on) open | * Restore safety devices; wait till boiler reaches operating temperature then check safety device functionality. |
| | * Broken fuses | * Replace fuses. Check current absorption |
| | * Fan thermal contacts open (three phases motors only) | * Reset contacts and check current absorption |
| | * Burner control lock out | * Reset and check its functionality |
| | * Burner control damaged | * Replace burner control |
| **GAS LEAKAGE: BURNER LOCKS OUT (NO FLAME)** | * Gas flow is too low | * Increase the gas flow<br>* Check gas filter cleanness<br>* Check butterfly valve opening when burner is starting (only Hi-Low flame and progressive) |
| | * Ignition electrodes discharge to ground because dirty or broken | * Clean or replace electrodes |
| | * Bad electrodes setting | * Check electrodes position referring to instruction manual |
| | * Electrical ignition cables damaged | * Replace cables |
| | * Bad position of cables in the ignition transformer or into the electrodes | * Improve the installation |
| | * Ignition transformer damaged | * Replace the transformer |
| **BURNER LOCKS OUT WITH FLAME PRESENCE** | * Bad flame detector set | |
| | * Flame detector damaged | * Replace or adjust flame detector |
| | * Bad cables of flame detector | * Check cables |
| | * Burner control damaged | * Replace burner control |
| | * Phase and neutral inverted | * Adjust connections |
| | * Ground missing or damaged | * Check ground continuity |
| | * Voltage on neutral | * Take off tension on neutral |
| | * Too small flame (due to not much gas) | * Adjust gas flow<br>* Check gas filter cleanness |
| | * Too much combustion air | * Adjust air flow rate |
| **only FOR LME22: BURNER CONTINUES TO PERFORM ALL ITS FEATURES WITHOUT IGNITING THE BURNER** | * Air pressure switch damaged or bad links | * Check air pressure switch functions and links |
| | * Burner control damaged | * Replace burner control |
| **BURNER LOCKS OUT WITHOUT ANY GAS FLOW** | * Gas valves don't open | * Check voltage on valves; if necessary replace valve or the burner control<br>* Check if the gas pressure is so high that the valve cannot open |
| | * Gas valves completely closed | * Open valves |
| | * Pressure governor too closed | * Adjust the pressure governor |
| | * Butterfly valve closed | * Open the butterfly valve |
| | * Maximum pressure switch open. | * Check connection and functionality |
| | * Air pressure switch doesn't close the NO contact | * Check connections<br>* Check pressure switch functionality |
| **THE BURNER IS BLOCKED AND THE EQUIPMENT PROVIDES A LOCK CODE "CAUSE AIR PRESSURE SWITCH FAULT"** | * Air pressure switch damaged (it keeps the stand-by position or badly set) | * Check air pressure switch functionality<br>* Reset air pressure switch |
| | * Air pressure switch connections wrong | * Check connections |
| | * Air fan damaged | * Replace motor |
| | * No power supply | * Reset power supply |
| | * Air damper too closed | * Adjust air damper position |
| **BURNER LOCKS OUT DURING NORMAL RUNNING** | * Flame detector circuit interrupted | * Check wiring<br>* Check photocell |
| | * Burner control damaged | * Replace burner control |
| | * Maximum gas pressure switch damaged or badly set | * Reset pressure switch or replace it |
| **THE BURNER STARTS AND AFTER A WHILE IT REPEATS THE STARTING CYCLE.** | * Gas pressure switch badly set | * Reset the pressure switch |
| | * Gas filter dirty | * Clean gas filter |
| | * Gas governor too low or damaged | * Reset or replace the governor |
| **BURNER STANDS WHILE RUNNING WITHOUT ANY SWITCHING OF THERMOSTATS** | * Thermal contacts of fan motor open | * Reset contacts and check values<br>* Check current absorption |
| **FAN MOTOR DOESN'T START** | * Internal motor wiring broken | * Replace wiring or complete motor |
| | * Fan motor starter broken | * Replace starter |
| | * Fuses broken (three phases only) | * Replace fuses and check current absorption |
| **BURNER DOESN'T SWITCH TO HIGH FLAME** | * Hi-low flame thermostat badly set or damaged | * Reset or replace thermostat |
| | * Servomotor cam badly set | * Reset servomotor cam |
| ***mechanical only*: SOMETIMES THE SERVOMOTOR RUNS IN THE WRONG WAY** | * Servomotor capacitor damaged | * Replace capacitor |

## TROUBLESHOOTNG GUIDE - Light oil operation

| | | |
|---|---|---|
| **BURNER DOESN'T LIGHT** | * No electric power supply | * Wait for electric power supply is back |
| | * Main switch open | * Close the switch |
| | * Thermostats open | * Check set points and thermostat connections |
| | * Bad thermostat set point or broken thermostat | * Set or replace the thermostat |
| | * No gas pressure | * Restore gas pressure |
| | * Safety devices (manually operated safety thermostat or pressure switch, and so on ...) open | * Restore safety devices; wait that boiler reaches its temperature then check safety device functionality. |
| | * Broken fuses | * Replace fuses. Check current absorption |
| | * Fan thermal contacts open (only three phases) | * Reset contacts and check current absorption |
| | * Burner control locked out | * Reset and check its functionality |
| | * Burner control damaged | * Replace burner control |
| **BURNER LOCKS OUT WITH FLAME PRESENCE** | * Flame detector dirty or damaged | * Clean or replace flame detector |
| | * Burner control damaged | * Replace burner control |
| | * Smoking flame | * Reset combustion air flow rate<br>* Check the nozzle and, if necessary, replace it<br>* Check cleanness of combustion head<br>* Check chimney suction<br>* Check boiler cleanness |
| | * Combustion head dirty | * Clean combustion head |
| **BURNER LOCKS OUT WITHOUT ANY FUEL FLOW RATE** | * No fuel | * Fill the tank |
| | * Pump joint broken | * Check pump pressure |
| | * Pump damaged | * Check pump suction |
| | | * Replace pump |
| | * Compressed air (or steam) too high | * Released compressed air (or steam) pressure |
| | * Oil metering valve not open far enough | * Check air pressure |
| | | * Check servomotor position |
| | * Oil valve not energized | * Check wiring path or replace valve |
| | * Fan motor not efficient | * Adjust or replace the motor |
| | * Fan or pump motor runs in the wrong way | * Change rotation |
| | * Obstructed nozzle | * Clean or replace the nozzle |
| | * Check valve in the tank locked or leaking | * Clean or replace the valve |
| | * Oil filter dirty<br>* Pump filter dirty | * Clean filter |
| | * Solenoid valve dirty or broken | * Clean or replace solenoid valve |
| **BURNER LOCKS OUT WITH FUEL FLOW RATE (NO FLAME)** | * Oil pressure too low | * Reset oil pressure |
| | * Nozzle dirty or damaged | * Clean or replace nozzle |
| | * Water in the tank | * Take off all the water from the tank |
| | | * Clean all filters |
| | * Suction too high | * Check suction before pump. If necessary clean filters. |
| | * Ignition electrodes grounded because dirty or damaged | * Clean or replace electrodes |
| | * Ignition electrodes badly set | * Check electrodes position referring to instruction manual |
| | * Cables damaged | * Replace cables |
| | * Bad position of cables in the ignition transformer or into the electrodes | * Improve the installation |
| | * Ignition transformer damaged | * Replace the transformer |
| **PUMP TOO NOISY** | * Suction too high (over 0,35 bar) (dirty filters, check valve in the tank locked, and so on ...) | * Clean filters<br>* Replace check valve in the tank |
| | * Flexible hoses damaged | * Replace flexible hoses |
| | * Air infiltration in the pipes | * Take off all infiltration |
| | * Pipe too long or too narrow | * Increase line size |
| **BURNER RUMBLES WHEN MODULA-TING TO HIGH FIRE** | * Burner is too lean | * Adjust air-oil ratio |
| | * Drawer assembly not set properly | * Check drawer position |
| | * Oil may be too hot | * Check oil temperature |
| | * Flame is blowing off head | * Check head position |
| **CARBON BUILD-UP ON THE FIRESIDES OF THE BOILER** | * Oil flame not retaining to head | |
| | * Dirty nozzle | * Clean the nozzle |
| | * Oil spray impinging on burner head | * Check position of the nozzle respect to the head |
| | * Spray angle of the nozzle too wide | * Reduce spray angle |
| **FLAME IRREGULAR OR SPARKING** | * Oil pressure at nozzle too low | * Reset oil pressure |
| | * Air flow rate too high | * Adjust air flow rate |
| | * Oil is too cold | * Adjust oil temperature |
| | * Dirt in the oil | * Check filters |
| | * Water in the fuel | * Take off all the water |
| | * Oil impingement on the combustion head | * Drawer assembly far too rear<br>* Nozzle is not protruding through centerhole of air diffuser<br>* Oil flame not retaining to the head |
| | * Nozzle dirty or damaged | * Clean or, if necessary, replace the nozzle |
| **BURNER LIGHTS BUT FLAME DOESN'T RETAIN TO BURNER HEAD** | * Drawer assembly not positioned correctly | * Move forward or backward |
| | * Nozzle too far forward through centerhole of diffuser | * Move nozzle backward respect to diffuser |
| | * Oil or air pressure at nozzle is too low | * Increase oil or air pressure |
| | * Air louver too open | * Reduce air louver opening |
| | * Too much spread between oil and air (or steam) pressure | * Set the spread to a proper value |
| **FLAME IRREGULAR OR SMOKING** | * Not enough combustion air | * Adjust air flow rate |
| | * Nozzle dirty or damaged | * Clean or, if necessary, replace the nozzle |
| | * Flame is too big for furnace or nozzle spray angle is wrong | * Check burner-furnace coupling<br>* Change nozzle with a suitable one |
| | * Nozzle spray angle wrong (flame too long or too wide) | * Replace nozzle |
| | * Boiler dirty | * Clean the boiler |
| | * Not enough suction at chimney | * Check chimney cleanness or size |
| | * Pressure at nozzle too low | * Reset oil pressure |
| | * Oil too cold | * Reset oil temperature |
| | * Combustion air inlet dirty | * Clean the air inlet |
| | * Flame is too small respect to furnace volume | * Replace nozzle or reset pump pressure |
| **FUEL GAS TEMPERATURE TOO HIGH** | * Boiler dirty | * Clean the boiler |
| | * Oil flow rate too high | * Adjust oil pressure or replace nozzle |

C.I.B. UNIGAS S.p.A.
Via L.Galvani, 9 - 35011 Campodarsego (PD) - ITALY
Tel. +39 049 9200944 - Fax +39 049 9200945/9201269
web site: www.cibunigas.it - e-mail: cibunigas@cibunigas.it

# Quick Guide

# LAMTEC
# BT 3**xx**

SISTEMA DI CONTROLLO ELETTRONICO
ELECTRONIC CONTROLSYSTEM
SISTEMA DE CONTROL ELECTRÓNICO
SYSTÈME DE CONTRÔLE ÉLECTRONIQUE

M12929CA 05/2018

# 1 SUMMARY


1 Summary ..... 2
2 OPERATING CONTROL AND DISPLAYS ..... 4
2.1 USER INTERFACE: ..... 4
*2.2 MENU FUNCTIONST:* ..... 4
3 MAIN MENU ..... 6
*3.1 INFORMATION MENU PATH* ..... 6
*3.1.1 INFORMATION PATH:* ..... 6
*3.1.2 BURNER DETAILS* ..... 7
*3.1.3 Display burner start-ups* ..... 8
*3.1.4 RECALL FAULT HISTORY* ..... 8
*3.1.5 SOFTWARE VERSION* ..... 10
*3.1.6 DISPLAY OF CHECK SUMS* ..... 10
*CRC16 check sums* ..... 10
*3.1.7 SERIAL NUMBER* ..... 11
*3.1.8 DISPLAY POSITIONS OF ACTUATING DRIVES* ..... 11
3.1.9 CHECK DIGITAL INPUTS/OUTPUTS ..... 12
*3.1.10 DIGITAL OUTPUTS* ..... 14
3.2 MANUAL MENU PATH ..... 16
3.2.1 Regolazione manuale % carico bruciatore ..... 16
*3.3* SETTINGS MENU PATH ..... 17
*3.3.1 ENTER PASSWORD* ..... 17
*3.3.2 PROGRAM SEQUENCE* ..... 18
*Set duration of pre-purge* ..... 18
*Set duration of post-purge* ..... 20
*Leakage test functions* ..... 20
*Activate valve leakage test prior to ignition* ..... 21
*Check valve leakage test after flame OFF* ..... 21
*Set duration of valve leakage test* ..... 22
*Activate the pilot burner in gas operation* ..... 22
*Set pilot burner in oil operation* ..... 23
*Configuration of actuating outputs* ..... 23
*Curve setting oF actuating drives* ..... 23
*Eliminare curve* ..... 25
UI300 display settings ..... 26
*3.4 OTHER DISPLAYS* ..... 26
No connection between UI300 and BT300 ..... 26
*Termination* ..... 26

4 LIST OF FAULT CODES ..... 27
5 ASSIGNMENT OF CONFIGURATION FAULT 107 ..... 30
6 ASSIGNMENT OF INTERNAL FAULT 999 ..... 31
7 SETTING THE BURNER CURVE ..... 37
8 SETTING THE IGNITION POINT WITH BURNER IN STAND-BY ..... 40
9 SETTING WITH BURNER ON ..... 42
8 SETTING OF A NEW CURVE WITH VSD (optional) ..... 45

- This Guide for quick start-up summarises the basic operations that are necessary to start up and set the BT.... control unit. The information contained here do NOT replace the user manual and are only intended for qualifie personnel in charge of control unit maintenance.
- The information contained in this catalogue is not binding The manufacturer reserves the right to change the technical data and any other data it contains.

# 2 OPERATING CONTROL AND DISPLAYS

## 2.1 USER INTERFACE:

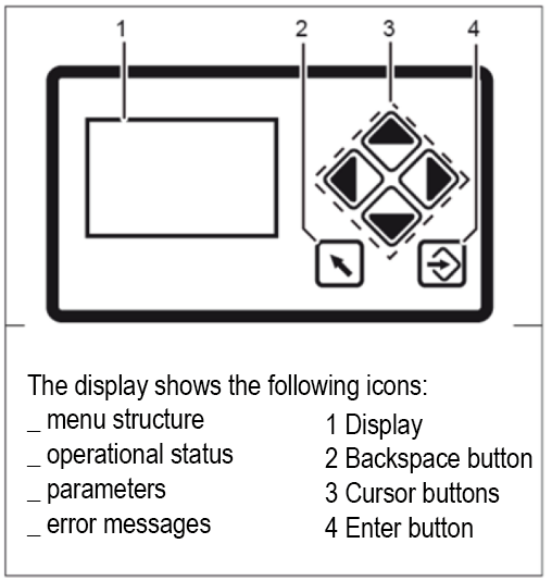


 Jump to previous window

 You navigate in the menu using the cursor keys.

 Enter key: For to confirm the value or operation

## *2.2 MENU FUNCTIONST:*

 **Information**

Select the INFO path for information about the following:
the burner
errors that have occurred
the software version
the serial number
actuating drive positions (current damper position for each channel)
digital inputs/outputs

**Manual**

Select the MANUAL to :
start and stop the burner manually
adjust the internal burner firing-rate

*If the burner is switched on manually via display, the BT300 no longer responds to the "Burner ON" signal input at connector X10.2.*
*It is for this reason that the burner will turn off only with the intervention of the “safety chain”, connector X07, which will send it in lock-out!*

**Settings**

Select the SETTINGS path for information on, and to make settings or, the following:
the password
the burner settings (display and settings)
the actuator device settings (display)
the air/fuel control system
the "delete"
the display settings

# 3 MAIN MENU

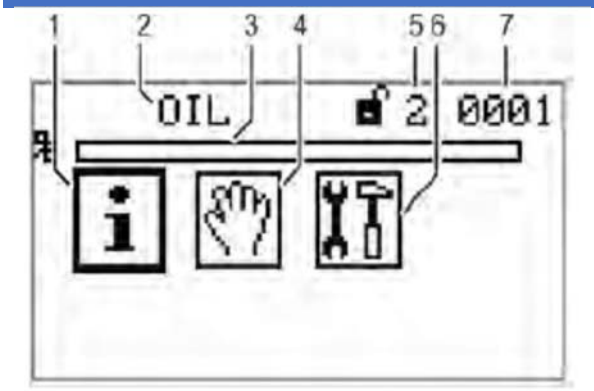


1 INFORMATION menu path [selected]
2 Display of fuel used
3 Bargraph of internal firing-rate in % (0 -100)
4 MANUAL menu path
5 Access level 2
6 SETTINGS menu path
7 Window number

## 3.1 INFORMATION MENU PATH

### 3.1.1 INFORMATION PATH:

Use the cursor keys 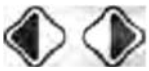 to select the path  and confirm this with Enter 

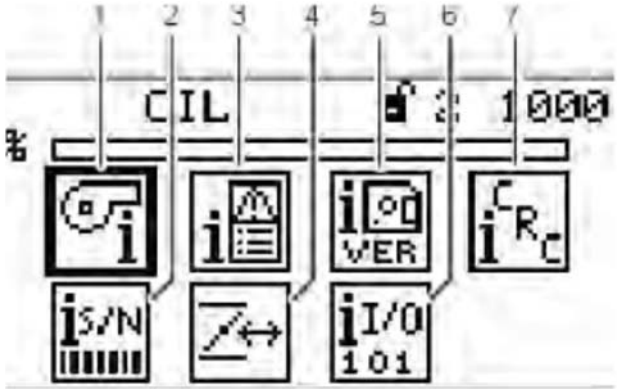


1 Selected burner information [selected]
2 Serial number
3 Fault history
4 Confguration of actual value of actuating outputs (display only)
5 Software version
6 Digital inputs/outputs
7 Check sum display

### 3.1.2 BURNER DETAILS

Use the cursor keys 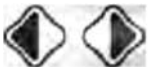 to select the path  and confirm this with Enter 
The display shows the "System Information" menu window.

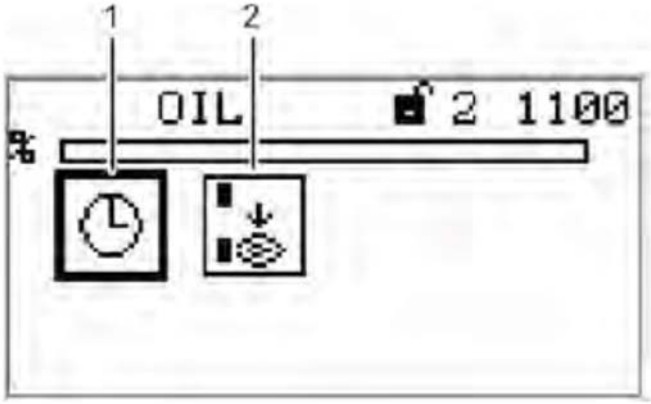


| | |
|---|---|
| 1 | For display of operating hours [selected] |
| 2 | Number of burner start-ups |

Use the cursor keys 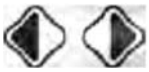 to select the path  and confirm this with Enter 
The display shows the "Display operating hours" menu window.

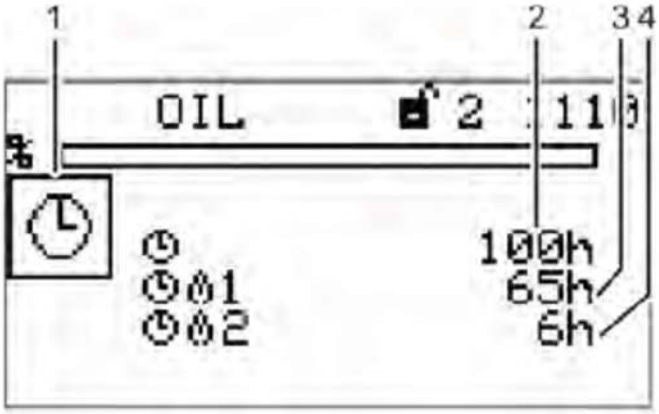


| | |
|---|---|
| 1 | Pictogram operating hours |
| 2 | Total number of operating hours (device connected to mains voltage) |
| 3 | Number of operating hours, oil operation |
| 4 | Number of operating hours, gas operation |

### 3.1.3 DISPLAY BURNER START-UPS

Use the cursor keys 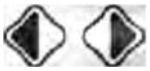 to select the path  and confirm this with Enter 
The display shows the "Start-up counter" menu window

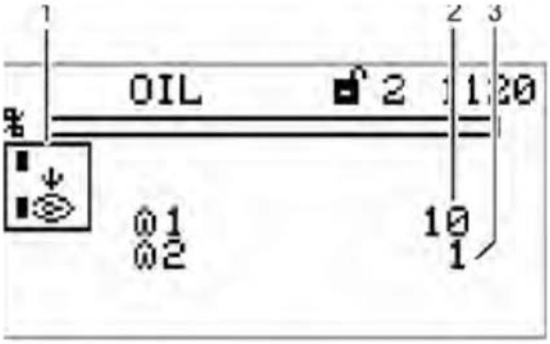


| | |
|---|---|
| 1 | Pictogram burner start-up |
| 2 | Number of burner start-ups, oil operation |
| 3 | Number of burner start-ups, gas operation |

### 3.1.4 RECALL FAULT HISTORY

From the home screen, use the cursor keys  to select the path  and confirm with Enter 

Use again the cursor keys 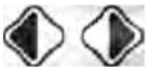 to select the path  and confirm this with Enter 

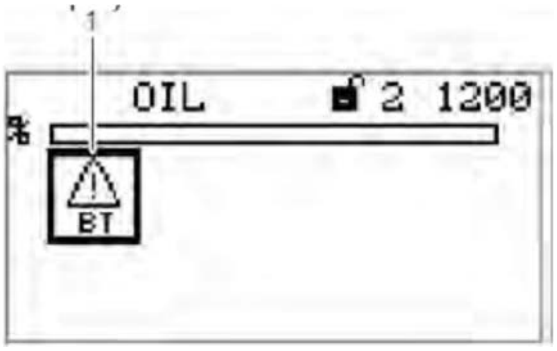


Fault history selection menu

Use the cursor keys 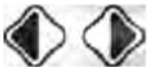 to select the path  and confirm this with Enter 

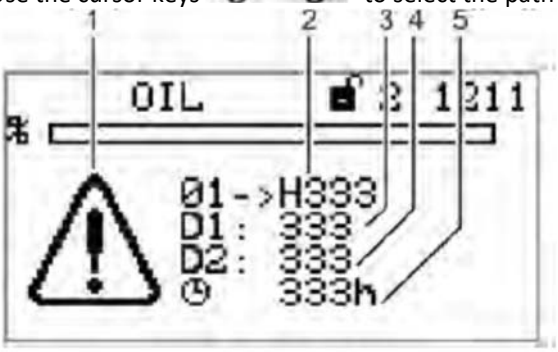


| | |
|---|---|
| 1 | Error code-display pictogram |
| 2 | Fault code (the last 10 faults are stored, in which no. 01 is the most recent fault) |
| 3 | Diagnostic code 1 |
| 4 | Diagnostic code 2 |
| 5 | Number of operating hours at the moment, the fault occurs |

### 3.1.5 SOFTWARE VERSION

Use the cursor keys to select the path and confirm this with Enter

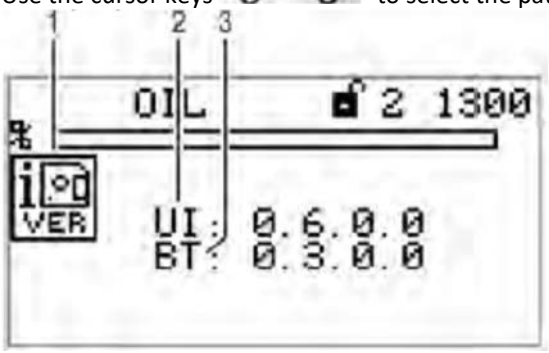


1 Software version pictogram
2 UI300 software version (user interface)
3 BT3xx software version (BurnerTronic)

### 3.1.6 DISPLAY OF CHECK SUMS

Use the cursor keys to select the path and confirm this with Enter

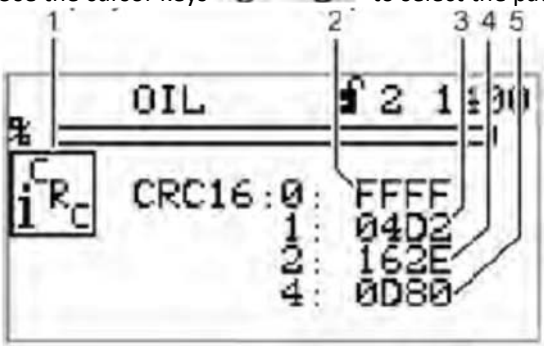


1 Check sums pictogram
2 Check sum, access level 0
3 Check sum, access level 1
4 Check sum, access level 2
5 Check sum, access level 4

#### CRC16 CHECK SUMS

The check sums are formed from the device parameters. In each case, the BT3xx calculates a check sum for the parameters from access levels 0, 1, 2 and 4. This is displayed as a hex-adecimal value. The check sums are used to determine whether or not the value for one or more parameters present in the corresponding access level has been changed.

### 3.1.7 SERIAL NUMBER

(device BT3xx and display UI300)

Use the cursor keys 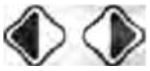 to select the path  and confirm this with Enter 

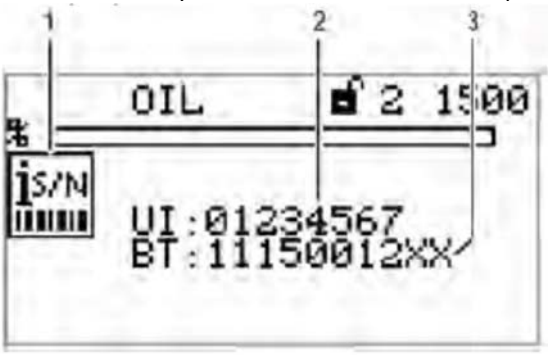


| | |
|---|---|
| 1 | Serial number pictogram |
| 2 | User interface serial number UI300 |
| 3 | BurnerTronic serial number BT3xx |

### 3.1.8 DISPLAY POSITIONS OF ACTUATING DRIVES

From main page (see paragraf 2.4) use the cursor keys 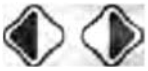 to select the path  and confirm this with Enter 

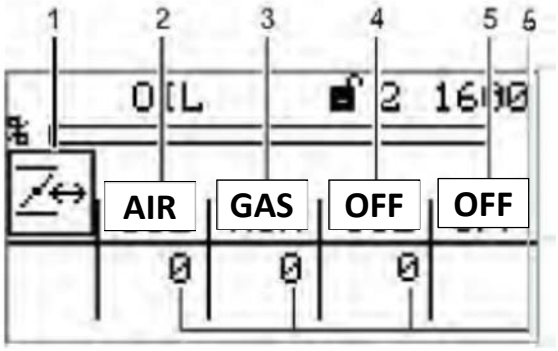


| | |
|---|---|
| 1 | Actuating drive pictogram |
| 2 | Actuating drive channel 1 (air) |
| 3 | Actuating drive channel 2 (combustible) |
| 4 | Actuating drive channel 3 (off, air, FGR actuator) |
| 5 | Optional channel OFF; control of frequency converter |
| 6 | Actuatuing drive's actual position |

*The assignment of the channels is depending on the configuration!*

### 3.1.9 CHECK DIGITAL INPUTS/OUTPUTS

From main page (see chapter 3) use the cursor keys 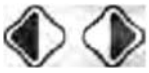 to select the path  and confirm this with Enter 

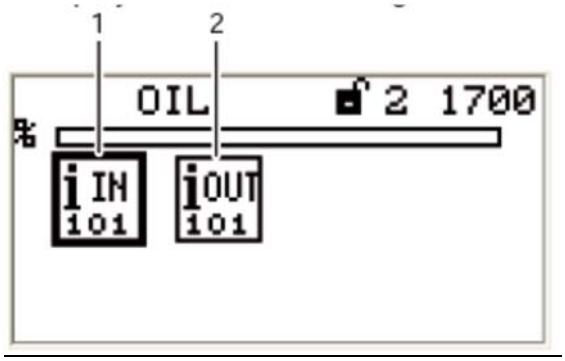


| | |
|---|---|
| 1 | Digital inputs pictogram [selected] |
| 2 | Digital outputs pictogram |

Select the menu  and confirm this with Enter 

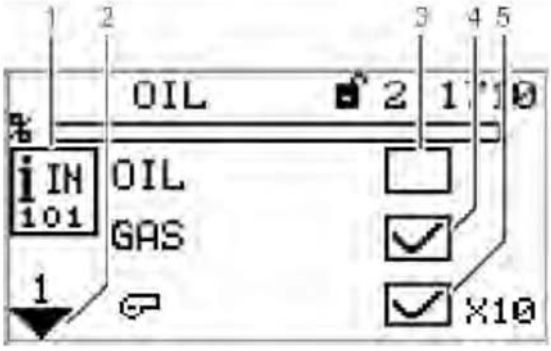


Page 1 of inputs menu

| | |
|---|---|
| 1 | Digital inputs pictogram |
| 2 | Jump to next page |
| 3 | Fuel selection oil [no] |
| 4 | Fuel selection gas [yes] |
| 5 | Burner start [yes] – terminal X10 |

*The signals in points 3 and 4, “Page 1 input menu”, are "logical" signals and not "physical".*
*Background: some signals may have more than one source (terminal, LSB, field buses, parameters).*

Use the cursor key  to select the next page and confirm this with Enter 

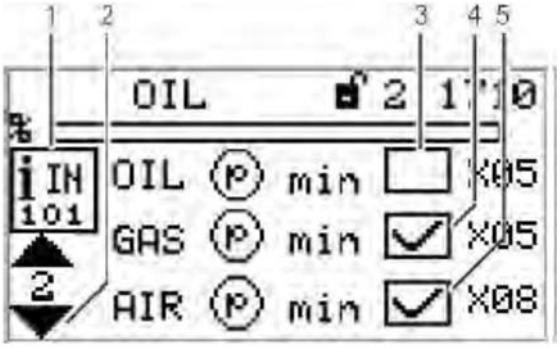

Page 2 of inputs

1 Digital inputs pictogram
2 Jump to next page
3 Oil pressure min present [no] – terminal X05
4 Gas pressure min present [yes] – terminal X05
5 Air pressure min present [yes] – terminal X08

Use the cursor key  to select the next page and confirm this with Enter 

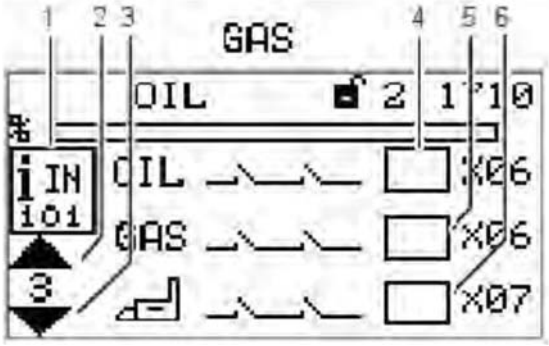

Page 3 of inputs

1 Digital inputs pictogram
2 Jump to previous page
3 Jump to next page
4 Safety interlock chain oil closed [no] – terminal X06
5 Safety interlock chain gas closed [no]
6 Safety interlock chain boiler closed [no]

*The signals in points 4 and 5 in Page 2 of inputs menu are "logical" signals, not "physical". The BT3xx supports either oil or gas operation, but cannot be switched. There-fore there are no separate signals for the oil or gas safety interlock chain. The signal on terminal X06 is thus generally known as "safety interlock chain burner".*

Use the cursor key  to select the next page and confirm this with Enter 

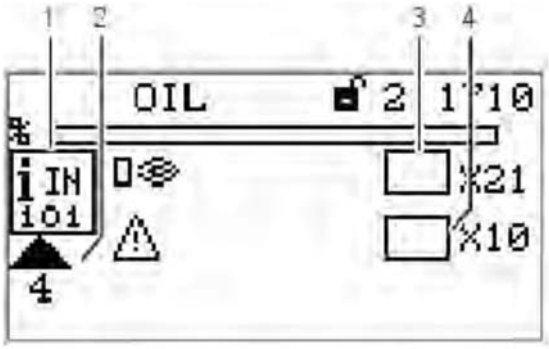


Page 4 of inputs

1 Digital inputs pictogram
2 Jump to previous page
3 Flame signal present [no] – terminal X21
4 Fault release [no] – terminal X10

### 3.1.10 DIGITAL OUTPUTS

From previous page (see chapter 3) use the cursor keys 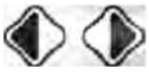 to select  and confirm this with Enter 

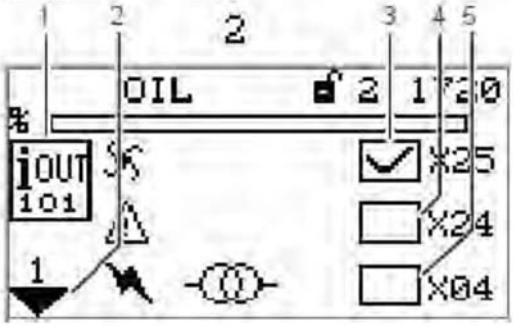


Page 1 digital outputs

1 Digital outputs pictogram
2 Jump to next page
3 Fan [on] – terminal X25
4 Error [off] – terminal X24 (adjustable with P 809)
5 Ignition transformer [off] – terminal X04

Use the cursor key  to select the next page and confirm this with Enter 

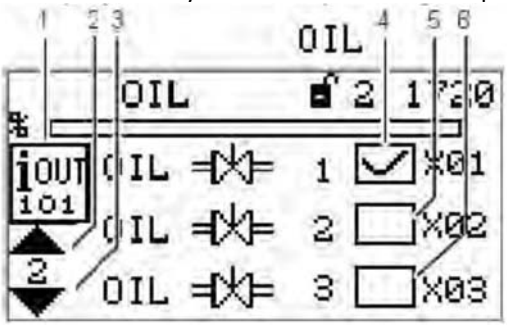


Page 2 digital outputs

1 Digital outputs pictogram
2 Jump to previous page
3 Jump to next page
4 Oil valve 1 [on] – terminal X01
5 Oil valve 2 [off] – terminal X02
6 Oil valve 3 [off] – terminal X03

Use the cursor key  to select the next page and confirm this with Enter 

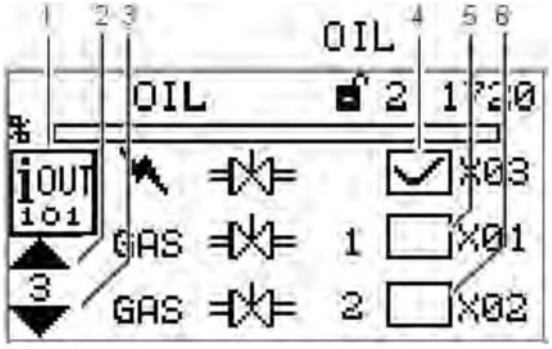


Page 3 digital outputs

1 Digital outputs pictogram
2 Jump to previous page
3 Jump to next page
4 Ignition valve [on] – terminal X03
5 Gas valve 1 [off] – terminal X01
6 Gas valve 2 [off] – terminal X02

Use the cursor key  to select the next page and confirm this with Enter 

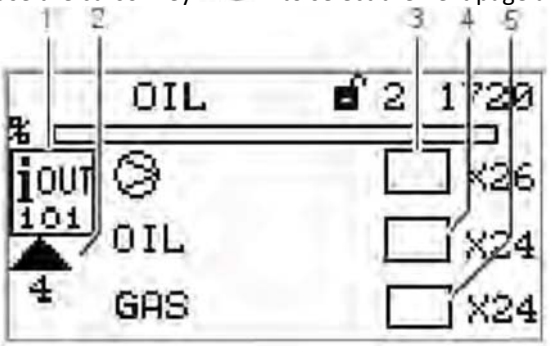


Page 4 digital outputs

1 Digital outputs pictogram
2 Jump to previous page
3 Oil pump [off] – terminal X26
4 Fuel selection oil [off] – terminal X24 (adjustable with P 809)
5 Fuel selection gas [off] – terminal X24 (adjustable with P 809)

## 3.2 MANUAL MENU PATH

From previous page (see chapter 3) use the cursor keys to select and confirm this with Enter

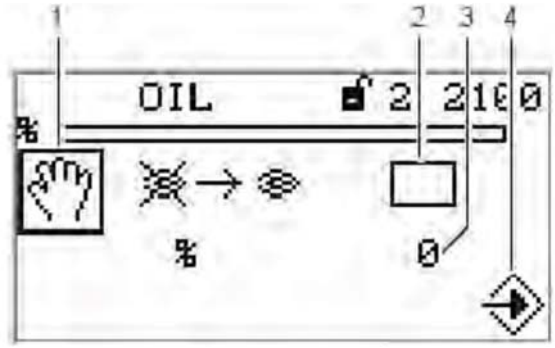


1 Pictogram Manual
2 Start burner manually [off]
3 Adjust burner manual output
4 Pictogram confirm settings

The "Burner ON" control loop does not need to be switched on to start the burner from this menu. The user interface assumes control in this menu. If there is no contact with "Burner ON" signal from other sources (terminal X10.2), the software switches off the burner when you exit the menu.

*If the burner is switched on manually via display, the BT300 no longer responds to the "Burner ON" signal input at connector X10.2. It is for this reason that limiters, monitors and other similar safety functions must not be used with this input!*

*Leaving the window terminates burner operation!*

### 3.2.1 REGOLAZIONE MANUALE % CARICO BRUCIATORE

Use the cursor keys to select the adjustment of the burner firing-rate in % and confirm this selection with Enter

*Please note, that you can adjust the burner firing-rate only while burner is running. Start the burner before you adjust the burner firing-rate as mentioned above.*

## 3.3 SETTINGS MENU PATH

From previous page (see chapter 3) use the cursor keys to select and confirm this with Enter

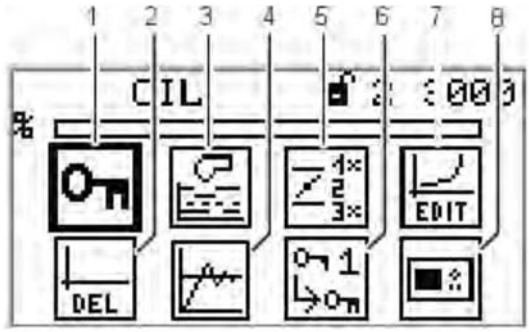


| | |
|---|---|
| 1 | Password pictogram (selected) |
| 2 | Delete curves |
| 3 | Display program settings |
| 4 | Setting modulating controller (module LCM100) |
| 5 | Read out actuating outputs configuratio |
| 6 | Password settings |
| 7 | Curve settings |
| 8 | Display settings |

### 3.3.1 ENTER PASSWORD

***Warning:***
*Password level 0 = setting view*
*Password level 1 = change curve points*
*Password level 2 = changing burner parameter settings (pre-purge, gas leakage, burner parameter, PID, etc.)*

Use the cursor keys to select and confirm this with Enter

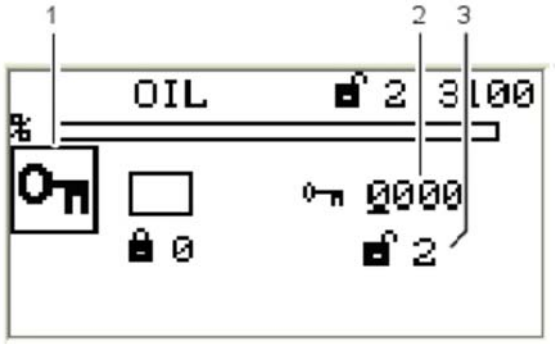


| | |
|---|---|
| 1 | Password pictogram (selected) |
| 2 | Enter password |
| 3 | Access level 2 displayed with access authorisation or acces level 1 with access authorisation depending of the phases |

a. Use the cursor keys to select the password fiel you wish to change.

b. Change the number with the cursor keys .

c. Confirm the password with Enter

### 3.3.2 PROGRAM SEQUENCE

Use the cursor keys 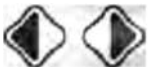 to select  and confirm this with Enter 

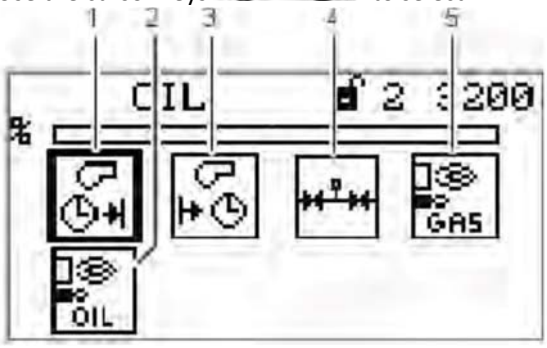


| | |
|---|---|
| 1 | Duration of pre-purge [selected] |
| 2 | Pilot burner oil operation |
| 3 | Duration of post-purge |
| 4 | Valve gas leakage test |
| 5 | Pilot burner gas operation |

#### SET DURATION OF PRE-PURGE

Use the cursor keys 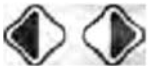 to select  and confirm this with Enter 

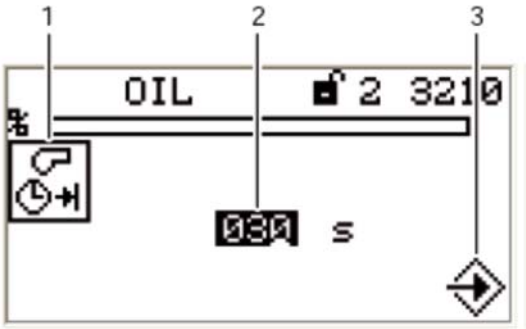


| | |
|---|---|
| 1 | Duration of pre-purge pictogram |
| 2 | Pre-purge time set |
| 3 | Accept value by pressing Enter |

The countdown starts for to confirm the writing value beetwen the display UI300 and burner tronic BT3xx.

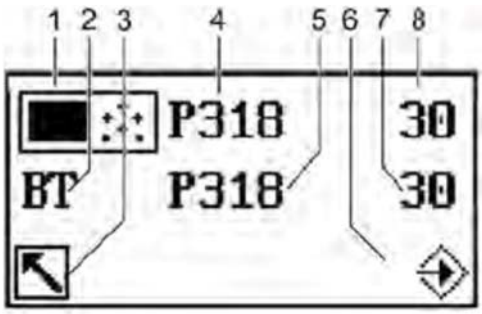


| | |
|---|---|
| 1 | UI300 pictogram |
| 2 | BT3xx pictogram |
| 3 | Cancel (back) |
| 4 | Parameter number UI300 |
| 5 | Parameter number BT300 |
| 6 | Transfer by pressing Enter (flashing) |
| 7 | Value for UI300 |
| 8 | Value for BT300 |

*Do not accept the value until the values for UI300 and BT300 are the same! The value for the parameter has to be confirmed by pressing Enter in the space of the count-down (8s)!*

a- Confirm the entry in time by pressing Enter. The value is accepted. The display shows the following page:

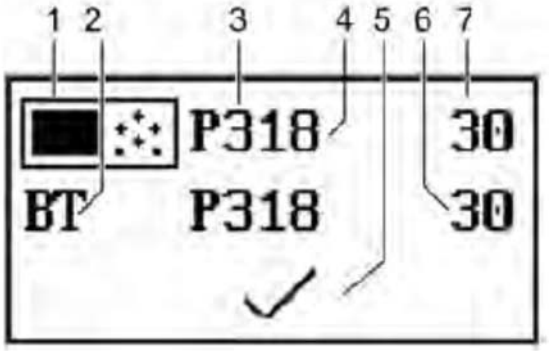


Display after successfully transferred data

1 UI300 pictogram
2 BT3xx pictogram
3 Parameter number UI300
4 Parameter number BT300
5 Pictogram discard parameters
6 Value for BT300
7 Value for UI300

*If both values are equivalent, the value can be accepted by pressing Enter. If there is a discrepancy with the values, terminate the "acceptance" process.*

b- Reject the change made to the parameter select the back key The change made to the parameter is not accepted. The following page appears :

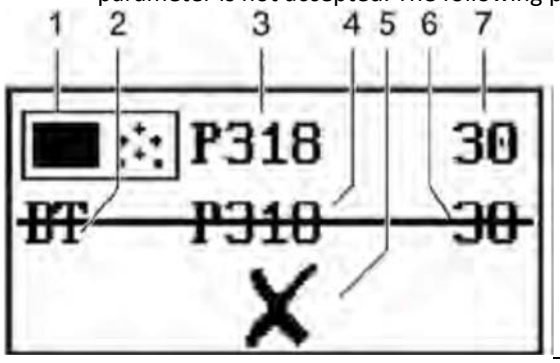


Display of invalid data transfer

1 UI300 pictogram
2 BT3xx pictogram
3 Parameter number UI300
4 Parameter number BT300
5 Discard parameters pictogram
6 Value for BT300
7 Value for UI300

*The following sequence of events for confirming or discarding the entry is exactly the same for all parameter entries. Therefore this process is no longer illustrated in detail in the following explanations for the parameter settings. You will simply find this text: "**Accept or discard the entry!**"*

## *SET DURATION OF POST-PURGE*

Use the cursor keys to select and confirm this with Enter

The display shows the "Duration of post-purge".

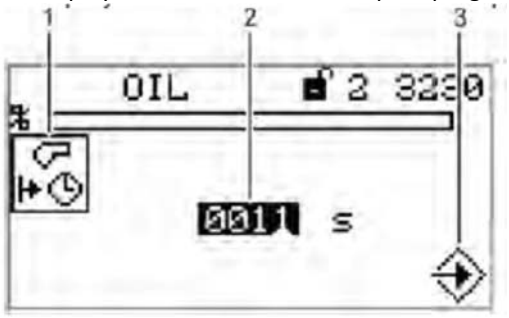


1 Duration of post-purge pictogram
2 Set duration of post-purge
3 Accept setting by pressing Enter

- Use the cursor keys to select the number you wish to change .
- Change the value of the number with the cursor keys .
- Confirm the entry with Enter .

"Accept or discard the entry!"

## *LEAKAGE TEST FUNCTIONS*

Use the cursor keys to select and confirm this with Enter

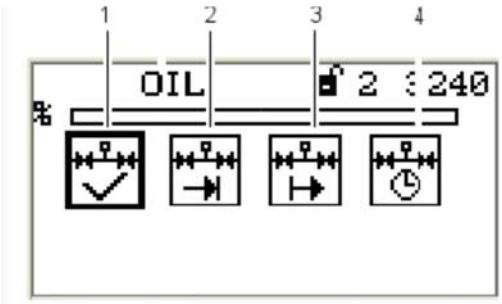


"Gas leakage" menu

1 Leakage test ON/OFF
2 Leakage test before ignition
3 Leakage test after ignition
4 Duration of leakage test

"Accept or discard the entry!"

*Access level 2 is required to set this function!*

## *ACTIVATE VALVE LEAKAGE TEST PRIOR TO IGNITION*

Use the cursor keys to select and confirm this with Enter

Change the ON/OFF functional state using the cursor keys and confirm this with Enter
The display shows the valve leakage test prior to ignition menu.

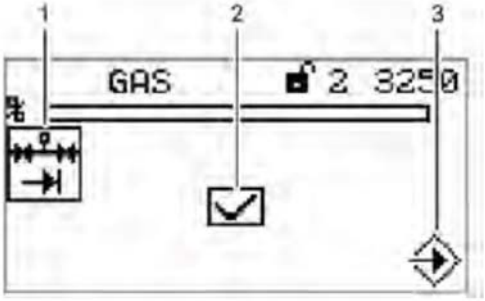

Valve leakage test prior to ignition menu

1 Valve leakage test prior to ignition pictogram
2 Display valve leakage test (active)
3 Accept setting by pressing Enter

The valve leakage test is set!

"Accept or discard the entry!"

*Access level 2 is required to set this function!*

## *CHECK VALVE LEAKAGE TEST AFTER FLAME OFF*

Use the cursor keys to select and confirm this with Enter

Change the ON/OFF functional state using the cursor keys and confirm this with Enter
The display shows the valve leakage test after flame OFF menu.

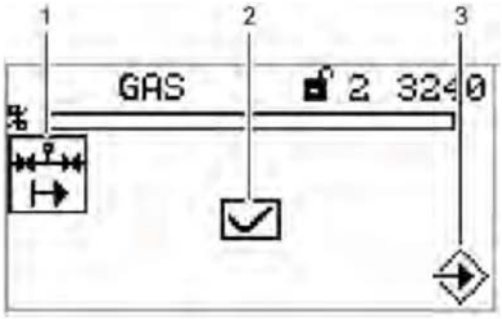

Valve leakage test after flame OFF

1 Valve leakage test after flame OFF pictogram
2 Display valve leakage test
3 Accept setting by pressing Enter

La prova di tenuta valvola è stata impostata!

"Accept or discard the entry!"

*Access level 2 is required to set this function!*

## *SET DURATION OF VALVE LEAKAGE TEST*

Use the cursor keys 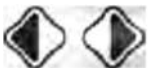 to select  and confirm this with Enter 

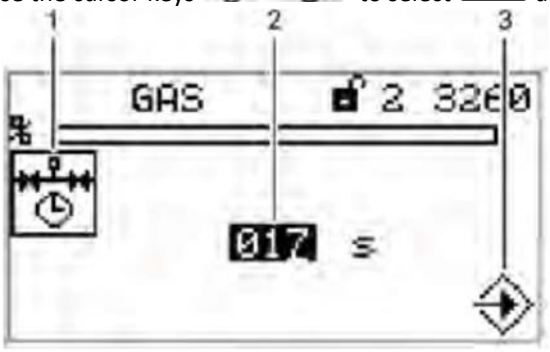


Valve leakage test menu

1 Duration of valve leakage test pictogram
2 Set duration of valve leakage test
3 Accept setting by pressing Enter

- Use the cursor keys 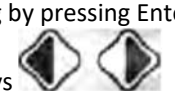 to select the number you wish to change.
- Change the value of the number with the cursor keys  .
- Confirm the entry with Enter 

"Accept or discard the entry!"

*Access level 2 is required to set this function!*

## *ACTIVATE THE PILOT BURNER IN GAS OPERATION*

Use the cursor keys 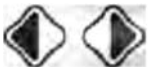 to select  and confirm this with Enter 

Change the ON/OFF functional state using the cursor keys  . and confirm this with Enter 
The display shows the "pilot burner in gas operation"menu

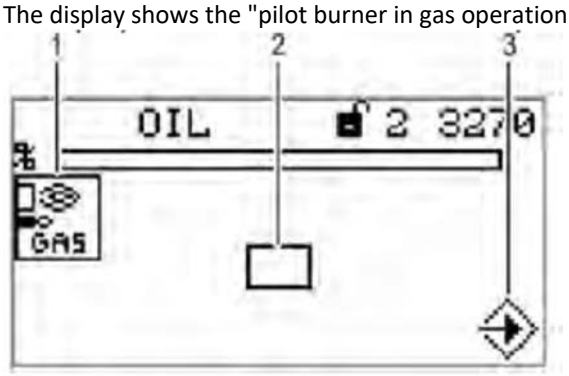


Pilot burner in gas operation menu

1 Pilot burner in gas operation pictogram
2 Activate the pilot burner in gas operation
3 Accept setting by pressing Enter

"Accept or discard the entry!"

*Access level 2 is required to set this function!*

## *SET PILOT BURNER IN OIL OPERATION*

Use the cursor keys to select and confirm this with Enter

Change the ON/OFF functional state using the cursor keys and confirm this with Enter
The display shows the "pilot burner in oil operation"menu "

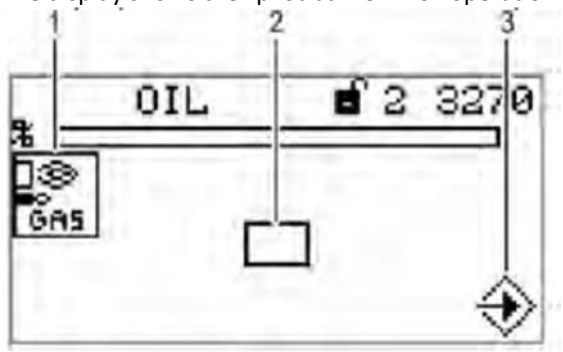


Pilot burner in oil operation menu

1 Pilot burner in oil operation pictogram
2 Activate pilot burner in oil operation
3 Accept setting by pressing Enter

"Accept or discard the entry!"

*Access level 2 is required to set this function!*

## *CONFIGURATION OF ACTUATING OUTPUTS*

Use the cursor keys to select and confirm this with Enter

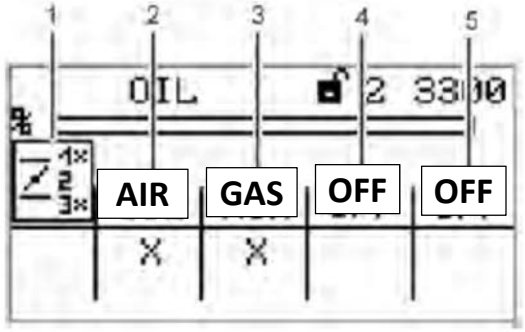


Configuration of actuating outputs menu

1 Actuating drive position pictogram
2 Display channel 1, air
3 Display channel 2, combustible
4 Display channel 3, (off, air or actuator FGR)
5 Optional channel, off

## *CURVE SETTING OF ACTUATING DRIVES*

Use the cursor keys to select and confirm this with Enter

*If you keep key pressed for more than 2 seconds in the menue "Curve setting of actuating drives" you will cause a fault shut-down.*

The display shows the curve setting menu ".

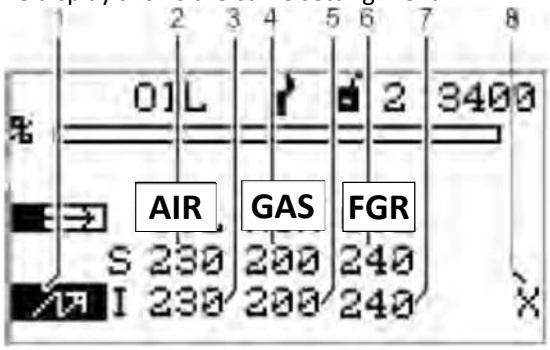


Curve setting menu

1 Ignition position firing-rate point
2 Set-point channel 1, air
3 Actual value channel 1, air
4 Set-point channel 2, combustible
5 Actual value channel 2, combustible
6 Set-point channel 3, (off, air or actuator FGR)
7 Actual value channel 3 (off, air or actuator FGR)
8 Curve data for this firing-rate point already exists

- Use the cursor keys to set the firing-rate point and confrm with Enter Set-point channel 1 is chosen (displayed in reverse).
- Use the cursor keys to set the channel's actuator position.
- Use the cursor keys to switch to the next channel.
- Use the cursor keys to set actuator's position in the selected firing-rate point.
- Set the position of the actuator at the desired combustion point with the cursor key.

*The actuators run to the adjusted position immediatelly after adjusting it.*

The fan motor must run to adjust channel 4.

"Accept or discard the entry!"

The display changes to the firing-rate selection menu.

*The following firing rate point are available:*

*Ignition point , 200, 250, 300, 400, 500, 600, 700, 800, 900, 999*

- Set your firing rate points as described above and confirm it with Enter

*If you keep key pressed for more than 2 seconds themenue "Curve setting of actuating drives" you will cause a fault shut-down.*

*ELIMINARE CURVE*

Use the cursor keys 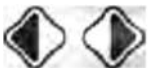 to select  and confirm this with Enter 

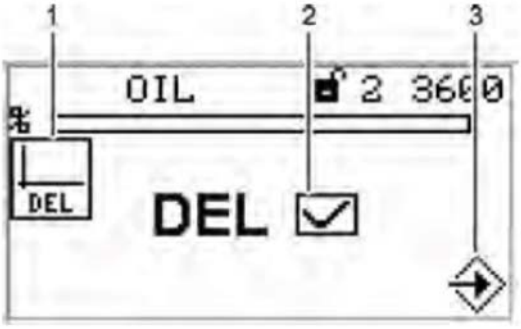


Delete curves menu

1 Delete curves pictogram
2 Delete curves selected
3 Confir deletion of curves

The display shows the "confirmation prompt".

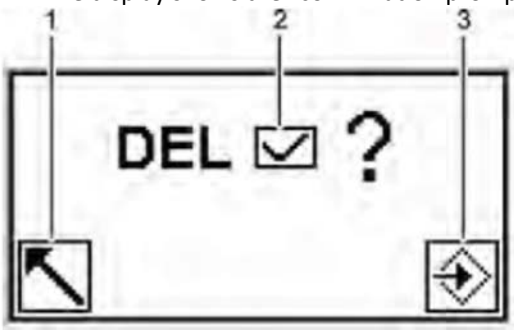


Confirmation prompt of the delete curves menu

1 Back to previous menu
2 Delete values [selected]
3 Proceed with deletion of values

Select Enter  . The curve values are deleted. The display shows the "values deleted" menu.

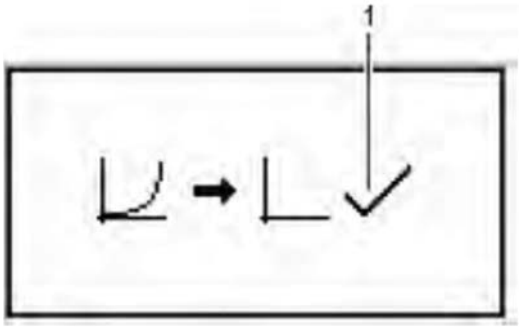


Values deleted menu

1 Values deleted

### UI300 DISPLAY SETTINGS

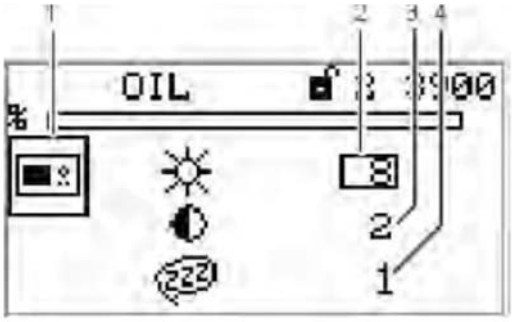


Display settings menu

1 Display settings menu
2 Brightness
3 Contrast
4 Waiting time for screen saver

*A "0" value cannot be entered for the screen saver!.*

## 3.4 OTHER DISPLAYS

### NO CONNECTION BETWEEN UI300 AND BT300

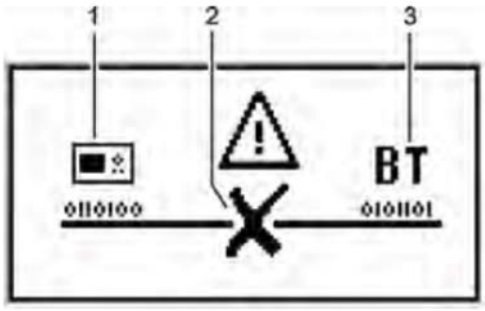


No connection

1 UI300 user interface pictogram
2 Symbol for no connection
3 BT300 burner control

Display shown e.g. when using the LSB remote software and the communication between BT300 and UI300 is temporarily not available.

### *TERMINATION*

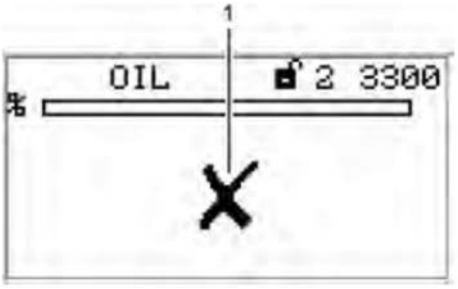


Termination

1 Communication error pictogram – no connection available

# 4 LIST OF FAULT CODES

*To see the "historical lock-out" see paragraph 3.1.4*

| Fault Code | D1 | D2 | Description |
|---|---|---|---|
| 0 | Unknown fault (internal error) | | |
| 1 | Pre-ventilation signal is still active. | | |
| 2 | Parasitic light detected | | |
| 3 | Flame blow-off during ignition | | |
| 4 | Flame blow-off during operation | | |
| 5 | Flame signal does not appear during the first safety time | | |
| 6 | Flame signal extinguishes during stabilization time | | |
| 7 | Flame signal extinguishes during first safety time | | |
| 8 | Flame signal extinguishes during the second safety time | | |
| 9 | Flame signal does not appear during the safety time | | |
| 10 | Flame signal extinguishes during the safety time | | |
| 11 | Monitoring for parasitic light does not last the required 5 seconds | | |
| 13 | Main flame appears during ignition | | |
| 103 | Miscellaneous data invalid | | |
| 105 | Curve data are invalid or not available. | Curve set / Fuel number | |
| 106 | Parameters between both controllers are inconsistent Possible cause | Parameter No. | |
| 107 | Configuration is not valid see chapter 3 Assignment of | | |
| 120 | Different operation modes on both controllers | | |
| 121 | Correction is out of range | Channel (x) | |
| 141 | Channel feedback changes too fast | Channel (x) | |
| 151 | Recirculation damper is deactivated | Channel (x) | |
| 170 | Short circuit of LDR flame detector | | |
| 191 | First monitoring band exceeded for to long | Channel (x) | |
| 201 | First monitoring band fall short for to long | Channel (x) | |
| 211 | Second monitoringband exceeded for to long | Channel (x) | |
| 221 | Second monitoring band fall short for to long | Channel (x) | |
| 231 | Fuel/air ratio control is blocked | Channel (x) | |
| 241 | Actuator doesn´t move, i.e. no position feedback | Channel | 0 = backward, 1 = forward |
| 251 | Actuator cannot find reference position | Channel | |
| 261 | Actuator returns invalid position (difference to target position too | Channel | |
| 271 | Actuator position changes too fast, e.g. slip | Channel | |
| 281 | Actuator feedback not correct | Channel | |
| 320 | Open broken wire at firing rate input | | |
| 321 | Open broken wire at feedback channel | Channel (x) | |
| 351 | Invalid fuel change while burner is running | | |
| 352 | Invalid combination of fuel signals (no signals) | | |
| 353 | Invalid combination of fuel signals (several signals) | | |
| 362 | Fault shut-down due to a missing bruner maintenance | | |
| 363 | Smallest valid O2 value deceeded | | |
| 371 | Outpout for internal firing-rate is defective | | |
| 372 | Difference of the burner firing-rate values between main processor | | |
| 381 | Deviation between main processor an watchdog controller too | Correction channel | |
| 391 | Curve set has changed during programming | | |
| 393 | Emergency shut-down activated | | |
| 394 | Burner ON/OFF signal from the user interface turned off | | |
| 451 | Being operating mode for ignition not all channels are in ignition | Channel | |
| 600 | Program monitoring time (FAT) exceeded | | |
| 601 | Failure during leakage test: gas pressure still active | | |
| 602 | Failure during leakage test: no gas pressure detected | | |
| 603 | Manual venting of the gas line required! | | |

| | | | |
|---|---|---|---|
| 607 | Invalid drop of ignition position acknowledgement | | |
| 608 | Invalid drop of the boiler safety interlock chain | | |
| 609 | Invalid drop of the gas safety interlock chain | | |
| 610 | Invalid drop of the oil safety interlocj chain | | |
| 611 | Gas pressure too low | | |
| 613 | Air pressure signal is missing | | |
| 617 | Permanent pilot flame extinguishes during operation | | |
| 624 | Oil pressure too low | | |
| 711 | Invalid change of the operation mode | Internal state information | |
| 713 | Invalid signal combination at input terminals during operating | | |
| 714 | Invalid signal combination at input terminals during operating | | |
| 715 | Invalid signal combination at input terminals during operating | | |
| 716 | Invalid signal combination at input terminals during operating | | |
| 717 | Invalid signal combination at input terminals during operating | | |
| 719 | Fuel valves are open for too long without a flame | | |
| 720 | Ignition transformer activated too long | | |
| 721 | Ignition valve openes for too long | | |
| 722 | Fuel valves open in maintenance mode | | |
| 723 | Ignition process needs too much time | | |
| 724 | Oil pressure too low | | |
| 725 | Oil valves are open while gas is selected | | |
| 727 | Main gas 1 opens unexpectedly | | |
| 728 | All three gas valves open for too long | | |
| 729 | Ignition process lasts for too long (without pilot burner) | | |
| 730 | Maintenance mode without pilot burner | | |
| 731 | Ignition valve opens without pilot burner | | |
| 732 | Invalid signal combination at input terminals during operation | | |
| 734 | Pre-ventilation period falls below the minimum | | |
| 739 | Leakage test: Main gas valve 2 opens for too long | | |
| 740 | Leakage test: Main gas valve 1 leaky | | |
| 741 | Leakage test: Main gas valve 1 opens for too long | | |
| 742 | Leakage test: Main gas valve 2 leaky | | |
| 743 | Flame monitoring: Flame burns for too long after shutdown | | |
| 745 | Program monitoring time exceeded | | |
| 746 | Solenoid valve cannot be switched off | | |
| 747 | Leakage test: Venting into the burner is not allowed | | |
| 751 | The bus-card runs into time-out. | | |
| 759 | Leaving "Setting-mode" automatically after 24 hours | | |
| 760 | Fuel change during setting-mode is not allowed | | |
| 763 | Different curve selection on main processor and watchdog | | |
| 764 | CO-controller - internal curve set failure | | |
| 800 | Parameter defective | Parameter No | |
| 801 | Channel control mode is inconsistent between main processor and | Channel | |
| 802 | Integration of a channel into the fuel/air ratio control takes too | Channel | |
| 803 | Channel is locked for too long (fatal error, no automatic restart | Channel | |
| 804 | Channel mode of the fuel/air ratio control does not match the type | Channel | |
| 805 | Directly controlled channel runs to an invalid position, i.e. a | Channel + Date | |
| 888 | Fault interlocking active! | Reference no. | |
| 889 | The gap between two remote fault releases is too short | | |
| 921 | Output terminal for oil valve defective | | |
| 922 | Output terminal for ignition transformer defective | | |
| 923 | Output terminal for gas valve 1 defective | | |
| 924 | Output terminal for gas valve 2 defective | | |
| 925 | Output terminal for ignition transformer defective | | |
| 928 | Output terminal for oil pump defective | | |
| 929 | Output terminals for fan defective | | |

| | | | |
|---|---|---|---|
| 986 | Dynamic range test recognizes an invalid feedback | Channel | |
| 987 | Change-over during staged operation takes too much time | | |
| 985 | VSM diagnosis error possible cause of error: BurnerTronic | | |
| 988 | Fuel selection relay in the DFM is defective or inconsistent | | |
| 989 | Plausibility test of actuator feedback in programmed curve failed | | |
| 990 | Power failure | | |
| 996 | Secure parameter writing could not be finished. Device is blocked. | | |
| 999 | Internal Error! See chapter 4 Assignment of internal fault 999 | | |

# 5 ASSIGNMENT OF CONFIGURATION FAULT 107

| D1 | Description |
|---|---|
| 1 | Too many channels in configuration parameter 804. |
| 2 | No channel at all configured. |
| 3 | Permanent ignition burner configured (parameter 302, 303), but no ignition flame monitoring device present (parameter 800). |
| 6 | Prepurge suppression via external signal not implemented. |
| 7 | Fuel change via Off and an unlimited post ventilation configured. |
| 8 | Prepurge time is smaller than minimal prepurge time. |
| 9 | For stages oil mode. |
| 13 | Australian flame monitoring configured, but no ignition flame monitoring device. |
| 18 | Standby operation at BT300 not allowed. |
| 19 | Invalid fuel change selected. |
| 20 | BT300 only with separate ignition point. |
| 21 | "Ignition With Fan", only useful with pure oil devices. |
| 22 | Staged operation only useful with pure oil devices. |
| 23 | 3-staged operation only works without ignition burner. |
| 24 | Permanent operation not allowed (Featureflag). |
| 25 | Fuel change not allowed (Featureflag). |
| 26 | Too many channels (Featureflag). |
| 27 | Staged oil burners need an air channel. |
| 28 | There is an invalid function configured for a channel (Parameter 400-404). |
| 30 | Multiple terminals defined for one signal, Terminal configuration invalid. |
| 31 | No output terminal for fan or transformer available. |
| 32 | Necessary outputs for operation with oil not available (Oil pump or oil valve). |
| 33 | Necessary outputs for operation with gas not available (gas valve). |
| 34 | An output terminal is needed for the ignition valve, but is not available in the actual terminal configuration. |
| 40 | No input terminal for the air pressure monitor available. |
| 41 | No input terminal for the oil safety chain available (oil pressure min will not be monitored directly, because it can be included in the safety chain). |
| 42 | No input terminal for the gas safety chain or minimum gas pressure available. |
| 43 | The feedback line for the fuel selection is not mapped, but is required. |
| 31 | No output terminal for fan or transformer available. |
| 32 | Necessary outputs for operation with oil not available (Oil pump or oil valve). |
| 33 | Necessary outputs for operation with gas not available (gas valve). |
| 34 | An output terminal is needed for the ignition valve, but is not available in the actual terminal configuration. |
| 40 | No input terminal for the air pressure monitor available. |
| 41 | No input terminal for the oil safety chain available (oil pressure min will not be monitored directly, because it can be included in the safety chain). |
| 42 | No input terminal for the gas safety chain or minimum gas pressure available. |
| 43 | The feedback line for the fuel selection is not mapped, but is required. |

# 6 ASSIGNMENT OF INTERNAL FAULT 999

| 0-1999 internal faults generated from within System API | | |
|---|---|---|
| D1 | D2 | Description |
| 10 | return value of m_PwrOn_uiInitAPI() | m_PwrOn_uiInitAPI() failed |
| 20 | 0 | CRC32 check of ROM failed |
| 21 | 0 | Cyclic CRC32 check of ROM during runtime failed |
| 22 | Erroneous State | State machine for CRC32 check during runtime ran into an invalid state |
| 40 | 0 | m_PwrOn_bLoadEEPROM() failed |
| 92 | Directive | ATTENTION, wrong number in the wrong module, signaled by hchactab if control tables are not correct |
| 200 | 0 | Last destination element is no member of sER.sP |
| 201 | 0 | Last destination element is no member of sER.sM |
| 202 | 0 | Last destination element is no member of sER.sC |
| 203 | 0 | Last destination element is no member of sER.sH |
| 204 | 0 | Destination is no member of sER.sX |
| 210 | sEECtrl.sChk.uiReadStartAddr | Refresh cycle timeout expired |
| 211 | sEECtrl.sChk.uiReadStartAddr | Uncorrectable error in EEPROM block |
| 212 | sEECtrl.eSeq_State | Invalid state |
| 215 | uiEEFaultAddr | Uncorrectable error in Parameter Set |
| 216 | uiEEFaultAddr | Uncorrectable error in Miscell-Data |
| 217 | uiEEFaultAddr | Uncorrectable error in Curve Set |
| 220 | 0 | pucDst == NULL |
| 222 | uiEEStartAddr | Invalid EEPROM address |
| 240 | uiEEStartAddr | Write beyond end of safety area! |
| 241 | uiEEStartAddr | Start address in safety area is no multiple of 3 |
| 242 | uiEEStartAddr | Write beyond end of non-safety area! |
| 243 | uiEEStartAddr | Start address is in reserved area! |
| 244 | ulReqFIFOSpace | Not enough FIFO space |
| 250 | (ulong32)pucDst | Readback error while refreshing - possibly defective RAM cell |
| 300 | 0 | Timout sICom.uiRxLiveTimer expired |
| 301 | 0 | Timout sICom.uiRxLiveTimer expired |
| 350 | 0 | Timeout sICom.uixLiveTimer expired |
| 360 | 0 | Timeout while waiting for the exit from DUAL_BEF_CHECK_PARAM |
| 361 | 0 | FIFO ful ! |
| 380 | uiBPP_HPPunktNr | Error while calling uiPutPunkt() |
| 381 | 0 | Seal control command in the presence of BM_FAT_KALTCHECK |
| 382 | 0 | Timeout in the cyclical parameter comparison |
| 383 | uiBCP_AnzParam[0] | DUAL_BEF_CHANGE_PARAM1: Invalid value in the reception buffer |
| 384 | uiBCP_AnzParam[1] | DUAL_BEF_CHANGE_PARAM2: Invalid value in the reception buffer |
| 385 | sRx.Buffer.ui[ucRxOK-1][uiSTART-BEF+47] | Cyclic parameter verification: different parameters between HP and UP! |
| 386 | uiParaIdx | PowerOn parameter verification: different parameters between HP and UP! |
| 410 | sIO.sIn.ulInputsN | Detected positive half-wave on terminal input! |
| 411 | input status received from UP | Different input status between controllers |
| 412 | 0 | The readback input of the fuel selection relais contacts in the dual fuel is invalid. DFM probably defect. |
| 420 | uil | Input status of digital input on HP and UP is inconsistent (>20ms) |
| 430 | ucPin2Test | Pin short circuit test detected an error!Currently tested pin not configurated as output or is stuck at 1 |

| | | |
|---|---|---|
| 431 | ucPin2Test | Pin short circuit test detected an error!Short-circuit between pins, pull-up of input stage defective or pin is externally stuck at 0 |
| 440 | 0 | sIO.sIn.uiTestSignalTimeout expired |
| 450 | 0 | Main power relay (K2) does not switch correctly to off when out of power. |
| 451 | ucRelay | Relay does not switch correctly, when relay power is enabled (for details see enum teRelais) |
| 460 | uiFaultParam | Failure of relais power switching or readback of relay coils of K1 or K2Param2: Bit 0 is set if readback line of K1 is erroneous, Bit 1 is set if readback line of K2 is erroneous |
| 461 | uiFaultParam | Readback status of relay K1 or K2 differs from desired switching status, relay propably defect.Param2:Bit 0: nominal state of K1Bit 1: nominal state of K2Bit 8: state of readback line of K1Bit 9: state of readback line of K2 |
| 500 | 0 | Timeout while waiting for end of write cycle |
| 501 | 0 | SLA+W has been transmitted; NO ACK has been received |
| 502 | 0 | SLA+R has been transmitted; NO ACK has been received |
| 503 | 0 | Data byte has been transmitted; NO ACK has been received |
| 504 | 0 | BUS error due to an illegal START or STOP condition |
| 505 | 0 | Arbitration lost in SLA+R/W or Data bytes |
| 510 | ulI2CStat | Unknown/invalid state! |
| 600 | sSRCtrl.uiOffset | Correction of defective triple in Safety RAM structure failed |
| 610 | (ulong32)pucDst | Invalid destination address |
| 620 | (ulong32)puiDst | Invalid destination address |
| 630 | (ulong32)pulDst | Invalid destination address |
| 700 | 0 | CPU selftest failed |
| 701 | sSelftest.sMngr.eState | state-event-machine failed with AC_ERR |
| 710 | sSelftest.sWD.eErrorState | Watchdog selftest failed |
| 711 | sSelftest.sWD.eState | Invalid default case |
| 720 | Selftest.sVM.ucTest2Perform | Invalid default case |
| 721 | Selftest.sVM.eErrorState | Supply voltage monitor selftest failed |
| 722 | Selftest.sVM.eState | Invalid default case |
| 730 | sSelftest.sRR.eErrorState | Relay release circuit selftest failed |
| 731 | sSelftest.sRR.eState | Invalid default case |
| 740 | sSelftest.sRPW.eErrorState | Relay PWR release circuit selftest failed |
| 741 | sSelftest.sRPW.eState | Invalid default case |
| 750 | 0: USR-Stack, 1: IRQ-Stack | Stack overflow detected |
| 751 | 0 | Stackaddress is NULL-Pointer |
| 752 | 0 | Stackaddress is NULL-Pointer |
| 800 | sWDog.ulReleasePtrn1 | Trigger release patterns are invalid! |
| 810 | eFeedIndex | Invalid Feed Index |
| 820 | eTriggerCtrl | Invalid Trigger Mode |
| 830 | 0 | No valid watchdog trigger received (frequency or duty cycle invalid) |
| 900 | uiErrorCode | Fault from LPC_API error handler |
| 920 | 0 | Invalid entry in iStoerResRam |
| 930 | uiMaskedFaultCode | uiMaskedFaultCode out of range! |
| 1200 | 0 | Flame signal doesn't disappear during self-test |
| 1210 | sIFD.eTestState | Invalid default case |
| 1220 | sIFD.uiClock | UP is missing test impulses |
| 1221 | sIFD.uiClock | Test signal duration too short |
| 1222 | sIFD.uiClock | Test signal duration too short |
| 1240 | 0 | Detected short circuit of LDR |
| 1250 | uiADValue | Circuit selftest failed, A/D value out of expected range |
| 1260 | sLDR.eTestState | Invalid default case |
| 1270 | sLDR.uiClock | Test interval too long |
| 1271 | sLDR.uiClock | HP released test pin too late |
| 1272 | sLDR.uiClock | HP released test pin too early |

| | | |
|---|---|---|
| 1290 | uiMyFlames XOR uiPartnerFlames | Flame signals on both controllers are inconsistent (bit 0: main flame, bit 1: ignition flame) |
| 1300 | 0 | Pointer to transmit buffer is NULL |
| 1400 | psActuator->ucSANumber | H_SA_INTERFACE_INVALID_ACTUATOR_TYPE |
| 1401 | psActuator->ucSANumber | H_SA_INTERFACE_INVALID_DIRECTION |
| 1405 | 0 | H_SA_INTERFACE_WRONG_RAMP_CALCULATION |
| 1406 | 0 | ulGradientMax <= ulGradientDesired |
| 1410 | 0 | H_SA_INTERFACE_WRONG_RAMP_CALCULATION |
| 1411 | 0 | H_SA_INTERFACE_ERROR_TIMING |
| 1415 | psActuator->ucSANumber | psActuator->ucSANumber Invalid! |
| 1416 | psActuator->ucSANumber | psActuator->ucSANumber Invalid! |
| 1420 | psActuator->ucSANumber | H_SA_INTERFACE_WRONG_RAMP_CALCULATION |
| 1430 | psActuator->ucSANumber | H_SA_FEEDBACK_WRONG_FEEDBACK |
| 1435 | psActuator->ucSANumber | H_SA_PLAUSIB_ACTUATOR_OUT_OF_RANGE |
| 1436 | psActuator->ucSANumber | H_SA_PLAUSIB_SECTION_COUNT_OUT_OF_RANGE |
| 1440 | psActuator->ucSANumber | H_SA_REFERENCE_SEARCH_NO_REFERENCE_FOUND |
| 1450 | psActuator->ucSANumber | H_SA_STEPCALC_CALL_COUNT_OVERFLOW |
| 1451 | psActuator->ucSANumber | H_SA_STEPCALC_SECTIONCOUNT_OUT_OF_RANGE |
| 1452 | psActuator->ucSANumber | H_SA_STEPCALC_INVALID_DIRECTION |
| 1453 | psActuator->ucSANumber | H_SA_STEPCALC_SECTIONCOUNT_OUT_OF_RANGE |
| 1454 | psActuator->ucSANumber | H_SA_STEPCALC_INVALID_DIRECTION |
| 1455 | psActuator->ucSANumber | H_SA_STEPCALC_WRONG_STATUS |
| 1460 | 0 | U_SA_INTERFACE_INVALID_ACTUATOR_TYPE |
| 1461 | 0 | U_SA_INTERFACE_INVALID_DIRECTION |
| 1470 | psActuator->ucSANumber | U_SA_FEEDBACK_INVALID_DIRECTION |
| 1471 | psActuator->ucSANumber | U_SA_FEEDBACK_INVALID_DIRECTION |
| 1472 | psActuator->ucSANumber | U_SA_FEEDBACK_WRONG_FEEDBACK |
| 1480 | psActuator->ucSANumber | U_SA_REFERENCE_SEARCH_INVALID_ACTUATOR_TYPE |
| 1490 | psActuator->ucSANumber | psActuator->ucSANumber Invalid! |
| 1500 | 0 | Timeout while sending ICOM command |
| 1501 | 0 | Timeout while waiting for ACK of ICOM command |
| 1502 | 0 | Timeout while waiting for end of actuator initilization |
| 1503 | 0 | Timeout while waiting for end of actuator initilization |
| 1504 | 0 | Timeout while waiting for end of actuator initilization |
| 1505 | Actuator Number | HP: Invalid configuration. Parameter for Actuator Type should never be different from 1 or 2 |
| 1505 | Actuator Number | ÜP: Invalid configuration. Parameter for Actuator Type should never be different from 1 or 2 |
| 1490 | psActuator->ucSANumber | psActuator->ucSANumber Invalid! |
| 1500 | 0 | Timeout while sending ICOM command |
| 1501 | 0 | Timeout while waiting for ACK of ICOM command |
| 1502 | 0 | Timeout while waiting for end of actuator initilization |
| 1503 | 0 | Timeout while waiting for end of actuator initilization |

| **2000-3999 internal faults generated from within Application (FAT and System)** | | |
|---|---|---|
| D1 | D2 | Description |
| 2000 | | unknwoen event, for the event handling mechanism |
| 2001 | | too many events for even queue |
| 2100 | | Invalid buffer input |
| 2101 | | EEProm probably defective |
| 2200 | | Invalid Index for SQBLData00 |
| 2201 | | Invalid Index for SQBLData01 |
| 2202 | | Invalid Index for SQBLData02 |
| 2203 | | Invalid Index for SQBLData03 |
| 2204 | | Invalid Index for SQBLData04 |
| 2205 | | Invalid Index for SQBLData05 |
| 2206 | | Invalid Index for SQBLDataKurven |
| 2207 | | Invalid Index for SQBLDataPara |
| 2208 | | Invalid Index for SQBLData15 |

| | | |
|---|---|---|
| 2209 | | Data request for data block, but no transmission. |
| 2300 | | Invalid state |
| 2301 | | Invalid state |
| 2302 | | Deleting curve,  end of EI |
| 2303 | | Invalid state |
| 2304 | | Invalid state |
| 2305 | | Invalid parameter number (does not exist) |
| 2306 | | Invalid state (cold check) |
| 2307 | | Cold check |
| 2308 | | Cold check |
| 2309 | | Cold check |
| 2310 | | Invalid state |
| 2350 - | | Cold check |
| 2354 | | Attempt to write to a modbus register |
| 2400 | | Modbus register described |
| 2401 | | Parameter with access level  > 4 |
| 2500 | | Does not find the operating mode |
| 2600 | | Transfer forbidden |
| 2601 | | Deleting curve, left EI |
| 2700 | | The air pressure was not droped but the burner still starts |
| 2800 | | It was opened more than one valve in the cold check |
| 2801 | | Maintenance mode on the main controller is active, but there is no mainte- |
| 2802 | | nance mode parameterized |
| 2803 | | Maintenance mode active but it is still ignite |
| 2804 | | Burner starts, while the supervisor controller is blocked |
| | | |
| 2805 | | Burner starts, while no reference test was made |
| 2806 | | The stage sent by HP for the staged-operation does not seem plausible |
| 2900 | | Program load by the timer to high |
| 3000 | | All errors, for which no error number was registered |
| 3100 | | Error message of a password module |
| 3101 | | Error message of the password module |
| 3200 | | Internal overflow, intermediate result does not fit in the variable |
| 3201 | | Overflow of the end result |
| 3230 | | UP Version differs from HP version |
| 3250 | | Invalid parameter for staged burner-firing-rate controller |
| 3300 | | Sequence control BrennUm default case entered |
| 3301 | | Sequence control leakage test default case entered |
| 3302 | | Sequence control FAT default case |
| 3303 | | Sequence control post ventilation default case |
| 3304 | | Sequence control pre ventilation default case entered |
| 3305 | | Sequence control Ingnition default case entered |
| 2900 | | Program load by the timer to high |
| 3000 | | All errors, for which no error number was registered |
| 3100 | | Error message of a password module |
| 3101 | | Error message of the password module |
| 3200 | | Internal overflow, intermediate result does not fit in the variable |
| 3201 | | Overflow of the end result |
| 3230 | | UP Version differs from HP version |
| 3250 | | Invalid parameter for staged burner-firing-rate controller |
| 3300 | | Sequence control BrennUm default case entered |
| 3301 | | Sequence control leakage test default case entered |
| 3302 | | Sequence control FAT default case |
| 3303 | | Sequence control post ventilation default case |

| | | |
|---|---|---|
| 3304 | | Sequence control pre ventilation default case entered |
| 3305 | | Sequence control Ingnition default case entered |

| **4000-4999 Internal faults generated from within Application (Fuel/Air Ratio Control)** | | |
|---|---|---|
| D1 | D2 | Description |
| 4000 | 0 | No curve point to the load of the ignition point |
| 4001 | 0 | ucPIdx_R >= ucPunktAnzahl |
| 4100 | sRampe.ucState | invalid value of sRampe.ucState |
| 4200 | ucVBMode | invalid value of ucVBMode |
| 4302 | 0 | No active air channel is defined (parameterization error) |
| 4400 | ucSteuerArtEx | invalid value of ucSteuerArtEx |
| 4401 | 0 | timeout while waiting for ??? |
| 4402 | ucSteuerArtEx | invalid value of ucSteuerArtEx |
| 4403 | ucKanStat | (ucKanStat & Def_VKM2_MSK) != Def_VKM2_DVAL |
| 4404 | 0 | timeout while waiting for ??? |
| 4405 | ucKanStat | disabled channel is moving! |
| 4406 | ucRzStState[ucKnr] | invalid value of ucRzStState[ucKnr] |
| 4407 | ucVBStat | invalid value of ucVBStatn |
| 4500 | 0 | sRampe.uiLaufzeit == 0! |
| 4501 | ucKnr | IfKM_VB() returned 0 |
| 4600 | ucVorgabe | invalid value of ucVorgabe |
| 4601 | (sRampe.uc2VBKMsk sRampe.ucVBKMsk) | No VB channels can be active in VSM_NOVB |
| 4602 | sRampT.ucNState | Unknown default state |
| 4603 | sRampe.ucState | invalid value of sRampe.ucState |
| 4700 | 0 | Ramp time expired! |
| 4701 | | Transferred channel number out of the permitted range |
| 4702 | | Transferred channel number out of the permitted range |
| 4703 | | Transferred channel number out of the permitted range |
| 4704 | | Transferred channel number out of the permitted range |
| 4705 | ucKnr | Transferred channel number out of the permitted range |
| 4706 | ucKnr | Transferred channel number out of the permitted range |
| 4707 | ucKnr | Transferred channel number out of the permitted range |
| 4708 | ucKnr | Transferred channel number out of the permitted range |
| 4709 | ucKnr | Transferred channel number out of the permitted range |
| 4710 | ucKnr | Transferred channel number out of the permitted range |
| 4711 | ucKnr | Transferred channel number out of the permitted range |
| 4712 | ucKnr | Transferred channel number out of the permitted range |
| 4713 | ucKnr | Transferred channel number out of the permitted range |
| 4714 | ucKnr | Transferred channel number out of the permitted range |
| 4715 | ucKnr | Transferred channel number out of the permitted range |
| 4716 | ucKnr | Transferred channel number out of the permitted range |
| 4717 | ucKnr | Transferred channel number out of the permitted range |
| 4800 | uiActTmr | ucErg > 0! |
| 4801 | ucSgIdx | Parameter modification Knf_uiActuatorDirX while fuel/air ratio control is active or outside the operation modes “Burner Off” or “Fault” |
| 4802 | 0 | Allowed scope for the channel too small to assess the maximum speed |
| 4900 | ucKnr | Division by 0 |

| **5000-5999 Internal faults generated from within Application (firing-rate control)** | | |
|---|---|---|
| D1 | D2 | Description |
| 5000 | enInterneLastSeq | invalid value of enInterneLastSeq |
| 5001 | 0 | Ambiguous DPS+ / DPS- for load stage selection |
| 5002 | 0 | Curve error: curve for n-staged oil or channel speed for actuators was not determined |
| 5003 | 0 | Invalid parameter in function call |

| | | |
|---|---|---|
| 5004 | 0 | Timers for the control of the stage switching time do not fit together: Switch-ing time of internal load < supervised time for set load |
| 5005 | 0 | Invalid stage curve with internal load set by the stage controller |
| 5007 | 0 | Invalid load value while adjusting the staged oil curve |
| 5008 | 0 | Invalid stage- activation control mode |

| **6000-6999 Internal faults generated from within UP Application-Control (Fuel/Air Ratio Control)** | | |
|---|---|---|
| D1 | D2 | Description |
| 6000 | ucSteuerArtEx | unknown Mode of Channel-Control |
| 6001 | ucBetrMoNr | Overadressing of Array was detected |
| 6100 | ucKnr | unknown Mode of Channel-Control |
| 6200 | 0 | Avoid an endless loop |
| 6201 | 0 | Avoid an endless loop |
| 6202 | 0 | Avoid an endless loop |
| 6203 | 0 | SSR.sS0.ucAkt SSR.sS0.uiKanalenb changed without AufrufKurve2Workram |
| 6204 | 0 | No completely valid point found but curve not empty |
| 6205 | Detected points No. | number of points don't match Ram-curve (fatal error with task) |
| 6206 | Operating curve points index | Writing firing-rate failed (Ram-error) |
| 6207 | Original curve points index | firing-rate point in original curve invalid |
| 6208 | Original curve points index | invalid point index |
| 6209 | 0 | Point-approximation not possible, no prior point |
| 6210 | 0 | Point-approximation not possible, no following point |
| 6211 | 0 | Point-approximation failed, invalid according point |
| 6212 | Operating curve points index | Writing setpoint failed (Ram-error) |
| 6213 | Original curve points index | invalid point-index |
| 6214 | 0 | Point-approximation not possible, no prior point |
| 6215 | 0 | Point-approximation not possible, no following point |
| 6216 | 0 | Point-approximation failed, invalid according point |
| 6217 | Operating curve points index | Return setpoint writing failed (Ram-error) |
| 6218 | Original curve points index | invalid point-index |
| 6219 | 0 | Point-approximation failed, invalid according point |
| 6220 | Operating curve points index | Evaluated-Correction-Setpoint-Writing failed (Ram-error) |
| 6221 | Original curve points index | invalid point-index |
| 6222 | 0 | Writing failed: Ram-error |
| 6223 | 0 | Writing failed: Ram-error |
| 6224 | Error No. | Too many differences between curves (sliding counter, substract 1 per cycle) |
| 6225 | Status No. | undefined state of statemachine |
| 6300 | ucSMState | Detect undefined State of Statemachine |
| 6400 | ucKnr | Division by 0 |

# 7 SETTING THE BURNER CURVE

| | |
|---|---|
| Initial home page: keep thermostat open. Burner remain in stand-by |  |
| Unlock the controller: press ENTER |  |
| Info<br>Manual<br>Setting | 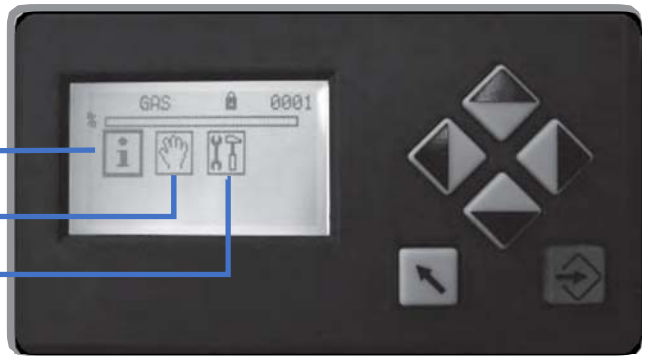 |
| Press the right key to position on the Settings icon (indicated with wrench and hammer) |  |
| Press ENTER |  |

| | |
|---|---|
| Press ENTER again after selecting 'the key icon '. |  |
| Keep the password “0000“ and confirm with ENTER. |  |
| New page, level 1 unlocked |  |
| Right click to EDIT. |  |
| Press ENTER to enter the “curves page”. |  |

| | |
|---|---|
| Air & gas position at burner's ignition<br>1 ignition position,<br>2 air servomotor position (digit)<br>3 gas servomotor position (digit)<br><br>VALUES VARY FROM BURNER TO BURNER |  |
| Close the thermostat the burner starts. |  |
| Pre-purge. |  |
| The controller moves the servomotors to the ignition position and excites the ignition transformer. |  |
| If the burner starts with those settings, this page will appear:<br>If the burner does not start with those settings the chapter "SETTING THE IGNITION POINT WITH BURNER IN STAND-BY" |  |

# 8 SETTING THE IGNITION POINT WITH BURNER IN STAND-BY

| | |
|---|---|
| In case of troubles, the burner will go on lock-out mode and the reason will be indicated on the display. |  |
| Check the lock code & press ENTER to unlock. |  |
| Press ENTER to modify the positions (burner in stand-by). |  |
| Click up to increase the gas opening position or down to decrease it. |  |
| Right click to move from gas servomotor adjustment to air servomotor adjustment. |  |

| | |
|---|---|
| Clickup to increase the air opening position or down to decrease it. |  |
| Press ENTER to save the new settings.<br><br>**CLOSE THE THERMOSTAT LINE** |  |
| | |

# 9 SETTING WITH BURNER ON

| | |
|---|---|
| Check the combustion quality (with a flue gas analyzer). To modify the combustion valves and adjust servomotors position (gas and air), press ENTER. |  |
| Click up to increase the gas opening position or down to decrease it. |  |
| Right click to move from gas servomotor adjustment to air servomotor adjustment. |  |
| Click up to increase the air opening position or down to decrease it. |  |
| Press ENTER to save the new settings. |  |

| | |
|---|---|
| Click up to quit the ignition position. |  |
| Check the combustion quality in all positions (from minimum to maximum output) and adjust the gas and air setting if necessary (as indicated on chapter “SETTING THE IGNITION POINT WITH BURNER IN STAND-BY”). |  |
| Set the maximum load position 999, according to the maximum output required by the boiler. If necessary, set the inlet gas pressure (at the exit of the gas pressure reducer). Check the output combustible and the quality of combustion in all positions and adjust gas and air if necessary (see chapter “SETTING THE IGNITION POINT WITH BURNER IN STAND-BY”). |  |
| Press EXIT to quit the combustion settings. |  |
| Press EXIT again to quit main menu. |  |

| | |
|---|---|
| Press EXIT again to quit settings. |  |
| The burner runs now in automatic mode. |  |
| In case of troubles, the burner will go on lock-out mode and the reason will be indicated on the display.<br>Exemple:<br>H009 – lock-out code<br>D1 - diagnostic 1<br>D2 - diagnostic 2<br>xxh - operation hours |  |
| Check the lock code & press ENTER to unlock. |  |

If the ignition setting is not good enough (e.g. too much air), the burner cannot start. In that case adjust again the ignition point see chapter “SETTING THE BURNER CURVE”.
Otherwise make sure that no other reason may cause the ignition failure.

# 8 SETTING OF A NEW CURVE WITH VSD (OPTIONAL)

**With VSD modify the curve points only with burner on.**

| | |
|---|---|
| With burner on STANDBY, press Enter |  |
| With the arrows<br>go on the icon<br>press Enter | 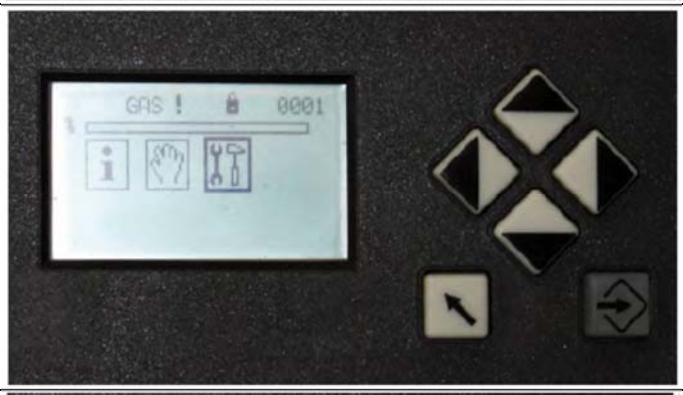 |
| With the arrows<br>go on the icon<br>press Enter |  |
| Check the password 0000<br>press Enter to confirm |  |

| | |
|---|---|
| With the arrows  <br>go on the icon  <br>press Enter  |  |
| press Enter  to cancel the curve |  |
| press Enter  to confirm curve cancellation |  |
| Now the working curve has been cancelled<br>press Enter  | 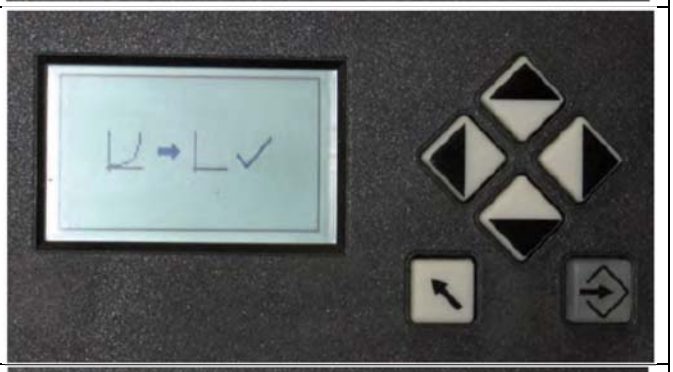 |
| press Exit  |  |

| | |
|---|---|
| With the arrows  <br><br>go on the icon  <br><br>press Enter  |  |
| Close the “thermostat line” |  |
| The burner carries out the pre-purge |  |
| The burner reaches the ignition point | 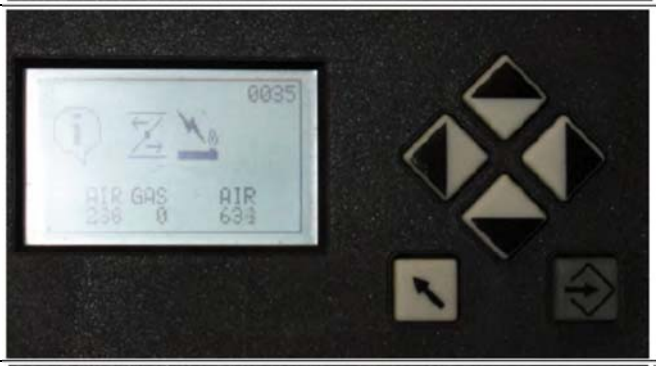 |
| Wait for the air/gas servomotors to reach 0 degrees<br>The VSD is set at 30 Hz<br><br>press Enter  |  |

| | |
|---|---|
| press Enter  <br><br>and set the ignition point using the arrows  |  |
| Set the values and press Enter  |  |
| press Enter  to confir the ignition point .<br><br>the burner discharges and opens the valves. | 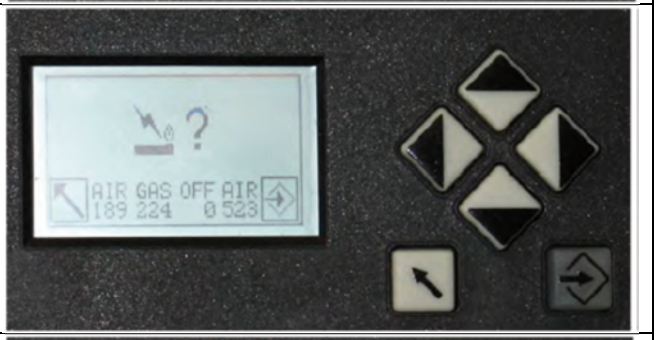 |
| With burner on, check the combustion with a combustion analyser.<br><br>Modify using the arrows  and press Enter  to store. |  |
| Press  to move onto the (minimum burner) load 200<br><br>Press Enter  |  |

| | | |
|---|---|---|
| Press  to set the minimum burner output<br><br>press Enter  to confirm | |  |
| Press  to move onto the maximum load 999<br><br>press Enter  | | 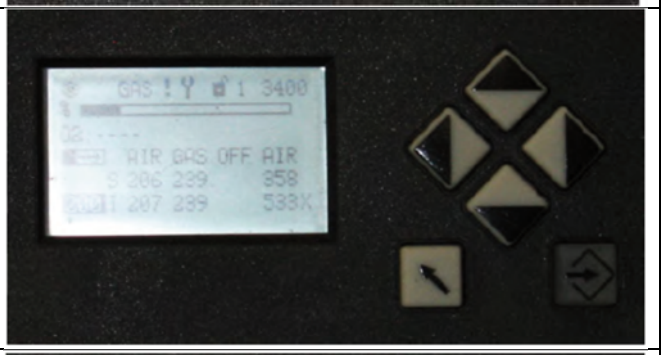 |
| Press  to set the maximum burner output<br><br>Press Enter  to confirm | |  |
| Check the combustion in all curve points (800-700-600-500-400-300-250) as in previous the points.<br><br>Once the adjustment is done,<br><br>press  three times | |  |