LG/NG/NGX120
LG/NG140
LG/NG/NGX200

Idea Series
Gas burners

MANUAL OF INSTALLATION - USE - MAINTENANCE

CIB UNIGAS

BURNERS - BRUCIATORI - BRULERS - BRENNER - QUEMADORES - ГОРЕЛКИ

M039155CD Rel. 3.3 11/2019

TABLE OF CONTENTS

WARNINGS **3**

PART I: INSTALLATION **5**
GENERAL FEATURES 5
How to interpret the burner's "Performance curve" *6*
Checking the proper gas train size *6*
Specifications *7*
Low NOx burners *10*
Country and usefulness gas categories *10*
Overall dimensions *11*
Performance curves *12*
Pressure/rate in the network curves *13*
Low NOx gas burners *14*
MOUNTINGS AND CONNECTIONS 15
Fitting the burner to the boiler *15*
Matching the burner to the boiler *15*
Installing the gas train *17*
Electrical connections *17*
Power supply without neutral 20
ADJUSTING THE AIR AND GAS FLOW RATES 21
Combustion head pressure curves vs. the gas flow rate *21*
Measuring the gas pressure in the combustion head *21*
Pressure in combustion head - gas flow rate curves *22*
SETTING GAS AND AIR FLOW RATE *23*
Startup Output *23*
Adjustments - brief description *23*
Adjustment procedure *24*
Single stage burners *25*
Double stage, progressive and fully-modulating burners *25*
Fully modulating burners *25*
Adjusting the gas valves group fo single-stage and double-stage burners *26*
Progressive, fully-modulating burner adjustments *27*
Gas Proving System VPS504 (Option) *28*
Adjusting the air and gas pressure switches *29*
Adjusting the air pressure switch *29*
Calibration of minimum gas pressure switch *29*

PART II: OPERATION **30**
OPERATION 30

PART III: MAINTENANCE **31**
ROUTINE MAINTENANCE 31
Removing the filter in the MULTIBLOC DUNGS MB-DLE 405..412 ..... *31*
Removing the filter in theMULTIBLOC DUNGS MB-DLE 415 - 420 ..... *32*
Cleaning or replacing the Krom-Scroeder CG2 25 V valve filter *32*
Disassembling the burner plate to service the burner fan *33*
Removing the combustion head *33*
Correct electrodes positioning *34*
Checking the detection current *35*
Seasonal stop *35*
Burner disposal *35*
TROUBLESHOOTING 36
SPARE PARTS 37
BURNER EXPLODED VIEW 38
WIRING DIAGRAMS 42

APPENDIX

DANGERS, WARNINGS AND NOTES OF CAUTION

This manual is supplied as an integral and essential part of the product and must be delivered to the user.

Information included in this section are dedicated both to the user and to personnel following product installation and maintenance.

The user will find further information about operating and use restrictions, in the second section of this manual. we highly recommend to read it.

Carefully keep this manual for future reference.

The following:

- Entails the customer's acknowledgement and acceptance of the company's general terms and conditions of sale, in force at the date of order confirmation and available in the appendix to the current price lists.
- Is intended exclusively for specialised, experienced and trained users able to operate in conditions that are safe for people, the device and the environment, and in full compliance with the requirements set out on the following pages and with current health and safety regulations.

Information regarding assembly/installation, maintenance, replacement and repair is always and exclusively intended for (and therefore only to be carried out by) specialised personnel and/or directly by the Authorised Technical Service

IMPORTANT :

The supply has been made at the best conditions on the basis of the customer's order and technical indications concerning the state of the places and the installation systems, as well as the need to prepare certain certifications and / or additional adaptations with respect to the standard observed and transmitted for each product. In this respect, the manufacturer declines any responsibility for complaints, malfunctions, criticalities, damages and/or anything else consequent to incomplete, inaccurate and/or missing information, as well as failure to comply with the technical requirements and installation regulations, initial start-up, operational management and maintenance.

For proper operation of the device, it is necessary to ensure the readability and conservation of the manual, also for future reference. In case of deterioration or more simply for reasons of technical and operational insight, contact the manufacturer directly. Text, descriptions, images, examples and anything else contained in this document are the exclusive property of the manufacturer. Any reproduction is prohibited.

RISK ANALYSIS

Instruction manual delivered with the device:

This is an integral and essential part of the product and must not be separated from it. It must therefore be kept carefully for any necessary consultation and must accompany the burner even if it is transferred to another owner or user, or to another system. In the event of damage or loss, another copy must be requested from the local customer service centre;

Delivery of the system and instruction manual

.

The supplier of the system is obliged to accurately inform the user about:– Use of the system;

– any further testing that may be necessary before activating the system;

– maintenance and the requirement to have the system checked at least once a year by a contractor or other specialised technician.

To ensure periodic monitoring, the manufacturer recommends drawing up a Maintenance Agreement.

WARRANTY AND LIABILITY

In particular, warranty and liability claims will no longer be valid in the event of damage to persons and/or property if such damage is due to any of the following causes:

- Incorrect installation, start-up, use and maintenance of the burner;
- Improper, incorrect or unreasonable use of the burner;
- Operation by unqualified personnel;
- Carrying out of unauthorised changes to the device;
- Use of the burner with safety devices that are faulty, incorrectly applied and/or not working;
- Installation of untested supplementary components on the burner;
- Powering of the burner with unsuitable fuels;
- Faults in the fuel supply system;
- Use of the burner even after an error and/or fault has occurred;
- Repairs and/or overhauls incorrectly carried out;
- Modification of the combustion chamber with inserts that prevent the regular development of the structurally established flame;
- Insufficient and inappropriate supervision and care of the burner components most subject to wear and tear;
- Use of non-original components, whether spare parts, kits, accessories and optionals;
- Force majeure.

Furthermore, the manufacturer declines all responsibility for non-compliance with this manual.

WARNING! Failure to comply with this manual, operational negligence, incorrect installation and unauthorised modifications will result in the manufacturer's warranty for the burner being voided.

Personnel training

The user is the person, organisation or company that has acquired the appliance and intends to use it for the specific purpose. The user is responsible for the appliance and for training the personnel that operate it.

The user:

- Undertakes to entrust the machine to suitably trained and qualified personnel;
- Must take all measures necessary to prevent unauthorised people gaining access to the appliance;
- Undertakes to adequately inform personnel about application and observance of the safety requirements, and therefore ensure that they are familiar with the operating instructions and safety requirements;
- Must inform the manufacturer if any faults or malfunctions of the accident prevention systems occur, and if there is any suspected danger;
- Personnel must always use the personal protective equipment required by law and follow the instructions provided in this manual;
- Personnel must observe all danger and caution notices on the appliance;
- Personnel must not carry out, on their own initiative, operations or interventions outside their area of expertise;
- Personnel must inform their superiors of any problem and danger that may arise;
- The assembly of parts of other makes, or any modifications made, may alter the characteristics of the appliance and may therefore compromise operational safety. The manufacturer therefore declines all responsibility for damages arising from the use of non-original parts.

GENERAL INTRODUCTION

- The equipment must be installed in compliance with the regulations in force, following the manufacturer's instructions, by qualified personnel.
- Qualified personnel means those having technical knowledge in the field of components for civil or industrial heating systems, sanitary hot water generation and particularly service centres authorised by the manufacturer.
- Improper installation may cause injury to people and animals, or damage to property, for which the manufacturer cannot be held liable.
- Remove all packaging material and inspect the equipment for integrity.

In case of any doubt, do not use the unit - contact the supplier.

The packaging materials (wooden crate, nails, fastening devices, plastic bags, foamed polystyrene, etc), should not be left within the reach of children, as they may prove harmful.

- Before any cleaning or servicing operation, disconnect the unit from the mains by turning the master switch OFF, and/or through the cutout devices that are provided.
- Make sure that inlet or exhaust grilles are unobstructed.
- In case of breakdown and/or defective unit operation, disconnect the unit. Make no attempt to repair the unit or take any direct action.

Contact qualified personnel only.

Units shall be repaired exclusively by a servicing centre, duly authorised by the manufacturer, with original spare parts and accessories.

Failure to comply with the above instructions is likely to impair the unit's safety.

To ensure equipment efficiency and proper operation, it is essential that maintenance operations are performed by qualified personnel at regular intervals, following the manufacturer's instructions.

- When a decision is made to discontinue the use of the equipment, those parts likely to constitute sources of danger shall be made harmless.
- In case the equipment is to be sold or transferred to another user, or in case the original user should move and leave the unit behind, make sure that these instructions accompany the equipment at all times so that they can be consulted by the new owner and/or the installer.
- This unit shall be employed exclusively for the use for which it is meant. Any other use shall be considered as improper and, therefore, dangerous.

The manufacturer shall not be held liable, by agreement or otherwise, for WARNING! Failure to observe the information given in this manual, operating negligence, incorrect installation and carrying out of non authorised modifications will result in the annulment by the manufacturer of the guarantee that it supplies with the burner.

The damages resulting from improper installation, use and failure to comply with the instructions supplied by the manufacturer.The occurrence of any of the following circustances may cause explosions, polluting unburnt gases (example: carbon monoxide CO), burns, serious harm to people, animals and things:

- Failure to comply with one of the WARNINGS in this chapter
- Incorrect handling, installation, adjustment or maintenance of the burner
- Incorrect use of the burner or incorrect use of its parts or optional supply

SPECIAL INSTRUCTIONS FOR BURNERS

a Make the following checks:

- • the burner should be installed in a suitable room, with ventilation openings complying with the requirements of the regulations in force, and sufficient for good combustion;
- • only burners designed according to the regulations in force should be used;
- • this burner should be employed exclusively for the use for which it was designed;
- • before connecting the burner, make sure that the unit rating is the same as delivery mains (electricity, gas oil, or other fuel);
- • observe caution with hot burner components. These are, usually, near to the flame and the fuel pre-heating system, they become hot during the unit operation and will remain hot for some time after the burner has stopped.

When the decision is made to discontinue the use of the burner, the user shall have qualified personnel carry out the following operations:

a • remove the power supply by disconnecting the power cord from the mains;

b • disconnect the fuel supply by means of the hand-operated shutoff valve and remove the control handwheels from their spindles.

Special warnings

- Make sure that the burner has, on installation, been firmly secured to the appliance, so that the flame is generated inside the appliance firebox.
- Before the burner is started and, thereafter, at least once a year, have qualified personnel perform the following operations:
  - a set the burner fuel flow rate depending on the heat input of the appliance;
  - b set the flow rate of the combustion-supporting air to obtain a combustion efficiency level at least equal to the lower level required by the regulations in force;
  - c check the unit operation for proper combustion, to avoid any harmful or polluting unburnt gases in excess of the limits permitted by the regulations in force;
  - d make sure that control and safety devices are operating properly;
  - e make sure that exhaust ducts intended to discharge the products of combustion are operating properly;
  - f on completion of setting and adjustment operations, make sure that all mechanical locking devices of controls have been duly tightened;
  - g make sure that a copy of the burner use and maintenance instructions is available in the boiler room.
- In case of a burner shut-down, reser the control box by means of the RESET pushbutton. If a second shut-down takes place, call the Technical Service, without trying to RESET further.
- The unit shall be operated and serviced by qualified personnel only, in compliance with the regulations in force.

GENERAL INSTRUCTIONS DEPENDING ON FUEL USED

ELECTRICAL CONNECTION

- For safety reasons the unit must be efficiently earthed and installed as required by current safety regulations.
- It is vital that all saftey requirements are met. In case of any doubt, ask for an accurate inspection of electrics by qualified personnel, since the manufacturer cannot be held liable for damages that may be caused by failure to correctly earth the equipment.
- Qualified personnel must inspect the system to make sure that it is adequate to take the maximum power used by the equipment shown on the equipment rating plate. In particular, make sure that the system cable cross section is adequate for the power absorbed by the unit.
- No adaptors, multiple outlet sockets and/or extension cables are permitted to connect the unit to the electric mains.
- An omnipolar switch shall be provided for connection to mains, as required by the current safety regulations.
- The use of any power-operated component implies observance of a few basic rules, for example:
  - do not touch the unit with wet or damp parts of the body and/or with bare feet;
  - do not pull electric cables;
  - do not leave the equipment exposed to weather (rain, sun, etc.) unless expressly required to do so;
  - do not allow children or inexperienced persons to use equipment;
- The unit input cable shall not be replaced by the user. In case of damage to the cable, switch off the unit and contact qualified personnel to replace.

When the unit is out of use for some time the electric switch supplying all the power-driven components in the system should be switched off.

FIRING WITH GAS, LIGHT OIL OR OTHER FUELS GENERAL

General Warnings

- The burner shall be installed by qualified personnel and in compliance with regulations and provisions in force; wrong installation can cause injuries to people and animals, or damage to property, for which the manufacturer cannot be held liable.
- Before installation, it is recommended that all the fuel supply system pipes be carefully cleaned inside, to remove foreign matter that might impair the burner operation.
- Before the burner is commissioned, qualified personnel should inspect the following:
  - a the fuel supply system, for proper sealing;
  - b the fuel flow rate, to make sure that it has been set based on the firing rate required of the burner;
  - c the burner firing system, to make sure that it is supplied for the designed fuel type;
  - d the fuel supply pressure, to make sure that it is included in the range shown on the rating plate;
  - e the fuel supply system, to make sure that the system dimensions are adequate to the burner firing rate, and that the system is equipped with all the safety and control devices required by the regulations in force.
- When the burner is to remain idle for some time, the fuel supply tap or taps should be closed.

Special instructions for using gas

Have qualified personnel inspect the installation to ensure that:

- a the gas delivery line and train are in compliance with the regulations and provisions in force;
- b all gas connections are tight;
- c the boiler room ventilation openings are such that they ensure the air supply flow required by the current regulations, and in any case are sufficient for proper combustion.

- Do not use gas pipes to earth electrical equipment.
- Never leave the burner connected when not in use. Always shut the gas valve off.
- In case of prolonged absence of the user, the main gas delivery valve to the burner should be shut off.

Precautions if you can smell gas

a do not operate electric switches, the telephone, or any other item

likely to generate sparks;

b immediately open doors and windows to create an air flow to purge the room;

c close the gas valves;

d contact qualified personnel.

- Do not obstruct the ventilation openings of the room where gas appliances are installed, to avoid dangerous conditions such as the development of toxic or explosive mixtures.

Using oil pressure gauges

Generally, pressure gauges are equipped with a manual valve. Open the valve only to take the reading and close it immediately afterwards.

Safety and prevention

- Opening or tampering with the burner components is not allowed, apart from the parts requiring maintenance.
- Only those parts envisaged by the manufacturer can be replaced.

SYMBOLS USED

	WARNING	Failure to observe the warning may result in irreparable damage (electrical or meccanichal source respectively) to the unit or damage to the environment
	DANGER!	Failure to observe the warning may result in serious injuries or death (electrical or meccanichal source respectively).
	NOTE	This symbol distinguishes warnings of an annotative, reminder, general nature

BURNER SAFETY

The burners- and the configurations described below - comply with the regulations in force regarding health, safety and the environment. For more in-depth information, refer to the declarations of conformity that are an integral part of this Manual.

.

DANGER! Incorrect motor rotation can seriously damage property and injure people.

.Do not touch any mechanical moving parts with your hands or any other part of your body. Injury hazard

Do not touch any parts containing fuel (i.e. tank and pipes). Scalding hazard

Do not use the burner in situations other than the ones provided for in the data plate.

Do not use fuels other than the ones stated.

Do not use the burner in potentially explosive environments.

Do not remove or by-pass any machine safety devices.

Do not remove any protection devices or open the burner or any other component while the burner is running.

Do not disconnect any part of the burner or its components while the burner is running.

Untrained staff must not modify any linkages.

- After any maintenance, it is important to restore the protection devices before restarting the machine.
- All safety devices must be kept in perfect working order.
- Personnel authorized to maintain the machine must always be provided with suitable protections.

ATTENTION: while running, the parts of the burner near the generator (coupling flange) are subject to overheating. Where necessary, avoid any contact risks by wearing suitable PPE.

DIRECTIVES AND STANDARDS

Gas burners

European directives

2016/426/UE (appliances burning gaseous fuels)
2014/35/UE (Low Tension Directive)
2014/30/UE (Electromagnetic compatibility Directive)
2006/42/CE (Machinery Directive)

Harmonized standards

UNI EN 676 (Automatic forced draught burners for gaseous fuels)
EN 55014-1 (Electromagnetic compatibility- Requirements for house hold appliances, electric tools and similar apparatus)
EN 60204-1:2006 (Safety of machinery – Electrical equipment of machines.)
CEI EN 60335-1 (Specification for safety of household and similar electrical appliances);
CEI EN 60335-2-102 (Household and similar electrical appliances. Safety. Particular requirements for gas, oil and solid-fuel burning appliances having electrical connections).
UNI EN ISO 12100:2010 (Safety of machinery - General principles for design - Risk assessment and risk reduction);

Industrial burners

European directives

2006/42/CE (Machinery Directive)
2014/35/UE (Low Tension Directive)
2014/30/UE (Electromagnetic compatibility Directive)
2006/42/CE (Machinery Directive)

Harmonized standards

EN 746-2 (Industrial thermoprocessing equipment - Part 2: Safety requirements for combustion and fuel handling systems)
EN 55014-1 (Electromagnetic compatibility- Requirements for house hold appliances, electric tools and similar apparatus)
EN 60204-1:2006 (Safety of machinery – Electrical equipment of machines.)
CEI EN 60335-1 (Specification for safety of household and similar electrical appliances);
UNI EN ISO 12100:2010 (Safety of machinery - General principles for design - Risk assessment and risk reduction);

BURER DATA PLATE

For the following information, please refer to the data plate:

- Burner type and burner model: must be reported in any communication with the supplier
- Burner ID (serial number): must be reported in any communication with the supplier
- Date of production (year and month)
- Information about fuel type and network pressure

	Consump
Type	--
Model	--
Year	--
S.Number	--
Output	--
Oil Flow	--
Fuel	--
Category	--
Gas Pressure	--
Viscosity	--
El.Supply	--
El.Consump.	--
Fan Motor	--
Protection	--
Drwaing n°	--
P.I.N.	--

PART I: INSTALLATION

GENERAL FEATURES

Burners of this series are provided with a removable cover made of ABS, a heat and crash proof plastic material. The design of the shi-fitng flange assures an efficient tightness and room saving. The inspection glass allows checking the flame during operation. All the mechanical components are mopunted on a removable plate that makes routine maintenance operation easier. The combustion head position can be easily adjusted by means of a indexed screw and the peculiar air intake lower the noise levels. Single-stage or double-stage models are available.

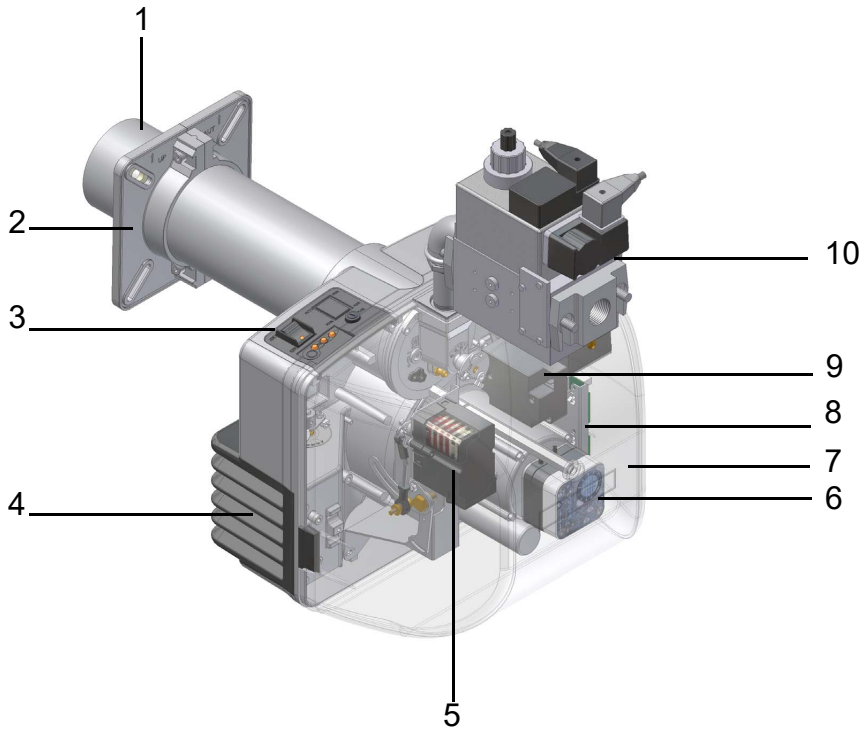

Fig. 1

1 Blast tube-combustion head ass.y
2 Burner flange
3 Control panel with startup switch
4 Air intake
5 Actuator (double-stage burners only)
6 Air pressure switch
7 Cover
8 Printed board circuit
9 Control box
10 Gas valves group

The gas coming from the supply line, passes through the valves group provided with filter and stabiliser. This one forces the pressure in the utilisation limits. In the double-stage, progressive and fully-modulating burners, the electric servocontrol (5) moves proportionally the air damper: it uses an adjusting cam with variable shape. This one allows the optimisation of the gas flue values, as to get an efficient combustion. The combustion head positioning determines the burner output. Fuel and comburent are routed into separated ways as far as the zone of flame generation (combustion chamber). The air (comburent) and fuel (gas, gas oil, heavy oil) are forced into the combustion chamber.

How to interpret the burner's "Performance curve"

To check if the burner is suitable for the boiler to which it must be installled, the following parameters are needed:

- furnace input, in kW or kcal/h (kW = kcal/h / 860);
- backpressure (data are available on the boiler's ID plate or in the user's manual).

Example:

Furnace input: 600kW

Backpressure: 4mbar

In the "Performance curve" diagram (Fig. 2), draw a vertical line matching the furnace input value and an horizontal line matching the backpressure value. The burner is suitable if the intersection point A is inside the performance curve.

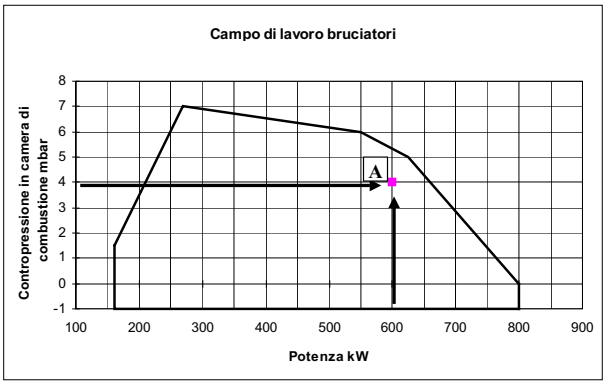

Fig. 2

Data are referred to standard conditions: atmospheric pressure at 1013mbar, ambient temperature at 15°C.

Checking the proper gas train size

To check the proper gas train size, it is necessary to the available gas pressure value upstream the burner's gas valve. Then subtract the backpressure. The result is called **pgas**. Draw a vertical line matching the furnace input value (600kW, in the example), quoted on the x-axis, as far as intercepitng the network pressure curve, according to the installed gas train (DN65, in the example). From the interception point, draw an horizontal line as far as matching, on the y-axis, the value of pressure necessary to get the requested furnace input. This value must be lower or equal to the **pgas** value, calculated before.

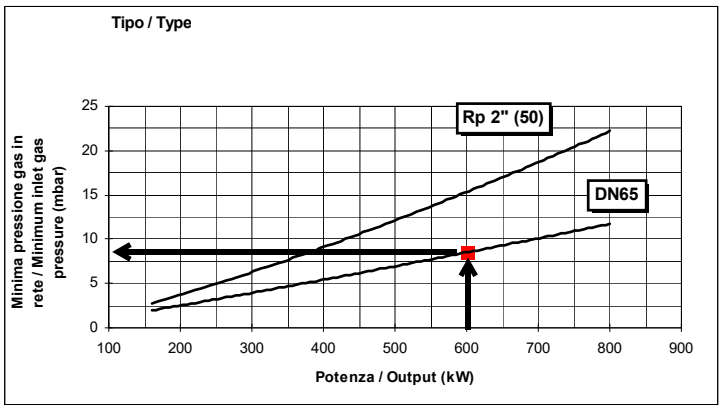

Fig. 3

Burner model identification

Burners are identified by burner type and model. Burner model identification is described as follows.

Type **NG200** Model **M-. TN. S. .* A. 0. 15** (1) (2) (3) (4) (5) (6) (7) (8)	
(1) BURNER TYPE	NG - Natural gas burner LG - L.P.G. burner NGX - Low NOx burners
(2) FUEL	M - Natural gas L - LPG
(3) OPERATION(Available versions)	TN - Single stage AB - Double stage PR - Progressive MD - Fully modulating
(4) BLAST TUBE	S - standard L - Extended
(5) DESTINATION COUNTRY	* see data plate
(6) BURNER VERSION	A - Standard Y - with external air intake
(7) EQUIPMENT	0 = 2 gas valves 1= 2 Gas valves + gas proving system 7 = 2 gas valves + high gas pressure switch 8= 2 Gas valves + gas proving system + high gas pressure switch
(8) GAS CONNECTION	15 = Rp1/2 20 = Rp 3/4 25 = Rp1

Specifications

BURNERS		**NG120 ..TN..15**	**NG120 ..TN..20**	**NG120 ..TN..25**	**LG120 L-.TN...15**	**LG120 L-.TN...20**
Output	min.- max. kW	60 - 120				
Fuel		Natural gas			L.P.G.	
Category		(see next paragraph)			$I_{3B/P}$	
Gas rate	min.-max.(Stm³/h)	6.4 - 12.7			2.3 - 4.6	
Gas pressure	min.-max.mbar	(Note2)				
Power supply	V / Hz	230 / 220 V - 50/60 Hz				
Power supply	V / Hz	110V-120V 60 Hz 1N a.c.				
Total power consumption	kW	0.48 (50/60Hz)				
Electric motor	kW	0.18 (50/60Hz)				
Protection		IP40				
Approx. weight	kkg	18				
Valves size - Gas connection		1/2" - Rp 1/2	3/4" - Rp 3/4	1" - Rp 1	1/2" - Rp 1/2	3/4" - Rp 3/4
Operation		Single stage				
Operating temperature	°C	-10 ÷ +50				
Storage Temperature	°C	-20 ÷ +60				
Working service *		Intermittent				

Fuel

The burner technical specifications, described in this manual, refer to natural gas (calorific net value H_i = 9.45 kWh/Stm^3, density ρ = 0.717 Kg/Stm^3). For different fuel such as biogas, multiply the values of flow and pressure by th corrective factors shown in the table below.

Fuel	**H_i** (KWh/Stm^3)	**ρ** (kg/Stm^3)	**f_Q**	**f_p**
Biogas	6,395	1,1472	1,478	3,5

For example, to obtain the flow and pressure values for the biogas:

$$Q_{biogas} = Q_{naturalGas} \cdot 1,478$$

$$p_{biogas} = p_{naturalGas} \cdot 3,5$$

ATTENTION! The combustion head type and the settings depend on the fuel. The burner must be used only for its intended purpose specified in the burner data plate .

ATTENTION! The corrective factors in the above table depend on the gas composition, so on the calorifc value and the density of the gas. The above value can be taken only as reference.

BURNERS		NG140..TN..15	NG140..TN..20	NG140..TN..25
Output	min.- max. kW	60 - 170		
Fuel		Natural gas		
Category		(see next paragraph)		
Gas rate	min.-max.(Stm³/h)	6.4 - 18		
Gas pressure	min.-max.mbar	(Note2)		
Power supply		230 / 220 V - 50/60 Hz		
Total power consumption	kW	0.48 (50/60Hz)		
Electric motor	kW	0.18 (50/60Hz)		
Protection		IP40		
Approx. weight	kkg	18		
Valves size - Gas connection		1/2” - Rp 1/2	3/4” - Rp 3/4	1” - Rp 1
Operation		Single stage		
Operating temperature	°C	-10 ÷ +50		
Storage Temperature	°C	-20 ÷ +60		
Working service *		Intermittent		

BURNERS		LG140..TN..15	LG140..TN..20	LG140..TN..25
Output	min.- max. kW	60 - 170		
Fuel		L.P.G.		
Category		$I_{3B/P}$		
Gas rate	min.-max.(Stm³/h)	2.3 - 6.5		
Gas pressure	min.-max.mbar	(Note2)		
Power supply		230 / 220 V - 50/60 Hz		
Total power consumption	kW	0.48 (50/60Hz)		
Electric motor	kW	0.18 (50/60Hz)		
Protection		IP40		
Approx. weight	kkg	18		
Valves size - Gas connection		1/2” - Rp 1/2	3/4” - Rp 3/4	1” - Rp 1
Operation		Single stage		
Operating temperature	°C	-10 ÷ +50		
Storage Temperature	°C	-20 ÷ +60		
Working service *		Intermittent		

BURNERS		NG200..TN...20	NG200..TN..25	LG200..TN..20	LG200..TN..25
Output	min.- max. kW	85 - 200			
Fuel		Natural gas		L.P.G.	
Category		(see next paragraph)		$I_{3B/P}$	
Gas rate	min.-max.(Stm³/h)	9 - 21		3.3 - 7.7	
Gas pressure	min.-max.mbar	(Note2)			
Power supply		230 / 220 V - 50/60 Hz			
Total power consumption	kW	0.48 (50/60Hz)			
Electric motor	kW	0.18 (50/60Hz)			
Protection		IP40			
Approx. weight	kkg	20			
Valves size - Gas connection		3/4” - Rp 3/4	1” - Rp 1	3/4” - Rp 3/4	1” - Rp 1
Operation		Single stage			
Operating temperature	°C	-10 ÷ +50			
Storage Temperature	°C	-20 ÷ +60			
Working service *		Intermittent			

BURNERS		NG140..xx..15	NG140..xx.20	NG140..xx.25	LG140..xx.15
Output	min.- max. kW	35 - 170			40 - 170
Fuel		Natural gas			L.P.G.
Category		(see next paragraph)			$I_{3B/P}$
Gas rate	min.-max.(Stm³/h)	3.7 - 18			1.5 - 6.5
Gas pressure	min.-max.mbar	(Note2)			
Power supply		230 / 220 V - 50/60 Hz			
Total power consumption	kW	0.48 (50/60Hz)			
Electric motor	kW	0.18 (50/60Hz)			
Protection		IP40			
Approx. weight	kkg	18			
Valves size - Gas connection		1/2” - Rp 1/2	3/4” - Rp 3/4	1” - Rp 1	1/2” - Rp 1/2
Operation		Double stage - Progressive - Fully modulating -			
Operating temperature	°C	-10 ÷ +50			
Storage Temperature	°C	-20 ÷ +60			
Working service *		Intermittent			

BURNERS		NG200..xx..20	NG200..xx..25	LG200..xx..20	LG200..xx..25
Output	min.- max. kW	42 - 200			
Fuel		Natural gas		L.P.G.	
Category		(see next paragraph)			
Gas rate	min.-max.(Stm³/h)	4.4 - 21		1.5 - 7.7	
Gas pressure	min.-max.mbar	(Note2)			
Power supply		230 / 220 V - 50/60 Hz			
Total power consumption	kW	0.48 (50/60Hz)			
Electric motor	kW	0.18 (50/60Hz)			
Protection		IP40			
Approx. weight	kg	20			
Valves size - Gas connection		3/4” - Rp 3/4	1” - Rp 1	3/4” - Rp 3/4	1” - Rp 1
Operation		Double stage - Progressive - Fully modulating -			
Operating temperature	°C	-10 ÷ +50			
Storage Temperature	°C	-20 ÷ +60			
Working service *		Intermittent			

BURNERS		LG140..xx..15	LG140..xx.20	LG140..xx.25
Output	min.- max. kW	40 - 170		
Fuel		L.P.G.		
Category		$I_{3B/P}$		
Gas rate	min.-max.(Stm³/h)	1.5 - 6.5		
Gas pressure	min.-max.mbar	(Note2)		
Power supply		230 / 220 V - 50/60 Hz		
Total power consumption	kW	0.48 (50/60Hz)		
Electric motor	kW	0.18 (50/60Hz)		
Protection		IP40		
Approx. weight	kg	18		
Valves size - Gas connection		1/2” - Rp 1/2	3/4” - Rp 3/4	1” - Rp 1
Operation		Double stage - Progressive - Fully modulating		
Operating temperature	°C	-10 ÷ +50		
Storage Temperature	°C	-20 ÷ +60		
Working service *		Intermittent		

*** NOTE ON THE WORKING SERVICE: the SIEMENS LME.. control box automatically stops after 24h of continuous working. The control box immediately starts up, automatically.**

Low NOx burners

BURNERS		NGX120 M-.TN...20	NGX120 M-.xx...20
Output	min.- max. kW	75 - 120	35 - 120
Fuel		Natural gas	
Category		(see next paragraph)	
Gas rate	min.-max.(Stm³/h)	8.0 - 12.7	3.7 - 12.7
Gas pressure	min.-max.mbar	(Note2)	
Power supply		230 / 220 V - 50/60 Hz	
Total power consumption	kW	0.48 (50/60Hz)	
Electric motor	kW	0.18 (50/60Hz)	
Protection		IP40	
Approx. weight	kg	20	
Valves size - Gas connection		3/4” - Rp 3/4	
Operation		Single stage	Double stage - Progressive - Fully modulating
Operating temperature	°C	-10 ÷ +50	
Storage Temperature	°C	-20 ÷ +60	
Working service *		Intermittent	

BURNERS		NGX200..TN..20	NGX200..TN..25	NGX200..xx..20	NGX200..xx..25
Output	min.- max. kW	85 - 150		40 - 150	
Fuel		Natural gas		Natural gas	
Category		(see next paragraph)			
Gas rate	min.-max.(Stm³/h)	9 - 16		4.2 - 16	
Gas pressure	min.-max.mbar	(Note2			
Power supply		230 / 220 V - 50/60 Hz			
Total power consumption	kW	0.48 (50/60Hz)			
Electric motor	kW	0.18 (50/60Hz)			
Protection		IP40			
Approx. weight	kg	20			
Valves size - Gas connection		3/4” - Rp 3/4	1” - Rp 1	3/4” - Rp 3/4	1” - Rp 1
Operation		Single stage		Double stage - Progressive - Fully modulating	
Operating temperature	°C	-10 ÷ +50			
Storage Temperature	°C	-20 ÷ +60			
Working service *		Intermittent			

Note1:	**All gas flow rates are referred to Stm³/h (1013 mbar absolute pressure, 15 °C temperature) and are valid for G20 gas (nett calorific value H_i = 34.02 MJ/Stm³); for L.P.G. (nett calorific value H_i = 93.5 MJ/Stm³)**
Note2:	**Maximum gas pressure = 360mbar (with Dungs MBDLE/MBC valves)** **= 100 mbar (with Krom-Schroeder CG2.. valves)** **Minimum gas pressure = see gas curves.**

*** NOTE ON THE WORKING SERVICE: the SIEMENS LME.. control box automatically stops after 24h of continuous working. The control box immediately starts up, automatically.**

Country and usefulness gas categories

GAS CATEGORY	COUNTRY																								
	AT	ES	GR	SE	FI	IE	HU	IS	NO	CZ	DK	GB	IT	PT	CY	EE	LV	SI	MT	SK	BG	LT	RO	TR	CH
I_{2H}	LU	PL	-	-	-	-	-	-	-	-	-	-	-	-	-	-	-	-	-	-	-	-	-	-	-
I_{2E}	BE	-	-	-	-	-	-	-	-	-	-	-	-	-	-	-	-	-	-	-	-	-	-	-	-
$I_{2E(R)B}$	NL	-	-	-	-	-	-	-	-	-	-	-	-	-	-	-	-	-	-	-	-	-	-	-	-
I_{2L}	DE	-	-	-	-	-	-	-	-	-	-	-	-	-	-	-	-	-	-	-	-	-	-	-	-
I_{2ELL}	FR	-	-	-	-	-	-	-	-	-	-	-	-	-	-	-	-	-	-	-	-	-	-	-	-
I_{2Er}																									

Overall dimensions (mm)

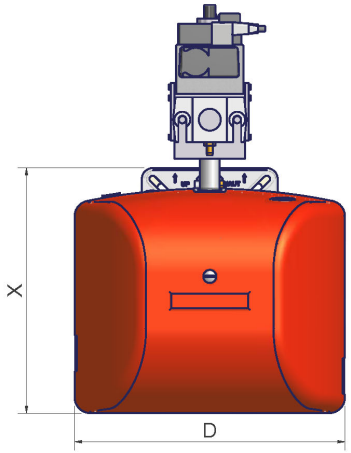

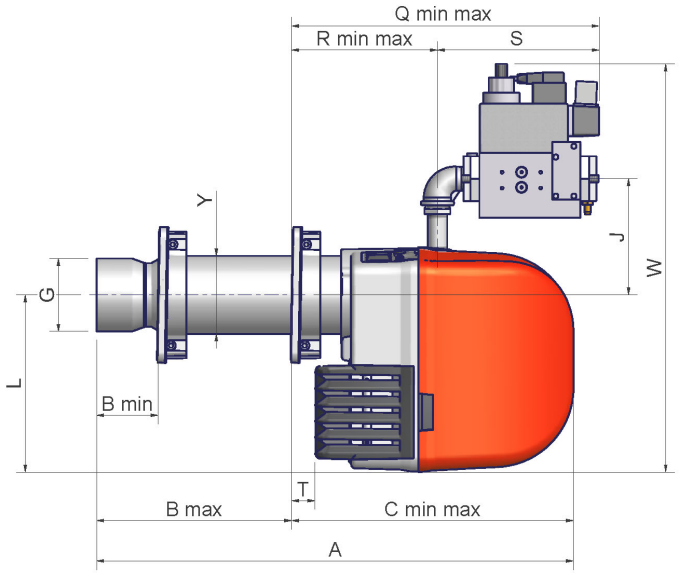

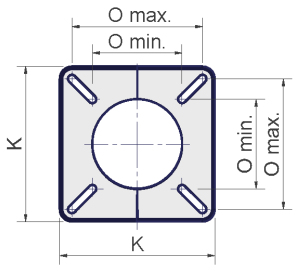

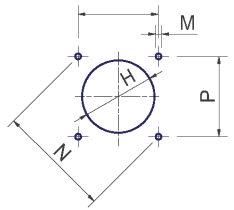

Burner flange and recommended boiler drilling template

	DN	A	Bmin.	Bmax.	Cmin.	Cmax.	D	G	H	J	K	L	M	N	Omin.	Omax.	P	Q		R		S	Tmin.	W	X	Y
NG120- (S)	15	560	85	170	390	475	374	Ø101	Ø128	161	188	245	M8	188	109	158	133	382	467	202	287	180	32	537	340	Ø108
NG120- (L)	15	660	85	270	390	575	374	Ø101	Ø128	161	188	245	M8	188	109	158	133	382	567	202	387	180	32	537	340	Ø108
NG140 - (S)	20	560	85	170	390	475	374	Ø101	Ø128	161	188	245	M8	188	109	158	133	382	467	202	287	180	32	537	340	Ø108
NG140- (L)	20	660	85	270	390	575	374	Ø101	Ø128	161	188	245	M8	188	109	158	133	382	567	202	387	180	32	537	340	Ø108
NG140- (S)	25	560	85	170	390	475	374	Ø101	Ø128	161	188	245	M8	188	109	158	133	426	511	202	287	224	32	565	340	Ø108
NG140- (L)	25	660	85	270	390	575	374	Ø101	Ø128	161	188	245	M8	188	109	158	133	426	611	202	387	224	32	565	340	Ø108
NG200- (S)	20	560	85	170	390	475	374	Ø117	Ø137	161	188	245	M8	188	109	158	133	382	467	202	287	180	32	537	340	Ø108
NG200- (L)	20	660	85	270	390	575	374	Ø117	Ø137	161	188	245	M8	188	109	158	133	382	567	202	387	180	32	537	340	Ø108
NG200- (S)	25	560	85	170	390	475	374	Ø117	Ø137	161	188	245	M8	188	109	158	133	426	511	202	287	224	32	565	340	Ø108
NG200- (L)	25	660	85	270	390	575	374	Ø117	Ø137	161	188	245	M8	188	109	158	133	426	611	202	387	224	32	565	340	Ø108

	DN	A	Bmin.	Bmax.	Cmin.	Cmax.	D	G	H	J	K	L	M	N	Omin.	Omax.	P	Q		R		S	Tmin.	W	X	Y
NGX120- (S)	15	560	85	170	390	475	374	Ø108	Ø128	161	188	245	M8	188	109	158	133	382	467	202	287	180	32	537	340	Ø108
NGX120- (L)	15	660	85	270	390	575	374	Ø108	Ø128	161	188	245	M8	188	109	158	133	382	567	202	387	180	32	537	340	Ø108
NGX120- (S)	25	560	85	170	390	475	374	Ø108	Ø128	161	188	245	M8	188	109	158	133	382	467	202	287	180	32	537	340	Ø108
NGX120- (L)	25	660	85	270	390	575	374	Ø108	Ø128	161	188	245	M8	188	109	158	133	382	567	202	387	180	32	537	340	Ø108
NGX200- (S)	25	560	85	170	390	475	374	Ø114	Ø134	161	188	245	M8	188	109	158	133	382	467	202	287	180	32	537	340	Ø108
NGX200- (L)	25	660	85	270	390	575	374	Ø114	Ø134	161	188	245	M8	188	109	158	133	382	567	202	387	180	32	537	340	Ø108

*S = standard blast tube
L = extended blast tube**NG200: controflangia**

Performance curves

- **Natural gas burners**

NG120 M-.TN...

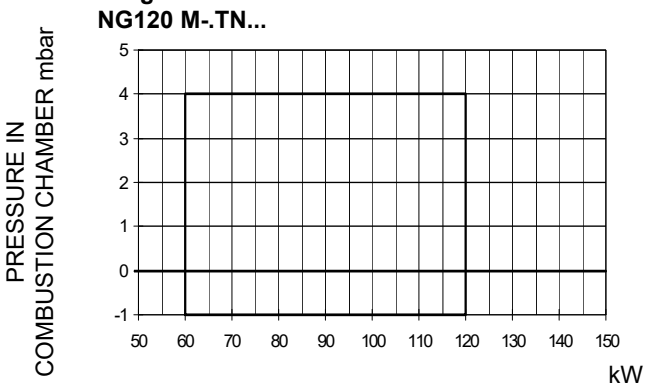

NG140 M-.TN...

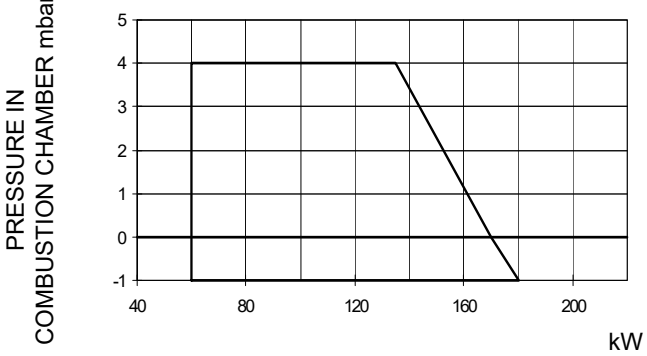

NG140 M-.xx...

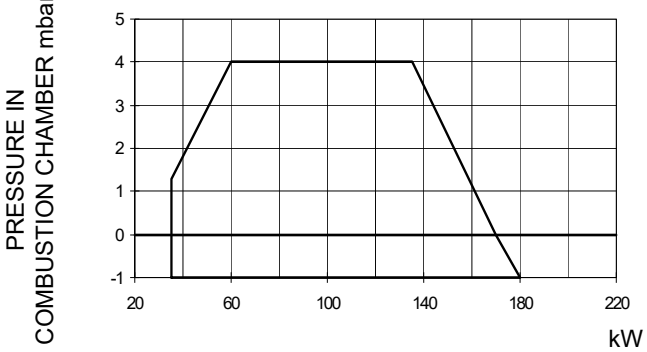

NG200 M-.TN...

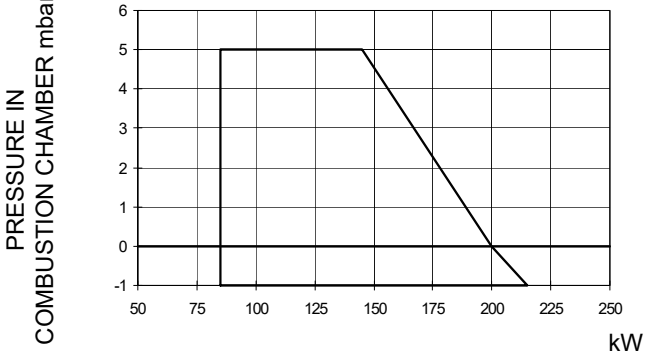

NG200 M-.xx...

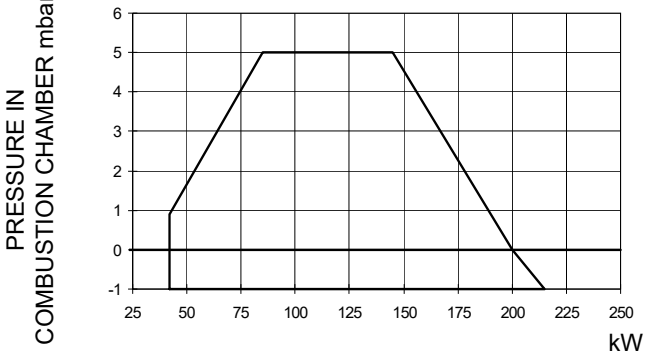

- **LPG burners**

LG120 L-.TN...

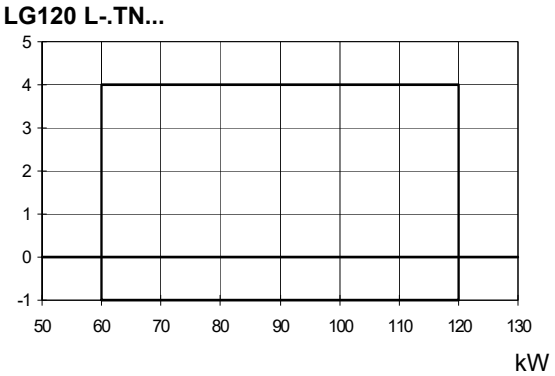

LG140 L-.TN...

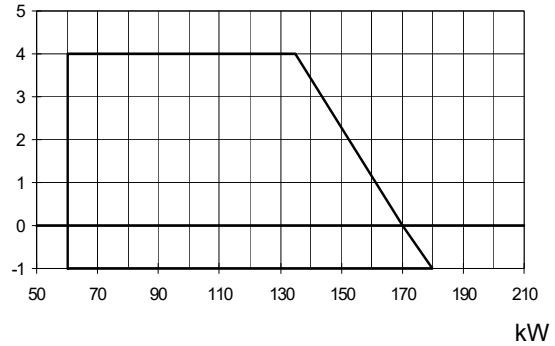

LG140 L-.xx...

LG200 L-.TN...

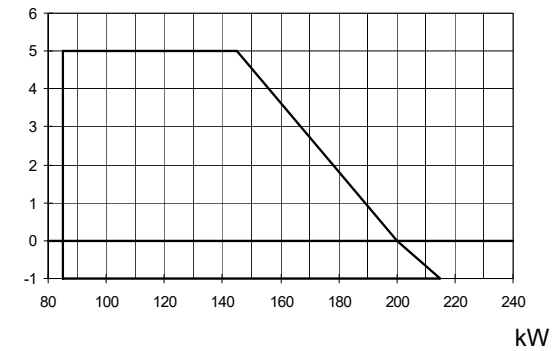

LG200 L-.xx...

To get the input in kcal/h, multiply value in kW by 860.

Data are referred to standard conditions: atmospheric pressure at 1013mbar, ambient temperature at 15°C.

NOTE: The performance curve is a diagram that represents the burner performance in the type approval phase or in the laboratory tests, but does not represent the regulation range of the machine. On this diagram the maximum output point is usually reached by adjsuting the combustion head to its “MAX” position (see paragraph “Adjusting the combustion head”); the minimum output point is reached setting the combustion head to its “MIN” position. During the first ignition, the combustion head is set in order to find a compromise between the burner output and the generator specifications, that is why the minimum output may be different from the Performance curve minimum

Pressure/rate in the network curves

- **Natural gas Burners**

NG120 M-.TN...

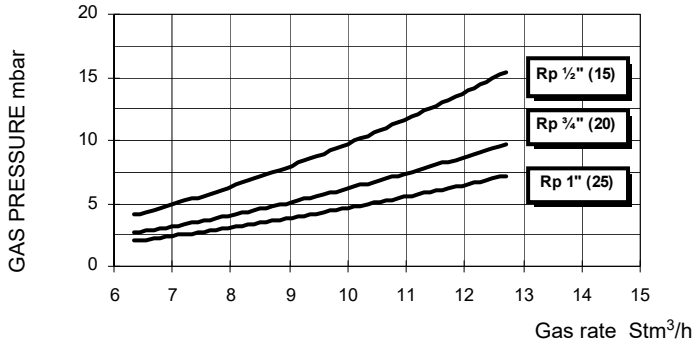

NG140 M-.TN...

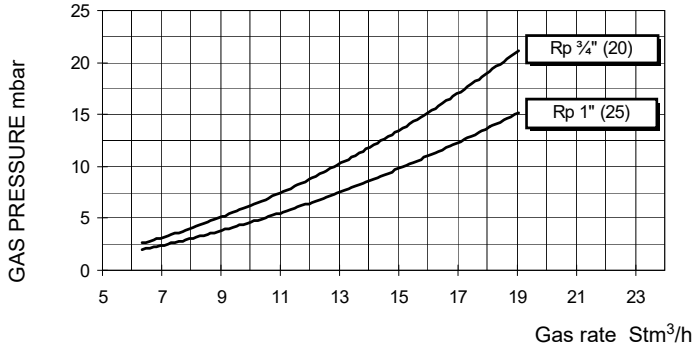

NG140 M-.xx...

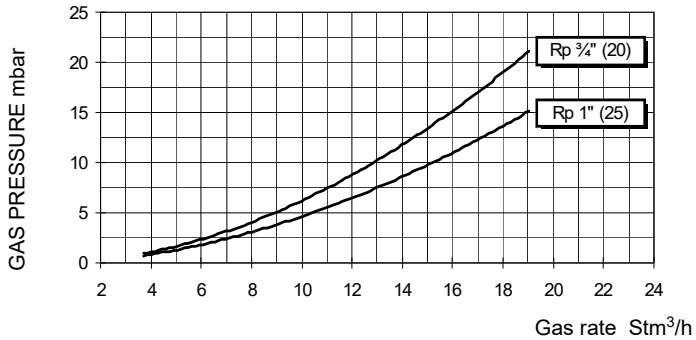

NG200 M-.TN...

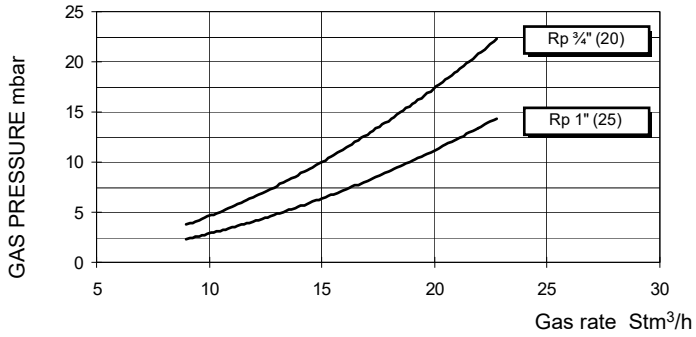

- **Natural gas BurnersLPG burners**

LG120 L-.TN...

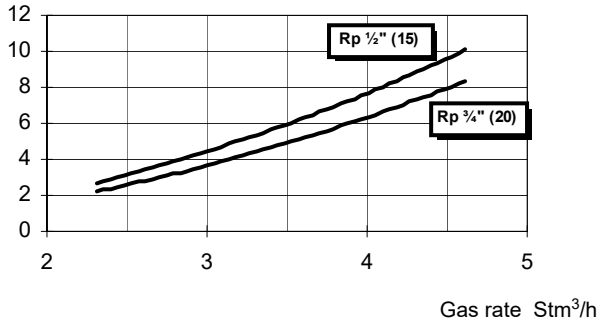

LG140 L-.TN...

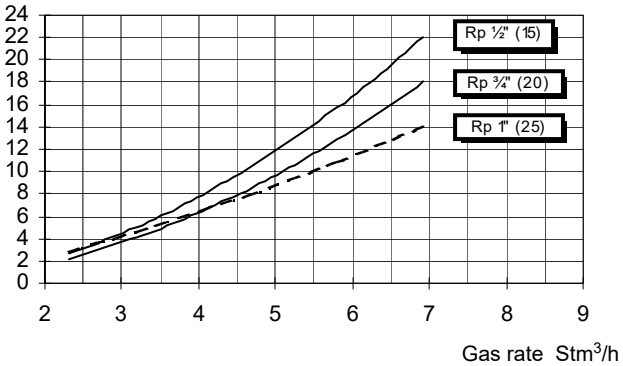

LG140 L-.xx...

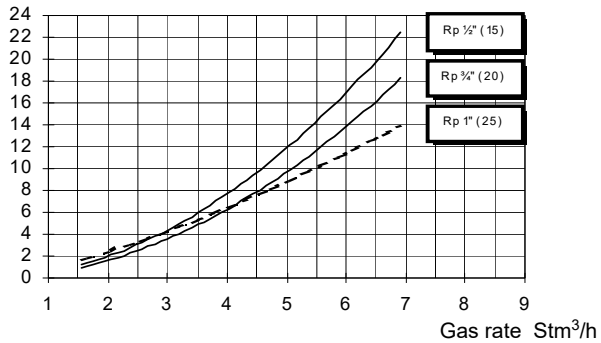

LG200 L-.TN...

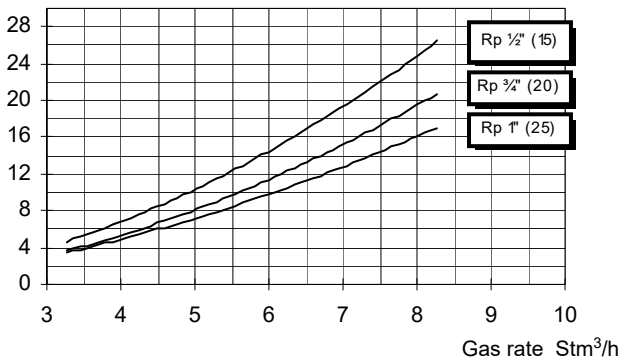

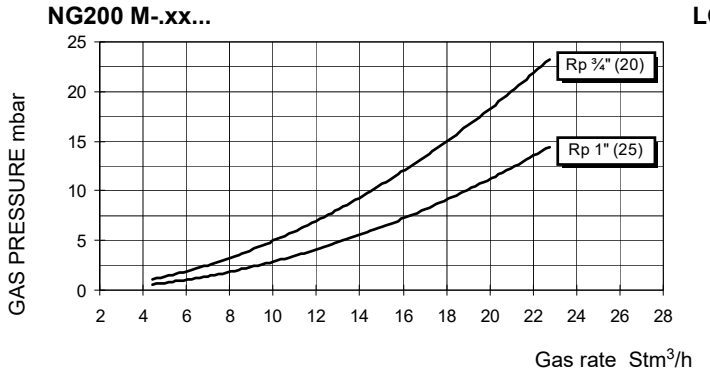

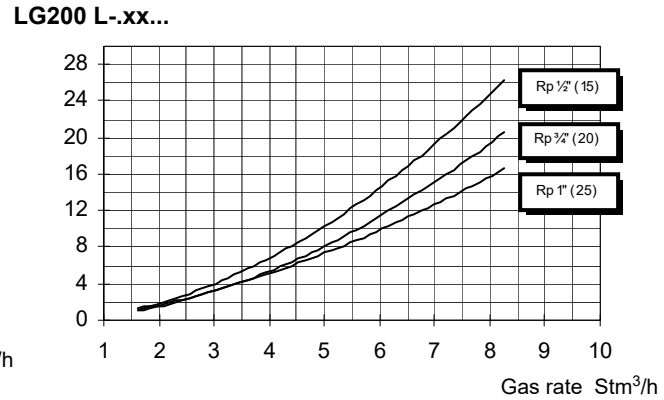

Low NOx gas burners

- **Performance curves**

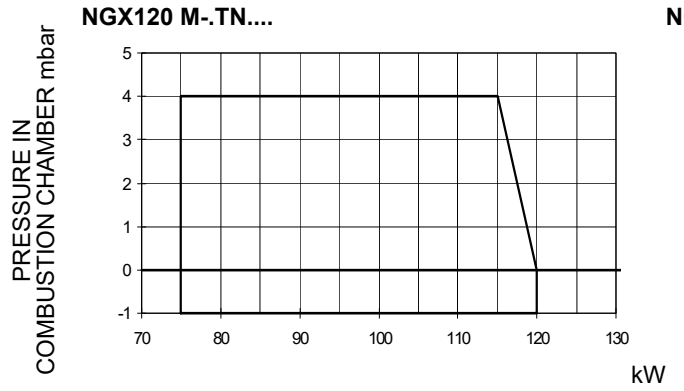

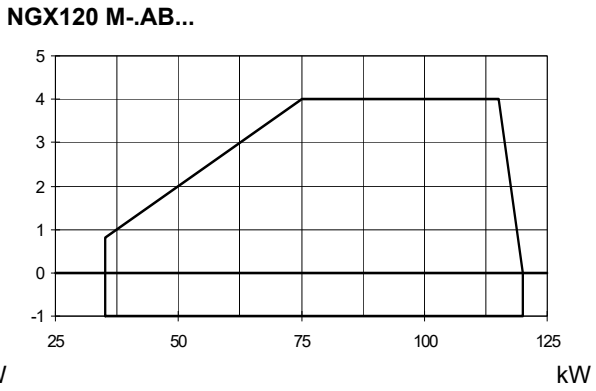

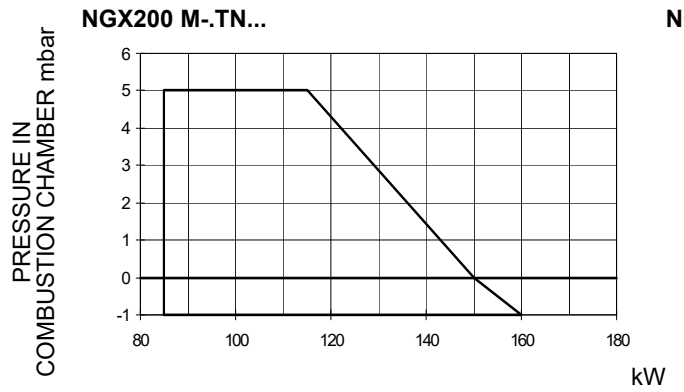

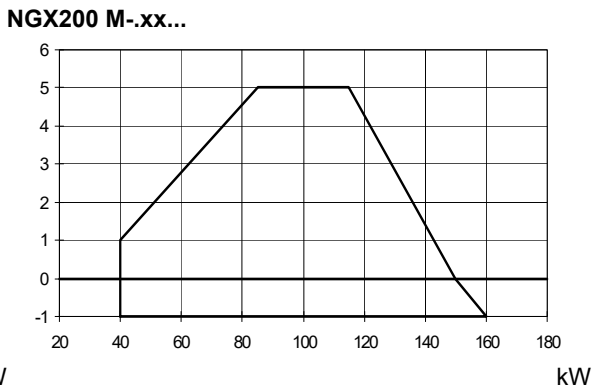

To get the input in kcal/h, multiply value in kW by 860.
Data are referred to standard conditions: atmospheric pressure at 1013mbar, ambient temperature at 15°C.

- **Pressure in the network - gas flow rate curves”**

NGX120 M-.TN...

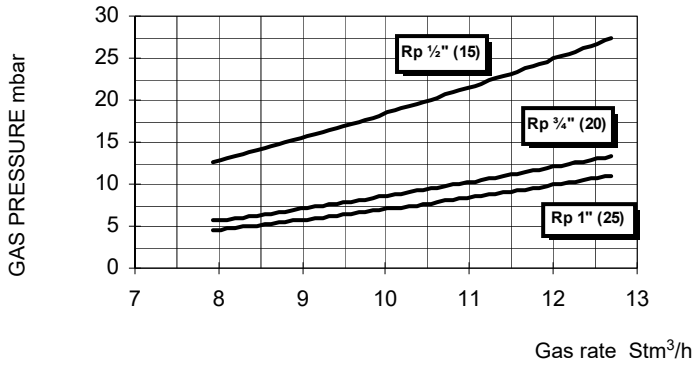

NGX120 M-.AB....

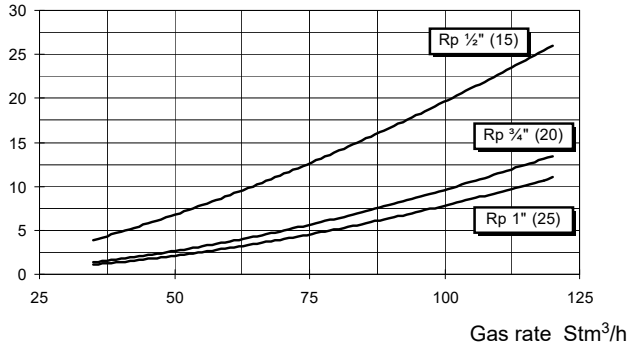

NGX200 M-.TN...

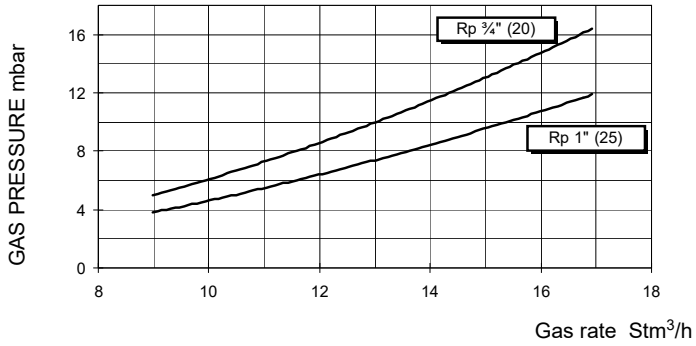

NGX200 M-.xx...

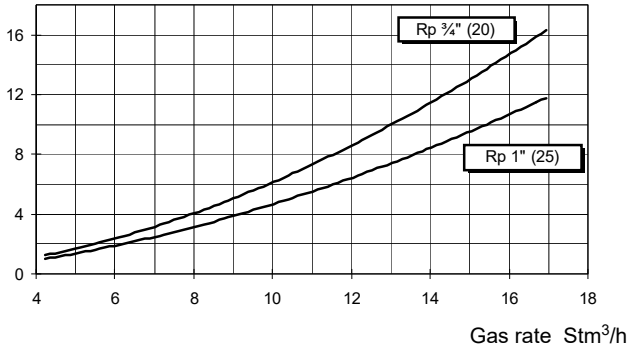

Caution: the gas rate value is quoted on the x-axis, the related network pressure is quoted on the y-axis (pressure value in the combustion chamber is not included). To know the minimum pressure at the gas train inlet, necessary to get the requested gas rate, add the pressure value in the combustion chamber to the value read on the y-axis.

MOUNTINGS AND CONNECTIONS

Packing

The burners are dispatched in cardboard packages whose dimensions are:

- Standard Blast tube: 600mm x 370mm x 400mm (L x P x H)
- Extended Blast tube: 750mm x 370mm x 400mm (L x P x H)

Packing cases of this kind are affected by humidity and are not suitable for stacking. The following are placed in each packing case.

- burner with detached gas train;
- gasket to be inserted between the burner and the boiler;
- envelope containing this manual.

To get rid of the burner's packing, follow the procedures laid down by current laws on disposal of materials.

Fitting the burner to the boiler

To install the burner into the boiler, proceed as follows:

1 on the boiler's door hole, fix the 4 stud bolts according to the drilling template showed on paragraph "Overall dimensions"
2 fix the flange of the burner to the boiler;
3 install the burner into the boiler;
4 according to the reference showed on Fig. 3, fix the flange to the boiler's stud bolts **D**, without completely fastening;
5 loosen the **VS** screws in order to let the blast tube move back and forth;
6 install the burner making the blast tube move into the flange as to reach the right position according to the boiler/utilisation
7 fasten the **VS** screws:
8 tighten the 4 stud blolts **D** completely;
9 seal the space between the blast tube and the refractory lining with appropriate insulating material (ceramic fibre cord or refractory cement).

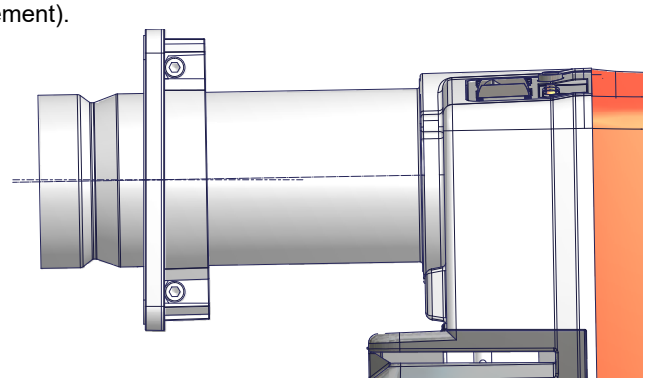

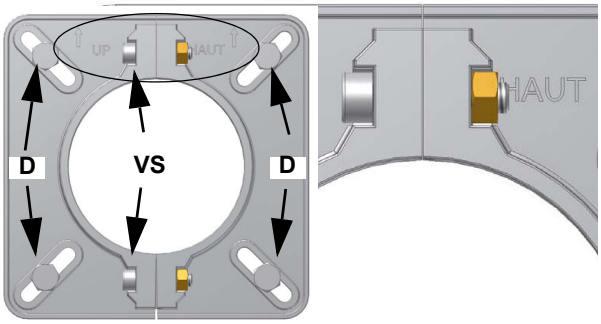

Matching the burner to the boiler

The burners described in this manual have been tested with combustion chambers that comply with EN676 regulation and whose dimensions are described in the diagram . In case the burner must be coupled with boilers with a combustion chamber smaller in diameter or shorter than those described in the diagram, please contact the supplier, to verify that a correct matching is possible, with respect of the application involved. To correctly match the burner to the boiler verify the necessary input and the pressure in combustion chamber are included in the burner performance curve; otherwise the choice of the burner must be revised consulting the burner manufacturer. To choose the blast tube lenght follow the instructions of the boiler manufacturer. In absence of these consider the following:

- Cast-iron boilers, three pass flue boilers (with the first pass in the rear part): the blast tube must protrude no more than 100 mm into the combustion chamber.
- Pressurised boilers with flame reversal: in this case the blast tube must penetrate at least 50 - 100 mm into combustion chamber in respect to the tube bundle plate.

The length of the blast tubes does not always allow this requirement to be met, and thus it may be necessary to use a suitably-sized spacer to move the burner backwards or to design a blast tube tha suites the utilisation (please, contact the manifacturer).

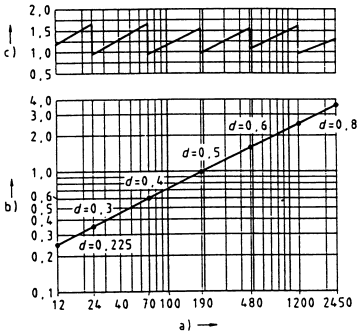

Key

a) Heat output in kW

b) Length of the flame tube in meters

c) Flame tube firing intensity in MW/m^3

d) Combustion chamber diameter (m)

Fig. 1 - Firing intensity, diameter and lenght of the test flame tube as a function of the heat input in kW.

Installing the gas train

⚠	**ATTENTION:** BEFORE EXECUTING THE CONNECTIONS TO THE GAS PIPE NETWORK, BE SURE THAT THE MANUAL CUTOFF VALVES ARE CLOSED. READ CAREFULLY THE “WARNINGS” CHAPTER AT THE BEGINNING OF THIS MANUAL.

The following diagram shows the gas train components which are included in the delivery and those which must be fitted by the customer. The diagram complies with regulations in force.

Gas train with valves group MB-DLE (2 valves + gas filter + pressure governor) + VPS504 gas proving system

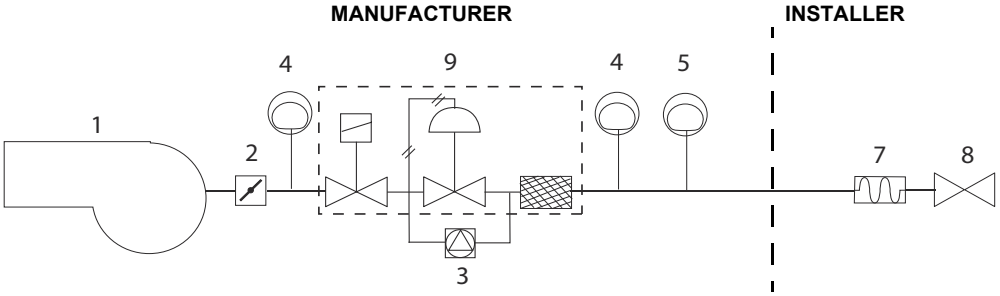

Key

1 Burner
2 Butterfly valve
3 Gas proving system (option)
4 Low gas pressure switch
5 High gas pressure switch (option)
7 Bellow joint
8 Manual cutoff valve
9 MB-DLE valve group

*Note: the maximum gas pressure switch can be mounted either upstream or downstream the gas valve but upstream the butterfly gas valve (see item no.4 in the scheme above).

NOTE: the bellow joint, the manual valve and the gaskets are not part of the standard supply.

To mount the gas train, proceed as follows:

1) in case of threaded joints: use proper seals according to the gas used;
2) fasten all the items by means of screws, according to the next diagrams, observing the mounting direction for each item.

NOTE: the bellow joint, the manual valve and the gaskets are not part of the standard supply.

The procedures of installation fo the gas valves are showed in the next paragraph.

⚠	**ATTENTION:** once the gas train is mounted according to the diagram, the gas proving test mus be performed, according to the procedure set by the laws in force.

ATTENTION: it is recommended to mount filter and gas valves to avoid that extraneous material drops inside the valves, during maintenance and cleaning operation of the filters (both the filters outside the valves group and the ones built-in the gas valves).

MULTIBLOC DUNGS MB-DLE 405..412

Mounting

1. Mount flange onto tube lines: use appropriate sealing agent (see Fig. 6);
2. insert MB-DLE: note position of O rings (see Fig. 6);
3. tighten screws A, B, C and D (Fig. 4 - Fig. 5), accordind to the mounting positions (Fig. 7);
4. after installation, perform leakage and functional test;
5. disassembly in reverse order.

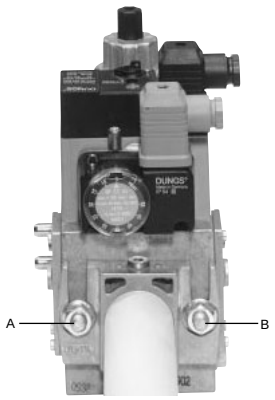

Fig. 4

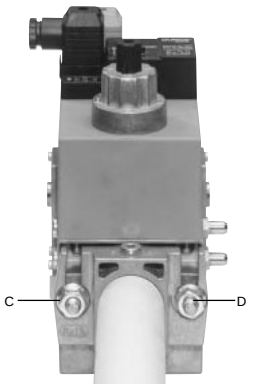

Fig. 5

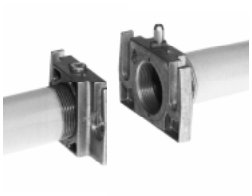

Fig. 6

MOUNTING POSITIONS

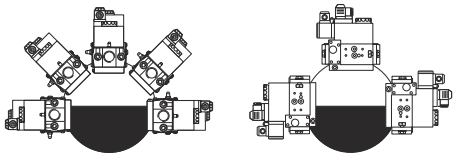

Fig. 7

Gas Proving System VPS504 (Option)

The VPS504 check the operation of the seal of the gas shut off valves. This check, carried out as soon as the boiler thermostat gives a start signal to the burner, creates, by means of the diaphragm pump inside it, a pressure in the test space of 20 mbar higher than the supply pressure.

To install the DUNGS VPS504 gas proving system on the MD-DLE valves group, proceed as follows:

1 turn off gas supply.;
2 Switch off power supply.
3 remove the Multibloc's screw plugs (Fig. 8-A);
4 iInsert sealing rings (10,5 x 2,25) into VPS 504 (Fig. 9-B, Fig. 8-B)
5 Torque screws 3, 4, 5, 6 (M4 x16) Fig. 8-C

Only use screws with metric thread on reassembly (modification, repair).

6 On completion of work, perform a leak and functional test.

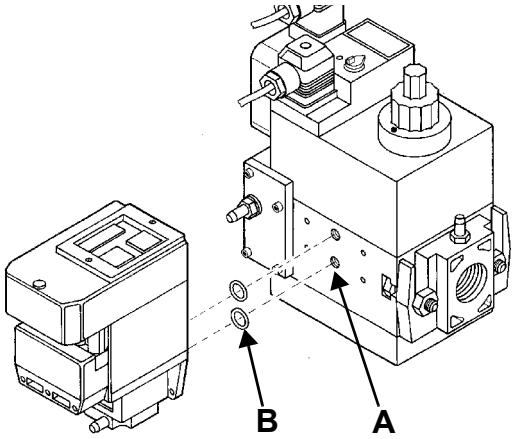

Fig. 8

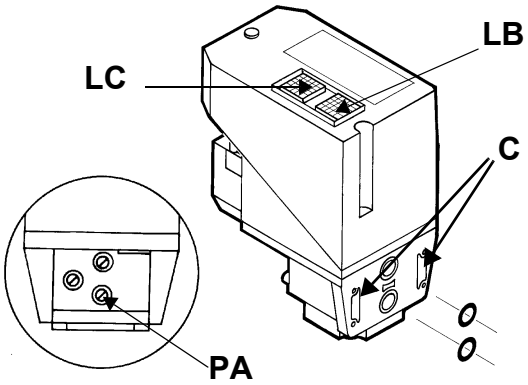

Fig. 9

When wishing to monitor the test, install a pressure gauge ranged to that of the pressure supply point **PA** (Fig. 9). If the test cycle is satisfactory, after a few seconds the consent light **LC** (yellow) comes on. In the opposite case the lockout light **LB** (red) comes on. To restart it is necessary to reset the appliance by pressing the illuminated pushbutton **LB**.

⚠	**ATTENTION:** once the gas train is mounted according to the diagram, the gas proving test mus be performed, according to the procedure set by the laws in force.

Once the train is installed, connect the gas valves group plug and the gas pressure switch one (on the valve group as well). Pay attention not to exchange them.

Electrical connections

	Respect the basic safety rules. make sure of the connection to the earthing system. do not reverse the phase and neutral connections. fit a differential thermal magnet switch adequate for connection to the mains.
	ATTENTION: before executing the electrical connections, pay attention to turn the plant's switch to OFF and be sure that the burner's main switch is in 0 position (OFF) too. Read carefully the chapter "WARNINGS", and the "Electrical connections" section.

	WARNING: if the cable that connects the thermostats and the control box should be longer than 3 meters, insert a sectioning relay following the attached electrical wiring diagram..

To execute the electrical connections, proceed as follows:

1 find the pulg or the plugs, according to the model, that comes out from the burnrer:
- 7 pins plug for power supply (all models)
- 4 pins plug (for AB - double stage burners);
- 7 pins plug (for MD - fully modulating burners);

2 execute the electrical connections to the plugs, according to hte burner model (see next paragraph);

3 now the burner is ready to start up.

	.The burner is fitted with a bridge between terminals T6 and T8 on the 4-poles plug-TAB (external side link, male connector); if the TAB high/low flame thermostat must be connected, remove the bridge between terminals, before connecting the thermostat.

	IMPORTANT: before operating the burner, be sure all connectors are linked as indicated in the diagrams.

Connectors identification

Burner power supply connector

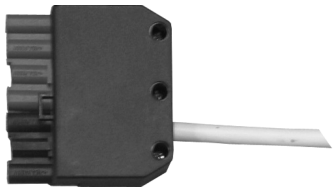

HIGH/LOW flame connector

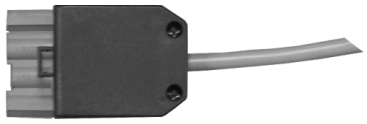

Single stage burner connector

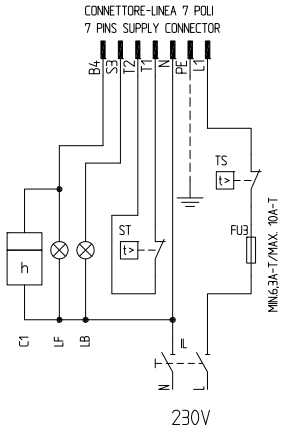

7-pins connector

Double-stage burner connectors

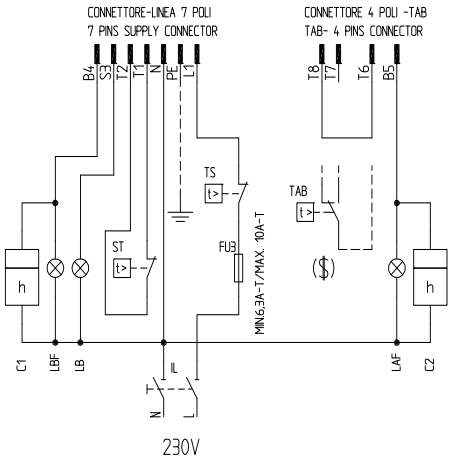

7-pins and 4-pins connectors

Key

C1	LOW FLAME TIME METER
C2	HIGH FLAME TIME METER
FU1	FAN MOTOR LINE FUSE
FU3	LINE FUSE
IL	BURNER LINE SWITCH
IM	FAN MOTOR LINE SWITCH
KM1	FAN MOTOR CONTACTOR
LAF	BURNER IN HIGH FLAME INDICATOR LIGHT
LB	INDICATOR LIGHT FOR BURNER LOCK-OUT
LBF	BURNER IN LOW FLAME SIGNALLING LAMP
MV	FAN MOTOR
ST	THERMOSTATS O PRESSURE SWITCHES SERIE
TAB	HIGH LOW FLAME THERMOSTAT/PRESSURE SWITCH
TS	SAFETY THERMOSTAT/PRESSURE SWITCH

CONN-MOTORE FAN MOTOR CONNECTOR

CONN-LINEA BURNER POWER SUPPLY CONNNECTOR

CONN-TAB HIGH-LOW FLAME CONNECTOR

($) IF "TAB" USED REMOVE THE BRIDGE BETWEEN TERMINALS T6-T8

- ***Fully-modulating burners connectors:***

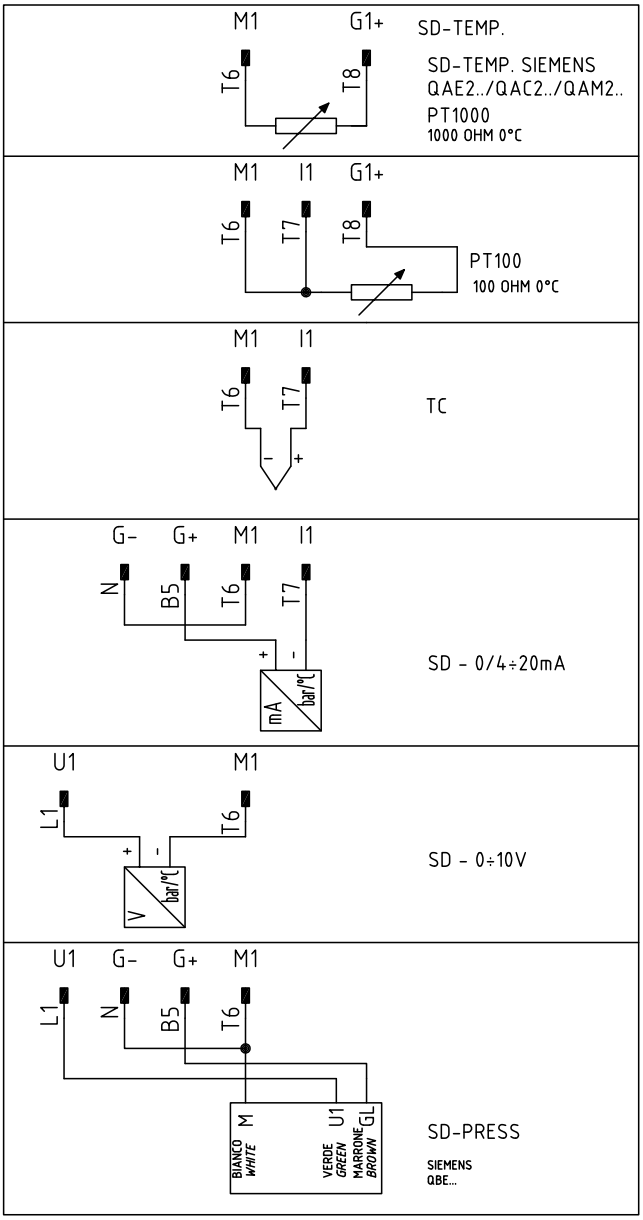

Fig. 10 - Probes connection by 7-pins connector

Key

C1 LOW FLAME TIME METER
FU1 LINE FUSE FOR FAN MOTOR
FU3 LINE FUSE
FU4 AUXILIARY FUSE
IL BURNER LINE SWITCH
IM FAN MOTOR LINE SWITCH
KM1 FAN MOTOR REMOTE CONTACTOR
SIEMENS RWF40 MODULATION REGULATOR
LB BURNER LOCKOUT SIGNALLING LAMP
LBF BURNER IN LOW FLAME SIGNALLING LAMP
MV FAN MOTOR
SD-0÷10V VOLTAGE SIGNAL
SD-0/4÷20mA CURENT SIGNAL
SD-PRESS PRESSURE PROBE
SMA MAN/AUTO SELECTOR
SMF OPERATION SELECTOR MIN-0-MAX
ST PRESSURE SWITCHES OR THERMOSTATS SERIE
TS SAFETY THERMOSTAT/PRESSURE SWITCH

Power supply without neutral

If the power supply to the burner is 230V phase-phase (without the neutral wire), with the Siemens LME.. control box, between the terminal 2 on the board and the earth terminal, an RC Siemens RC466890660 filter must be inserted.

Key
C - Capacitor (22nF/250V)
R - Resistor (1Mohm)
(***) RC466890660 - RC Siemens filter
(Code: 2531003)

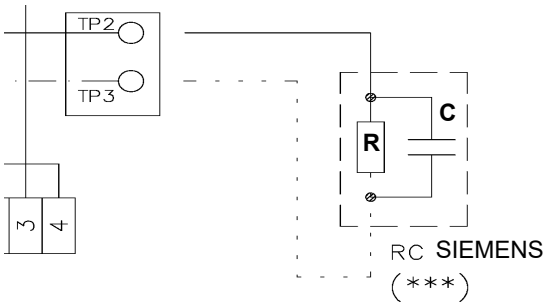

Fig. 11

As far as burners with no PCB provided, the RC Siemens circuit must be inserted between terminal 2 and the earth terminal of the Simens LME.. control box.

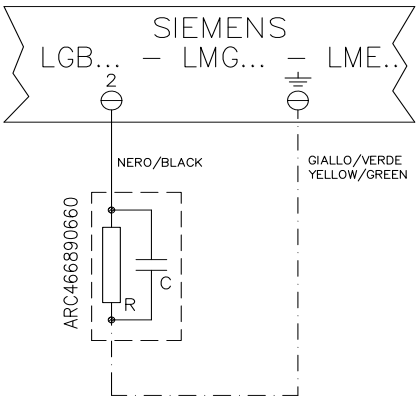

ADJUSTING THE AIR AND GAS FLOW RATES

Combustion head pressure curves vs. the gas flow rate

Curves are referred to pressure= 0mbar in the combustion head!

The curves referred to the gas pressure in the combustion head, depending on the gas flow rate, are referred to the burner in the combustion stage (percentage of residual O_2 in the flues as shown in the “Recommended combustion values” table and CO in the standard limits). During this stage, the combustion head, the gas butterfly valve and the servocontrol are at the maximum opening. Refer to Fig. 12, showing the correct way to measure the gas pressure, considering the values of pressure in combustion chamber, surveyed by means of the pressure gauge or taken from the boiler’s Technical specifications.

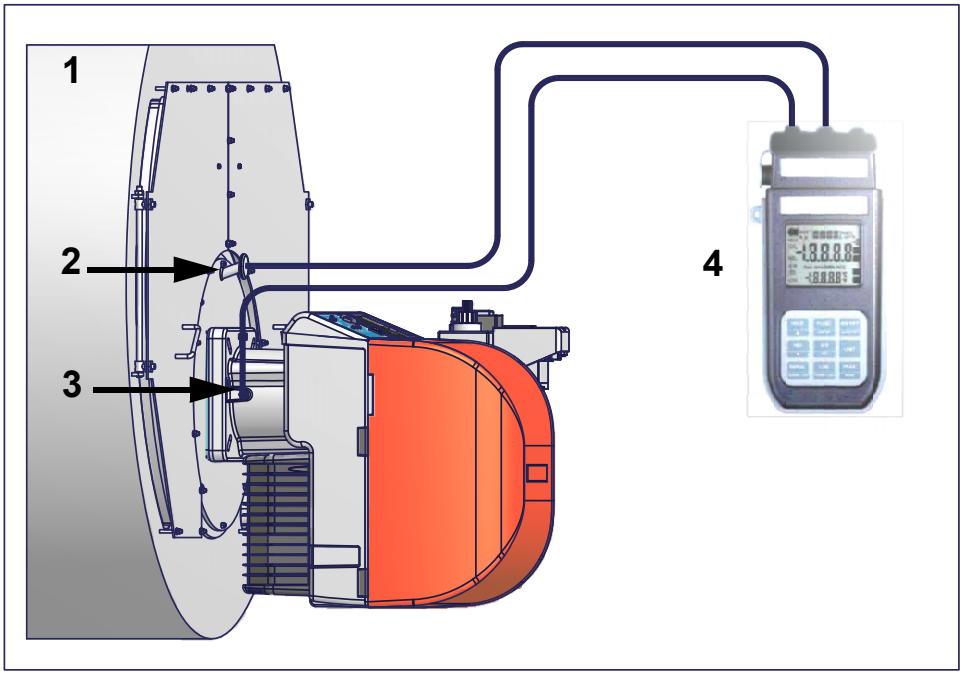

Fig. 12

Key

1 Generator
2 Pressure outlet on the combustion chamber
3 Gas pressure outlet on the butterfly valve
4 Differential pressure gauge

Measuring the gas pressure in the combustion head

In order to measure the pressure in the combustion head, insert the pressure gauge probes: one into the generator’s pressure outlet (Fig. 12-2) to get the pressure in the combustion chamber and the other one into the butterfly valve’s pressure outlet of the burner (Fig. 12-3). On the basis of the measured differential pressure, it is possible to get the maximum flow rate: in the pressure - rate curves (showed on the next paragraph), it is easy to get the burner output in kW or Stm3/h (quoted on the x axis) from the pressure measured in the combustion head (quoted on the y axis).

NOTE: THE PRESSURE-RATE CURVES ARE APPROXIMATE; FOR A PROPER SETTING OF THE GAS RATE, PLEASE REFER TO THE GAS METER READING.

Pressure in combustion head - gas flow rate curves

Natural gas Burners

NG120

NG140

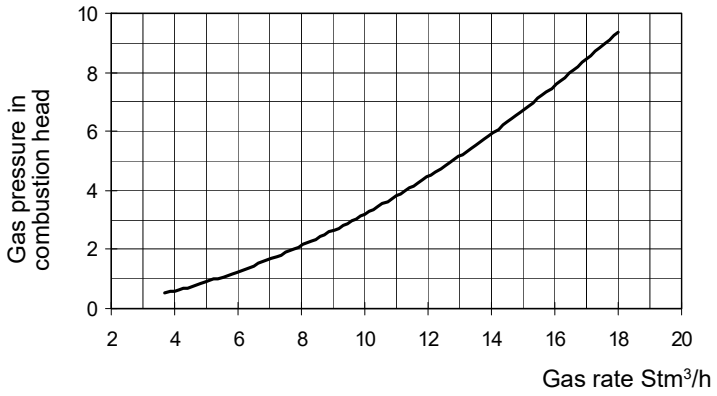

NG200

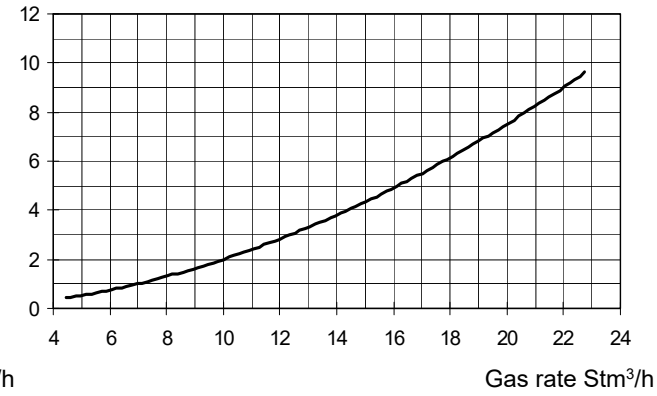

L.P.G. Burners

LG120

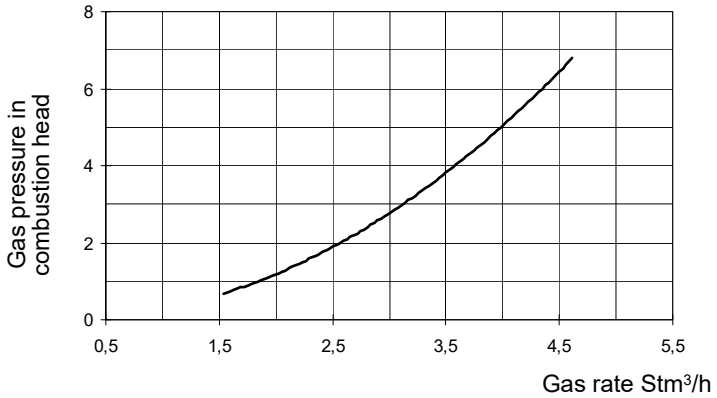

LG140

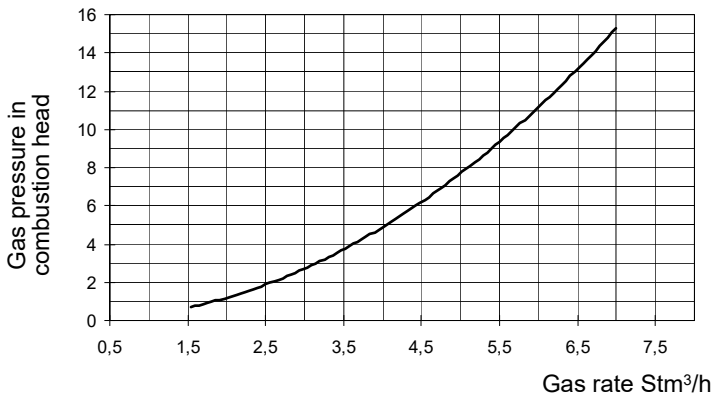

LG200

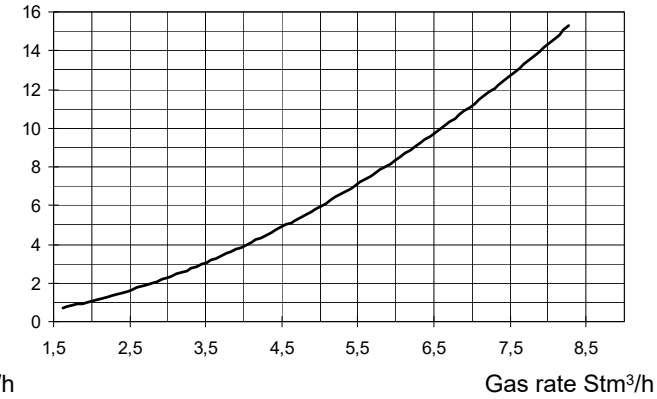

Low NOx burners

NGX120

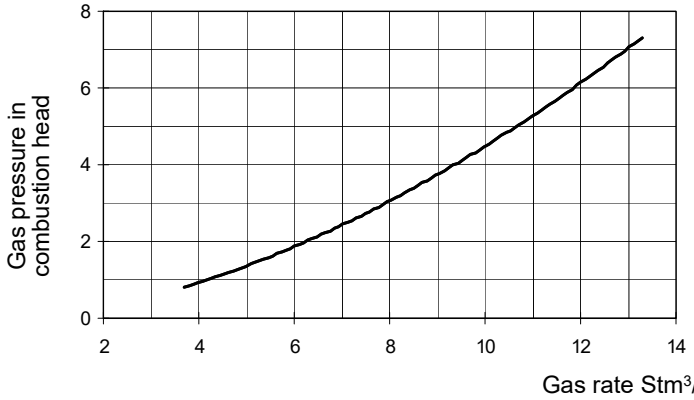

NGX200

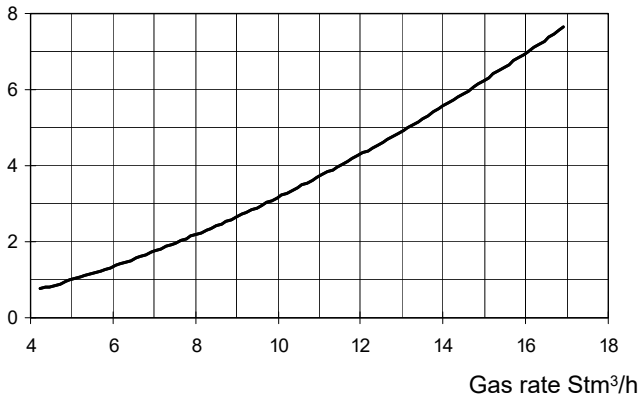

Setting gas and air flow rate

To perform the adjustments, unscrew the fixing screws and remove the burner cover.

⚠	***ATTENTION:*** **before starting the burner up, be sure that the manual cutoff valves are open and check that the pressure upstream the gas train complies the value quoted on paragraph "Technical specifications". Be sure that the mains switch is closed.**
	ATTENTION: During commissioning operations, do not let the burner operate with insufficient air flow (danger of formation of carbon monoxide); if this should happen, make the gas decrease slowly until the normal combustion values are achieved.
	WARNING: NEVER LOOSE THE SEALED SCREWS! OTHERWISE, THE DEVICE WARRANTY WILL BE IMMEDIATELY INVALIDATE!

Startup Output

The start-up heat output shall not exceed 120 kW (single stage burners) or 1/3 of nominal output (double-stage, progressive or fully modulating burners). In order to comply with these requirements, burners are provided with butterfly valve and/or slow-opening safety valve. On double-stage, progressive or modulating burners, the low flame ouptut must be higher than the minimum ouptut quoted in the performance curve (page 13).

⚠	**IMPORTANT! the combustion air excess must be adjusted according to the in the following chart:**

Recommended combustion parameters		
Fuel	Recommended (%) CO_2	Recommended (%) O_2
Natural gas	9 ÷ 10	3 ÷ 4.8
LPG	11 ÷ 12	2.8 ÷ 4.3

Adjustments - brief description

Adjust the air and gas flow rates at the maximum output ("high flame") first, by means of the air damper and the adjusting cam respectively.

- Check that the combustion parameters are in the suggested limits.
- Check the flow rate measuring it on the counter or, if it was not possible, verifying the combustion head pressure by means of a differential pressure gauge, as described on par. see "Measuring the gas pressure in the combustion head" on page 21.
- Then, adjust the combustion values corresponding to the points between maximum and minimum: set the shape of the adjusting cam foil. The adjusting cam sets the air/gas ratio in those points, regulating the opening-closing of the throttle gas valve.
- Set, now, the low flame output, acting on the low flame microswitch of the actuator in order to avoid the low flame output increasing too much or that the flues temperature gets too low to cause condensation in the chimney.

To change the burner setting during the testing in the plant, follows the next procedure, according to the model provided.

Adjustment procedure

1 Before starting the burner up, drive the high flame actuator microswitch matching the low flame one (in order to let the burner operates at the lowest output) to safely achieve the high flame stage.

2 startup the burner by turning its main switch **A** to on: if the burner locks (LED **B** on in the control panel) press the RESET button (**C**) on the burner cover.

3 Start the burner up by means of the thermostat series and wait until the pre-purge time comes to an end and that the burner starts up;

4 drive the burner to high flame stage, by means fo the thermostat **TAB (except single-stage burners)**.

5 go on adjusting air and gas flow rates: check, continuosly, the flue gas analisys, as to avoid combustion with little air; dose the air according to the gas flow rate change following the steps quoted below;

6 Then move progressively the microswitch to higher values until it reaches the high flame position; always check the combustion values and eventually adjusting the gas by means of the valves group stabiliser.

As for the setting, refer to the following chart. On this actuator, the manual control of the air damper is not provided; the setting of the cams is carried out working by a screwdriver on the **VS** screw placed internally to the cam.

Berger STA

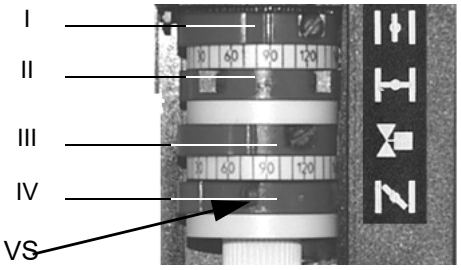

Siemens SQN72

	BERGER STA	Siemens SQN72
High flame position (set to 90°)	I	I (red)
Low flame and ignition position	IV	III (orange)
Stand-by position (set to 0°)	II	II (blue)
Not used	III	IV (black)

Note: to move the cams, use

- Berger STA: on this actuator, the manual control of the air damper is not provided; the setting of the cams is carried out working with a screwdriver on the **VS** screw placed on the cam.
- Siemens SQN72: a key is provided to move cams I and IV, the other cams can be moved by means of screws. On the Siemens actuator the AUTO/MAN mode is provided (see picture).

7 acting on the pressure stabiliser of the valves group, adjust the **gas flow rate in the high flame stage** (according to the burner model page 28-26) as to meet the values requested from the boiler/utilisation:

⚠ **Pressure controller is provisionally factory-set. The setting values must be locally adjusted to machine conditions.**

The burner is factory set with the combustion head at the position that refers to the "MAX" output. The maximum output setting refers to the "fully-ahead" position of the combustion head, as far as standard models (Fig. 14), and to "fully-backward" position for low NOx burners (Fig. 15). As for "fully-ahead" position, it means that the head is placed inside the boiler, "fully-backward" position means that the head is towards the operator. As far as the reduced output operation, progressively move the combusiton head towards the "MIN" position, rotating clockwise the **VRT** screw (Fig. 13). The **ID** index shows how much the combustion head moved.

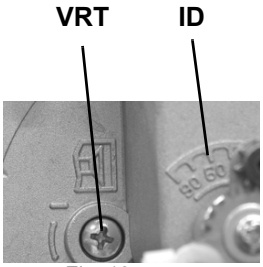

Fig. 13

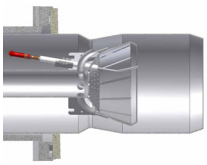

Fig. 14 - Head in "fully-ahead position"

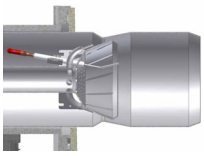

Fig. 15 - Head in "fully-backward position"

8 .*To adjust the air flow rate*, proceed as follows, according to the burner operation (single-stage, double-stage, progressive or fully-modulating):

9 once the combustion head is adjusted, remove the actuator cover (except single-stage models) and set it to the ignition position, (ignition position= 0° on the air damper index **ID**);

Single stage burners

To execute the **air flow rate adjustment**, proceed as follows:

10 loosen **VR** screw (see picture below)

11

12 move the **ID** index along the graduated slot towards + or -, in order to increase or decrease the air flow-rate, according to the required combustion values; fasten the **VR** screw again.

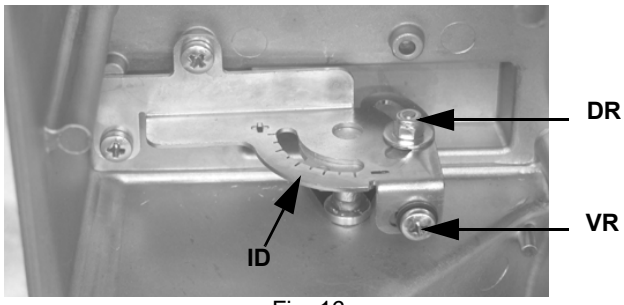

Fig. 16

Double stage, progressive and fully-modulating burners

13 The comburent air adjustment must be performed by means of the servocontrol. The servocontrol rotation must be equal to 90° (page 23). The air damper's opening in the high flame stage is imposed by the adjusting cam on Fig. 17. To adjust the air flow rate, slacken the nut **RA** (Fig. 17) and move the lever **VRA** through the slot as shown in Fig. 17, to increase or decrease the air rate, until the desired rate is obtained; lock then the nut **RA** in this position.

14 Drive the burner to the low flame operation, by the **TAB** boiler thermostat.

15 To eventually change the gas flow rate, slacken the screw **V1** (Fig. 94) and set the opening angle of the buttefly valve rotating the round plate **C** by means of the screw **V3** (turn clockwise to decrease the gas rate or counterclockwise to increase it). The index **S** shows the opening angle.

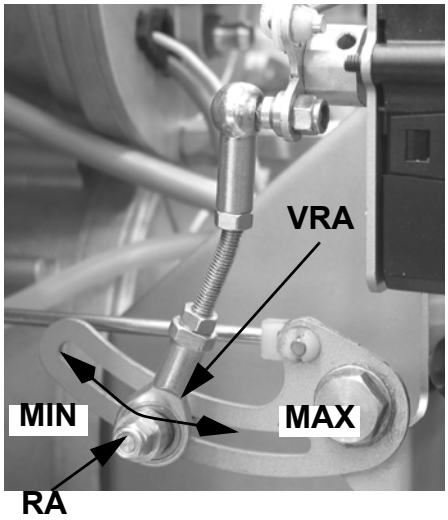

Fig. 17

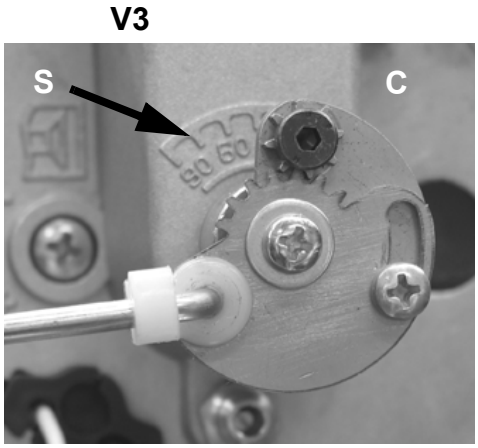

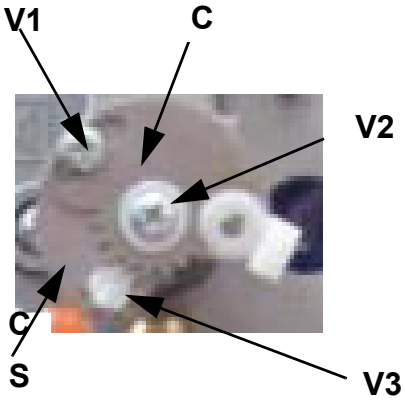

Fig. 18

Fully modulating burners

To set the air flow rate in the low flame stage and in the middle points, proceed as follows (see also pag. 29).

1 Press the **EXIT** key for 5 seconds on the modulator (pag. 30): when the LED (with the printed hand), press the arrow key to progressively move the actuator to the maximum opening position;
2 stop the stroke every time it reaches each screw **V**: to set the air rate, act on the screw that matches the bearing.
3 Press the **EXIT** key to get out of the manual mode.

Adjusting the gas valves group fo single-stage and double-stage burners

Multibloc MB-DLE

The multibloc unit is a compact unit consisting of two valves, gas pressure switch, pressure stabilizer and gas filter.

The valve is adjusted by means of the **RP** regulator after slackening the locking screw **VB** by a number of turns. By unscrewing the regulator **RP** the valve opens, screwing the valve closes. To set the fast opening remove cover **T**, reverse it upside down and use it as a tool to rotate screw **VR**. Clockwise rotation reduces start flow rate, anticlockwise rotation increases it.

Do not use a screwdriver on the screw **VR**!

The pressure stabilizer is adjusted by operating the screw **VS** located under the cover **C**. By screwing down the pressure is increased and by unscrewing it is reduced.

Note: the screw **VSB** must be removed only in case of replacemente of the coil.

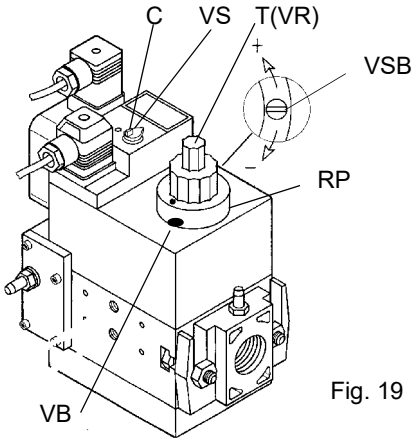

Fig. 19

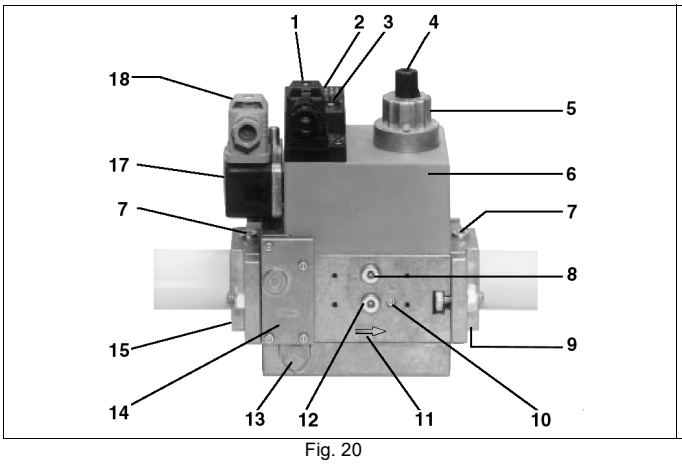

Fig. 20

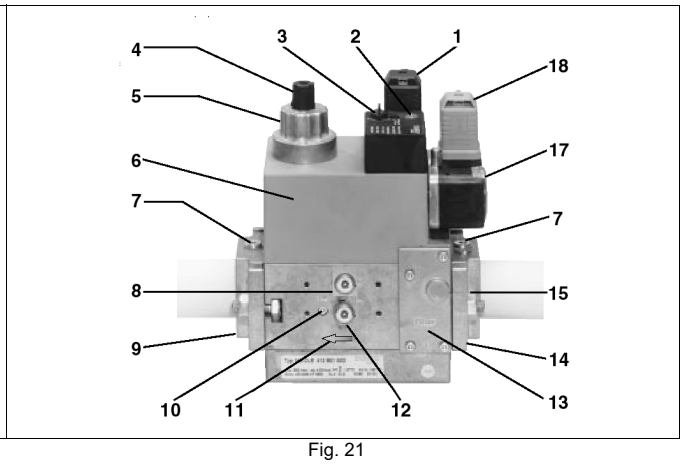

Fig. 21

Key

1 Electrical connection for valves
2 Operation display (optional)
3 Pressure governor closing tap
4 Start setting cap
5 Hydraulic brake and rate regulator
6 Coil
7 Test point connection G 1/8
8 Test point connection G 1/8 downstream of valve 1, on both sides
9 Output flange
10 Test point connection M4 downstream of valve 2
11 Gas flow direction
12 Test connection G 1/8 downstream of valve 1, on both sides
13 Vent nozzle pressure regulator
14 Filter (below cover)
15 Input flange
17 Pressure switch
18 Pressure switch electric connection

Progressive, fully-modulating burner adjustments

Progressive and fully-modulating burners are provided with the combination control KROM-SCHROEDER CG2.
Use a 2.5mm allen key to perform all the adjustments: do not use force!
The pressure switch is factory-set to 14 mbar as delivered. As far as the next adjustment see “Adjusting the air and gas pressure switches” on page 31)
Transmission ratio **V** (see pictures Fig. 22 - Fig. 23)
gas : air = 3:1
Zero point **N** = 0.

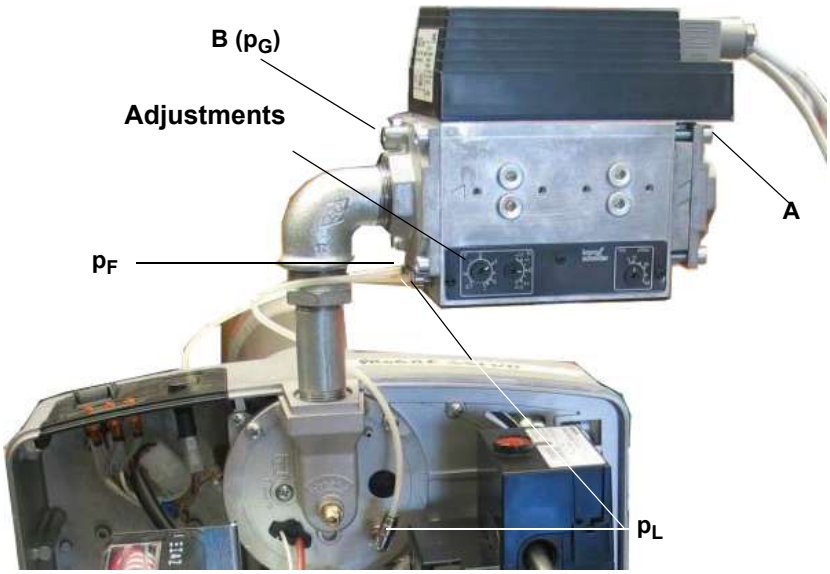

Fig. 22

1 Start burner with low fire: if the burner does not start, turn **N** (see picture Fig. 23) slightly in the direction + and repeat the start.
2 Test gas pressure $\mathbf{p_G}$ at **B** (see picture Fig. 22).
3 Test air pressure $\mathbf{p_L}$ (see picture Fig. 22) at the burner and adjust the gas pressure at **N** according to the specifications of the burner manufacturer.
4 Set the burner gradually to high fire and adjust the gas pressure at **V** (see picture Fig. 23) in accordance with the boiler input.
5 Set the air rate by means of the actuator: open the air damper until the required flow rate is achieved.

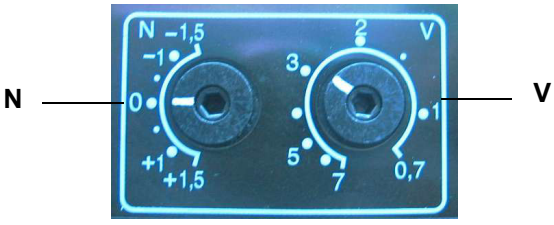

Fig. 23

Low flame adjustment
6 Set burner to low fire.
7 Carry out the flue gas analysis and set the gas pressure to the desired analysis values at the **N** port.
8 Set the burner to high fire and set the gas pressure to the desired analysis value at the **V** port.
9 Repeat analysis with low and high fire; if necessary, correct **N** and **V** (see picture Fig. 23) .
10 Finely adjust the gas pressure switch (see related paragraph).
11 Block all test points .
Do not block connection $\mathbf{p_F}$ if not used (see picture Fig. 22).

Note: air pressure $\mathbf{p_L}$ minus combustion chamber pressure $\mathbf{p_F}$ must be at least 0.4 mbar!
V = Do not set transmission ratio to high! The gas pressure at **B** is smaller than the gas pressure at **A** (see picture Fig. 22) minus the

pressure drop of the combination control.

In order to avoid the governor vibrating, keep the pressure loss across the governor as small as possible by means of a low inlet pressure or by fitting an orifice module, an adjusting valve or the like between CG ... V and burner. Setting **V** to 2 or larger will dampen the vibrations.

Testing the adjustability

1 Set burner to high fire.
2 Measure the gas pressure at **A** and **B** (see picture Fig. 22).
3 Slowly close the manual valve upstream of the combination control until the gas inlet pressure at **A** drops by 2 mbar (town gas 1 mbar).
4 The gas outlet pressure at **B** must not drop by more than 0.5 mbar. Otherwise, check and correct the setting or the choice of device.
5 If the adjustability is insufficient, the installation must not be operated.
6 Reopen the manual valve.

Gas Proving System VPS504 (Option)

The VPS504 check the operation of the seal of the gas shut off valves. This check, carried out as soon as the boiler thermostat gives a start signal to the burner, creates, by means of the diaphragm pump inside it, a pressure in the test space of 20 mbar higher than the supply pressure.

To install the DUNGS VPS504 gas proving system on the MD-DLE valves group, proceed as follows:

1 turn off gas supply.;
2 Switch off power supply.
3 remove the Multibloc's screw plugs (Fig. 8-A);
4 iInsert sealing rings (10,5 x 2,25) into VPS 504 (Fig. 9-B, Fig. 8-B)
5 Torque screws 3, 4, 5, 6 (M4 x16) Fig. 8-C

Only use screws with metric thread on reassembly (modification, repair).

6 On completion of work, perform a leak and functional test.

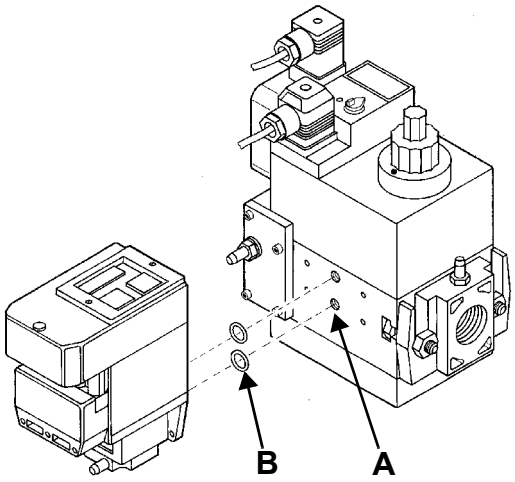

Fig. 24

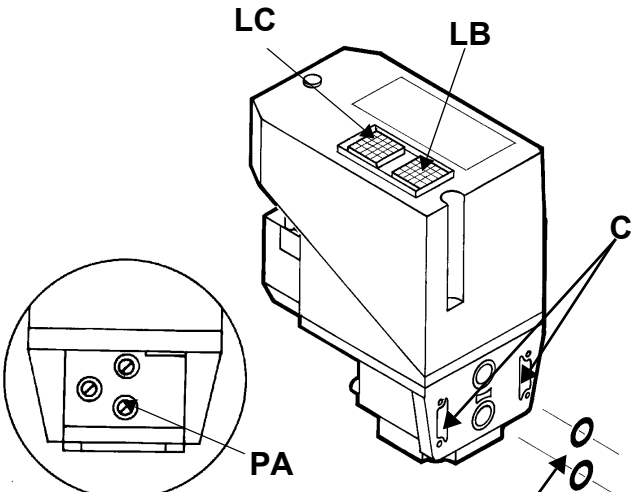

Fig. 25

When wishing to monitor the test, install a pressure gauge ranged to that of the pressure supply point **PA** (Fig. 9). If the test cycle is satisfactory, after a few seconds the consent light **LC** (yellow) comes on. In the opposite case the lockout light **LB** (red) comes on. To restart it is necessary to reset the appliance by pressing the illuminated pushbutton **LB**.

Adjusting the air and gas pressure switches

The **air pressure switch** locks the control box if the air pressure is not the one requested. If it happens, unlock the burner by means of the control box unlock pushbutton, placed on the burner control panel.

The **gas pressure switches** check the pressure to avoid the burner operate when the pressure value is not in the requested pressure range.

Adjusting the air pressure switch

To calibrate the air pressure switch, proceed as follows:

- Remove the transparent plastic cap.
- Once air and gas setting have been accomplished, startup the burner.
- During the pre-purge phase o the operation, turn slowly the adjusting ring nut **VR** in the clockwise direction until the burner lockout, then read the value on the pressure switch scale and set it to a value reduced by 15%.
- Repeat the ignition cycle of the burner and check it runs properly.
- Refit the transparent plastic cover on the pressure switch.

Calibration of low gas pressure switch

As for the gas pressure switch calibration, proceed as follows:

- Be sure that the filter is clean.
- Remove the transparent plastic cap.
- While the burner is operating at the maximum output, test the gas pressure on the pressure port of the minimum gas pressure switch.
- Slowly close the manual cutoff valve (placed upstream the pressure switch, see gas train installation diagram), until the detected pressure is reduced by 50%. Pay attention that the CO value in the flue gas does not increase: if the CO values are higher than the limits laid down by law, slowly open the cutoff valve as to get values lower than these limits.
- Check that the burner is operating correctly.
- Clockwise turn the pressure switch adjusting ring nut (as to increase the pressure value) until the burner stops.
- Slowly fully open the manual cutoff valve.
- Refit the transparent plastic cover on the pressure switch.

Adjusting the maximum gas pressure switch (when provided)

To calibrate the maximum pressure switch, proceed as follows according to its mounting position:

1 remove the pressure switch plastic cover;

2 if the maximum pressure switch is mounted upstreaam the gas valves: measure the gas pressure in the network, when flame is off; by means of the adjusting ring nut **VR**, set the value read, increased by the 30%.

3 if the maximum pressure switch is mounted downstream the “gas governor-gas valves” group and upstream the butterfly valve: light the burner, adjust it according to the procedure in the previous paragrph. Then, measure the gas pressure at the operating flow rate, downstream the “gas governor-gas valves” group and upstream the butterfly valve; by means of the adjusting ring nut **VR**, set the value read on step 2, increased by the 30%;

4 replace the plastic cover.

PART II: OPERATION

LIMITATIONS OF USE

THE BURNER IS AN APPLIANCE DESIGNED AND CONSTRUCTED TO OPERATE ONLY AFTER BEING CORRECTLY CONNECTED TO A HEAT GENERATOR (E.G. BOILER, HOT AIR GENERATOR, FURNACE, ETC.), ANY OTHER USE IS TO BE CONSIDERED IMPROPER AND THEREFORE DANGEROUS.

THE USER MUST GUARANTEE THE CORRECT FITTING OF THE APPLIANCE, ENTRUSTING THE INSTALLATION OF IT TO QUALIFIED PERSONNEL AND HAVING THE FIRST COMMISSIONING OF IT CARRIED OUT BY A SERVICE CENTRE AUTHORISED BY THE COMPANY MANUFACTURING THE BURNER.

A FUNDAMENTAL FACTOR IN THIS RESPECT IS THE ELECTRICAL CONNECTION TO THE GENERATOR'S CONTROL AND SAFETY UNITS (CONTROL THERMOSTAT, SAFETY, ETC.) WHICH GUARANTEES CORRECT AND SAFE FUNCTIONING OF THE BURNER.

THEREFORE, ANY OPERATION OF THE APPLIANCE MUST BE PREVENTED WHICH DEPARTS FROM THE INSTALLATION OPERATIONS OR WHICH HAPPENS AFTER TOTAL OR PARTIAL TAMPERING WITH THESE (E.G. DISCONNECTION, EVEN PARTIAL, OF THE ELECTRICAL LEADS, OPENING THE GENERATOR DOOR, DISMANTLING OF PART OF THE BURNER).

NEVER OPEN OR DISMANTLE ANY COMPONENT OF THE MACHINE.

OPERATE ONLY THE MAIN SWITCH, WHICH THROUGH ITS EASY ACCESSIBILITY AND RAPIDITY OF OPERATION ALSO FUNCTIONS AS AN EMERGENCY SWITCH, AND ON THE RESET BUTTON.

IN CASE OF A BURNER SHUT-DOWN, RESET THE CONTROL BOX BY MEANS OF THE RESET PUSHBUTTON. IF A SECOND SHUT-DOWN TAKES PLACE, CALL THE TECHNICAL SERVICE, WITHOUT TRYING TO RESET FURTHER.

WARNING: DURING NORMAL OPERATION THE PARTS OF THE BURNER NEAREST TO THE GENERATOR (COUPLING FLANGE) CAN BECOME VERY HOT, AVOID TOUCHING THEM SO AS NOT TO GET BURNT.

OPERATION

⚠	BEFORE STARTING UP THE BURNER, BE SURE THAT THE MAIN SWITCH IS ON AND THE MANUAL SHUTOFF VALVES ARE OPEN. CAREFULLY READ THE WARNINGS IN THIS MANUAL.

- Startup the burner by the boiler master power switch;
- as for double-stage models, turn the burner main switch **A** to On;
- make sure that the control box has not shut down and reset if necessary by means of the reset button **R** by pressing the clear rubber seal on the burner cover;
- make sure that the set of thermostats (or pressure-switches) triggers burner operation (in double-stage models **L1** LED lights on)
- the burner starting cycle begins: the control box switches on the burner fan;
- at the end of the pre-purge time, the ignition transformer switches (in double-stage models **LT** LED lights on); few seconds later the solenoid valve is powered and the burner starts up;
- the ignition transformer stays on for a few seconds after the ignition of the flame (post-ignition time) and at the end of this time it is switched off.
- **Double-stage burners:** after the start-up, the burner remains in the low flame operation (in double-stage models, **L1** on) or switches to the high flame stage (in double-stage models, **L2** on), according to the plant needs.

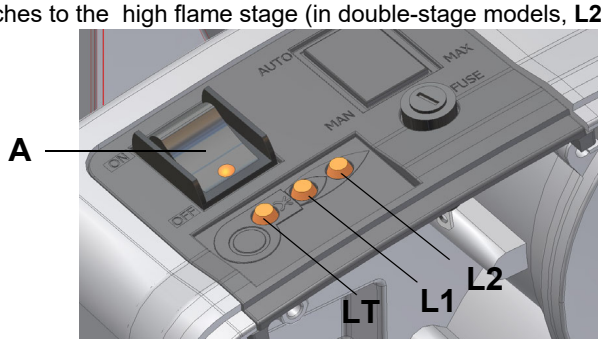

Double-stage, progressive and fully-modulating (with RWF40 burner control) models

PART III: MAINTENANCE

At least once a year carry out the maintenance operations listed below. In the case of seasonal servicing, it is recommended to carry out the maintenance at the end of each heating season; in the case of continuous operation the maintenance is carried out every 6 months.

WARNING: ALL OPERATIONS ON THE BURNER MUST BE CARRIED OUT WITH THE MAINS DISCONNECTED AND THE FUEL MANAUL CUTOFF VALVES CLOSED!

ATTENTION: READ CAREFULLY THE "WARNINGS" CHAPTER AT THE BEGINNIG OF THIS MANUAL.

ROUTINE MAINTENANCE

- Clean and examining the gas filter cartdrige, if necessary replace it (Fig. 26 on).
- Removal, examination and cleaning of the combustion head (see Fig. 33 on).
- Check the ignition and detection electrodes, clean and adjust if necessary (see page 36). In case of doubr, check the detection current according to the schemes in page 37.
- Cleaning and greasing of sliding and rotating parts.

ATTENTION: when servicing, if it was necessary to disassemble the gas train parts, remember to execute the gas proving test, once the gas train is reassembled, according to the procedure imposed by the law in force.

Removing the filter in the MULTIBLOC DUNGS MB-DLE 405..412

- Check the filter at least once a year!
- Change the filter if the pressure difference between pressure connection 1 and 3 (Fig. 26-Fig. 27)is $\Delta p > 10$ mbar.
- Change the filter if the pressure difference between pressure connection 1 and 3 (Fig. 26-Fig. 27) is twice as high compared to the last check.

You can change the filter without removing the fitting.

1 Interrupt the gas supply closing the on-off valve.
2 Remove screws 1 ÷ 4 using the Allen key n. 3 and remove filter cover 5 in Fig. 28.
3 Remove the filter 6 and replace with a new one.
4 Replace filter cover 5 and tighten screws 1 ÷ 4 without using any force and fasten.
5 Perform leakage and functional test, $p_{max.}$ = 360 mbar.
6 Pay attention that dirt does not fall inside the valve.

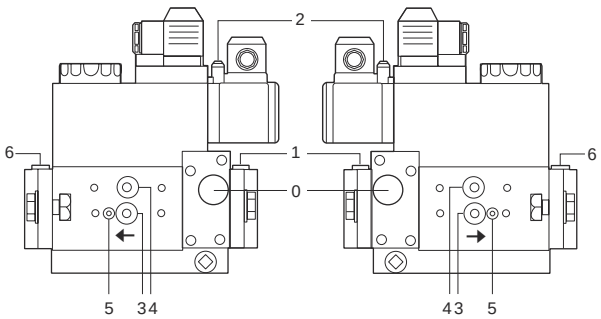

Fig. 26

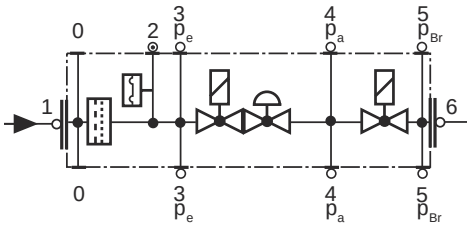

Fig. 27

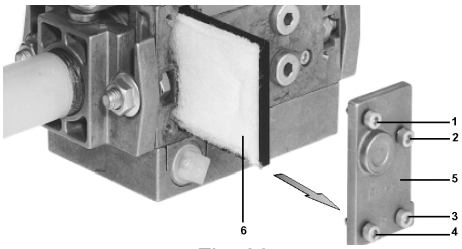

Fig. 28

Removing the filter in the MULTIBLOC DUNGS MB-DLE 415 - 420 B01 1” 1/2 - 2”

- Check the filter at least once a year!
- Change the filter if the pressure difference between pressure connection 1 and 2 (Fig. 29-Fig. 30) $\Delta p > 10$ mbar.
- Change the filter if the pressure difference between pressure connection 1 and 2 (Fig. 29-Fig. 30) is twice as high compared to the last check.

You can change the filter without removing the fitting.

1 Interrupt the gas supply closing the on-off valve.
2 Remove screws 1 ÷ 6 (Fig. 31).
3 Change filter insert.
4 Re-insert filter housing, screw in screws 1 ÷ 6 without using any force and fasten.
5 Perform leakage and functional test, $p_{max.}$ = 360 mbar.
6 Pay attention that dirt does not fall inside the valve.

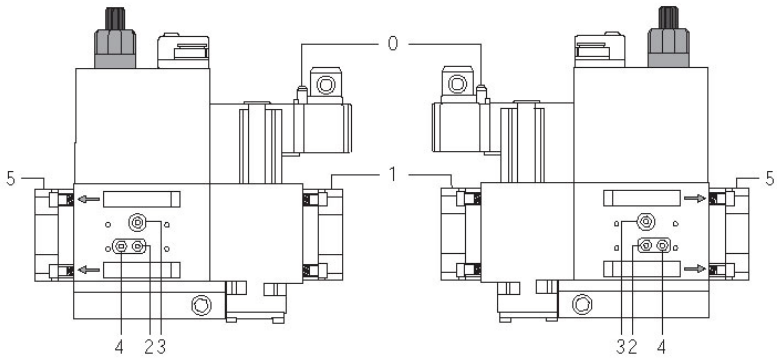

Fig. 29

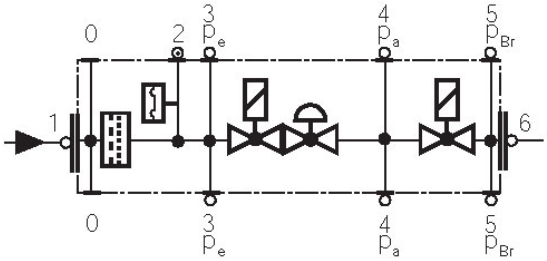

Fig. 30

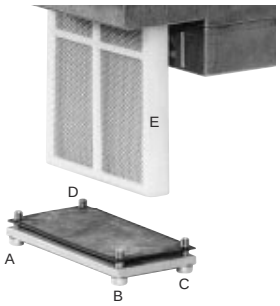

Fig. 31

Cleaning or replacing the Krom-Scroeder CG2 25 V valve filter

Once a year check the valve filter:

1 close manual valve
2 Loosen all 4 screws (1 in Fig. 32); unscrew two of them depending on the room available and pull out filter unit (2 in Fig. 32)
3 Clean or replace filter pad and strainer and refit.
4 Check connection flanges for tightness. Soap sealings.

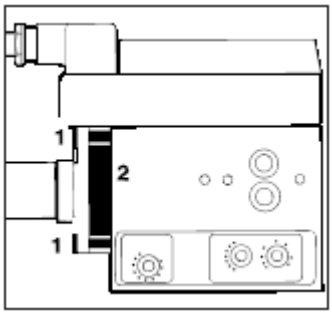

Fig. 32

Disassembling the burner plate to service the burner fan

Before proceeding to maintenance/replacing operations, follow the next procedure:

1 remove the component plate "C" by unscrewing the V1, V2, V3, V4 screws and the "F" securing pin (Fig. 33);
2 remove the rubber cable holder by unscrewing **V5** and **V6** in Fig. 34;
3 free rod **T** (see Fig. 35);
4 disconnect the connector **CV**, Fig. 37;
5 place the plate in one of the ways showed in order to facilitate maintenance operations.

NOTE: When re-assembling the component plate, make sure that the pin for the air damper "P" enters its housing "B" (see picture below).

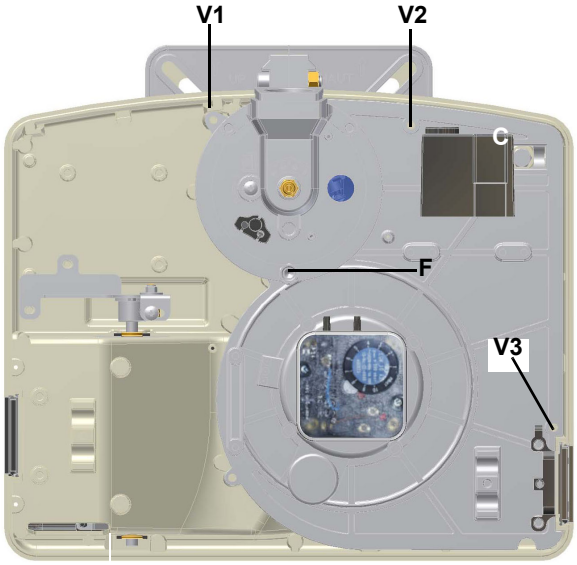

Fig. 33

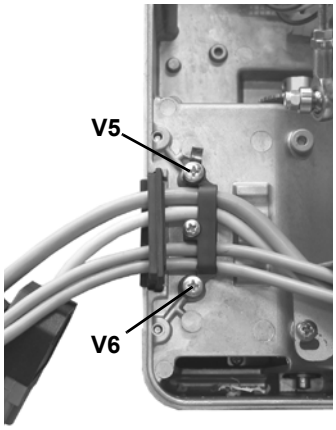

Fig. 34

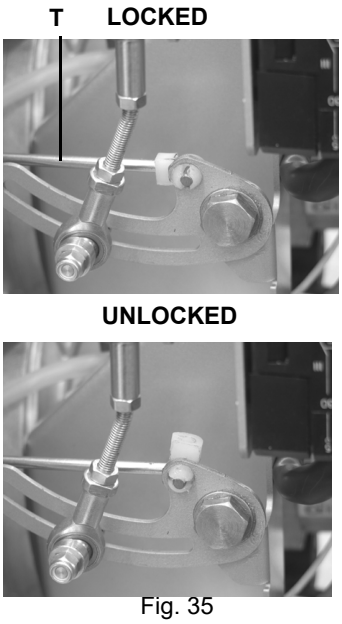

Fig. 35

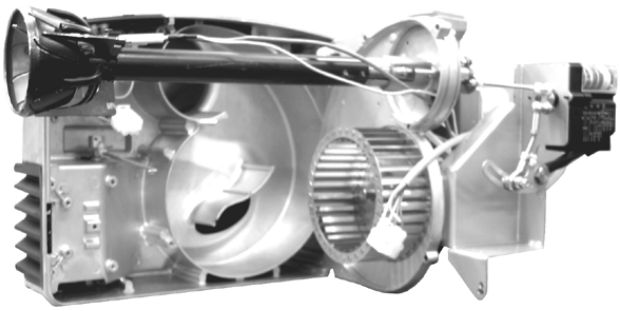

Fig. 36

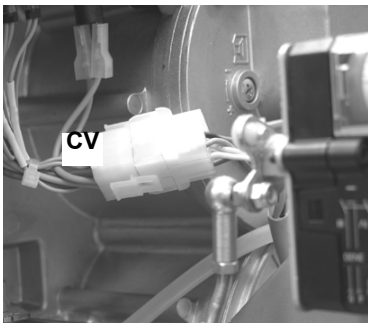

Fig. 37

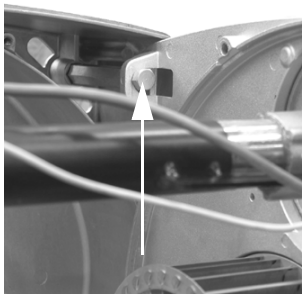

Fig. 38

Removing the combustion head

ATTENTION: avoid the ignition and detection electrodes to get in touch with metallic parts (blast tube, head, etc.), otherwise the boiler's operation would be compromised. Check the electrodes position after any intervention on the combustion head. The gap between the ignition electrode and the ground is **4÷5 mm**.

To remove the combustion head, proceed as follows:

1 remove the burner cover;
2 unscrew the **VT** fixing screws;
3 disconnect the ignition cable **CA**; unscrew the fixing nuts **D** and shift the combustion head off its housing;
4 adjust the electrodes: to replace them, if necessary, disconnect the cables and unscrew **VE**;
5 remove the electrodes and replace them;
6 to clean the combustion head, use a vacuum cleaner; to scrape off the scale use a metallic brush;
7 replace all the items reversing the procedure.

CAUTION: during the assembling phase, before tightening screws V1, V2, V3, mount and tighten screws S1 and S2.

After the disassembling the burner plate, the combustion head can be removed as follows:

1 unscrew the fixing screwa **VT**;
2 disconnect the ignition cable **CA**; unscrew the fixing nuts **D** and remove the combustion head from its housing;
3 adjust the electrodes; to replace them, if necessary, disconnect the cables and unscrew **VE**;
4 remove the electrodes and replace them
5 clean the combustion head by means of a vacuum cleaner; use a metallic brush to scrape off the scale;
6 reassemble all the items in the reversed order, observing the electrodes position (see next paragraph)

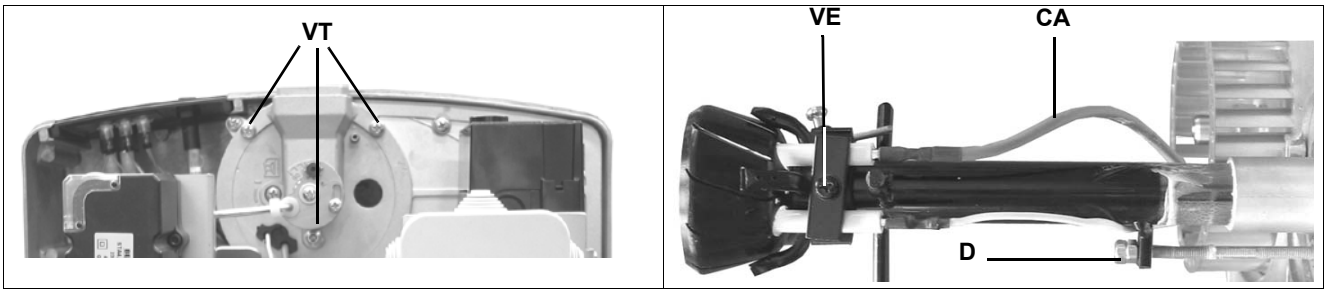

Correct electrodes positioningTo get a good ignition, it is necessary to observe the measures shown in the next pictures. Be sure to fasten the electrodes fixing screw **VE**, before reassembling the burner.

Standard burners

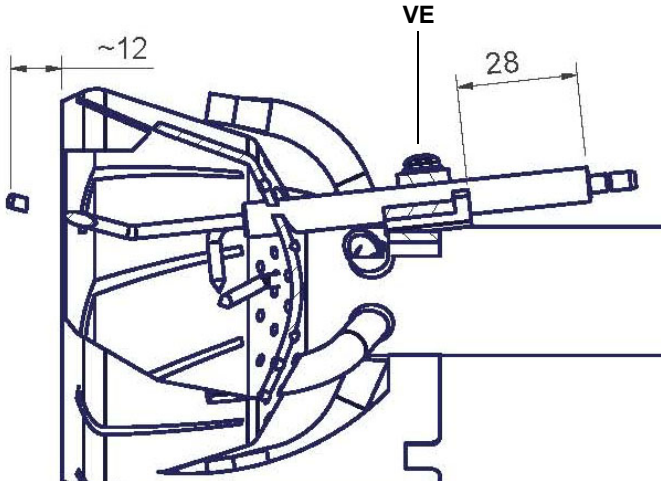

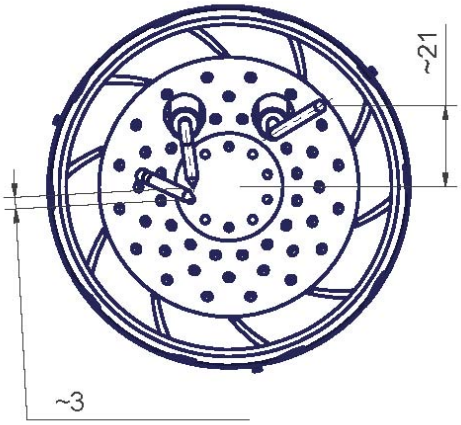

Low NOx burners

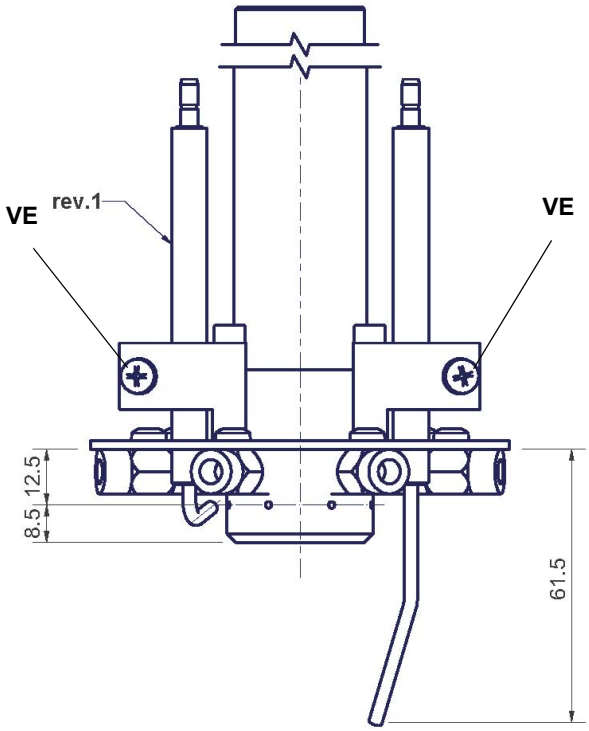

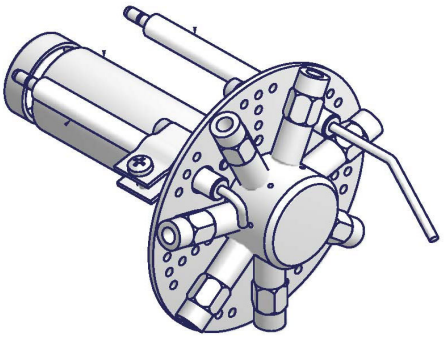

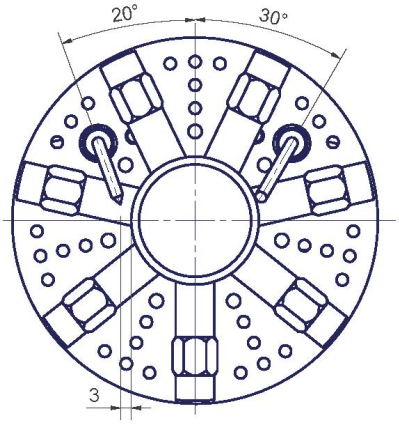

Checking the detection current

If the burner locks, execute the following inpesctions. To measure the detection signals refer to the diagrams in the following picture. If the signal is less than the value shown, check the position of the detection electrode, the electrical contacts and if necessary replace the detection electrode.

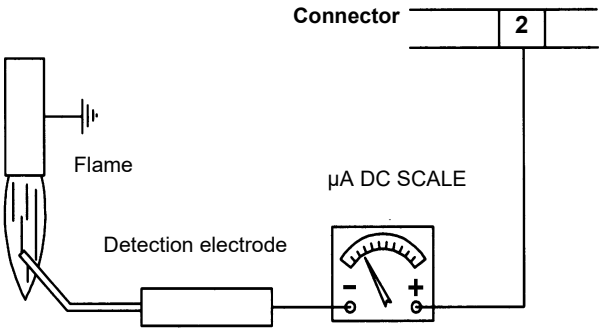

Control box	Minimum detection signal
Siemens LME21-22	3 µA

Fig. 39

Seasonal stop

To stop the burner in the seasonal stop, proceed as follows:

1 turn the burner's main switch to 0 (Off position)
2 disconnect the power mains
3 close the fuel cock of the supply line

Burner disposal

In case of disposal, follow the instructions according to the laws in force in your country about the "Disposal of materials".

TROUBLESHOOTING

CAUSE	TROUBLE											
	THE BURNER DOESN'TSTART	CONTINUE WITH PRE-PURGE	DOESN'T START AND LOCK-OUT	DOESN'T START AND REPEATS THE CYCLE	STARTS AND REPEATS THE CYCLE	STARTS AND LOCK-OUTB	THE FLAME MONITOR DEVICE DOESN'T GIVECONSENT TO START	DOESEN'T SWITCH TO HIGH FLAME	DOESEN'T RETURN IN LOW FLAME	HE SERVO CONTROL IS LOCK AND VIBRATE	LOCK-OUT DURING OPERATION	TURNS OF AND REPEATS CYCLE DURING OPERATION
MAIN SWITCH OPEN	●											
LACK OF GAS	●			●								
MAXIMUM GAS PRESSURE SWITCH DEFECTIVE (IF PROVIDED)	●		●									
THERMOSTATS/PRESSURE SWITCHES DEFECTIVE	●			●								●
OVERLOAD TRIPPED INTERVENTION	●											
AUXILIARIES FUSE INTERRUPTED	●											
CONTROL BOX FAULTY	●	●	●			●					●	
DEFECTIVE SERVOCONTROL (IF PROVIDED)	●	●	●				♦					
AIR PRESSURE SWITCH FAULT OR BAD SETTING	●					●	●				●	
MINIMUM GAS PRESSURE SWITCH DEFECTIVE OR GAS FILTER DIRTY	●			●	●		●					●
IGNITION TRANSFORMER FAULT			●									
IGNITION ELECTRODES BAD POSITION			●									
DETECTION ELECTRODE BAD POSITION						●					●	
BUTTERFLY VALVE BAD SETTING			●			●						
DEFECTIVE GAS GOVERNOR			●	●	●							●
GAS VALVE DEFECTIVE			●									
BAD CONNECTION OR DEFECTIVE HIGH/LOW FLAME THERMOSTAT OR PRESSURE SWITCH (IF PROVIDED)							♦	●	●	♦		
WRONG SETTING SERVO CONTROL CAM							l	l	l			
UV PROBE DIRTY OR DEFECTIVE (IF PROVIDED)			l			l					l	
PHASE-NEUTRAL INVERTED						s						
PHASE-PHASE SUPPLY OR PRESENCE OF VOLTAGE ON THE NEUTRAL CONDUCTOR(*)						s						

l = with any control box;
s = with only LGB2../LMG2../LME11/LME2..
(*) In such cases, insert the circuit SIEMENS “RC466890660” ()See chapter “Electrical connections”)

SPARE PARTS

Desription	Code		
	LG/NG120	LG/NG140	LG/NG200
COVER	1011807	1011807	1011807
CONTROL BOX (one-stage regulation)	2020466	2020467	2020467
CONTROL BOX (double-stage regulation)	-	2020468	2020468
DETECTION ELECTRODE	2080108	2080108	2080108
GROUND ELECTRODE	2080234	2080234	2080234
INGNITION ELECTRODE	2080218	2080218	2080218
GASKET	2110031	2110031	2110031
FAN WHEEL	2150077	2150077	2150076
AIR PRESSURE SWITCH	2160053	2160053	2160053
DANFOSS TRANSFORMER	2170233	2170233	2170233
COFI TRANSFORMER	2170138	2170138	2170138
MOTOR mod. AACO	2180296	2180296	2180296
MOTOR mod. AEG	2180715	2180715	2180715
VALVE GROUP DUNGS MB-DLE 405 (1/2”)	2190339	-	-
VALVE GROUP DUNGS MB-DLE 407 (3/4”)	-	2190340	2190340
VALVE GROUP DUNGS MB-DLE 410 (1”)	-	2190341	2190341
VALVE GROUP KROM-SCHROEDER CG2..V (1”) - (bruc.progressivi/modulanti)	-	2190262	2190262
GAS PROVING SYSTEM (option)	2191604	2191604	2191604
ACTUATORE (double-stage models only) - BERGER STA	-	2480057	2480057
progressivi/modulantiACTUATORE (double-stage models only) - BERGER STA	-	2480074	2480074
ACTUATORE (double-stage models only) - SIEMENS SQN72	-	24800A3	24800A3
BLAST TUBE (S*)	30900H4	30900H4	30900H6
BLAST TUBE (L*)	30900H5	30900H5	30900H7
COMBUSTION HEAD (natural gas) (S*)	30600M0	30600M0	30600M2
COMBUSTION HEAD (natural gas) (L*)	30600M1	30600M1	30600M3
COMBUSTION HEAD (L.P.G.)(S*)	30600M4	30600M4	30600M6
COMBUSTION HEAD (L.P.G.) (L*)	30600M5	30600M5	30600M7
COMBUSTION HEAD WITH ELECTRODES (S*)	3501847	3501847	3501849
COMBUSTION HEAD WITH ELECTRODES (L*)	3501848	3501848	3501850
COMBUSTION HEAD WITH ELECTRODES (L.P.G.) (S*)	3501857	3501857	3501859
COMBUSTION HEAD WITH ELECTRODES (L.P.G.) (L*)	3501858	3501858	3501860
INGNITION CABLE	6050154	6050154	6050154
DETECTION CABLE	6050211	6050216	6050211
DETECTION CABLE	-	6050216	6050216

- **Other spare parts for Low NOx series**

Desription	Code	
	NGX120	NGX200
INGNITION ELECTRODE	2080290	2080290
BLAST TUBE (S*	30910N2	30910N4
BLAST TUBE (L*)	30910N3	30910N5
COMBUSTION HEAD LOW NOx (S*)	30600T7	30600T6
COMBUSTION HEAD LOW NOx (L*)	30600V8	30600S9
COMBUSTION HEAD WITH ELECTRODES) LOW NOx (S*	3501853	3501855
COMBUSTION HEAD WITH ELECTRODES LOW NOx (L*)	3501854	3501856

*S: standard blast tube

*L: extended blast tube

NOTE: it is recommended to mention the burner ID number on the spare parts request form.

SINGLE-STAGE BURNER EXPLODED VIEW

	DESCRIPTION
1.1	HALF FLANGE
1.2	HALF FLANGE
2	BLAST TUBE
3.1	COVER FIXING SCREW
3.2	COVER
3.3	UNLOCK BUTTON RUBBER COVER
4.1	INDEX BLOCKING SCREW
4.2	INDEX HOLDER
4.3	BUSH
4.4	SCREW
4.5	SELF-BLOCKING NUT
4.6	WASHER
4.7	WASHER
5.1	EXTENSION SCREW
5.2	GAS PRESSURE INTAKE
5.3	ÎELBOW
5.4	REDUCTION
5.5	VALVE GROUP
5.6	VALVE GROUP FLANGE
6	CONTROL BOX
7.1	HOUSING
7.2	BOX ASSEMBLY
7.3	4-WAYS FAIRLEAD
7.4	AIR DAMPER ASSEMBLY
7.5	AIR FLAP
7.6	BUSH
7.7	BUSH
7.8	AIR DAMPER PIN
7.9	PLATE SRVICING PIN
8	GASKET
9.1	MOTOR PLATE
9.2	FAN WHEEL
9.3	AIR PRESSURE SWITCH
9.4	MOTOR
9.5	PLATE FIXING PIN
9.6	AIR PRESSURE SITCH BRACKET
10.1	BRACKET
10.2	CONTROL BOX BOARD
10.3	TRANSFORMER
11.1	NUT
11.2	FAIRLEAD
11.3	GAS PRESSURE INTAKE
11.4	INSPECTION GLASS
11.5.1	COMBUSTION HEAD
11.5.2	DETECTION ELECTRODE
11.5.3	INGNITION ELECTRODE
11.6	INGNITION CABLE
11.7	SCREW
11.8	NUT
11.9	FLANGE
12	TERMINAL
13	TERMINAL

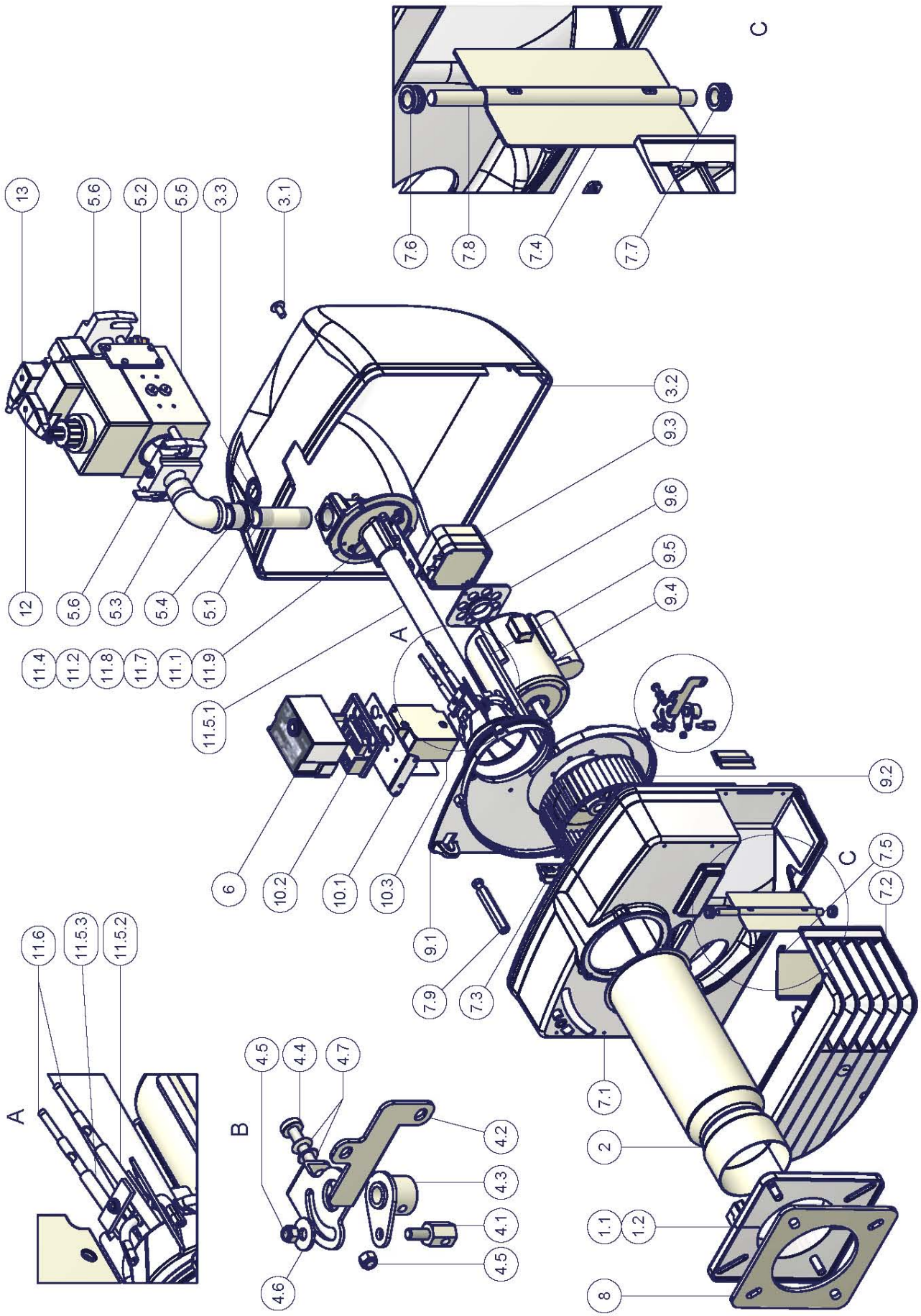
13
5.6
5.2
5.5
3.3
3.1
7.6
7.8
7.4
7.7
C
12
5.6
5.3
5.4
5.1
3.2
9.3
9.6
9.5
9.4
11.4
11.2
11.8
11.7
11.1
11.9
A
11.5.1
6
10.2
10.1
10.3
9.1
7.9
7.3
9.2
C
7.5
7.2
7.1
2
1.1
1.2
8
11.6
11.5.3
11.5.2
A
B
4.5
4.4
4.7
4.6
4.2
4.3
4.1
4.5

DOUBLE-STAGE BURNER EXPLODED VIEW

	DESCRIPTION
1.1 - 1.2	HALF FLANGE
2	BLAST TUBE
3.1	COVER FIXING SCREW
3.2	COVER FIXING SCREWCOVER
3.3	UNLOCK BUTTON RUBBER COVERUNLOCK BUTTON RUBBER COVER
4.1	INDEX BLOCKING SCREW
4.2	GAS PRESSURE INTAKE
4.3	ELBOW
4.4	REDUCTION
4.5	VALVE GROUP
4.6	VALVE GROUP FLANGE
5	FAIRLEAD
6	CONTROL BOX
7.1	HOUSING
7.2	BOX ASSEMBLY
7.3	4-WAYS FAIRLEAD
7.4	AIR DAMPER ASSEMBLY
7.5	AIR FLAP
7.6	BUSH
7.8 - 7.9	PINS
7.10	ROD
7.11	BUSH
8	GASKET
9.1	WASHER
9.2 - 9.3	SCREWS
9.4	ACTUATOR BRACKET
9.5	SPACERS
9.6	ACTUATOR
9.7	ROD
9.8 - 9.9	JOINT
9.10	BRACKET
9.11	BUSH
9.12	AIR DMAPER CAM
10.1	MOTOR PLATE
10.2	FAN WHEEL
10.3	AIR PRESSURE SWITCH
10.4	MOTOR
10.5	PLATE FIXING PIN
10.6	AIR PRESSURE SWITCH BRACKET
11	PANEL ASS.Y
12.1	BRACKET
12.2	CONTROL BOX HOLDER
12.3	IGNITION TRANSFORMER
12.4	EARTHING PLATE
12.5	PBC
13.1	NUT
13.2	FAIRLEAD
13.3	INSPECTION GLASS
13.4.1	COMBUSTION HEAD
13.4.2	DETECTION ELECTRODE
13.4.3	INGNITION ELECTRODE
13.5	
13.6	DETECTION CABLES
13.7	SCREW
13.8	NUT
13.9	FLANGE
14 - 15	CONNECTOR

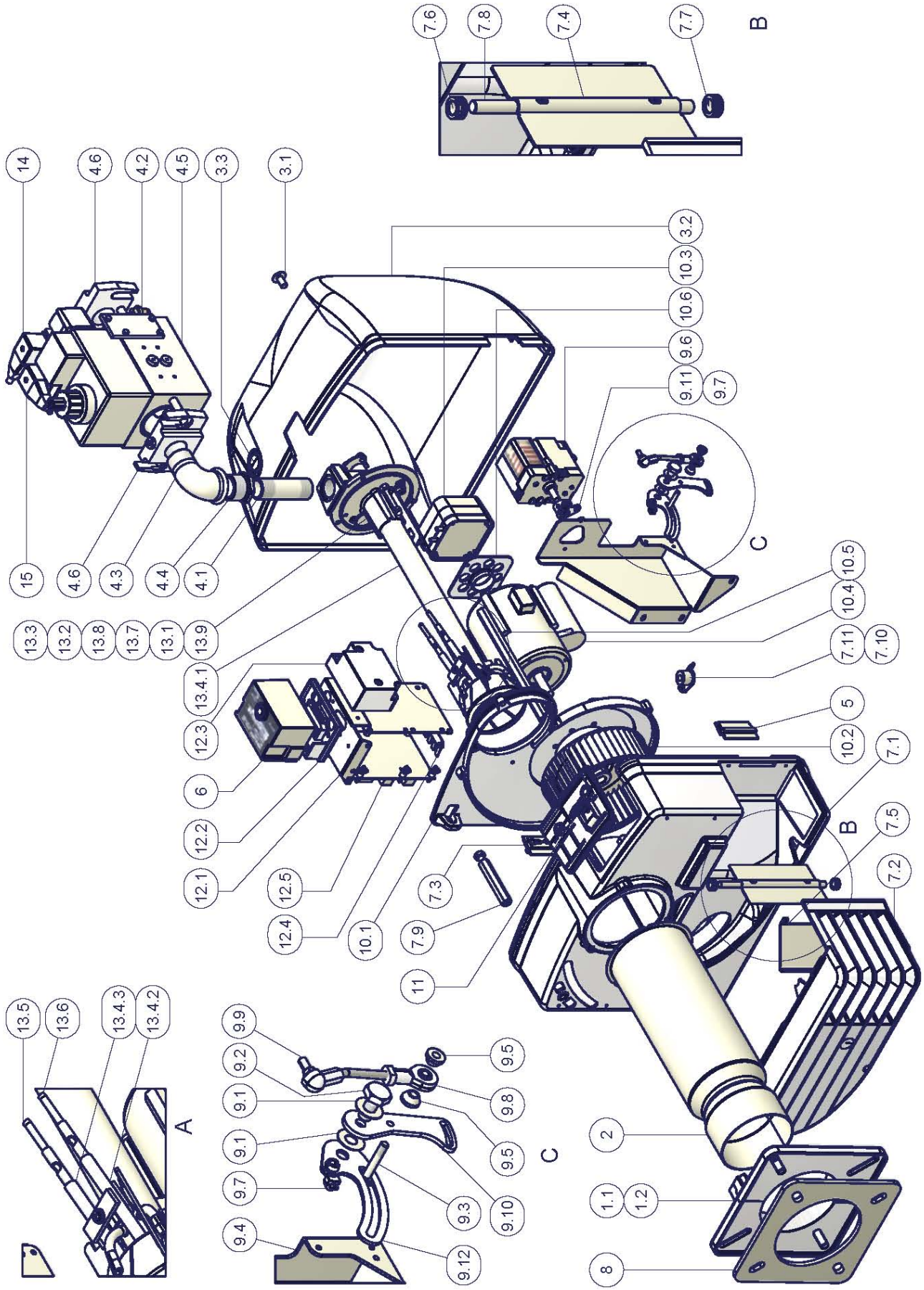
14
4.6
4.2
4.5
3.3
3.1
7.6
7.8
7.4
7.7
B
3.2
10.3
10.6
9.6
9.11
9.7
C
15
4.6
4.3
4.4
4.1
13.3
13.2
13.8
13.7
13.1
13.9
13.4.1
12.3
6
12.2
12.1
12.5
12.4
10.1
7.3
7.9
11
10.5
10.4
7.11
7.10
5
10.2
7.1
B
7.5
7.2
13.5
13.6
13.4.3
13.4.2
A
9.9
9.2
9.1
9.1
9.7
9.4
9.5
9.8
9.5
9.3
9.10
9.12
C
2
1.1
1.2
8

WIRING DIAGRAMS

Complete key

C1	Operation time counter first stage
C2	Operation time counter second stage
CO	Operation time counter
ER	Flame detection electrode
EV1	Gas network side solenoid valve (or valves group)
EV2	Burner side solenoid valve (or valves group)
F	Fuse
FR	Photoresistor
FU2-FU3	Line fuse
IG	Main switch
IL	Line switch
L	Phase
LAF-LAF1	Burner in high flame operation light
LB	Flame lockout light
LBF	Burner in low flame operation light
LF	Burner in operation signaling light
LME	SIEMENS control box
LTA	Ignition transformer operation light
MA	Burner supply terminal board
MV	Fan motor
N	Neutral
PA	Air pressure switch
PG	Minimum gas pressure switch
PS	Reset pushbutton for flame control device
SATRONIC DK0976-DKW976	Control box
SATRONIC DKW972	Control box
ST	Group of thermostats or pressure switches
STA4.5B0.37/63N21L	BERGER actuator for air damper
SW1	Second stage pushbutton
TA	Ignition transformer
TAB	High-low flame thermostat (if fitted remove the bridge between terminals 6 and 7 on terminal board MA)
TS	Safety thermostat or pressure switch on boiler
VPS	Dungs gas proving system (optional)

Note: connect the bridge between terminals 7 and 9, only if LGB21.33 is used

ACTUATOR CAMS

SIEMENS SQN30.151	BERGER STA6BB3.41	SIEMENS SQN70.224A20	BERGER STA4.5B0.37 STA13B0.36	
I	ST2	RED	I	high flame
II	ST0	BLUE	II	stand by
III	ST1	ORANGE	IV	low flame
V	MV	BLACK	III	Not used

WARNING:

1 - Power supply 230V 50/60Hz 2N a.c.
2 - Don’t reverse phase with neutral
3 - Be sure the burner is properly hearted

Wiring diagram cod. 01-319 - Single stage burners

Wiring diagram 18-069 - High-Low flame / progressive burners

Wiring diagram 18-166 - Fully modulating burners

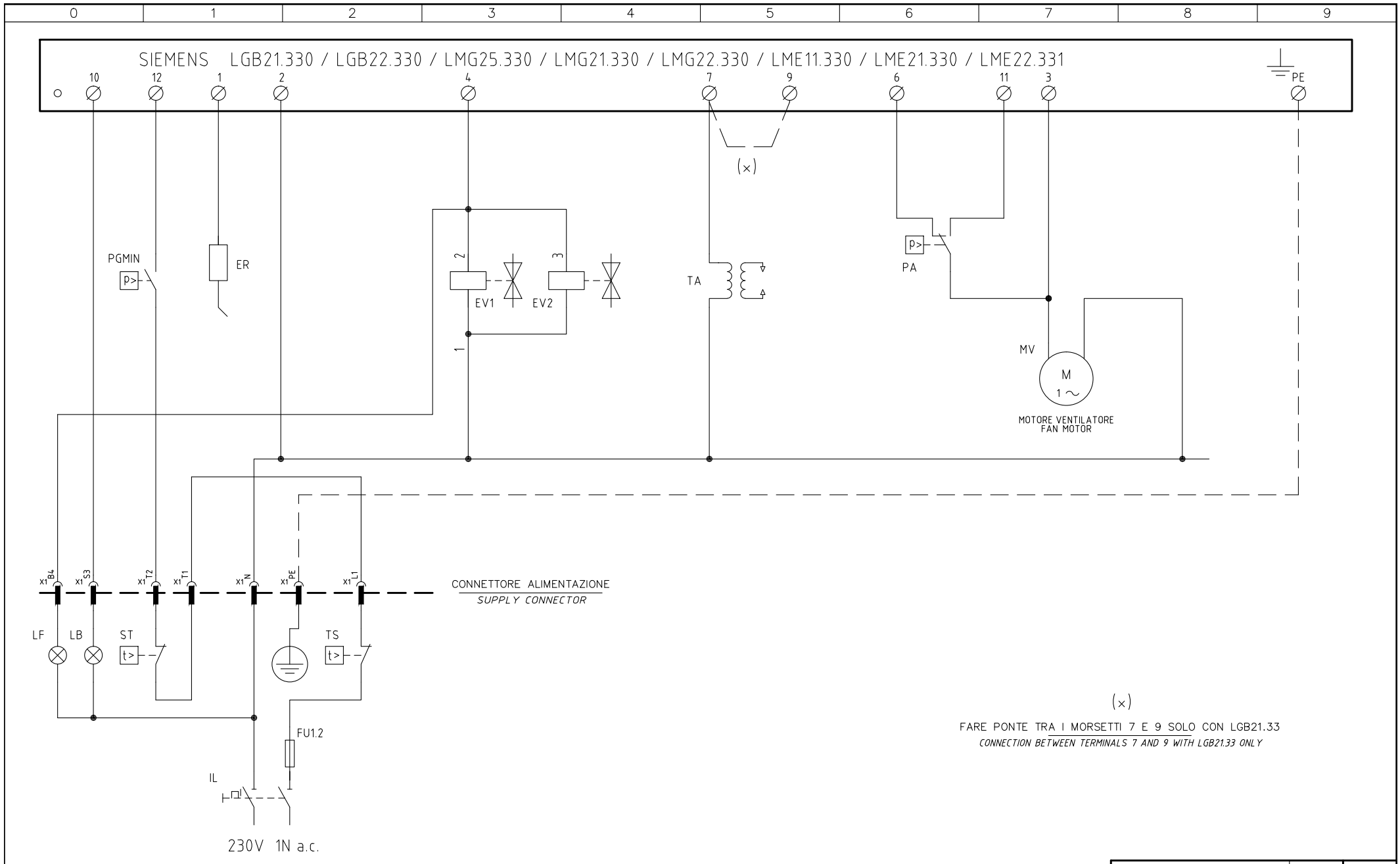

Data 06/02/1996		PREC.	FOGLIO
Revisione 05		/	1
Dis. N. 01 – 319		SEGUE	TOTALE
		2	2

0	1	2	3	4	5	6	7	8	9

Sigla / Item	Descrizione	Description
ER	ELETTRODO RILEVAZIONE FIAMMA	FLAME DETECTION ELECTRODE
EV1	ELETTROVALVOLA GAS LATO RETE (O GRUPPO VALVOLE)	UPSTREAM GAS SOLENOID VALVE (OR VALVES GROUP)
EV2	ELETTROVALVOLA GAS LATO BRUCIATORE (O GRUPPO VALVOLE)	DOWNSTREAM GAS SOLENOID VALVE (OR VALVES GROUP)
FU1.2	FUSIBILE DI LINEA	LINE FUSE
IL	INTERRUTTORE GENERALE	MAINS SWITCH
LB	LAMPADA SEGNALAZIONE BLOCCO BRUCIATORE	INDICATOR LIGHT FOR BURNER LOCK-OUT
LF	LAMPADA SEGNALAZIONE FUNZIONAMENTO BRUCIATORE	INDICATOR LIGHT BURNER OPERATION
LGB.. / LMG.. / LME..	APPARECCHIATURA CONTROLLO FIAMMA	CONTROL BOX
MV	MOTORE VENTILATORE	FAN MOTOR
PA	PRESSOSTATO ARIA	AIR PRESSURE SWITCH
PGMIN	PRESSOSTATO GAS DI MINIMA PRESSIONE	MINIMUM GAS PRESSURE SWITCH
ST	SERIE TERMOSTATI/PRESSOSTATI	SERIES OF THERMOSTATS OR PRESSURE SWITCHES
TA	TRASFORMATORE DI ACCENSIONE	IGNITION TRANSFORMER
TS	TERMOSTATO/PRESSOSTATO DI SICUREZZA	SAFETY THERMOSTAT OR PRESSURE SWITCH

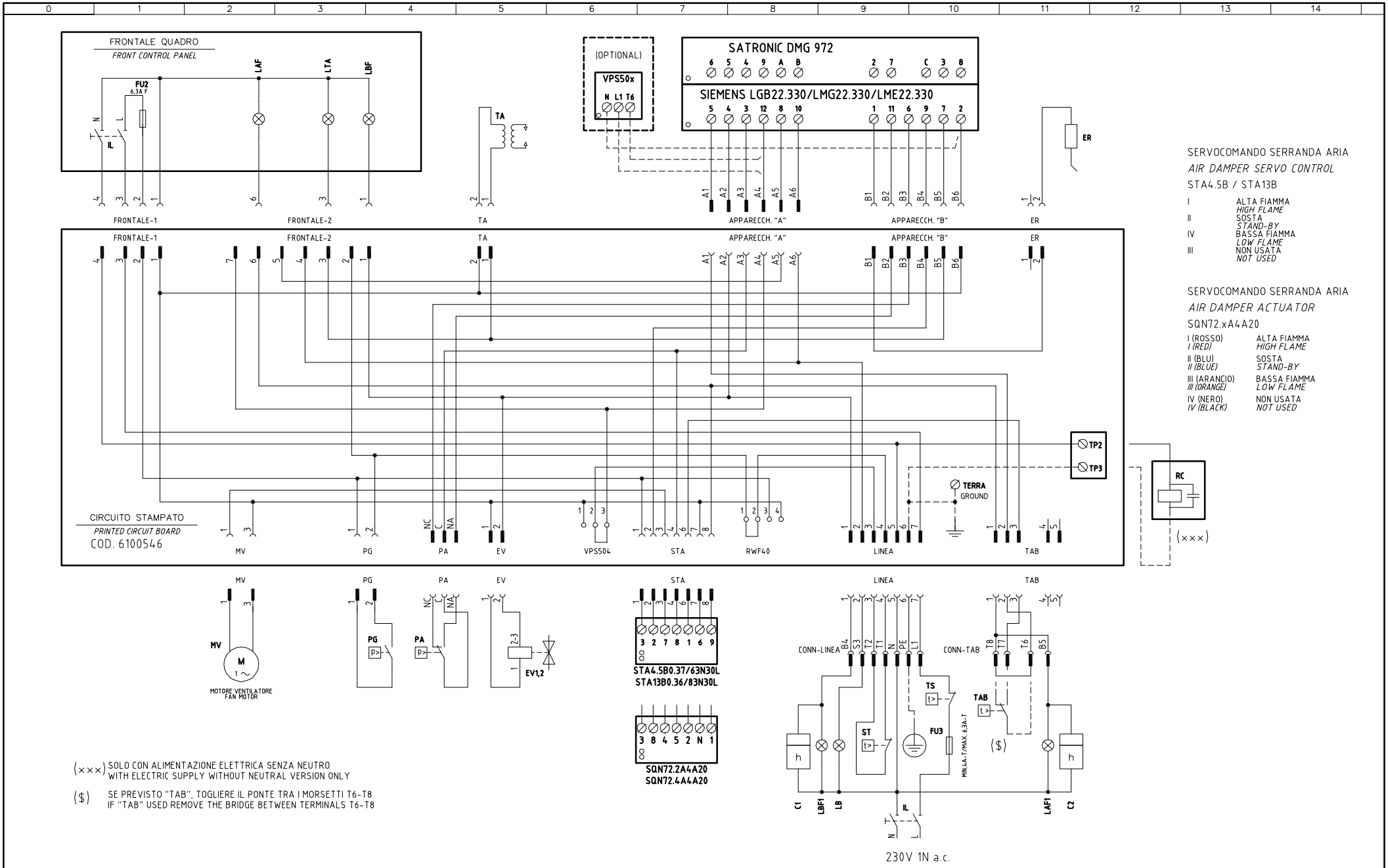

SERVOCOMANDO SERRANDA ARIA
AIR DAMPER SERVO CONTROL
STA4.5B / STA13B

I	ALTA FIAMMA *HIGH FLAME*
II	SOSTA *STAND-BY*
IV	BASSA FIAMMA *LOW FLAME*
III	NON USATA *NOT USED*

SERVOCOMANDO SERRANDA ARIA
AIR DAMPER ACTUATOR
SQN72.xA4A20

I (ROSSO) *I (RED)*	ALTA FIAMMA *HIGH FLAME*
II (BLU) *II (BLUE)*	SOSTA *STAND-BY*
III (ARANCIO) *III (ORANGE)*	BASSA FIAMMA *LOW FLAME*
IV (NERO) *IV (BLACK)*	NON USATA *NOT USED*

(×××) SOLO CON ALIMENTAZIONE ELETTRICA SENZA NEUTRO
WITH ELECTRIC SUPPLY WITHOUT NEUTRAL VERSION ONLY

($) SE PREVISTO "TAB", TOGLIERE IL PONTE TRA I MORSETTI T6-T8
IF "TAB" USED REMOVE THE BRIDGE BETWEEN TERMINALS T6-T8

Data	17/10/2005	PREC.	FOGLIO
Revisione	03	/	1
Dis. N.	18 – 069	SEGUE	TOTALE
		2	2

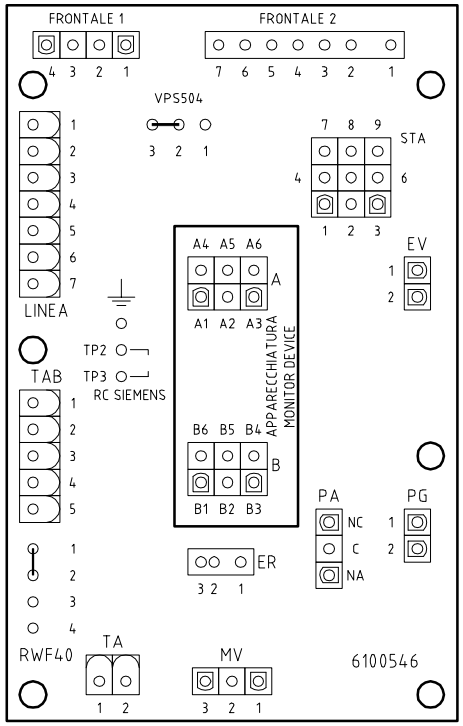

SIGLA/ITEM	FUNZIONE	FUNCTION
C1	CONTAORE BASSA FIAMMA	LOW FLAME TIME METER
C2	CONTAORE ALTA FIAMMA	HIGH FLAME TIME METER
ER	ELETTRODO RIVELAZIONE FIAMMA	FLAME DETECTION ELECTRODE
EV1,2	ELETTROVALVOLE GAS (O GRUPPO VALVOLE)	GAS ELECTRO-VALVES (OR VALVES GROUP)
FU2	FUSIBILE DI LINEA	LINE FUSE
FU3	FUSIBILE LINEA BRUCIATORE	BURNER LINE FUSE
IL	INTERRUTTORE LINEA BRUCIATORE	BURNER LINE SWITCH
IL	INTERRUTTORE LINEA AUSILIARI	AUXILIARY LINE SWITCH
LAF	LAMPADA SEGNALAZIONE ALTA FIAMMA BRUCIATORE	BURNER IN HIGH FLAME INDICATOR LIGHT
LAF1	LAMPADA SEGNALAZIONE ALTA FIAMMA BRUCIATORE	BURNER IN HIGH FLAME INDICATOR LIGHT
LGB22.330/LMG22.330/LME22.330	APPARECCHIATURA CONTROLLO FIAMMA	FLAME MONITOR DEVICE
LB	LAMPADA SEGNALAZIONE BLOCCO BRUCIATORE	INDICATOR LIGHT FOR BURNER LOCK-OUT
LBF	LAMPADA SEGNALAZIONE BASSA FIAMMA BRUCIATORE	BURNER IN LOW FLAME INDICATOR LIGHT
LBF1	LAMPADA SEGNALAZIONE BASSA FIAMMA BRUCIATORE	BURNER IN LOW FLAME INDICATOR LIGHT
LTA	LAMPADA SEGNALAZIONE TRASFORMATORE DI ACCENSIONE	IGNITION TRANSFORMER INDICATOR LIGHT
MV	MOTORE VENTILATORE	FAN MOTOR
PA	PRESSOSTATO ARIA COMBURENTE	COMBUSTION AIR PRESSURE SWITCH
PG	PRESSOSTATO GAS DI MINIMA PRESSIONE	MINIMUM GAS PRESSURE SWITCH
RC	CIRCUITO RC	RC CIRCUIT
SATRONIC DMG 972	APPARECCHIATURA CONTROLLO FIAMMA	FLAME MONITOR DEVICE
SQN72.xA4A20	SERVOCOMANDO SERRANDA ARIA (ALTERNATIVO)	AIR DAMPER SERVO CONTROL (ALTERNATIVE)
ST	SERIE TERMOSTATI/PRESSOSTATI	SERIES OF THERMOSTATS OR PRESSURE SWITCHES
STA4.5 / STA13B	SERVOCOMANDO SERRANDA ARIA	AIR DAMPER SERVO CONTROL
TA	TRASFORMATORE DI ACCENSIONE	IGNITION TRANSFORMER
TAB	TERMOSTATO/PRESSOSTATO ALTA-BASSA FIAMMA	HIGH-LOW THERMOSTAT/PRESSURE SWITCHES
TS	TERMOSTATO/PRESSOSTATO DI SICUREZZA	SAFETY THERMOSTAT OR PRESSURE SWITCH
VPS50x	CONTROLLO DI TENUTA VALVOLE GAS (OPTIONAL)	GAS LEAKAGE MONITOR DEVICE (OPTIONAL)

SIGLA/ITEM	FUNZIONE	FUNCTION
(×××)	SOLO CON ALIMENTAZIONE ELETTRICA SENZA NEUTRO	WITH ELECTRIC SUPPLY WITHOUT NEUTRAL VERSION ONLY
($)	SE PREVISTO "TAB", TOGLIERE IL PONTE TRA I MORSETTI T6-T8	IF "TAB" USED REMOVE THE BRIDGE BETWEEN TERMINALS T6-T8

Data 17/10/2005		PREC.	FOGLIO
Revisione 03		1	2
Dis. N. 18 – 069		SEGUE	TOTALE
		/	2

VERSIONE MODULANTE "MD"
"MD" MODULATING VERSION

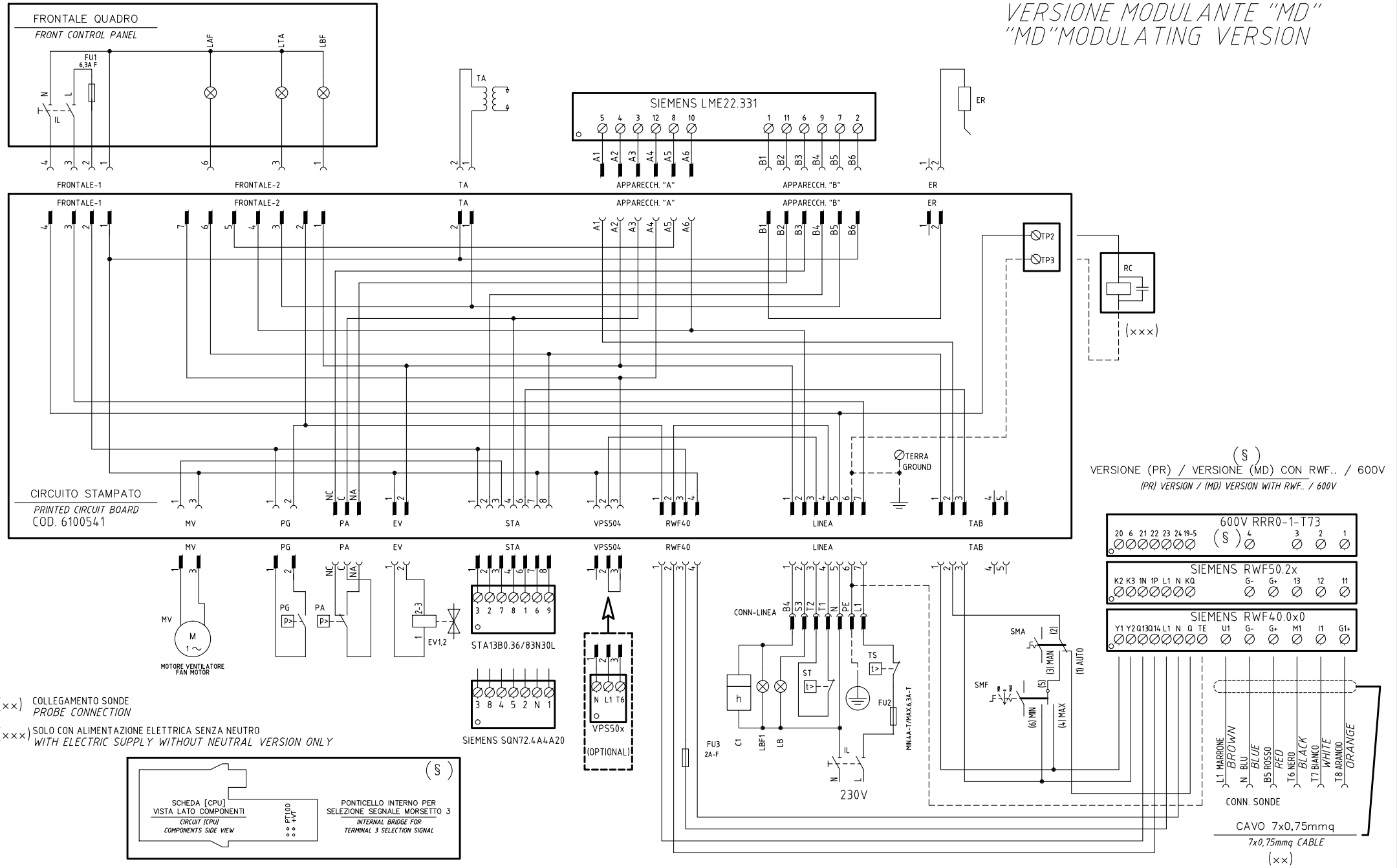

Data 01/10/2008		PREC. /	FOGLIO 1
Revisione 03			
Dis. N. 18 – 166		SEGUE 2	TOTALE 3

(××)

ATTENZIONE COLLEGAMENTO SONDE CON CONNETTORE 7 POLI

WARNING PROBE CONNECTION WITH 7 PINS CONNECTOR

600V RRR0-1-T73 | RWF40.0x0 | RWF50.2x

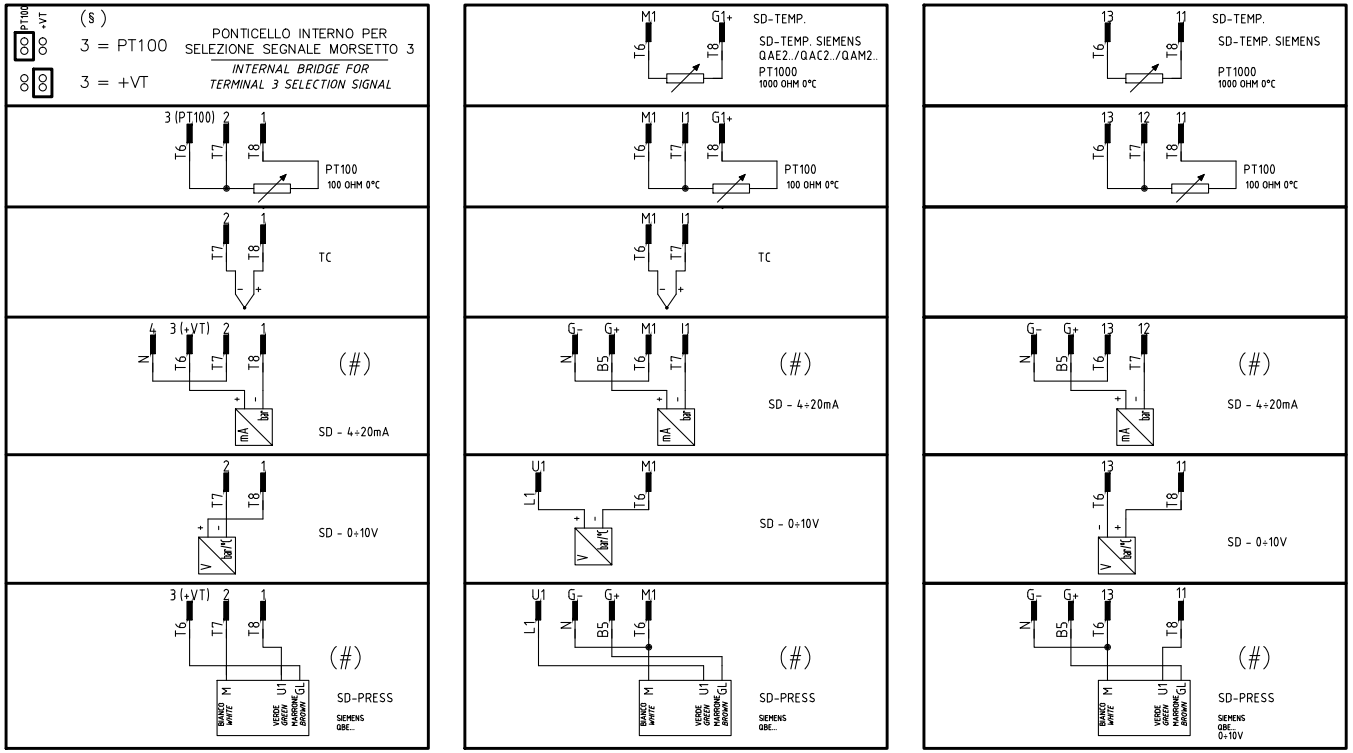

(#) COLLEGAMENTO SOLO PER TRASDUTTORI PASSIVI

TRASDUCER PASSIVE CONNECTION ONLY

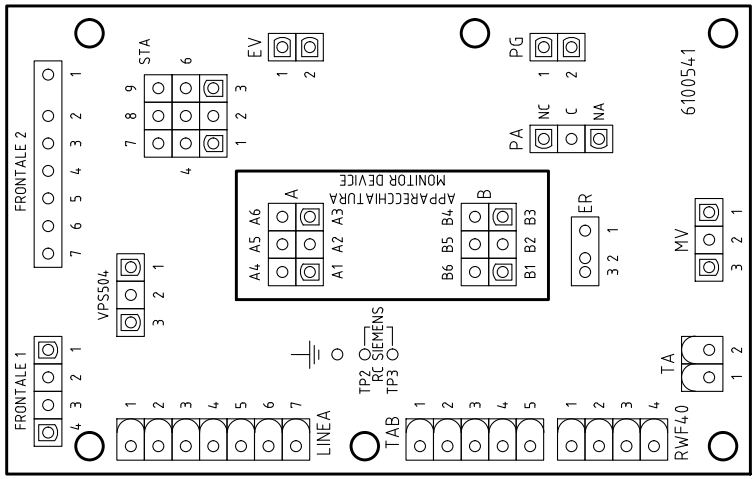

SERVOCOMANDO SERRANDA ARIA

AIR DAMPER ACTUATOR

STA13B0.36/83N30L

I	ALTA FIAMMA *HIGH FLAME*
II	SOSTA *STAND-BY*
IV	BASSA FIAMMA *LOW FLAME*
III	NON USATA *NOT USED*

SERVOCOMANDO SERRANDA ARIA

AIR DAMPER ACTUATOR

SIEMENS SQN72.4A4A20

I (ROSSO) *I (RED)*	ALTA FIAMMA *HIGH FLAME*
II (BLU) *II (BLUE)*	SOSTA *STAND-BY*
III (ARANCIO) *III (ORANGE)*	BASSA FIAMMA *LOW FLAME*
IV (NERO) *IV (BLACK)*	NON USATA *NOT USED*

Data	01/10/2008	PREC.	FOGLIO
Revisione	03	1	2
Dis. N.	18 – 166	SEGUE	TOTALE
		3	3

SIGLA/ITEM	FUNZIONE	FUNCTION
600V RRR0-1-T73	REGOLATORE MODULANTE (ALTERNATIVO)	BURNER MODULATOR (ALTERNATIVE)
C1	CONTAORE BASSA FIAMMA	LOW FLAME TIME COUNTER
ER	ELETTRODO RILEVAZIONE FIAMMA	FLAME DETECTION ELECTRODE
EV1,2	ELETTROVALVOLE GAS (O GRUPPO VALVOLE)	GAS ELECTRO-VALVES (OR VALVES GROUP)
FU1	FUSIBILE DI LINEA	LINE FUSE
FU2	FUSIBILE DI LINEA	LINE FUSE
FU3	FUSIBILE AUSILIARIO	AUXILIARY FUSE
IL	INTERRUTTORE LINEA BRUCIATORE	BURNER LINE SWITCH
IL	INTERRUTTORE LINEA AUSILIARI	AUXILIARY LINE SWITCH
LAF	LAMPADA SEGNALAZIONE ALTA FIAMMA BRUCIATORE	BURNER IN HIGH FLAME INDICATOR LIGHT
LB	LAMPADA SEGNALAZIONE BLOCCO BRUCIATORE	INDICATOR LIGHT FOR BURNER LOCK-OUT
LBF	LAMPADA SEGNALAZIONE BASSA FIAMMA BRUCIATORE	BURNER IN LOW FLAME INDICATOR LIGHT
LBF1	LAMPADA SEGNALAZIONE BASSA FIAMMA BRUCIATORE	BURNER IN LOW FLAME INDICATOR LIGHT
LTA	LAMPADA SEGNALAZIONE TRASFORMATORE DI ACCENSIONE	IGNITION TRANSFORMER INDICATOR LIGHT
MV	MOTORE VENTILATORE	FAN MOTOR
PA	PRESSOSTATO ARIA	AIR PRESSURE SWITCH
PG	PRESSOSTATO GAS DI MINIMA PRESSIONE	MINIMUM GAS PRESSURE SWITCH
PT100	SONDA DI TEMPERATURA	TEMPERATURE PROBE
RC	CIRCUITO RC	RC CIRCUIT
RWF40.0x0	REGOLATORE MODULANTE	BURNER MODULATOR
RWF50.2x	REGOLATORE MODULANTE (ALTERNATIVO)	BURNER MODULATOR (ALTERNATIVE)
SD-PRESS	SONDA DI PRESSIONE	PRESSURE PROBE
SD-TEMP.	SONDA DI TEMPERATURA	TEMPERATURE PROBE
SD - 0÷10V	TRASDUTTORE USCITA IN TENSIONE	TRANSDUCER VOLTAGE OUTPUT
SD - 4÷20mA	TRASDUTTORE USCITA IN CORRENTE	TRANSDUCER CURRENT OUTPUT
SIEMENS LME22.331	APPARECCHIATURA CONTROLLO FIAMMA	CONTROL BOX
SIEMENS SQN72.4A4A20	SERVOCOMANDO SERRANDA ARIA (ALTERNATIVO)	AIR DAMPER ACTUATOR (ALTERNATIVE)
SMA	SELETTORE MANUALE/AUTOMATICO	MANUAL/AUTOMATIC SWITCH
SMF	SELETTORE MANUALE FUNZIONAMENTO MIN-0-MAX	MIN-0-MAX MANUAL OPERATION SWITCH
ST	SERIE TERMOSTATI/PRESSOSTATI	SERIES OF THERMOSTATS OR PRESSURE SWITCHES
STA13B0.36/83N30L	SERVOCOMANDO SERRANDA ARIA	AIR DAMPER ACTUATOR
TA	TRASFORMATORE DI ACCENSIONE	IGNITION TRANSFORMER
TC	TERMOCOPPIA	THERMOCOUPLE
TS	TERMOSTATO/PRESSOSTATO DI SICUREZZA	SAFETY THERMOSTAT OR PRESSURE SWITCH
VPS50x	CONTROLLO DI TENUTA VALVOLE GAS (OPTIONAL)	GAS PROVING SYSTEM (OPTIONAL)

VERSIONE ALTA-BASSA FIAMMA / PROGRESSIVO CON RELE' "KAB" DI SEZIONAMENTO
HIGH-LOW / PROGRESSIVE VERSION WITH "KAB" SECTIONING RELAY
ИСПОЛНЕНИЕ ДВУХСТУПЕНЧАТОЕ/ПРОГРЕССИВНОЕ С РАЗДЕЛИТЕЛЬНЫМ РЕЛЕ «KAB»

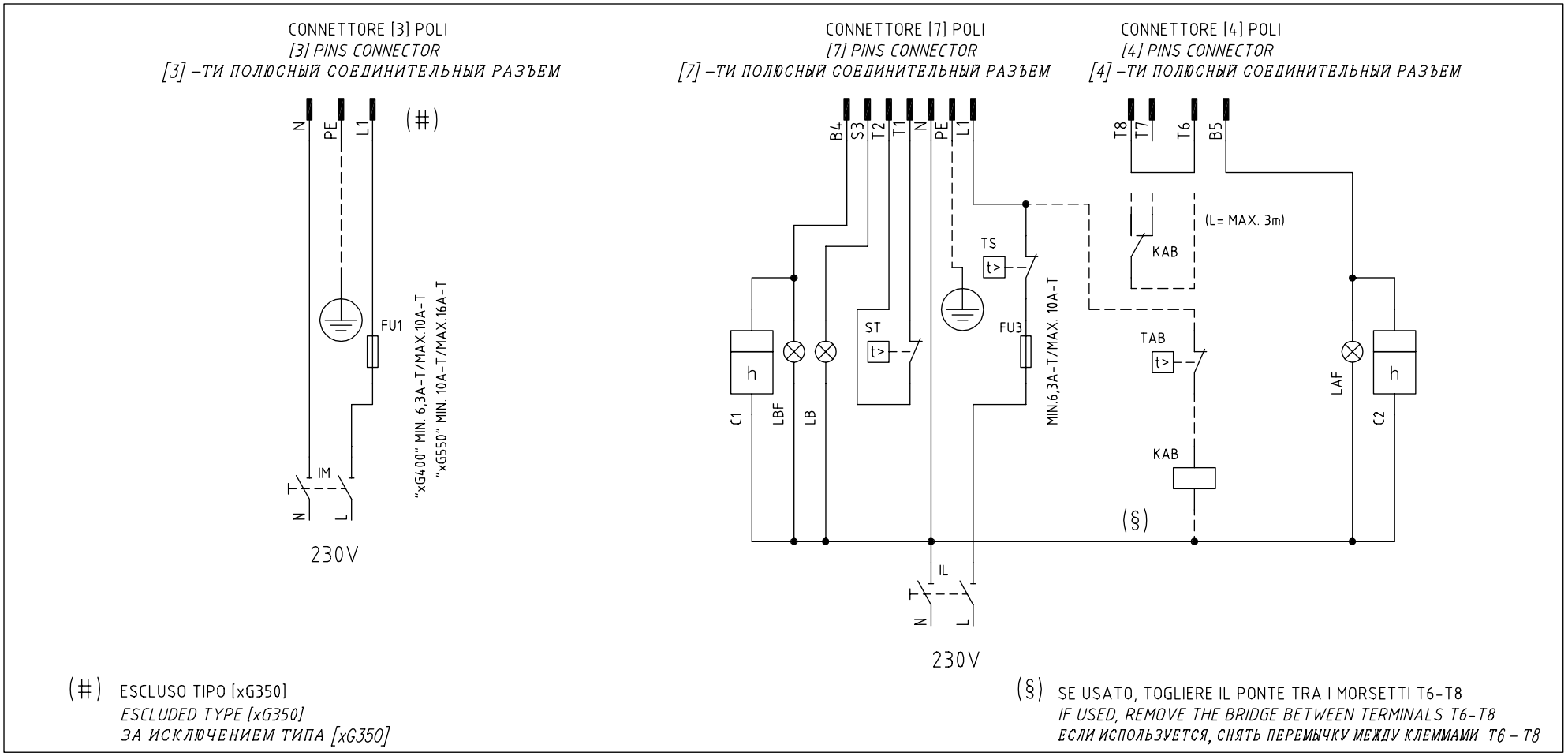

(#) ESCLUSO TIPO [xG350]
ESCLUDED TYPE [xG350]
ЗА ИСКЛЮЧЕНИЕМ ТИПА [xG350]

(§) SE USATO, TOGLIERE IL PONTE TRA I MORSETTI T6-T8
IF USED, REMOVE THE BRIDGE BETWEEN TERMINALS T6-T8
ЕСЛИ ИСПОЛЬЗУЕТСЯ, СНЯТЬ ПЕРЕМЫЧКУ МЕЖДУ КЛЕММАМИ T6 – T8

Data 26/06/2008		PREC. /	FOGLIO 1
Revisione 00			
Dis. N. TAB_1		SEGUE 2	TOTALE 1

0	1	2	3	4	5	6	7	8	9

SIGLA/ITEM	FUNZIONE	FUNCTION
C1	CONTAORE BASSA FIAMMA	LOW FLAME TIME COUNTER
C2	CONTAORE ALTA FIAMMA	HIGH FLAME TIME COUNTER
FU1	FUSIBILE LINEA MOTORE VENTILATORE	FAN MOTOR LINE FUSE
FU3	FUSIBILE LINEA BRUCIATORE	BURNER LINE FUSE
IL	INTERRUTTORE LINEA BRUCIATORE	BURNER LINE SWITCH
IM	INTERRUTTORE LINEA MOTORE VENTILATORE	FAN MOTOR LINE SWITCH
KAB	RELE' AUSILARIO	AUXILIARY RELAY
LAF	LAMPADA SEGNALAZIONE ALTA FIAMMA BRUCIATORE	BURNER IN HIGH FLAME INDICATOR LIGHT
LB	LAMPADA SEGNALAZIONE BLOCCO BRUCIATORE	INDICATOR LIGHT FOR BURNER LOCK-OUT
LBF	LAMPADA SEGNALAZIONE BASSA FIAMMA BRUCIATORE	BURNER IN LOW FLAME INDICATOR LIGHT
ST	SERIE TERMOSTATI/PRESSOSTATI	SERIES OF THERMOSTATS OR PRESSURE SWITCHES
TAB	TERMOSTATO/PRESSOSTATO ALTA-BASSA FIAMMA	HIGH-LOW THERMOSTAT/PRESSURE SWITCHES
TS	TERMOSTATO/PRESSOSTATO DI SICUREZZA	SAFETY THERMOSTAT OR PRESSURE SWITCH

SIGLA/ITEM	FUNZIONE	FUNCTION
C1	CONTAORE BASSA FIAMMA	СЧЕТЧИК ЧАСОВ РАБОТЫ НА МАЛОМ ПЛАМЕНИ
C2	CONTAORE ALTA FIAMMA	СЧЕТЧИК ЧАСОВ РАБОТЫ НА БОЛЬШОМ ПЛАМЕНИ
FU1	FUSIBILE LINEA MOTORE VENTILATORE	ПЛАВКИЙ ПРЕДОХРАНИТЕЛЬ ЛИНИИ ДВИГАТЕЛЯ ВЕНТИЛЯТОРА
FU3	FUSIBILE LINEA BRUCIATORE	ПЛАВКИЙ ПРЕДОХРАНИТЕЛЬ ЛИНИИ ГОРЕЛКИ
IL	INTERRUTTORE LINEA BRUCIATORE	ВЫКЛЮЧАТЕЛЬ ЛИНИИ ГОРЕЛКИ
IM	INTERRUTTORE LINEA MOTORE VENTILATORE	ВЫКЛЮЧАТЕЛЬ ЛИНИИ ДВИГАТЕЛЯ ВЕНТИЛЯТОРА
KAB	RELE' AUSILIARIO	ВСПОМОГАТЕЛЬНОЕ РЕЛЕ
LAF	LAMPADA SEGNALAZIONE ALTA FIAMMA BRUCIATORE	СИГНАЛЬНАЯ ЛАМПОЧКА БОЛЬШОГО ПЛАМЕНИ ГОРЕЛКИ
LB	LAMPADA SEGNALAZIONE BLOCCO BRUCIATORE	СИГНАЛЬНАЯ ЛАМПОЧКА БЛОКИРОВКИ ГОРЕЛКИ
LBF	LAMPADA SEGNALAZIONE BASSA FIAMMA BRUCIATORE	СИГНАЛЬНАЯ ЛАМПОЧКА МАЛОГО ПЛАМЕНИ ГОРЕЛКИ
ST	SERIE TERMOSTATI/PRESSOSTATI	РЯД ТЕРМОСТАТОВ/РЕЛЕ ДАВЛЕНИЯ
TAB	TERMOSTATO/PRESSOSTATO ALTA–BASSA FIAMMA	ТЕРМОСТАТ/РЕЛЕ ДАВЛЕНИЯ БОЛЬШОГО/МАЛОГО ПЛАМЕНИ
TS	TERMOSTATO/PRESSOSTATO DI SICUREZZA	ПРЕДОХРАНИТЕЛЬНЫЙ ТЕРМОСТАТ/ РЕЛЕ ДАВЛЕНИЯ

Data 26/06/2008		PREC. 1	FOGLIO 2
Revisione 00			
Dis. N. TAB_1		SEGUE /	TOTALE 1

APPENDIX: COMPONENTS CHARACTERISTICS

SIEMENS LME11/21/22 CONTROL BOX

The series of equipment LME.. is used for the starup and supervisione of 1- or 2- stage gas burners. The series LME..is interchangeable with the series LGB.. and LMG.., all diagrams and accessories are interchangeable, the main features are:

- Indications of error codes by a signalling multicolor LED in the lockout reset button;
- Programmer fix times for the digital management of signals.

Comparative table

LGB Series	LMG Series	LME Series
---	LMG 25.33	LME 11.33
LGB 21.33	LMG 21.33	LME 21.33
LGB 22.33	LMG 22.33	LME 22.33

Preconditions for burner startup

- Burner control must be reset
- All contacts in the line are closed, request for heat
- No undervoltage
- Air pressure switch LP must be in its “no-load” position
- Fan motor or AGK25 is closed
- Flame detector is darkened and there is no extraneous light

Undervoltage

Safety shutdown from the operating position takes place should mains voltage drop below about AC 175 V (at UN = AC 230 V)

Restart is initiated when mains voltage exceeds about AC 185 V (at UN = AC 230 V).

Controlled intermittent operation

After no more than 24 hours of continuous operation, the burner control will initiate automatic controlled shutdown followed by a restart.

Reversed polarity protection with ionization

If the connections of live conductor (terminal 12) and neutral conductor (terminal 2) aremixed up, the burner control will initiate lockout at the end of the safety time “TSA”.

Control sequence in the event of fault

If lockout occurs, the outputs for the fuel valves, the burner motor and the ignition equipment will immediately be deactivated (< 1 second).

Operational status indication

In normal operation, the different operating states are showed by means of the multicolor LED, inside the lockout reset button:

LED **red LED** **yellow LED** **green LED**	..... Steady on ❍... Off

During startup, status indication takes place according to the table:

Status	Color code	Color
Waiting time tw, other waiting states	❍.....	Off
Ignition phase, ignition controlled	● ❍ ● ❍ ● ❍ ● ❍ ● ❍ ●	Flashing yellow
Operation, flame ok	□.....	Green
Operation, flame not ok	□ ❍ □ ❍ □ ❍ □ ❍ □ ❍	Flashing green
Extraneous light on burner startup	□ ▲ □ ▲ □ ▲ □ ▲ □ ▲	Green - red
Undervoltage	● ▲ ● ▲ ● ▲ ● ▲ ● ▲	Yellow - red
Fault, alarm	▲.....	Red
Error code output (refer to “Error code table”)	▲❍ ▲❍ ▲❍ ▲❍	Flashing red

START-UP PROGRAM

As far as the startup program, see its time diagram:

A Start command (switching on)

This command is triggered by control thermostat / pressure controller «R». Terminal 12 receives voltage and the programming mechanism starts running. On completion of waiting time «tw» with the LME21..., or after air damper «SA» has reached the nominal load position (on completion of «t11») with the LME22..., fan motor «M» will be started.

tw Waiting time

During the waiting time, air pressure monitor «LP» and flame relay «FR» are tested for correct contact positions.

t11 Programmed opening time for actuator «SA»

(Only with LME22...) The air damper opens until the nominal load position is reached. Only then will fan motor «M» be switched on.

t10 Specified time for air pressure signal

On completion of this period of time, the set air pressure must have built up, or else lockout will occur.

t1 Prepurge time

Purging the combustion chamber and the secondary heating surfaces: required with low-fire air volumes when using the LME21... and with nominal load air volumes when using the LME22.... The diagrams show the so-called prepurge time «t1» during which air pressure monitor «LP» must indicate that the required air pressure is available. The effective prepurge time «t1» comprises interval end «tw» through «t3».

t12 Programmed closing time for actuator «SA»

(Only with LME22...)During «t12», the air damper travels to the low-fire position.

t3 Preignition time

During «t3» and up to the end of «TSA», flame relay «FR» is forced to close. On completion of «t3», the release of fuel is triggered at terminal 4.

TSA Ignition safety time

On completion of «TSA», a flame signal must be present at terminal 1. That flame signal must be continuously available until shutdown occurs, or else flame relay «FR» will be deenergized, resulting in lockout.

t4 Interval BV1 and BV2-LR

Time between the end of TSA and the signal to the second fuel valve BV2 or to the load controller LR

B - B' Interval for flame establishment

C Burner operation position

C - D Burner operation (heat production)

D Controlled by "R" shutdown

The burner stops and the control device is ready for a new startup.

LME11 control sequence

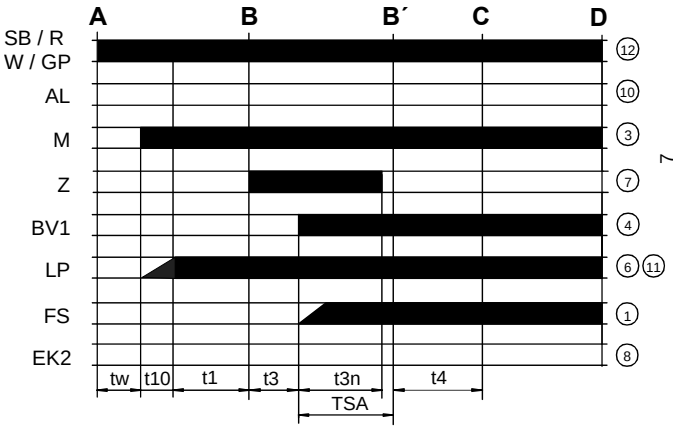

LME22 control sequence

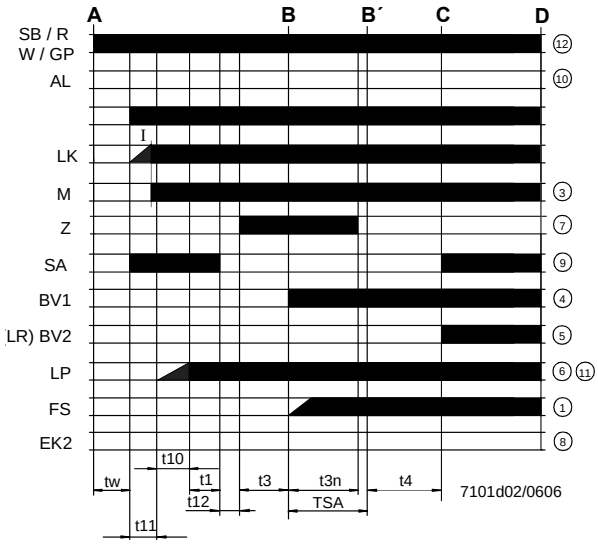

LME21 control sequence

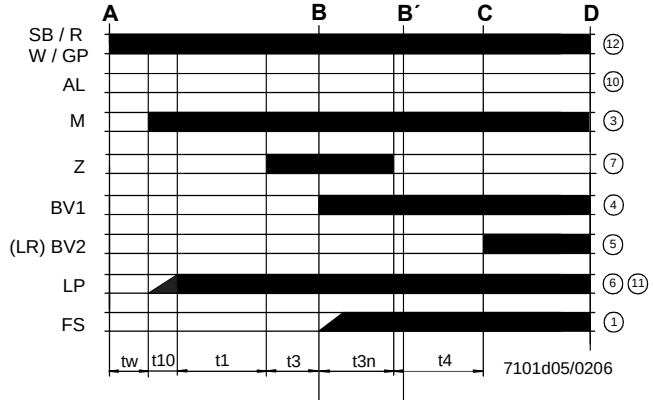

Control sequence

tw	Waiting time
t1	Purge time
TSA	Ignition safety time
t3	Preignition time
t3n	Postignition time
t4	Interval between BV1 and BV2/LR
t10	Specified time for air pressure signal
t11	Programmed opening time for actuator SA
t12	Programmed closing time for actuator SA

LME11 connection diagram

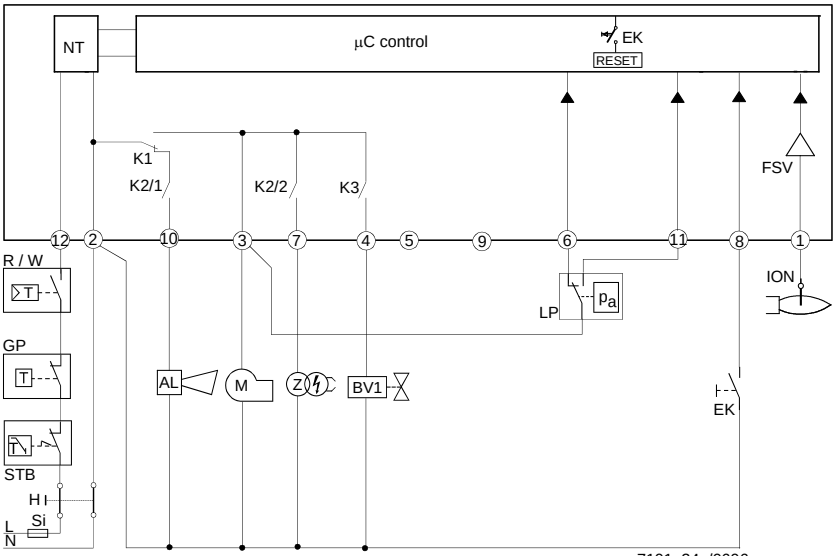

LME21 connection diagram

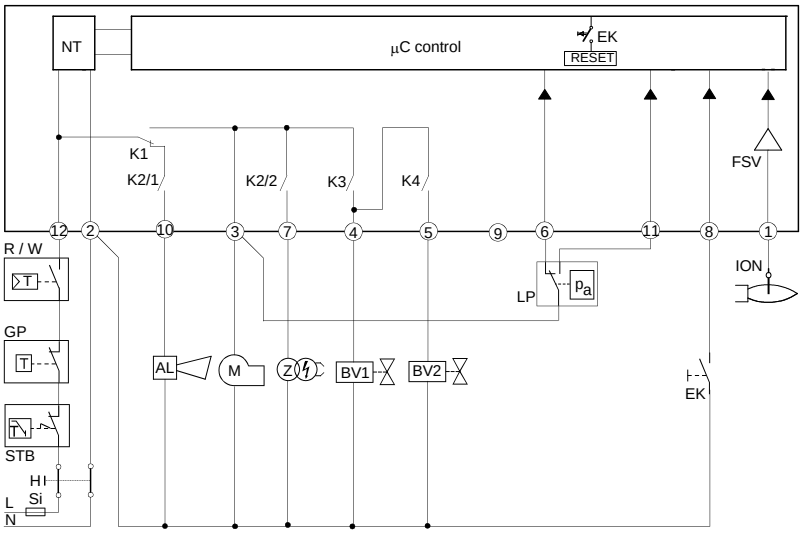

LME22 connection diagram

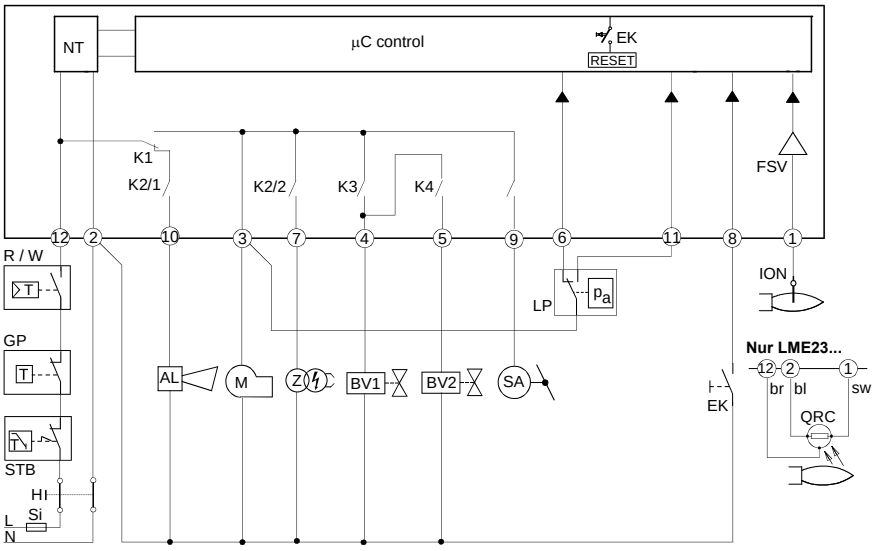

Connection diagram

AL	Error message (alarm)
BV	Fuel valve
EK2	Remote lockout reset button
FS	Flame signal
GP	Gas pressure switch
LP	Air pressure switch
LR	Load controller
M	Fan motor
R	Control thermostat/pressurestat
SB	Safety limit thermostat
W	Limit thermostat /pressure switch
Z	Ignition transformer

CONTROL PROGRAM IN THE EVENT OF FAULT

- If a fault occurs, all outputs will immediately be deactivated (in less than 1s).
- After an interruption of power, a restart will be made with the full program sequence.
- If the operating voltage drops below the undervoltage thresold, a safety shutdown is performed.
- If the operating voltage exceeds the undervoltage thresold, a restart will be performed.
- In case of extraneous light during “t1”, a lockout occurs.
- In case of extraneous light during “tw”, there is a prevention of startup and a lockout after 30 seconds.
- In case of no flame at the end of TSA, there will be max. 3 repetitions of the startup cycle, followed by a lockout at the end of TSA, for mod. LME11..; directly a lockout at the end of TSA for LME21-22 models.
- For LME11 model: if a loss of flame occurs during operation, in case of an establishment of flame at the end of TSA, there will be max. 3 repetitions, otherwise a lockout will occur.
- For LME21-22 models: if a loss of flame occurs during operation, there will be a lockout.
- If the contact of air pressure monitor LP is in working position, a prevention of startup and lockout after 65 seconds will occur.
- IIf the contact of air pressure monitor LP is in normal position, a lockout occurs at the end of t10.
- If no air pressure signal is present after completion of t1, a lockout will occur.

In the event of lockout, the LME.. remains locked and the red signal lamp (LED) will light up.The burner control can immediately be reset. This state is also mantained in the case fo mains failure.

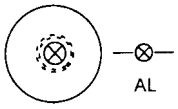

DIAGNOSITICS OF THE CASUE OF FAULT

- Press the lockout reset button for more than 3 seconds to activate the visual diagnostics.
- Count the number of blinks of the red signsl lamp and check the fault condition on the “Error code table” (the device repeats the blinks for regular intervals).

During diagnostics, the control outputs are deactivated:

- the burner remains shut down;
- external fault indication is deactivated;
- fault status is showed by the red LED, inside the LME’s lockout reset buttonaccording to the “Error code table”:

CONTROL BOX LOCKED

ERROR CODE TABLE	
2 blinks **	**No establishment of flame at the end of TSA** - Faulty or soiled fuel valves - Faulty or soiled flame detector - Inadequate adjustement of burner, no fuel - Faulty ignition equipment
3 blinks ***	**The air pressure switch does not switch or remains in idle position:** - LP is faulty - Loss of air pressure signal after t10 - LPis welded in normal position.
4 blinks ****	- Extraneous light when burner starts up.
5 blinks *****	- LP is working position.
6 blinks *****	Free.
7 blinks *******	**Loss of flame during operation** - Faulty or soiled fuel valves - Faulty or soiled flame detector - Inadequate adjustement of burner
8 ÷ 9 blinks	Free
10 blinks **********	**Faulty output contacts** - Wiring error - Anomalous voltage on ouput terminals - Other faults
14 blinks **************	- CPI contact not closed.

RESETTING THE BURNER CONTROL

When lockout occurs, the burner control can immediately be reset, by pressing the lockout reset button for about 1..3 seconds. The LME.. can only be reset when all contacts in the line are closed and when there is no undervoltage.

LIMITATION OF REPETITIONS (only for LME11.. model)

If no flame is established at the end of TSA, or if the flame is lost during operation, a maximum of 3 repetitions per controller startup can be performed via “R”, otherwise lockout will be initiated. Counting of repetitions is restarted each time a controlled startup via “R” takes place.

TECHNICAL CHARACTERISTICS

Mains voltage	120V AC +10% / -15% 230V AC +10% / -15%
Frequency	50 ... 60 Hz +/- 6%
Power consumption	12VA
External primary fuse	max. 10 A (slow)
input current at terminal 12	max. 5 A
Thermostats cable length	max. 3 m
Index of protection	IP40 (to be ensured during mounting)
Operating conditions	-20... +60 °C, < 95% UR
Storage conditions	-20... +60 °C, < 95% UR
Weight	approx. 160 g

C.I.B.UNIGAS S.p.A.
Via L.Galvani ,9 - 35011Campodarsego (PD) - ITALY
Tel. +39 049 9200944 - Fax +39 049 9200945
website: www.cibunigas.it - *e-mail:* cibunigas@cibunigas.com

Note: specifications and data subject to change. Errors and omissions exceptd.

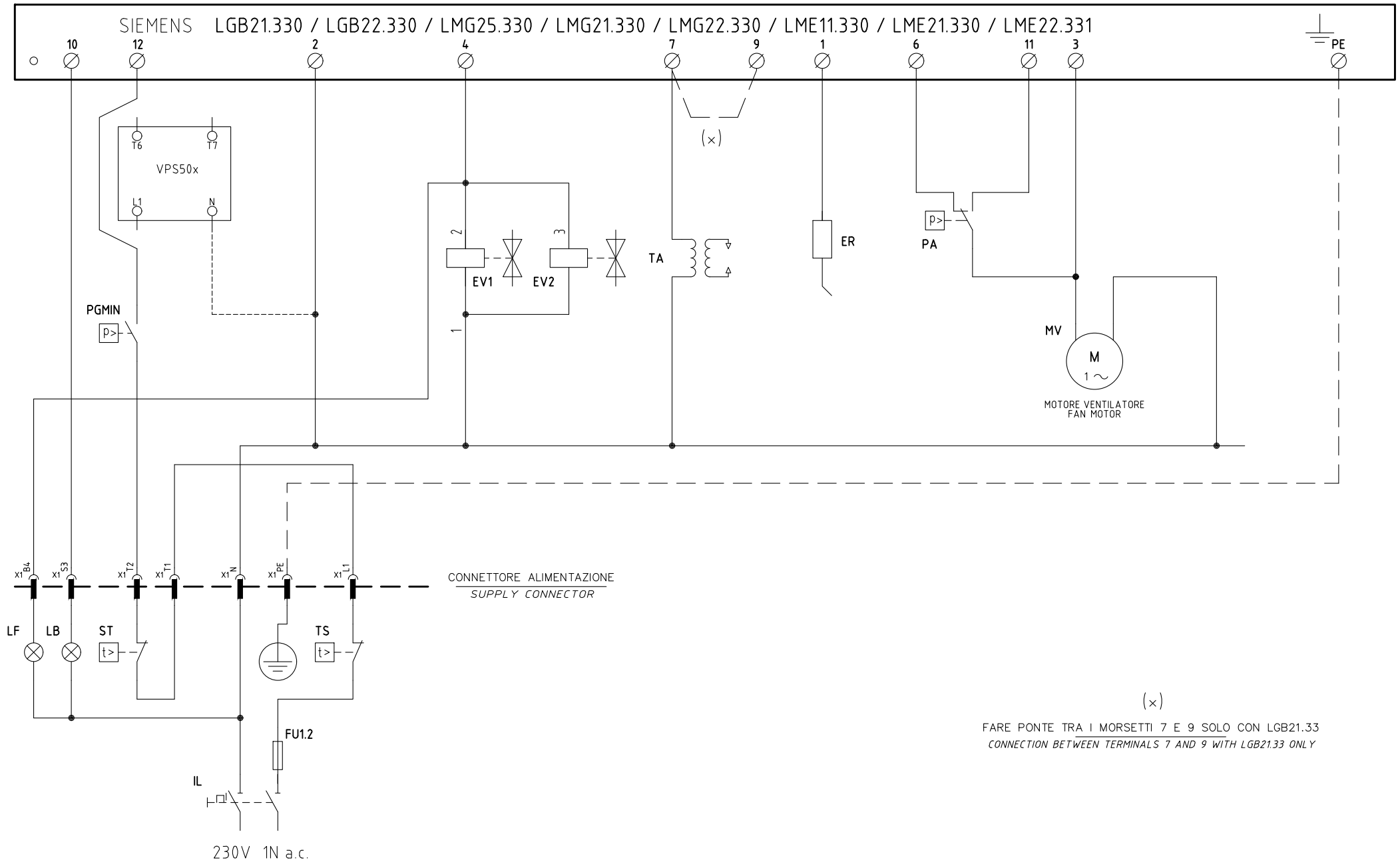

(x)

FARE PONTE TRA I MORSETTI 7 E 9 SOLO CON LGB21.33

CONNECTION BETWEEN TERMINALS 7 AND 9 WITH LGB21.33 ONLY

REV.	MODIFICA	DATA	FIRME
05	SIEMENS LME... & TYPE ADDED	10/07/20	U. PINTON
04	TYPES NG-NGX-LG70/90/140/200 ADDED	01/09/05	U. PINTON
03	SIEMENS LMG... ADDED	07/09/99	U. PINTON
02	"MA" TERMINAL BLOCK MODIFIED	18/03/97	U. PINTON
01	BRIDGE FOR LGB21.33 ADDED	07/11/96	U. PINTON

UNIGAS

Impianto

TIPI/TYPES NG(X)–LG(X) 35/70/90/120/140/200
MODELLO/MODEL x–.TN.x.xx.A.x.xx

Descrizione

Ordine		Data	06/02/1996
Commessa	Data Controllato 10/07/2020	Revisione	05
Esecutore U. PINTON	Controllato M. MASCHIO	Dis. N.	01 – 0319

PREC.	FOGLIO
/	1
SEGUE	TOTALE
2	2

0	1	2	3	4	5	6	7	8	9

SIGLA/ITEM	FOGLIO/SHEET	FUNZIONE/FUNCTION [1]	FUNZIONE/FUNCTION [2]
ER	1	ELETTRODO RILEVAZIONE FIAMMA	FLAME DETECTION ELECTRODE
EV1	1	ELETTROVALVOLA GAS LATO RETE (O GRUPPO VALVOLE)	UPSTREAM GAS SOLENOID VALVE (OR VALVES GROUP)
EV2	1	ELETTROVALVOLA GAS LATO BRUCIATORE (O GRUPPO VALVOLE)	DOWNSTREAM GAS SOLENOID VALVE (OR VALVES GROUP)
FU1.2	1	FUSIBILE DI LINEA	LINE FUSE
IL	1	INTERRUTTORE GENERALE	MAINS SWITCH
LB	1	LAMPADA SEGNALAZIONE BLOCCO BRUCIATORE	INDICATOR LIGHT FOR BURNER LOCK-OUT
LF	1	LAMPADA SEGNALAZIONE FUNZIONAMENTO BRUCIATORE	INDICATOR LIGHT BURNER OPERATION
LGB.. / LMG.. / LME..	1	APPARECCHIATURA CONTROLLO FIAMMA	CONTROL BOX
MV	1	MOTORE VENTILATORE	FAN MOTOR
PA	1	PRESSOSTATO ARIA	AIR PRESSURE SWITCH
PGMIN	1	PRESSOSTATO GAS DI MINIMA PRESSIONE	MINIMUM GAS PRESSURE SWITCH
ST	1	SERIE TERMOSTATI/PRESSOSTATI	SERIES OF THERMOSTATS OR PRESSURE SWITCHES
TA	1	TRASFORMATORE DI ACCENSIONE	IGNITION TRANSFORMER
TS	1	TERMOSTATO/PRESSOSTATO DI SICUREZZA	SAFETY THERMOSTAT OR PRESSURE SWITCH
VPS50x	1	CONTROLLO DI TENUTA VALVOLE GAS (OPTIONAL)	GAS PROVING SYSTEM (OPTIONAL)