RG1025
RG1030
RG1040

LMV2x
Microprocessor-controlled
Light oil burners

MANUAL OF INSTALLATION - USE - MAINTENANCE

CIB UNIGAS

BURNERS - BRUCIATORI - BRULERS - BRENNER - QUEMADORES - ГОРЕЛКИ

M039360CA Rel. 0.4 05/2020

DANGERS, WARNINGS AND NOTES OF CAUTION

THIS MANUAL IS SUPPLIED AS AN INTEGRAL AND ESSENTIAL PART OF THE PRODUCT AND MUST BE DELIVERED TO THE USER.

INFORMATION INCLUDED IN THIS SECTION ARE DEDICATED BOTH TO THE USER AND TO PERSONNEL FOLLOWING PRODUCT INSTALLATION AND MAINTENANCE.

THE USER WILL FIND FURTHER INFORMATION ABOUT OPERATING AND USE RESTRICTIONS, IN THE SECOND SECTION OF THIS MANUAL. WE HIGHLY RECOMMEND TO READ IT.

CAREFULLY KEEP THIS MANUAL FOR FUTURE REFERENCE.

1) GENERAL INTRODUCTION

- The equipment must be installed in compliance with the regulations in force, following the manufacturer's instructions, by qualified personnel.
- Qualified personnel means those having technical knowledge in the field of components for civil or industrial heating systems, sanitary hot water generation and particularly service centres authorised by the manufacturer.
- Improper installation may cause injury to people and animals, or damage to property, for which the manufacturer cannot be held liable.
- Remove all packaging material and inspect the equipment for integrity.

In case of any doubt, do not use the unit - contact the supplier.

The packaging materials (wooden crate, nails, fastening devices, plastic bags, foamed polystyrene, etc), should not be left within the reach of children, as they may prove harmful.

- Before any cleaning or servicing operation, disconnect the unit from the mains by turning the master switch OFF, and/or through the cut-out devices that are provided.
- Make sure that inlet or exhaust grilles are unobstructed.
- In case of breakdown and/or defective unit operation, disconnect the unit. Make no attempt to repair the unit or take any direct action.

Contact qualified personnel only.

Units shall be repaired exclusively by a servicing centre, duly authorised by the manufacturer, with original spare parts and accessories.

Failure to comply with the above instructions is likely to impair the unit's safety.

To ensure equipment efficiency and proper operation, it is essential that maintenance operations are performed by qualified personnel at regular intervals, following the manufacturer's instructions.

- When a decision is made to discontinue the use of the equipment, those parts likely to constitute sources of danger shall be made harmless.
- In case the equipment is to be sold or transferred to another user, or in case the original user should move and leave the unit behind, make sure that these instructions accompany the equipment at all times so that they can be consulted by the new owner and/or the installer.
- This unit shall be employed exclusively for the use for which it is meant. Any other use shall be considered as improper and, therefore, dangerous.

The manufacturer shall not be held liable, by agreement or otherwise, for damages resulting from improper installation, use and failure to comply with the instructions supplied by the manufacturer.The occurrence of any of the following circustances may cause explosions, polluting unburnt gases (example: carbon monoxide CO), burns, serious harm to people, animals and things:

- Failure to comply with one of the WARNINGS in this chapter
- Incorrect handling, installation, adjustment or maintenance of the burner
- Incorrect use of the burner or incorrect use of its parts or optional supply

2) SPECIAL INSTRUCTIONS FOR BURNERS

- The burner should be installed in a suitable room, with ventilation openings complying with the requirements of the regulations in force, and sufficient for good combustion.
- Only burners designed according to the regulations in force should be used.
- This burner should be employed exclusively for the use for which it was designed.
- Before connecting the burner, make sure that the unit rating is the same as delivery mains (electricity, gas oil, or other fuel).
- Observe caution with hot burner components. These are, usually, near to the flame and the fuel pre-heating system, they become hot during the unit operation and will remain hot for some time after the burner has stopped.

When the decision is made to discontinue the use of the burner, the user shall have qualified personnel carry out the following operations:

a Remove the power supply by disconnecting the power cord from the mains.

b Disconnect the fuel supply by means of the hand-operated shut-off valve and remove the control handwheels from their spindles.

Special warnings

- Make sure that the burner has, on installation, been firmly secured to the appliance, so that the flame is generated inside the appliance fire-box.
- Before the burner is started and, thereafter, at least once a year, have qualified personnel perform the following operations:

a set the burner fuel flow rate depending on the heat input of the appliance;

b set the flow rate of the combustion-supporting air to obtain a combustion efficiency level at least equal to the lower level required by the regulations in force;

c check the unit operation for proper combustion, to avoid any harmful or polluting unburnt gases in excess of the limits permitted by the regulations in force;

d make sure that control and safety devices are operating properly;

e make sure that exhaust ducts intended to discharge the products of combustion are operating properly;

f on completion of setting and adjustment operations, make sure that all mechanical locking devices of controls have been duly tightened;

g make sure that a copy of the burner use and maintenance instructions is available in the boiler room.

- In case of a burner shut-down, reser the control box by means of the RESET pushbutton. If a second shut-down takes place, call the Technical Service, **without trying to RESET further**.
- The unit shall be operated and serviced by qualified personnel only, in compliance with the regulations in force.

3) GENERAL INSTRUCTIONS DEPENDING ON FUEL USED

3a) ELECTRICAL CONNECTION

- For safety reasons the unit must be efficiently earthed and installed as required by current safety regulations.
- It is vital that all saftey requirements are met. In case of any doubt, ask for an accurate inspection of electrics by qualified personnel, since the manufacturer cannot be held liable for damages that may be caused by failure to correctly earth the equipment.
- Qualified personnel must inspect the system to make sure that it is adequate to take the maximum power used by the equipment shown on the equipment rating plate. In particular, make sure that the system cable cross section is adequate for the power absorbed by the unit.
- No adaptors, multiple outlet sockets and/or extension cables are permitted to connect the unit to the electric mains.
- An omnipolar switch shall be provided for connection to mains, as required by the current safety regulations.
- The use of any power-operated component implies observance of a few basic rules, for example:
  - do not touch the unit with wet or damp parts of the body and/or with bare feet;
  - do not pull electric cables;
  - do not leave the equipment exposed to weather (rain, sun, etc.) unless expressly required to do so;
  - do not allow children or inexperienced persons to use equipment;
- The unit input cable shall not be replaced by the user.
  In case of damage to the cable, switch off the unit and contact qualified personnel to replace.
  When the unit is out of use for some time the electric switch supplying all the power-driven components in the system (i.e. pumps, burner, etc.) should be switched off.

3b) FIRING WITH GAS, LIGHT OIL OR OTHER FUELS

GENERAL

- The burner shall be installed by qualified personnel and in compliance with regulations and provisions in force; wrong installation can cause injuries to people and animals, or damage to property, for which the manufacturer cannot be held liable.
- Before installation, it is recommended that all the fuel supply system pipes be carefully cleaned inside, to remove foreign matter that might impair the burner operation.
- Before the burner is commissioned, qualified personnel should inspect the following:

a the fuel supply system, for proper sealing;
b the fuel flow rate, to make sure that it has been set based on the firing rate required of the burner;
c the burner firing system, to make sure that it is supplied for the designed fuel type;
d the fuel supply pressure, to make sure that it is included in the range shown on the rating plate;
e the fuel supply system, to make sure that the system dimensions are adequate to the burner firing rate, and that the system is equipped with all the safety and control devices required by the regulations in force.

- When the burner is to remain idle for some time, the fuel supply tap or taps should be closed.

SPECIAL INSTRUCTIONS FOR USING GAS

Have qualified personnel inspect the installation to ensure that:

a the gas delivery line and train are in compliance with the regulations and provisions in force;
b all gas connections are tight;
c the boiler room ventilation openings are such that they ensure the air supply flow required by the current regulations, and in any case are sufficient for proper combustion.

- Do not use gas pipes to earth electrical equipment.
- Never leave the burner connected when not in use. Always shut the gas valve off.
- In case of prolonged absence of the user, the main gas delivery valve to the burner should be shut off.

Precautions if you can smell gas

a do not operate electric switches, the telephone, or any other item likely to generate sparks;
b immediately open doors and windows to create an air flow to purge the room;
c close the gas valves;
d contact qualified personnel.

- Do not obstruct the ventilation openings of the room where gas appliances are installed, to avoid dangerous conditions such as the development of toxic or explosive mixtures.

DIRECTIVES AND STANDARDS

Gas burners

European directives

-Regulation 2016/426/UE (appliances burning gaseous fuels)
-2014/35/UE (Low Tension Directive)
-2014/30/UE (Electromagnetic compatibility Directive)
-2006/42/EC (Machinery Directive)

Harmonized standards

-UNI EN 676 (Automatic forced draught burners for gaseous fuels)
-EN 55014-1 (Electromagnetic compatibility- Requirements for house hold appliances, electric tools and similar apparatus)
-EN 60204-1:2006 (Safety of machinery – Electrical equipment of machines.)
-CEI EN 60335-1 (Specification for safety of household and similar electrical appliances);
-CEI EN 60335-2-102 (Household and similar electrical appliances. Safety. Particular requirements for gas, oil and solid-fuel burning appliances having electrical connections).
-UNI EN ISO 12100:2010 (Safety of machinery - General principles for design - Risk assessment and risk reduction);

Light oil burners

European directives

-2014/35/UE (Low Tension Directive)
-2014/30/UE (Electromagnetic compatibility Directive)
-2006/42/EC (Machinery Directive)

Harmonized standards

-UNI EN 267-2011(Automatic forced draught burners for liquid fuels)
-EN 55014-1 (Electromagnetic compatibility- Requirements for house hold appliances, electric tools and similar apparatus)
-EN 60204-1:2006 (Safety of machinery – Electrical equipment of machines.)
-CEI EN 60335-1 (Specification for safety of household and similar electrical appliances);
-CEI EN 60335-2-102 (Household and similar electrical appliances. Safety. Particular requirements for gas, oil and solid-fuel burning appliances having electrical connections).
-UNI EN ISO 12100:2010 (Safety of machinery - General principles for design - Risk assessment and risk reduction);

National Standard

-UNI 7824 (Atomizing burners of the monobloc type. Characteristics and test methods)

Heavy oil burners

European Directives

-2014/35/UE (Low Tension Directive)
-2014/30/UE (Electromagnetic compatibility Directive)
-2006/42/EC (Machinery Directive)

Harmonized standards

-UNI EN 267(Automatic forced draught burners for liquid fuels)
-EN 55014-1 (Electromagnetic compatibility- Requirements for house hold appliances, electric tools and similar apparatus)
-EN 60204-1:2006 (Safety of machinery – Electrical equipment of machines.)
-CEI EN 60335-1 (Specification for safety of household and similar electrical appliances);
-CEI EN 60335-2-102 (Household and similar electrical appliances. Safety. Particular requirements for gas, oil and solid-fuel burning appliances having electrical connections).
-UNI EN ISO 12100:2010 (Safety of machinery - General principles for design - Risk assessment and risk reduction);

Norme nazionali / National Standard

-UNI 7824 (Atomizing burners of the monobloc type. Characteristics and test methods.

Gas - Light oil burners

European Directives

-Regulation 2016/426/UE (appliances burning gaseous fuels)
-2014/35/UE (Low Tension Directive)
-2014/30/UE (Electromagnetic compatibility Directive)
-2006/42/EC (Machinery Directive)

Harmonized standards

-UNI EN 676 (Automatic forced draught burners for gaseous fuels)
-UNI EN 267(Automatic forced draught burners for liquid fuels)
-EN 55014-1 (Electromagnetic compatibility- Requirements for house hold appliances, electric tools and similar apparatus)
-EN 60204-1:2006 (Safety of machinery – Electrical equipment of machines.)
-CEI EN 60335-1 (Specification for safety of household and similar electrical appliances);
-CEI EN 60335-2-102 (Household and similar electrical appliances. Safety. Particular requirements for gas, oil and solid-fuel burning appliances having electrical connections).
-UNI EN ISO 12100:2010 (Safety of machinery - General principles for design - Risk assessment and risk reduction);

Norme nazionali / National Standard

-UNI 7824 (Atomizing burners of the monobloc type. Characteristics and test methods.

Gas - Heavy oil burners

European directives:

-Regulation 2016/426/UE (appliances burning gaseous fuels)
-2014/35/UE (Low Tension Directive)
-2014/30/UE (Electromagnetic compatibility Directive)
-2006/42/EC (Machinery Directive)

Harmonized standards

-UNI EN 676 (Automatic forced draught burners for gaseous fuels)
-EN 55014-1 (Electromagnetic compatibility- Requirements for house hold appliances, electric tools and similar apparatus)
-EN 60204-1:2006 (Safety of machinery – Electrical equipment of machines.)
-CEI EN 60335-1 (Specification for safety of household and similar electrical appliances);
-CEI EN 60335-2-102 (Household and similar electrical appliances. Safety. Particular requirements for gas, oil and solid-fuel burning appliances having electrical connections).
-UNI EN ISO 12100:2010 (Safety of machinery - General principles for design - Risk assessment and risk reduction);

National Standard

- UNI 7824 (Atomizing burners of the monobloc type. Characteristics and test methods.

Industrial burners

European directives

-Regulation 2016/426/UE (appliances burning gaseous fuels)
-2014/35/UE (Low Tension Directive)
-2014/30/UE (Electromagnetic compatibility Directive)
-2006/42/EC (Machinery Directive)

Harmonized standards

-EN 55014-1 (Electromagnetic compatibility- Requirements for house hold appliances, electric tools and similar apparatus)
-EN 746-2 (Industrial thermoprocessing equipment - Part 2: Safety requirements for combustion and fuel handling systems)
-UNI EN ISO 12100:2010 (Safety of machinery - General principles for design - Risk assessment and risk reduction);
-EN 60204-1:2006 (Safety of machinery – Electrical equipment of machines.)
-EN 60335-2 (Electrical equipment of non-electric appliances for household and similar purposes. Safety requirements)

Burner data plate

For the following information, please refer to the data plate:

- burner type and burner model: must be reported in any communication with the supplier
- burner ID (serial number): must be reported in any communication with the supplier
- date of production (year and month)
- information about fuel type and network pressure

Type	--
Model	--
Year	--
S.Number	--
Output	--
Oil Flow	--
Fuel	--
Category	--
Gas Pressure	--
Viscosity	--
El.Supply	--
El.Consump.	--
Fan Motor	--
Protection	--
Drwaing n°	--
P.I.N.	--

SYMBOLS USED

WARNING! Failure to observe the warning may result in irreparable damage to the unit or damage to the environment

DANGER! Failure to observe the warning may result in serious injuries or death.

WARNING! Failure to observe the warning may result in electric shock with lethal consequences

Figures, illustrations and images used in this manual may differ in appearance from the actual product.

PART I: INSTALLATION

GENERAL FEATURES

This series represents monobloc burners made in die-cast aluminium housing with relative flange to work on heating generators. The output range is from 2550kW to 13000kW (according to models). They can be provided in progressive or fully-modulating version.

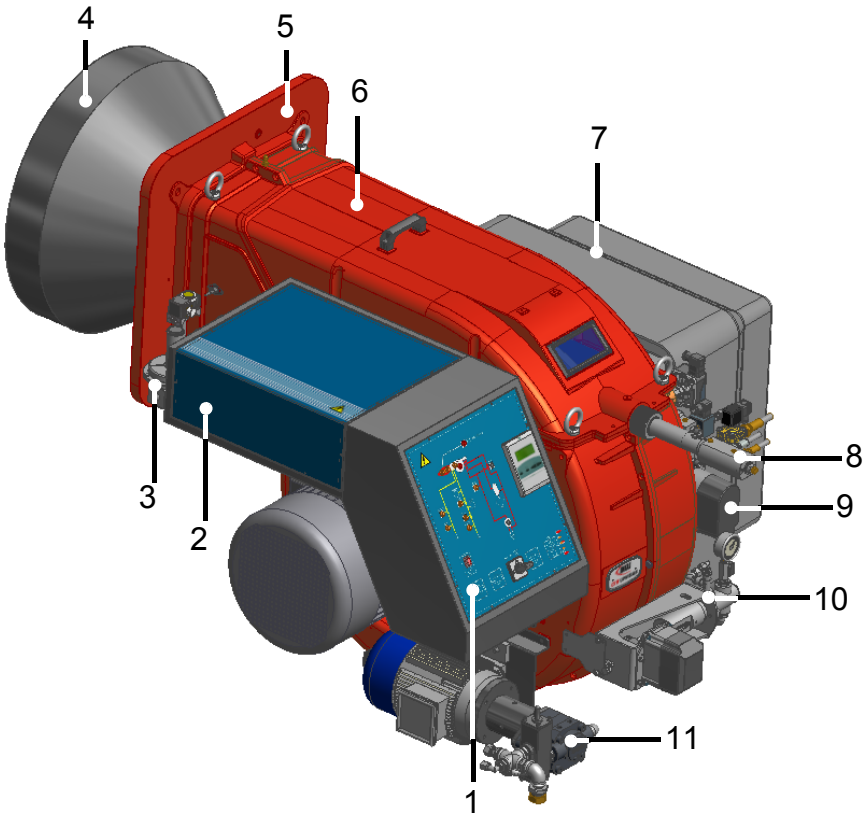

Fig. 1

Note: the figure is indicative only.

1 Control panel
2 Electrical panel
3 Pilot gas train
4 Blast tube-combustion head
5 Burner flange
6 Burner cover
7 Air inlet
8 Gun and head adjusting ring nut
9 Actuator
10 Oil pressure governor
11 Pump

Light oil operation:the fuel coming from the supply line, is pushed by the pump to the nozzle and then into the combustion chamber, where the mixture between fuel and air takes place and consequently the flame.
In the burners, the mixture bertween fuel and air, to perform clean and efficient combustion, is activated by atomisation of oil into very small particles. This process is achieved making pressurised oil passing through the nozzle.
The pump main function is to transfer oil from the tank to the nozzle in the desired quantity and pressure. To adjust this pressure, pumps are provided with a pressure regulator (except for some models for which a separate regulating valve is provided). Other pumps are provided with two pressure regulators: one for the high and one for low pressure (in double-stage systems with one nozzle).

The adjustable combustion head can improve the burner performance. The combustion head determines the energetic quality and the geometry of the flame. Fuel and comburent are routed into separated ways as far as the zone of flame generation (combustion chamber).
The control panel, placed on the burner front side, shows each operating stage.

Burner model identification

Burners are identified by burner type and model. Burner model identification is described as follows.

Type	**RG1025**	Model	**G-.**	**PR.**	**S.**	**.**	**A.**	**EB.**
	(1)		**(2)**	**(3)**	**(4)**	**(5)**	**(6)**	**(7)**

(1) BURNER TYPE	**RG1025 - RG1030 - RG1040**
(2) FUEL	G - Light oil, A - Biodiesel
(3) OPERATION (Available versions)	PR - Progressive MD - Fully modulating
(4) BLAST TUBE	S - Standard
(5) DESTINATION COUNTRY	* - see data plate
(6) BURNER VERSION	A - Standard Y - Special
(7) MICRO-PROCESSOR CONTROL	EA = micro-processor control, without inverter EB = micro-processor control, with inverter

Specifications

BURNERS		**RG1025**	**RG1030**	**RG1040**
Output	min. - max. kW	2550 - 8700	2550 - 10600	2550 - 13000
Light oil rate	min. - max. kg/h	215 - 733	215 - 893	215 - 1095
Fuel		Light oil		
Viscosity		2 - 7.4 cSt @ 40°C		
Density		840 kg/m^3		
Power supply		400V 3N ~ 50Hz		
Electric motor	kW	18.5	22	30
Pump motor	kW	4	4	5.5
Total power consumption	kW	22	26.5	36
Approx. weight	kg	440	470	500
Protection		IP40		
Operation		Progressive - Fully modulating		
Operating temperature	°C	-10 ÷ +50		
Storage Temperature	°C	-20 ÷ +60		
Working service*		Intermittent		
noise level (sound power level)(**)	dBa, max	86		

NOTE: Choosing the nozzle for light oil, consider Hi equal to 42.7 MJ/kg.

WARNING: Burners are suitable only for indoor operation with a maximum relative humidity of 80%

***NOTE ON THE BURNER WORKING SERVICE: for safety reasons, one controlled shutdown must be performed after 24 hours of countinous operation.**

How to read the burner "Performance curve"

To check if the burner is suitable for the boiler to which it must be installed, the following parameters are needed:

- furnace input, in kW or kcal/h (kW = kcal/h/860);
- backpressure (data are available on the boiler ID plate or in the user's manual).

Example:

Furnace input: 600kW

Backpressure: 4 mbar

In the "Performance curve" diagram, draw a vertical line matching the furnace input value and an horizontal line matching the backpressure value. The burner is suitable if the intersection point A is inside the performance curve.

Data are referred to standard conditions: atmospheric pressure at 1013 mbar, ambient temperature at 15° C.

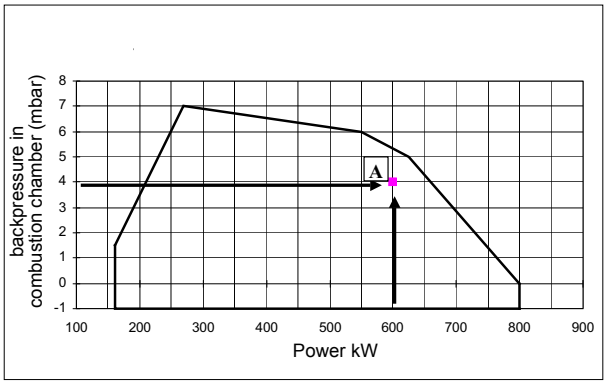

Performance curves

RG1025

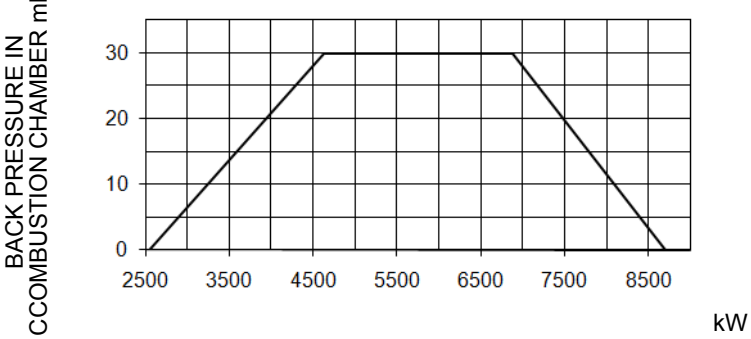

RG1030

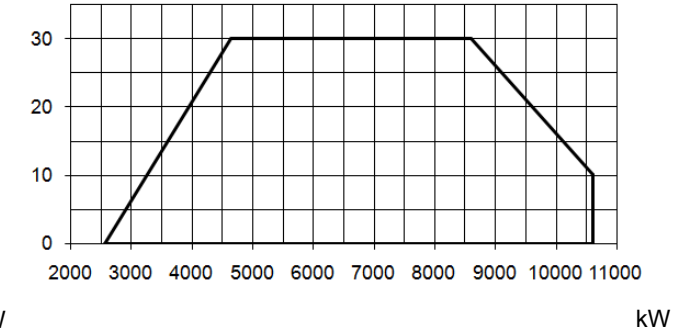

RG1040

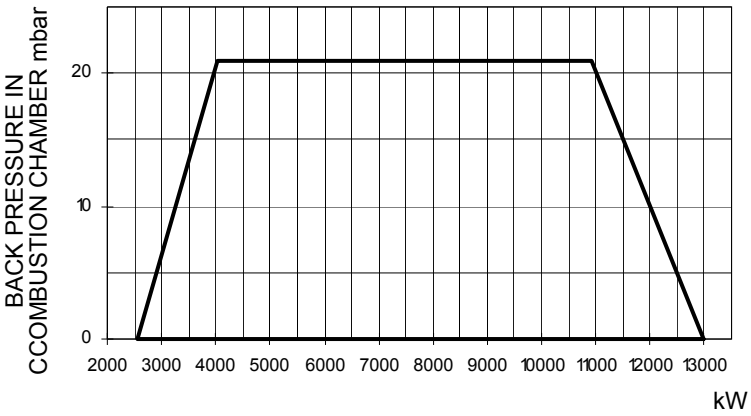

To get the input in kcal/h, multiply value in kW by 860.

Data are referred to standard conditions: atmospheric pressure at 1013mbar, ambient temperature at 15° C

NOTE: The performance curve is a diagram that represents the burner performance in the type approval phase or in the laboratory tests, but does not represent the regulation range of the machine. On this diagram the maximum output point is usually reached by adjsuting the combustion head to its "MAX" position (see paragraph "Adjusting the combustion head"); the minimum output point is reached setting the combustion head to its "MIN" position. During the first ignition, the combustion head is set in order to find a compromise between the burner output and the generator specifications, that is why the minimum output may be different from the Performance curve minimum.

Overall dimensions (mm)

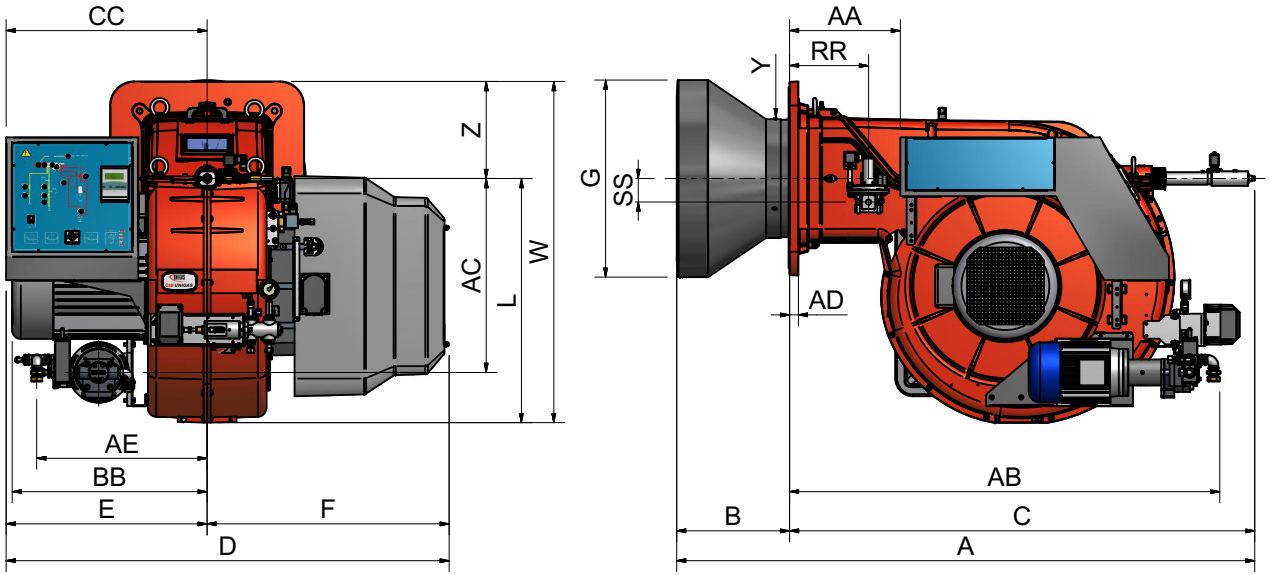

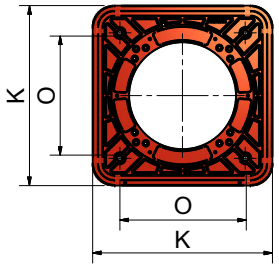

Burner flange

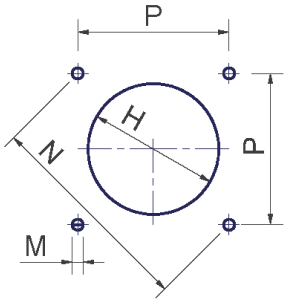

Boiler recommended drilling template

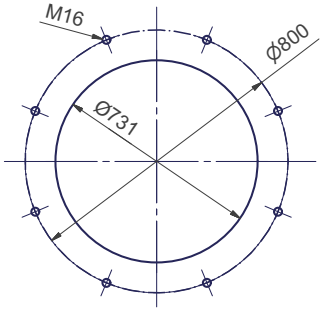

Boiler recommended drilling template

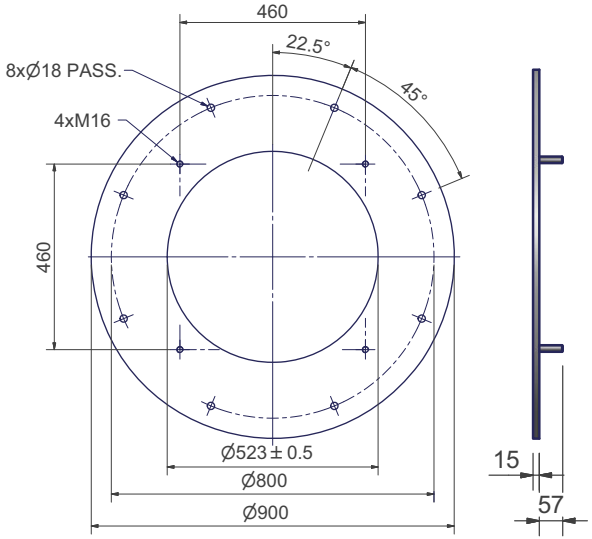

Reccomended counterflange (RG1040)

	A(S*)	A(L*)	AA	AB	AC	AD	AE	B(S*)	B(L*)	BB	C	CC	D	E	F	G	H	K	L	M	N	O	P	RR	SS	W	Y	Z
RG1025	1894	2088	377	1452	651	25	585	348	542	641	1546	680	1502	680	822	370	410	660	816	M16	651	460	460	265	80	1146	379	330
RG1030	1912	2102	377	1452	651	25	585	348	542	657	1564	680	1502	680	822	422	472	660	816	M16	651	460	460	265	80	1146	379	330
RG1040	1959	2153	377	1452	651	25	585	384	578	657	1575	680	1502	680	822	671	-	660	816	-	-	460	-	265	80	1146	412	330

*** S**: measure referred to burner provided with standard blast tube *** L**: measure referred to burner provided with extended blast tube

**** RG1040:** Fit a counterflange between burner and boiler

Fig. 2 - 3I2G-27 v0 **Hydraulic diagram - nozzle M3**

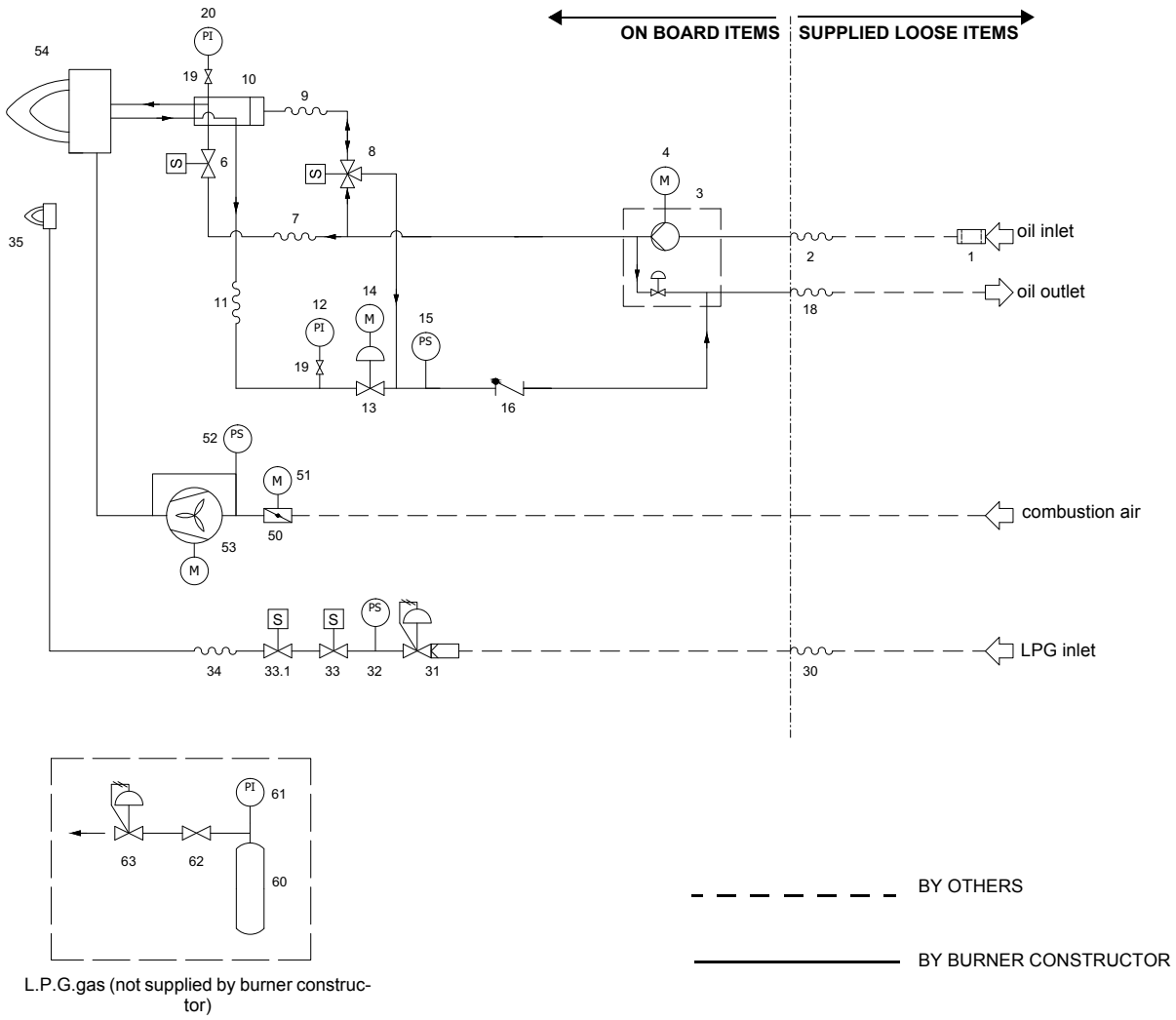

NOTE: The following items are optional: 19, 20, 60, 61, 62, 63

OIL TRAIN

1	Filter
2	Flexible hose
3	Pump and pressure governor
4	Electrical motor
6	Solenoid valve
7	Flexible hose
9	Flexible hose
10	Oil distributor
12	Pressure gauge
13	Pressure governor
14	Actuator
15	Pressure switch
16	One-way valve
18	Flexible hose
19	Manual valve
20	Pressure gauge

COMBUSTION AIR TRAIN

50	Air damper
51	Actuator
52	Pressure switch - PA
53	Draught fan with electromotor
54	Burner

PILOT GAS TRAIN

30	Flexible hose
31	Pressure governor with filter
32	Pressure switch - PGP
33	Solenoid valve
33.1	Solenoid valve
34	Flexible hose
35	Pilot burner
60	LPG Tank
61	Pressure gauge
62	Manual valve
63	Pressure governor x LPG tank

MOUNTING AND CONNECTIONS

Transport and storage

ATTENTION! The equipment must be installed in compliance with the regulations in force, following the manufacturer's instructions, by qualified personnel. All handling operations must be carried out with appropriate resources and qualified personnel

ATTENTION: Use intact and correctly dimensioned hoisting equipment, conforms to the local regulations and health and safety regulations. Do not stand under lifted loads.

If the product must be stored, avoid humid and corrosive places. Observe the temperatures stated in the burner data table at the beginning of this manual.

ATTENTION: READ CAREFULLY THE "WARNINGS2 CHATPER AT THE BEGINNIG OF THIS MANUAL.

Packing

The burners are despatched in wooden cages whose dimensions are:

2270 x 1720 x 1360mm (L x P x H)

Packing cases of this kind are affected by humidity and are not suitable for stacking.
In each packing case, you will find:

- burner;
- flexible hoses;
- light oil filter;
- ceramic fibre plait to be inserted between the burner and the boiler;
- envelope containing this manual.

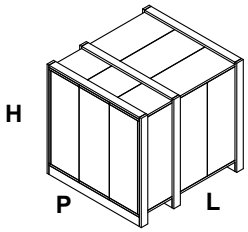

To get rid of the burner's packing and in the event of scrapping of the latter, follow the procedures laid down by current laws on disposal of materials.

Handling the burner

WARNING! The handling operations must be carried out by specialised and trained personnel. If these operations are not carried out correctly, the residual risk for the burner to overturn and fall down still persists.

To move the burner, use means suitable to support its weight (see paragraph "Technical specifications").

The unpacked burner must be lifted and moved only by means of a fork lift truck.

The burner is mounted on a stirrup provided for handling the burner by means of a fork lift truck: the forks must be inserted into the A anb B ways. Remove the stirrup only once the burner is installed to the boiler.

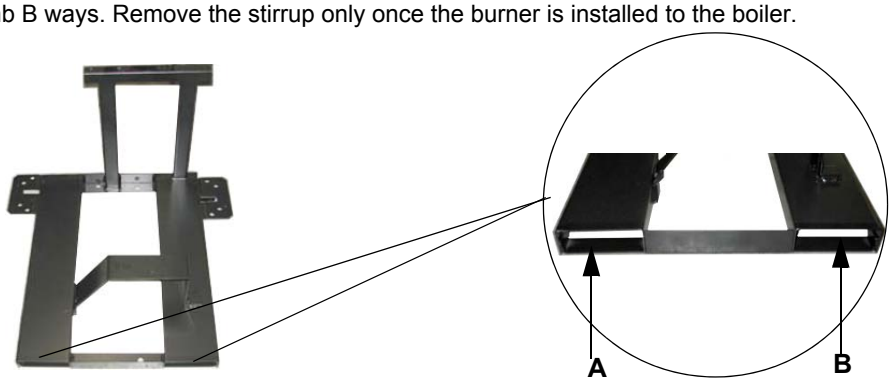

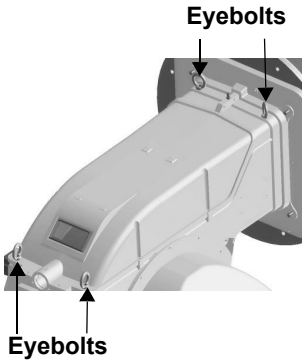

The burner is provided with eyebolts, for handling operations.

Matching the burner to the boiler

The burners described in this manual have been tested with combustion chambers that comply with EN676 regulation and whose dimensions are described in the diagram . In case the burner must be coupled with boilers with a combustion chamber smaller in diameter or shorter than those described in the diagram, please contact the supplier, to verify that a correct matching is possible, with respect of the application involved. To correctly match the burner to the boiler verify the type of the blast tube . Verify the necessary input and the pressure in combustion chamber are included in the burner performance curve; otherwise the choice of the burner must be revised consulting the burner manufacturer. To choose the blast tube lenght follow the instructions of the boiler manufacturer. In absence of these consider the following:

- Cast-iron boilers, three pass flue boilers (with the first pass in the rear part): the blast tube must protrude no more than **Dist** = 100 mm into the combustion chamber. (please see the picture below)
- Pressurised boilers with flame reversal: in this case the blast tube must penetrate **Dm** 50 ÷ 100 mm into combustion chamber in respect to the tube bundle plate.(please see the picture below)

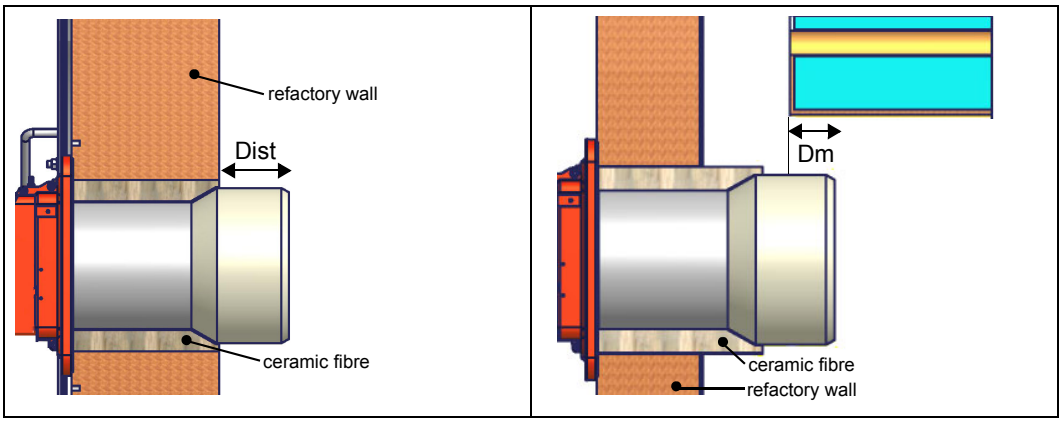

WARNING! Carefully seal the free space between blast tube and the refractory lining with ceramic fibre rope or other suitable means.

The length of the blast tubes does not always allow this requirement to be met, and thus it may be necessary to use a suitably-sized spacer to move the burner backwards or to design a blast tube tha suites the utilisation (please, contact the manifacturer).

Fitting the burner to the boiler

To perform the installation, proceed as follows:

1 drill the furnace plateas decribed in paragraph (“Overall dimensions”);
2 place the burner towards the furnace plate: lift and move the burner by means of its eyebolts placed on the top side (see”Lifting and moving the burner”);
3 screw the stud bolts (5) in the plate holes, according to the burner’s drilling plate described on paragraph “Overall dimensions”;
4 place the ceramic fibre plait on the burner flange;
5 install the burner into the boiler;
6 fix the burner to the stud bolts, by means of the fixing nuts, according to the picture below.
7 After fitting the burner to the boiler, ensure that the gap between the blast tube and the refractory lining is sealed with appropriate insulating material (ceramic fibre cord or refractory cement).

;

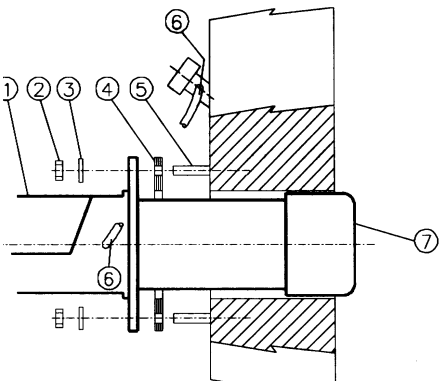

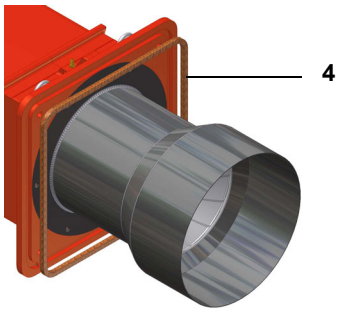

Keys

1 Burner
2 Fixing nut
3 Washer
4 Ceramic fibre plait
5 Stud bolt
7 Blast tube

Pilot gas train

The connection to the pilot gas train must be done according to the following scheme, valid for LPG. In case of natural gas, connect the

pressure goveror (pos. 3) to the natural gas line (maximum input pressure = 1 bar).

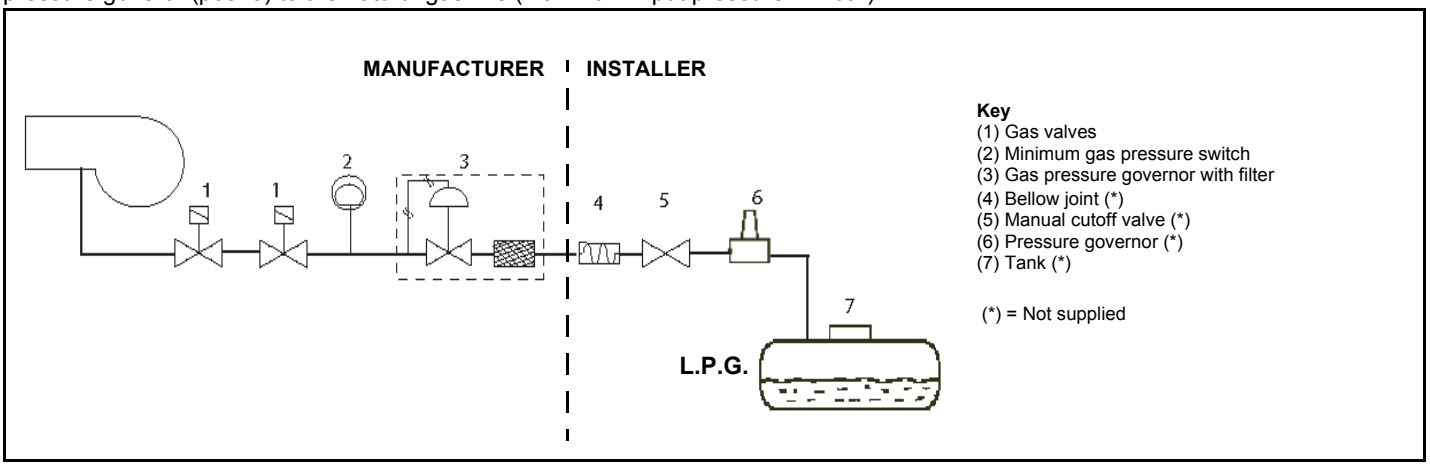

Fig. 3

The pilot gas train is already installed into the burner, the connection from the filter with stabiliser to the gas supply network must be carried out.

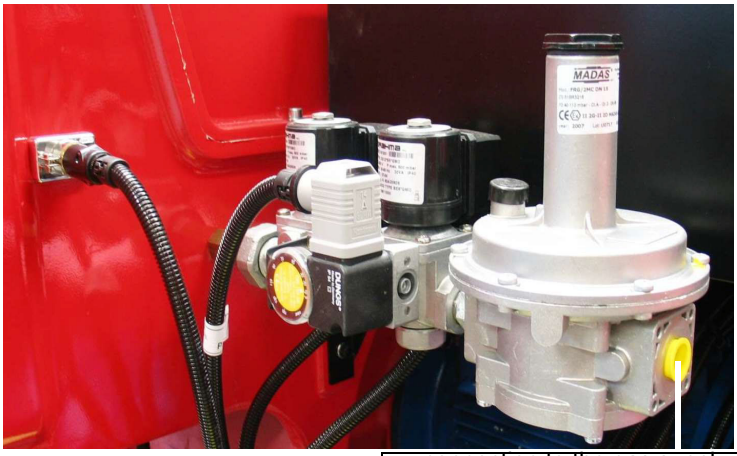

connection to the gas supply network - 1/2”

Once the gas train in installed, execute the electrical connections for all its items (gas valves group, pressure switch).

ATTENTION: once the gas train is mounted according to the diagram on Fig. 3, the gas proving test mus be performed, according to the procedure set by the laws in force.

Electrical connections

	Respect the basic safety rules. make sure of the connection to the earthing system. do not reverse the phase and neutral connections. fit a differential thermal magnet switch adequate for connection to the mains.
	ATTENTION: before executing the electrical connections, pay attention to turn the plant's switch to OFF and be sure that the burner's main switch is in 0 position (OFF) too. Read carefully the chapter "WARNINGS", and the "Electrical connections" section.

	WARNING: The burner is provided with an electrical bridge between terminals 6 and 7; when connecting the high/ low flame thermostat, remove this bridge before connecting the thermostat.
	IMPORTANT: Connecting electrical supply wires to the burner teminal block MA, be sure that the ground wire is longer than phase and neutral ones.

To connect the burner, please refer to the wiring diagram.

To execute the electrical connections, proceed as follows:

1 remove the cover from the electrical board, unscrewing the fixing screws;

2 execute the electrical connections to the supply terminal board as shown in the attached wiring diagrams,

3 check the direction of the fan motor and pump motor (see next pargraph)

4 refit the panel cover

	CAUTION: adjust the thermal cut-out according to the motor rated current value.

Rotation of fan motor and pump motor

Once the burner's electrical connection is accomplished, remember to check the rotation of the fan and pump motors. The motor should rotate in counterclockwise direction looking at motor's cooling fan. In case of incorrect rotation, reverse the three-phase supply and check again the rotation of the motor.

Installation diagram of light oil pipes

PLEASE READ CAREFULLY THE "WARNINGS" CHAPTER AT THE BEGINNING OF THIS MANUAL.

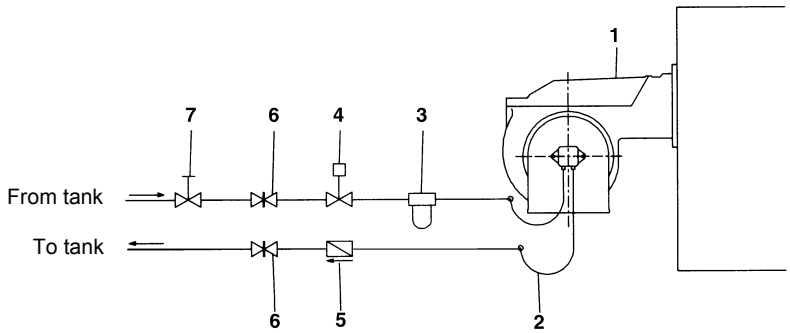

Fig. 4 - Double-pipe system

The burner is supplied with filter and flexible hoses, all the parts upstream the filter and downstream the return flexible hose, must be installed by the customer. As far as the hoses connection, see the related paragraph.

Key

1 Burner

2 Flexible hoses (fitted)

3 Light oil filter (fitted)

4 Automatic interceptor (*)

5 One-way valve (*)

6 Gate valve

7 Quick-closing gate-valve (outside the tank or boiler rooms)

(*) Only for installations with gravity, siphon or forced circulation feed systems. If the device installed is a solenoid valve, a timer must be installed to delay the valve closing.

The direct connection of the device without a timer may cause pump breaks.

Hydraulic diagrams for light oil supplying circuits

Fig. 5 - Gravity circuit

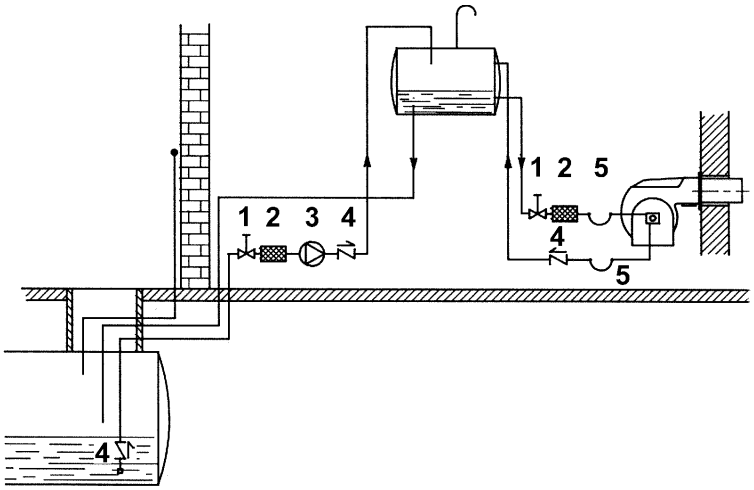

Fig. 6 - Ring circuit

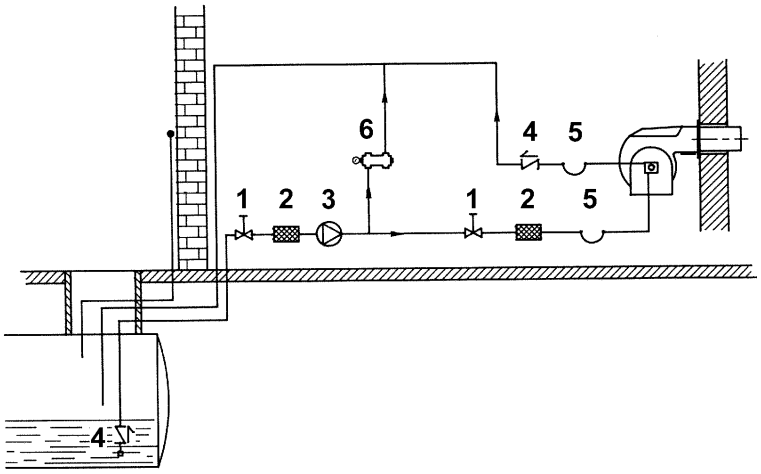

Fig. 7 - Suction circuit

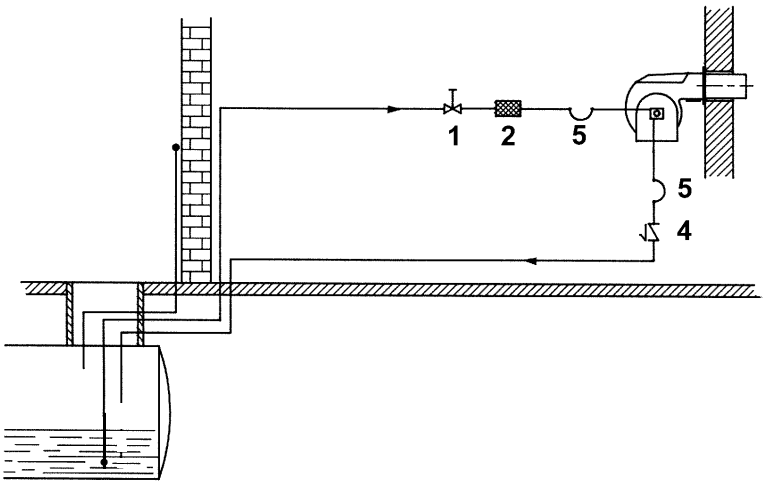

Key

1 Manual valve
2 Light oil filter
3 Light oil feeding pump
4 One way valve
5 Flexible hoses
6 Relief valve

NOTE: in plants where gravity or ring feed systems are provided, install an automatic interception device.

Depending on the installed pump, it is possible to design the plant for single or double pipe feeding line

Single-pipe system: a single pipe drives the oil from the tank to the pump's inlet. Then, from the pump, the pressurised oil is driven to the nozzle: a part comes out from the nozzle while the othe part goes back to the pump. In this system, the by-pass plug, if provided, must be removed and the optional return port, on the pump's body, must be sealed by steel plug and washer.

Double-pipe system: as for the single pipe system, a pipe that connects the tank to the pump's inlet is used besides another pipe that connects the pump's return port to the tank, as well. The excess of oil goes back to the tank: this installation can be considered self-bleeding. If provided, the inside by-pass plug must be installed to avoid air and fuel passing through the pump.

Burners come out from the factory provided for double-pipe systems. They can be suited for single-pipe system (recommended in the case of gravity feed) as decribed before.To change from a 1-pipe system to a 2-pipe-system, insert the by-pass plug **G** (as for ccw-rotation- referring to the pump shaft).

Caution: Changing the direction of rotation, all connections on top and side are reversed.**HP UHE series pumps**: a kit (Art.-Nr.: 0841211) is required for the transition from 2-pipe to 1-pipe system

Suntec T

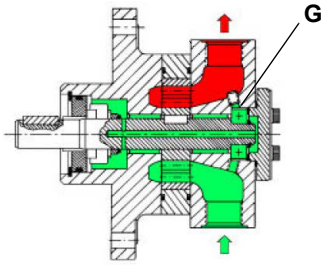

About the use of fuel pumps

- Do not use fuel with additives to avoid the possible formation over time of compounds which may deposit between the gear teeth, thus obstructing them.
- After filling the tank, wait before starting the burner. This will give any suspended impurities time to deposit on the bottom of the tank, thus avoiding the possibility that they might be sucked into the pump.
- On initial commissioning a "dry" operation is foreseen for a considerable length of time (for example, when there is a long suction line to bleed). To avoid damages inject some lubrication oil into the vacuum inlet.
- Care must be taken when installing the pump not to force the pump shaft along its axis or laterally to avoid excessive wear on the joint, noise and overloading the gears.
- Pipes should not contain air pockets. Rapid attachment joint should therefore be avoided and threaded or mechanical seal junctions preferred. Junction threads, elbow joints and couplings should be sealed with removable sg component. The number of junctions should be kept to a minimum as they are a possible source of leakage.
- Do not use PTFE tape on the suction and return line pipes to avoid the possibility that particles enter circulation. These could deposit on the pump filter or the nozzle, reducing efficiency. Always use O-Rings or mechanical seal (copper or aluminium gaskets) junctions if possible.
- An external filter should always be installed in the suction line upstream the fuel unit.
-

***ATTENTION**: before the burner first start, it is mandatory to fill the adduction pipes with diesel fuel and bleed out residual air bubbles. Prior to switching on the burner, check direction of rotation of the pump motor by briefly pressing the starter switch; ensure there are no anomalous sounds during equipment operation, and only then turn on the burner. Neglect to comply with this requirement will invalidate the burner warranty.*

Oil pumps

Suntec T..	
Viscosity	3 - 75 cSt
Oil temperature	0 - 150 °C
Minimum suction pressure	- 0.45bar to prevent gasing
Maximum suction pressure	5 bar
Rated speed	3600 rpm max.

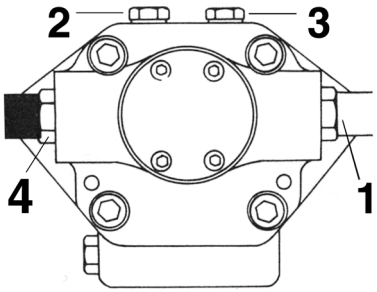

Key

1 Inlet G3/4
2 Pressure gauge port G1/4
3 Vacuum gauge port to measure the inlet vacuum G1/4
4 To pressure adjusting valve G3/4

"Note: pump with "C" rotation.

Suntec TV Pressure governor

Pressure adjustment

Remove cap-nut 1 and the gasket 2, unscrew the lock nut 4. To increase pressure, twist adjusting screw 3 clockwise.

To decrease the pressure, twist screw counterclockwise. Tight the lock nut 4, refit the gasket 2 and the cap nut 1.

Key

1 Cap nut
2 Gasket
3 Adjusting screw
4 Lock nut
5 Gasket

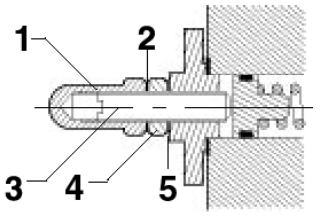

Fig. 8

Connecting the oil flexible hoses to the pump

To connect the flexible oil hoses to the pump, proceed as follows, according to the pump provided:

1 remove the closing nuts A and R on the inlet and return connections of the pump;

2 screw the rotating nut of the two flexible hoses on the pump **being careful to avoid exchanging the lines**: see the arrows marked on the pump.

For further information, refer to the technical documentation of the pump.

.

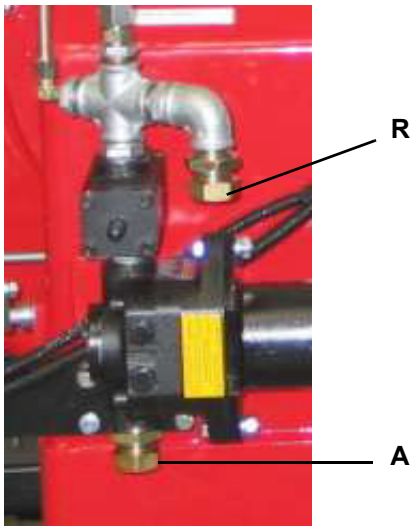

ADJUSTMENTS

Adjustments - brief description

⚠	***ATTENTION:*** **before starting the burner up, be sure that the manual cutoff valves are open. Be sure that the mains switch is closed.**
	Before starting up the burner, make sure that the return pipe to the tank is not obstructed. Any obstruction would cause the pump seal to break.
	.ATTENTION: During commissioning operations, do not let the burner operate with insufficient air flow (danger of formation of carbon monoxide); if this should happen, make the fuel decrease slowly until the normal combustion values are achieved.

⚠	**IMPORTANT! the combustion air excess must be adjusted according to the in the following chart:**

Recommended combustion parameters		
Fuel	***Recommended (%) CO_2***	***Recommended (%) O_2***
Light oil	11.5 ÷ 13	2.9 ÷ 4.9

Adjusting the pilot gas flow rate: gas valve Brahma EG12xR and pressure governor

To change the pilot gas valve flow rate, proceed as follows:

1 remove the protection on the bottom of the valve, moving it counterclockwise (see next picture);

2 rotate clockwise the nut 1 as shown in to close the valve or counterclockwise to open.

To perform gas pressure adjustment, act on the pressure governor as follows (see next picture):

3 remove the cap **T**: to increase the gas pressure at the outlet use a screwdriver on the screw **TR** as shown in the next picture. Screw to increase the pressure, unscrew to decrease; once the regulation is performed, replace cap **T**.

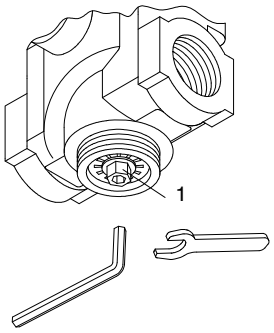

Brahma gas valve EGRx12

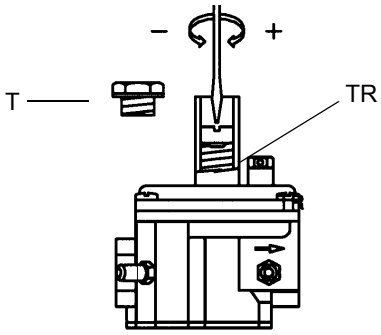

Gas pressure governor

Adjustments - brief description

The air and fuel rates adjustments must be performed at the maximum ouptput first (“high flame”): see the LMV2.. related manual..

- Check that the combustion parameters are in the suggested limits.
- Then, adjust the combustion values by setting the “fuel/air” ratio” curvepoints (see the LMV2.. related manual).
- Set, now, the low flame output, in order to avoid the low flame output increasing too much or that the flues temperature gets too low to cause condensation in the chimney.

User interface

The AZL2x.. display is shown below:

The keys functions are the following:

Key F

Used to adjust the “fuel” actuator position (**F**uel): :

While pressing the **F** key, the “fuel” actuator position can be changed by means of the **+** and **-** keys.

Key A

Used to adjust the “air” actuator position (**A**ir):

While pressing the **A** key, the “air” actuator position can be changed by means of the **+** and **-** keys.

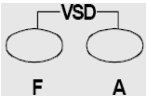

Key F + A

While pressing the two keys contemporarly, the **code** message will appear: by entering the proper password it is possible to access the **Service** mode.

Info and Enter keys

Used for **Info** and **Service** menues

Used as **Enter** key in the setting modes

Used as **Reset** key in the burner operation mode

Used to enter a lower level menu

-Key -

Used to decrease a a value

Used to enter Info and Serivce during the curve adjustments

+Key +

Used to increase a a value

Used to enter Info and Serivce during the curve adjustments

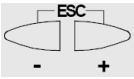

Keys (+ & -)= ESC

By pressing + and - at the same time, the ESCAPE function is perfomed:

to enter a lower level menu

The display will show these data:

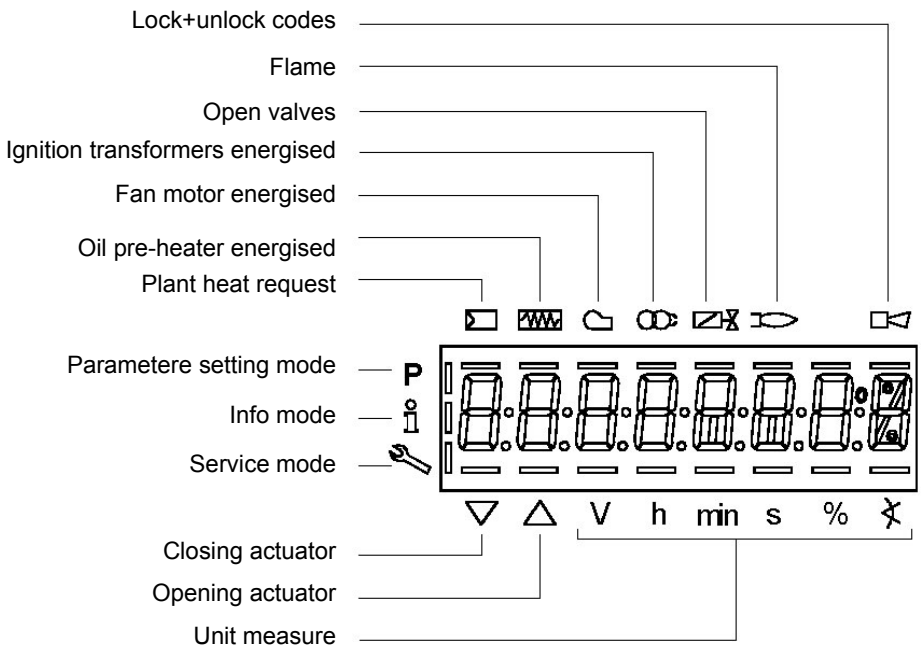

The display will show these data:

Setting menu

The setting menu is divided into different blocks:

Bloc.	Descrizione	Description	Password
100	Informazioni generali	General	OEM / Service / Info
200	Controllo bruciatore	Burner control	OEM / Service
400	Curve rapporto	Ratio curves	OEM / Service
500	Controllo rapporto	Ratio control	OEM / Service
600	Servocomandi	Actuators	OEM / Service
700	Storico errori	Error history	OEM / Service / Info
900	Dati di processo	Process data	OEM / Service / Info

The accesses to the various blocks are allowed by passwords. Passwords are divided into three levels:

- User level (info): no password needed
- Service level (Service)
- Manifacturer level (OEM)

PHASES LIST

During operation, the following program phases are shown. The meaning for each phase is quoted in the table below

Fase /Phase	Funzione	Function
Ph00	Fase blocco	Lockout phase
Ph01	Fase di sicurezza	Safety phase
Ph10	t10 = tempo raggiungimento posizione riposo	t10 = home run
Ph12	Pausa	Standby (stationary)
Ph22	t22 = tempo di salita ventilatore (motore ventilatore = ON, valvola intercettazione di sicurezza = ON)	t22 = fan ramp up time (fan motor = ON, safety shutoff valve = ON)
Ph24	Verso posizione preventilazione	Traveling to the prepurge position
Ph30	t1 = tempo preventilazione	t1 = prepurge time
Ph36	Verso posizione accensione	Traveling to the ignition position
Ph38	t3 = tempo preaccensione	t3 = preignition time
Ph40	TSA1 = primo tempo sicurezza (trasformatore accen-sione ON)	TSA1= 1st safety time (ignition transformer ON)

Ph42	TSA1 = primo tempo sicurezza (trasformatore accensione OFF)	TSA1 = 1st safety time (ignition transformer OFF) t42 = preignition time OFF
Ph44	t44 = intervallo 1	t44 = interval 1
Ph50	TSA2 = secondo tempo sicurezza	TSA2 = 2nd safety time
Ph52	t52 = intervallo 2	t52 = interval 2
Ph60	Funzionamento 1 (stazionario)	Operation 1 (stationary)
Ph62	t62 = massimo tempo bassa fiamma (funzionamento 2, in preparazione per spegnimento, verso bassa fiamma)	t62 = max. time low-fire (operation 2, preparing for shutdown, traveling to low-fire)
Ph70	t13 = tempo postcombustione	t13 = afterburn time
Ph72	Verso posizione postcombustione	Traveling to the postpurge position
Ph74	t8 = tempo postventilazione	t8 = postpurge time
Ph80	t80 = tempo evacuazione controllo tenuta valvole	t80 = valve proving test evacuation time
Ph81	t81 = tempo perdita pressione atmosferica, prova atmosferica	t81 = leakage time test time atmospheric pressure, atmospheric test
Ph82	t82 = test perdita, test riempimento	t82 = leakage test filling test, filling
Ph83	t83 = tempo perdita pressione gas, test pressione	t83 = leakage test time gas pressure, pres sure test
Ph90	Tempo attesa “mancanza gas”	Gas shortage waiting time

Entering the Parameter levels

By means of a proper use of the keys, it is possible to enter the various level parameters, as shown in the following flow chart:

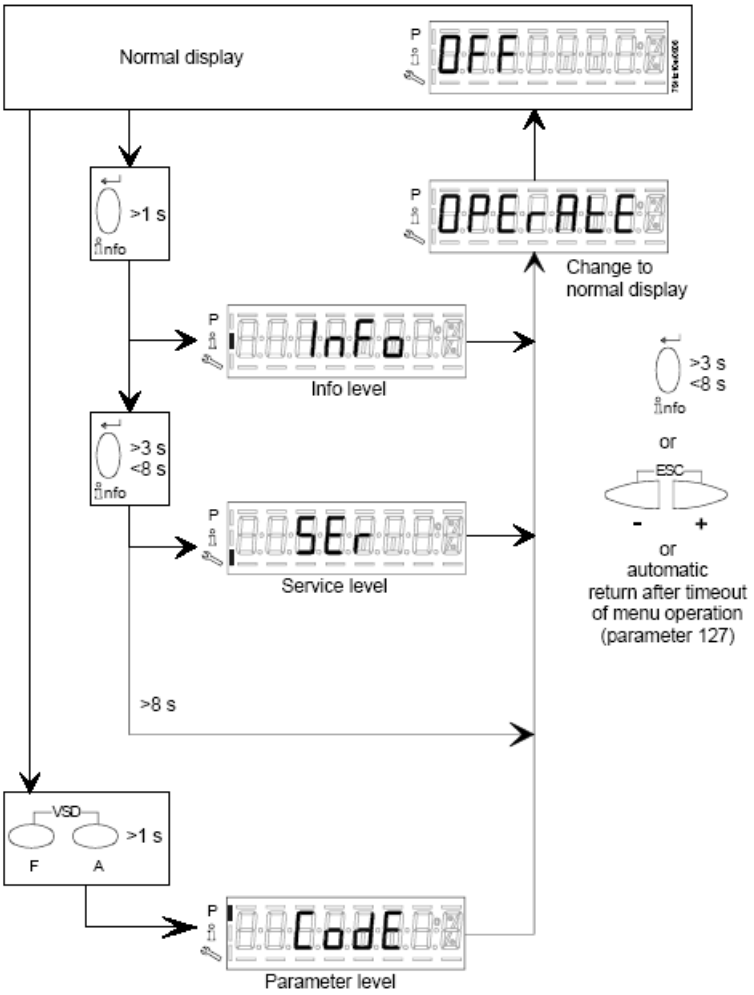

The burner and consequently the LMV2x.. are factory set; the air and fuel curves as set as well.

Info level

To enter the **Info** level, proceed as follows:

1 in any menu position, press keys **+** and **-** at the same time, then the program will start again: the display will show **OFF**.

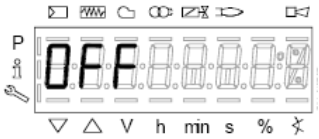

2 until the display will show **InFo**, Press the **enter (InFo)** key

3 then il will show the first code (167) flashing, on the right side it will show the data entered. By pressing **+** or **-** it is possible to scroll (up or down) the parameter list.

4 If a dot-line is shown on the right, there is no enough room for complete visualisation: press **enter** again the data will be completely shown for 1 to 3 seconds. By pressing **enter** or **+** and**-** at the same time, the system will exit the parameter visualisation and go back to the flashing number.

The **Info** level shows some basic parameters as:

Parameter	***Description***
167	Cubic meters of fule (resettable)
162	Operating hours (resettable)
163	Device operating hours
164	Burners start-ups (resettable)
166	Total number of start-ups
113	Burner number (i.e. serial number)
107	Software version
102	Software date
103	Device serial number
104	Customer code
105	Version
143	Free

5 Example: choose parameter 102 to show the date

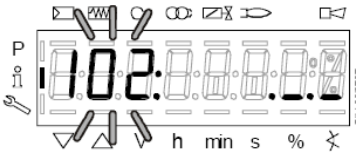

the display shows parameter **102** flashing on the left and characters **._._** on the right.

6 press InFo for 1-3 seconds: the date will appear

7 press InFo to go back to parameter “102”

8 by pressing + / -, it is possible to scroll up/down the parameter list (see table above), or, by pressing ESC or InFo for more seconds, the display will show

9 Once the last parameter is accessed (143) by pressing **+** , the **End** message will flash.

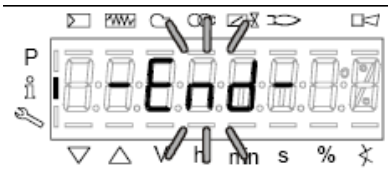

10 Press **InFo** for more than three seconds or for more than three seconds orto return to the normal display.

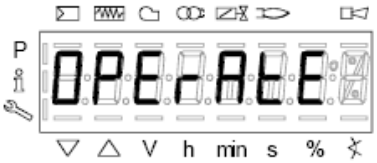

If a message like the one below is shown during operation,

it means that the burner is locked out and the Errore code is shown (in the example “error code:4”); this message is alternating with another message

Diagnostic code (in the example “diagnostic code:3”). Record the codes and find out the fault in the Error table.
To perform the reset, press InFo for one second:

The unit displays an event which does not lead to shutdown.
The display shows current error code **c:** alternating with diagnostic code **d**:

.
Press **InFo** to return to the display of phases.
Example: Error code **111** / diagnostic code 0

To reset, press InFo for a second. Record the codes and check the Error List to find the type of faults.

Service level
To enter the Service mode, press InFo until the display will show:

The service level shows all the information about flame intensity, actuators position, number and lock codes:

Parameter	***Description***
954	Flame intensity
121	% output, if set = automatic operation
922	Actuators position, 00=combustibile; 01= aria
161	Lock-outs number
701..725	Lock-outs History (see chapter 23 in the LMV2x manual)

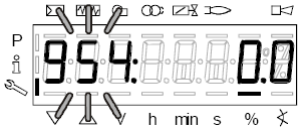

1 .the first parameter will be “954”: the percentage of flame is shown on the right. By pressinf + or - it is possible to scroll up/down the parameter list.

2 Once the last parameter is accessed (143) by pressing **+** , the **End** message will blink.

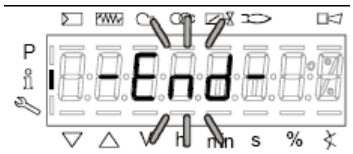

3 Press **InFo**

for more than three seconds or for more than three seconds orto return to the normal display.

For further nformation, see tha LMV2 related manual.

Light oil nozzles

The fuel rate is adjusted by choosing a properly dimensioned nozzle (spill-back type) and adjusting the inlet and return pressure following the directions showed in the next table.

	NOZZLE SUPPLY PRESSURE bar	HIGH FLAME RETURN PRESSURE bar	LOW FLAME RETURN PRESSURE bar
NOZZLE	25	18-21 (recommended)	7 (recommended)

FLUIDICS NOZZLE: REFERENCE DIAGRAM (INDICATIVE ONLY)

DIMENSIONS	FLOW RATE kg/h		Indicative pessure on return (bar)
	Min	Max	
40	13	40	19
50	16	50	22
60	20	60	20
70	23	70	23
80	26	80	23
90	30	90	22
100	33	100	22
115	38	115	21
130	43	130	22
145	48	145	21
160	53	160	21
180	59	180	22
200	66	200	21
225	74	225	22
250	82	250	22
275	91	275	22
300	99	300	23
330	109	330	23
360	119	360	22
400	132	400	22
450	148	450	22
500	165	500	22
550	181	550	22
600	198	600	23
650	214	650	23
700	231	700	23
750	250	750	23
800	267	800	22

Tab. 1

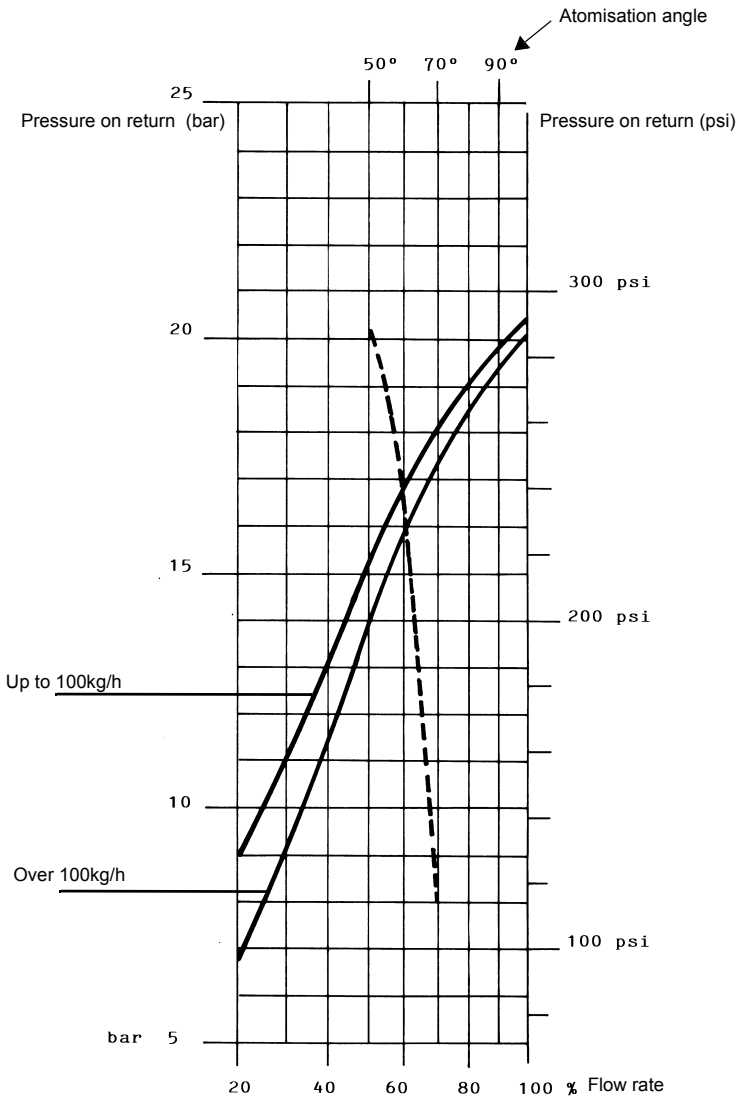

NOZZLE SUPPLY PRESSURE = 25 bar

- - - - - Atomisation angle according to the return pressure

——— % Flow rate

viscosity at nozzle = 5 cSt

ATTENTION! To achieve the maximum flow rate close completely the return line.

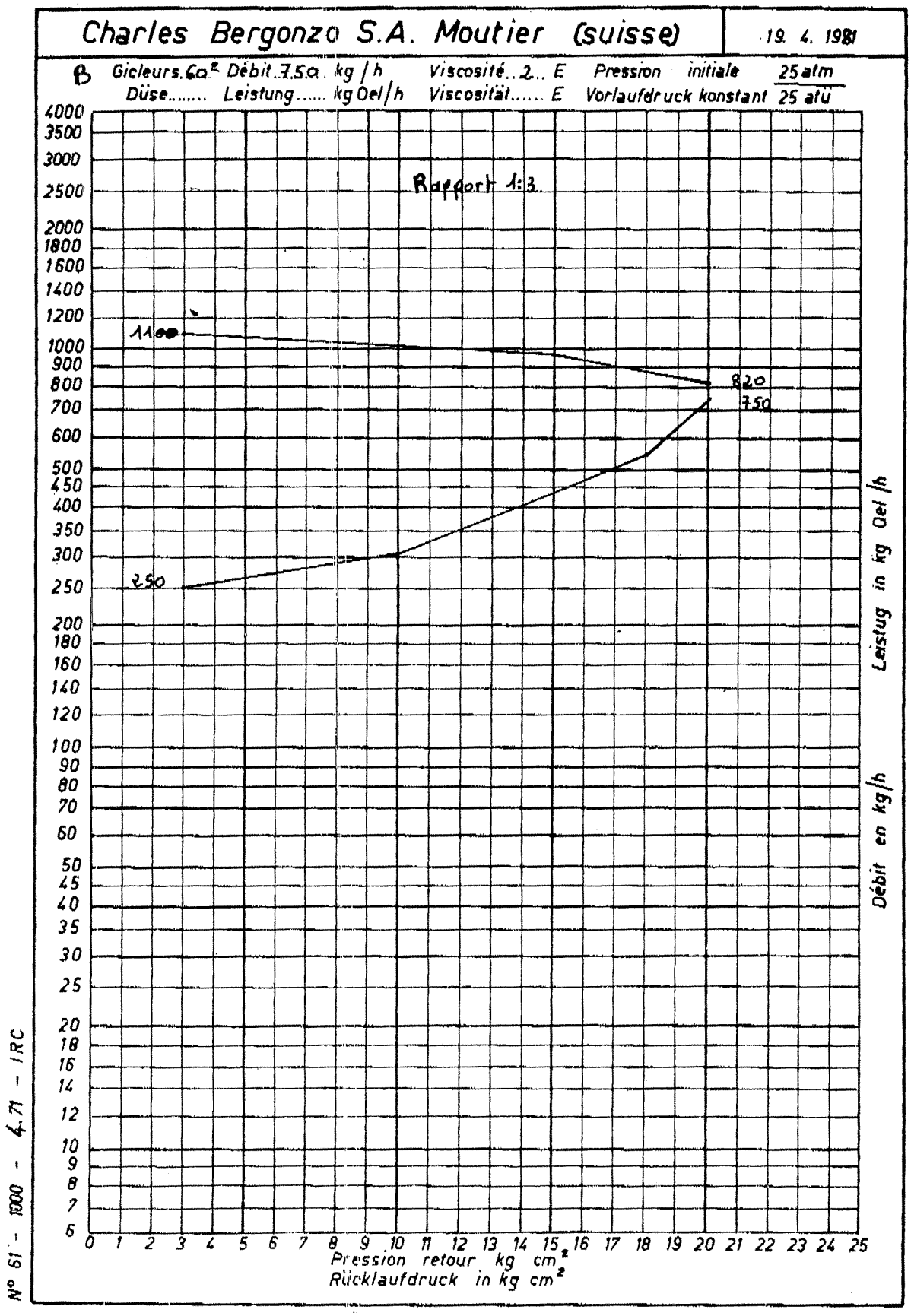
Charles Bergonzo S.A. Moutier (suisse)
19. 4. 1981
B Gicleurs 60° Débit 750 kg / h Viscosité 2 E Pression initiale 25 atm
Düse..... Leistung..... kg Oel/h Viscosität..... E Vorlaufdruck konstant 25 atü
Rapport 1:3
1100
820
750
250
Leistug in kg Oel/h
Débit en kg/h
Pression retour kg cm²
Rücklaufdruck in kg cm²
N° 61 - 1000 - 4.71 - IRC

Fig. 9

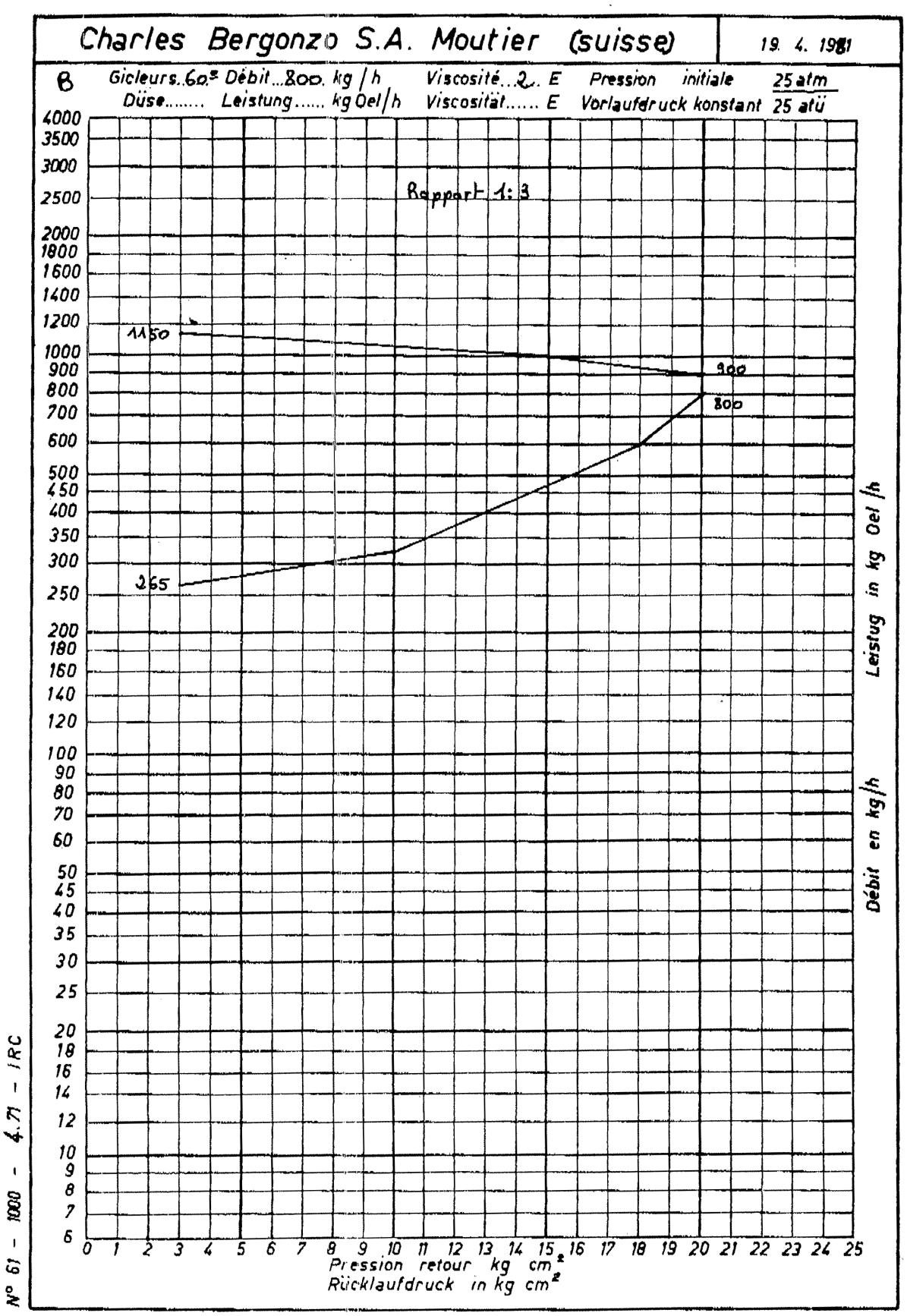
Charles Bergonzo S.A. Moutier (suisse)
19. 4. 1981
B
Gicleurs..60° Débit...800. kg / h
Viscosité...2.. E
Pression initiale 25 atm
Düse..... Leistung..... kg Oel/h
Viscosität..... E
Vorlaufdruck konstant 25 atü
Rapport 1:3
1150
900
800
265
Leistug in kg Oel/h
Débit en kg/h
Pression retour kg cm²
Rücklaufdruck in kg cm²
N° 61 - 1000 - 4.71 - IRC

Fig. 10

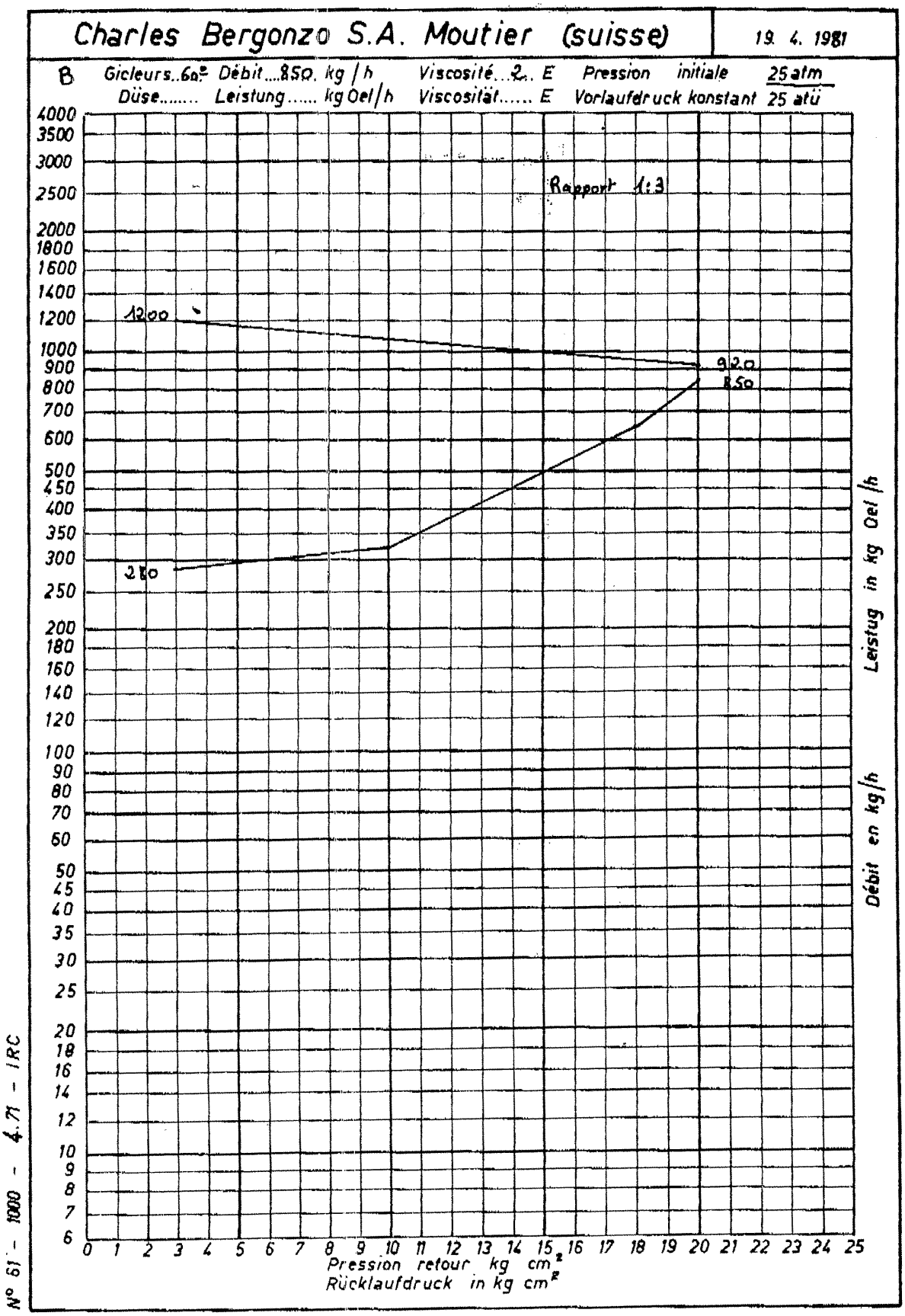
Charles Bergonzo S.A. Moutier (suisse)
19. 4. 1981
B Gicleurs..6a.. Débit...850. kg/h Viscosité...2.. E Pression initiale 25 atm
Düse..... Leistung..... kg Oel/h Viscosität..... E Vorlaufdruck konstant 25 atü
Rapport 1:3
1200
920
850
280
Leistug in kg Oel/h
Débit en kg/h
Pression retour kg cm²
Rücklaufdruck in kg cm²
N° 61 - 1000 - 4.71 - IRC

Fig. 11

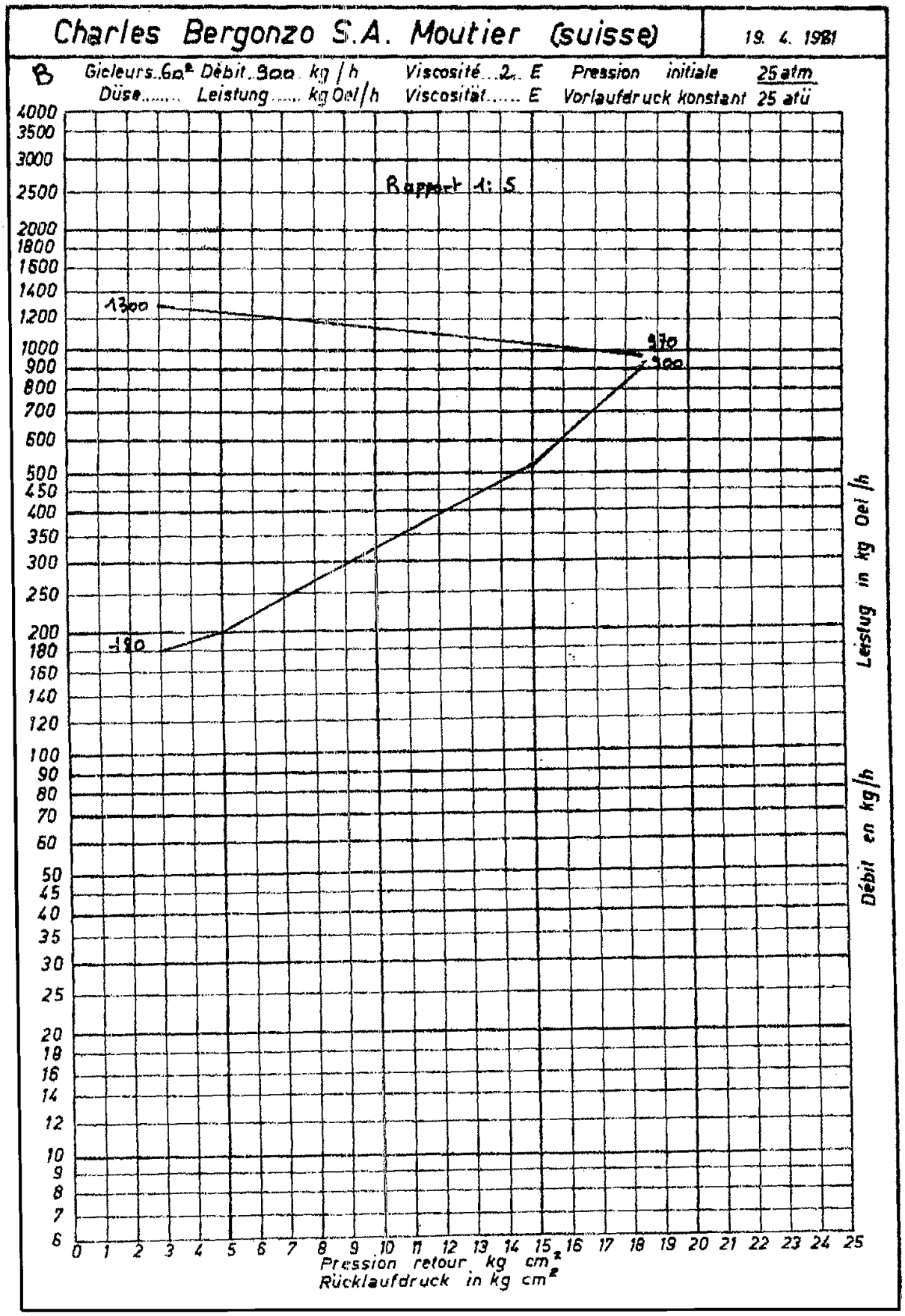
Charles Bergonzo S.A. Moutier (suisse)
19. 4. 1981
B
Gicleurs 60° Débit 900 kg/h
Viscosité 2 E
Pression initiale 25 atm
Düse
Leistung kg Oel/h
Viscosität E
Vorlaufdruck konstant 25 atü
Rapport 1:5
1300
970
900
180
Leistug in kg Oel/h
Débit en kg/h
Pression retour kg cm²
Rücklaufdruck in kg cm²

Fig. 12

Oil Flow Rate Settings

1 with the electrical panel open, prime the oil pump acting directly on the related **CP** contactor (see next picture): check the pump motor rotation and keep pressing for some seconds until the oil circuit is charged;

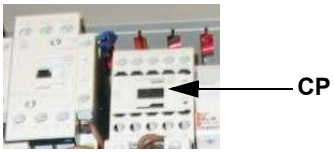

2 bleed the air from the **M** pressure gauge port by loosing the cap without removing it, then release the contactor.

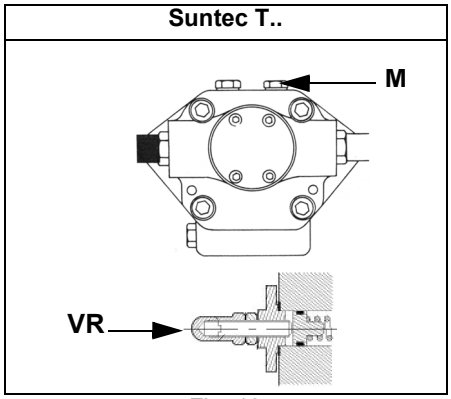

Fig. 13

3 As for setting the fuel/air ratio curve, see the LMV related manual.

4 Only if necessary, adjust the supply pressure as follows;insert a pressure gauge into the port shown on figure and act on on the pump adjusting screw **VR**. Pressure values are indicated at the beginning of this paragraph.

5 In order to get the maximum oil flow rate, adjust the pressure (reading its value on the **PG** pressure gauge) , checking always the combustion parameters.

Turn the burner off; then start it up again. If the adjustment is not correct, repeat the previous steps.

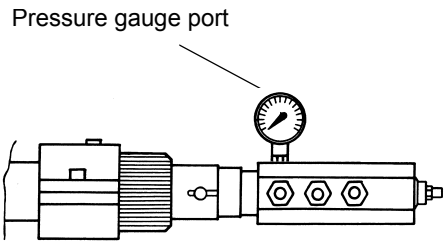

Fig. 14

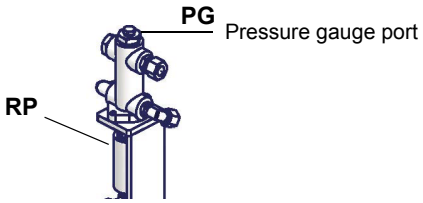

Fig. 15

Fully-modulating burners

.To adjust the fully-modulating burners, use the **CMF** switch on the burner control panel (see next picture), instead of the **TAB** thermostat as described on the previous paragraphs about the progressive burners. Go on adjusting the burner as described before, paying attention to use the CMF switch intead of **TAB**.

The **CMF** position sets the oprating stages: to drive the burner to the high-flame stage, set CMF=1; to drive it to the low-flame stage, set CMF=2.

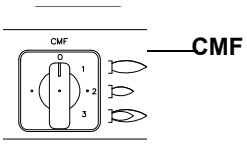

CMF = 0 stop at the current position
CMF = 1 high flame operation
CMF = 2 low flame operation
CMF = 3 automatic operation

Adjusting the combustion head

To let the burner operate at a lower output, loose the **VB** screw and move progressively back the combustion head towards the MIN

position, by turning clockwise the **VRT** ring nut. Fasten **VB** screw when the adjustment is accomplished.

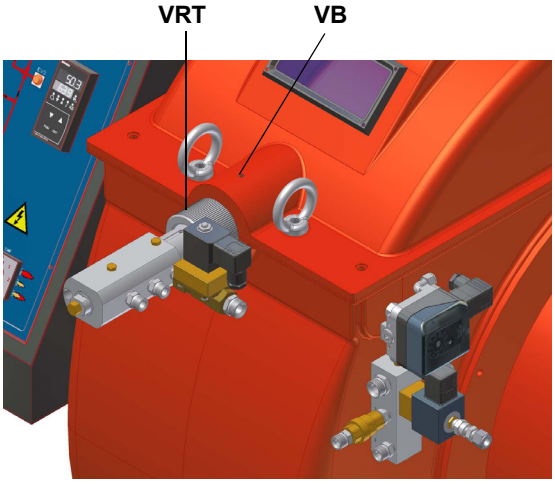

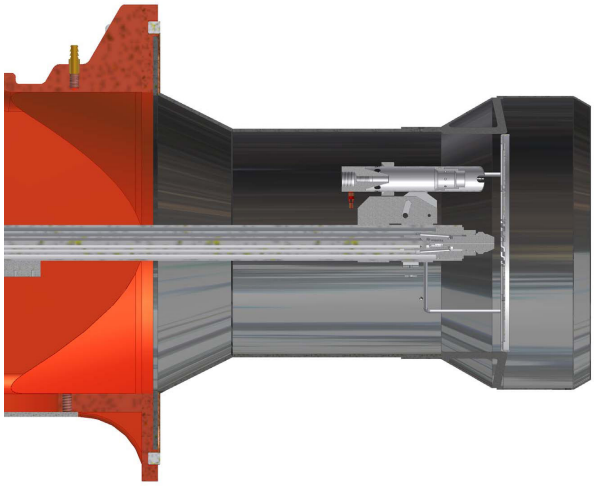

"MAX"head position

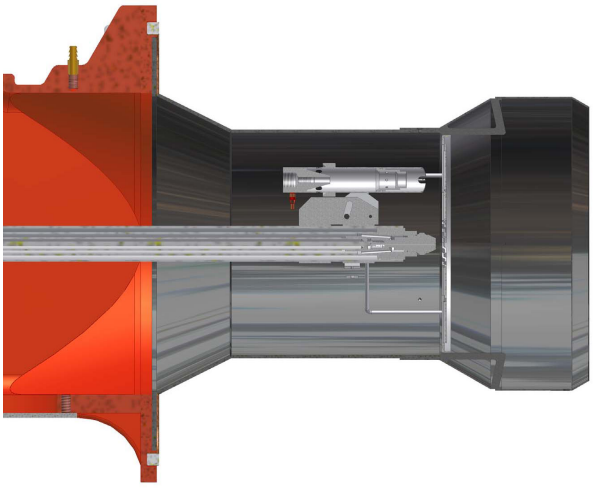

head position

Calibration of air pressure switch

To calibrate the air pressure switch, proceed as follows:

- Remove the transparent plastic cap.
- Once air and gas setting have been accomplished, startup the burner.
- During the pre-purge phase o the operation, turn slowly the adjusting ring nut **VR** in the clockwise direction until the burner lockout, then read the value on the pressure switch scale and set it to a value reduced by 15%.
- Repeat the ignition cycle of the burner and check it runs properly.
- Refit the transparent plastic cover on the pressure switch.

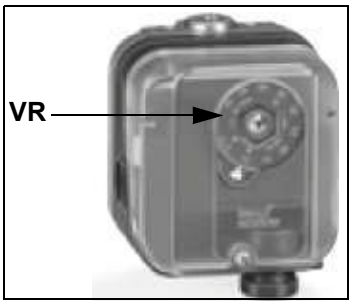

Maximum oil pressure switch

The oil pressure switch on the return line, checks that the pressure does not exceed a default value. This value must not be higher than the maximum acceptable pressure on the return line (this value is reported on the specification table). A pressure change on the return line could affect the combustion parameters: for this reason, the pressure switch must be set, say, at 20% over the pressure recorded during the combustion adjustment. The factory setting is 4 bar.

It is recommended to verify that the combustion parameters are within the range of acceptable values even against a pressure variation that gets close to the limit of the pressure switch.

This check should be carried out along the whole range of the burner output.

In case of inacceptable values, reduce from 20% to 15% the overpressure; later on, repeat the adjustments described above.

Minimum oil pressure switch (when provided)

The minimum oil pressure switch on the inlet line, checks that the pressure does not drop below a default value. The pressure switch must be set, say, at 10% under the pressure at the nozzle.

Oil pressure switch adjustment

Follow the below instruction, according to the pressure switch installed.

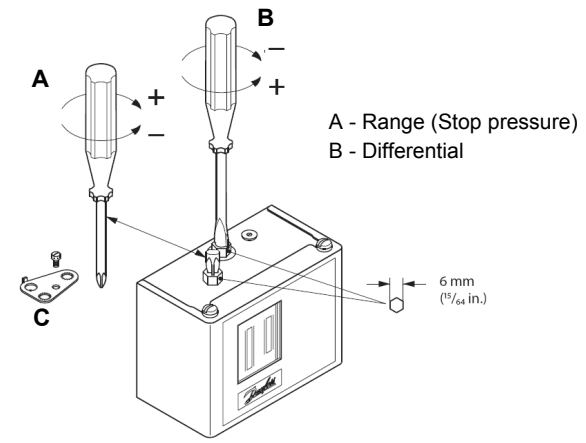 NB: Remove lockplate (C) before adjustment	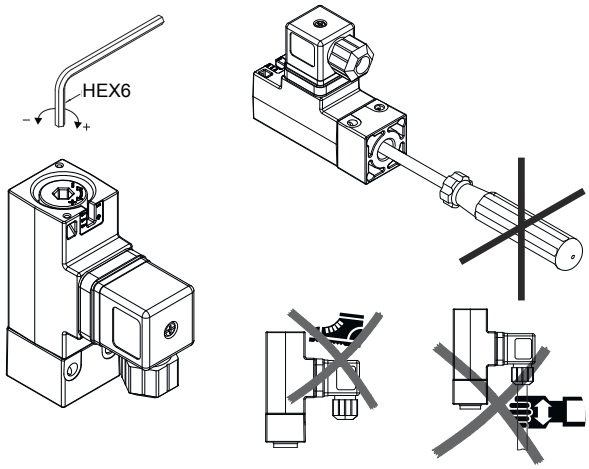
Danfoss KP..	**Trafag Picostat 9B4..**

PART II: OPERATION

LIMITATIONS OF USE

THE BURNER IS AN APPLIANCE DESIGNED AND CONSTRUCTED TO OPERATE ONLY AFTER BEING CORRECTLY CONNECTED TO A HEAT GENERATOR (E.G. BOILER, HOT AIR GENERATOR, FURNACE, ETC.), ANY OTHER USE IS TO BE CONSIDERED IMPROPER AND THEREFORE DANGEROUS.

THE USER MUST GUARANTEE THE CORRECT FITTING OF THE APPLIANCE, ENTRUSTING THE INSTALLATION OF IT TO QUALIFIED PERSONNEL AND HAVING THE FIRST COMMISSIONING OF IT CARRIED OUT BY A SERVICE CENTRE AUTHORISED BY THE COMPANY MANUFACTURING THE BURNER.

A FUNDAMENTAL FACTOR IN THIS RESPECT IS THE ELECTRICAL CONNECTION TO THE GENERATOR'S CONTROL AND SAFETY UNITS (CONTROL THERMOSTAT, SAFETY, ETC.) WHICH GUARANTEES CORRECT AND SAFE FUNCTIONING OF THE BURNER.

THEREFORE, ANY OPERATION OF THE APPLIANCE MUST BE PREVENTED WHICH DEPARTS FROM THE INSTALLATION OPERATIONS OR WHICH HAPPENS AFTER TOTAL OR PARTIAL TAMPERING WITH THESE (E.G. DISCONNECTION, EVEN PARTIAL, OF THE ELECTRICAL LEADS, OPENING THE GENERATOR DOOR, DISMANTLING OF PART OF THE BURNER).

NEVER OPEN OR DISMANTLE ANY COMPONENT OF THE MACHINE.

OPERATE ONLY THE MAIN SWITCH, WHICH THROUGH ITS EASY ACCESSIBILITY AND RAPIDITY OF OPERATION ALSO FUNCTIONS AS AN EMERGENCY SWITCH, AND ON THE RESET BUTTON.

IN CASE OF A BURNER SHUT-DOWN, RESET THE CONTROL BOX BY MEANS OF THE RESET PUSHBUTTON. IF A SECOND SHUT-DOWN TAKES PLACE, CALL THE TECHNICAL SERVICE, WITHOUT TRYING TO RESET FURTHER.

WARNING: DURING NORMAL OPERATION THE PARTS OF THE BURNER NEAREST TO THE GENERATOR (COUPLING FLANGE) CAN BECOME VERY HOT, AVOID TOUCHING THEM SO AS NOT TO GET BURNT.

OPERATION

⚠	***ATTENTION:*** **before starting the burner up, be sure that the manual cutoff valves. Check that the mains switch is closed.**

Light oil operation

- The fan motor starts and the pre-purge phase as well. Since the pre-purge phase must be carried out at the maximum air rate, the control box drives the actuator opening and when the maximum opening position is reached, the pre-purge time counting starts.
- At the end of the pre-purge time, the actuator is in the light oil ignition position: the ignition transformer is energised (lamp **B4** on); the ignitor gas valves (if provided) and the light oil valves open. Few seconds after the valves opening, the transformer is de-energised and lamp **B4** turns off.
- The burner is now operating, meanwhile the actuator goes to the high flame position; after some seconds, the two-stage operation begins; the burner is driven automatically to high flame or low flame, according to the plant requirements.Operation in high or low flame is signalled by LED **B2** on the burner control panel.

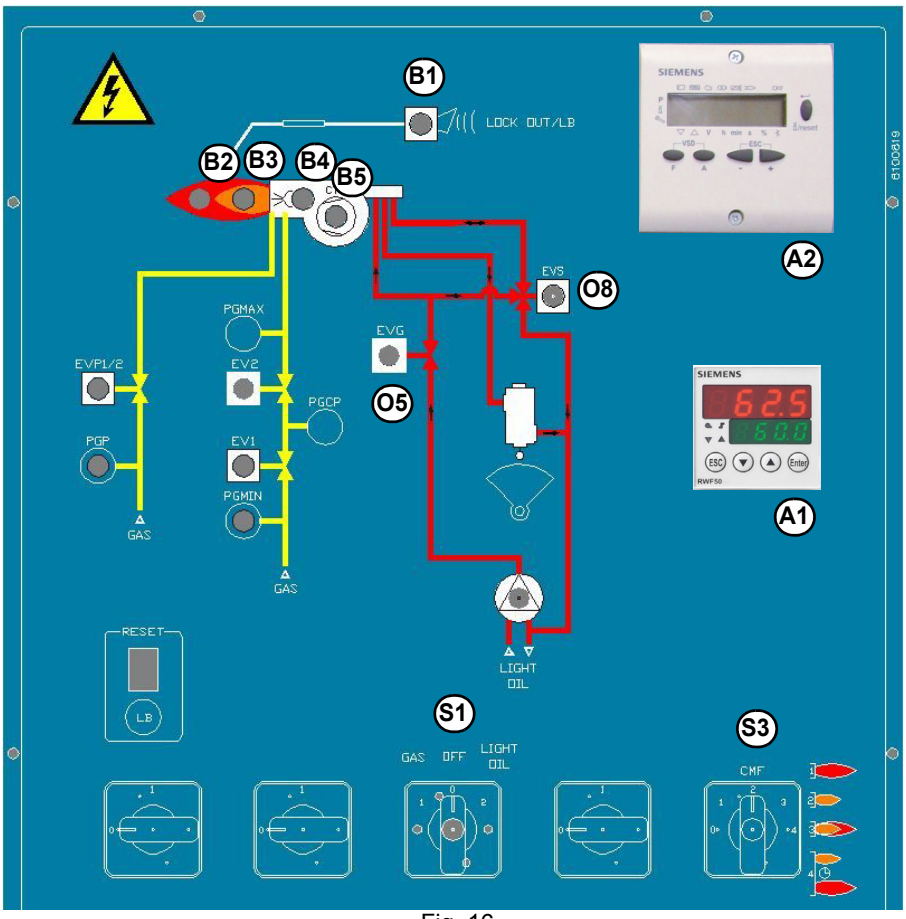

Fig. 16

Keys

S1 Main switch
S3 CMF switch (0=stop, 1=low flame, 2=high flame, 3=automatic) - fully modulating burners only
D Gas proving system reset pushbutton (only for burners with Siemens LDU11 provided)
B1 Lock-out LED
B2 Hi-flame operation LED
B3 Lo-flame operation LED
B4 “Ignition transformer operation” LED
B5 “Fan motor overload tripped” LED
B6 Stand-by signalling lamp
O5 Oil valve EVG operation signalling lamp
O8 Oil valve EVS operation signalling lamp
A1 Burner Modulator (only on fully modulating burners)
A2 AZL..

PART III: MAINTENANCE

At least once a year carry out the maintenance operations listed below. In the case of seasonal servicing, it is recommended to carry out the maintenance at the end of each heating season; in the case of continuous operation the maintenance is carried out every 6 months.

WARNING: ALL OPERATIONS ON THE BURNER MUST BE CARRIED OUT WITH THE MAINS DISCONNECTED AND THE FUEL MANAUL CUTOFF VALVES CLOSED!

ATTENTION: READ CAREFULLY THE "WARNINGS" CHAPTER AT THE BEGINNIG OF THIS MANUAL.

ROUTINE MAINTENANCE

- Check and clean the cartdrige of the fuel filter, replace it if necessary;
- carefully check the fuel flexible hoses for leaks;
- check and clean the filter on the fuel pump: bilter must be thoroughly cleaned at least once in a season to ensure correct working of the fuel unit. To remove the filter, unscrew the four screws on the cover. When reassemble, make sure that the filter is mounted with the feet toward the pump body. If the gasket between cover and pump housing should be damaged, it must be replaced;
- remove, check and clean the combustion head;
- check the ignition electrodes and their ceramic insulators, clean, adjust and replace if necessary;
- remove and clean the oil nozzles (IMPORTANT: do not clean the nozzles using metallic or sharp utensils, use only solvents or steam); at the end of maintenance operations, refit the burner, turn it on and check the combustion. If in doubt, replace the defective nozzle/s. In case of intensive use of the burner, the nozzles must be replaced at the end of the working season;
- examine and clean the detection electrode/photoelement (according to the burner models), replace it if necessary*, in case of doubt, check the detection circuit, after the burner start-up;*
- clean and grease levers and rotating parts.

Maintenance of the pressure governor with filter (for ignitor gas train)

Before disassmbling the device, be sure that there is no pressurised gas inside it.

To check the filtering part (1) on threaded bodies (see picture Fig. 17):

- remove the bottom cover, unscrewing the fixing screws;
- remove the filtering part (1), clean it with water and soap, blow it with compressed air or replace it if necessary;
- reassemble the filtering part in its initial position checking that it is placed in its own slots (see picture Fig. 17);
- reassemble the bottom cover (3), being sure that the main bolt is centered in the bottom cover slot.

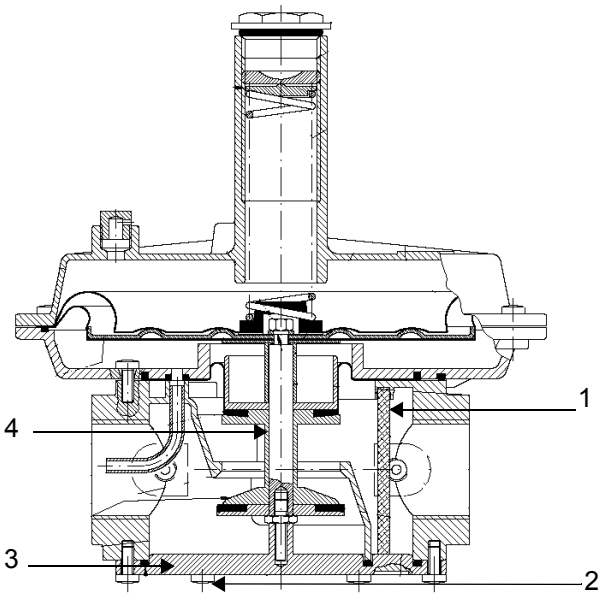

Fig. 17 - threaded body

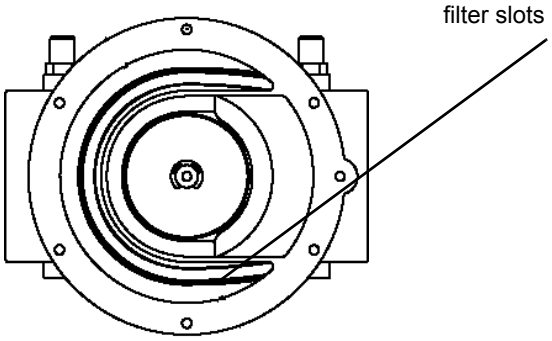

Fig. 18 - threaded body without bottom cover

Light oil filter maintenance

For correct and proper servicing, proceed as follows:

1 cutoff the required pipe section;

2 unscrew the filter cup;

3 remove the filtering cartridge, wash it with gasoline; if necessary, replace it; check the tightening O-rings and replace them if necessary;

4 replace the cup and restore the pipe line.

Removing the combustion head

1 Remove the top **H**.
2 Remove the **UV** detector out of its housing: disconnect electrode cables and the light oil flexible hoses.
3 Loosen the screws **V** holding the gas manifold **G**, loosen the two connectors **E** and remove the assembly as shown.

Note: to replace the combustion head, reverse the operations described above.

4 Clean the combustion head by means of a vacuum cleaner; scrape off the scale by means of a metallic brush.

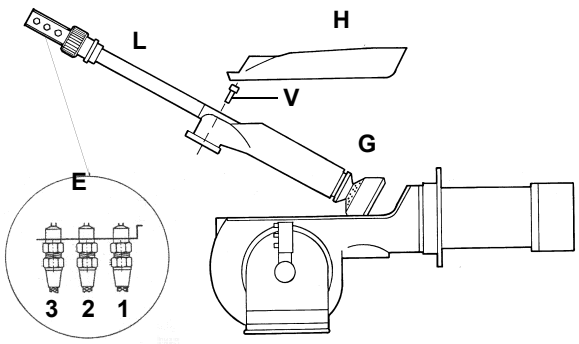

Key
1 Inlet
2 Return
3 Gun opening
E Oil piping connections
H Cover
L Oil gun

Removing the oil gun

1 remove the combustion head, as described on the previous paragraph;
2 slacken the screw VB
3 remove the gun with the nozzle holder
4 to rreassemble follow the procedure above in the reversed order.

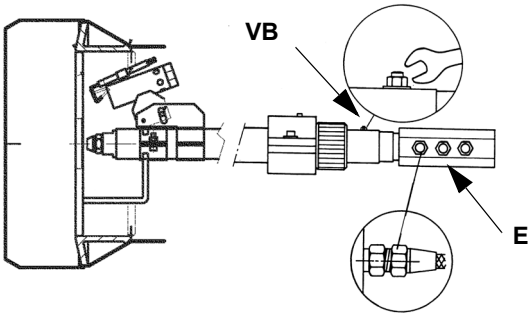

Fig. 19

Nozzle and electrode correct positions

To guarantee a good ignition the measures below must be respected; Place the nozzle according to the combustion head; unscrew the allen screw and set the combustion head position. Check the ignition electrode at the end of the procedure.

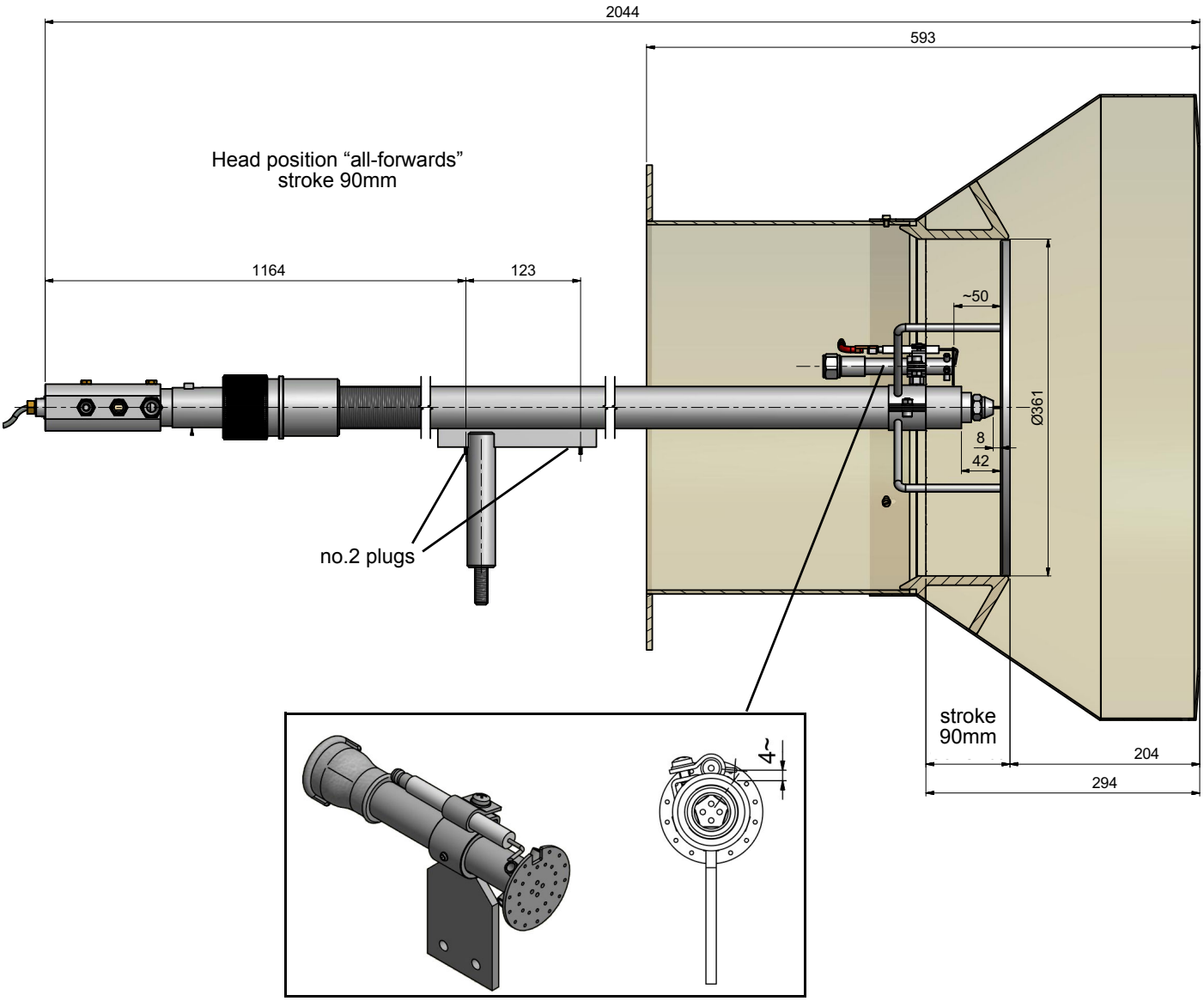

⚠	**ATTENTION:** avoid the ignition and detection electrodes to contact metallic parts (blast tube, head, etc.), otherwise the boiler’s operation would be compromised. Check the electrodes position after any intervention on the combustion head.

Replacing the ignition electrode

⚠	**ATTENTION:** avoid the ignition and detection electrodes to contact metallic parts (blast tube, head, etc.), otherwise the boiler’s operation would be compromised. Check the electrodes position after any intervention on the combustion head.

To replace the ignition electrode, proceed as follows:

- remove the burner cover
- disconnect the electrode cable
- remove the combustion head (see par. “Removing the combustion head”);
- loosen the screw that fastens the ignition electrode to the burner ignitor;
- remove the electrode and replace it referring to the measures shown on previous paragrah.

Cleaning and replacing the detection photoresistor

To clean/replace the detection photoresistor, proceed as follows:

1 Disconnect the system from the electrical power supply.
2 Shut off the fuel supply
3 remove the photoresistor from its slot ;
4 if necessary, replace the photocell with a new one;
5 replace the photoresistor into its slot.

Checking the detection current

To check the detection signal follow the scheme in the picture below. If the signal is less than the value indicated, check the position of the detection electrode or detector, the electrical contacts and, if necessary, replace the electrode or the detector.

Device	Flame detector	Minimum detection signal
Siemens LMV2x/3x	QRB4	Flame intensity (parameter 954) >16%

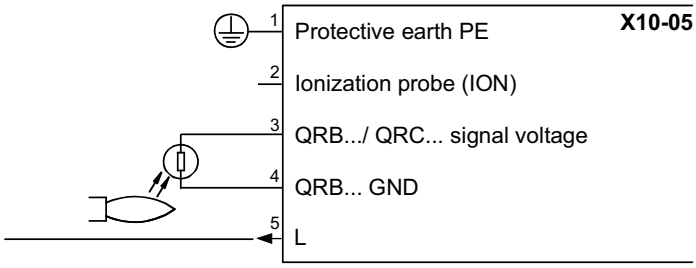

Seasonal stop

To stop the burner in the seasonal stop, proceed as follows:

1 turn the burner's main switch to 0 (Off position)
2 disconnect the power mains
3 close the fuel cock of the supply line

Burner disposal

In case of disposal, follow the instructions according to the laws in force in your country about the "Disposal of materials".

WIRING DIAGRAMS

Refer to the attached wiring diagrams.

WARNING

1 - Electrical supply 400V 50Hz 3N a.c.

2 - Do not reverse phase with neutral

3 - Ensure burner is properly earthed

TROUBLESHOOTNG GUIDE - Gas operation

BURNER DOESN'T LIGHT	* No electric power supply	* Wait until power supply is back
	* Main switch open	* Close the switch
	* Thermostats open	* Check set points and thermostat connections
	* Bad thermostat set point or broken thermostat	* Set or replace the thermostat
	* No gas pressure	* Restore gas pressure
	* Safety devices (manually operated safety thermostat or pressure switch and so on) open	* Restore safety devices; wait that boiler reaches its temperature then check safety device functionality.
	* Broken fuses	* Replace fuses. Check current absorption
	* Fan thermal contacts open (only three phases)	* Reset contacts and check current absorption
	* Burner control locked out	* Reset and check its functionality
	* Burner control damaged	* Replace burner control
GAS LEAKAGE: BURNER LOCKS OUT (NO FLAME)	* Gas flow too low	* Increase the gas flow * Check gas filter cleanness * Check butterfly valve opening when burner is starting (only Hi-Low flame and progressive)
	* Ignition electrodes discharge to ground because dirty or broken	* Clean or replace electrodes
	* Bad electrodes setting	* Check electrodes position referring to instruction manual
	* Electrical ignition cables damaged	* Replace cables
	* Bad position of cables in the ignition transformer or into the electrodes	* Improve the installation
	* Ignition transformer damaged	* Replace the transformer
BURNER LOCKS OUT WITH FLAME PRESENCE	* Bad flame detector set	
	* Flame detector damaged	* Replace or adjust flame detector
	* Bad cables of flame detector	* Check cables
	* Burner control damaged	* Replace burner control
	* Phase and neutral inverted	* Adjust connections
	* Ground missing or damaged	* Check ground continuity
	* Voltage on neutral	* Take off tension on neutral
	* Too small flame (due to not much gas)	* Adjust gas flow * Check gas filter cleanness
	* Too much combustion air	* Adjust air flow rate
BURNER CONTINUES TO PERFORM PRE-PURGE	* Burner control damaged	* Replace burner control
	* Air servomotor damaged	* Replace servomotor
BURNER CONTINUES TO PERFORM ALL ITS FEATURES WITHOUT IGNITING THE BURNER	* Air pressure switch damaged or bad links	* Check air pressure switch functions and links
	* Burner control damaged	* Replace burner control
BURNER LOCKS OUT WITHOUT ANY GAS FLOW	* Gas valves don't open	* Check voltage on valves; if necessary replace valve or the burner control * Check if the gas pressure is so high that the valve cannot open
	* Gas valves completely closed	* Open valves
	* Pressure governor too closed	* Adjust the pressure governor
	* Butterfly valve too closed	* Open the butterfly valve
	* Maximum pressure switch (if installed) open.	* Check connection and functionality
	* Air pressure switch doesn't close the NO contact	* Check connections * Check pressure switch functionality
BURNER LOCKS OUT AND THE CONTROL WINDOW SHOWS A P	* Air pressure switch damaged (it keeps the stand-by position or badly set	* Check air pressure switch functionality * Reset air pressure switch
	* Air pressure switch connections wrong	* Check connections
	* Air fan damaged	* Replace motor
	* No power supply	* Reset power supply
	* Air damper too closed	* Adjust air damper position
BURNER LOCKS OUT DURING NORMAL RUNNING	* Flame detector circuit interrupted	* Check wiring * Check photocell
	* Burner control damaged	* Replace burner control
	* Maximum gas pressure switch damaged or badly set	* Reset pressure switch or replace it
WHEN STARTING THE BURNER OPENS FOR A WHILE THE VALVES AND THEN REPEATS FROM THE BEGINNINGTHE CYCLE FROM PRE-PURGE	* Gas pressure switch badly set	* Reset the pressure switch
	* Gas filter dirty	* Clean gas filter
	* Gas governor too low or damaged	* Reset or replace the governor
BURNER STANDS WHILE RUNNING WITHOUT ANY SWITCHING OF THERMOSTATS	* Thermal contacts of fan motor open	* Reset contacts and check values * Check current absorption
FAN MOTOR DOESN'T START	* Internal motor wiring broken	* Replace wiring or complete motor
	* Fan motor starter broken	* Replace starter
	* Fuses broken (three phases only)	* Replace fuses and check current absorption
BURNER DOESN'T SWITCH TO HIGH FLAME	* Hi-low flame thermostat badly set or damaged	* Reset or replace thermostat
	* Servomotor cam badly set	* Reset servomotor cam
SOMETIMES THE SERVOMOTOR RUNS IN THE WRONG WAY	* Servomotor capacitor damaged	* Replace capacitor

TROUBLESHOOTNG GUIDE - Light oil operation

BURNER DOESN'T LIGHT	* No electric power supply	* Wait for electric power supply is back
	* Main switch open	* Close the switch
	* Thermostats open	* Check set points and thermostat connections
	* Bad thermostat set point or broken thermostat	* Set or replace the thermostat
	* No gas pressure	* Restore gas pressure
	* Safety devices (manually operated safety thermostat or pressure switch, and so on ...) open	* Restore safety devices; wait that boiler reaches its temperature then check safety device functionality.
	* Broken fuses	* Replace fuses. Check current absorption
	* Fan thermal contacts open (only three phases)	* Reset contacts and check current absorption
	* Burner control locked out	* Reset and check its functionality
	* Burner control damaged	* Replace burner control
BURNER LOCKS OUT WITH FLAME PRESENCE	* Flame detector dirty or damaged	* Clean or replace flame detector
	* Burner control damaged	* Replace burner control
	* Smoking flame	* Reset combustion air flow rate * Check the nozzle and, if necessary, replace it * Check cleanness of combustion head * Check chimney suction * Check boiler cleanness
	* Combustion head dirty	* Clean combustion head
BURNER LOCKS OUT WITHOUT ANY FUEL FLOW RATE	* No fuel	* Fill the tank
	* Pump joint broken	* Check pump pressure
	* Pump damaged	* Check pump suction
		* Replace pump
	* Compressed air (or steam) too high	* Released compressed air (or steam) pressure
	* Oil metering valve not open far enough	* Check air pressure
		* Check servomotor position
	* Oil valve not energized	* Check wiring path or replace valve
	* Fan motor not efficient	* Adjust or replace the motor
	* Fan or pump motor runs in the wrong way	* Change rotation
	* Obstructed nozzle	* Clean or replace the nozzle
	* Check valve in the tank locked or leaking	* Clean or replace the valve
	* Oil filter dirty * Pump filter dirty	* Clean filter
	* Solenoid valve dirty or broken	* Clean or replace solenoid valve
BURNER LOCKS OUT WITH FUEL FLOW RATE (NO FLAME)	* Oil pressure too low	* Reset oil pressure
	* Nozzle dirty or damaged	* Clean or replace nozzle
	* Water in the tank	* Take off all the water from the tank
		* Clean all filters
	* Suction too high	* Check suction before pump. If necessary clean filters.
	* Ignition electrodes grounded because dirty or damaged	* Clean or replace electrodes
	* Ignition electrodes badly set	* Check electrodes position referring to instruction manual
	* Cables damaged	* Replace cables
	* Bad position of cables in the ignition transformer or into the electrodes	* Improve the installation
	* Ignition transformer damaged	* Replace the transformer
PUMP TOO NOISY	* Suction too high (over 0,35 bar) (dirty filters, check valve in the tank locked, and so on ...)	* Clean filters * Replace check valve in the tank
	* Flexible hoses damaged	* Replace flexible hoses
	* Air infiltration in the pipes	* Take off all infiltration
	* Pipe too long or too narrow	* Increase line size
BURNER RUMBLES WHEN MODULA-TING TO HIGH FIRE	* Burner is too lean	* Adjust air-oil ratio
	* Drawer assembly not set properly	* Check drawer position
	* Oil may be too hot	* Check oil temperature
	* Flame is blowing off head	* Check head position
CARBON BUILD-UP ON THE FIRESIDES OF THE BOILER	* Oil flame not retaining to head	
	* Dirty nozzle	* Clean the nozzle
	* Oil spray impinging on burner head	* Check position of the nozzle respect to the head
	* Spray angle of the nozzle too wide	* Reduce spray angle
FLAME IRREGULAR OR SPARKING	* Oil pressure at nozzle too low	* Reset oil pressure
	* Air flow rate too high	* Adjust air flow rate
	* Oil is too cold	* Adjust oil temperature
	* Dirt in the oil	* Check filters
	* Water in the fuel	* Take off all the water
	* Oil impingement on the combustion head	* Drawer assembly far too rear * Nozzle is not protruding through centerhole of air diffuser * Oil flame not retaining to the head
	* Nozzle dirty or damaged	* Clean or, if necessary, replace the nozzle
BURNER LIGHTS BUT FLAME DOESN'T RETAIN TO BURNER HEAD	* Drawer assembly not positioned correctly	* Move forward or backward
	* Nozzle too far forward through centerhole of diffuser	* Move nozzle backward respect to diffuser
	* Oil or air pressure at nozzle is too low	* Increase oil or air pressure
	* Air louver too open	* Reduce air louver opening
	* Too much spread between oil and air (or steam) pressure	* Set the spread to a proper value
FLAME IRREGULAR OR SMOKING	* Not enough combustion air	* Adjust air flow rate
	* Nozzle dirty or damaged	* Clean or, if necessary, replace the nozzle
	* Flame is too big for furnace or nozzle spray angle is wrong	* Check burner-furnace coupling * Change nozzle with a suitable one
	* Nozzle spray angle wrong (flame too long or too wide)	* Replace nozzle
	* Boiler dirty	* Clean the boiler
	* Not enough suction at chimney	* Check chimney cleanness or size
	* Pressure at nozzle too low	* Reset oil pressure
	* Oil too cold	* Reset oil temperature
	* Combustion air inlet dirty	* Clean the air inlet
	* Flame is too small respect to furnace volume	* Replace nozzle or reset pump pressure
FUEL GAS TEMPERATURE TOO HIGH	* Boiler dirty	* Clean the boiler
	* Oil flow rate too high	* Adjust oil pressure or replace nozzle

C.I.B. UNIGAS S.p.A.
Via L.Galvani, 9 - 35011 Campodarsego (PD) - ITALY
Tel. +39 049 9200944 - Fax +39 049 9200945/9201269
web site: www.cibunigas.it - e-mail: cibunigas@cibunigas.it

Note: specifications and data subject to change. Errors and omissions excepted.

AZL2x - LMV2x/3x
Burner Management System

Service manual

M12916CD Rev. 3.4 03/2023

INDEX

MICROPROCESSOR CONTROLLED SYSTEM 6

User interface 6

Parameters level (heating engineer) 8

Setting menu 9

Block 000: Internal Parameter 10

Block 100: General information 10

Block 200: Burner control 13

Block 400: Setting air/fuel ratio curves 25

Block 500: Air/fuel ratio control 26

Block 600: Actuators 28

Block 700: Error history 31

Block 900: Process data 32

Actuators references 33

Gas proving system 33

Air-fuel curve points 33

COMMISSIONING THE BURNER 34

Warm setting 38

Cold setting 39

BURNER STARTUP WITH LMV2x ALREADY PROGRAMMED 40

Reset / manual lockout 42

Timeout for menu operation 42

Entering the Parameter levels 43

Info level 44

Service level 46

PHASES LIST 47

BACKUP PARAMETER WITH AZL2x 48

RESTORE PARAMETER FROM AZL2x TO LMV.. 49

WIRING DIAGRAM 65

Wiring connection for LMV20 65

Wiring variants for LMV27 66

Wiring variants for LMV26 67

Wiring variants for LMV37 68

DANGERS, WARNINGS AND NOTES OF CAUTION

THIS MANUAL IS SUPPLIED AS AN INTEGRAL AND ESSENTIAL PART OF THE PRODUCT AND MUST BE DELIVERED TO THE USER.

INFORMATION INCLUDED IN THIS SECTION ARE DEDICATED BOTH TO THE USER AND TO PERSONNEL FOLLOWING PRODUCT INSTALLATION AND MAINTENANCE.

THE USER WILL FIND FURTHER INFORMATION ABOUT OPERATING AND USE RESTRICTIONS, IN THE SECOND SECTION OF THIS MANUAL. WE HIGHLY RECOMMEND TO READ IT.

CAREFULLY KEEP THIS MANUAL FOR FUTURE REFERENCE.

1) GENERAL INTRODUCTION

- The equipment must be installed in compliance with the regulations in force, following the manufacturer's instructions, by qualified personnel.
- Qualified personnel means those having technical knowledge in the field of components for civil or industrial heating systems, sanitary hot water generation and particularly service centres authorised by the manufacturer.
- Improper installation may cause injury to people and animals, or damage to property, for which the manufacturer cannot be held liable.
- Remove all packaging material and inspect the equipment for integrity.

In case of any doubt, do not use the unit - contact the supplier.

The packaging materials (wooden crate, nails, fastening devices, plastic bags, foamed polystyrene, etc), should not be left within the reach of children, as they may prove harmful.

- Before any cleaning or servicing operation, disconnect the unit from the mains by turning the master switch OFF, and/or through the cut-out devices that are provided.
- Make sure that inlet or exhaust grilles are unobstructed.
- In case of breakdown and/or defective unit operation, disconnect the unit. Make no attempt to repair the unit or take any direct action.

Contact qualified personnel only.

Units shall be repaired exclusively by a servicing centre, duly authorised by the manufacturer, with original spare parts.

Failure to comply with the above instructions is likely to impair the unit's safety.

To ensure equipment efficiency and proper operation, it is essential that maintenance operations are performed by qualified personnel at regular intervals, following the manufacturer's instructions.

- When a decision is made to discontinue the use of the equipment, those parts likely to constitute sources of danger shall be made harmless.
- In case the equipment is to be sold or transferred to another user, or in case the original user should move and leave the unit behind, make sure that these instructions accompany the equipment at all times so that they can be consulted by the new owner and/or the installer.
- For all the units that have been modified or have options fitted then original accessory equipment only shall be used.
- This unit shall be employed exclusively for the use for which it is meant. Any other use shall be considered as improper and, therefore, dangerous.

The manufacturer shall not be held liable, by agreement or otherwise, for damages resulting from improper installation, use and failure to comply with the instructions supplied by the manufacturer.The occurrence of any of the following circustances may cause explosions, polluting unburnt gases (example: carbon monoxide CO), burns, serious harm to people, animals and things:

- Failure to comply with one of the WARNINGS in this chapter
- Incorrect handling, installation, adjustment or maintenance of the burner
- Incorrect use of the burner or incorrect use of its parts or optional supply

2) SPECIAL INSTRUCTIONS FOR BURNERS

- The burner should be installed in a suitable room, with ventilation openings complying with the requirements of the regulations in force, and sufficient for good combustion.
- Only burners designed according to the regulations in force should be used.
- This burner should be employed exclusively for the use for which it was designed.
- Before connecting the burner, make sure that the unit rating is the same as delivery mains (electricity, gas oil, or other fuel).
- Observe caution with hot burner components. These are, usually, near to the flame and the fuel pre-heating system, they become hot during the unit operation and will remain hot for some time after the burner has stopped.

When the decision is made to discontinue the use of the burner, the user shall have qualified personnel carry out the following operations:

a Remove the power supply by disconnecting the power cord from the mains.

b) Disconnect the fuel supply by means of the hand-operated shut-off valve and remove the control handwheels from their spindles.

Special warnings

- Make sure that the burner has, on installation, been firmly secured to the appliance, so that the flame is generated inside the appliance firebox.
- Before the burner is started and, thereafter, at least once a year, have qualified personnel perform the following operations:

a set the burner fuel flow rate depending on the heat input of the appliance;

b set the flow rate of the combustion-supporting air to obtain a combustion efficiency level at least equal to the lower level required by the regulations in force;

c check the unit operation for proper combustion, to avoid any harmful or polluting unburnt gases in excess of the limits permitted by the regulations in force;

d make sure that control and safety devices are operating properly;

e make sure that exhaust ducts intended to discharge the products of combustion are operating properly;

f on completion of setting and adjustment operations, make sure that all mechanical locking devices of controls have been duly tightened;

g make sure that a copy of the burner use and maintenance instructions is available in the boiler room.

- In case of a burner shut-down, reser the control box by means of the RESET pushbutton. If a second shut-down takes place, call the Technical Service, **without trying to RESET further**.
- The unit shall be operated and serviced by qualified personnel only, in compliance with the regulations in force.

3) GENERAL INSTRUCTIONS DEPENDING ON FUEL USED

3a) ELECTRICAL CONNECTION

- For safety reasons the unit must be efficiently earthed and installed as required by current safety regulations.
- It is vital that all saftey requirements are met. In case of any doubt, ask for an accurate inspection of electrics by qualified personnel, since the manufacturer cannot be held liable for damages that may be caused by failure to correctly earth the equipment.
- Qualified personnel must inspect the system to make sure that it is adequate to take the maximum power used by the equipment shown on the equipment rating plate. In particular, make sure that the system cable cross section is adequate for the power absorbed by the unit.
- No adaptors, multiple outlet sockets and/or extension cables are permitted to connect the unit to the electric mains.
- An omnipolar switch shall be provided for connection to mains, as required by the current safety regulations.
- The use of any power-operated component implies observance of a few basic rules, for example:
  - do not touch the unit with wet or damp parts of the body and/or with bare feet;
  - do not pull electric cables;

- do not leave the equipment exposed to weather (rain, sun, etc.) unless expressly required to do so;
- do not allow children or inexperienced persons to use equipment;

- The unit input cable shall not be replaced by the user.

In case of damage to the cable, switch off the unit and contact qualified personnel to replace.

When the unit is out of use for some time the electric switch supplying all the power-driven components in the system (i.e. pumps, burner, etc.) should be switched off.

3b) FIRING WITH GAS, LIGHT OIL OR OTHER FUELS

GENERAL

- The burner shall be installed by qualified personnel and in compliance with regulations and provisions in force; wrong installation can cause injuries to people and animals, or damage to property, for which the manufacturer cannot be held liable.
- Before installation, it is recommended that all the fuel supply system pipes be carefully cleaned inside, to remove foreign matter that might impair the burner operation.
- Before the burner is commissioned, qualified personnel should inspect the following:

a the fuel supply system, for proper sealing;

b the fuel flow rate, to make sure that it has been set based on the firing rate required of the burner;

c the burner firing system, to make sure that it is supplied for the designed fuel type;

d the fuel supply pressure, to make sure that it is included in the range shown on the rating plate;

e the fuel supply system, to make sure that the system dimensions are adequate to the burner firing rate, and that the system is equipped with all the safety and control devices required by the regulations in force.

- When the burner is to remain idle for some time, the fuel supply tap or taps should be closed.

SPECIAL INSTRUCTIONS FOR USING GAS

Have qualified personnel inspect the installation to ensure that:

a the gas delivery line and train are in compliance with the regulations and provisions in force;

b all gas connections are tight;

c the boiler room ventilation openings are such that they ensure the air supply flow required by the current regulations, and in any case are sufficient for proper combustion.

- Do not use gas pipes to earth electrical equipment.
- Never leave the burner connected when not in use. Always shut the gas valve off.
- In case of prolonged absence of the user, the main gas delivery valve to the burner should be shut off.

Precautions if you can smell gas

a do not operate electric switches, the telephone, or any other item likely to generate sparks;

b immediately open doors and windows to create an air flow to purge the room;

c close the gas valves;

d contact qualified personnel.

- Do not obstruct the ventilation openings of the room where gas appliances are installed, to avoid dangerous conditions such as the development of toxic or explosive mixtures.

DIRECTIVES AND STANDARDS

Gas burners

European directives:

- Directive 2009/142/EC - Gas Appliances;
- Directive 2006/95/EC on low voltage;
- Directive 2004/108/EC on electromagnetic compatibility

Harmonised standards :

-UNI EN 676 (Gas Burners;-EN 55014-1Electromagnetic compatibility - Requirements for household appliances, electric tools and similar apparatus.

-CEI EN 60335-1(Household and similar electrical appliances - Safety. Part 1: General requirements;

-EN 50165 (Electrical equipment of non-electric appliances for household and similar purposes. Safety requirements.

-EN 60335-2-102 (Household and similar electrical appliances. Safety. Particular requirements for gas, oil and solid-fuel burning appliances having electrical connections)

Light oil burners

European directives:

- Directive 2006/95/EC on low voltage;
- Directive 2004/108/EC on electromagnetic compatibility

Harmonised standards :

-CEI EN 60335-1(Household and similar electrical appliances - Safety. Part 1: General requirements;

-UNI 267 Automatic forced draught burners for liquid fuels

-EN 55014-1Electromagnetic compatibility - Requirements for household appliances, electric tools and similar apparatus.

-EN 50165 (Electrical equipment of non-electric appliances for household and similar purposes. Safety requirements.

National standards :

-UNI 7824: Monobloc nebulizer burners for liquid fuels. Characteristics and test methods

Heavy oil burners

European directives:

- Directive 2006/95/EC on low voltage;
- Directive 2004/108/EC on electromagnetic compatibility

Harmonised standards :

-CEI EN 60335-1 Household and similar electrical appliances - SafetyPart 1: General requirements;

-EN 55014-1Electromagnetic compatibility - Requirements for household appliances, electric tools and similar apparatus.

- EN 50165 Electrical equipment of non-electric appliances for household and similar purposes. Safety requirements.

National standards :

-UNI 7824: Monobloc nebulizer burners for liquid fuels. Characteristics and test methods

Gas - Light oil burners

European directives:

- Directive 2009/142/EC - Gas Appliances;
- Directive 2006/95/EC on low voltage;
- Directive 2004/108/EC on electromagnetic compatibility

Harmonised standards :

-UNI EN 676 Gas Burners

-EN 55014-1Electromagnetic compatibility - Requirements for household appliances, electric tools and similar apparatus.

-UNI 267 Automatic forced draught burners for liquid fuels

-CEI EN 60335-1(Household and similar electrical appliances - Safety. Part 1: General requirements;

- EN 50165 Electrical equipment of non-electric appliances for household and similar purposes. Safety requirements.

National standards :

-UNI 7824: Monobloc nebulizer burners for liquid fuels. Characteristics and test methods

Gas - Heavy oil burners

European directives:

- Directive 2009/142/EC - Gas Appliances;
- Directive 2006/95/EC on low voltage;
- Directive 2004/108/EC on electromagnetic compatibility

Harmonised standards :

-EN 55014-1Electromagnetic compatibility - Requirements for household appliances, electric tools and similar apparatus.

-UNI EN 676 (Gas Burners;

-CEI EN 60335-1(Household and similar electrical appliances - Safety. Part 1: General requirements;

- EN 50165 Electrical equipment of non-electric appliances for household and similar purposes. Safety requirements.

National standards :

-UNI 7824: Monobloc nebulizer burners for liquid fuels. Characteristics and test methods

Industrial burners

European directives:

- Directive 2009/142/EC - Gas Appliances;
- Directive 2006/95/EC on low voltage;
- Directive 2004/108/EC on electromagnetic compatibility

Harmonised standards :

-EN 55014-1Electromagnetic compatibility - Requirements for household appliances, electric tools and similar apparatus.

-EN 50165 Electrical equipment of non-electric appliances for household and similar purposes. Safety requirements.

-UNI EN 746-2: Industrial thermoprocessing equipment

Burner data plate

For the following information, please refer to the data plate:

- burner type and burner model: must be reported in any communication with the supplier
- burner ID (serial number): must be reported in any communication with the supplier
- date of production (year and month)
- information about fuel type and network pressure

Type	--
Model	--
Year	--
S.Number	--
Output	--
Oil Flow	--
Fuel	--
Category	--
Gas Pressure	--
Viscosity	--
El.Supply	--
El.Consump.	--
Fan Motor	--
Protection	--
Drwaing n°	--
P.I.N.	--

SYMBOLS USED

WARNING!	Failure to observe the warning may result in irreparable damage to the unit or damage to the environment
DANGER!	Failure to observe the warning may result in serious injuries or death.
WARNING!	Failure to observe the warning may result in electric shock with lethal consequences

MICROPROCESSOR CONTROLLED SYSTEM

The control system is made of the Siemens LMV central unit that performs all the burner control functions and of the Siemens AZL local programming unit that interfaces the system with the user.

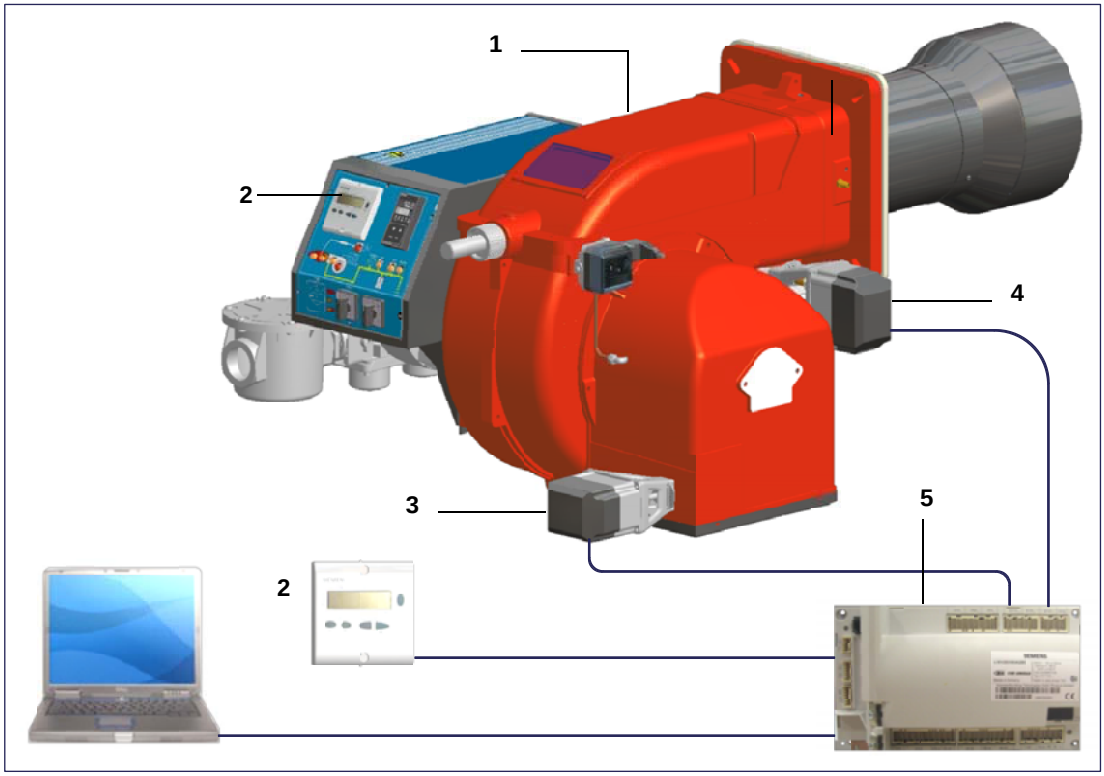

Keys

1 Burner
2 AZL2..
3 Air actuator
4 Fuel actuator
5 LMV2..

User interface

The AZL2x.. display/programming unit is shown below:

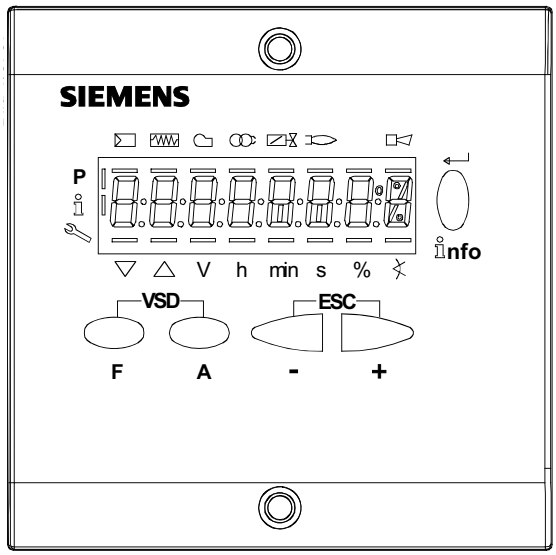

The keys functions are the following:

Key F
Used to adjust the “fuel” actuator position (**F**uel): :
While pressing the **F** key, the “fuel” actuator position can be changed by means of the **+** and **-** keys.

Key A
Used to adjust the “air” actuator position (**A**ir):
While pressing the **A** key, the “air” actuator position can be changed by means of the **+** and **-** keys.

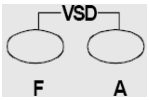

Key F + A
While pressing the two keys contemporarly, the **code** message will appear: by entering the proper password it is possible to access the **Service** mode.

Info and Enter keys
Used for **Info** and **Service** menues
Used as **Enter** key in the setting modes
Used as **Reset** key in the burner operation mode
Used to enter a lower level menu

-Key -
Used to decrease a a value
Used to enter Info and Serivce during the curve adjustments

+Key +
Used to increase a a value
Used to enter Info and Serivce during the curve adjustments

Keys (+ & -)= ESC
By pressing + and - at the same time, the ESCAPE function is perfomed:

to enter a lower level menu

The display will show these data:

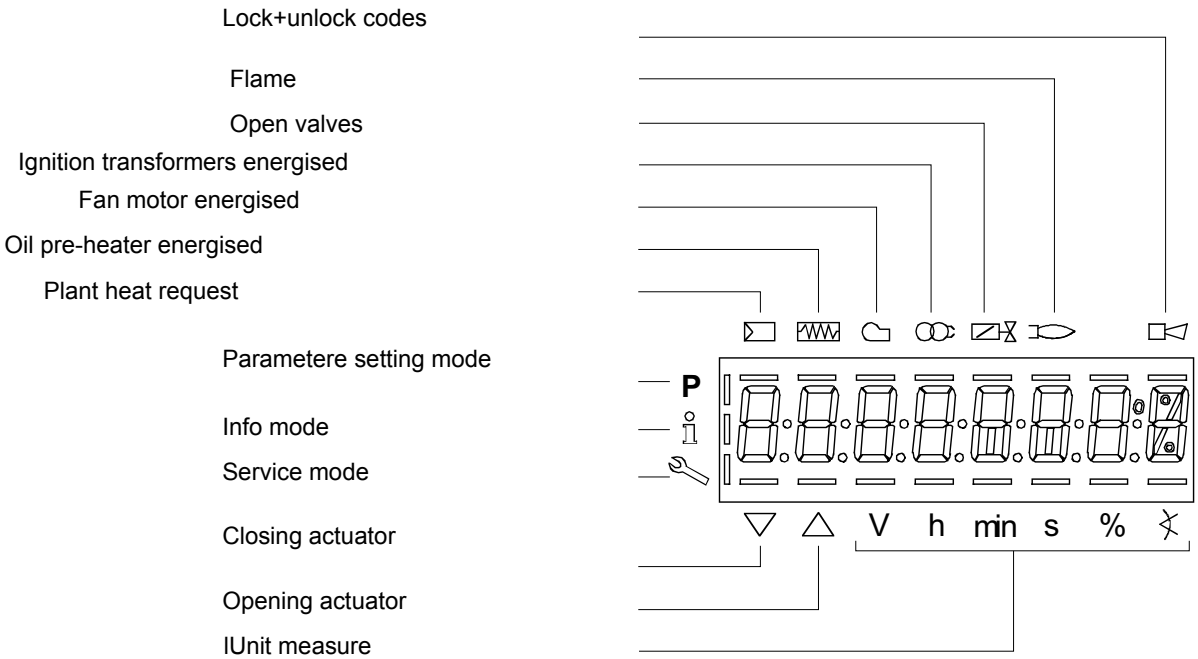

Parameters level (heating engineer)

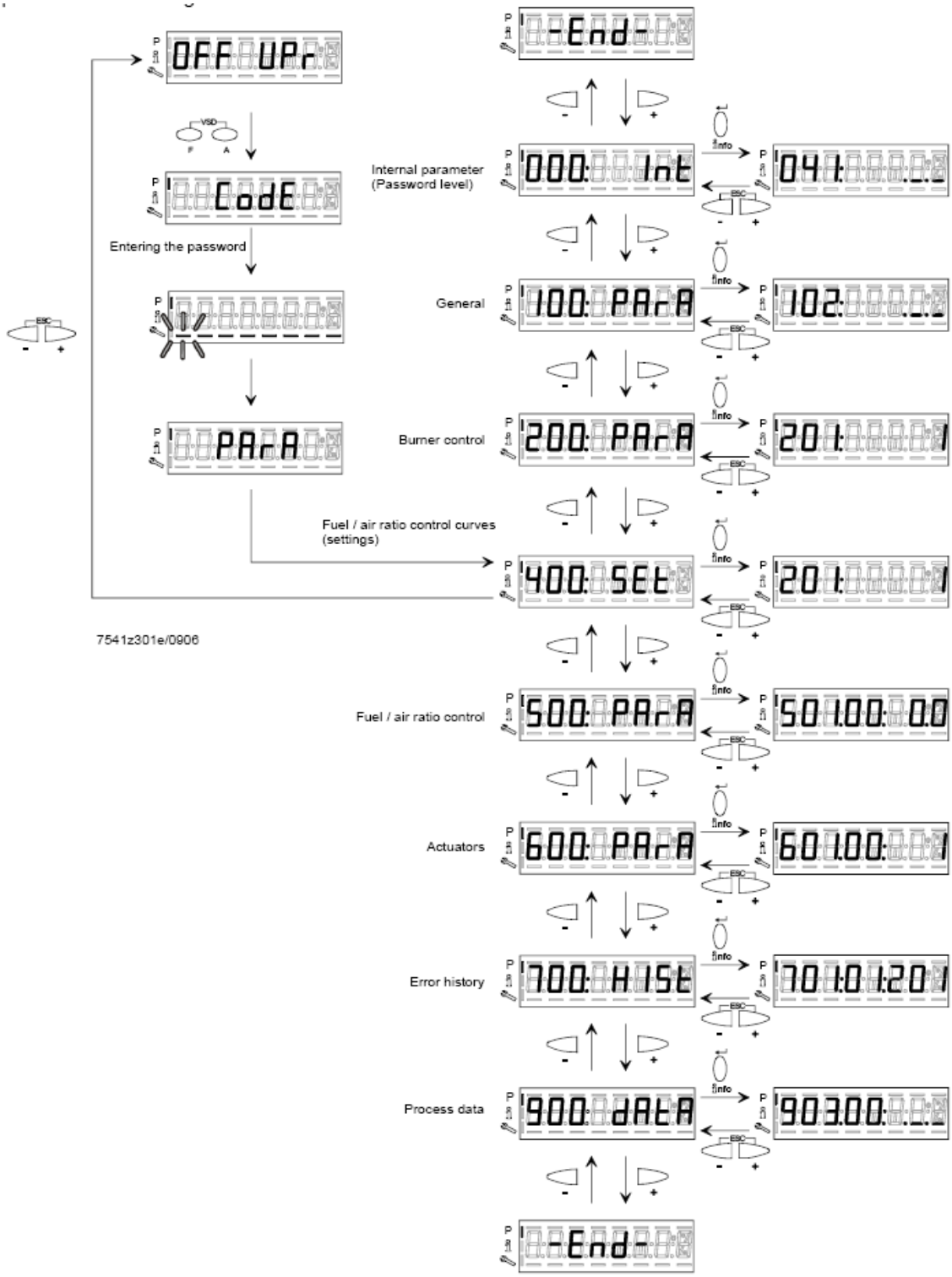

Setting menu

The seeting menu is divided into different blocks:

Bloc.	Descrizione	Description	Password
000		Internal parameters	OEM / Service
100	Informazioni generali	General	OEM / Service / Info
200	Controllo bruciatore	Burner control	OEM / Service
300	Controllo bruciatore (solo **LMV26**)	Burner control (**LMV26** only)	OEM / Service
400	Curve rapporto	Ratio curves	OEM / Service
500	Controllo rapporto	Ratio control	OEM / Service
600	Servocomandi	Actuators	OEM / Service
700	Storico errori	Error history	OEM / Service / Info
900	Dati di processo	Process data	OEM / Service / Info

The access to the various blocks is allowed by passwords. Passwords are divided into three levels:

- User level (info): no password needed
- Service level (Service)
- Manifacturer level (OEM)

Block 000: Internal Parameter

Param.	Descrizione	Description	Password
041	Password livello assistenza (ingegnere del calore)	Password heating engineer (4 characters)	OEM
042	Password livello OEM (costruttore del bruciatore)	Password OEM (5 characters)	OEM
050	Start backup/restore via AZL2x/PC	Start backup / restore via AZL2.../ PC software (set parameter to 1) Index 0: Create backup Index 1: Execute restore Error diagnostics via negative values (see error code 137)	SO
055	Identificazione bruciatore (backup dati)	Burner identification of AZL2... backup data set	SO
056		ASN extraction of AZL2... backup data set	SO
057	Versione software creata dal set dati backup	Software version when creating the AZL2... backup data set	Service / Info

Block 100: General information

Param.	Descrizione	Description	Password	LMV20 LMV27	LMV26	LMV37
102	Data produzione (in gg-mm-aa)	Identification date (yy-mm-dd)	Service / Info	x	x	x
103	Numero identificativ	Identification number	Service / Info	x	x	x
104	Set di parametri preimpostati: codice cliente	Preselected parameter set: customer code	Service / Info	x	x	x
105	Set di parametri preimpostati: versione	Preselected parameter set: version	Service / Info	x	x	x
107	Versione softwar	Software version	Service / Info	x	x	x
108	Variante software	Software variant	Service / Info	x	x	x
113	Identificativo bruciatore	Burner identification	Service / Info SO password for writing	x	x	x
121	Potenza manuale Valore “Undefined = automatico Impostare un valore inferiore a = in modo che il display mostri --- altrimenti, il controllore rimarrà sempre in stand-by e il display mostrerà la scritta OFF lampeggiante.	Manual output Undefined = automatic mode	Service / Info	x	x	x

125	Frequenza di rete 0 = 50 Hz 1 = 60 Hz	Mains frequency 0 = 50 Hz 1 = 60 Hz	Service / Info	x	x	x
126	Luminosità display	Display brightness	Service / Info	x	x	x
127	Tempo dopo il quale, se non viene premuto nessun tast il software esce dalla modalita programmazione (valore fabbrica = 60min - range impostazione: 10 - 120 min)	Timeout for menu operation (default value = 60min - range: 10 - 120 min)	OEM	x	x	x
130	Azzeramento Storico errori Impostare prima il parametro a 1 e poi a 2; se compare “0” = lo Storico è stato azzerato se compare “-1” = scaduto tempo sequ. 1_2	Delete display of error history To delete display : set to 1 then to 2; return value “0” = error history deleted return value “-1” = timeout of 1_2 sequence	OEM / Service	x	x	x
141	Attivazione comunicazione bus 0 = off 1 = Modbus 2 = riserva	Operating mode BACS 0 = off 1 = Modbus 2 = reserved	OEM / Service		x	x
142	Tempo d'arresto in caso di guasto di comunicazione	Setback time in the event of communication breakdown	OEM / Service		x	x
143	Riserva	Reserved	Service / Info		x	x
144	Riserva	Reserved	OEM / Service		x	x
145	Indirizzo dispositivo per Modbus	Device address for Modbus	OEM / Service		x	x
146	Velocità di trasmissione per Modbus	Baud rate for Modbus	OEM / Service		x	x
147	Parità per Modbus	Parity for Modbus	OEM / Service		x	x
148	on una interruzione della comunicazione bus: 0 ... 19.9 = bruciatore spento 20 ... 100 = 20 ... 100% potenza Per il funzionamento multistadio: 0 = bruciatore OFF, P1, P2, P3 non valido = nessun standard di prestazione della LMV.	Performance standard at interruption of communication with building automation For modulation operation the setting range is as fol-lows: 0…19.9 = burner off 20…100 = 20…100% burner rating For multistage operation apply to setting range: 0 = burner OFF, P1, P2, P3 Invalid = no performance standards of the building auto-mation	OEM / Service		x	x
161	Numero di avarie	Number of faults	Service / Info	x	x	x
162	Ore di esercizio (azzerabile da Service)	Operating hours (resettable by Service)	Service / Info	x	x	x
163	Ore di esercizio (con dispositivo sotto tensione)	Operating hours (when unit is live)	Service / Info	x	x	x
164	Numero di partenze (azzerabile da Service)	Number of startups (resettable by Service)	Service / Info	x	x	x
165	Numero di partenze	Number of startups	Service / Info	x	x	x

166	Numero totale di partenze (non azzerabile)	Total number of startups	Service / Info	x	x	x
167	Volume combustibile (azzerabile da OEM)	Fuel volume (resettable by OEM)	Service / Info	x	x	x
172	Fuel 1(secondo combustibile)Ore di esercizio (azzerabile da Service)	Fuel 1: Operation hours resettable	Service / Info		x	
174	Fuel 1 (secondo combustibile) Numero di partenze (azzerabile da Service)	Fuel 1: Number of startups resettable	Service / Info		x	
175	Fuel 1 (secondo combustibile) Numero di partenze	Fuel 1: Number of startups	Service / Info		x	
177	Fuel 1 (secondo combustibile) Volume combustibile (azzerabile da OEM)	Fuel 1: Fuel volume resettable (m^3, l, ft^3, gal)	Service / Info		x	

Param.	Descrizione	Description	Password	LMV20 LMV27	LMV26	LMV37
201	Modalità funzionamento bruciatore (rampa combustibile, modulante / multistadio, servo-comandi, ecc.) __= non definito (cancellazione curve) **1** = accensione diretta a gas (G mod) **2** = accensione tramite pilota gas con attacco tra le due elettrovalvole EV1/EV2 del gas (Gp1 mod) **3** = accensione tramite pilota gas con attacco a monte dell'elettrovalvola EV1 del gas (Gp2 mod) **4** = accensione a gasolio - modulante (Lo mod) **5** = accensione a gasolio - bistadio (Lo 2 stage) **6** = accensione a gasolio - tristadio (Lo 3 stage) **7** = accensione diretta a gas - regolazione pneumatica (G mod pneu) **8** = accensione tramite pilota gas con attacco tra le due elettrovalvole EV1/EV2 del gas - regolazione pneumatica (Gp1 mod pneu) **9** = accensione tramite pilota gas con attacco a monte dell'elettrovalvola EV1 del gas - regolazione pneumatica (Gp2 mod pneu)	Burner operating mode (fuel train, modulating / multistage, actuators, etc..) __= undefined (delete curves) **1** = gas direct ignition (G mod) **2** = ignition by gas pilot connected between the two gas solenoid valves EV1/EV2 (Gp1 mod) **3** = ignition by gas pilot connected upstream the gas EV1 (Gp2 mod) **4** = light oil ignition - modulating (Lo mod) **5** = light oil ignition - double stage (Lo 2 stage) **6** = light oil ignition - three stage (Lo 3 stage) **7** = gas direct ignition - pneumatic regulation (G mod pneu) **8** = ignition by gas pilot connected between the two gas solenoid valves EV1/EV2 - pneumatic regulation (Gp1 mod pneu) **9** = ignition by gas pilot connected upstream the gas EV1 - pneumatic regulation (Gp2 mod pneu)	OEM / Service	x	x	x
	10 = olio modulante con accensione tramite pilota (LOGp mod) **11** = olio 2 stadi con accensione tramite pilota (LOGp 2-stage) **12** = olio modulante con 2 valvole combustibile (LOmod 2 valvole) **13** = olio modulante con 2 valvole combustibile e con accensione tramite pilota (LOGp 2 valvole) **14** = gas modulante pneumatico senza servomotori (Gmod pneu)	**10** = LoGp mod **11** = LoGp 2-stage **12** = Lo mod 2 fuel valves **13** = LoGp mod 2 fuel valves **14** = G mod pneu without actuator				

	15 = gas rampa Gp1 modulante pneumatico senza servomotori (Gp1 mod pneu) **16** = gas rampa Gp2 modulante pneumatico senza servomotori (Gp2 mod pneu) **17** = olio LO 2 stadi senza servomotori **18** = olio LO 3 stadi senza servomotori **19** = gas Gmod con solo servomotore gas **20** = gas Gp1 mod con solo servomotore gas **21** = gas Gp2 mod con solo servomotore gas **22** = olio LO mod con solo servomotore olio	**15** = Gp1 mod pneu without actuator **16** = Gp2 mod pneu without actuator **17** = Lo 2-stage without actuator **18** = Lo 3-stage without actuator **19** = G mod gas actuator only **20** = Gp1 mod gas actuator only **21** = Gp2 mod gas actuator only **22** = Lo mod oil actuator only				
208	Stop programma **0** = non attivo **1** = posizione preventilazione (Ph24 - fase 24 del programma) **2** = posizione accensione (Ph36 - fase 36 del programma) **3** = intervallo di tempo 1 (Ph44 - fase 44 del programma) **4** = intervallo di tempo 2 (Ph52 - fase 52 del programma)	Program stop **0** = deactivated **1** = pre-purge position (Ph24 - program phase 24) **2** = ignition position (Ph36 - program phase 36) **3** = interval 1 (Ph44 - program phase 44) **4** = interval 2 (Ph52 - program phase 52)	OEM / Service	x	x	x
210	Allarme impedimento avviamento **0** = non attivo **1** = attivo	Alarm in the event of start prevention **0** = deactivated **1** = activated	OEM / Service	x	x	x
211	Tempo aumento giri ventilatore (valore fabbrica = 2s - range impostazione: 2 - 60 s)	Fan ramp up time (default value = 2s - range: 2 - 60 s)	OEM / Service	x	x	x
212	Tempo massimo raggiungimento bassa fiamma (valore fabbrica = 45 s - range impostazione: 0.2 s - 10 min) Stabilisce il massimo intervallo di tempo durante il quale il bruciatore raggiunge la minima potenza e poi si spegne	Maximum time down to low-fire (default value = 45 s - range: 0.2 s - 10 min) It states the maximum time interval during which the burner drives to the low output and then turns off	OEM / Service		x	
213	Tempo minimo raggiungimento posizione di stand by (valore fabbrica = 2 s - range impostazione: 2 - 60 s)	Min. time home run (default value = 2 s - range: 2 - 60 s)	OEM	x	x	x
214	Tempo massimo inizio partenza	Max. time start release	OEM	x	x	x
215	Limite ripetizioni catena di sicurezza (valore fabbrica = 16 - range impostazione:1 - 16)	Repetition limit safety loop (default value = 16 - range: 1 - 16)	OEM / Service	x	x	x
217	Tempo massimo per rilevazione segnale (valore fabbrica = 30s - range impostazione: 5s - 10 min)	Max. time to detector signal (default value = 30s - range: 5s - 10 min)	OEM	x	x	x

221	Gas: sonda rilevazione fiamma attivo (valore fabbrica = 1)	Gas: active detector flame evaluation (default value = 1) **0** = QRB../QRC.. **1** = ION / QRA..	OEM / Service	x	x	x
222	Gas: Preventilazione (valore fabbrica = 1) **1** = attivo **0** = non attivo ATTENZIONE : In ambito civile la norma EN676 rende obbligatoria la preventilazione. In ambito industriale, vedere i casi in cui la norma EN746-2 prevede la possibilità di non fare la preventilazione. In questi ultimi casi il bruciatore deve essere costruito obbligatoriamente con controllo di tenuta e valvole gas in classe A	Gas: Pre-purging (default value = 1) **1** = active **0** = deactivated WARNING: in the civil field, the prepurge is mandatory according to the standard EN676. In the industrial fiels, check if the pre purge can be avoided according to the stanrds EN746-2 If the prepurge is not performed, the burner must be equipped with two valves and the proving system.	OEM / Service	x	x	x
223	Limite ripetizioni pressostato gas di minima pressione (valore fabbrica = 16 - range impostazione:1 - 16)	Repetition limit pressure switch-min-gas (default value = 16 - range:1 - 16)	OEM / Service	x	x	x
225	Gas: tempo di preventilazione (valore fabbrica = 20s - range impostazione:20s - 60min)	Gas: Prepurge time (default value = 20s - range:20s - 60min)	OEM / Service	x	x	x
226	Gas: tempo di preaccensione (valore fabbrica = 2s - range impostazione:0.2s - 60min)	Gas: Preignition time (default value = 2s - range: 0.2s - 60min)	OEM / Service	x	x	x
227	Gas: tempo di sicurezza 1 (TSA1) (valore fabbrica = 3s - range impostazione:0.2 - 10s)	Gas: Safety time 1 (TSA1) (default value = 3s - range: 0.2 - 10s)	OEM	x	x	x
229	Gas: tempo di risposta a cadute di pressione entro TSA1 e TSA2 (valore fabbrica = 1.8s - range impostazione:0.2s - 9.8s)	Gas: time to respond to pressure faults in TSA1 e TSA2 (default value = 1.8s - range: 0.2s - 9.8s)	OEM	x	x	x
230	Gas: Intervallo 1 (valore fabbrica = 2s - range impostazione:0.2s - 60min)	Gas: Interval 1 (default value = 2s - range: 0.2s - 60min)	OEM / Service	x	x	x
231	Gas: tempo di sicurezza 2 (TSA2) (valore fabbrica = 3s - range impostazione:0.2 - 10s)	Gas: Safety time 2 (TSA2) (default value = 3s - range:0.2 - 10s)	OEM	x	x	x
232	Gas: Intervallo 2 (valore fabbrica = 2s - range impostazione:0.2s - 60min)	Gas: Interval 2 (default value = 2s - range:0.2s - 60min)	OEM / Service	x	x	
233	Gas: Tempo postcombustione (valore fabbrica = 8s - range impostazione:0.2s - 60s)	Gas: postcombustion time (default value = 8s - range:0.2s - 60s)	OEM / Service	x	x	x
234	Gas: Tempo postventilazione (valore fabbrica = 0.2s - range impostazione:0.2s - 180min)	Gas: Postpurge time (default value = 0.2s - range:0.2s - 180min)	OEM / Service	x	x	x

236	Gas: Pressostato gas di minima (default = 1) 0 = inattivo 1 = pressostato gas di minima (a monte valvola V1) 2 = controllo perditavalvole via pressostato (montato tra le valvole V1 e V2)	Gas: Pressure switch-min input 0 = inactive 1 = pressure switch-min (upstream of fuel valve 1 (V1)) 2 = valve proving via pressure switch-min (between fuel valves 1 (V1) and 2 (V2))	OEM / Service	x	x	
237	Gas: Pressostato gas di massima / ingresso-POC 0 = inattivo 1= pressostato gas di massima 2= POC 3 = pressostato controllo perdite	Gas: Pressure switch-max / POC input 0 = inactive 1 = pressure switch-max 2 = POC 3 = pressure switch valve proving			x	x
239	Gas: Forzatura al funzionamento intermittente 0 = disattivato 1 = attivato Attenzione : di default questo parametro è attivo = (1); esso è modificabile solo su LMV37. Dal punto di vista della sicurezza, il funzionamento continuo è valido esclusivamente per bruciatori di gas con elettrodo di rilevazione.	Gas: Forced intermittent operation 0 = deactivated 1 = activated	OEM			x
240	Limite ripetizioni perdita di fiamma (valore fabbrica = 2 - range impostazione:1 - 2)	Repetition limit loss of flame (default value= 2 - range:1 - 2)	OEM	x	x	x
241	Gas: esecuzione controllo tenuta (valore fabbrica = 2) **0** = no controllo tenuta **1** = controllo tenuta in avviamento **2** = controllo tenuta in arresto **3** = controllo tenuta in arresto e in avviamento	Gas: execution proving test (default value= 2) **0** = no proving test **1** = proving test on startup **2** = proving test on shutdown **3** = proving test on shutdown and on startup	OEM / Service	x	x	x
242	Gas: tempo evacuazione controllo tenuta (valore fabbrica = 3s - range impostazione:0.2s - 10s)	Gas: proving test evacuation time (default value = 3s - range:0.2s - 10s)	OEM	x	x	x

243	Gas: tempo pressione atmosferica controllo tenuta (valore fabbrica = 10s - range impostazione:0.2s - 60s)	Gas: proving test time atmospheric pressure (default value = 10s - range:0.2s - 60s)	OEM	x	x	x
244	Gas: tempo riempimento controllo tenuta (valore fabbrica = 3s - range impostazione:0.2s - 10s)	Gas: proving test filling time (default value = 3s - range:0.2s - 10s)	OEM	x	x	x
245	Gas: tempo test pressione gas (valore fabbrica = 10s - range impostazione:0.2s - 60s)	Gas: proving test time gas pressure (default value = 10s - range:0.2s - 60s)	OEM	x	x	x
246	Gas: tempo attesa consenso pressostato di minima (valore fabbrica = 10s - range impostazione:0.2s - 60s) Se la pressione del gas è troppo bassa, in fase 22 non verrà eseguito l'avviamento: il sistema compie un numero impostabile di tentativi finché non si arriva al blocco. Il tempo di attesa tra un tentativo e il successivo viene raddoppiato ad ogni tentativo.	Gas: waiting time gas shortage (default value = 10s - range:0.2s - 60s) If the gas pressure is too low, in phase 22 the startup will not be performed: the system tries for a certain number of times the it locks out. The time interval between two attempts is doubled at each attempt.	OEM	x	x	x
248	Gas: Tempo di post-ventilazione 3 (abortito con regolatore di potenza (LR)-ON	Gas: Postpurge time 3 (abortion with load controller (LR)-ON	OEM / Service	x	x	x
261	Olio: sonda rilevazione fiamma attivo (valore fabbrica = 0) **0** = QRB../QRC.. **1** = ION / QRA..	Oil: active detector flame evaluation (default value = 0) **0** = QRB../QRC.. **1** = ION / QRA..	OEM / Service	x	x	x
262	Olio: preventilazione (valore fabbrica = 1) **1** = attivo **0** = non attivo In ambito civile la norma EN267 rende obbligatoria la preventilazione. In ambito industriale, vedere i casi in cui la norma EN746-2 prevede la possibilità di non fare la preventilazione.	Oil: prepurging (default value = 1) **0** = deactivated **1** = activated **0** = deactivated WARNING: in the civil field, the prepurge is mandatory according to the standard EN267. In the industrial fiels, check if the pre purge can be avoided according to the standard EN746-2	OEM / Service	x	x	x
265	Olio: tempo preventilazione (valore fabbrica = 15s - range impostazione:15s - 60min)	Oil: prepurging time (default value = 15s - range:15s - 60min)	OEM / Service	x	x	x
266	Olio: tempo preaccensione (valore fabbrica = 2s - range impostazione:0.2s - 60min)	Oil: preignition time (default value = 2s - range:0.2s - 60min)	OEM / Service	x	x	x
267	Olio: tempo di sicurezza 1 (TSA1) (valore fabbrica = 5s - range impostazione:0.2 - 15s)	Oil: safety time 1 (TSA1) (default value = 5s - range:0.2 - 15s)	OEM	x	x	x
269	Olio: tempo di risposta a cadute di pressione entro TSA1 e TSA2 (valore fabbrica = 1.8s - range impostazione:0.2s - 14.8s)	Oil: time to respond to pressure faults in TSA1 and TSA2 (default value = 1.8s - range:0.2s - 14.8s)	OEM	x	x	x

270	Olio: Intervallo 1 (valore fabbrica = 2s - range impostazione:0.2s - 60min)	Oil: Interval 1 (default value = 2s - range:0.2s - 60min)	OEM / Service	x	x	x
271	Olio: tempo di sicurezza 2 (TSA2) (valore fabbrica = 3s - range impostazione:0.2 - 10s)	Oil: safety time 2 (TSA2) (default value = 3s - range:0.2 - 10s)	OEM	x	x	x
272	Olio: Intervallo 2 (valore fabbrica = 2s - range impostazione:0.2s - 60min)	Oil: Interval 2 (default value = 2s - range:0.2s - 60min)	OEM / Service	x	x	x
273	Olio: Tempo postcombustione (valore fabbrica = 8s - range impostazione:0.2s - 60s)	Oil: Postcombustion time (default value = 8s - range:0.2s - 60s)	OEM / Service	x	x	x
274	Olio: Tempo postventilazione (valore fabbrica = 0.2s - range impostazione:0.2s - 180min)	Oil: Postpurging time (default value = 0.2s - range:0.2s - 180min)	OEM / Service	x	x	x
276	Olio : Pressostato olio di minima (default = 1) 0 = inattivo 1 = attivo dalla fase 38 2 = attivo dal tempo di sicurezza (TSA)	Oil. Pressure switch-min input 0 = inactive 1 = active from phase 38 2 = active from safety time (TSA)	OEM / Service	x	x	
277	Olio: Pressostato olio di massima / ingresso-POC 0 = inattivo 1= pressostato olio di massima 2= POC	Oil: Pressure switch-max/POC input 0 = inactive 1 = pressure switch-max 2 = POC			x	
279	Olio: Forzatura al funzionamento intermittente 0 = disattivato 1 = attivato Attenzione : di default questo parametro è attivo = (1); esso è modificabile solo su LMV37..	Oil: Forced intermittent operation 0 = deactivated 1 = activated	OEM		x	x
280	Limite ripetizioni perdita di fiamma (valore fabbrica = 2 - range impostazione:1 - 2)	Repetition limit value loss of flame (default value = 2 - range:1 - 2)	OEM	x	x	x
281	Olio: tempo iniezione olio (valore fabbr. = 1) **0** = preaccensione corta (Ph38 - fase programma 38) **1** = preaccensione lunga (con ventilatore) (Ph22 - fase programma 22)	Oil: time oil ignition (default value = 1) **0** = short preignition (Ph38-progr. phase 38) **1** = long preignition (with fan) (Ph22 - program phase 22)	OEM / Service	x	x	x
284	Olio: Tempo di post-ventilazione 3 (abortito con regolatore di potenza (LR)-ON	Oil: Postpurge time 3 (abortion with load controller (LR)-ON	OEM / Service	x	x	x

Block 300: Burner control (only with LMV26)

Param.	Descrizione	Description	Password	LMV20 LMV27	LMV26	LMV37
301	Combustibile 1 : Modalità funzionamento bruciatore (rampa combustibile, modulante / multistadio, servocomandi, ecc.) __= non definito (cancellazione curve) **1** = accensione diretta a gas (G mod) **2** = accensione tramite pilota gas con attacco tra le due elettrovalvole EV1/EV2 del gas (Gp1 mod) **3** = accensione tramite pilota gas con attacco a monte dell'elettrovalvola EV1 del gas (Gp2 mod) **4** = accensione a gasolio - modulante (Lo mod) **5** = accensione a gasolio - bistadio (Lo 2 stage) **6** = accensione a gasolio - tristadio (Lo 3 stage) **7** = accensione diretta a gas - regolazione pneumatica (G mod pneu) **8** = accensione tramite pilota gas con attacco tra le due elettrovalvole EV1/EV2 del gas - regolazione pneumatica (Gp1 mod pneu) **9** = accensione tramite pilota gas con attacco a monte dell'elettrovalvola EV1 del gas - regolazione pneumatica (Gp2 mod pneu) **10** = olio modulante con accensione tramite pilota (LOGp mod)	Fuel 1 : Burner operating mode (fuel train, modulating / multistage, actuators, etc..) __= undefined (delete curves) **1** = gas direct ignition (G mod) **2** = ignition by gas pilot connected between the two gas solenoid valves EV1/EV2 (Gp1 mod) **3** = ignition by gas pilot connected upstream the gas EV1 (Gp2 mod) **4** = light oil ignition - modulating (Lo mod) **5** = light oil ignition - double stage (Lo 2 stage) **6** = light oil ignition - three stage (Lo 3 stage) **7** = gas direct ignition - pneumatic regulation (G mod pneu) **8** = ignition by gas pilot connected between the two gas solenoid valves EV1/EV2 - pneumatic regulation (Gp1 mod pneu) **9** = ignition by gas pilot connected upstream the gas EV1 - pneumatic regulation (Gp2 mod pneu) **10** = LoGp mod	OEM / Service		x	

	11 = olio 2 stadi con accensione tramite pilota (LOGp 2-stage) **12** = olio modulante con 2 valvole combustibile (LOmod 2 valvole) **13** = olio modulante con 2 valvole combustibile e con accensione tramite pilota (LOGp 2 valvole) **14** = gas modulante pneumatico senza servomotori (Gmod pneu) **15** = gas rampa Gp1 modulante pneumatico senza servomotori (Gp1 mod pneu) **16** = gas rampa Gp2 modulante pneumatico senza servomotori (Gp2 mod pneu)	**11** = LoGp 2-stage **12** = Lo mod 2 fuel valves **13** = LoGp mod 2 fuel valves **14** = G mod pneu without actuator **15** = Gp1 mod pneu without actuator **16** = Gp2 mod pneu without actuator				
	17 = olio LO 2 stadi senza servomotori **18** = olio LO 3 stadi senza servomotori **19** = gas Gmod con solo servomotore gas **20** = gas Gp1 mod con solo servomotore gas **21** = gas Gp2 mod con solo servomotore gas **22** = olio LO mod con solo servomotore olio	**17** = Lo 2-stage without actuator **18** = Lo 3-stage without actuator **19** = G mod gas actuator only **20** = Gp1 mod gas actuator only **21** = Gp2 mod gas actuator only **22** = Lo mod oil actuator only			x	
321	Combustibile 1 - Gas: sonda rilevazione fiamma attivo (valore fabbrica = 1) - **0** = QRB../QRC.. **1** = ION / QRA..	Fuel 1 - Gas: active detector flame evaluation (default value = 1) **0** = QRB../QRC.. **1** = ION / QRA..	OEM / Service		x	
322	Combustibile 1 - Gas: Preventilazione (valore fabbrica = 1) **1** = attivo **0** = non attivo ATTENZIONE : In ambito civile la norma EN676 rende obbligatoria la preventilazione. In ambito industriale, vedere i casi in cui la norma EN746-2 prevede la possibilità di non fare la preventilazione. In questi ultimi casi il bruciatore deve essere costruito obbligatoriamente con controllo di tenuta e valvole gas in classe A.	Fuel 1 - Gas: Pre-purging (default value = 1) **1** = active **0** = deactivated WARNING: in the civil field, the prepurge is mandatory according to the standard EN676. In the industrial fiels, check if the pre purge can be avoided according to the stanrds EN746-2 If the prepurge is not performed, the burner must be equipped with two valves and the proving system.	OEM / Service		x	
323	Limite ripetizioni pressostato gas di minima pressione (valore fabbrica = 16 - range impostazione:1 - 16)	Repetition limit pressure switch-min-gas (default value = 16 - range:1 - 16)	OEM / Service		x	
325	Combustibile 1 - Gas: tempo di preventilazione (valore fabbrica = 20s - range impostazione:20s - 60min)	Fuel 1 - Gas: Prepurge time (default value = 20s - range:20s - 60min)	OEM / Service		x	

326	Combustibile 1 - Gas: tempo di preaccensione (valore fabbrica = 2s - range impostazione:0.2s - 60min)	Fuel 1 - Gas: Preignition time (default value = 2s - range: 0.2s - 60min)	OEM / Service		x	
327	Combustibile 1 - Gas: tempo di sicurezza 1 (TSA1) (valore fabbrica = 3s - range impostazione:0.2 - 10s)	Fuel 1 - Gas: Safety time 1 (TSA1) (default value = 3s - range: 0.2 - 10s)	OEM		x	
329	Combustibile 1 - Gas: tempo di risposta a cadute di pressione entro TSA1 e TSA2 (valore fabbrica = 1.8s - range impostazione:0.2s - 9.8s)	Fuel 1 - Gas: time to respond to pressure faults in TSA1 e TSA2 (default value = 1.8s - range: 0.2s - 9.8s)	OEM		x	
330	Combustibile 1 - Gas: Intervallo 1 (valore fabbrica = 2s - range impostazione:0.2s - 60min)	Fuel 1 - Gas: Interval 1 (default value = 2s - range: 0.2s - 60min)	OEM / Service		x	
331	Combustibile 1 - Gas: tempo di sicurezza 2 (TSA2) (valore fabbrica = 3s - range impostazione:0.2 - 10s)	Fuel 1 - Gas: Safety time 2 (TSA2) (default value = 3s - range:0.2 - 10s)	OEM		x	
332	Combustibile 1 - Gas: Intervallo 2 (valore fabbrica = 2s - range impostazione:0.2s - 60min)	Fuel 1 - Gas: Interval 2 (default value = 2s - range:0.2s - 60min)	OEM / Service		x	
333	Combustibile 1 - Gas: Tempo postcombustione (valore fabbrica = 8s - range impostazione:0.2s - 60s)	Fuel 1 - Gas: postcombustion time (default value = 8s - range:0.2s - 60s)	OEM / Service		x	
334	Combustibile 1 - Gas: Tempo postventilazione (valore fabbrica = 0.2s - range impostazione:0.2s - 180min)	Fuel 1 - Gas: Postpurge time (default value = 0.2s - range:0.2s - 180min)	OEM / Service		x	
336	Combustibile 1 - Gas: Pressostato gas di minima (default = 1) 0 = inattivo 1 = pressostato gas di minima (a monte valvola V1) 2 = controllo perditavalvole via pressostato (montato tra le valvole V1 e V2)	Fuel 1 - Gas: Pressure switch-min input 0 = inactive 1 = pressure switch-min (upstream of fuel valve 1 (V1)) 2 = valve proving via pressure switch-min (between fuel valves 1 (V1) and 2 (V2))	OEM / Service		x	
337	Combustibile 1 - Gas: Pressostato gas di massima / ingressoPOC 0 = inattivo 1= pressostato gas di massima 2= POC 3 = pressostato controllo perdite	Fuel 1 - Gas: Pressure switch-max / POC input 0 = inactive 1 = pressure switch-max 2 = POC 3 = pressure switch valve proving			x	

340	Limite ripetizioni perdita di fiamma (valore fabbrica = 2 - range impostazione:1 - 2)	Repetition limit loss of flame (default value= 2 - range:1 - 2)	OEM		x	
341	Combustibile 1 - Gas: esecuzione controllo tenuta (valore fabbrica = 2) **0** = no controllo tenuta **1** = controllo tenuta in avviamento **2** = controllo tenuta in arresto **3** = controllo tenuta in arresto e in avviamento	Fuel 1 - Gas: execution proving test (default value= 2) **0** = no proving test **1** = proving test on startup **2** = proving test on shutdown **3** = proving test on shutdown and on startup	OEM / Service		x	
342	Combustibile 1 - Gas: tempo evacuazione controllo tenuta (valore fabbrica = 3s - range impostazione:0.2s - 10s)	Fuel 1 - Gas: proving test evacuation time (default value = 3s - range:0.2s - 10s)	OEM		x	
343	Combustibile 1 - Gas: tempo pressione atmosferica controllo tenuta (valore fabbrica = 10s - range impostazione:0.2s - 60s)	Fuel 1 - Gas: proving test time atmospheric pressure (default value = 10s - range:0.2s - 60s)	OEM		x	
344	Combustibile 1 - Gas: tempo riempimento controllo tenuta (valore fabbrica = 3s - range impostazione:0.2s - 10s)	Fuel 1 - Gas: proving test filling time (default value = 3s - range:0.2s - 10s)	OEM		x	
345	Combustibile 1 - Gas: tempo test pressione gas (valore fabbrica = 10s - range impostazione:0.2s - 60s)	Fuel 1 - Gas: proving test time gas pressure (default value = 10s - range:0.2s - 60s)	OEM		x	
346	Combustibile 1 - Gas: tempo attesa consenso pressostato di minima (valore fabbrica = 10s - range impostazione:0.2s - 60s) Se la pressione del gas è troppo bassa, in fase 22 non verrà eseguito l'avviamento: il sistema compie un numero impostabile di tentativi finché non si arriva al blocco. Il tempo di attesa tra un tentativo e il successivo viene raddoppiato ad ogni tentativo.	Fuel 1 - Gas: waiting time gas shortage (default value = 10s - range:0.2s - 60s) If the gas pressure is too low, in phase 22 the startup will not be performed: the system tries for a certain number of times the it locks out. The time interval between two attempts is doubled at each attempt.	OEM		x	
348	Combustibile 1 - Gas: Tempo di post-ventilazione 3 (abortito con regolatore di potenza (LR)-ON	Fuel 1 - Gas: Postpurge time 3 (abortion with load controller (LR)-ON	OEM / Service		x	
361	Combustibile 1 - Olio: sonda rilevazione fiamma attivo (valore fabbrica = 0) **0** = QRB../QRC.. **1** = ION / QRA..	Fuel 1 - Oil: active detector flame evaluation (default value = 0) **0** = QRB../QRC.. **1** = ION / QRA..	OEM / Service		x	

362	Combustibile 1 - Olio: preventilazione (valore fabbrica = 1) **1** = attivo **0** = non attivo In ambito civile la norma EN267 rende obbligatoria la preventilazione. In ambito industriale, vedere i casi in cui la norma EN746-2 prevede la possibilità di non fare la preventilazione.	Fuel 1 - Oil: prepurging (default value = 1) **0** = deactivated **1** = activated **0** = deactivated WARNING: in the civil field, the prepurge is mandatory according to the standard EN267. In the industrial fiels, check if the pre purge can be avoided according to the standard EN746-2	OEM / Service		x	
365	Combustibile 1 - Olio: tempo preventilazione (valore fabbrica = 15s - range impostazione:15s - 60min)	Fuel 1 - Oil: prepurging time (default value = 15s - range:15s - 60min)	OEM / Service		x	
366	Combustibile 1 - Olio: tempo preaccensione (valore fabbrica = 2s - range impostazione:0.2s - 60min)	Fuel 1 - Oil: preignition time (default value = 2s - range:0.2s - 60min)	OEM / Service		x	
367	Combustibile 1 - Olio: tempo di sicurezza 1 (TSA1) (valore fabbrica = 5s - range impostazione:0.2 - 15s)	Fuel 1 - Oil: safety time 1 (TSA1) (default value = 5s - range:0.2 - 15s)	OEM		x	
369	Combustibile 1 - Olio: tempo di risposta a cadute di pressione entro TSA1 e TSA2 (valore fabbrica = 1.8s - range impostazione:0.2s - 14.8s)	Fuel 1 - Oil: time to respond to pressure faults in TSA1 and TSA2 (default value = 1.8s - range:0.2s - 14.8s)	OEM		x	
370	Combustibile 1 - Olio: Intervallo 1 (valore fabbrica = 2s - range impostazione:0.2s - 60min)	Fuel 1 - Oil: Interval 1 (default value = 2s - range:0.2s - 60min)	OEM / Service		x	
371	Combustibile 1 - Olio: tempo di sicurezza 2 (TSA2) (valore fabbrica = 3s - range impostazione:0.2 - 10s)	Fuel 1 - Oil: safety time 2 (TSA2) (default value = 3s - range:0.2 - 10s)	OEM		x	
372	Combustibile 1 - Olio: Intervallo 2 (valore fabbrica = 2s - range impostazione:0.2s - 60min)	Fuel 1 - Oil: Interval 2 (default value = 2s - range:0.2s - 60min)	OEM / Service		x	
373	Combustibile 1 - Olio: Tempo postcombustione (valore fabbrica = 8s - range impostazione:0.2s - 60s)	Fuel 1 - Oil: Postcombustion time (default value = 8s - range:0.2s - 60s)	OEM / Service		x	
374	Combustibile 1 - Olio: Tempo postventilazione (valore fabbrica = 0.2s - range impostazione:0.2s - 180min)	Fuel 1 - Oil: Postpurging time (default value = 0.2s - range:0.2s - 180min)	OEM / Service		x	
377	Combustibile 1 - Olio: Pressostato olio di massima / ingressoPOC 0 = inattivo 1= pressostato olio di massima 2= POC	Fuel 1 - Oil: Pressure switch-max/POC input 0 = inactive 1 = pressure switch-max 2 = POC			x	

380	Limite ripetizioni perdita di fiamma (valore fabbrica = 2 - range impostazione:1 - 2)	Repetition limit value loss of flame (default value = 2 - range:1 - 2)	OEM		x	
381	Combustibile 1 - Olio: tempo iniezione olio (valore fabbr. = 1) **0** = preaccensione corta (Ph38 - fase programma 38) **1** = preaccensione lunga (con ventilatore) (Ph22 - fase programma 22)	Fuel 1 - Oil: time oil ignition (default value = 1) **0** = short preignition (Ph38-progr. phase 38) **1** = long preignition (with fan) (Ph22 - program phase 22)	OEM / Service		x	
384	Combustibile 1 - Olio: Tempo di post-ventilazione 3 (abortito con regolatore di potenza (LR)-ON	Fuel 1 - Oil: Postpurge time 3 (abortion with load controller (LR)-ON	OEM / Service		x	

Block 400: Setting air/fuel ratio curves

Param.	Descrizione	Description	Password	LMV20 LMV27	LMV26	LMV37
401	Curve controllo servocomando combustibile (F): si accede alla lista dei punti da impostare (da P0 a P9) - consultare paragrafo “Impostazione curve”	Ratio control curve fuel actuator (F): it accesses to the parameter list of the points to be set (P0 to P9) - see paragrapf “Setting the curves”	OEM / Service	x	x	x
402	Curve controllo servocomando aria (A): si accede alla lista dei punti da impostare (da P0 a P9) - consultare paragrafo “Impostazione curve”	Ratio control curve air actuator (A): it accesses to the parameter list of the points to be set (P0 to P9) - see paragraph “Setting the curves”	OEM / Service	x	x	x
403	Curve controllo inverter (F + A): si accede alla lista dei punti da impostare (da P0 a P9) - consultare paragrafo “Impostazione curve”	Ratio control curves VSD (curve setting only)	SO		x	x
404	Combustibile 1 - Curve controllo servocomando combustibile 1 (F): si accede alla lista dei punti da impostare (da P0 a P9) - consultare paragrafo “Impostazione curve”	Fuel 1: Ratio control curves fuel actuator (curve setting only)	SO		x	
405	Combustibile 1 - Curve controllo servocomando aria (A): si accede alla lista dei punti da impostare (da P0 a P9) - consultare paragrafo “Impostazione curve”	Fuel 1: Ratio control curves air actuator (curve setting only)	SO		x	
406	Combustibile 1 - Curve controllo inverter (F + A): si accede alla lista dei punti da impostare (da P0 a P9) - consultare paragrafo “Impostazione curve”	Fuel 1: Ratio control curves VSD (curve setting only)	SO		x	

Block 500: Air/fuel ratio control

Param.	Descrizione	Description	Password	LMV20 LMV27	LMV26	LMV37
501	Posizione **servocomando combustibile** in assenza di fiamma (no-flame) **Indice 0** = posizione di sosta = 0° **Indice 1** = posizione preventilazione = 0° **Indice 2** = posizione postventilazione = 15°	No-flame position fuel actuator **Index 0** = no-load position = 0° **Index 1** = prepurge position = 0° **Index 2** = postpurge position = 15°	OEM / Service	x	x	x
502	Posizione **servocomando aria** in assenza di fiamma (no-flame) **Indice 0** = posizione di sosta = 0° **Indice 1** = posizione preventilazione = 90° **Indice 2** = posizione postventilazione = 45°	No-flame position air actuator **Index 0** = no-load position = 0° **Index 1** = prepurge position = 90° **Index 2** = postpurge position = 45°	OEM / Service	x	x	x
503	**% giri motore con inverter** 0% = ventilatore fermo, 100% = ventilatore al massimo della velocità **Indice 0** = posizione di sosta = 0% **Indice 1** = posizione preventilazione = 100% **Indice 2** = posizione postventilazione = 50%	No-flame speeds VSD Index 0 = no-load speed = 0% Index 1 = prepurge speed = 100% Index 2 = postpurge speed = 50%	OEM / Service		x	x
504	Combustibile 1 - Posizione **servocomando combustibile** in assenza di fiamma (no-flame) **Indice 0** = posizione di sosta = 0° **Indice 1** = posizione preventilazione = 0° **Indice 2** = posizione postventilazione = 15°	Fuel 1 No-flame position fuel actuator **Index 0** = no-load position = 0° **Index 1** = prepurge position = 0° **Index 2** = postpurge position = 15°	OEM / Service		x	
505	Combustibile 1 - Posizione **servocomando aria** in assenza di fiamma (no-flame) **Indice 0** = posizione di sosta = 0° **Indice 1** = posizione preventilazione = 90° **Indice 2** = posizione postventilazione = 45°	Fuel 1 No-flame position air actuator **Index 0** = no-load position = 0° **Index 1** = prepurge position = 90° **Index 2** = postpurge position = 45°	OEM / Service		x	
506	Combustibile 1 - **% giri motore con inverter** 0% = ventilatore fermo, 100% = ventilatore al massimo della velocità **Indice 0** = posizione di sosta = 0% **Indice 1** = posizione preventilazione = 100% **Indice 2** = posizione postventilazione = 50%	Fuel 1 No-flame speeds VSD Index 0 = no-load speed = 0% Index 1 = prepurge speed = 100% Index 2 = postpurge speed = 50%	OEM / Service		x	
522	Tempo rampa di salita inverter	Ramp up	OEM / Service		x	x
523	Tempo rampa di discesa inverter	Ramp down	OEM / Service		x	x

542	Activation of VSD / PWM fan (PWM = Pulse-Width Modulation) 0=deactived 1=actived	Activation of VSD / PWM fan (PWM = Pulse-Width Modulation)	OEM / Service		x	x

			Parameter 544						
			Modulation **32s**	Modulation **48s**	Modulation **64s**	Modulation **80s**			
544	Actuator	Actuating speed parameter 613	Max. delta between the curve points				OEM / Service	x	x	x
	Actuator (<= 5Nm)	5s / 90°	31°	46°	62°	77°				
	Actuator **SQM33.7**	17s / 90°	**9° (1)**	13°	18°	22°				

(1) in this case the max. position of 90° can't be reached

545	Percentuale minima di carico per modulazione (valore fabbrica = n.d. - range impostazione:20%-100%)	Lower load limit (default value = n.d. - range:20%-100%)	OEM / Service	x	x	x
546	Percentuale massima di carico per modulazione (valore fabbrica = n.d. - range impostazione:20%-100%)	Higher load limite (default value = n.d. - range:20%-100%)	OEM / Service	x	x	x
565	Combustibile 1 - Percentuale minima di carico per modulazione (valore fabbrica = n.d. - range impostazione:20%-100%)	Fuel 1 Lower load limit (default value = n.d. - range:20%-100%)	OEM / Service		x	
566	Combustibile 1 - Percentuale massima di carico per modulazione (valore fabbrica = n.d. - range impostazione:20%-100%)	Fuel 1 Higher load limite (default value = n.d. - range:20%-100%)	OEM / Service		x	

Block 600: Actuators

Param.	Descrizione	Description	Password	LMV20 LMV27	LMV26	LMV37
601	Impostazione punto di riferimento **Indice 0** = combustibile **Indice 1** = aria **0** = chiuso (<0°) **1** = aperto (>90°)	Selection of reference point **Index 0** = fuel **Index 1** = air **0** = closed (<0°) **1** = open (>90°)	OEM	x	x	x
602	Direzione rotazione del servocomando **Indice 0** = combustibile **Indice 1** = aria **0** = antiorario **1** = orario VEDI MESSAGGIO DI “ATTENZIONE” RIPORTATO SOTTO.	Actuator’s direction of rotation **Index 0** = fuel **Index 1** = air **0** = counterclockwise **1** = clockwise SEE “WARNING” MESSAGE QUOTED BELOW.	OEM	x	x	x
606	Limite tolleranza per monitoraggio posizione (0.1°) **Indice 0** = combustibile **Indice 1** = aria	Tolerance limit of position monitoring (0.1°) **Index 0** = fuel **Index 1** = air	OEM / Service	x	x	x
608	Combustibile 1 - Impostazione punto di riferimento **Indice 0** = combustibile **Indice 1** = aria **0** = chiuso (<0°) **1** = aperto (>90°)	Fuel 1 : Selection of reference point **Index 0** = fuel **Index 1** = air **0** = closed (<0°) **1** = open (>90°)	OEM		x	
609	Combustibile 1 - Direzione rotazione del servocomando **Indice 0** = combustibile **Indice 1** = aria **0** = antiorario **1** = orario VEDI MESSAGGIO DI “ATTENZIONE” RIPORTATO SOTTO.	Fuel 1 : Actuator’s direction of rotation **Index 0** = fuel **Index 1** = air **0** = counterclockwise **1** = clockwise SEE “WARNING” MESSAGE QUOTED BELOW.	OEM		x	
610	Combustibile 1 - Limite tolleranza per monitoraggio posizione (0.1°) **Indice 0** = combustibile **Indice 1** = aria	Fuel 1 : Tolerance limit of position monitoring (0.1°) **Index 0** = fuel **Index 1** = air	OEM / Service		x	

611	Tipo di riferimento dei servocomandi index 0 = fuel (default = 0 (riferimento standard) index 1 = air (default = 0 (riferimento standard) 0 = standard 1 = fermo entro il raggio utile 2 = fermi interni (SQN1...) 3 = entrambi	Type of referencing Index 0 = fuel Index 1 = air 0 = standard 1 = stop within usable range 2 = internal stop (SQN1...) 3 = both	OEM	x	x	x
612	Combustibile 1 - Tipo di riferimento del servocomando combustibile 0 = standard 1 = fermo entro il raggio utile 2 = fermi interni (SQN1...) 3 = entrambi	Fuel 1: Type of reference for fuel actuator 0 = standard 1 = range stop in the usable range 2 = internal range stop (SQN1…) 3 = both	OEM		x	
613	Tipo di servocomando **Indice 0** = combustibile **Indice 1** = aria 0 = 5s / 90° (1Nm, 1,2Nm, 3Nm) 1 = 10s / 90° (6Nm) 2 = 17s / 90° (10Nm)	Type of actuator **Index 0** = fuel **Index 1** = air 0 = 5 s / 90° (1Nm, 1,2Nm, 3Nm) 1 = 10 s / 90° (6Nm) 2 = 17 s / 90° (10Nm)	OEM	x	x	x
614	Combustibile 1 :Tipo di servocomando **Indice 0** = combustibile **Indice 1** = aria 0 = 5s / 90° (1Nm, 1,2Nm, 3Nm) 1 = 10s / 90° (6Nm) 2 = 17s / 90° (10Nm)	Fuel 1 : Type of actuator **Index 0** = fuel **Index 1** = air 0 = 5 s / 90° (1Nm, 1,2Nm, 3Nm) 1 = 10 s / 90° (6Nm) 2 = 17 s / 90° (10Nm)	OEM		x	
641	Attivazione procedura di standardizzazione inverter (riferirsi al codice errore 82) 0 = standardizzazione disattivata 1 = standardizzaione attivata	Control of speed standardization of VSD Error diagnostics of negative values (refer to error code 82)0 = no speed standardization 1 = speed standardization active			x	x

645	Configurazione uscita analogica % di carico (valore fabbrica = 0) **0** = DC 0..10 V **1** = DC 2..10 V **2** = DC 0/2..10 V	Configuration of analog output (default value = 0) **0** = DC 0..10 V **1** = DC 2..10 V **2** = DC 0/2..10 V	OEM / Service	**LMV27**	x	x

⚠	**ATTENTION:** as for SQM3x actuators, set the direction according to the acutator function. As far as SQN1x actuators, set **always** the counterclockwise direction, independently from the model chosen for the specific function.

Block 700: Error history

Param.	Descrizione	Description	Password
701	Storico errori: 701 - 725.01.codice	Error history: 701 - 725.01.code	Service / Info
°	Storico errori: 701 - 725.02.codice diagnostico	Error history: 701 - 725.02.diagnostic code	Service / Info
°	Storico errori: 701 - 725.03.classe errore	Error history: 701 - 725.03.error class	Service / Info
°	Storico errori: 701 - 725.04.fase	Error history: 701 - 725.04.phase	Service / Info
°	Storico errori: 701 - 725.05.contatore avvii	Error history: 701 - 725.05.startup counter	Service / Info
725	Storico errori: 701 - 725.06.carico	Error history: 701 - 725.06.load	Service / Info

Block 900: Process data

Param.	Descrizione	Description	Password
903	Potenza attuale (valore fabbrica = 0% - range impostazione = 0-100%) **Indice 0** = combustibile **Indice 1** = aria	Current output (default value = 0% - range = 0-100%) **Index 0** = fuel **Index 1** = air	Service / Info
922	Posizione incrementale servocomandi (valore fabbrica = 0% - range impostazione = -50% - 150%) **Indice 0** = combustibile **Indice 1** = aria	Incremental position of actuators (default value = 0% - range = -50% - 150%) **Index 0** = fuel **Index 1** = air	Service / Info
935	Giri motore assoluti	Absolute speed	OEM / Service
936	Giri motore in fase standardizzazione	Standardized speed	Service / Info
942	Sorgente potenza attiva	Active load source	OEM / Service
945	Solo con **LMV26:** Combustibile attuale 0 = combustibile 0 1 = combustibile 1	Actual fuel 0 = fuel 0 1 = fuel 1	Service / Info
947	Risultato interrogazione contatti (codifica bit)	Result of contact sensing (bit-coded)	Service / Info
950	Stato relè (codifica bit)	Required relay state (bit-coded)	Service / Info
954	Intensità di fiamma (0% ÷ 100%); minima corrente 30% = 4µA; massima corrente100% = 16µA; massima corrente ammissibile = 40µA.	Intensity of flame (range = 0% - 100%) minimum current 30% = 4µA; maximum current100% = 16µA; maximum current possible = 40µA.	Service / Info
961	Stato moduli esterni e display	Status of external modules and display	Service / Info
981	Errore memoria: codice	Error memory: code	Service / Info
982	Errore memoria: codice diagnostica	Error memory: diagnostic code	Service / Info
992	Flag di errore	Error Flags	OEM / Service

Actuators references

An incremental transducer is used to ensure position feedback. Referencing of the actuators must be performed after power-on. In addition, at the end of each shutdown in phase 10, the actuators are referenced to ensure that individual stepping errors, which could lead to shutdown, do not accumulate. If a position error occurs, the system switches to the safety phase (phase 01), enabling the actuators with detected position errors to be referenced. During the following phase 10, the only actuators that are referenced are those that were not referenced before in the safety phase (phase 01). The position of the reference point can be selected depending on the type of burner design, either the CLOSED position (<0°) or the OPEN position (>90°).

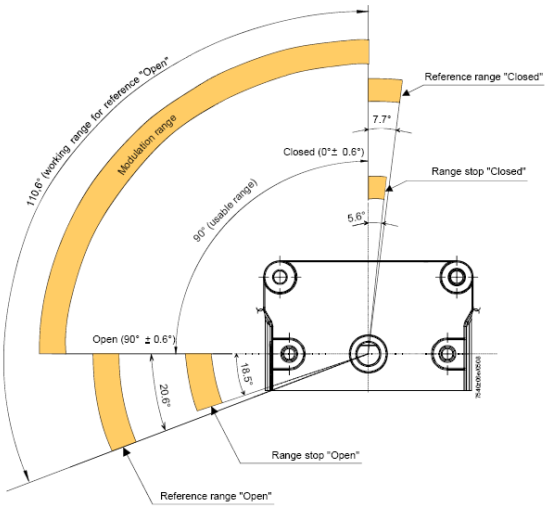

Param.	Descrizione	Description	Password
601	Impostazione punto di riferimento **Indice 0** = combustibile **Indice 1** = aria **0** = chiuso (<0°) **1** = aperto (>90°)	Selection of reference point **Index 0** = fuel **Index 1** = air **0** = closed (<0°) **1** = open (>90°)	OEM

If the acutators position is exchanged (error code: 85), the burner will lockout and will try to adjust for three times, then it will lock out.

Gas proving system

Valve proving is only active when firing on gas. This is a leakage test designed to detect leaking gas valves and, if necessary, to prevent the valves from opening or ignition from being switched on. Lockout is initiated. When performing valve proving, the gas valve on the burner side is opened first to bring the test space to atmospheric pressure. Then, the valve is closed whereupon the pressure in the test space must not exceed a certain level, measured by the gas leakage pressure switch (PGCP). Then, the gas valve on the mains side is opened to fill the gas pipe. When the valve is closed again, the gas pressure must not drop below a certain level. Valve proving can be parameterized to take place on startup, shutdown, or on both phases.

Air-fuel curve points

There are 10 air-fuel curve points: T

P0 = ignition position. Only for ignition; after the ignition, the burner works between Point P1 (low flame) and point P9 (high flame) without going back to P0.

P0 can be set everywhere irrespective of all the other points.

COMMISSIONING THE BURNER

The LMV2x complete programming must be performed on units that has never been set before or reset units (e.g. spare parts).
The programming procedure is performed by setting the following main parameters:

1 if LMV.. is a spare part, insert burner ID (parameter **113**) at least 4 digit.
2 type of fuel train (parameter "**201**")
3 air/fuel ratio curvepoints (Block "**400**")
4 maximum load percentage (parameter "**546**")
5 minimum load percentage (parameter "**545**")

⚠	CAUTION: if an error message as "Loc.." appears when the unit is turned to on for the first time, press ENTER (InFo) until the "Reset" message apperas. After few seconds, the message "OffUpr" will be displayed.

This message shows that the unit has not been programmed before or that the operating mode (fuel train) is not set yet or that the unit has not been completely programmed. Pree keys **F** (Fuel) and **A** (Air) at the same time unitl the display shows **code** and next it will show 7 bars the first on the left is flashing. If the display shows "Off", it means that the unitis already set, then see the instructions on chapter "Adjsuting the burner with LMV2x already programmed").

At the first LMV startup, the AZL display will show

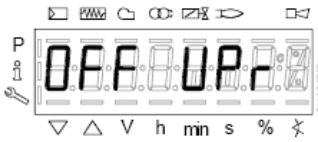

It means that the unit was never set or that no mode was chisen or that some parameters have to be set furthert.
Push F (fuel) and A (Air) together untilthe display shows **code** and then a 7 digit dashed line blinking on the left.

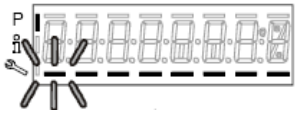

Press the "**+**" key until the first character of the password (the default password is 9876), then press **ENTER (InFo)**, the character now turn to a bar while the second bar starts flashing. Press "**+**" until the second character is entered, then press **ENTER (InFo)**.
Repeat the procedure until the last character si set, then press **ENTER (InFo)**, then **ENTER** again until the message **PArA** appears: then the first parameters block ("**400**") will be shown:

Press **ENTER (InFo)** again, to gain access to programming the operating mode (fuel train):

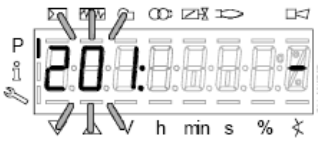

In the example, set configuration **1** = direct gas ignition (G mod).
Other possibilities are below listed:

the types of fuel trains are the following:

Param.	Descrizione	Description	Password
201	Modalità funzionamento bruciatore (rampa comb., mod. / multistadio, servocom., ecc.) __= non definito (cancellazione curve)___= **1** = accensione diretta a gas (G mod) **2** = accensione tramite pilota gas con attacco tra le due elettrovalvole EV1/EV2 gas (Gp1 mod) **3** = accens. tramite pilota gas con attacco a monte dell'elettrov. EV1 del gas (Gp2 mod) **4** = accensione a gasolio - modul. (Lo mod) **5** = accens. a gasolio - bistadio (Lo 2 stage) **6** = accens. a gasolio - tristadio (Lo 3 stage)	Burner operating mode (fuel train, mod / multi-stage, actuators, etc.) __= undefined (delete curves) **1** = gas direct ignition(G mod) **2** = gas pilot ignition with connection between the two gas solenodi valves EV1/EV2 (Gp1 mod) **3** = gas pilot ignition with connection upstrem the gas solenoid valve EV1 (Gp2 mod) **4** = Light Oil - modulating (Lo mod) **5** = Light Oil - 2stages (Lo 2 stage) **6** = Light Oil - 3stages (Lo 3 stage)	OEM / Service

G mod

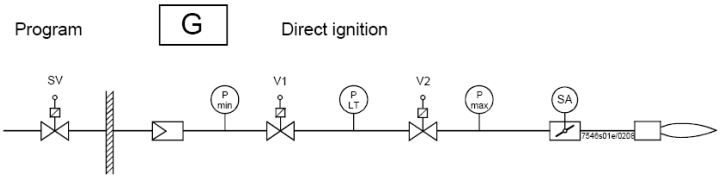

Gp1 mod

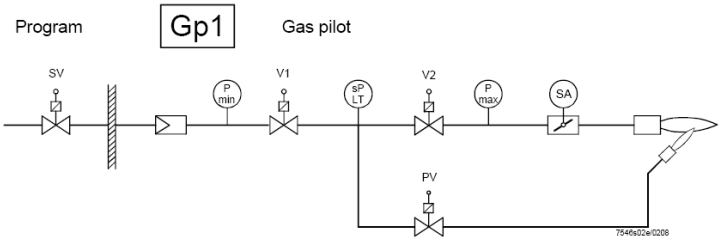

Gp2 mod

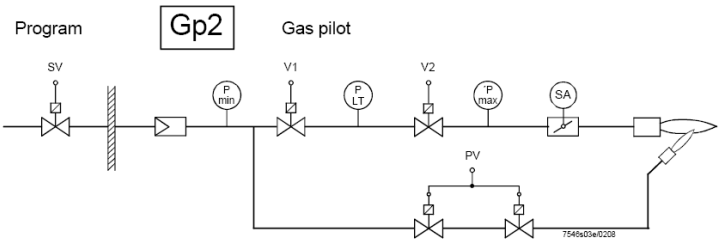

Lo mod

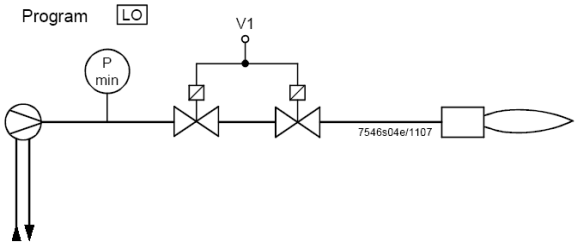

Lo 2-stage

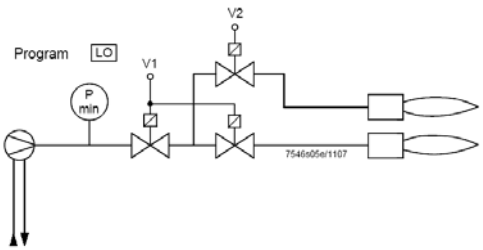

Lo 3-stage

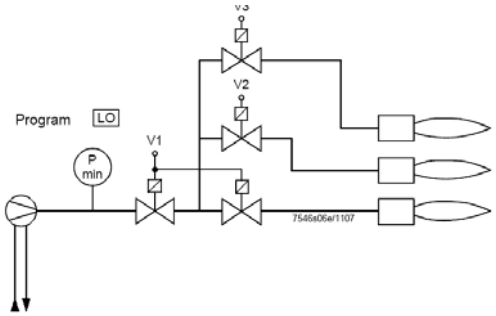

In the example the Gmod gas train has been set (Configuration “1”).
Choose the fuel train by pressing ENTER, then press “**+**” / “**-**”. Press ENTER to confirm: number “1” will appear on the right side of the display.

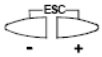

Then press ESC

to quit. The following display is:

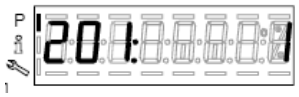

Press “**+**” to show the first point to be set P0.

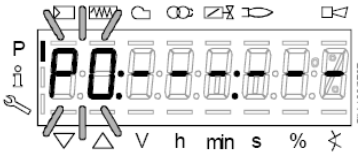

Press **F** and **“+”** to increase the opening angle of the fuel actuator “**0F”** until the requested value is reached (for example 12°÷15°, see below) for the ignition point; or press **F** and **“-”** to decrease the angle:

To set the air damper opening angle “0A” in the ignition point (10° for example - see below), press “A” and “+” “A” and “-” at the same time:

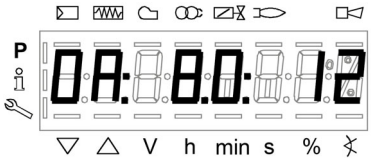

LMV37:
Now the air and fuel quantities are set at the ignition point P0:
By pressing “+”, point P9 can be programmed to set the air and fuel values at the maximum output

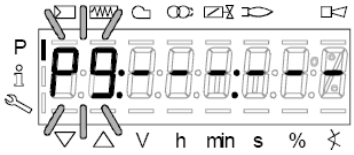

go on as described above to the the opening angles of the air actuator (A) and fuel actuator (F):

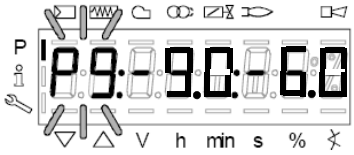

⚠	**CAUTION:** at the first burner adjustment, it is recommended to set the maximum output P9 at the same value (or little higher) of the ignition point, in order to safely reach point P9 next (see next paragraph).

By pressing “+” the display will show:

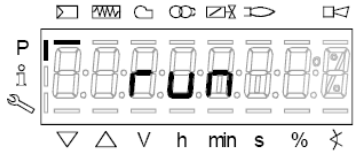

The burner is ready to startup. Now it is possible to re-set the curve points while the burner is operating (“warm setting”) by pressing the ENTER (InFo) or while the burner is in stand-by mode (“cold setting”) by pressing ENTER .

Warm setting

1 Once pressed button **"enter"** and the chain thermostats open (X5-03 terminals), the LMV.. show Ph12.Then close the chain termostat and the unit performs the prepurge cycle (see "Phases List") and stops at the ignition point P0 without ignition anyway.

2 By pressing "+", the burners lights abd the air/fuel ratio can be properly set in presence of flame.

3 By pressing "+" again, the next point P1 is shown (eqaul to P0 as the unit automatically set P0=P1);

4 By pressing "+" again, the "Calc" message will be displayed: the unit is processing the sir/fuel ratio curvepoints until point P9, previuosly set. Once the processing is perfomed the calculated point P2 is shown.By pressing "+" again, the "Calc" message will be displayed: the unit is processing the sir/fuel ratio curvepoints until point P9, previuosly set. Once the processing is perfomed the calculated point P2 is shown.

5 By pressing "+", it is possible to go through the processed curve until point P9 is reached.

Note: if the point doesn't blink, servomotors are still running.

6 n order to set P9 with the gas flow rate according to the generator needs, follow this procedure:

Note: the purpose is to fully open the gas throttle and later on to adjust the gas flow rate through the gas pressure governor.

- Operate smoothly opening by just a few degrees the air damper and later on increasing the gas throttle opening it by a few degrees. Keep monitoring the flue through the flue analyser. Keep the air excess inside normal figures (from 3% to 7% residual O2) operating by means for the air damper servomotor;
- Keep increasing the air damper opening and then the gas throttle, as done in the sequence above, remebering to get the full firing rate wih the gas throttle fully open (or the oil pressure regulator at its maximum pressure position).

See example below:

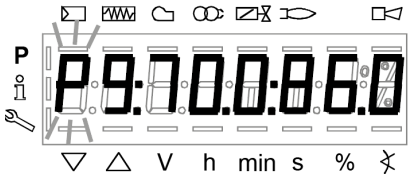

- If, while opening the gas throttle, the gas flow rate was too high, reduce it only through the gas governor and keep opening the throttle until the 60÷70° position is got.
- If the gas train is equipped with a governor and a valve with an adjustable gas flow rate, fully open also this last valve, smoothly! The gas flow rate is always set by means of the governor.

7 As soon as all the devices are fully open, set the gas flow rate through the governor.

8 Set the air damper position in order to get the reccomended air excess (3÷4.8% O2 on gas and 2.9÷4.9 % on oil).

Note1: on high flame, if the gas flow rate is changed by means of the governor, all the other points below high flame must be checked again.

9 After having set the high flame point P9, keep "-" pressed for some seconds unitl "Calc" is displayed in order to have the LMV recalculating all the points:

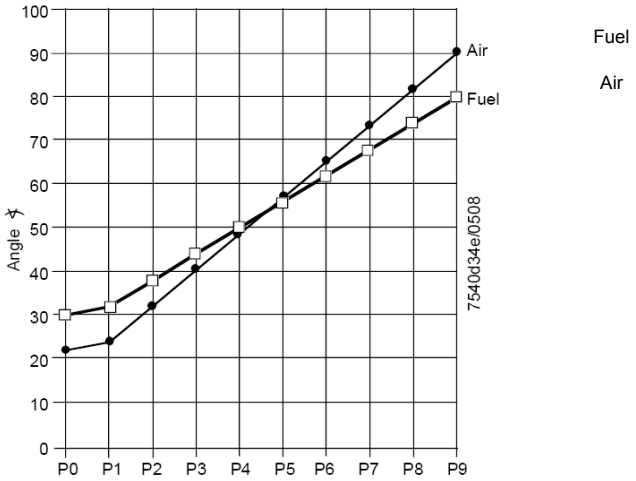

10 the unit will automatically reach point P8 processed: check the combustion values in this point and, if necessary, change it.

11 Press "-" to go down to the lower points and check the combustion values, change the points if necessary.

Note: if in an intermediate point (for example P5), the change of the actuators position is important according to the processed point

P5, keep pressing “-” unitl “Calc” is displayed. The curve will be processed again downwards point P1.

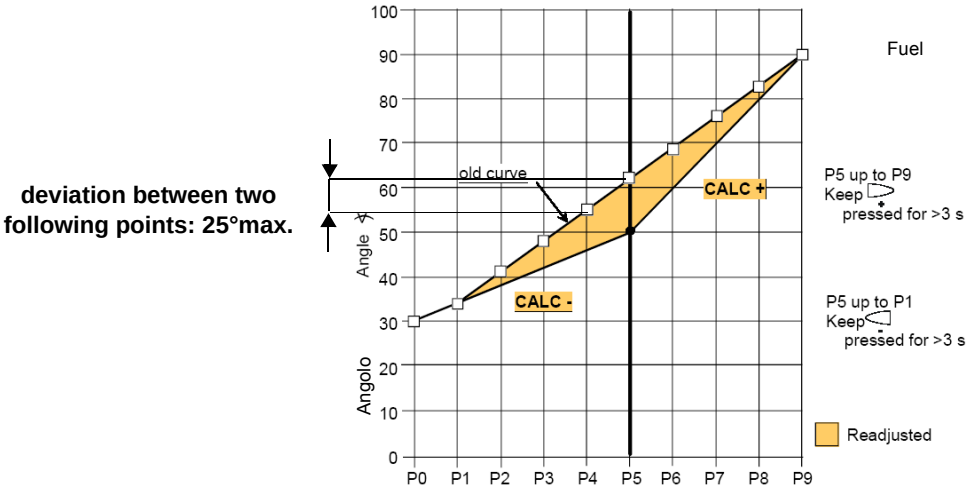

12 press “-” to go through the lower points and check the combustion values, if necessary change the points as described above.

13 By pressing ESC, at the end of the points adjusments, the parameter “**546”** (setting the maximum load) will be displayed; press ENTER (InFo), then “+” until 100%, then press ENTER (InFo) again, ESC and then “+”.

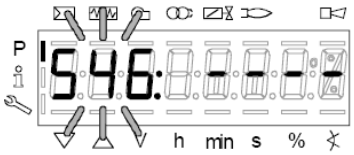

14 The parameter “**545”** (setting the minimum load) is displayed: press ENTER (InFo), then “+” until 20%. Press ENTER, then press ESC for three times. The message “oP” will be displayed as well as the load percentage at the burner is working on.

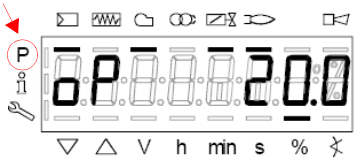

he hyphen related to the symbol “P” (highlited in the picture) will be off to show that the unit exited the programmig mode. The burner will then work automatically, following the curve set.

.**Note1:** if the curvepoints settings is quit before end (by pressing ESC or for a faulty shutdown), the message “OFF UPr” (Start prevention) will be diplayed until all the curvepoints will be set.

Note2: if the gas flow rate at high flame point (maximum load) is changed by means of the pressure stabiliser, all the curvepoints must be checked by going through the curve downwards and resetting them if necessary.

Note3: if the point does not flash, it means thet the actuators have not reached the set position yet.

Note4: if an error occurs causing a safety shutdwon during the processing of the curve, the processing itself will be interrupted.

Cold setting

The ”cold setting“ (without flame) can be performed only when all the curve points values are known (for instance, in case of replacement).

⚠	**When the burner is off, if you modify one curve set point, when the burner restarts the AZL2x shows OFF UPr (OFF UPr0 or OFF UPr1 for LMV26). The LMV.. then, requires a new "warm" startup (see procedure paragraph "Warm Setting”) by checking again all points of curve from P0 to P9.**

BURNER STARTUP WITH LMV2x ALREADY PROGRAMMED

Once the LMV turns on, the AZL display will show

The burners is basically factory set. The air/fuel ratio curve is set with the maximum output point P9 a little higher or equal to P0. To adjust the burner on the plant site, adjust the maximum output point to the flow rate values really requested. Then go through the curve-points, by pressing “+” several times to reach point P9: then adjust the air actuator position (for the air damper) and the fuel acttuator (for the butterfly valve, in case of gas or the oil pressure governor incase of oil), by adjusting the fuel flow rate by means of the gas pressure stabiliser (for gas) or the oil pressure governor (for oil), checking the combustion valeus contemporarly. Once the burner is adjusted at the maximum output, press “-” for more than 5 seconds to process the curve downwards. The curve is then a straight line: go on checking the combustion values point by point; change them if necessary and in case linearise the curve again.

Before starting the burner up, press **F** and **A** at the same time

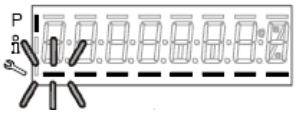

enter the password following the procedure on chapter “Programming LMV2x”.

Press ENTER until the display will show:

Press ENTER again: it will show

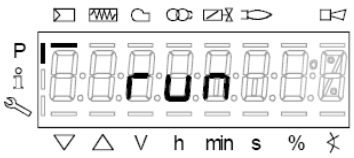

press ENTER (InFo)

: the display will show phase 12.

Ph12: *Standby* phase (stationary)

Ph12: *Standby* phase (stationary)

By closing the thermostatic series, the burner startup cycle will take place:

Ph22: *Fan ramp up* phase (fan motor = ON, safety shutoff valve = ON)

Ph24: *Traveling to prepurge position* phase

Ph30: *Prepurge* phase

Ph36: *Traveling to ignition position* phase

Ph38: *Preignition* phase

Ph40: *1st safety time* phase (ignition transformer ON)

Ph42: *1st safety time* phase (ignition transformer OFF), preignition time OFF

Ph44: *Interval1*

The startup sequence stops at phase 44.

The burners is lit and is in“P1” position (low flame point):

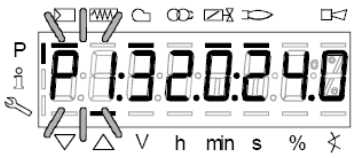

Set the air/fuel ratio curvepoints as described on chapter “Programming the LMV2x”

Note: the other phases are
Ph60 = operation (OP= in modulation)
Ph62 = travelling to shutdown
Ph70 = off but in prepurge after the burntime
Ph72 = travelling to postpurging
Ph74 = postpurge (countdown is displayed)

Press ESC the parameter “**546**” (Setting the maximum load) is displayed

Then press to exit the programming mode.
The display will show:

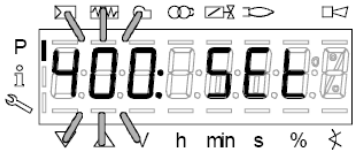

Press for a second time: the display will show the load percentage the burner is working at.

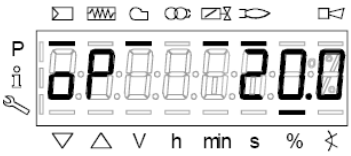

When the generator reaches the programmed set-point, the burner will be in stand-by: the display will show

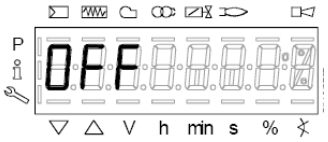

Reset / manual lockout

The system can be manually locked by simultaneously pressing the **ENTER (InFo)** button and **any other button** on the AZL2.... This function allows the user to stop the system from the operating level should an emergency occur. When making a reset, the following actions are carried out:

- Alarm relay and the fault display are off
- the lockout position is cancelled
- the unit performs a reset, then it switches to stand-by

If the unit is in the lockout position, a reset can be made by pressing the **InFo** button for 1…3 seconds. The function is available only when the unit is in the lockout position. Longer or shorter pushes on the button do not produce a reset so that the system maintains the lockout position.

Codice errore / Error code	Codice diagnostico / Diagnostic code	Descrizione / Meaning
167	2	/ Manual lockout via AZL2…

Timeout for menu operation

The time for automatically leaving the parameter setting level can be adjusted between 10 and 120 minutes, using the parameter 127 (Timeout for menu operation). If, during that period of time, there is no operation via the AZL2..., the parameter setting level is quit and the password level reset to *Info / Service*.

Caution! In addition, this timeout or interruption of communication between the LMV2.. and the AZL2... during the time the curves are set leads to lockout!

Codice erroreC Error code	Codice diagnostico Diagnostic code	DescrizioneMeaning
167	8	Manual locking

Entering the Parameter levels

By means of a proper use of the keys, it is possible to enter the various level parameters, as shown in the following flow chart:

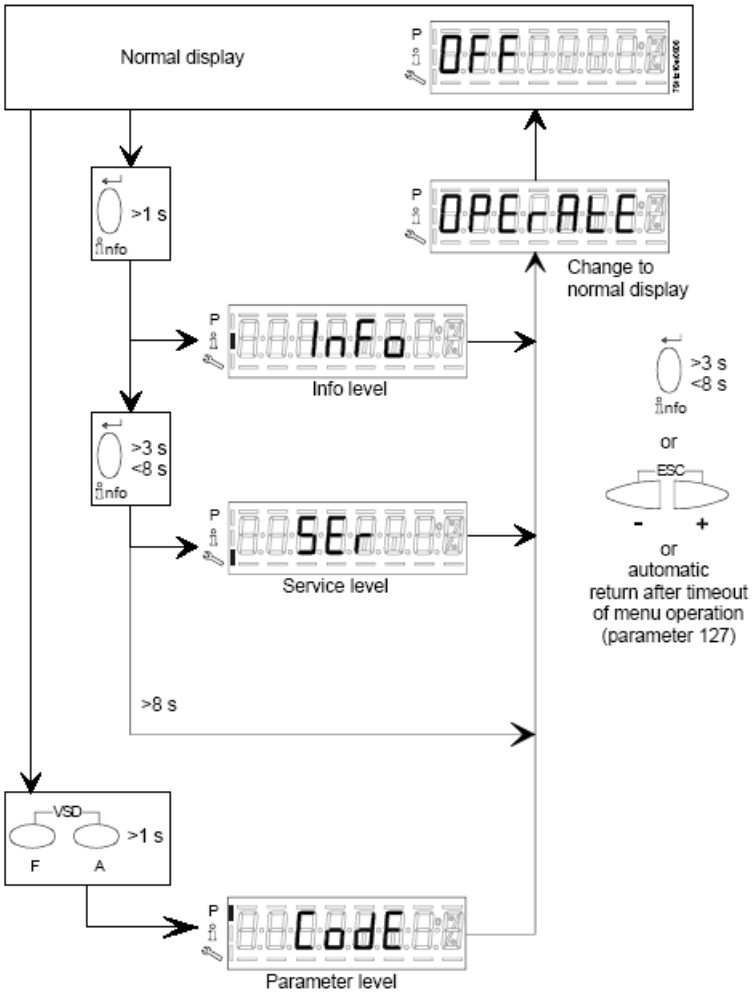

The burner and consequently the LMV2x.. are factory set; the air and fuel curves as set as well.

Info level

To enter the **Info** level, proceed as follows:

1 in any menu position, press keys **+** and **-** at the same time, then the program will start again: the display will show **OFF**.

2 , until the display will show **InFo**, Press the **enter (InFo)** key

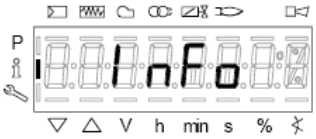

3 then il will show the first code (167) flashing, on the right side it will show the data entered. By pressing **+** or **-** it is possible to scroll (up or down) the parameter list.

4 If a dot-line is shown on the right, there is no enough room for complete visualisation: press **enter** again the data will be completely shown for 1 to 3 seconds. By pressing **enter** or **+** and**-** at the same time, the system will exit the parameter visualisation and go back to the flashing number.The **Info** level shows some basic parameters as:

Parameter	***Description***
167	Cubic meters of fule (resettable)
162	Operating hours (resettable)
163	Device operating hours
164	Burners start-ups (resettable)
166	Total number of start-ups
113	Burner number (i.e. serial number)
107	Software version
102	Software date
103	Device serial number
104	Customer code
105	Version
143	Free

5 Example: choose parameter 102 to show the date

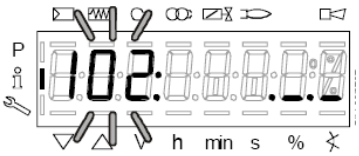

the display shows parameter **102** flashing on the left and characters **._._** on the right.

6 press InFo for 1-3 seconds: the date will appear

7 press InFo to go back to parameter “102”

8 by pressing + / -, it is possible to scroll up/down the parameter list (see table above), or, by pressing ESC or InFo for more seconds, the display will show

9 Once the last parameter is accessed (143) by pressing **+** , the **End** message will flash.

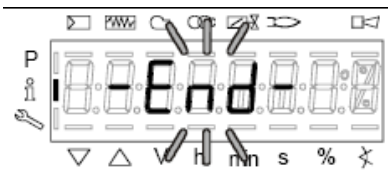

10 Press **InFo** for more than three seconds or for more than three seconds orto return to the normal display.

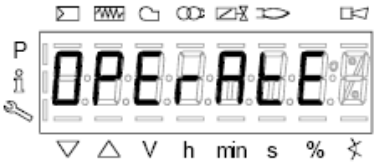

If a message like the one below is shown during operation,

it means that the burner is locked out and the Errore code is shown (in the example “error code:4”); this message is alternating with another message

Diagnostic code (in the example “diagnostic code:3”). Record the codes and find out the fault in the Error table
To perform the reset, press InFo for one second:

The unit displays an event which does not lead to shutdown.
The display shows current error code **c:** alternating with diagnostic code **d**:

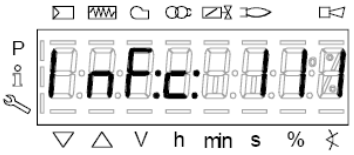

.
Press **InFo** to return to the display of phases.
Example: Error code **111** / diagnostic code 0

To reset, press InFo for a second. Record the codes and check the Error List to find the type of faults.

Service level

To enter the Service mode, press InFo until the display will show:

The service level shows all the information about flame intensity, actuators position, number and lock codes:

Parameter	*Description*
954	Flame intensity
121	% output, if set = automatic operation
922	Actuators position, 00=combustibile; 01= aria
161	Lock-outs number
701..725	Lock-outs History (see chapter 23 in the LMV2x manual)

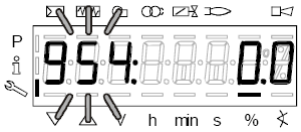

1 the first parameter will be “954”: the percentage of flame is shown on the right. By pressinf + or - it is possible to scroll up/down the parameter list.

2 Once the last parameter is accessed (143) by pressing **+** , the **End** message will blink.

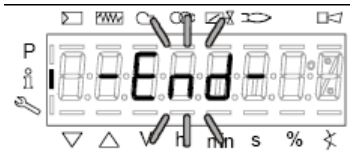

3 Press **InFo** for more than three seconds or for more than three seconds orto return to the normal display.

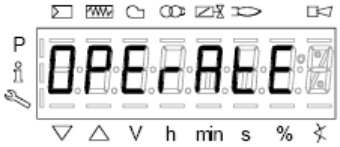

PHASES LIST

Fase /Phase	Funzione	Function
Ph00	Fase blocco	Lockout phase
Ph01	Fase di sicurezza	Safety phase
Ph10	t10 = tempo raggiungimento posizione riposo	t10 = home run
Ph12	Pausa	Standby (stationary)
Ph22	t22 = tempo di salita ventilatore (motore ventilatore = ON, valvola intercettazione di sicurezza = ON)	t22 = fan ramp up time (fan motor = ON, safety shutoff valve = ON)
Ph24	Verso posizione preventilazione	Traveling to the prepurge position
Ph30	t1 = tempo preventilazione	t1 = prepurge time
Ph36	Verso posizione accensione	Traveling to the ignition position
Ph38	t3 = tempo preaccensione	t3 = preignition time
Ph40	TSA1 = primo tempo sicurezza (trasformatore accensione ON)	TSA1= 1st safety time (ignition transformer ON)
Ph42	TSA1 = primo tempo sicurezza (trasformatore accensione OFF)	TSA1 = 1st safety time (ignition transformer OFF), t42 = preignition time OFF
Ph44	t44 = intervallo 1	t44 = interval 1
Ph50	TSA2 = secondo tempo sicurezza	TSA2 = 2nd safety time
Ph52	t52 = intervallo 2	t52 = interval 2
Ph60	Funzionamento 1 (stazionario)	Operation 1 (stationary)
Ph62	t62 = massimo tempo bassa fiamma (funzionamento 2, in preparazione per spegnimento, verso bassa fiamma)	t62 = max. time low-fire (operation 2, preparing for shutdown, traveling to low-fire)
Ph70	t13 = tempo postcombustione	t13 = afterburn time
Ph72	Verso posizione postcombustione	Traveling to the postpurge position
Ph74	t8 = tempo postventilazione	t8 = postpurge time
Ph80	t80 = tempo evacuazione controllo tenuta valvole	t80 = valve proving test evacuation time
Ph81	t81 = tempo perdita pressione atmosferica, prova atmosferica	t81 = leakage time test time atmospheric pressure, atmospheric test
Ph82	t82 = test perdita, test riempimento	t82 = leakage test filling test, filling
Ph83	t83 = tempo perdita pressione gas, test pressione	t83 = leakage test time gas pressure, pressure test
Ph90	Tempo attesa “mancanza gas”	Gas shortage waiting time

BACKUP PARAMETER WITH AZL2x

On the AZL2x you can save the configuration to download on another appliance LMV.

To do this:

access up, press **F** and **A** at the same time

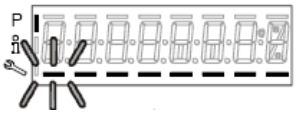

enter the password following the procedure on chapter “Programming LMV2x”.

Press ENTER until the display will show:

with the button go to the group **000** of the parameters and press ;with the buttons **+** and **-** go to **050** parameter

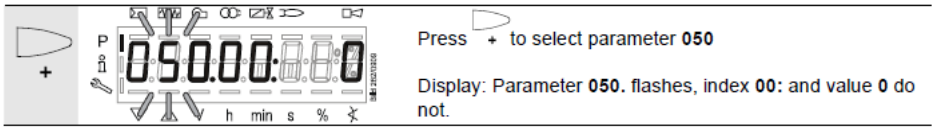

press the disply show

press again with the button **+** select **1** and start the backup process by pressing .

After about 5 seconds the backup process ends and the display shows 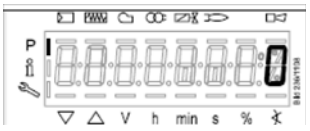

.

⚠	**It is recommended that you perform a backup procedure whenever you change the parameters of the LMV for having a copy in AZL2x**!

RESTORE PARAMETER FROM AZL2x TO LMV..

To copy the previously saved configuration on AZL2x proceed as follows:
access up, press **F** and **A** at the same time

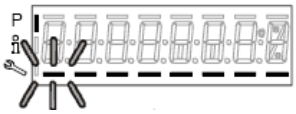

enter the password following the procedure on chapter “Programming LMV2x”.
Press ENTER until the display will show:

⚠	**To copy the configuration from AZL2x to LMV. It is important that the type of LMV is the same (for example LMV20 with LMV20, etc.) and that 113 "Burner ID" of the burner is the same value that is saved in the configuration you want to copy.**

With the buttons 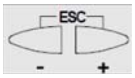 go to the group **100** of the parameters, press на 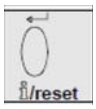 and always with the buttons **+** and **-** go to **113** parameter "Burner ID", press and verify (and/or change with buttons by pressing enter to confirm)

iWith the buttons 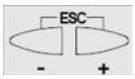 go to the group **000** of the parameters, press end select the **050** parameter

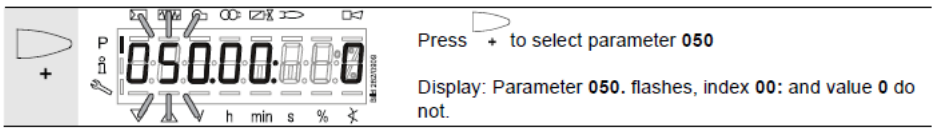

press the disply show

with the button 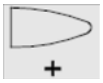 the display shows

press again with the button **+** select **1** and start the restore process by pressing .

After about 5 seconds the restore process ends and the display shows 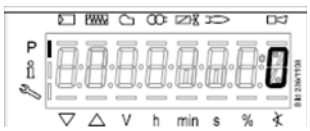 .
Now, LMV has the same configuration that was stored on AZL2x.

ERROR CODE TABLE

Error code	Diagnostic code	Meaning for the LMV2x/3x... system	Remedy
no Comm		**No communication between LMV26... basic unit and AZL2...**	Check wiring for line interruption/loose contact
2	**#**	**No flame at the end of safety time (TSA)**	
	1	*No flame at the end of safety time 1 (TSA1)*	
	2	*No flame at the end of safety time 2 (TSA2)*	
3	**#**	Air pressure failure	
	0	*Air pressure off*	
	1	*Air pressure on*	
	4	*Air pressure on – prevention of startup*	
	20	*Air pressure, combustion pressure – start prevention*	
	68	*Air pressure, POC – start prevention*	
	84	*Air pressure, combustion pressure, POC – start prevention*	
4	**#**	**Extraneous light**	
	0	*Extraneous light during startup*	
	1	*Extraneous light during shutdown*	
	2	*Extraneous light during startup – prevention of startup*	
	6	*Extraneous light during startup, air pressure – start prevention*	
	18	*Extraneous light during startup, combustion pressure – start prevention*	
	24	*Extraneous light during startup, air pressure, combustion pressure – start prevention*	
	66	*Extraneous light during startup, POC – start prevention*	
	70	*Extraneous light during startup, air pressure, POC – start prevention*	
	82	*Extraneous light during startup, combustion pressure, POC – start prevention*	
	86	*Extraneous light during startup, air pressure, combustion pressure, POC – start prevention*	
7	**#**	**Loss of flame**	
	0	*Loss of flame*	
	3...255	*Loss of flame due to TÜV test (loss-of-flame test)*	Diagnostics corresponds to the period of time from shutdown of fuel valves to the detection of loss of flame (resolution 0.2 s → Value 5 = 1 s)

Error code	Diagnostic code	Meaning for the LMV20... system	Remedy
12	**#**	**Valve proving**	
	0	*Fuel valve 1 (V1) leaking* *(fuel valve 2 with valve proving via X5-01)*	With valve proving via X5-01 (gas pressure switch-min) - Check if valve on the burner side is leaking - Check if pressure switch for valve proving is closed, if gas pressure exist - Check wiring for short-circuit
	1	*Fuel valve 2 (V2) leaking* *(fuel valve 1 with valve proving via X5-01)*	With valve proving via X5-01 (gas pressure switch-min) - Check if valve on the gas side is leaking - Check wiring for short-circuit
	2	*Valve proving not possible*	Valve proving activated, but pressure switch-min selected as input function for X9-04 (check parameters 238 and 241)
	3	*Valve proving not possible*	Valve proving activated, but no input assigned (check parameters 236 and 237)
	4	*Valve proving not possible*	Valve proving activated, but 2 inputs assigned (set parameter 237 to pressure switch-max or POC)
	5	*Valve proving not possible*	Valve proving activated, but 2 inputs assigned (check parameters 236 and 237)
	81	*V1 leaking*	Check to see if the valve on the gas side is leaking Check wiring to see if there is an open-circuit
	83	*V2 leaking*	Check to see if the valve on the burner side is leaking Check to see if the pressure switch for the leakage test is closed when gas pressure is present Check wiring for short-circuit
14	**#**	**POC**	
	0	*POC open*	Check to see if the valve's closing contact is closed
	1	*POC close*	Check wiring Check to see if the valve's closing contact opens when valve is controlled
	64	*POC open - start prevention*	Check wiring to see if there is a line interruption. Check to see if the valve's closing contact is closed
19	*80*	*Combustion pressure, POC – start prevention*	Check to see if pressure switch has closed with no combustion pressure present Check wiring for short-circuit
20	**#**	**Pressure switch-min (Pmin)**	
	0	*No minimum gas /oil pressure*	Check wiring for open-circuit
	1	*Gas shortage – start prevention*	Check wiring for open-circuit
21	**#**	**Pressure switch-max / POC**	
	0	*Pressure switch-max: Max. gas / oil pressure exceeded* *POC: POC open (software version ≤ V02.00)*	Check wiring to see if there is a line interruption. POC: Check to see if the valve's closing contact is closed.

Error code	Diagnostic code	Meaning for the LMV2x/3x... system	Remedy
22 OFF S	**#**	**Safety loop / burner flange**	
	0	*Safety loop / burner flange open*	
	1	*Safety loop / burner flange open - prevention of startup*	
	3	*Safety loop/burner flange, extraneous light – start prevention*	
	5	*Safety loop/burner flange, air pressure – start prevention*	
	17	*Safety loop/burner flange, combustion pressure – start prevention*	
	19	*Safety loop/burner flange, extraneous light, combustion pressure – start prevention*	
	21	*Safety loop/burner flange, air pressure, combustion pressure – start prevention*	
	23	*Safety loop/burner flange, extraneous light, air pressure, combustion pressure – start prevention*	
	65	*Safety loop/burner flange, POC – start prevention*	
	67	*Safety loop/burner flange, extraneous light, POC – start prevention*	
	69	*Safety loop/burner flange, air pressure, POC – start prevention*	
	71	*Safety loop/burner flange, extraneous light, air pressure, POC – start prevention*	
	81	*Safety loop/burner flange, combustion pressure, POC – start prevention*	
	83	*Safety loop/burner flange, extraneous light, combustion pressure, POC – start prevention*	
	85	*Safety loop/burner flange, air pressure, combustion pressure, POC – start prevention*	
	87	*Safety loop/burner flange, extraneous light, air pressure, combustion pressure, POC – start prevention*	
50	**#**	**Internal error**	Make a reset; if error occurs repeatedly, replace the unit
51	**#**	**Internal error**	Make a reset; if error occurs repeatedly, replace the unit
55	**#**	**Internal error**	Make a reset; if error occurs repeatedly, replace the unit
56	**#**	**Internal error**	Make a reset; if error occurs repeatedly, replace the unit
57	**#**	**Internal error**	Make a reset; if error occurs repeatedly, replace the unit

Error code	Diagnostic code	Meaning for the LMV2x/3x... system	Remedy
58	**#**	**Internal error**	Make a reset; if error occurs repeatedly, replace the unit
61 Fuel Chg	**#**	**Fuel changeover**	
Fuel Chg	*0*	*Fuel 0*	No error - change to Fuel 0
Fuel Chg	*1*	*Fuel 1*	No error - change to Fuel 1
62 Fuel Err	**#**	**Invalid fuel signals / fuel information**	
Fuel Err	*0*	*Invalid fuel selection (Fuel 0 + 1 = 0)*	Check wiring to see if there is an open-circuit Note Curves cannot be set.
Fuel Err	*1*	*Different fuel selection between the µCs*	Make a reset; if error occurs repeatedly, replace the unit
Fuel Err	*2*	*Different fuel signals between the µCs*	Make a reset; if error occurs repeatedly, replace the unit
Fuel Err	*3*	*Invalid fuel selection (Fuel 0 + 1 = 1)*	Check wiring for short-circuit Note Curves cannot be set. LMV26...: Optional press reset button >3 seconds.
65	**#**	**Internal error**	Make a reset; if error occurs repeatedly, replace the unit
66	**#**	**Internal error**	Make a reset; if error occurs repeatedly, replace the unit
67	**#**	**Internal error**	Make a reset; if error occurs repeatedly, replace the unit
70	**#**	**Internal error fuel-air ratio control: Position calculation modulating**	
	23	*Output invalid*	No valid output
	26	*Curvepoints undefined*	Adjust the curvepoints for all actuators
71	**#**	**Special position undefined**	
	0	*Home position*	Parameterize the home position for all actuators used
	1	*Prepurge position*	Parameterize the prepurge position for all actuators used
	2	*Postpurge position*	Parameterize the postpurge position for all actuators used
	3	*Ignition position*	Parameterize the ignition position for all actuators used
72	**#**	**Internal error fuel-air ratio control**	Make a reset; if error occurs repeatedly, replace the unit
73	**#**	**Internal error fuel-air ratio control: Position calculation multistep**	
	23	*Output invalid*	No valid output
	26	*Curvepoints undefined*	Adjust the curvepoints for all actuators

Error code	Diagnostic code	Meaning for the LMV2x/3x... system	Remedy
75	**#**	**Internal error fuel-air ratio control: Data clocking check**	
	1	*Current output different*	
	2	*Target output different*	
	4	*Target positions different*	
	16	*Different positions reached*	Can be caused by different standardized speeds (e.g. after restore of data set) when the VSD is activated → standardize again and check adjustment of the fuel-air ratio control system
76	**#**	**Internal error fuel-air ratio control**	Make a reset; if error occurs repeatedly, replace the unit
80	**#**	**Control range limitation of VSD**	Basic unit could not correct the difference in speed and reached a control range limit. 1. Basic unit is not standardized for this motor → repeat standardization. **Caution!** **Settings of fuel-air ratio control must be checked.** 2. Ramp time settings of the VSD are not shorter than those of the basic unit (parameters 522, 523). 3. Characteristic of the VSD is not linear. Configuration of the voltage input at the VSD must accord with that of the basic unit (parameter 645). 4. VSD does not follow quickly enough the changes of the basic unit. Check settings of the VSD (input filter, slippage compensation, hiding different speeds)
	1	*Control range limitation at the bottom*	VSD speed was too high
	2	*Control range limitation at the top*	VSD speed was too low
81	*1*	*Interrupt limitation speed input*	Too much electromagnetic interference on the sensor line → improve EMC

Error code	Diagnostic code	Meaning for the LMV2x/3x... system	Remedy
82	**#**	**Error during VSD's speed standardization**	
	1	*Timeout of standardization (VSD ramp down time too long)*	Timeout at the end of standardization during ramp down of the VSD → ramp time settings of the VSD are not shorter than those of the basic unit (parameter: 523)
	2	*Storage of standardized speed not successful*	Error during storage of the standardized speed → lock the basic unit, then reset it and repeat the standardization
	3	*Line interruption speed sensor*	Basic unit receives no pulses from the speed sensor: 1. Motor does not turn. 2. Speed sensor is not connected. 3. Speed sensor is not activated by the sensor disk (check distance)
	4	*Speed variation / VSD ramp up time too long / speed below minimum limit for standardization*	Motor has not reached a stable speed after ramp up. 1. Ramp time settings of the VSD are not shorter than those of the basic unit (parameters 522, 523). 2. Characteristic of the VSD is not linear. Configuration of the voltage input at the VSD must accord with that of the basic unit (parameter 645). 3. VSD does not follow quickly enough the changes of the basic unit. Check settings of the VSD (input filter, slippage compensation, hiding different speeds) 4. Speed of VSD lies below the minimum for standardization (650 1/min)
	5	*Wrong direction of rotation*	Motor's direction of rotation is wrong. 1. Motor turns indeed in the wrong direction → change parameterization of the direction of rotation or interchange 2 live conductors. 2. Sensor disk is fitted the wrong way → turn the sensor disk.
	6	*Unplausible sensor signals*	The required pulse pattern (60°, 120°, 180°) has not been correctly identified. 1. Speed sensor does not detect all tappets of the sensor disk → check distance 2. As the motor turns, other metal parts are detected also, in addition to the tappets → improve mounting. 3. Electromagnetic interference on the sensor lines → check cable routing, improve EMC
	7	*Invalid standardized speed*	The standardized speed measured does not lie in the permissible range → motor turns too slowly or too fast
	15	*Speed deviation µC1 + µC2*	The speeds of microcomputer 1 and 2 deviated too much. This can be caused by wrong standardized speeds (e.g. after restoring a data set to a new unit) → repeat standardization and check the fuel-air ratio

Error code	Diagnostic code	Meaning for the LMV2x/3x... system	Remedy
	20	*Wrong phase of phase manager*	Standardization was made in a wrong phase. Permitted are only phases ≤12 → controller OFF, start standardization again
	21	*Safety loop / burner flange open*	Safety loop or burner flange is open → repeat standardization with safety loop closed
	22	*Air actuator not referenced*	Air actuator has not been referenced or has lost its referencing. 1. Check if the reference position can be approached. 2. Check if actuators have been mixed up. 3. If error only occurs after the start of standardization, the actuator might be overloaded and cannot reach its destination.
	23	*VSD deactivated*	Standardization was started with VSD deactivated → activate the VSD and repeat standardization
	24	*No valid operating mode*	Standardization was started without valid operating mode → activate valid operating mode and repeat standardization
	25	*Pneumatic air-fuel ratio control*	Standardization was started with pneumatic air-fuel ratio control → standardization with pneumatic air-fuel ratio control not possible
	128	*Running command with no preceding standardization*	VSD is controlled but not standardized → make standardization
	255	*No standardized speed available*	Motor turns but is not standardized → make standardization

Error code	Diagnostic code	Meaning for the LMV2x/3x... system	Remedy
83	**#**	**Speed error VSD**	Required speed has not been reached
	Bit 0 *Valency 1*	*Lower control range limitation of control*	Speed has not been reached because control range limitation has become active → for measures, refer to error code 80
	Bit 1 *Valency 2...3*	*Upper control range limitation of control*	Speed has not been reached because control range limitation has become active → for measures, refer to error code 80
	Bit 2 *Valency 4...7*	*Interruption via disturbance pulses*	Speed has not been reached due to too much electromagnetic interference on the sensor line → for measures, refer to error code 81
	Bit 3 *Valency ≥ 8*	*Curve too steep in terms of ramp speed*	Speed has not been reached because detected curve slope was too steep. 1. With a LMV26... ramp of 20 s, the curve's slope may be a maximum of 10% speed change between 2 curvepoints in modulating mode. With a LMV26... ramp of 10 s, the curve's slope may be a maximum of 20% speed change between 2 curvepoints in modulating mode. With a LMV26... ramp of 5 s, the curve's slope may be a maximum of 40% speed change between 2 curvepoints in modulating mode. → Between the ignition point (P0) and the low-fire point (P1), the speed change in modulating mode may be a maximum of 40%, independent of the LMV26... ramp. 2. The setting of the VSD ramp must be about 20% faster than the ramps in the basic unit (parameters 522, 523).
	Bit 4 *Valency ≥ 16*	*Interruption of speed signal*	No speed detected in spite of control. 1. Check if the motor turns. 2. Check if the speed sensor delivers a signal (LED / check distance from the sensor disk). 3. Check wiring of the VSD.
	Bit 5 *Valency ≥ 32*	*Quick shutdown due to excessive speed deviation*	Speed deviation was for about 1 s >10% outside the anticipated range. 1. Check ramp times of the LMV26... and VSD. 2. Check wiring of the VSD.

Error code	Diagnostic code	Meaning for the LMV2x/3x... system	Remedy
84	**#**	**Curve slope actuators**	
	Bit 0 *Valency 1*	*VSD: Curve too steep in terms of ramp speed*	1. The curve's slope may be a maximum of 10% speed change between 2 curvepoints in modulating operation, with a LMV26... ramp of 20 seconds The curve's slope may be a maximum of 20% speed change between 2 curvepoints in modulating operation, with a LMV26... ramp of 10 seconds The curve's slope may be a maximum of 40% speed change between 2 curvepoints in modulating operation, with a LMV26... ramp of 5 seconds → Between the ignition point (P0) and the low-fire point (P1), the speed change in modulating mode may be a maximum of 40%, independent of the LMV26... ramp. 2. Setting of the VSD ramp must be about 20% shorter than the ramps in the basic unit (parameters 522 and 523)
	Bit 1 *Valency 2..3*	*Fuel actuator: Curve too steep in terms of ramp rate*	The slope of the curve may be a maximum position change of 31° between 2 curvepoints in modulating mode
	Bit 2 *Valency 4..7*	*Air actuator: Curve too steep in terms of ramp rate*	The slope of the curve may be a maximum position change of 31° between 2 curvepoints in modulating mode
85	**#**	*Referencing error ones actuators*	
	0	*Referencing error of fuel actuator*	Referencing of fuel actuator not successful. Reference point could not be reached. 1. Check to see if actuators have been mixed up. 2. Check to see if actuator is locked or overloaded.
	1	*Referencing error of air actuator*	Referencing of fuel actuator not successful Reference point could not be reached. 1. Check to see if actuators have been mixed up. 2. Check to see if actuator is locked or overloaded.
	Bit 7 *Valency ≥ 128*	*Referencing error due to parameter change*	Parameterization of an actuator (e.g. the reference position) has been changed. To trigger new referencing, this error is set
86	**#**	**Error fuel actuator**	
	0	*Position error*	Target position could not be reached within the required tolerance band → check to see if actuator is locked or overloaded
	Bit 0 *Valency 1*	*Line interruption*	*Line interruption* detected at actuator's terminals → check wiring (voltage X54 across pin 5 or 6 and pin 2 >0.5 V)
	Bit 3 *Valency ≥8*	*Curve too steep in terms of ramp rate*	The slope of the curve may be a maximum position change of 31° between 2 curvepoints in modulating mode
	Bit 4 *Valency ≥ 16*	*Step deviation in comparison with last referencing*	Actuator was overloaded or mechanically twisted. 1. Check to see if the actuator is blocked somewhere along its working range. 2. Check to see if the torque is sufficient for the application.

Error code	Diagnostic code	Meaning for the LMV2x/3x... system	Remedy
87	**#**	**Error air actuator**	
	0	*Position error*	Target position could not be reached within the required tolerance band → check to see if actuator is locked or overloaded
	Bit 0 *Valency 1*	*Line interruption*	Line interruption detected at actuator's terminals → check wiring (voltage X53 across pin 5 or 6 and pin 2 >0.5 V)
	Bit 3 *Valency ≥ 8*	*Curve too steep in terms of ramp rate*	The slope of the curve may be a maximum position change of 31° between 2 curvepoints in modulating mode
	Bit 4 *Valency ≥ 16*	*Sectional deviation in comparison with last referencing*	Actuator was overloaded or mechanically twisted. 1. Check to see if the actuator is blocked somewhere along its working range. 2. Check to see if the torque is sufficient for the application.
90	**#**	**Internal error basic unit**	
91	**#**	**Internal error basic unit**	
93	**#**	**Error flame signal acquisition**	
	3	*Short-circuit of sensor*	Short-circuit at QRB... 1. Check wiring. 2. Flame detector possibly fault.
95	**#**	**Error relay supervision**	
	3 Ignition transformer *4 Fuel valve 1* *5 Fuel valve 2* *6 Fuel valve 3*	*External power supply NO contact*	Check wiring
96	**#**	**Error relay supervision**	
	3 Ignition transformer *4 Fuel valve 1* *5 Fuel valve 2* *6 Fuel valve 3*	*Relay contacts have welded*	Test the contacts: 1. Unit connected to power: Fan output must be dead. 2. Disconnect power: Disconnect fan. No resistive connection between fan output and neutral conductor allowed. If one of the 2 tests fails, release the unit since contact have definitively welded and safety can no longer be ensured.
97	**#**	**Error relay supervision**	
	0	*Safety relay contacts have welded or external power supply fed to safety relay*	Test the contacts: 1. Unit connected to power: Fan output must be dead. 2. Disconnect power: Disconnect fan. No resistive connection between fan output and neutral conductor allowed. If one of the 2 tests fails, release the unit since contacts have definitively welded and safety can no longer be ensured.

Error code	Diagnostic code	Meaning for the LMV2x/3x... system	Remedy
98	**#**	**Error relay supervision**	
	2 Safety valve *3 Ignition transformer* *4 Fuel valve 1* *5 Fuel valve 2* *6 Fuel valve 3*	*Relay does not pull in*	Make a reset; if error occurs repeatedly, replace the unit
99	**#**	**Internal error relay control**	Make a reset; if error occurs repeatedly, replace the unit
	3	*Internal error relay control*	Make a reset. If error occurs repeatedly, replace the unit Software version V03.10: If error C:99 D:3 occurs during standardization of the VSD, deactivate temporarily function *Alarm in case of start prevention* (parameter number 210 = 0, when using a release contact) or *interrupt* the controller-ON signal
100	**#**	**Internal error relay control**	Make a reset; if error occurs repeatedly, replace the unit
105	**#**	**Internal error contact sampling**	
	0 Pressure switch-min *1 Pressure switch-max / POC* *2 Fuel selection 0 / Reset* *3 Air pressure* *4 Load controller open* *5 Load controller on / off* *6 Load controller close* *7 Safety loop / Burner flange* *8 Safety valve* *9 Ignition transformer* *10 Fuel valve 1* *11 Fuel valve 2* *12 Fuel valve 3* *13 Fuel selection 1 / Reset*	*Stuck-At failure*	Can be caused by capacitive loads or supply of DC voltage to the mains voltage inputs. The diagnostic code indicates the input where the problem occurred
106	**#**	**Internal error contact request**	Make a reset; if error occurs repeatedly, replace the unit
107	**#**	**Internal error contact request**	Make a reset; if error occurs repeatedly, replace the unit
108	**#**	**Internal error contact request**	Make a reset; if error occurs repeatedly, replace the unit
110	**#**	**Internal error voltage monitor test**	Make a reset; if error occurs repeatedly, replace the unit
111	**#**	**Power failure**	Mains voltage to low Exchange ratio diagnostics code → voltage value (230 V: 1.683)
112	*0*	*Mains voltage recovery*	Error code for triggering a reset on power restoration (no error)
113	**#**	**Internal error mains voltage supervision**	Make a reset; if error occurs repeatedly, replace the unit
115	**#**	**Internal error system counter**	
116	*0*	*Designed life time exceeded (250´000 startups)*	Warning threshold has been reached. The unit should be replaced

Error code	Diagnostic code	Meaning for the LMV2x/3x... system	Remedy
117	*0*	*Life time exceeded* *Operation no longer allowed*	Switch-off threshold has been reached
120	*0*	*Interrupt limitation fuel meter input*	Too many disturbance pulses at the fuel meters input → Improve EMC
121	**#**	**Internal error EEPROM access**	Make a reset, repeat last parameterization / check. Restore the parameter set, if error occurs repeatedly, replace the unit
122	**#**	**Internal error EEPROM access**	Make a reset, repeat last parameterization / check. Restore the parameter set, if error occurs repeatedly, replace the unit
123	**#**	**Internal error EEPROM access**	Make a reset, repeat last parameterization / check. Restore the parameter set, if error occurs repeatedly, replace the unit
124	**#**	**Internal error EEPROM access**	Make a reset, repeat last parameterization / check. Restore the parameter set, if error occurs repeatedly, replace the unit
125	**#**	**Internal error EEPROM read access**	Make a reset, repeat last parameterization / check. If error occurs repeatedly, replace the unit
126	**#**	**Internal error EEPROM write access**	Make a reset, repeat last parameterization / check. If error occurs repeatedly, replace the unit
127	**#**	**Internal error EEPROM access**	Make a reset, repeat last parameterization / check. Restore the parameter set, if error occurs repeatedly, replace the unit
128	*0*	*Internal error EEPROM access - synchronization during initialization*	Make a reset; if error occurs repeatedly, replace the unit
129	**#**	**Internal error EEPROM access – command synchronization**	Make a reset, repeat last parameterization / check. If error occurs repeatedly, replace the unit
130	**#**	**Internal error EEPROM access - timeout**	Make a reset, repeat last parameterization / check. If error occurs repeatedly, replace the unit
131	**#**	**Internal error EEPROM access - page on abort**	Make a reset, repeat last parameterization / check. If error occurs repeatedly, replace the unit
132	**#**	**Internal error EEPROM register initialization**	Make a reset; if error occurs repeatedly, replace the unit
133	**#**	**Internal error EEPROM access – Request synchronization**	Make a reset, repeat last parameterization / check. If error occurs repeatedly, replace the unit
134	**#**	**Internal error EEPROM access – Request synchronization**	Make a reset, repeat last parameterization / check. If error occurs repeatedly, replace the unit
135	**#**	**Internal error EEPROM access – Request synchronization**	Make a reset, repeat last parameterization / check. If error occurs repeatedly, replace the unit
136	*1*	*Restore started*	Restore of a backup has been started (no error)

Error code	Diagnostic code	Meaning for the LMV2x/3x... system	Remedy
137	**#**	**Internal error – backup / restore**	
	157 (-99)	*Restore – ok, but backup < data set of current system*	Restore successful, but backup data record is smaller than in the current system
	239 (-17)	*Backup – storage of backup in AZL2... faulty*	Reset and repeat backup
	240 (-16)	*Restore – no backup in AZL2...*	No backup stored in AZL2...
	241 (-15)	*Restore – abortion due to unsuitable product no. (ASN)*	Backup has an unsuitable product no. (ASN) and must not be restored
	242 (-14)	*Backup – backup made is inconsistent*	Backup is faulty and cannot be transferred back
	243 (-13)	*Backup – data comparison between µCs faulty*	Reset and repeat backup
	244 (-12)	*Backup data are incompatible*	Backup data are incompatible with the current software version, restore not possible
	245 (-11)	*Access error to parameter Restore_Complete*	Reset and repeat backup
	246 (-10)	*Restore – timeout when storing in EEPROM*	Reset and repeat backup
	247 (-9)	*Data received are inconsistent*	Backup data record invalid, restore not possible
	248 (-8)	*Restore cannot at present be made*	Reset and repeat backup
	249 (-7)	*Restore – abortion due to unsuitable burner identification*	Backup has an unsuitable burner identification and must not be transferred to the unit
	250 (-6)	*Backup – CRC of one page is not correct*	Backup data record invalid, restore not possible
	251 (-5)	*Backup – burner identification is not defined*	Define burner identification and repeat backup
	252 (-4)	*After restore, pages still on ABORT*	Reset and repeat backup
	253 (-3)	*Restore cannot at present be made*	Reset and repeat backup
	254 (-2)	*Abortion due to transmission error*	Reset and repeat backup
	255 (-1)	*Abortion due to timeout during backup / restore*	Make a reset, check the connections and repeat backup / restore In case of repeated backup timeout, the AZL2... does not yet support backup functionality
146	**#**	**Timeout building automation interface**	Refer to Modbus User Documentation (A7541)
	1	*Modbus timeout*	
	2	*reserved*	

Error code	Diagnostic code	Meaning for the LMV2x/3x... system	Remedy
150	**#**	**TÜV test**	
	1 (-1)	*Invalid phase*	TÜV test may only be started in phase 60 (operation)
	2 (-2)	*TÜV test default output too low*	TÜV test default output must not be smaller than the lower output limit
	3 (-3)	*TÜV test default output too high*	TÜV test default output must not be greater than the upper output limit
	4 (-4)	*Manual interruption*	No error: Manual abortion of TÜV test by user
	5 (-5)	*TÜV test timeout*	No loss of flame after shutdown of fuel valves 1. Check to see if there is extraneous light 2. Check wiring to see if there is a short-circuit 3. Check to see if valve is leaking
165	**#**	**Internal error**	
166	*0*	*Internal error watchdog reset*	
167	**#**	**Manual locking**	Unit has been manually locked (no error)
	1	*Manual locking by contact*	
	2	*Manual locking by AZL2...*	
	3	*Manual locking by PC tool*	
	8	*Manual locking by the AZL2...* *Timeout / communication breakdown*	During a curve adjustment via the AZL2..., the timeout for menu operation has elapsed (setting via parameter 127), or communication between the LMV26... and the AZL2... has broken down
	9	*Manual locking by the PC tool* *Communication breakdown*	During a curve adjustment via the ACS410, communication between the LMV26... and the ACS410 was interrupted for more than 30 seconds
	33	*Manual locking by the PC tool* *Test of lockout*	PC tool made a reset attempt with an error-free system
168	**#**	**Internal error management**	Make a reset; if error occurs repeatedly, replace the unit
169	**#**	**Internal error management**	Make a reset; if error occurs repeatedly, replace the unit
170	**#**	**Internal error management**	Make a reset; if error occurs repeatedly, replace the unit
171	**#**	**Internal error management**	Make a reset; if error occurs repeatedly, replace the unit
200 OFF	**#**	**System error-free**	No error

Error code	Diagnostic code	Meaning for the LMV2x/3x... system	Remedy
201 OFF UPr0 or **OFF UPr1**	**#**	**Prevention of startup**	Start prevention due to unparameterized unit Go to error history, entry 702, for initial cause of the error with shutdown in connection with the first curve settings
	Bit 0 *Valency 1*	*No operating mode selected*	
	Bit 1 *Valency 2..3*	*No fuel train defined*	
	Bit 2 *Valency 4..7*	*No curves defined*	
	Bit 3 *Valency 8..15*	*Standardized speed undefined*	
	Bit 4 *Valency 16..31*	*Backup / restore was not possible*	
202	**#**	**Internal error operating mode selection**	Redefine the operating mode (parameter 201)
203	**#**	**Internal error**	Redefine the operating mode (parameter 201). Make a reset; if error occurs repeatedly, replace the unit
204	**Phase number**	**Program stop**	Program stop is active (no error)
205	**#**	**Internal error**	Make a reset; if error occurs repeatedly, replace the unit
206	*0*	*Inadmissible combination of units* *(basic unit – AZL2...)*	
207	**#**	**Version compatibility basic unit – AZL2...**	
	0	*Basic unit version too old*	
	1	*AZL2... version too old*	
208	**#**	**Internal error**	Make a reset; if error occurs repeatedly, replace the unit
209	**#**	**Internal error**	Make a reset; if error occurs repeatedly, replace the unit
210	*0*	*Selected operating mode is not released for the basic unit*	Select a released operating mode for the basic unit
240	**#**	**Internal error**	Make a reset; if error occurs repeatedly, replace the unit
245	**#**	**Internal error**	Make a reset; if error occurs repeatedly, replace the unit
250	**#**	**Internal error**	Make a reset; if error occurs repeatedly, replace the unit

WIRING DIAGRAM

Wiring connection for LMV20

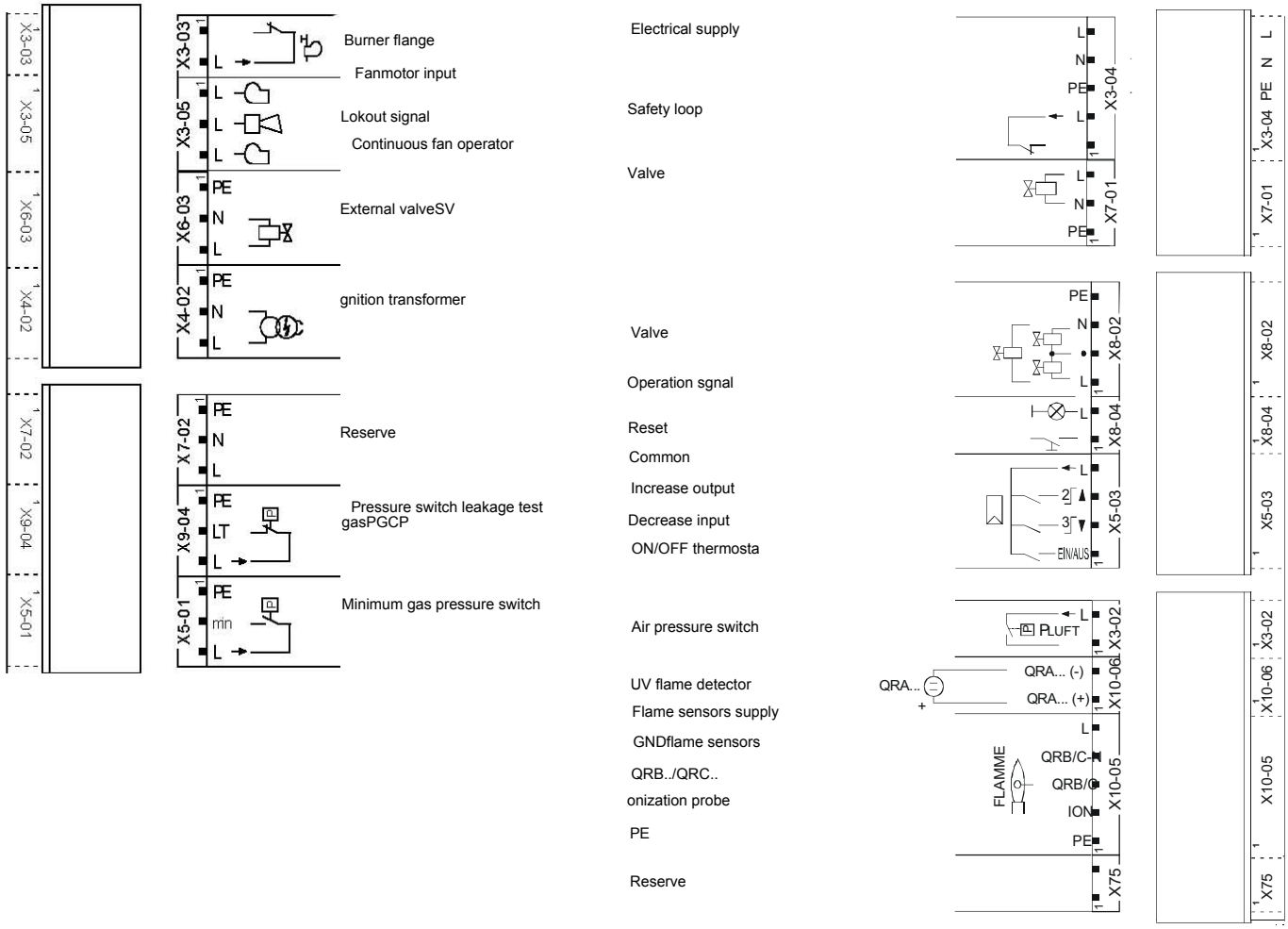

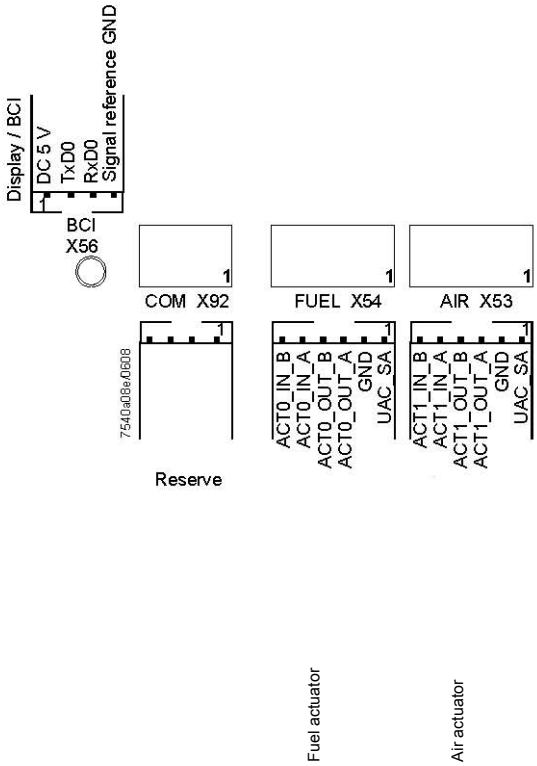

Wiring variants for LMV27

ConnectorX75

2 - Fuel meter input

1 - Supply fuel meter

ConnectorX5-02

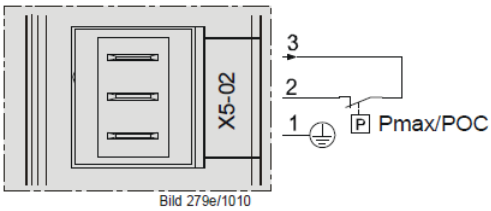

ConnectionsPmax

Wiring variants for LMV26

ConnectorX08-04 / X09-04

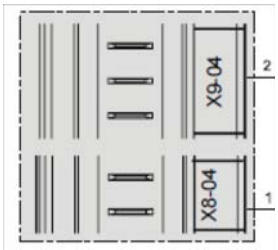

2 - Fuel 0

1 - Fuel1

ConnectorX75

2 - Fuel meter input

1 - Supply fuel meter

ConnectorX64

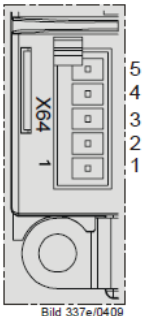

5 -Power supply speed sensor

4 -Speed sensor input

3 - PWM (Pulse Width Modulation) speed output

2 - GND (signal reference)

1 -Controller input (4÷20mA)

ConnectorX74

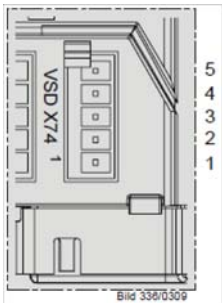

5 -Supply

4 -Feedback signal

3 - PWM (Pulse Width Modulation) speed output

2 - GND (signal reference)

1 -External supply 24V DC

Wiring variants for LMV37

ConnectorX75

2 - Fuel meter input

1 - Supply fuel meter

ConnectorX5-02

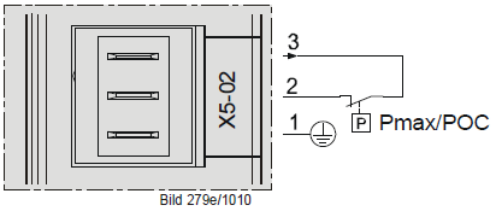

Connections Pmax

ConnectorX64

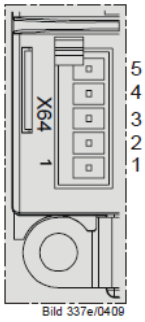

5 -Power supply speed sensor

4 -Speed sensor input

3 - PWM (Pulse Width Modulation) speed output

2 - GND (signal reference)

1 -Controller input (4÷20mA)

ConnectorX74

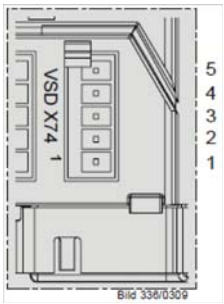

5 -Supply

4 -Feedback signal

3 - PWM (Pulse Width Modulation) speed output

2 - GND (signal reference)

1 -External supply 24V DC

C.I.B. UNIGAS S.p.A.
Via L.Galvani, 9 - 35011 Campodarsego (PD) - ITALY
Tel. +39 049 9200944 - Fax +39 049 9200945/9201269
web site: www.cibunigas.it - e-mail: cibunigas@cibunigas.it

Note: Specifications and and data subject to change. Errors and omissions excepted.