PG60
PG70
PG81

Light oil/Biodiesel double-stage burners

Versions with:
- 12VDC voltage supply
- oleo-static driven fan motor

MANUAL OF INSTALLATION - USE - MAINTENANCE

CIB UNIGAS

BURNERS - BRUCIATORI - BRULERS - BRENNER - QUEMADORES - ГОРЕЛКИ

M039356CB Rev. 1 05/2008

TABLE OF CONTENTS

WARNINGS **3**

PART I: INSTALLATION **5**

Burner model identification *5*
Technical specifications *5*
Overall dimensions *6*
Performance curves *6*

MOUNTINGS AND CONNECTIONS 7
Packing *7*
Handling the burner *7*
Hydraulic diagrams for light oil supplying circuits *8*
Installation diagram of light oil pipes *9*
Determining the diameter of oil supply pipes *10*
About the use of fuel pumps *11*
Oil pumps *12*
Connecting the light oil flexible hoses *13*
Electrical connections *13*

ADJUSTMENTS 14
Priming the pump *14*
Oil rate setting *14*
Hydraulic scheme - operating principle *16*
Hydraulic circuit - components arrangement *17*
Air adjustment *17*
Combustion head adjustment *18*

PART II: OPERATION **19**

OPERATION 19

PART III: MAINTENANCE **20**

ROUTINE MAINTENANCE 20
Removing the combustion head *20*
.Correct position of electrodes and combustion head *21*
Checking the flame signal *21*

TROUBLESHOOTING 22

SPARE PARTS 23

BURNER EXPLODED VIEW 24

ELECTRICAL WIRING DIAGRAMS 26

WARNINGS

THIS MANUAL IS SUPPLIED AS AN INTEGRAL AND ESSENTIAL PART OF THE PRODUCT AND MUST BE DELIVERED TO THE USER.

INFORMATION INCLUDED IN THIS SECTION ARE DEDICATED BOTH TO THE USER AND TO PERSONNEL FOLLOWING PRODUCT INSTALLATION AND MAINTENANCE.

THE USER WILL FIND FURTHER INFORMATION ABOUT OPERATING AND USE RESTRICTIONS, IN THE SECOND SECTION OF THIS MANUAL. WE HIGHLY RECOMMEND TO READ IT.

CAREFULLY KEEP THIS MANUAL FOR FUTURE REFERENCE..

1) GENERAL INTRODUCTION

- The equipment must be installed in compliance with the regulations in force, following the manufacturer's instructions, by qualified personnel.
- Qualified personnel means those having technical knowledge in the field of components for civil or industrial heating systems, sanitary hot water generation and particularly service centres authorised by the manufacturer.
- Improper installation may cause injury to people and animals, or damage to property, for which the manufacturer cannot be held liable.
- Remove all packaging material and inspect the equipment for integrity.

In case of any doubt, do not use the unit - contact the supplier.

The packaging materials (wooden crate, nails, fastening devices, plastic bags, foamed polystyrene, etc), should not be left within the reach of children, as they may prove harmful.

- Before any cleaning or servicing operation, disconnect the unit from the mains by turning the master switch OFF, and/or through the cut-out devices that are provided.
- Make sure that inlet or exhaust grilles are unobstructed.
- In case of breakdown and/or defective unit operation, disconnect the unit. Make no attempt to repair the unit or take any direct action.

Contact qualified personnel only.

Units shall be repaired exclusively by a servicing centre, duly authorised by the manufacturer, with original spare parts.

Failure to comply with the above instructions is likely to impair the unit's safety.

To ensure equipment efficiency and proper operation, it is essential that maintenance operations are performed by qualified personnel at regular intervals, following the manufacturer's instructions.

- When a decision is made to discontinue the use of the equipment, those parts likely to constitute sources of danger shall be made harmless.
- In case the equipment is to be sold or transferred to another user, or in case the original user should move and leave the unit behind, make sure that these instructions accompany the equipment at all times so that they can be consulted by the new owner and/or the installer.
- For all the units that have been modified or have options fitted then original accessory equipment only shall be used.
- This unit shall be employed exclusively for the use for which it is meant. Any other use shall be considered as improper and, therefore, dangerous.

The manufacturer shall not be held liable, by agreement or otherwise, for damages resulting from improper installation, use and failure to comply with the instructions supplied by the manufacturer.

2) SPECIAL INSTRUCTIONS FOR BURNERS

- The burner should be installed in a suitable room, with ventilation openings complying with the requirements of the regulations in force, and sufficient for good combustion.
- Only burners designed according to the regulations in force should be used.
- This burner should be employed exclusively for the use for which it was designed.
- Before connecting the burner, make sure that the unit rating is the same as delivery mains (electricity, gas oil, or other fuel).
- Observe caution with hot burner components. These are, usually, near to the flame and the fuel pre-heating system, they become hot during the unit operation and will remain hot for some time after the burner has stopped.

When the decision is made to discontinue the use of the burner, the user shall have qualified personnel carry out the following operations:

a Remove the power supply by disconnecting the power cord from the mains.

b) Disconnect the fuel supply by means of the hand-operated shut-off valve and remove the control handwheels from their spindles.

Special warnings

- Make sure that the burner has, on installation, been firmly secured to the appliance, so that the flame is generated inside the appliance firebox.
- Before the burner is started and, thereafter, at least once a year, have qualified personnel perform the following operations:

a set the burner fuel flow rate depending on the heat input of the appliance;

b set the flow rate of the combustion-supporting air to obtain a combustion efficiency level at least equal to the lower level required by the regulations in force;

c check the unit operation for proper combustion, to avoid any harmful or polluting unburnt gases in excess of the limits permitted by the regulations in force;

d make sure that control and safety devices are operating properly;

e make sure that exhaust ducts intended to discharge the products of combustion are operating properly;

f on completion of setting and adjustment operations, make sure that all mechanical locking devices of controls have been duly tightened;

g make sure that a copy of the burner use and maintenance instructions is available in the boiler room.

- In case of a burner shut-down, reser the control box by means of the RESET pushbutton. If a second shut-down takes place, call the Technical Service, **without trying to RESET further**.
- The unit shall be operated and serviced by qualified personnel only, in compliance with the regulations in force.

3) GENERAL INSTRUCTIONS DEPENDING ON FUEL USED

3a) ELECTRICAL CONNECTION

- For safety reasons the unit must be efficiently earthed and installed as required by current safety regulations.
- It is vital that all saftey requirements are met. In case of any doubt, ask for an accurate inspection of electrics by qualified personnel, since the manufacturer cannot be held liable for damages that may be caused by failure to correctly earth the equipment.
- Qualified personnel must inspect the system to make sure that it is adequate to take the maximum power used by the equipment shown on the equipment rating plate. In particular, make sure that the system cable cross section is adequate for the power absorbed by the unit.
- No adaptors, multiple outlet sockets and/or extension cables are permitted to connect the unit to the electric mains.
- An omnipolar switch shall be provided for connection to mains, as required by the current safety regulations.
- The use of any power-operated component implies observance of a few basic rules, for example:
  - do not touch the unit with wet or damp parts of the body and/or with bare feet;
  - do not pull electric cables;
  - do not leave the equipment exposed to weather (rain, sun, etc.) unless expressly required to do so;
  - do not allow children or inexperienced persons to use equipment;
- The unit input cable shall not be replaced by the user.

In case of damage to the cable, switch off the unit and contact qualified personnel to replace.

When the unit is out of use for some time the electric switch supplying all the power-driven components in the system (i.e. pumps, burner, etc.) should be switched off.

3b) FIRING WITH GAS, LIGHT OIL OR OTHER FUELS

GENERAL

- The burner shall be installed by qualified personnel and in compliance with regulations and provisions in force; wrong installation can cause injuries to people and animals, or damage to property, for which the manufacturer cannot be held liable.
- Before installation, it is recommended that all the fuel supply system pipes be carefully cleaned inside, to remove foreign matter that might impair the burner operation.
- Before the burner is commissioned, qualified personnel should inspect the following:

a the fuel supply system, for proper sealing;

b the fuel flow rate, to make sure that it has been set based on the firing rate required of the burner;

c the burner firing system, to make sure that it is supplied for the designed fuel type;

d the fuel supply pressure, to make sure that it is included in the range shown on the rating plate;

e the fuel supply system, to make sure that the system dimensions are adequate to the burner firing rate, and that the system is equipped with all the safety and control devices required by the regulations in force.

- When the burner is to remain idle for some time, the fuel supply tap or taps should be closed.

SPECIAL INSTRUCTIONS FOR USING GAS

Have qualified personnel inspect the installation to ensure that:

a the gas delivery line and train are in compliance with the regulations and provisions in force;

b all gas connections are tight;

c the boiler room ventilation openings are such that they ensure the air supply flow required by the current regulations, and in any case are sufficient for proper combustion.

- Do not use gas pipes to earth electrical equipment.
- Never leave the burner connected when not in use. Always shut the gas valve off.
- In case of prolonged absence of the user, the main gas delivery valve to the burner should be shut off.

Precautions if you can smell gas

a do not operate electric switches, the telephone, or any other item likely to generate sparks;

b immediately open doors and windows to create an air flow to purge the room;

c close the gas valves;

d contact qualified personnel.

- Do not obstruct the ventilation openings of the room where gas appliances are installed, to avoid dangerous conditions such as the development of toxic or explosive mixtures.

DIRECTIVES AND STANDARDS

Gas burners

European directives:

- Directive 90/396/CEE - Gas Appliances;
- Directive 2006/95/EC on low voltage;
- Directive 2004/108/CEE on electromagnetic compatibility

Harmonised standards :

-UNI EN 676 (Gas Burners;

-CEI EN 60335-1(Household and similar electrical appliances - Safety. Part 1: General requirements;

- EN 50165 (Electrical equipment of non-electric appliances for household and similar purposes. Safety requirements.

Light oil burners

European directives:

- Directive 2006/95/EC on low voltage;
- Directive 2004/108/CEE on electromagnetic compatibility

Harmonised standards :

-CEI EN 60335-1(Household and similar electrical appliances - Safety. Part 1: General requirements;

- EN 50165 (Electrical equipment of non-electric appliances for household and similar purposes. Safety requirements.

National standards :

-UNI 7824: Monobloc nebulizer burners for liquid fuels. Characteristics and test methods

Heavy oil burners

European directives:

- Directive 2006/95/EC on low voltage;
- Directive 2004/108/CEE on electromagnetic compatibility

Harmonised standards :

-CEI EN 60335-1 Household and similar electrical appliances - SafetyPart 1: General requirements;

- EN 50165 Electrical equipment of non-electric appliances for household and similar purposes. Safety requirements.

National standards :

-UNI 7824: Monobloc nebulizer burners for liquid fuels. Characteristics and test methods

Gas - Light oil burners

European directives:

- Directive 90/396/CEE Gas Appliances;
- Directive 2006/95/EC on low voltage;
- Directive 2004/108/CEE on electromagnetic compatibility

Harmonised standards :

-UNI EN 676 Gas Burners

-CEI EN 60335-1(Household and similar electrical appliances - Safety. Part 1: General requirements;

- EN 50165 Electrical equipment of non-electric appliances for household and similar purposes. Safety requirements.

National standards :

-UNI 7824: Monobloc nebulizer burners for liquid fuels. Characteristics and test methods

Gas - Heavy oil burners

European directives:

- Directive 90/396/CEE - Gas Appliances;
- Directive 2006/95/EC on low voltage;
- Directive 2004/108/CEE on electromagnetic compatibility

Harmonised standards :

-UNI EN 676 (Gas Burners;

-CEI EN 60335-1(Household and similar electrical appliances - Safety. Part 1: General requirements;

- EN 50165 Electrical equipment of non-electric appliances for household and similar purposes. Safety requirements.

National standards :

-UNI 7824: Monobloc nebulizer burners for liquid fuels. Characteristics and test methods

PART I: INSTALLATION

Burner model identification

Burners are identified by burner type and model. Burner model identification is described as follows.

Type **PG60** Model	**G-.**	**AB.**	**S.**	***.**	**Y.**
(1)	(2)	(3)	(4)	(5)	(6)

(1) BURNER TYPE	**PG60-PG70-PG81**
(2) FUEL	**G -** Light oil **A -** Biodiesel
(3) OPERATION(Available versions)	**AB -** Double-stage
(4) BLAST TUBE	**S -** Standard **L -** Extended
(5) DESTINATION COUNTRY	* - see data plate*
(6) BURNER VERSION	**Y -** Special version with power supply 12V DC and oil driven air damper jack

Technical specifications

BURNERS		**PG60 G-..**	**PG70 G-..**	**PG81 G-..**
Output	min. - max. kW	145 - 698	291 - 1047	264-1900
Fuel		Light oil		
Light oil rate	min. -max. kg/h	12 - 59	24.5 - 88	22-160
Light oil viscosity	cSt @ 40°C	2 - 7.4		
Light oil density	kg/m^3	0.84		
Power supply		12V DC		
Total power consumption	kW	0.5	0.5	0.5
Index of protection		IP40		
Approx. weight	kg	42	60	76
Operation		Double-stage		
Operating temperature	°C	-10 ÷ +50		
Storage Temperature	°C	-20 ÷ +60		
Working service *		Intermittent		

NOTE: Choosing the nozzle for light oil, consider Hi equal to 10200 kcal/kg.

BURNERS		**PG60 A-..**	**PG70 A-..**	**PG81 A-..**
Output	min. - max. kW	145 - 698	291 - 1047	264-1900
Fuel		Biodiesel		
Biodiesel rate	min. -max. kg/h	14 - 67	28 - 100	25-182
Biodiesel viscosity	cSt @ 40°C	1.9 - 6 cSt		
Biodiesel density	kg/m^3	0.88		
Power supply		12V DC		
Total power consumption	kW	0.5	0.5	0.5
Index of protection		IP40		
Approx. weight	kg	42	60	76
Operation		Double-stage		
Operating temperature	°C	-10 ÷ +50		
Storage Temperature	°C	-20 ÷ +60		
Working service *		Intermittent		

NOTE: Choosing the nozzle for Bioediesel, consider Hi equal to 8950 kcal/kg.

Overall dimensions (mm)

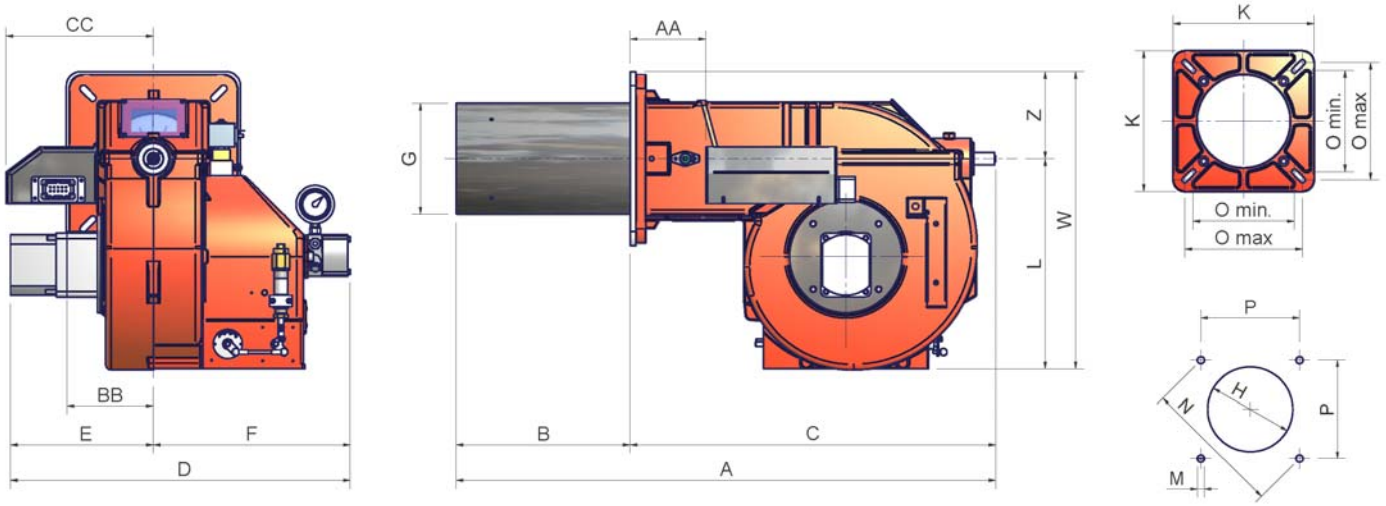

	A	AA	B	BB	C	CC	D	E	F	G	H	K	L	M	N	O		P	W	Z
																min.	max.			
PG60 12V S	-	-	244	-	-	-	-	-	-	Ø153	182	240	-	M10	269	190	190	190	-	-
PG60 12V L	-	-	442	-	-	-	-	-	-	Ø153	182	240	-	M10	269	190	190	190	-	-
PG70 12V S	961	135	310	154	651	263	605	255	351	Ø198	228	300	374	M10	330	216	250	233	529	155
PG70 12V L	1111	135	460	154	651	263	605	255	351	Ø198	228	300	374	M10	330	216	250	233	529	155
PG81 12V S	991	135	340	154	651	263	-	-	-	Ø234	264	300	374	M10	330	216	250	233	529	155
PG81 12V L	1141	135	490	154	651	263	-	-		Ø234	264	300	374	M10	330	216	250	233	529	155

S - Standard **L -** Extended

Performance curves

PG60

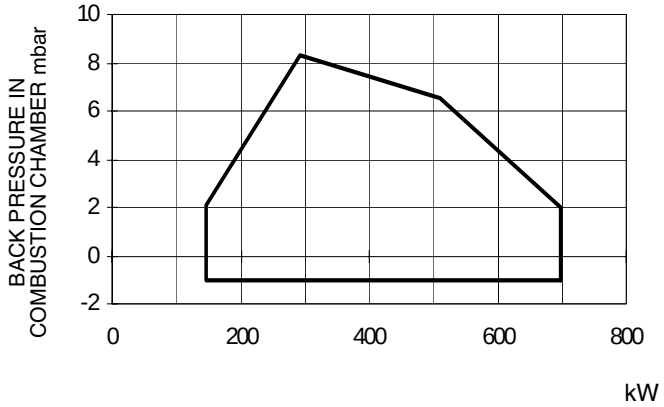

PG70

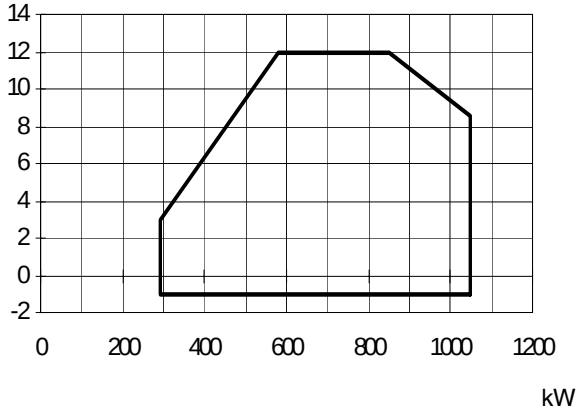

PG81

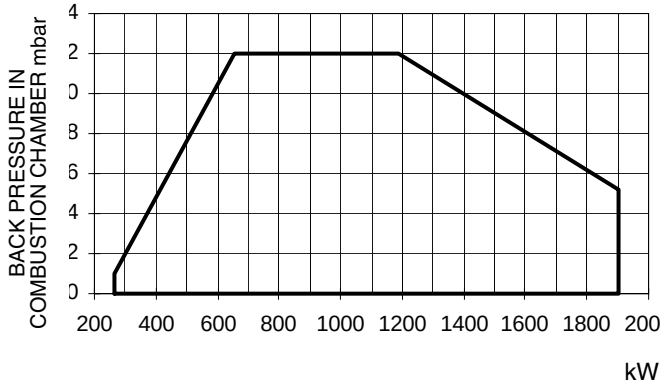

To get the input in kcal/h, multiply value in kW by 860.

Data are referred to standard conditions: atmospheric pressure at 1013mbar, ambient temperature at 15°C

MOUNTINGS AND CONNECTIONS

Packing

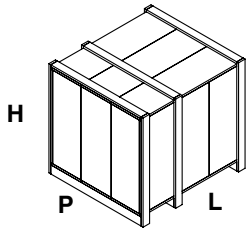

The burners are dispatched in wooden pakages whose dimensions are:
PG60: 1200mm x 670mm x 540 mm (L x P x H)
PG70-PG81: 1280mm x 850mm x 760 mm (L x P x H)

Packing cases of this kind are affected by humidity and are not suitable for stacking. The following are placed in each packing case.

1 burner;
2 oil flexible hoses;
1 oil filter;
1 gasket to be inserted between the burner and the boiler;
1 envelope containing this manual.

To get rid of the burner's packing, follow the procedures laid down by current laws on disposal of materials.

Fitting the burner to the boiler

To install the burner into the boiler, proceed as follows:

1 make a hole on the closing door of the combustion chamber as described on paragraph "Overall dimensions")
2 place the burner to the boiler: lift it up and handle it according to the procedure described on paragraph "Handling the burner";
3 place the 4 stud bolts (5) on the hole of the boiler's door, according to the burner's drilling plate described on paragraph "Overall dimensions";
4 fasten the 4 stud bolts;
5 place the gasket on the burner flange;
6 install the burner into the boiler;
7 fix the burner to the stud bolts, by means of the fixing nuts, according to the next picture.
8 After fitting the burner to the boiler, ensure that the gap between the blast tube and the refractory lining is sealed with appropriate insulating material (ceramic fibre cord or refractory cement).

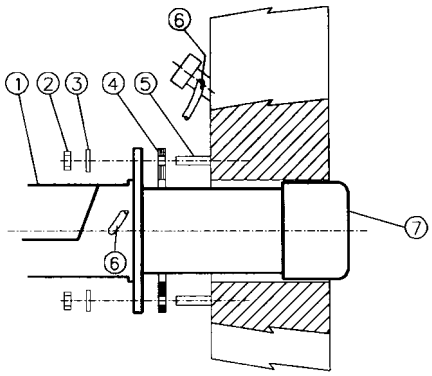

Keys

1 Burner
2 Fixing nut
3 Washer
4 Sealing gasket
5 Stud bolt
7 Blast tube

Handling the burner

⚠	**ATTENTION! The lhandling operations must be carried out by specialised and trained personnel. If these operations are not carried out correctly, the residual risk for the burner to overturn and fall down still persists.**
	To move the burner, use means suitable to support its weight (see paragraph "Technical specifications").

Hydraulic diagrams for light oil supplying circuits

Fig. 4 - Gravity circuit

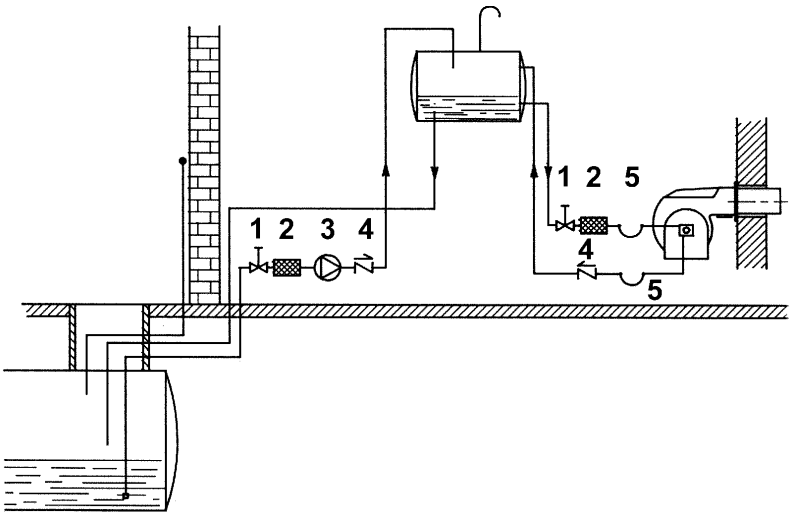

Fig. 5 - Ring circuit

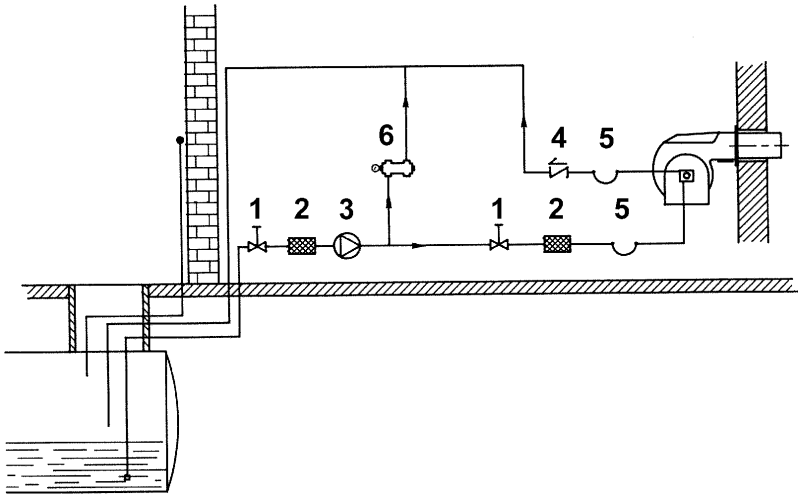

Fig. 6 - Suction circuit

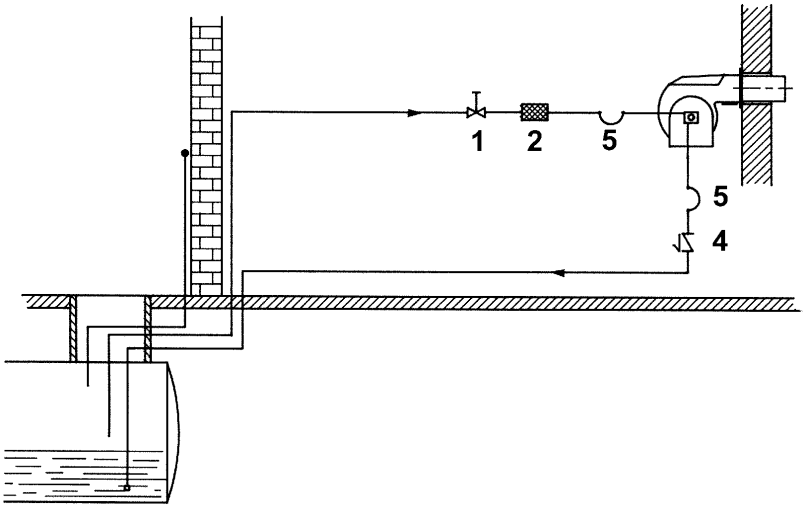

Key

1 Manual valve
2 Light oil filter
3 Light oil feeding pump
4 One way valve
5 Flexible hoses
6 Relief valve

NOTE: in plants where gravity or ring feed systems are provided, install an automatic interception device (see n. 4-Fig. 7).

Installation diagram of light oil pipes

⚠ **PLEASE READ CAREFULLY THE "WARNINGS" CHAPTER AT THE BEGINNING OF THIS MANUAL.**

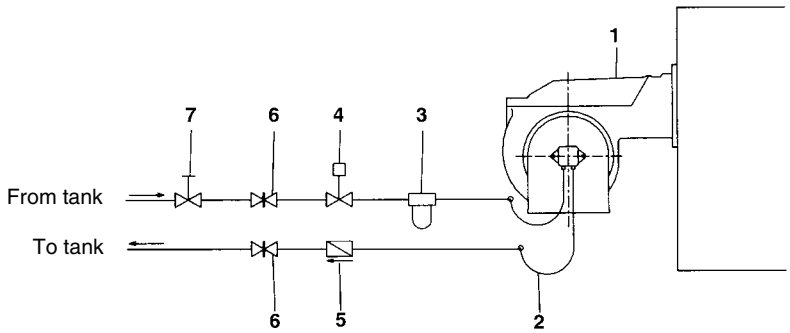

Fig. 7 - Double-pipe system

The burner is supplied with filter and flexible hoses, all the parts upstream the filter must be installed by the customer. As far as the hoses connection, see the related paragraph..

Key

1 Burner
2 Flexible hoses (fitted)
3 Light oil filter (fitted)
4 Automatic interceptor (*)
5 One-way valve (*)
6 Gate valve
7 Quick-closing gate-valve (outside the tank or boiler rooms)

(*) Only for installations with gravity, siphon or forced circulation feed systems. If the device installed is a solenoid valve, a timer must be installed to delay the valve closing.
The direct connection of the device without a timer may cause pump breaks.

Determining the diameter of oil supply pipes

Syphon twin pipe feedl

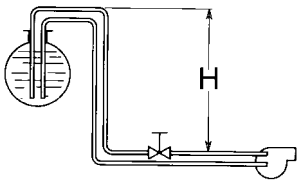

Twin pipe suction feed

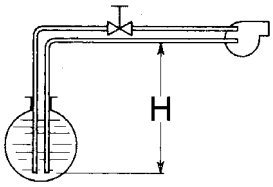

SUNTEC AJ6/J6/E6				
H (m)	L (m)			
	ø10	ø12	ø14	ø16
0	5	13	27	47
0,5	6	15	30	52
1	7	17	33	58
2	9	21	40	70
3	10	24	47	80
4	12	28	53	92

SUNTEC AJ6/J6/E6				
H (m)	L (m)			
	ø10	ø12	ø14	ø16
0	5	13	27	47
0,5	4	12	23	41
1	3	10	20	36
2	2	6	13	24
3	0	3	7	13
4	0	0	0	2

SUNTEC J7CCC/E7				
H (m)	L (m)			
	ø10	ø12	ø14	ø16
0	2	7	16	29
0,5	2	8	18	33
1	3	10	20	37
2	4	12	25	44
3	5	14	29	52
4	6	17	33	59

SUNTEC J7CCC/E7				
H (m)	L (m)			
	ø10	ø12	ø14	ø16
0	7	16	29	76
0,5	6	14	26	67
1	5	12	22	58
2	2	7	14	40
3	0	3	7	21
4	0	0	0	3

L= pipeline length in meters

The provided pumps can be installed both into single-pipe and double-pipe systems.

Single-pipe system: a single pipe drives the oil from the tank to the pump's inlet. Then, from the pump, the pressurised oil is driven to the nozzle: a part comes out from the nozzle while the othe part goes back to the pump. In this system, the by-pass pulg, if provided, must be removed and the optional return port, on the pump's body, must be sealed by steel plug and washer.

Double-pipe system: as for the single pipe system, a pipe that connects the tank to the pump's inlet is used besides another pipe that connects the pum's return port to the tank, as well. The excess of oil goes back to the tank: this installation can be considered self-bleeding. If provided, the inside by-pass plug must be installed to avoid air and fuel passing through the pump.

Burners are factory-set for double-stage systems. They can be suited for single-pipe system (recommended in the case of gravity feed) as decribed before.

To change from a 1-pipe system to a 2-pipe-system, insert the by-pass plug **G** (as for ccw-rotation- referring to the pump shaft).

Caution: Changing the direction of rotation, all connections on top and side are reversed.

PG60 - PG70: Suntec AJ6 - **PG81:** Suntec J6

Suntec AJ6

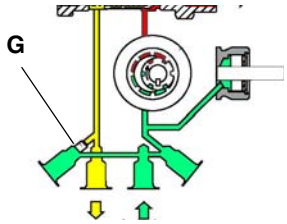

Suntec J6

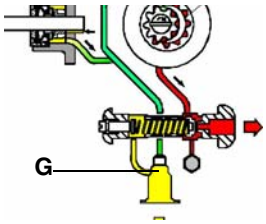

Bleed

Bleeding in two-pipe operation is automatic : it is assured by a bleed flat on the piston. In one-pipe operation, the plug of a pressure gauge port must be loosened until the air is evacuated from the system.

About the use of fuel pumps

- Make sure that the by-pass plug is not used in a single pipe installation, because the fuel unit will not function properly and damage to the pump and burner motor could result.
- Do not use fuel with additives to avoid the possible formation over time of compounds which may deposit between the gear teeth, thus obstructing them.
- After filling the tank, wait before starting the burner. This will give any suspended impurities time to deposit on the bottom of the tank, thus avoiding the possibility that they might be sucked into the pump.
- On initial commissioning a "dry" operation is foreseen for a considerable length of time (for example, when there is a long suction line to bleed). To avoid damages inject some lubrication oil into the vacuum inlet.
- Care must be taken when installing the pump not to force the pump shaft along its axis or laterally to avoid excessive wear on the joint, noise and overloading the gears.
- Pipes should not contain air pockets. Rapid attachment joint should therefore be avoided and threaded or mechanical seal junctions preferred. Junction threads, elbow joints and couplings should be sealed with removable sg component. The number of junctions should be kept to a minimum as they are a possible source of leakage.
- Do not use PTFE tape on the suction and return line pipes to avoid the possibility that particles enter circulation. These could deposit on the pump filter or the nozzle, reducing efficiency. Always use O-Rings or mechanical seal (copper or aluminium gaskets) junctions if possible.
- An external filter should always be installed in the suction line upstream of the fuel unit.

Light oil pumps

The pumps provided with these burners can be:

- PG60 - PG70: Suntec AJ6
- PG81: Suntec J6

Suntec AJ6	
Viscosity	2.8 - 75 cSt
Oil temperature	60°C max
Inlet maximum pressure	2 bar
Inlet minimum pressure	- 0.45 bar to avoid gasing
Rated speed	3600 rpm max.

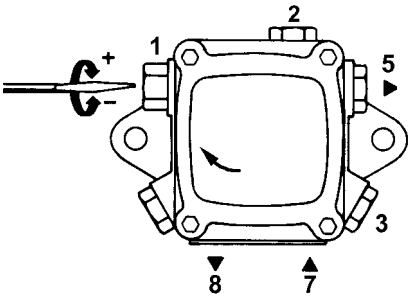

Suntec J6 - J7

Oil viscosity	2.8 - 200 cSt
Oil temperature	0 - 90°C
Min. suction pressure	- 0,45 barto avoid gasing
Max. suction pressure	1.5 bar
Max. return pressure	1.5 bar
Rotation speed	3600 rpm max.

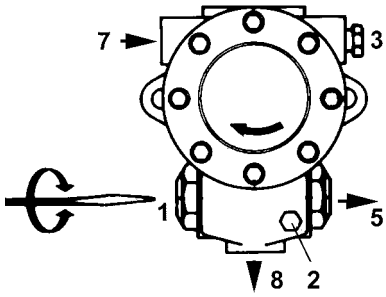

Key

1 Pressure governor
2 Pressure gauge
3 Vacuum gauge
4 Solenoid valve
5 Nozzle
7 Suction
8 Return (by-pass plug inserted)

Connecting the light oil flexible hoses

To connect the flexible light oil hoses to the pump, proceed as follows, according to the pump provided:

1 remove the closing nuts **A** and **R** on the inlet and return connections of the pump;

2 screw the rotating nut of the two flexible hoses on the pump being careful to avoid exchanging the inlet and return lines: see the arrows marked on the pump that show the inlet and the return (see prevoius paragraph).

3

Suntec AJ6	Suntec J6
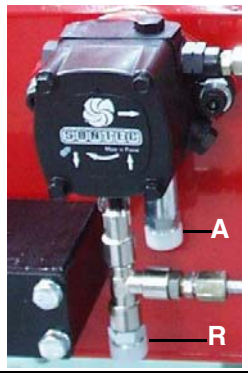	

Electrical connections

- Remove the cover from the burner electrical panel.
- Execute the electrical connections to the power supply terminal board as shown, check the direction of the fan-pump motor (see next paragraph) and replace the electrical panel cover.

ADJUSTMENTS

ATTENTION: **before starting the burner up, be sure that the manual cutoff valves are open. Be sure that the mains switch is closed.**

Before starting up the burner, make sure that the return pipe to the tank is not obstructed. Any obstruction would cause the pump seal to break.

ATTENTION: During commissioning operations, do not let the burner operate with insufficient air flow (danger of formation of carbon monoxide); if this should happen, make the fuel decrease slowly until the normal combustion values are achieved.

IMPORTANT! the combustion air excess must be adjusted according to the in the following chart:

Recommended combustion parameters		
Fuel	***Recommended (%) CO_2***	***Recommended (%) O_2***
Light oil	11.5 ÷ 13	2.9 ÷ 4.9

Priming the pump

Before carrying out any adjustment it is necessary to prime the light oil pump, proceeding as follows.

- Ensure the light oil valves are open (n. 6 in Fig. 5).
- Start the burner, light the photoresistor up after opening the solenoid valve and let the air bleed from the pressure gauge port.

Oil rate setting

The light oil flow rate is setting choosing a properly sized nozzle for the 1st and for the 2nd stage and setting the inlet pressure on the pump. For the choice of the nozzles, refer to the following tables, for pressure setting of the pump see page 12.

Note: all pumps are set to 12 bar. The nozzle rate at low flame must be higher than the rate referred to the minimum burner output.

Tab. 1 - Choosing the oil nozzles

OUTPUT			PUMP PRESSURE (bar)					
			10		12		14	
(kW)	(kCal/h)	(kg/h)	I° NOZZLE G.P.H.	II° NOZZLE G.P.H.	I° NOZZLE G.P.H.	II° NOZZLE G.P.H.	I° NOZZLE G.P.H.	II° NOZZLE G.P.H.
100	86.000	8,4	0,85	1,25	0,80	1,20	0,75	1,10
120	103.200	10,1	1,00	1,50	0,90	1,35	0,90	1,35
140	120.400	11,8	1,20	1,75	1,10	1,65	1,00	1,50
160	137.600	13,5	1,35	2,00	1,25	1,75	1,20	1,75
180	154.800	15,2	1,50	2,25	1,35	2,00	1,35	2,00
200	172.000	16,9	1,75	2,50	1,50	2,25	1,50	2,25
250	215.000	21,1	2,00	3,25	2,00	3,00	1,75	2,75
300	258.000	25,3	2,50	4,00	2,25	3,50	2,25	3,25
350	301.000	29,5	3,00	4,50	2,75	4,00	2,50	3,50
400	344.000	33,7	3,50	5,00	3,00	4,50	3,00	4,50
450	387.000	37,9	4,00	5,50	3,50	5,00	3,25	5,00
500	430.000	42,2	4,00	6,50	4,00	6,00	3,50	5,50
550	473.000	46,4	4,50	7,00	4,00	6,50	4,00	6,00
600	516.000	50,6	5,00	7,50	4,50	7,00	4,50	6,50
650	559.000	54,8	5,50	8,50	5,00	7,50	4,50	7,00
700	602.000	59,0	6,00	9,00	5,50	8,50	5,00	7,50
750	645.000	63,2	6,50	9,50	6,00	9,00	5,50	8,00
800	688.000	67,5	7,00	10,00	6,00	9,50	6,00	9,00
850	731.000	71,7	7,50	11,00	6,50	10,00	6,00	9,50
900	774.000	75,9	7,50	11,00	7,00	10,00	6,50	10,00
950	817.000	80,1	8,00	12,00	7,50	11,00	7,00	10,00
1000	860.000	84,3	8,50	13,00	8,00	12,00	7,50	11,00
1250	1.075.000	105,4	11,00	16,00	10,00	15,00	9,00	14,00
1500	1.290.000	126,5	13,00	19,50	12,00	18,00	11,00	16,00
1750	1.505.000	147,5	15,00	22,00	14,00	20,00	13,00	19,50
2000	1.720.000	168,6	17,00	26,00	16,00	24,00	15,00	22,00

Tab. 2 - Light oil nozzles rate

NOZZLE G.P.H.	PUMP PRESSURE (bar)													NOZZLE G.P.H.
	6	10	11	12	13	14	15	16	17	18	19	20	24	
	LIGHT OIL FLOW RATE (kg/h)													
0,30	0,9	1,1	1,2	1,3	1,3	1,4	1,4	1,5	1,5	1,5	1,6	1,6	1,8	0,30
0,35	1,0	1,3	1,4	1,5	1,5	1,6	1,6	1,7	1,7	1,8	1,8	1,9	2,1	0,35
0,40	1,2	1,5	1,6	1,7	1,7	1,8	1,9	1,9	2,0	2,1	2,1	2,2	2,4	0,40
0,45	1,3	1,7	1,8	1,9	2,0	2,0	2,1	2,2	2,2	2,3	2,4	2,4	2,7	0,45
0,50	1,5	1,9	2,0	2,1	2,2	2,3	2,3	2,4	2,5	2,6	2,6	2,7	3,0	0,50
0,55	1,6	2,1	2,2	2,3	2,4	2,5	2,6	2,7	2,7	2,8	2,9	3,0	3,3	0,55
0,60	1,8	2,3	2,4	2,5	2,6	2,7	2,8	2,9	3,0	3,1	3,2	3,2	3,6	0,60
0,65	1,9	2,5	2,6	2,7	2,8	2,9	3,0	3,1	3,2	3,3	3,4	3,5	3,9	0,65
0,70	2,1	2,7	2,8	2,9	3,1	3,2	3,3	3,4	3,5	3,6	3,7	3,8	4,2	0,70
0,75	2,2	2,9	3,0	3,1	3,3	3,4	3,5	3,6	3,7	3,9	4,0	4,1	4,4	0,75
0,80	2,4	3,1	3,2	3,4	3,5	3,6	3,8	3,9	4,0	4,1	4,2	4,3	4,7	0,80
0,85	2,5	3,3	3,4	3,6	3,7	3,9	4,0	4,1	4,2	4,4	4,5	4,6	5,0	0,85
0,90	2,7	3,4	3,6	3,8	3,9	4,1	4,2	4,4	4,5	4,6	4,8	4,9	5,3	0,90
1,00	3,0	3,8	4,0	4,2	4,4	4,5	4,7	4,8	5,0	5,1	5,3	5,4	5,9	1,00
1,10	3,3	4,2	4,4	4,6	4,8	5,0	5,2	5,3	5,5	5,7	5,8	6,0	6,5	1,10
1,20	3,6	4,6	4,8	5,0	5,2	5,4	5,6	5,8	6,0	6,2	6,3	6,5	7,1	1,20
1,25	3,7	4,8	5,0	5,2	5,5	5,7	5,9	6,1	6,2	6,4	6,6	6,8	7,4	1,25
1,35	4,0	5,2	5,4	5,7	5,9	6,1	6,3	6,5	6,7	6,9	7,1	7,3	8,0	1,35
1,50	4,4	5,7	6,0	6,3	6,5	6,8	7,0	7,3	7,5	7,7	7,9	8,1	8,9	1,50
1,65	4,9	6,3	6,6	6,9	7,2	7,5	7,7	8,0	8,2	8,5	8,7	8,9	9,8	1,65
1,75	5,2	6,7	7,0	7,3	7,6	7,9	8,2	8,5	8,7	9,0	9,2	9,5	10,4	1,75
2,00	5,9	7,7	8,0	8,4	8,7	9,1	9,4	9,7	10,0	10,3	10,6	10,8	11,9	2,00
2,25	6,7	8,6	9,0	9,4	9,8	10,2	10,6	10,9	11,2	11,6	11,9	12,2	13,3	2,25
2,50	7,4	9,6	10,0	10,5	10,9	11,3	11,7	12,1	12,5	12,8	13,2	13,5	14,8	2,50
2,75	8,2	10,5	11,0	11,5	12,0	12,5	12,9	13,3	13,7	14,1	14,5	14,9	16,3	2,75
3,00	8,9	11,5	12,0	12,6	13,1	13,6	14,1	14,5	15,0	15,4	15,8	16,2	17,8	3,00
3,25	9,6	12,4	13,1	13,6	14,2	14,7	15,2	15,7	16,2	16,7	17,2	17,6	19,3	3,25
3,50	10,4	13,4	14,1	14,7	15,3	15,9	16,4	17,0	17,5	18,0	18,5	19,0	20,8	3,50
4,00	11,9	15,3	16,1	16,8	17,5	18,1	18,8	19,4	20,0	20,5	21,1	21,7	23,7	4,00
4,50	13,3	17,2	18,1	18,9	19,6	20,4	21,1	21,8	22,5	23,1	23,8	24,4	26,7	4,50
5,00	14,8	19,1	20,1	21,0	21,8	22,7	23,4	24,2	25,0	25,7	26,4	27,1	29,7	5,00
5,50	16,3	21,1	22,1	23,1	24,0	24,9	25,8	26,6	27,5	28,3	29,0	29,8	32,6	5,50
6,00	17,8	23,0	24,1	25,2	26,2	27,2	28,1	29,1	30,0	30,8	31,7	32,5	35,6	6,00
6,50	19,3	24,9	26,1	27,3	28,4	29,4	30,5	31,5	32,5	33,4	34,3	35,2	38,6	6,50
7,00	20,8	26,8	28,1	29,4	30,6	31,7	32,8	33,9	34,9	36,0	36,9	37,9	41,5	7,00
7,50	22,2	28,7	30,1	31,5	32,7	34,0	35,2	36,3	37,4	38,5	39,6	40,6	44,5	7,50
8,00	23,7	30,6	32,1	33,6	34,9	36,2	37,5	38,7	39,9	41,1	42,2	43,3	47,5	8,00
8,50	25,2	32,5	34,1	35,7	37,1	38,5	39,9	41,2	42,4	43,7	44,9	46,0	50,4	8,50
9,00	26,7	34,5	36,1	37,7	39,3	40,8	42,2	43,6	44,9	46,2	47,5	48,7	53,4	9,00
9,50	28,2	36,4	38,2	39,8	41,5	43,0	44,5	46,0	47,4	48,8	50,1	51,4	56,4	9,50
10,00	29,7	38,3	40,2	41,9	43,7	45,3	46,9	48,4	49,9	51,4	52,8	54,1	59,3	10,00
11,00	32,6	42,1	44,2	46,1	48,0	49,8	51,6	53,3	54,9	56,5	58,1	59,6	65,2	11,00
12,00	35,6	45,9	48,2	50,3	52,4	54,4	56,3	58,1	59,9	61,6	63,3	65,0	71,2	12,00
13,00	38,6	49,8	52,2	54,5	56,8	58,9	61,0	63,0	64,9	66,8	68,6	70,4	77,1	13,00
13,50	40,0	51,7	54,2	56,6	58,9	61,2	63,3	65,4	67,4	69,4	71,3	73,1	80,1	13,50
14,00	41,5	53,6	56,2	58,7	61,1	63,4	65,7	67,8	69,9	71,9	73,9	75,8	83,0	14,00
15,00	44,5	57,4	60,2	62,9	65,5	68,0	70,3	72,6	74,9	77,1	79,2	81,2	89,0	15,00
16,00	47,5	61,3	64,3	67,1	69,9	72,5	75,0	77,5	79,9	82,2	84,4	86,6	94,9	16,00
17,00	50,4	65,1	68,3	71,3	74,2	77,0	79,7	82,3	84,9	87,3	89,7	92,1	100,8	17,00
18,00	53,4	68,9	72,3	75,5	78,6	81,5	84,4	87,2	89,9	92,5	95,0	97,5	106,8	18,00
19,00	56,4	72,7	76,3	79,7	82,9	86,1	89,1	92,0	94,9	97,6	100,3	102,9	112,7	19,00
19,50	57,8	74,7	78,3	81,8	85,1	88,3	91,4	94,4	97,4	100,2	102,9	105,6	115,7	19,50
20,00	59,3	76,6	80,3	83,9	87,3	90,6	93,8	96,9	99,8	102,7	105,6	108,3	118,6	20,00
22,00	65,2	84,2	88,3	92,3	96,0	99,7	103,2	106,6	109,8	113,0	116,1	119,1	130,5	22,00
24,00	71,2	91,9	96,4	100,7	104,8	108,7	112,5	116,2	119,8	123,3	126,7	130,0	142,4	24,00
25,00	74,1	95,7	100,4	104,9	109,1	113,3	117,2	121,1	124,8	128,4	131,9	135,4	148,3	25,00
26,00	77,1	99,6	104,4	109,1	113,5	117,8	121,9	125,9	129,8	133,6	137,2	140,8	154,2	26,00

Hydraulic scheme - operating principle

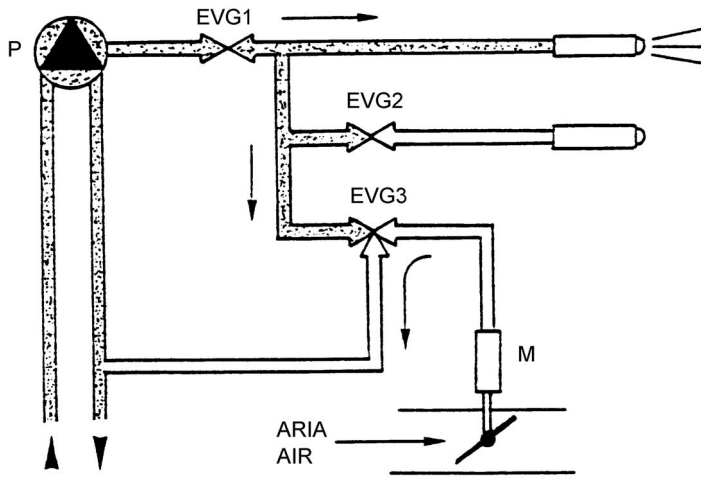

Fig. 8 - IGNITION AND LOW FLAME
Voltage on solenoid valve EVG1

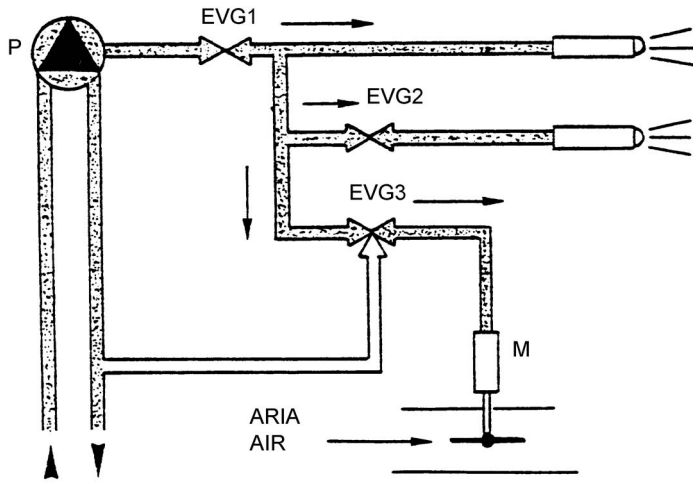

Fig. 9 - HIGH FLAME
Voltage on solenoid valves EVG, EVG2, EVG3

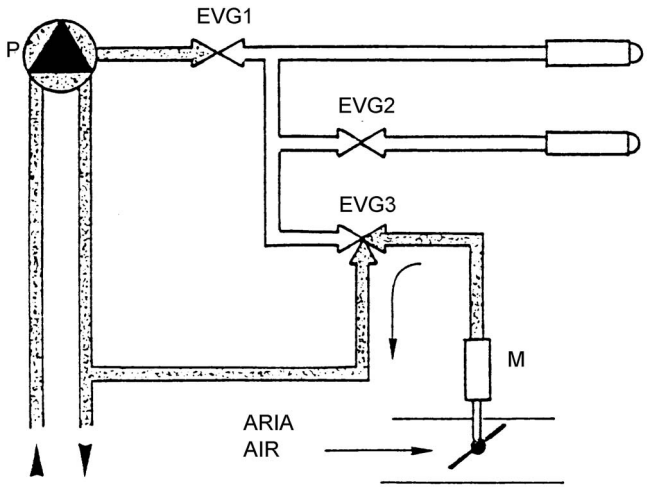

Fig. 10 - SHUTDOWN
There isn't any solenoid valves activated

Keys

EVG1 - Solenoid valve, first stage, NC

EVG1 - Solenoid valve, second stage, NC

M - Air damper drive

P - Pump

Hydraulic circuit - components arrangement

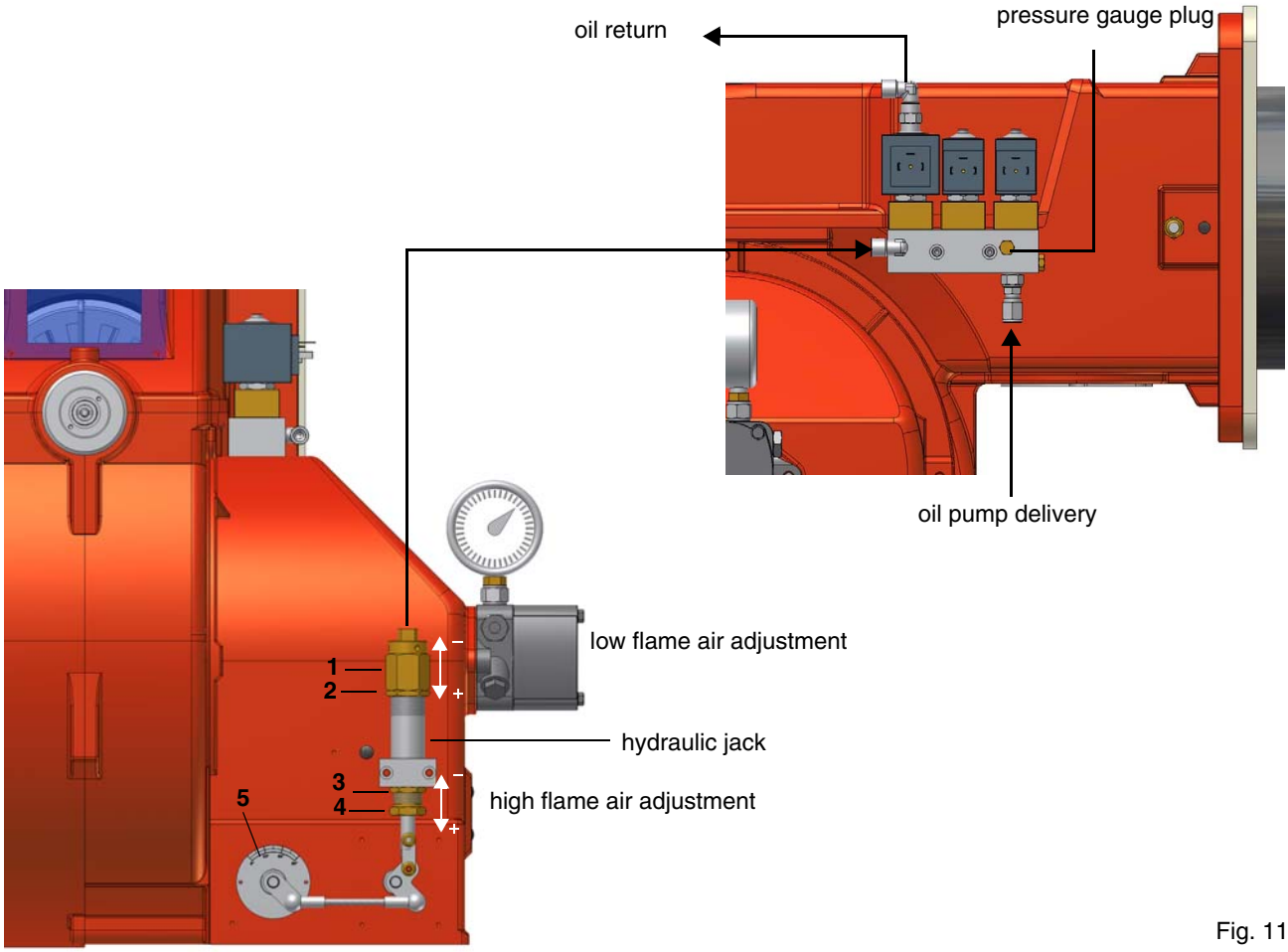

Fig. 11

Air adjustment

- **Low flame setting**

To set the low flame, proceed as follows:

1 open the contact of the second stage regulator;

2 unscrew the lock nut (Fig. 11-2) and twist directly the body of the air damper jack (Fig. 11-1): turn clockwise to increase the air flow of the low flame stage; turn counterclockwise to decrease the air flow;

3 the air flow change is shown by the air damper index (Fig. 11-5),

4 at the end of settings, tighten the nut (Fig. 11-2).

- **High flame setting**

To set the high flame proceed as follow.

1 Close the contact of the second stage regulator;

2 loose the nut 3 and turn the nut 4: urning counterclockwise the air flow in high flame mode is increased, turning clockwise it decreases.

3 The air flow change is indicated by the move of the air damper index 5.

4 At the end of settings, tighten the nut 3.

N:B: during the point “b” regulations, the point “a” remains unchanged.

Combustion head adjustment

The burner is factory-set with the combustion head at the "MAX." position (Fig. 13), corresponding to the maximum output. To operate at a lower output, move back the combustion head towards the "MIN." position, twisting the VRT screw (Fig. 12 and Fig. 13) clockwise.

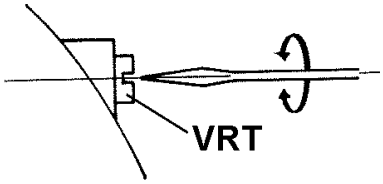

Fig. 12

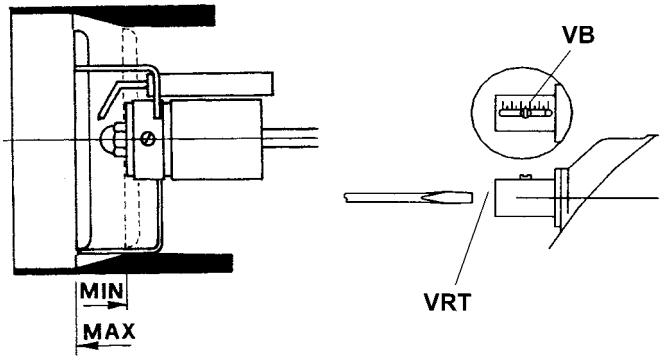

Fig. 13

N.B.: loose the screw VB before settings and tight it at the end of adjustments. Don't let the burner operate with the combustion head in the "MIN" position.

PART II: OPERATION

LIMITATIONS OF USE

THE BURNER IS AN APPLIANCE DESIGNED AND CONSTRUCTED TO OPERATE ONLY AFTER BEING CORRECTLY CONNECTED TO A HEAT GENERATOR (E.G. BOILER, HOT AIR GENERATOR, FURNACE, ETC.), ANY OTHER USE IS TO BE CONSIDERED IMPROPER AND THEREFORE DANGEROUS.

THE USER MUST GUARANTEE THE CORRECT FITTING OF THE APPLIANCE, ENTRUSTING THE INSTALLATION OF IT TO QUALIFIED PERSONNEL AND HAVING THE FIRST COMMISSIONING OF IT CARRIED OUT BY A SERVICE CENTRE AUTHORISED BY THE COMPANY MANUFACTURING THE BURNER.

A FUNDAMENTAL FACTOR IN THIS RESPECT IS THE ELECTRICAL CONNECTION TO THE GENERATOR'S CONTROL AND SAFETY UNITS (CONTROL THERMOSTAT, SAFETY, ETC.) WHICH GUARANTEES CORRECT AND SAFE FUNCTIONING OF THE BURNER.

THEREFORE, ANY OPERATION OF THE APPLIANCE MUST BE PREVENTED WHICH DEPARTS FROM THE INSTALLATION OPERATIONS OR WHICH HAPPENS AFTER TOTAL OR PARTIAL TAMPERING WITH THESE (E.G. DISCONNECTION, EVEN PARTIAL, OF THE ELECTRICAL LEADS, OPENING THE GENERATOR DOOR, DISMANTLING OF PART OF THE BURNER).

NEVER OPEN OR DISMANTLE ANY COMPONENT OF THE MACHINE.

OPERATE ONLY THE MAIN SWITCH, WHICH THROUGH ITS EASY ACCESSIBILITY AND RAPIDITY OF OPERATION ALSO FUNCTIONS AS AN EMERGENCY SWITCH, AND ON THE RESET BUTTON.

IN THE EVENT OF REPEATED LOCKOUTS, DO NOT PERSIST WITH THE RESET BUTTON AND CONTACT QUALIFIED PERSONNEL WHO WILL PROCEED TO ELIMINATE THE MALFUNCTION.

WARNING: DURING NORMAL OPERATION THE PARTS OF THE BURNER NEAREST TO THE GENERATOR (COUPLING FLANGE) CAN BECOME VERY HOT, AVOID TOUCHING THEM SO AS NOT TO GET BURNT.

OPERATION

- Check the flame control device is not in the lockout position, in this case reset it with the release button.
- Check all the thermostats and pressure switches give the all clear to operate to the burner.
- The burner is now operating in the low flame mode; after some seconds, the second stage operation begins or the burner remains in the low flame mode, depending on the needs of the plant.

PART III: MAINTENANCE

At least once a year carry out the maintenance operations listed below. In the case of seasonal servicing, it is recommended to carry out the maintenance at the end of each heating season; in the case of continuous operation the maintenance is carried out every 6 months.

⚠	**WARNING: ALL OPERATIONS ON THE BURNER MUST BE CARRIED OUT WITH THE MAINS DISCONNECTED AND THE FUEL MANAUL CUTOFF VALVES CLOSED!**
	ATTENTION: READ CAREFULLY THE "WARNINGS" CHAPTER AT THE BEGINNIG OF THIS MANUAL..

ROUTINE MAINTENANCE

- Clean and examine the oil filter cartdrige and replace it if necessary;
- examine the flexible oil pipes and check for possible leaks;
- check and clean the filter on the fuel pump: bilter must be thoroughly cleaned at least once in a season to ensure correct working of the fuel unit. To remove the filter, unscrew the four screws on the cover. When reassemble, make sure that the filter is mounted with the feet toward the pump body. If the gasket between cover and pump housing should be damaged, it must be replaced;
- dismantle, examine and clean the combustion head (see next paragraph); reassembling the combustion head be careful to respect the measures in Fig. 17;
- check the electrodes and their ceramic insulators, clean and adjust the electrodes or, if necessary, replace them (see related paragraph);
- dismantle and clean the oil nozzles (IMPORTANT: don't use metallic or sharp utensils but solvent or steam to clean the nozzles); at the end of these maintenance procedures, refit the burner, turn it on and verify the combustion: if in doubt, replace the defective nozzle or nozzles. If the burner is used intensively, it is recommended to replace the nozzles at the start of the operating season.
- check and clean carefully the flame detection photoelectric cell, if necessary replace it and, if in doubt, verify the detection circuit with the burner in operation.

Removing the combustion head

1 Remove the burner cover C;
2 remove the photoresistor from its site;
3 unscrew the connectors from the 2 oil pipes - Fig. 16 (use 2 spanners to avoid loosening the connections to the distribution block);
4 (only mod. **PG60**) loose the screw VRT to free the threaded rod AR, then unscrew the 2 screws V which hold the washer R and the screw VRT;
5 remove the complete assembly as shown in Fig. 15 (in models **PG70 - PG81**)the adjusting screw VRT is pulled out with the combustion head assembly

Note: to re-assembly, follow the procedure in the reversed order.

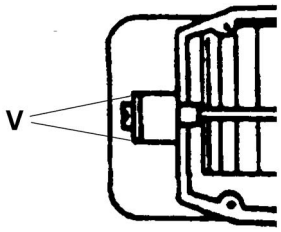

Fig. 14

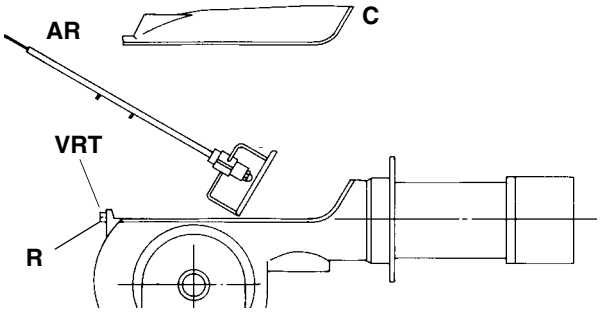

Fig. 15

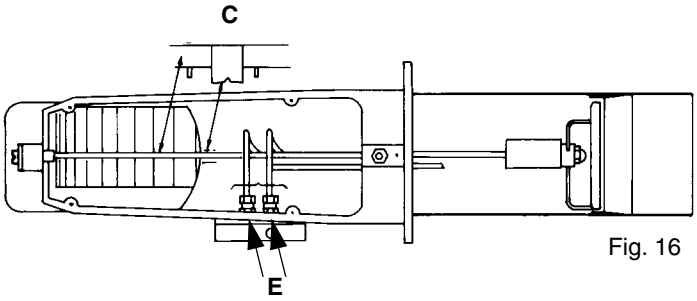

Fig. 16

.Correct position of electrodes and combustion head

To ensure a good ignition, the measures shown in Fig. 17 must be observed. Be sure to tighten the lock screw of the electrodes assembly, before refitting the combustion head.

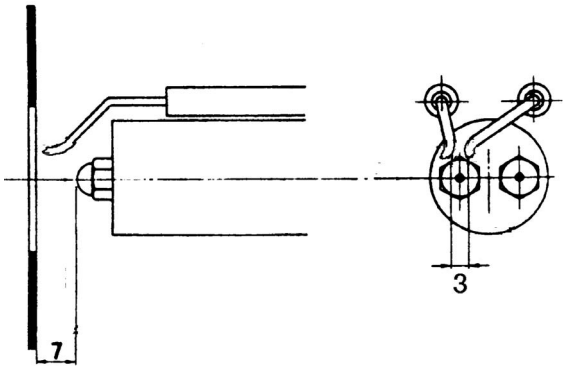

Fig. 17

Checking the flame signal

It is important to check the flame signal valus. Check it at the first ignition of the burner and during each servicing operation. For this purpose a DC voltmeter is necessary.

Drive the burner to a normal operation condition and measure the voltage between the terminals 21 of the ILME connetor, and "-" (negative), checking the voltage is lower than 0.5V.

This is a safety voltage, corresponding to a double lightin than necessary (the lower operation limit is 0.8V). In the case that a value exceeds the maximum allowed voltage, try to better position the sensor or clean it if dirty.

IMPORTANT: ENSURE TO THE BURNER A VOLTAGE NEVER LESS THAN 12V DC!

TROUBLESHOOTING FOR LIGHT OIL BURNER

THE BURNER DOESN'T START

- Mains switch open
- Line fuses interrupted
- Temperature governor contact open
- The flame control device is locked
- Fault in the flame control device

THE BURNER DOESN'T START AND LOCKS

- Fault in the flame control device
- Fault of the ignition transformer
- Fault of relais R1 (command of the ignition circuit)
- Wrong position of the ignition electrodes (see Fig. 16)
- Ignition electrodes broken or dirty
- Dirty nozzles
- Light oil solenoid valve EVG1 defective
- Light oil pressure too low (set to 12 bar)
- Light oil filters dirty
- Supply voltage 12V DC incorrect (e.g. 10V)

THE BURNER STARTS AND LOCKS

- Fault in the flame control device
- 1st stage nozzle dirty
- Uncalibrated flame (smokey)
- Photoresistor is broken or dirty
- Supply voltage 12V DC incorrect (e.g. 10V)

THE BURNER DOESN'T SWITCH TO HIGH FLAME

- The high-low flame regulator is broken or defective

THE BURNER SWITCH TO HIGH FLAME BUT THE AIR DAMPER DOESN'T OPEN

- Air damper jack is locked
- Solenoid valve EVG3 defective

THE BURNER SWITCH TO HIGH FLAME BUT THE SECOND NOZZLE DOESN'T SPRAY

- Solenoid valve EVG2 defective
- Second stage nozzle is dirty

SPARE PARTS

Desription	Code		
	PG60	**PG70**	**PG81**
RIGHT SHORT IGNITION ELECTRODE	2080249	2080249	2080249
LEFT EXTENDED IGNITION ELECTRODE	2080251	2080251	2080251
IGNITION ELECTRODES	2080346	2080346	2080346
BIODIESEL FILTER	2090014	2090015	2090015
LIGHT OIL FILTER	2090016	2090016	2090016
GASKET	2110013	2110033	2110033
FAN WHEEL	21500222150022	21500232150023	21500232150023
IGNITION TRANSFORMER	2170023	2170023	2170023
L159 SOLENOID VALVE	2190427	-	-
L338 SOLENOID VALVE	2190456	2190456	2190456
L122 SOLENOID VALVE	2190460	2190460	2190460
LIGHT OIL FLEXIBLE HOSES	2340002	2340002	2340003
BIODIESEL FLEXIBLE HOSES	2340073	2340097	2340097
PHOTORESISTOR	2510004	2510004	2510004
LIGHT OIL PUMP	2590103	2590103	2590109
BIODIESEL PUMP	2590116	2590116	2590116
NOZZLE 0.75 - 6.00 GPH - 60°	2610004	2610004	2610004
NOZZLE 6.50 - 45.00 GPH - 60°	2610017	2610017	2610017
COMBUSTION HEAD	3060174	3060141	3060142
BLAST TUBE (standard)	3090034	30900A9	30900G8
BLAST TUBE (long)	3090038	3090032	30900G9
IGNITION CABLES	6050109	6050133	6050133

BURNER EXPLODED VIEW

POS.	DESCRIPTION
1	BURNER HOUSING
2	GENERATOR GASKET
3	PHOTORESISTOR
4	AIR INTAKE DAMPER
5	AIR INTAKE DAMPER
6	AIR INTAKE
7	PUMP
8	AIR DAMPER SHAFT
9	AIR DAMPER SHAFT
10	HYDRAULIC JACK
11	PRESSURE GAUGE
12	STANDARD BLAST TUBE
13	AIR INLET CONE
14	COUPLING
15	FAN WHEEL
16	MOTOR MOUNTING FLANGE
17	BOARD

POS.	DESCRIPTION
18	BOARD COVER
19	10 PINS CONNECTOR
20	IGNITION TRANSFORMER
21	CLOSING PLATE
22	OIL MANIFOLD
23	OIL SOLENOID VALVE
24	OIL SOLENOID VALVE
25	COMBUSTION HEAD
26	NOZZLE HOLDER
27	NOZZLE
28	SHORT IGNITION ELECTRODE
29	LONG IGNITION ELECTRODE
30	IGNITION CABLE
31	HEAD ADJUSTING SCREW
32	PUMP BRACKET
33	PUMP

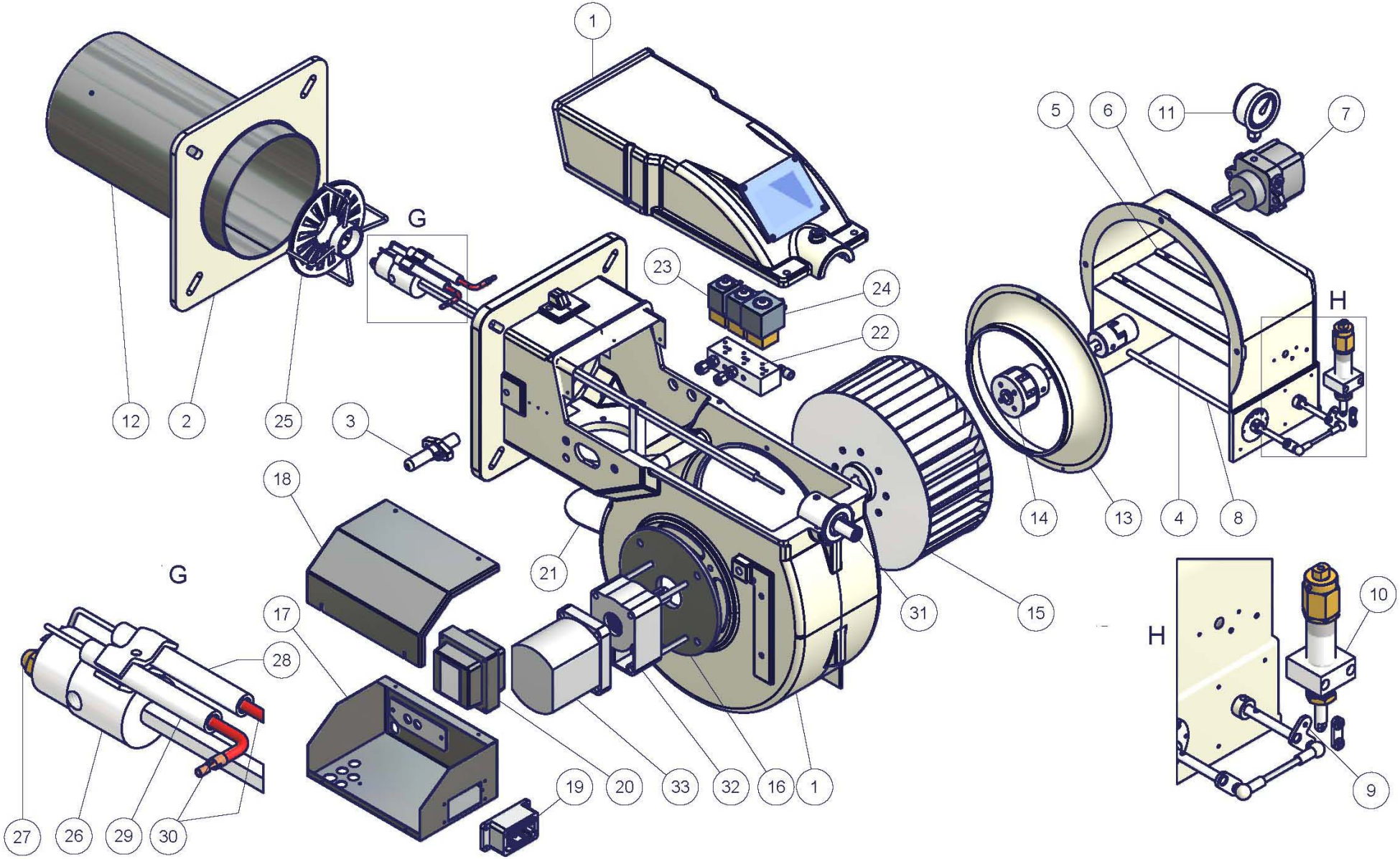
1
2
3
5
6
7
8
9
10
11
12
13
14
15
16
17
18
19
20
21
22
23
24
25
26
27
28
29
30
31
32
33
G
G
H
H

ELECTRICAL WIRING DIAGRAMS

Wiring diagram 15-071 Rev. 1

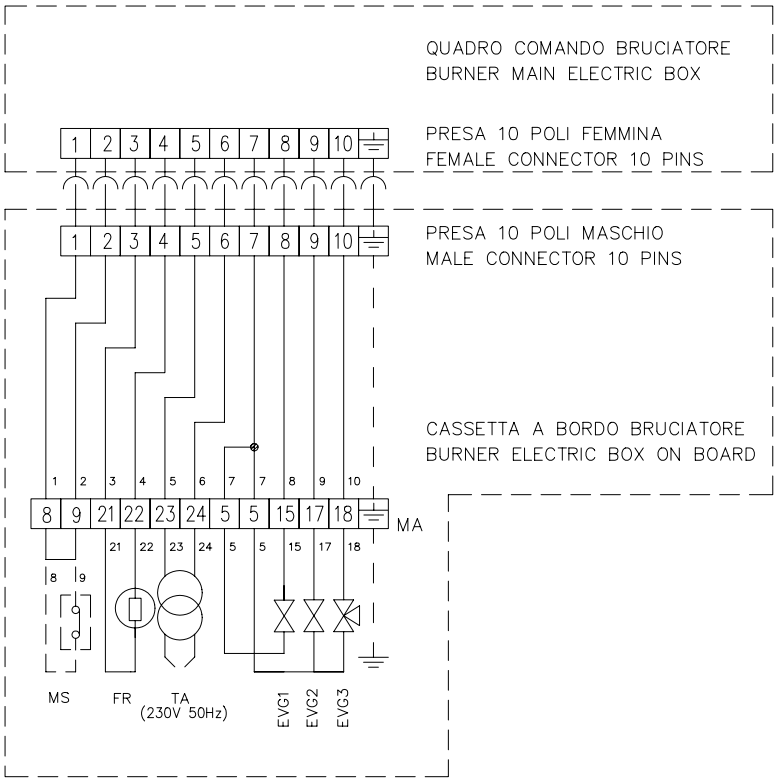

Keys

EVG1	Solenoid valve, first stage
EVG2	Solenoid valve, second stage
EVG3	3 ways light oil solenoid valve
FR	Photoresistor for flame detection
MS	Safety terminal block - if fitted remove the bridge between terminals 8 and 9 on terminal block MA.
ST3	Safety thermostat
TA	Ignition transformer 230V - 50Hz

C.I.B. UNIGAS S.p.A.
Via L.Galvani, 9 - 35011 Campodarsego (PD) - ITALY
Tel. +39 049 9200944 - Fax +39 049 9200945/9201269
web site: www.cibunigas.it - e-mail: cibunigas@cibunigas.it

Note: Specifications and and data subject to change. Errors and omissions excepted.