KP91
KP92
KP93
KR512
KR515
KR520
KR525

Gas - heavy oil burners

MANUAL OF INSTALLATION - USE - MAINTENANCE

CIB UNIGAS

BURNERS - BRUCIATORI - BRULERS - BRENNER - QUEMADORES - ГОРЕЛКИ

M03940CL 0.0 06/2020

DANGERS, WARNINGS AND NOTES OF CAUTION

THIS MANUAL IS SUPPLIED AS AN INTEGRAL AND ESSENTIAL PART OF THE PRODUCT AND MUST BE DELIVERED TO THE USER.

INFORMATION INCLUDED IN THIS SECTION ARE DEDICATED BOTH TO THE USER AND TO PERSONNEL FOLLOWING PRODUCT INSTALLATION AND MAINTENANCE.

THE USER WILL FIND FURTHER INFORMATION ABOUT OPERATING AND USE RESTRICTIONS, IN THE SECOND SECTION OF THIS MANUAL. WE HIGHLY RECOMMEND TO READ IT.

CAREFULLY KEEP THIS MANUAL FOR FUTURE REFERENCE.

1) GENERAL INTRODUCTION

- The equipment must be installed in compliance with the regulations in force, following the manufacturer's instructions, by qualified personnel.
- Qualified personnel means those having technical knowledge in the field of components for civil or industrial heating systems, sanitary hot water generation and particularly service centres authorised by the manufacturer.
- Improper installation may cause injury to people and animals, or damage to property, for which the manufacturer cannot be held liable.
- Remove all packaging material and inspect the equipment for integrity.

In case of any doubt, do not use the unit - contact the supplier.

The packaging materials (wooden crate, nails, fastening devices, plastic bags, foamed polystyrene, etc), should not be left within the reach of children, as they may prove harmful.

- Before any cleaning or servicing operation, disconnect the unit from the mains by turning the master switch OFF, and/or through the cut-out devices that are provided.
- Make sure that inlet or exhaust grilles are unobstructed.
- In case of breakdown and/or defective unit operation, disconnect the unit. Make no attempt to repair the unit or take any direct action.

Contact qualified personnel only.

Units shall be repaired exclusively by a servicing centre, duly authorised by the manufacturer, with original spare parts and accessories.

Failure to comply with the above instructions is likely to impair the unit's safety.

To ensure equipment efficiency and proper operation, it is essential that maintenance operations are performed by qualified personnel at regular intervals, following the manufacturer's instructions.

- When a decision is made to discontinue the use of the equipment, those parts likely to constitute sources of danger shall be made harmless.
- In case the equipment is to be sold or transferred to another user, or in case the original user should move and leave the unit behind, make sure that these instructions accompany the equipment at all times so that they can be consulted by the new owner and/or the installer.
- This unit shall be employed exclusively for the use for which it is meant. Any other use shall be considered as improper and, therefore, dangerous.

The manufacturer shall not be held liable, by agreement or otherwise, for damages resulting from improper installation, use and failure to comply with the instructions supplied by the manufacturer.The occurrence of any of the following circustances may cause explosions, polluting unburnt gases (example: carbon monoxide CO), burns, serious harm to people, animals and things:

- Failure to comply with one of the WARNINGS in this chapter
- Incorrect handling, installation, adjustment or maintenance of the burner
- Incorrect use of the burner or incorrect use of its parts or optional supply

2) SPECIAL INSTRUCTIONS FOR BURNERS

- The burner should be installed in a suitable room, with ventilation openings complying with the requirements of the regulations in force, and sufficient for good combustion.
- Only burners designed according to the regulations in force should be used.
- This burner should be employed exclusively for the use for which it was designed.
- Before connecting the burner, make sure that the unit rating is the same as delivery mains (electricity, gas oil, or other fuel).
- Observe caution with hot burner components. These are, usually, near to the flame and the fuel pre-heating system, they become hot during the unit operation and will remain hot for some time after the burner has stopped.

When the decision is made to discontinue the use of the burner, the user shall have qualified personnel carry out the following operations:

a Remove the power supply by disconnecting the power cord from the mains.

b Disconnect the fuel supply by means of the hand-operated shut-off valve and remove the control handwheels from their spindles.

Special warnings

- Make sure that the burner has, on installation, been firmly secured to the appliance, so that the flame is generated inside the appliance fire-box.
- Before the burner is started and, thereafter, at least once a year, have qualified personnel perform the following operations:

a set the burner fuel flow rate depending on the heat input of the appliance;

b set the flow rate of the combustion-supporting air to obtain a combustion efficiency level at least equal to the lower level required by the regulations in force;

c check the unit operation for proper combustion, to avoid any harmful or polluting unburnt gases in excess of the limits permitted by the regulations in force;

d make sure that control and safety devices are operating properly;

e make sure that exhaust ducts intended to discharge the products of combustion are operating properly;

f on completion of setting and adjustment operations, make sure that all mechanical locking devices of controls have been duly tightened;

g make sure that a copy of the burner use and maintenance instructions is available in the boiler room.

- In case of a burner shut-down, reser the control box by means of the RESET pushbutton. If a second shut-down takes place, call the Technical Service, **without trying to RESET further**.
- The unit shall be operated and serviced by qualified personnel only, in compliance with the regulations in force.

3) GENERAL INSTRUCTIONS DEPENDING ON FUEL USED

3a) ELECTRICAL CONNECTION

- For safety reasons the unit must be efficiently earthed and installed as required by current safety regulations.
- It is vital that all saftey requirements are met. In case of any doubt, ask for an accurate inspection of electrics by qualified personnel, since the manufacturer cannot be held liable for damages that may be caused by failure to correctly earth the equipment.
- Qualified personnel must inspect the system to make sure that it is adequate to take the maximum power used by the equipment shown on the equipment rating plate. In particular, make sure that the system cable cross section is adequate for the power absorbed by the unit.
- No adaptors, multiple outlet sockets and/or extension cables are permitted to connect the unit to the electric mains.
- An omnipolar switch shall be provided for connection to mains, as required by the current safety regulations.
- The use of any power-operated component implies observance of a few basic rules, for example:
  - do not touch the unit with wet or damp parts of the body and/or with bare feet;
  - do not pull electric cables;
  - do not leave the equipment exposed to weather (rain, sun, etc.) unless expressly required to do so;
  - do not allow children or inexperienced persons to use equipment;
- The unit input cable shall not be replaced by the user.
  In case of damage to the cable, switch off the unit and contact qualified personnel to replace.
  When the unit is out of use for some time the electric switch supplying all the power-driven components in the system (i.e. pumps, burner, etc.) should be switched off.

3b) FIRING WITH GAS, LIGHT OIL OR OTHER FUELS

GENERAL

- The burner shall be installed by qualified personnel and in compliance with regulations and provisions in force; wrong installation can cause injuries to people and animals, or damage to property, for which the manufacturer cannot be held liable.
- Before installation, it is recommended that all the fuel supply system pipes be carefully cleaned inside, to remove foreign matter that might impair the burner operation.
- Before the burner is commissioned, qualified personnel should inspect the following:

a the fuel supply system, for proper sealing;
b the fuel flow rate, to make sure that it has been set based on the firing rate required of the burner;
c the burner firing system, to make sure that it is supplied for the designed fuel type;
d the fuel supply pressure, to make sure that it is included in the range shown on the rating plate;
e the fuel supply system, to make sure that the system dimensions are adequate to the burner firing rate, and that the system is equipped with all the safety and control devices required by the regulations in force.

- When the burner is to remain idle for some time, the fuel supply tap or taps should be closed.

SPECIAL INSTRUCTIONS FOR USING GAS

Have qualified personnel inspect the installation to ensure that:

a the gas delivery line and train are in compliance with the regulations and provisions in force;
b all gas connections are tight;
c the boiler room ventilation openings are such that they ensure the air supply flow required by the current regulations, and in any case are sufficient for proper combustion.

- Do not use gas pipes to earth electrical equipment.
- Never leave the burner connected when not in use. Always shut the gas valve off.
- In case of prolonged absence of the user, the main gas delivery valve to the burner should be shut off.

Precautions if you can smell gas

a do not operate electric switches, the telephone, or any other item likely to generate sparks;
b immediately open doors and windows to create an air flow to purge the room;
c close the gas valves;
d contact qualified personnel.

- Do not obstruct the ventilation openings of the room where gas appliances are installed, to avoid dangerous conditions such as the development of toxic or explosive mixtures.

DIRECTIVES AND STANDARDS

Gas burners

European directives

-Regulation 2016/426/UE (appliances burning gaseous fuels)
-2014/35/UE (Low Tension Directive)
-2014/30/UE (Electromagnetic compatibility Directive)
-2006/42/EC (Machinery Directive)

Harmonized standards

-UNI EN 676 (Automatic forced draught burners for gaseous fuels)
-EN 55014-1 (Electromagnetic compatibility- Requirements for house hold appliances, electric tools and similar apparatus)
-EN 60204-1:2006 (Safety of machinery – Electrical equipment of machines.)
-CEI EN 60335-1 (Specification for safety of household and similar electrical appliances);
-CEI EN 60335-2-102 (Household and similar electrical appliances. Safety. Particular requirements for gas, oil and solid-fuel burning appliances having electrical connections).
-UNI EN ISO 12100:2010 (Safety of machinery - General principles for design - Risk assessment and risk reduction);

Light oil burners

European directives

-2014/35/UE (Low Tension Directive)
-2014/30/UE (Electromagnetic compatibility Directive)
-2006/42/EC (Machinery Directive)

Harmonized standards

-UNI EN 267-2011(Automatic forced draught burners for liquid fuels)
-EN 55014-1 (Electromagnetic compatibility- Requirements for house hold appliances, electric tools and similar apparatus)
-EN 60204-1:2006 (Safety of machinery – Electrical equipment of machines.)
-CEI EN 60335-1 (Specification for safety of household and similar electrical appliances);
-CEI EN 60335-2-102 (Household and similar electrical appliances. Safety. Particular requirements for gas, oil and solid-fuel burning appliances having electrical connections).
-UNI EN ISO 12100:2010 (Safety of machinery - General principles for design - Risk assessment and risk reduction);

Heavy oil burners

European Directives

-2014/35/UE (Low Tension Directive)
-2014/30/UE (Electromagnetic compatibility Directive)
-2006/42/EC (Machinery Directive)

Harmonized standards

-UNI EN 267(Automatic forced draught burners for liquid fuels)
-EN 55014-1 (Electromagnetic compatibility- Requirements for house hold appliances, electric tools and similar apparatus)
-EN 60204-1:2006 (Safety of machinery – Electrical equipment of machines.)
-CEI EN 60335-1 (Specification for safety of household and similar electrical appliances);
-CEI EN 60335-2-102 (Household and similar electrical appliances. Safety. Particular requirements for gas, oil and solid-fuel burning appliances having electrical connections).
-UNI EN ISO 12100:2010 (Safety of machinery - General principles for design - Risk assessment and risk reduction);

Gas - Light oil burners

European Directives

-Regulation 2016/426/UE (appliances burning gaseous fuels)
-2014/35/UE (Low Tension Directive)
-2014/30/UE (Electromagnetic compatibility Directive)
-2006/42/EC (Machinery Directive)

Harmonized standards

-UNI EN 676 (Automatic forced draught burners for gaseous fuels)
-UNI EN 267(Automatic forced draught burners for liquid fuels)
-EN 55014-1 (Electromagnetic compatibility- Requirements for house hold appliances, electric tools and similar apparatus)
-EN 60204-1:2006 (Safety of machinery – Electrical equipment of machines.)
-CEI EN 60335-1 (Specification for safety of household and similar electrical appliances);
-CEI EN 60335-2-102 (Household and similar electrical appliances. Safety. Particular requirements for gas, oil and solid-fuel burning appliances having electrical connections).
-UNI EN ISO 12100:2010 (Safety of machinery - General principles for design - Risk assessment and risk reduction);

Gas - Heavy oil burners

European directives:

-Regulation 2016/426/UE (appliances burning gaseous fuels)
-2014/35/UE (Low Tension Directive)
-2014/30/UE (Electromagnetic compatibility Directive)
-2006/42/EC (Machinery Directive)

Harmonized standards

-UNI EN 676 (Automatic forced draught burners for gaseous fuels)
-EN 55014-1 (Electromagnetic compatibility- Requirements for house hold appliances, electric tools and similar apparatus)
-EN 60204-1:2006 (Safety of machinery – Electrical equipment of machines.)
-CEI EN 60335-1 (Specification for safety of household and similar electrical appliances);
-CEI EN 60335-2-102 (Household and similar electrical appliances. Safety. Particular requirements for gas, oil and solid-fuel burning appliances having electrical connections).
-UNI EN ISO 12100:2010 (Safety of machinery - General principles for design - Risk assessment and risk reduction);

Industrial burners

European directives

-Regulation 2016/426/UE (appliances burning gaseous fuels)
-2014/35/UE (Low Tension Directive)
-2014/30/UE (Electromagnetic compatibility Directive)
-2006/42/EC (Machinery Directive)

Harmonized standards

-EN 55014-1 (Electromagnetic compatibility- Requirements for house hold appliances, electric tools and similar apparatus)
-EN 746-2 (Industrial thermoprocessing equipment - Part 2: Safety requirements for combustion and fuel handling systems)
-UNI EN ISO 12100:2010 (Safety of machinery - General principles for design - Risk assessment and risk reduction);
-EN 60204-1:2006 (Safety of machinery – Electrical equipment of machines.)
-EN 60335-2 (Electrical equipment of non-electric appliances for household and similar purposes. Safety requirements)

Burner data plate

For the following information, please refer to the data plate:

- burner type and burner model: must be reported in any communication with the supplier
- burner ID (serial number): must be reported in any communication with the supplier
- date of production (year and month)
- information about fuel type and network pressure

Type	--
Model	--
Year	--
S.Number	--
Output	--
Oil Flow	--
Fuel	--
Category	--
Gas Pressure	--
Viscosity	--
El.Supply	--
El.Consump.	--
Fan Motor	--
Protection	--
Drwaing n°	--
P.I.N.	--

SYMBOLS USED

WARNING! Failure to observe the warning may result in irreparable damage to the unit or damage to the environment

DANGER! Failure to observe the warning may result in serious injuries or death.

WARNING! Failure to observe the warning may result in electric shock with lethal consequences

Figures, illustrations and images used in this manual may differ in appearance from the actual product.

BURNER SAFETY

The burners - and the configurations described below - comply with the regulations in force regarding health, safety and the environment. For more in-depth information, refer to the declarations of conformity that are an integral part of this Manual.

DANGER! Incorrect motor rotation can seriously damage property and injure people.

Residual risks deriving from misuse and prohibitions

The burner has been built in order to make its operation safe; there are, however, residual risks.

Do not touch any mechanical moving parts with your hands or any other part of your body. Injury hazard
Do not touch any parts containing fuel (i.e. tank and pipes). Scalding hazard
Do not use the burner in situations other than the ones provided for in the data plate.
Do not use fuels other than the ones stated.
Do not use the burner in potentially explosive environments.
Do not remove or by-pass any machine safety devices.
Do not remove any protection devices or open the burner or any other component while the burner is running.
Do not disconnect any part of the burner or its components while the burner is running.
Untrained staff must not modify any linkages.

After any maintenance, it is important to restore the protection devices before restarting the machine.
All safety devices must be kept in perfect working order.
Personnel authorized to maintain the machine must always be provided with suitable protections.

ATTENTION: while running, the parts of the burner near the generator (coupling flange) are subject to overheating. Where necessary, avoid any contact risks by wearing suitable PPE.

PART I: SPECIFICATIONS

BURNER FEATURES

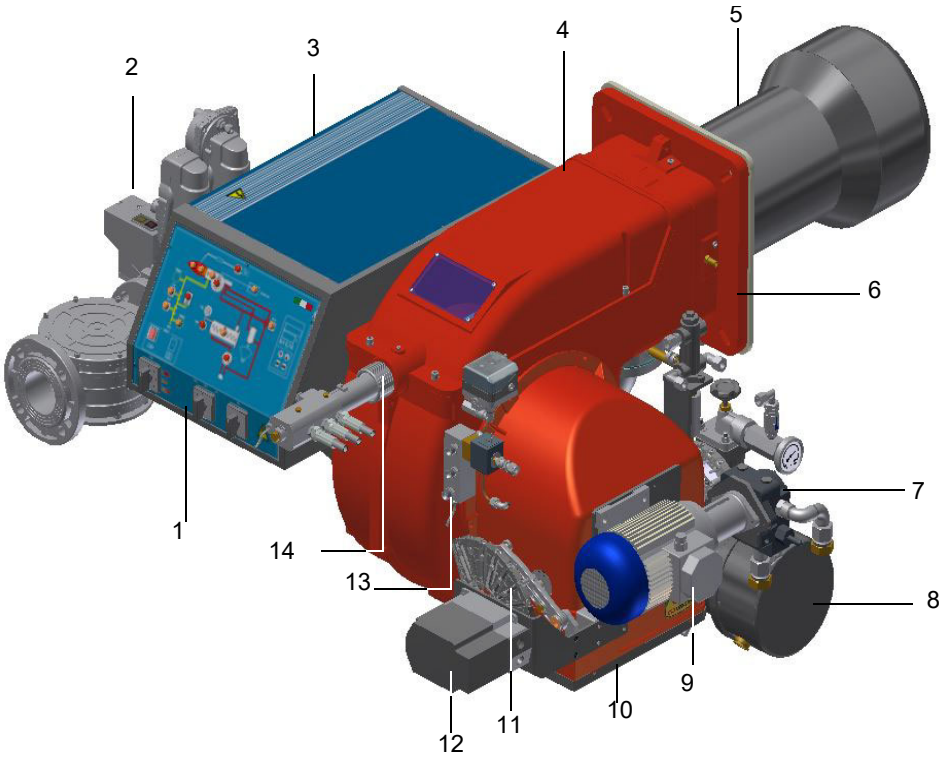

Note: the figure is indicative only

Keys
1 Mimic panel with startup switch
2 Gas train
3 Electrical panel
4 Cover
5 Blast tube - Combustion head
6 Flange
7 Pump
8 Preheater Tank
9 Motor Pump
10 Air intake
11 Adjusting cams
12 Actuator
13 Oil manifold
14 Head adjusting ring nut

Burner model identification

Burners are identified by burner type and model. Burner identification is described as follows.

Type	**KR525**	Model	**MN.**	**MD.**	**S.**	**.**	**A.**	**1.**	**60**
	(1)		**(2)**	**(3)**	**(4)**	**(5)**	**(6)**	**(7)**	**(8)**

(1)	BURNER TYPE	**KP91 - KP92 - KP93 - KR512 - KR515 - KR520 - KR525**
(2)	FUEL	M - Natural gas, L - LPG E - Heavy oil, viscosity <= 110cSt (15°E) @ 50° C D - Heavy oil, viscosity <= 400cSt (50° E) @ 50° C P - Petroleum, viscosity 89cSt (12° E) @ 50° C
(3)	OPERATION (Available versions)	PR - Progressive MD - Fully modulating
(4)	BLAST TUBE	S - Standard L - Extended
(5)	DESTINATION COUNTRY	* - see data plate
(6)	BURNER VERSION	A - Standard
(7)	EQUIPMENT	1 = 2 gas valves + gas proving system 8 = 2 gas valves + gas proving system + maximum gas pressure switch
(8)	GAS CONNECTION (see Specifications)	50 = Rp2 65 = 65 80 = 80 100 = 100

BURNERS		KP91	KP92	KP93
Output	min. - max. kW	480 - 2670	480-3050	550 - 4100
Fuel		Natural gasHeavy oil		
Category		(see next paragraph)		
Gas rate	min. - max. (Stm^3/h)	51 - 283	51 - 323	58 - 434
Gas pressure	min. - max. mbar	(Note2)		
Viscosity		See “Burner model identification” table		
Oil train inlet pressure	max. bar	4		
Heavy oil rate	min. - max. kg/h	42 - 233	43 - 272	49 - 365
Power supply		400V 3N ~ 50Hz		
Total power consumption (Heavy oil)	kW	23,6	25,1	33,1
Total power consumption (Petroleum)	kW	11,6	13,1	17,1
Fan motor	kW	4	5.5	7.5
Pump motor	kW	1.1		
Pre-heater resistors (heavy oil)	kW	18	18	24
Pre-heater resistors (Petroleum)	kW	6	6	8
Protection		IP40		
Operation		Progressive - Fully modulating		
Gas Train 50	Valves size / Gas connection	50 / Rp 2”		
Gas Train 65	Valves size / Gas connection	65 / 65		
Gas Train 80	Valves size / Gas connection	80 / 80		
Gas Train 100	Valves size / Gas connection	100 / 100		
Operating temperature	°C	-10 ÷ +50		
Storage Temperature	°C	-20 ÷ +60		
Working service*		Intermittent		

BURNERS		KR512	KR515	KR520	KR525
Output	min. - max. kW	600 - 4500	770 - 5200	1000 - 6400	2000 - 8000
Fuel		Natural gasHeavy oil			
Category		(see next paragraph)			
Gas rate	min. - max. (Stm^3/h)	63 - 476	81 - 550	106 - 677	212 - 847
Gas pressure	min. - max. mbar	(Note2)			
Viscosity		See “Burner model identification” table			
Oil train inlet pressure	max. bar	4			
Heavy oil rate	min. - max. kg/h	53 - 401	69 - 463	89 - 570	178 - 713
Power supply		400V 3N ~ 50Hz			
Total power consumption (Heavy oil)	kW	35,2	43	59,7	69,2
Total power consumption (Petroleum)	kW	19,2	23	31,7	37,2
Fan motor	kW	9,2	11	15	18,5
Pump motor	kW	1,5	1,5	2,2	2,2
Pre-heater resistors (heavy oil)	kW	24	30	42	48
Pre-heater resistors (Petroleum)	kW	8	10	14	16
Protection		IP40			
Operation		Progressive - Fully modulating			
Gas Train 50	Valves size/ Gas connection	50 / Rp 2”			
Gas Train 65	Valves size / Gas connection	65 / 65			
Gas Train 80	Valves size / Gas connection	80 / 80			
Gas Train 100	Valves size / Gas connection	100 / 100			
Operating temperature	°C	-10 ÷ +50			
Storage Temperature	°C	-20 ÷ +60			
Working service*		Intermittent			

Note1:	**All gas flow rates are referred to Stm^3/h (1.013 mbar absolute pressure, 15° C temperature) and are valid for G20 gas (net calorific value H_i = 34.02 MJ / Stm^3);**
Note2:	**Maximum gas pressure = 500mbar (with Siemens VGD or Dungs MultiBloc MBE)** **Minimum gas pressure = see gas curves.**
Note3:	**Burners are suitable only for indoor operation with a maximum relative humidity of 80 %**

Heavy oil net calorific value (Hi): 40.4MJ/kg (average value).

(*) NOTE ON THE WORKING SERVICE: the control box automatically stops after 24h of continuous working. The control box immediately starts up, automatically.

BURNERS		KP91 L-	KP92 L-	KP93 L-
Output	min. - max. kW	480 - 2670	480-3050	550 - 4100
Fuel		LD - L LPG - D Heavy oil, viscosity <= 400cSt (50° E) @ 50° C		
Category		(see next paragraph)		
Gas rate- LPG	min. - max. (Stm^3/h)	17,9 - 100	17,9 - 114	21 - 153
Gas pressure	min. - max. mbar	(Note2)		
Viscosity		See “Burner model identification” table		
Oil train inlet pressure	max. bar	4		
Heavy oil rate	min. - max. kg/h	42 - 233	43 - 272	49 - 365
Power supply		400V 3N ~ 50Hz		
Total power consumption (Heavy oil)	kW	23,6	25,1	33,1
Total power consumption (Petroleum)	kW	11,6	13,1	17,1
Fan motor	kW	4	5.5	7.5
Pump motor	kW	1.1		
Pre-heater resistors (heavy oil)	kW	18	18	24
Pre-heater resistors (Petroleum)	kW	6	6	8
Protection		IP40		
Operation		Progressive - Fully modulating		
Gas Train 50	Valves size / Gas connection	50 / Rp 2”		
Gas Train 65	Valves size / Gas connection	65 / 65		
Gas Train 80	Valves size / Gas connection	80 / 80		
Gas Train 100	Valves size / Gas connection	100 / 100		
Operating temperature	°C	-10 ÷ +50		
Storage Temperature	°C	-20 ÷ +60		
Working service*		Intermittent		

BURNERS		KR512 L-	KR515 L-	KR520 L-	KR525 L-
Output	min. - max. kW	600 - 4500	770 - 5200	1000 - 6400	2000 - 8000
Fuel		LD - L LPG - D Heavy oil, viscosity <= 400cSt (50° E) @ 50° C			
Category		(see next paragraph)			
Gas rate- LPG	min. - max. (Stm^3/h)	22 - 168	29 - 194	37 - 239	75 - 299
Gas pressure	min. - max. mbar	(Note2)			
Viscosity		See “Burner model identification” table			
Oil train inlet pressure	max. bar	4			
Heavy oil rate	min. - max. kg/h	53 - 401	69 - 463	89 - 570	178 - 713
Power supply		400V 3N ~ 50Hz			
Total power consumption (Heavy oil)	kW	35,2	43	59,7	69,2
Total power consumption (Petroleum)	kW	19,2	23	31,7	37,2
Fan motor	kW	9,2	11	15	18,5
Pump motor	kW	1,5	1,5	2,2	2,2
Pre-heater resistors (heavy oil)	kW	24	30	42	48
Pre-heater resistors (Petroleum)	kW	8	10	14	16
Protection		IP40			
Operation		Progressive - Fully modulating			
Gas Train 50	Valves size/ Gas connection	50 / Rp 2”			
Gas Train 65	Valves size / Gas connection	65 / 65			
Gas Train 80	Valves size / Gas connection	80 / 80			
Gas Train 100	Valves size / Gas connection	100 / 100			
Operating temperature	°C	-10 ÷ +50			
Storage Temperature	°C	-20 ÷ +60			
Working service*		Intermittent			

Note1:	**All gas flow rates are referred to Stm^3/h (1.013 mbar absolute pressure, 15° C temperature) and are valid for G20 gas (net calorific value H_i = 34.02 MJ / Stm^3);**
Note2:	**Maximum gas pressure = 500mbar (with Siemens VGD or Dungs MultiBloc MBE)** **Minimum gas pressure = see gas curves.**
Note3:	**Burners are suitable only for indoor operation with a maximum relative humidity of 80 %**

Heavy oil net calorific value (Hi): 40.4MJ/kg (average value).

(*) NOTE ON THE WORKING SERVICE: the control box automatically stops after 24h of continuous working. The control box immediately starts up, automatically.

Country and usefulness gas categories

GAS CATEGORY	COUNTRY																								
I_{2H}	AT	ES	GR	SE	FI	IE	HU	IS	NO	CZ	DK	GB	IT	PT	CY	EE	LV	SI	MT	SK	BG	LT	RO	TR	CH
I_{2E}	LU	PL	-	-	-	-	-	-	-	-	-	-	-	-	-	-	-	-	-	-	-	-	-	-	-
$I_{2E(R)B}$	BE	-	-	-	-	-	-	-	-	-	-	-	-	-	-	-	-	-	-	-	-	-	-	-	-
(*) I_{2EK}	NL	-	-	-	-	-	-	-	-	-	-	-	-	-	-	-	-	-	-	-	-	-	-	-	-
I_{2ELL}	DE	-	-	-	-	-	-	-	-	-	-	-	-	-	-	-	-	-	-	-	-	-	-	-	-
I_{2Er}	FR	-	-	-	-	-	-	-	-	-	-	-	-	-	-	-	-	-	-	-	-	-	-	-	-

(*) Only for I_{2EK} : the appliance was configured for the appliance category K (I2K) and is suitable for the use of G and G+ distribution gases according to the specifications as included in the NTA 8837:2012 Annex D with a Wobbe index of 43.46 – 45.3 MJ/m3 (dry, 0 °C, upper value) or 41.23 – 42.98 (dry, 15 °C, upper value). This appliance can moreover be converted and/or be calibrated for the appliance category E (I2E). This therefore implies that the appliance "is suitable for G+ gas and H gas or is demonstrably suitable for G+ gas and can demonstrably be made suitable for H gas" within the meaning of the "Dutch Decree of 10 May 2016 regarding amendment of the Dutch Gas Appliances Decree and the Dutch Commodities (Administrative Fines) Act in connection with the changing composition of gas in the Netherlands as well as technical amendment of some other decrees.

Fuel

DANGER! The burner must be used only with the fuel specified in the burner data plate.

Type	--
Model	--
Year	--
S.Number	--
Output	--
Oil Flow	--
Fuel	--
Category	--
Gas Pressure	--
Viscosity	--
El.Supply	--
El.Consump.	--

Overall dimensions (mm)

KP91, KP92, KP93

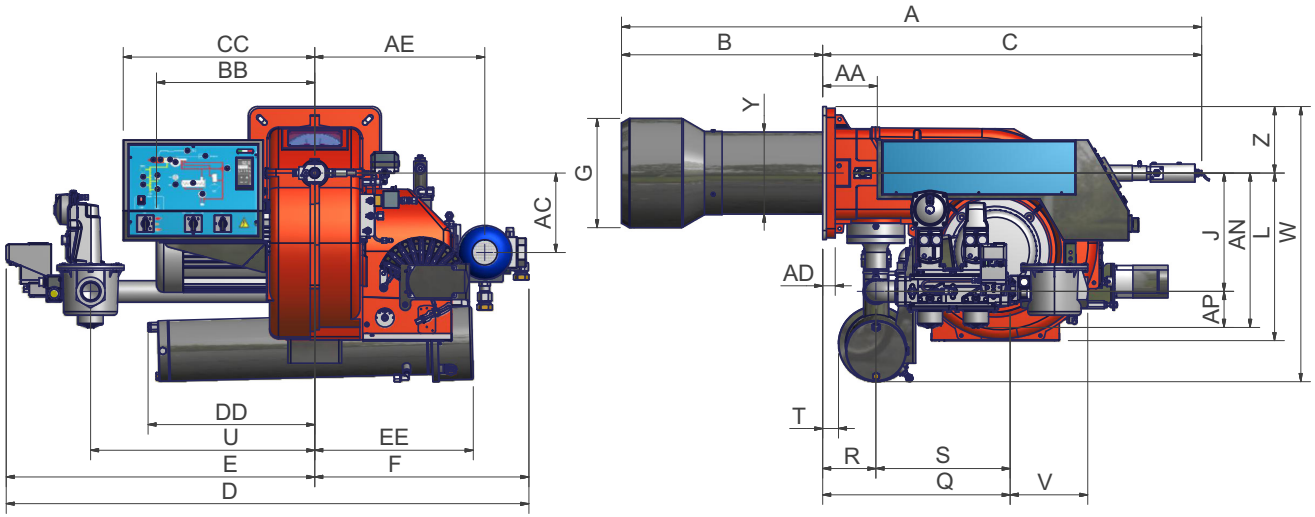

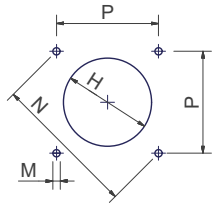

Boiler recommended drilling template

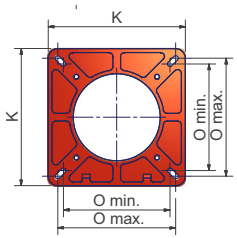

Reccomended burner flange

	DN*	A	AA	AC	AD	AE	AN	AP	B	BB	C	CC	D	DD	E	EE	F	G	H	I	J	K	L	M	N	O min	O max	P	Q	R	S	T	U	V	W	Y	Z
KP91	50	1615	152	221	35	473	429	100	560	441	1055	533	1455	464	859	441	596	304	344	228	329	360	466	M12	424	280	310	300	522	148	374	44	624	216	765	240	185
	65	1615	152	221	35	473	405	117	560	441	1055	533	1553	464	957	441	596	304	344	228	288	360	466	M12	424	280	310	300	632	148	484	44	750	292	765	240	185
	80	1615	152	221	35	473	439	132	560	441	1055	533	1555	464	959	441	596	304	344	228	307	360	466	M12	424	280	310	300	683	148	535	44	750	313	765	240	185
	100	1615	152	221	35	473	592	145	560	441	1055	533	1645	464	1049	441	596	304	344	228	447	360	466	M12	424	280	310	300	790	148	642	44	824	353	765	240	185
KP92	50	1615	152	221	35	473	429	100	560	441	1055	533	1455	464	859	441	596	304	344	228	329	360	466	M12	424	280	310	300	522	148	374	44	624	216	765	240	185
	65	1615	152	221	35	473	405	117	560	441	1055	533	1553	464	957	441	596	304	344	228	288	360	466	M12	424	280	310	300	632	148	484	44	750	292	765	240	185
	80	1615	152	221	35	473	439	132	560	441	1055	533	1555	464	959	441	596	304	344	228	307	360	466	M12	424	280	310	300	683	148	535	44	750	313	765	240	185
	100	1615	152	221	35	473	592	145	560	441	1055	533	1645	464	1049	441	596	304	344	228	447	360	466	M12	424	280	310	300	790	148	642	44	824	353	765	240	185
KP93	50	1550	152	221	35	473	429	100	495	460	1055	533	1455	464	859	441	596	304	344	228	329	360	466	M12	424	280	310	300	522	148	374	44	624	216	765	248	185
	65	1550	152	221	35	473	405	117	495	460	1055	533	1553	464	957	441	596	304	344	228	288	360	466	M12	424	280	310	300	632	148	484	44	750	292	765	248	185
	80	1550	152	221	35	473	439	132	495	460	1055	533	1555	464	959	441	596	304	344	228	307	360	466	M12	424	280	310	300	683	148	535	44	750	313	765	248	185
	100	1550	152	221	35	473	592	145	495	460	1055	533	1645	464	1049	441	596	304	344	228	447	360	466	M12	424	280	310	300	790	148	642	44	824	353	765	248	185

*DN = gas valves size

KR512

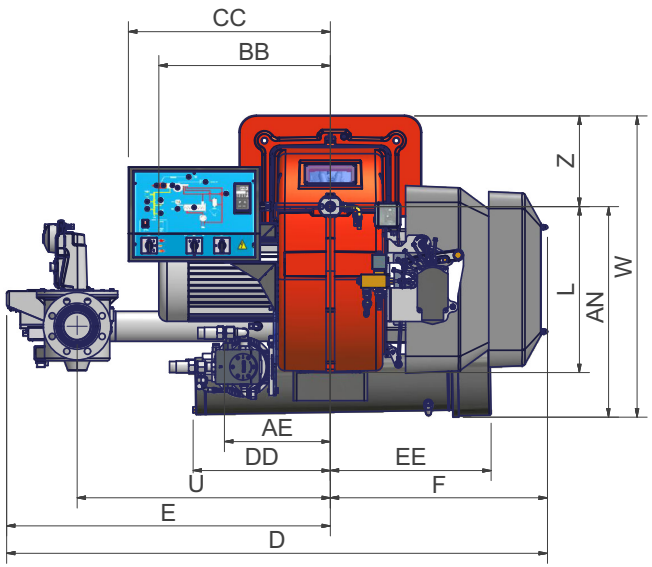

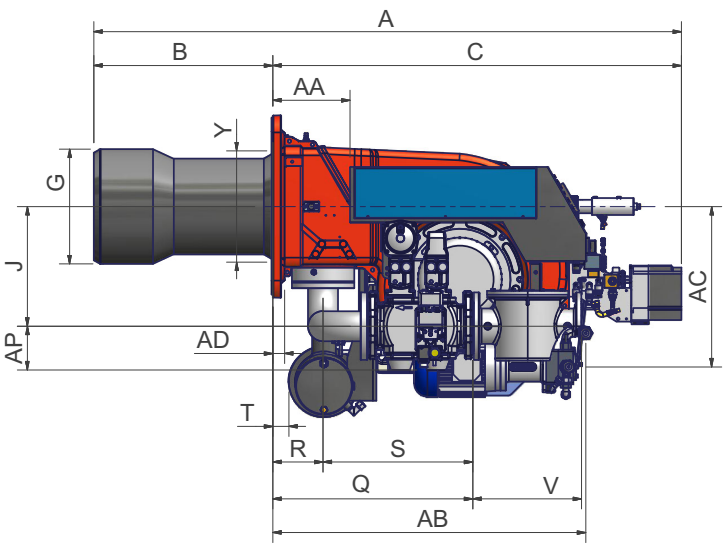

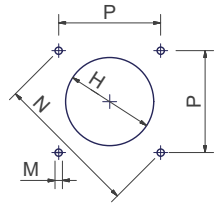

Boiler recommended drilling template

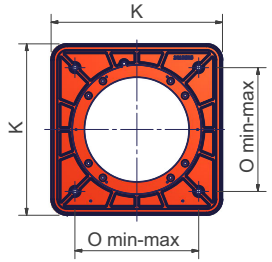

Reccomended burner flange

	DN*	A	AA	AD	AE	AN	AP	B	BB	C	CC	D	DD	E	EE	F	G	H	J	K	L	M	N	O	P	Q	R	S	U	V	W	Y	Z
KR512	50	1766	229	35	313	594	100	555	508	1211	598	1585	407	943	476	642	380	420	354	540	560	M14	552	390	390	755	150	605	843	216	891	328	270
	65	1766	229	35	313	612	118	555	508	1119	598	1609	407	967	476	642	380	420	354	540	560	M14	552	390	390	633	150	483	843	292	891	328	270
	80	1766	229	35	313	626	132	555	508	1119	598	1644	407	1002	476	642	380	420	354	540	560	M14	552	390	390	685	150	535	875	322	891	328	270
	100	1766	229	35	313	639	145	555	508	1119	598	1727	407	1085	476	642	380	420	354	540	560	M14	552	390	390	792	150	642	942	382	891	328	270

*DN = gas valves size

KR515, KR520

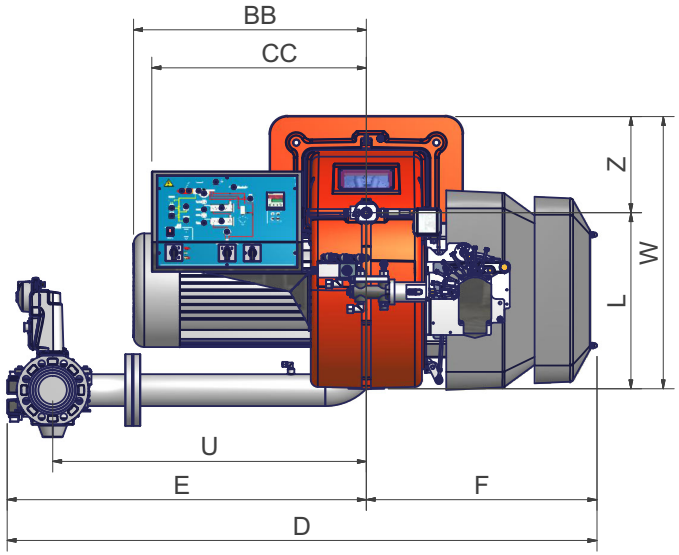

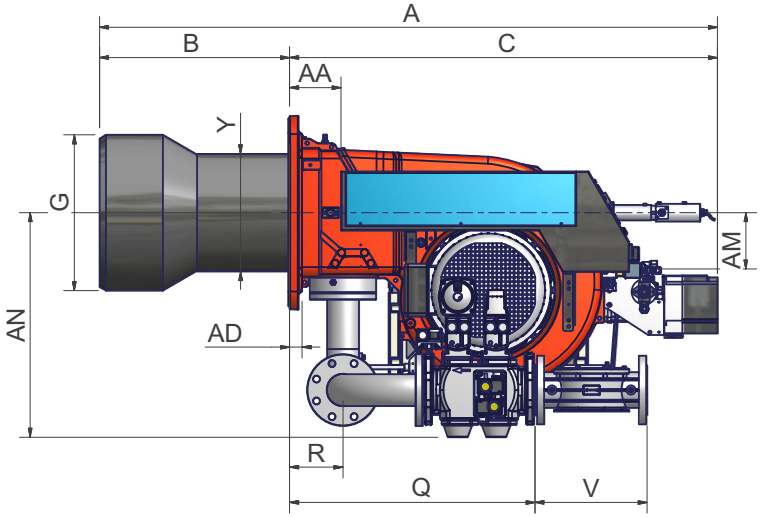

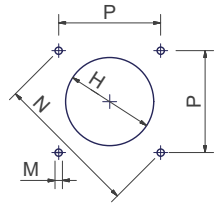

Boiler recommended drilling template

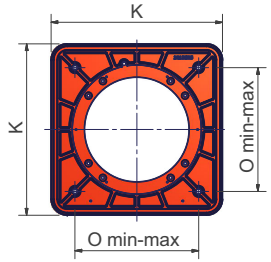

Reccomended burner flange

	DN*	A	AA	AD	AN	AP	B	BB	C	CC	D	E	F	G	H	J	K	L	M	N	O	P	Q	R	S	U	V	W	Y	Z
KR515	50	1676	144	35	594	100	530	508	1146	598	1585	943	642	380	420	494	540	492	M14	552	390	390	755	150	605	843	216	759	328	270
	65	1676	144	35	612	118	530	508	1146	598	1609	967	642	380	420	494	540	492	M14	552	390	390	633	150	483	843	292	759	328	270
	80	1676	144	35	626	132	530	508	1146	598	1644	1002	642	380	420	494	540	492	M14	552	390	390	685	150	535	875	322	759	328	270
	100	1676	144	35	639	145	530	508	1146	598	1727	1085	642	380	420	494	540	492	M14	552	390	390	792	150	642	942	382	759	328	270
KR520	50	1682	144	35	594	100	530	508	1152	598	1585	943	642	434	484	494	540	492	M14	552	390	390	755	150	605	843	216	759	328	270
	65	1682	144	35	612	118	530	508	1152	598	1609	967	642	434	484	494	540	492	M14	552	390	390	633	150	483	843	292	759	328	270
	80	1682	144	35	626	132	530	508	1152	598	1644	1002	642	434	484	494	540	492	M14	552	390	390	685	150	535	875	322	759	328	270
	100	1682	144	35	639	145	530	508	1152	598	1727	1085	642	434	484	494	540	492	M14	552	390	390	792	150	642	942	382	759	328	270

*DN = gas valves size

KR525

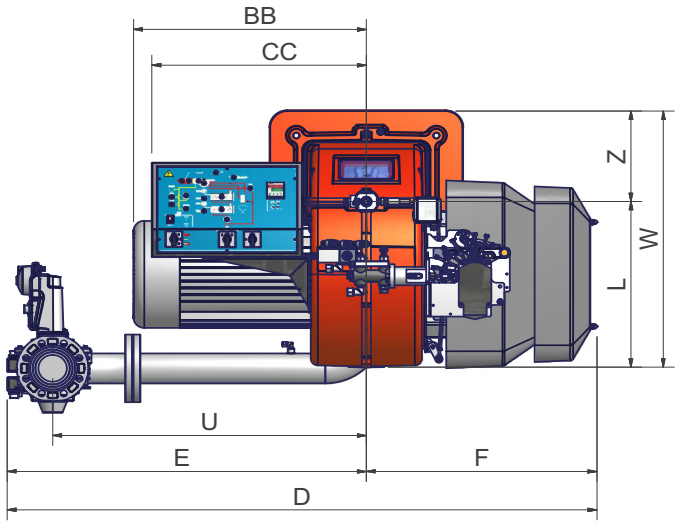

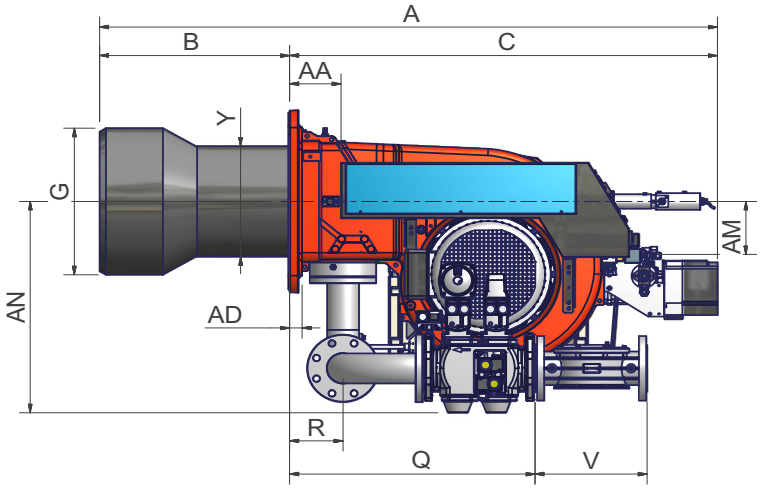

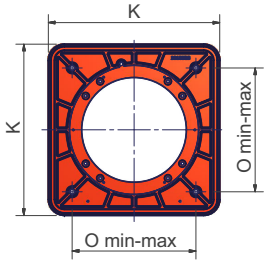

Reccomended burner flange

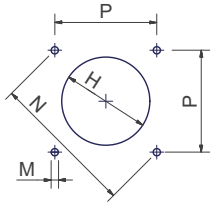

Boiler recommended drilling template

	DN*	A	AA	AD	AN	AP	B	BB	C	CC	D	E	F	G	H	J	K	L	M	N	O	P	Q	R	S	U	V	W	Y	Z
KR525	50	1682	144	35	594	100	530	650	1152	598	1585	943	642	454	504	494	540	492	M14	552	390	390	755	150	605	843	216	759	343	270
	65	1682	144	35	612	118	530	650	1152	598	1609	967	642	454	504	494	540	492	M14	552	390	390	633	150	483	843	292	759	343	270
	80	1682	144	35	626	132	530	650	1152	598	1644	1002	642	454	504	494	540	492	M14	552	390	390	685	150	535	875	322	759	343	270
	100	1682	144	35	639	145	530	650	1152	598	1727	1085	642	454	504	494	540	492	M14	552	390	390	792	150	642	942	382	759	343	270

*DN = gas valves size

If necessary, use a counterflange:

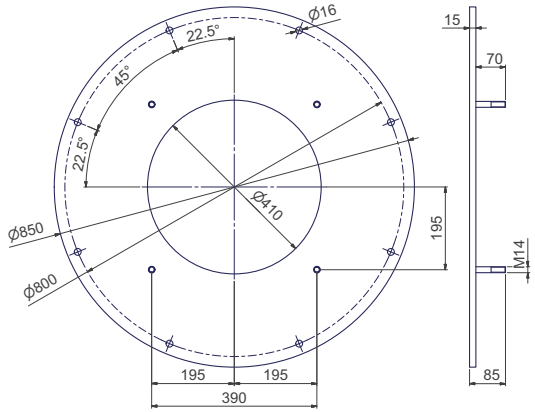

Reccomended counterflange

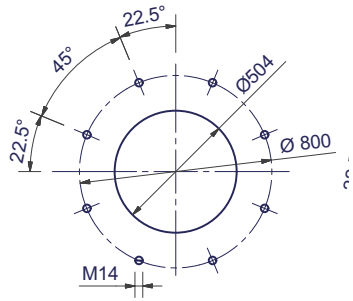

Boiler recommended drilling template (only for burners with counterflange)

ATTENTION: the counterflange is an optional supplied only on request. A gasket must be placed between the generator and the counterflange

Fig. 4 3I2MD11 v1 **Hydraulic diagram**

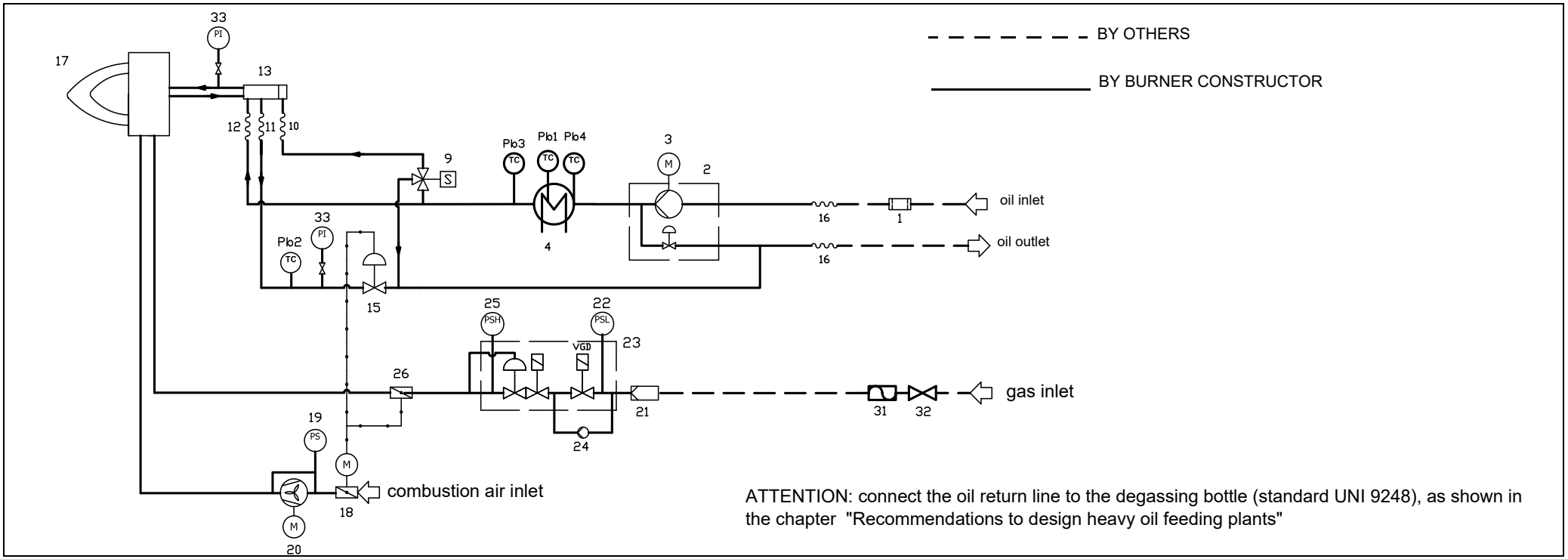

NOTE: POS 25, POS 31, POS 32, POS 33 are optional supply

POS	OIL TRAIN		COMBUSTION AIR TRAIN
1	Filter	18	Air damper with actuator
2	Pump and pressure governor	19	Pressure switch - PA
3	Electrical motor	20	Draught fan with electromotor
33	Pressure gauge with manual valve		**MAIN GAS TRAIN**
4	Electrical preheater tank	21	Filter
Pb4	Temperature probe	22	Pressure switch - PGMIN
Pb1	Temperature probe	23	Safety valve with built in gas governor
Pb3	Temperature probe	24	Proving system
9	3-way solenoid valve	25	Pressure switch - PGMAX
10	Flexible hose	26	Butterfly valve
11	Flexible hose	31	Bellows unit
Pb2	Temperature probe	32	Manual valve
13	Oil distributor		
14	Low thermostat - TCI		
15	Pressure governor		
16	Flexible hose		
17	Burner		

The following items are included only on certain types of burner: 10, 11, 12

Fig. 5 3I2MD15 v1 **Hydraulic diagram**

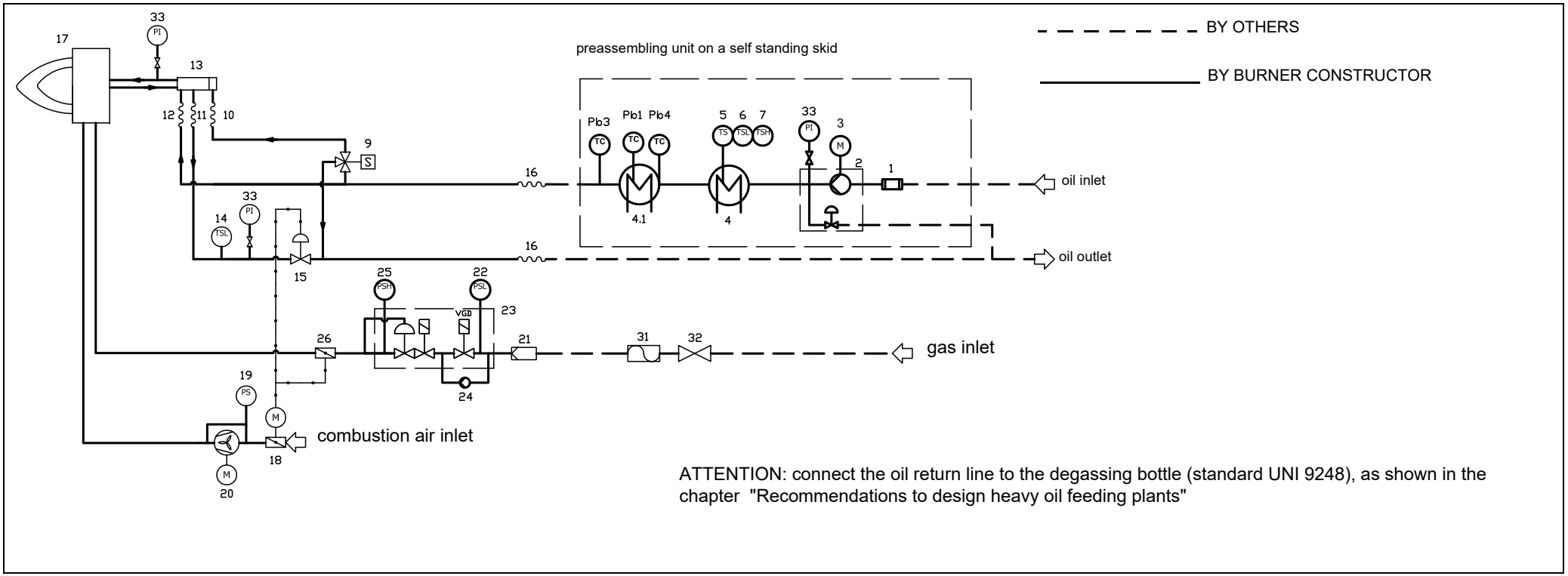

NOTE: The following item are optional supply: 25, 31, 32, 33

POS	OIL TRAIN				COMBUSTION AIR TRAIN
1	Filter	9	3-way solenoid valve	18	Air damper with actuator
2	Pump and pressure governor	10	Flexible hose	19	Pressure switch - PA
3	Electrical motor	11	Flexible hose	20	Draught fan with electromotor
33	Pressure gauge with manual valve	12	Flexible hose		**MAIN GAS TRAIN**
4	Electrical preheater tank	13	Oil distributor	21	Filter
4.1	Electrical preheater tank	14	Low thermostat - TCI	22	Pressure switch - PGMIN
5	Thermostat - TR	15	Pressure governor	23	Safety valve with built in gas governor
6	Low thermostat - TCN	16	Flexible hose	24	Controllo di tenuta
7	High thermostat - TRS	17	Burner	25	Pressure switch - PGMAX
Pb4	Temperature probe	33	Pressure switch	26	Butterfly valve
Pb1	Temperature probe			31	Bellows unit
Pb3	Temperature probe			32	Manual valve

How to read the burner "Performance curve"

To check if the burner is suitable for the boiler to which it must be installed, the following parameters are needed:

- furnace input, in kW or kcal/h (kW = kcal/h/860);
- backpressure (data are available on the boiler ID plate or in the user's manual).

Example:

Furnace input: 600kW

Backpressure: 4 mbar

In the "Performance curve" diagram, draw a vertical line matching the furnace input value and an horizontal line matching the backpressure value. The burner is suitable if the intersection point A is inside the performance curve.

Data are referred to standard conditions: atmospheric pressure at 1013 mbar, ambient temperature at 15° C.

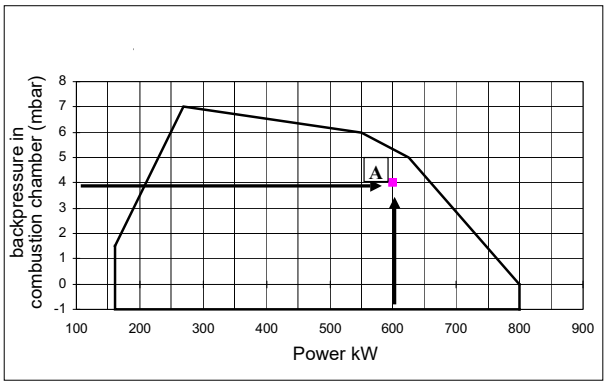

Checking the proper gas train size

To check the proper gas train size, it is necessary to the available gas pressure value upstream the burner's gas valve. Then subtract the backpressure. The result is called **pgas.** Draw a vertical line matching the furnace input value (600kW, in the example), quoted on the x-axis, as far as intercepitng the network pressure curve, according to the installed gas train (DN65, in the example). From the interception point, draw an horizontal line as far as matching, on the y-axis, the value of pressure necessary to get the requested furnace input. This value must be lower or equal to the **pgas** value, calculated before.

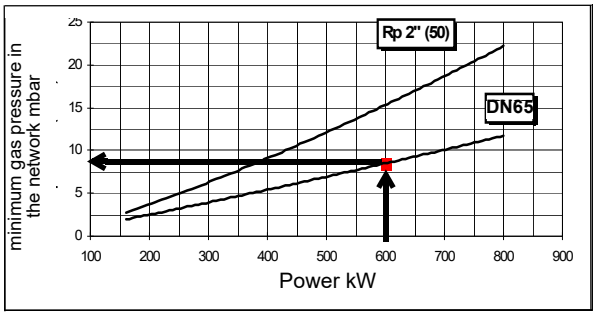

The values in the diagrams refer to **natural gas** with a calorific value of 8125 kcal/Stm^3 (15°C, 1013 mbar) and a density of 0.714 kg/Stm^3 .

The values in the diagrams refer to **GPL** with a calorific value of 22300 kcal/Stm^3 (15°C, 1013 mbar) and a density of 2.14 kg/Stm^3. When the calorific value and the density change, the pressure values should be adjusted accordingly.

$$\Delta p2 = \Delta p1 \quad * \left(\frac{Q2}{Q1}\right)^2 * \left(\frac{\rho 2}{\rho 1}\right)$$

Where:

$p1$	Natural gas pressure shown in diagram
$p2$	Real gas pressure
$Q1$	Natural gas flow rate shown in diagram
$Q2$	Real gas flow rate
$\rho 1$	Natural gas density shown in diagram
$\rho 2$	Real gas density

Performance Curves

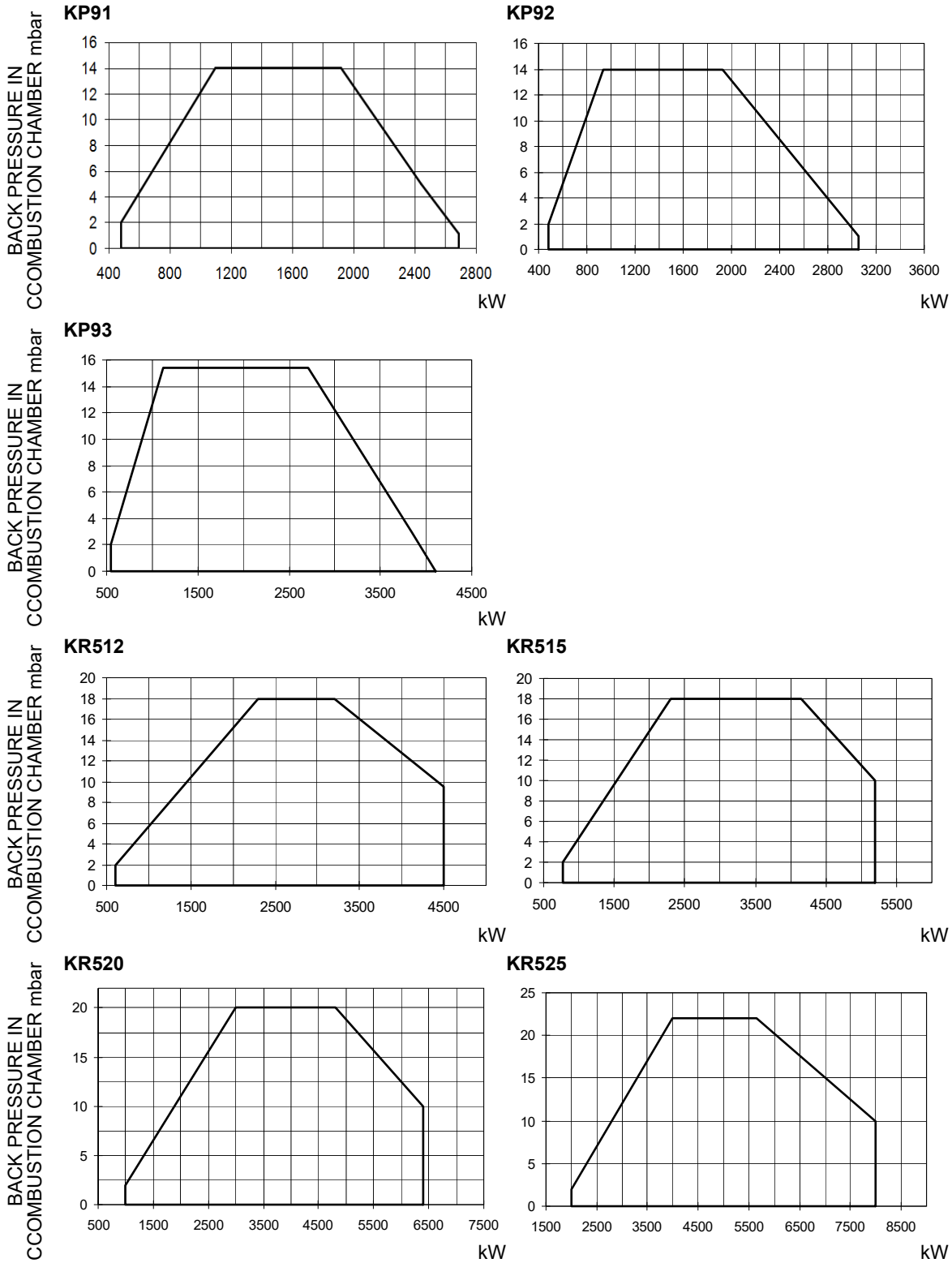

To get the input in kcal/h, multiply value in kW by 860.

Data are referred to standard conditions: atmospheric pressure at 1013mbar, ambient temperature at 15° C

NOTE: The performance curve is a diagram that represents the burner performance in the type approval phase or in the laboratory tests, but does not represent the regulation range of the machine. On this diagram the maximum output point is usually reached by adjsuting the combustion head to its “MAX” position (see paragraph “Adjusting the combustion head”); the minimum output point is reached setting the combustion head to its “MIN” position. During the first ignition, the combustion head is set in order to find a compromise between the burner output and the generator specifications, that is why the minimum output may be different from the Performance curve minimum

Pressure in the network - gas rate curves - natural gas

KP91

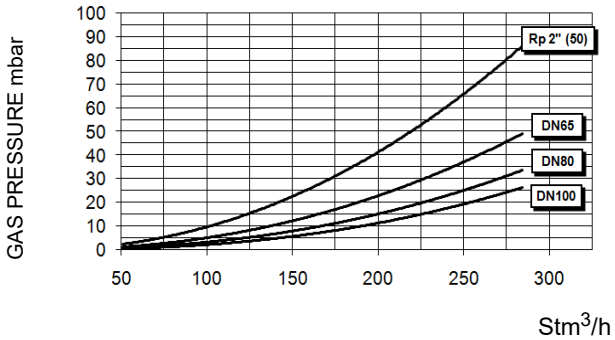

KP92

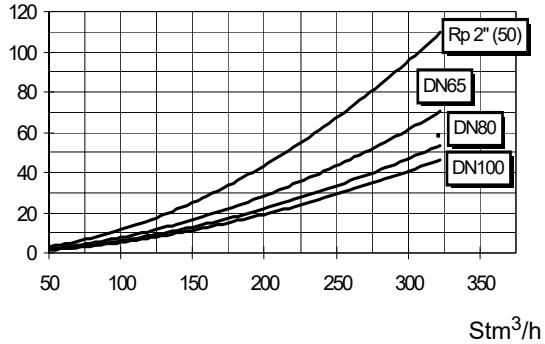

KP93

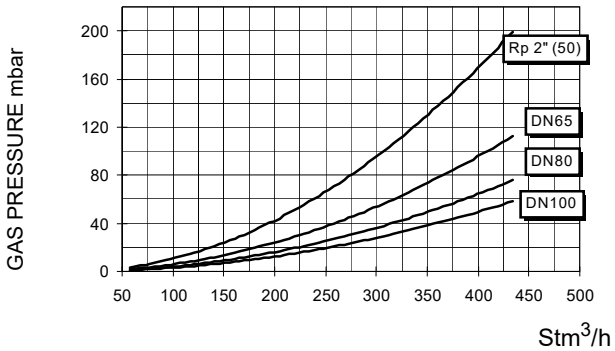

KR512

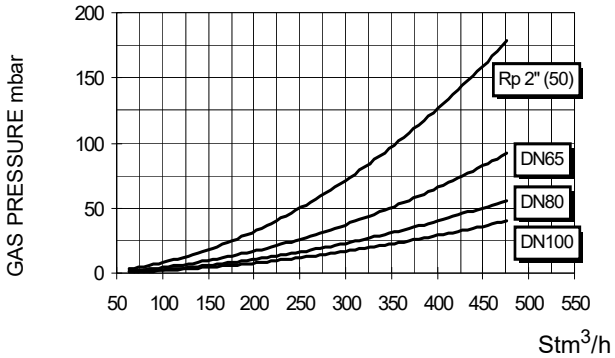

KR515

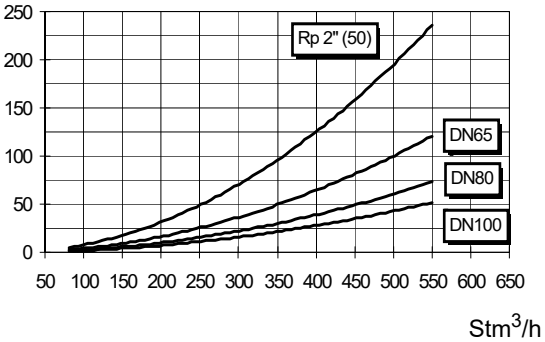

KR520

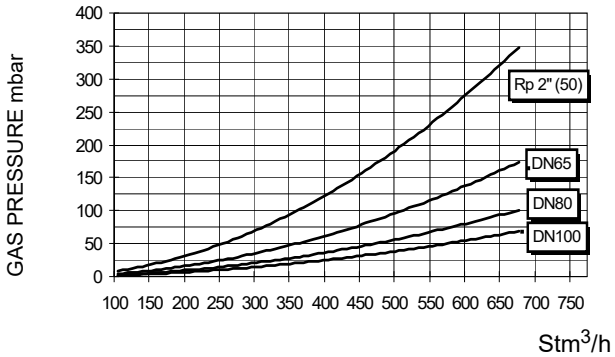

KR525

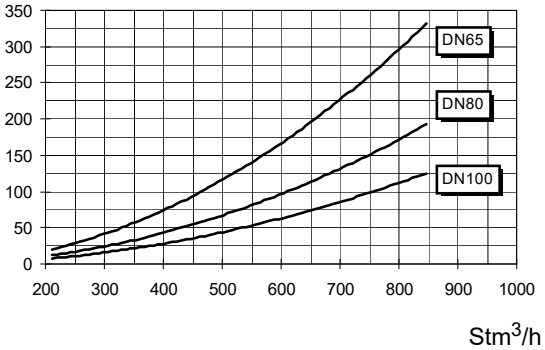

Combustion head gas pressure curves

Combustion head gas pressure depends on gas flow and combustion chamber backpressure. When backpressure is subtracted, i depends only on gas flow, provided combustion is properly adjusted, flue gases residual O2 percentage complies with “Recommendec combustion values” table and CO in the standard limits). During this stage, the combustion head, the gas butterfly valve and the actuator are at the maximum opening. Refer to , showing the correct way to measure the gas pressure, considering the values o pressure in combustion chamber, surveyed by means of the pressure gauge or taken from the boiler’s Technical specifications.
.

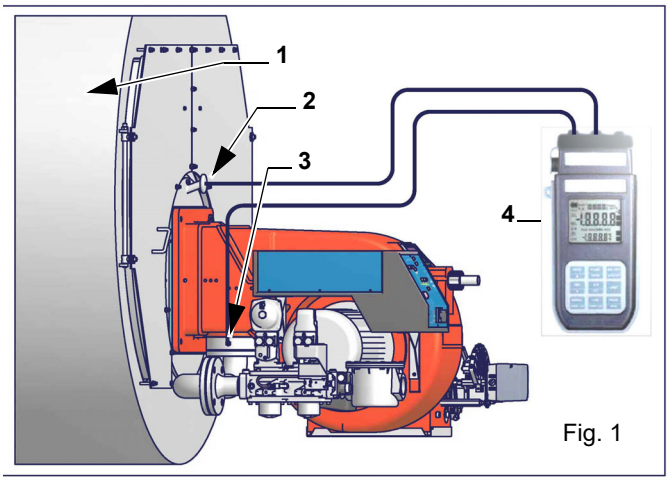

Fig. 1

Note: the figure is indicative only.Key

1 Generator
2 Pressure outlet on the combustion chamber
3 Gas pressure outlet on the butterfly valve
4 Differential pressure gauge

ATTENTION: THE BURNED GAS RATE MUST BE READ AT THE GAS FLOW METER. WHEN IT IS NOT POSSIBLE, THE USER CAN REFERS TO THE PRESSURE-RATE CURVES AS GENERAL INFORMATION ONLY.

Measuring gas pressure in the combustion head

In order to measure the pressure in the combustion head, insert the pressure gauge probes: one into the combustion chamber’s pressure outlet to get the pressure in the combustion chamber and the other one into the butterfly valve’s pressure outlet of the burner. On the basis of the measured differential pressure, it is possible to get the maximum flow rate: in the pressure - rate curves (showed on the next paragraph), it is easy to find out the burner’s output in Stm^3/h (quoted on the x axis) from the pressure measured in the combustion head (quoted on the y axis). The data obtained must be considered when adjusting the gas flow rate.

Рис. 6

The values in the diagrams refer to **natural gas** with a calorific value of 8125 kcal/Stm^3 (15°C, 1013 mbar) and a density of 0.714 kg/Stm^3 .

The values in the diagrams refer to **GPL** with a calorific value of 22300 kcal/Stm^3 (15°C, 1013 mbar) and a density of 2.14 kg/Stm^3. When the calorific value and the density change, the pressure values should be adjusted accordingly.

$$\Delta p2 = \Delta p1 \quad * \left(\frac{Q2}{Q1}\right)^2 * \left(\frac{\rho 2}{\rho 1}\right)$$

Where:

$p1$ Natural gas pressure shown in diagram
$p2$ Real gas pressure
$Q1$ Natural gas flow rate shown in diagram
$Q2$ Real gas flow rate
$\rho 1$ Natural gas density shown in diagram
$\rho 2$ Real gas density

Pressure - rate in combustion head curves (natural gas)

Curves are referred to pressure = 0mbar in the combustion chamber!

KP91

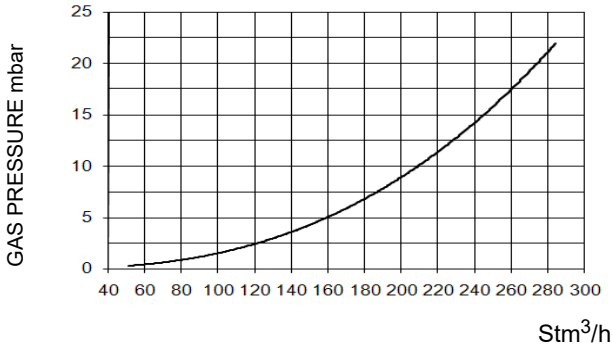

KP92

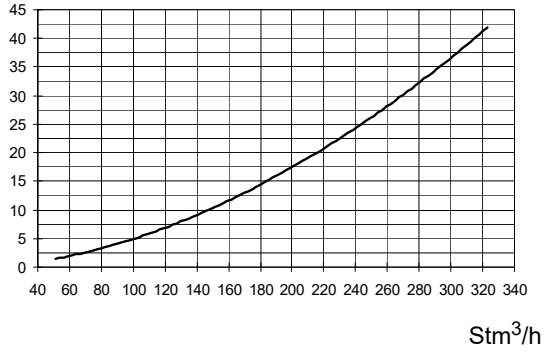

KP93

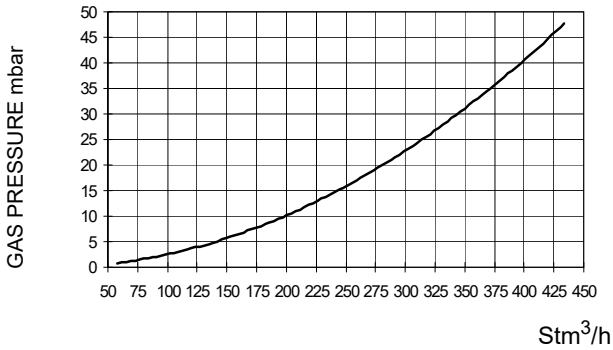

KR512

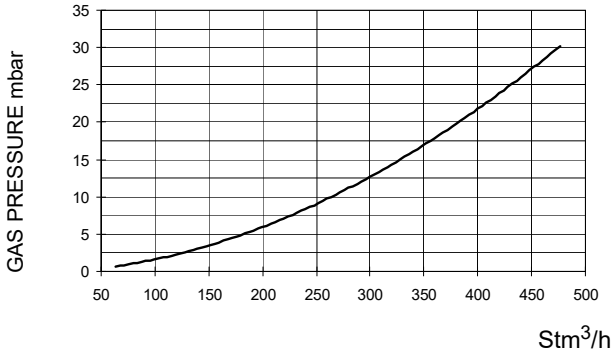

KR515

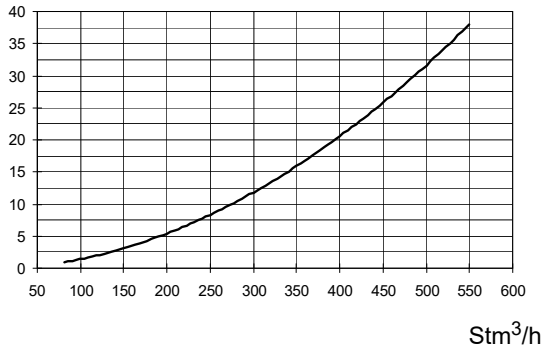

KR520

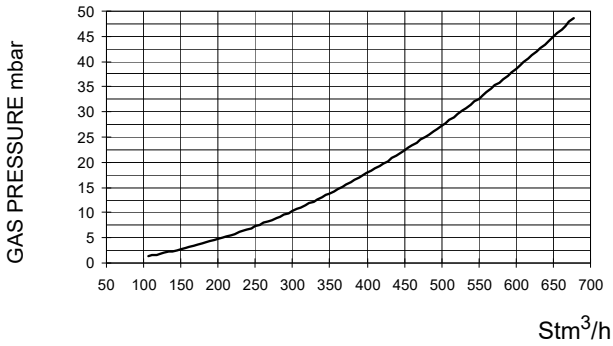

KR525

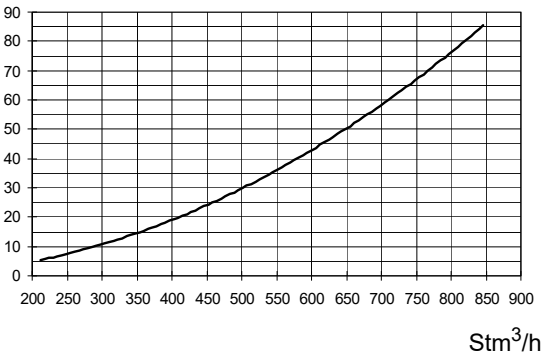

PART II: INSTALLATION

MOUNTING AND CONNECTING THE BURNER

Packing

The burners are despatched wooden cages whose dimensions:
KP91-KP92-KP93: 1730mmx 1280mm x 1020mm (L x P x H)
KR512-KR515-KR520-KR525: 1730mm x 1430mm x 1130mm (L x P x H)

Packing cases of this kind are affected by humidity and are not suitable for stacking. The following are placed in each packing case:

- burner with gas train detached;
- gasket to be inserted between the burner and the boiler;
- envelope containing this manual

To get rid of the burner's packing, follow the procedures laid down by current laws on disposal of materials.

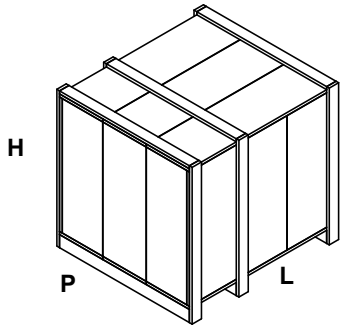

Fig. 1

Handling the burner

WARNING! The handling operations must be carried out by specialised and trained personnel. If these operations are not carried out correctly, the residual risk for the burner to overturn and fall down still persists. To move the burner, use means suitable to support its weight (see paragraph "Technical specifications").
The unpacked burner must be lifted and moved only by means of a fork lift truck.

The burner is mounted on a support provided for handling the burner by means of a fork lift truck: the forks must be inserted into the A anb B ways. Remove the stirrup only once the burner is installed to the boiler.

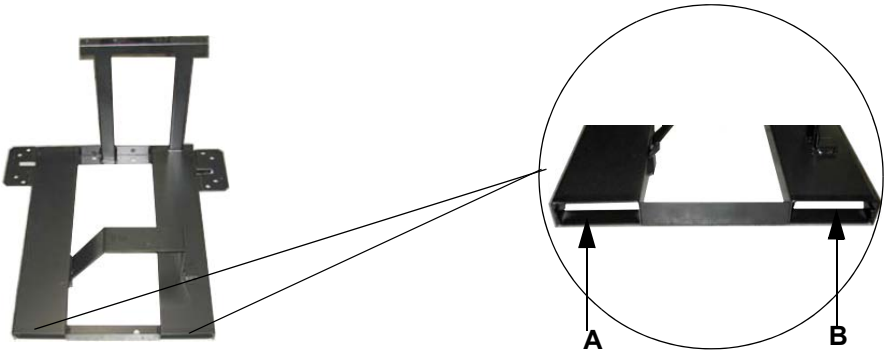

Fitting the burner to the boiler

To install the burner into the boiler, proceed as follows:

1 make a hole on the closing door of the combustion chamber as described on paragraph “Overall dimensions”)
2 place the burner to the boiler: lift it up and handle it according to the procedure described on paragraph “Handling the burner”;
3 place the 4 stud bolts (5) on boiler’s door, according to the burner drilling template described on paragraph “Overall dimensions”;
4 fasten the 4 stud bolts;
5 place the gasket on the burner flange;
6 install the burner into the boiler;
7 fix the burner to the stud bolts, by means of the fixing nuts, according to the next picture.
8 After fitting the burner to the boiler, ensure that the gap between the blast tube and the refractory lining is sealed with appropriate insulating material (ceramic fibre cord or refractory cement).

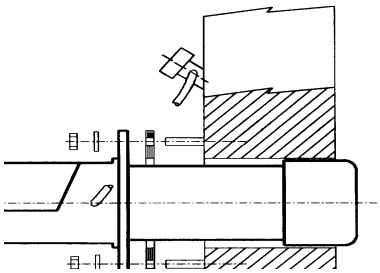

Keys
1 Burner
2 Fixing nut
3 Washer
4 Sealing gasket
5 Stud bolt
7 Blast tube

Matching the burner to the boiler

The burners described in this manual have been tested with combustion chambers that comply with EN676 regulation and whose dimensions are described in the diagram . In case the burner must be coupled with boilers with a combustion chamber smaller in diameter or shorter than those described in the diagram, please contact the supplier, to verify that a correct matching is possible, with respect of the application involved. To correctly match the burner to the boiler verify the type of the blast tube . Verify the necessary input and the pressure in combustion chamber are included in the burner performance curve; otherwise the choice of the burner must be revised consulting the burner manufacturer. To choose the blast tube lenght follow the instructions of the boiler manufacturer. In absence of these consider the following:

- Cast-iron boilers, three pass flue boilers (with the first pass in the rear part): the blast tube must protrude no more than **Dist** = 100 mm into the combustion chamber. (Fig. 2)
- Pressurised boilers with flame reversal: in this case the blast tube must penetrate **Dm** 50 ÷ 100 mm into combustion chamber in respect to the tube bundle plate.(Fig. 3)

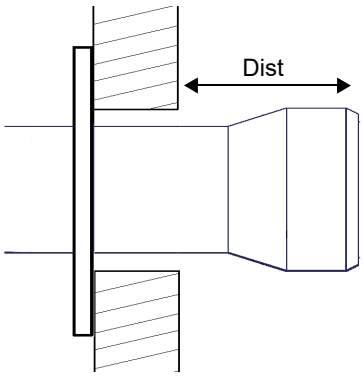

Fig. 2

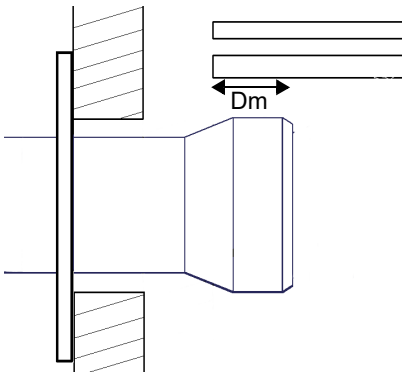

Fig. 3

The length of the blast tubes does not always allow this requirement to be met, and thus it may be necessary to use a suitably-sized spacer to move the burner backwards or to design a blast tube tha suites the utilisation (please, contact the manifacturer).

GAS TRAIN CONNECTIONS

The diagrams show the components of the gas train included in the delivery and which must be fitted by the installer.The diagrams are in compliance with the current laws.

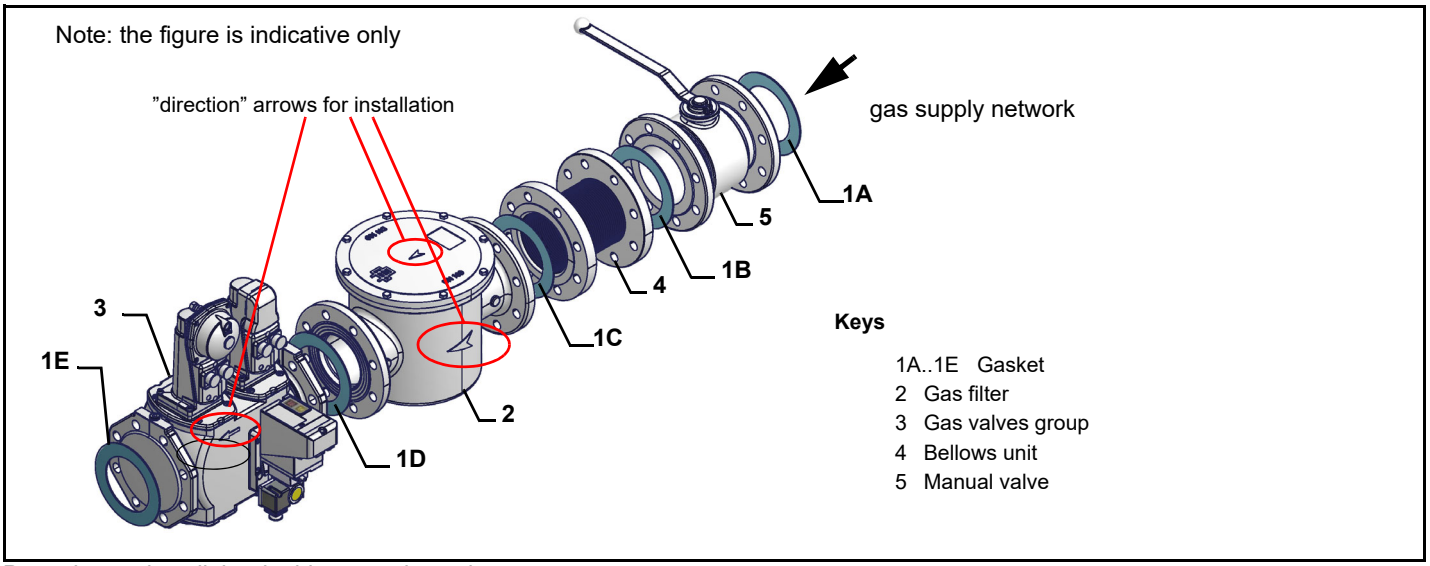

Procedure to install the double gas valve unit:

- **two (2) gas flanges are required; they may be threaded or flanged depending on size**
- **first step: install the flanges to prevent entry of foreign bodies in the gas line**
- **on the gas pipe, clean the already assembled parts and then install the valve unit**
- **check gas flow direction: it must follow the arrow on the valve body**
- **VGD20: make sure the O-rings are correctly positioned between the flanges and the valve**
- **VGD40 and MBE: make sure the gaskets are correctly positioned between the flange**
- **fasten all the components with screws, according to the following diagrams**
- **make sure bolts on the flanges are properly tightened**

WARNING: before executing the connections to the gas pipe network, be sure that the manual cutoff valves are closed.

ATTENTION: it is recommended to mount filter and gas valves to avoid that extraneous material drops inside the valves, during maintenance and cleaning operation of the filters (both the filters outside the valves group and the ones built-in the gas valves).

ATTENTION: once the gas train is mounted, the gas proving test must be performed, according to the procedure set by laws in force.

To mount the gas train, proceed as follows:

-

1 In case of threaded joints: use proper seals according to the gas used- in case of flanged joints: place a gasket between the elements

2 Fasten all the items by means of screws, according to the diagrams showed, observing the mounting direction for each item

NOTE: the bellows unit, the manual cutoff valve and the gaskets are not part of the standard supply

MultiBloc MBE

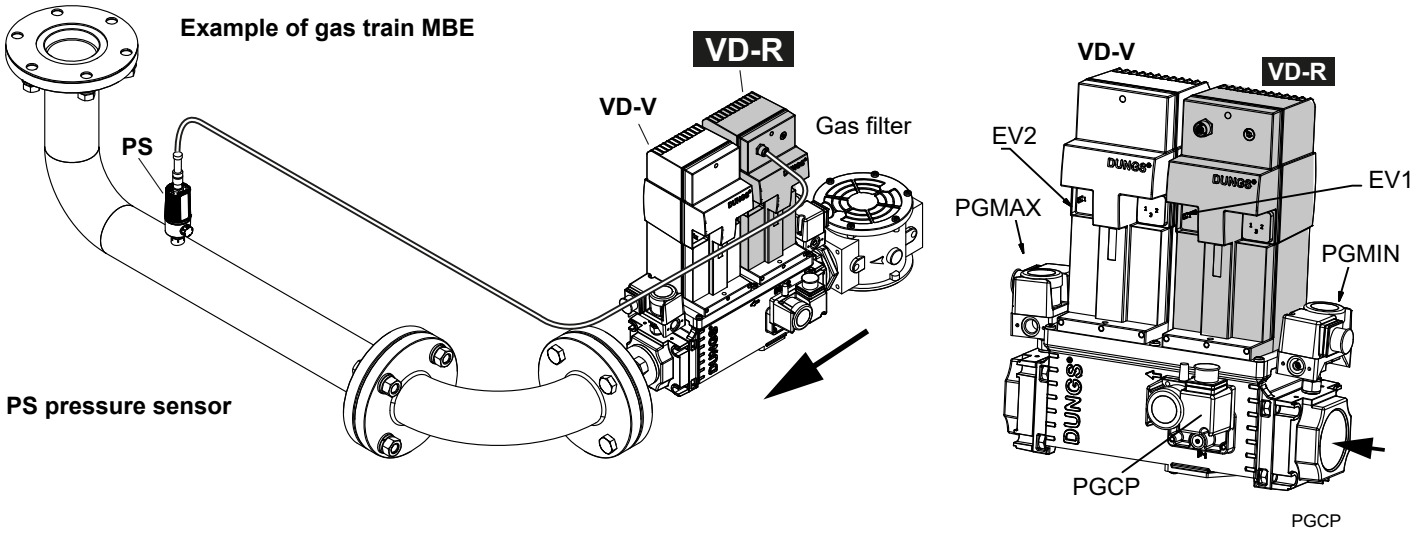

ATTENTION: once the gas train is mounted according, the gas proving test mus be performed, according to the procedure set by the laws in force.

ATTENTION: it is recommended to mount filter and gas valves to avoid that extraneous material drops inside the valves, during maintenance and cleaning operation of the filters (both the filters outside the valves group and the ones built-in the gas valves).

WARNING: Slowly open the fuel cock to avoid breaking the pressure regulator.

Threaded train with MultiBloc MBE - Mounting

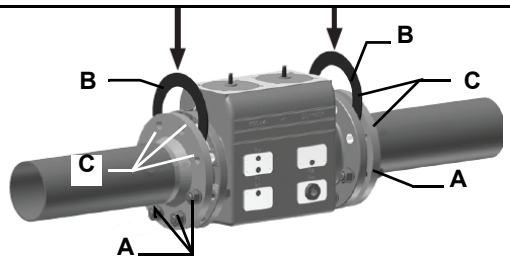

1. Insert studs A.
2. Insert seals B.
3. Insert studs C.
4. Tighten studs in accordance with section 8.

Ensure correct position of the seal!

5. Perform leak and functional tests after mounting.
6. Screws (4xM5x20) for VD assembly are supplied.

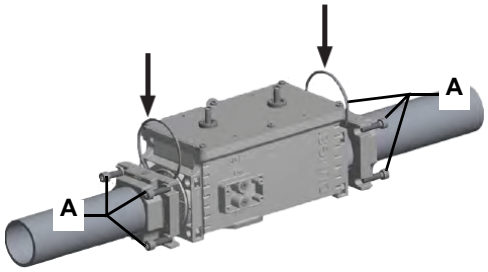

1. Mount flange into pipe systems. Use appropriate sealing agent.
2. Insert VB together with supplied O-rings.
Check current position of O-rings.
3. Tighten supplied screws (8xM8x30) in accordance with section 8.
4. Screws (4xM5x25) for VD assembly are supplied.
5. After installation, perform leakage and functional test.
6. Disassembly in reverse order.

Mounting position MBE / VB / VD

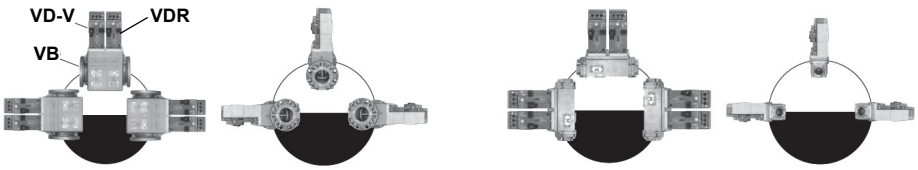

Mounting VD-R & PS-...

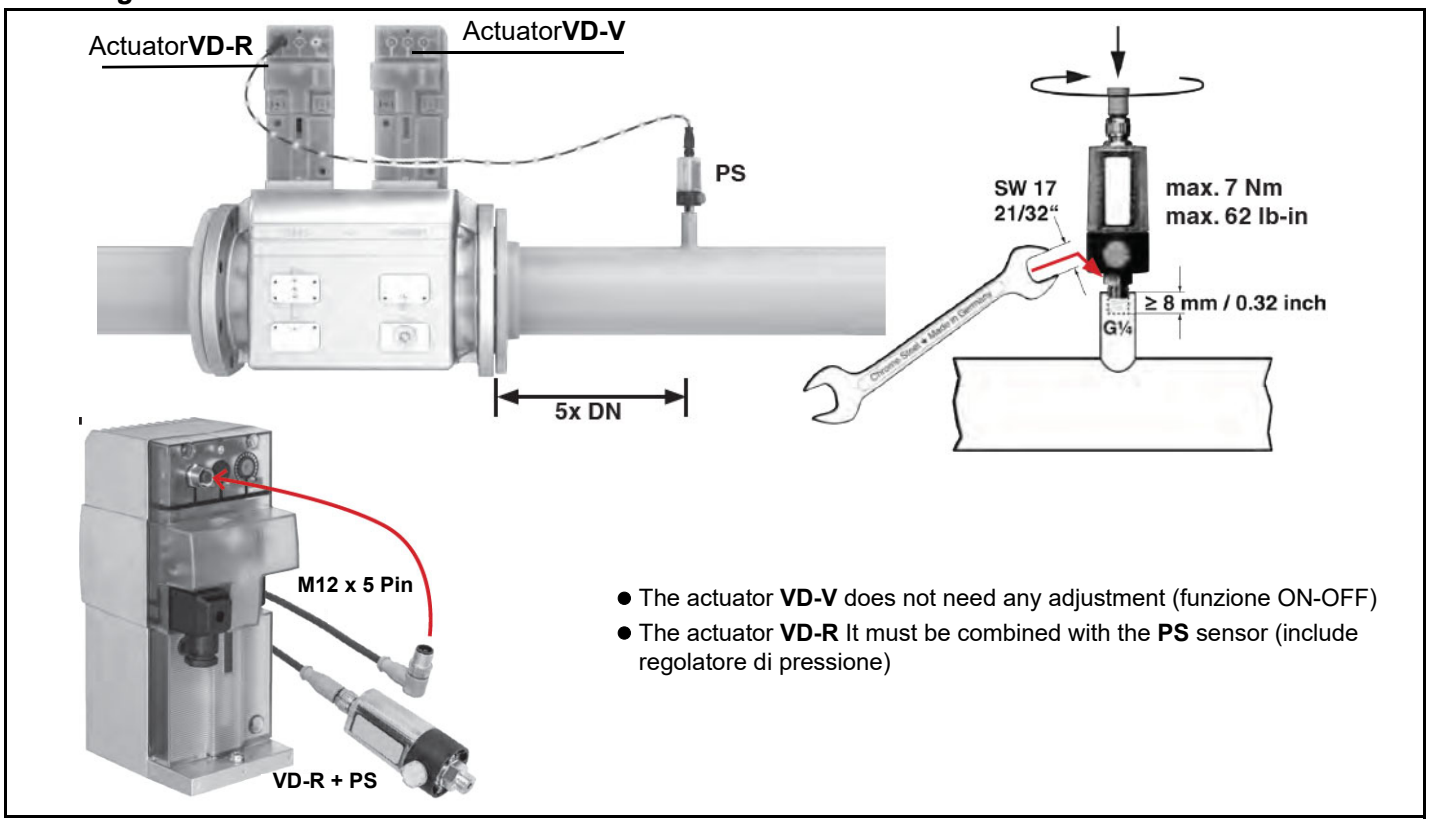

- The actuator **VD-V** does not need any adjustment (funzione ON-OFF)
- The actuator **VD-R** It must be combined with the **PS** sensor (include regolatore di pressione)

1. Gas pressure regulation is possible with VD-R and PS pressure sensor only.
WARNING! For US/CN installation, the output pressure must be monitoried by min. and max. pressure switches set to +/- 20% of the setpoint.
2. Mounting on pipe. Sensor position: 5x DN according to MBE. Pipe fitting with female thread size ¼, mount sensor with seal, observe torque.
3. The pressure sensor includes a vent limiter according to UL 353 and ANSI Z21.18/CSA 6.3. No venting required in locations where vent limiters are accepted by the jurisdiction.
4. Only PS pressure sensors specified by DUNGS are authorised to be connected to the VD-R's M12 interface.
5. Only PS cables specified by DUNGS are authorised to be used to connect the PS to the VD-R. Max. cable length 3 m.

Siemens VGD20.. e VGD40..

Siemens VGD20.. and VGD40.. gas valves - with SKP2.. (pressure governor)

- Connect the reference gas pipe (**TP** in figure; 8mm-external size pipe supplied loose), to the gas pressure nipples placed on the gas pipe, downstream the gas valves: gas pressure must be measured at a distance that must be at least 5 times the pipe size.
- Leave the blowhole free (**SA** in figure). Should the spring fitted not permit satisfactory regulation, ask one of our service centres for a suitable replacement.

Caution: the SKP2 diaphragm D must be vertical

WARNING: removing the four screws BS causes the device to be unserviceable!

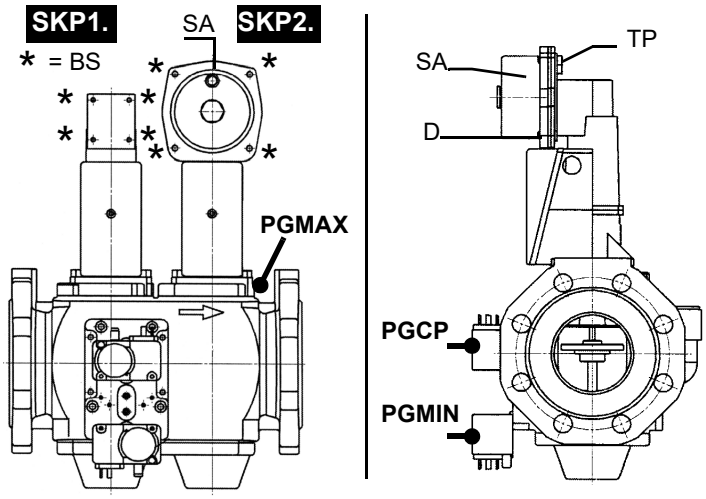

SIEMENS VGD..
Mounting positions

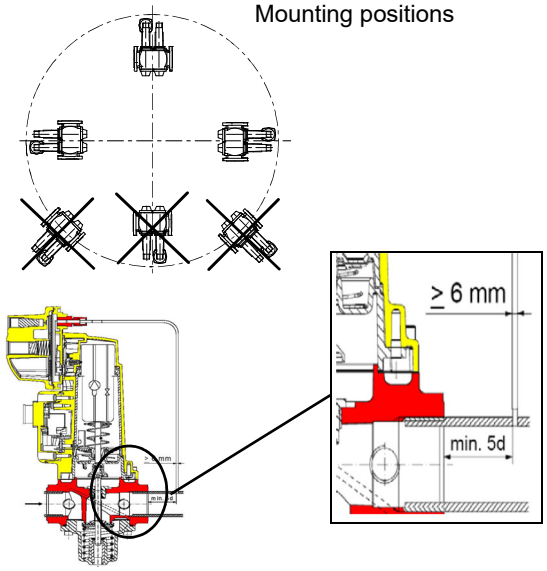

Siemens VGD... con SKPx Example of gas train

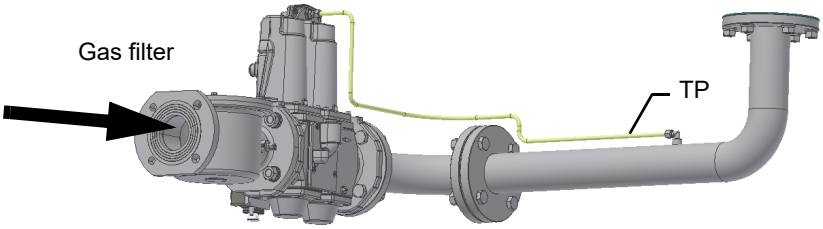

version with SKP2 (built-in pressure stabilizer)

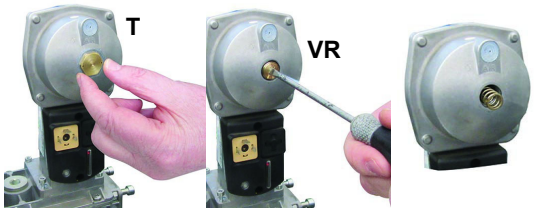

Performance range (mbar)			
	neutral	**yellow**	**red**
Spring colour SKP 25.0	0 ÷ 22	15 ÷ 120	100 ÷ 250
Spring colour SKP 25.4		7 ÷ 700	150 ÷ 1500

Siemens VGD valves with SKP actuator:

The pressure adjusting range, upstream the gas valves group, changes according to the spring provided with the valve group.

To replace the spring supplied with the valve group, proceed as follows:

- Remove the cap (T)
- Unscrew the adjusting screw (VR) with a screwdriver
- Replace the spring

Stick the adhesive label for spring identification on the type plate.

Siemens VGD SKPx5 (Auxiliary-optional micro switch)

Actuator connection

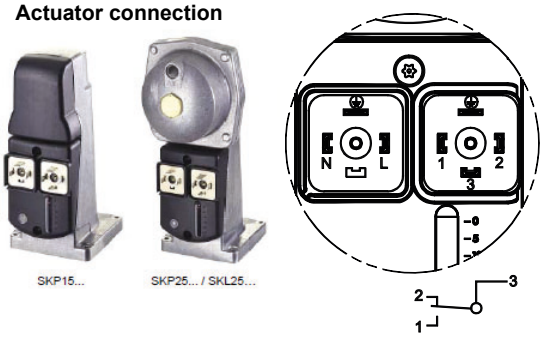

Valve drive
Plug connection

End of stroke
Plug connection

(only with SKPxx.xx1xx)

A Valve closed

Gas valveGas Filter (if provided)

The gas filters remove the dust particles that are present in the gas, and prevent the elements at risk (e.g.: burner valves, counters and regulators) from becoming rapidly blocked. The filter is normally installed upstream from all the control and on-off devices.

ATTENTION: it is reccomended to install the filter with gas flow parallel to the floor in order to prevent dust fall on the safety valve during maintenance operation.

Once the train is installed, connect the gas valves group and pressure switches plugs.

OIL TRAIN CONNECTIONS

About the use of fuel pumps

- Do not use fuel with additives to avoid the possible formation over time of compounds which may deposit between the gear teeth, thus obstructing them.
- After filling the tank, wait before starting the burner. This will give any suspended impurities time to deposit on the bottom of the tank, thus avoiding the possibility that they might be sucked into the pump.
- On initial commissioning a "dry" operation is foreseen for a considerable length of time (for example, when there is a long suction line to bleed). To avoid damages inject some lubrication oil into the vacuum inlet.
- Care must be taken when installing the pump not to force the pump shaft along its axis or laterally to avoid excessive wear on the joint, noise and overloading the gears.
- Pipes should not contain air pockets. Rapid attachment joint should therefore be avoided and threaded or mechanical seal junctions preferred. Junction threads, elbow joints and couplings should be sealed with removable sg component. The number of junctions should be kept to a minimum as they are a possible source of leakage.
- Do not use PTFE tape on the suction and return line pipes to avoid the possibility that particles enter circulation. These could deposit on the pump filter or the nozzle, reducing efficiency. Always use O-Rings or mechanical seal (copper or aluminium gaskets) junctions if possible.
- An external filter should always be installed in the suction line upstream the fuel unit.

***ATTENTION**: before the burner first start, it is mandatory to fill the adduction pipes with diesel fuel and bleed out residual air bubbles. Prior to switching on the burner, check direction of rotation of the pump motor by briefly pressing the starter switch; ensure there are no anomalous sounds during equipment operation, and only then turn on the burner. Neglect to comply with this requirement will invalidate the burner warranty.*

Depending on the installed pump, it is possible to design the plant for single or double pipe feeding line

Single-pipe system: a single pipe drives the oil from the tank to the pump's inlet. Then, from the pump, the pressurised oil is driven to the nozzle: a part comes out from the nozzle while the othe part goes back to the pump. In this system, the by-pass plug, if provided, must be removed and the optional return port, on the pump's body, must be sealed by steel plug and washer.

Double-pipe system: as for the single pipe system, a pipe that connects the tank to the pump's inlet is used besides another pipe that connects the pump's return port to the tank, as well. The excess of oil goes back to the tank: this installation can be considered self-bleeding. If provided, the inside by-pass plug must be installed to avoid air and fuel passing through the pump.

Burners come out from the factory provided for double-pipe systems. They can be suited for single-pipe system (recommended in the case of gravity feed) as decribed before.To change from a 1-pipe system to a 2-pipe-system, insert the by-pass plug **G** (as for ccw-rotation- referring to the pump shaft).

Caution: Changing the direction of rotation, all connections on top and side are reversed.**HP UHE series pumps**: a kit (Art.-Nr.: 0841211) is required for the transition from 2-pipe to 1-pipe system

Suntec TA..	
Oil viscosity	3 ÷ 75 cSt
Oil temperature	0 ÷ 150°C
Min. suction pressure	- 0.45 bar to avoid gasing
Max. suction pressure	5 bar
Max. return pressure	5 bar
Rotation speed	3600 rpm max.

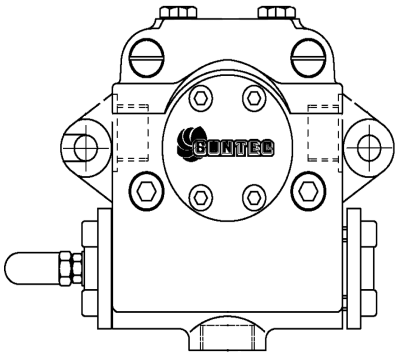

1. Inlet G1/2
2. To the nozzle G1/2
3. Return G1/2
4. Pressure gauge port G1/4
5. Vacuum gauge port G1/4
6. Pressure governor

HP-Technick UHE-A..	
Oil viscosity	3 ÷ 75 cSt
Oil temperature	0 ÷ 150°C
Min. suction pressure	- 0.45 bar to avoid gasing
Max. suction pressure	5 bar
Max. return pressure	5 bar

Rotation speed	3600 rpm max.

1. Connection for manometer 1 – delivery (M1) – G1/4
2. Connection for manometer 2 – suction (M2) – G1/4
3. Connection for manometer 3 (M3)

A. Suction connection– G1/2
D. Direct - clockwise
I. Indirect – counter clockwise
R. By-pass connection– G1/2
S. Delivery connection – G1/2
VR. After removal of cover screw: pressure regulation

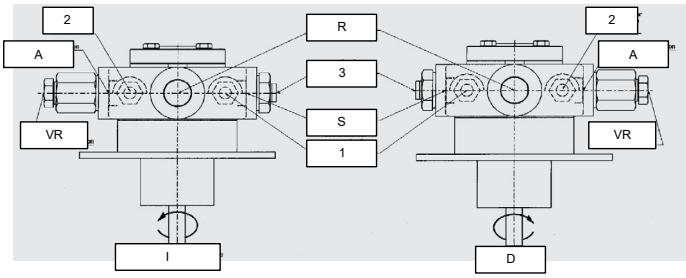

Connecting the oil flexible hoses to the pump

To connect the flexible oil hoses to the pump, proceed as follows, according to the pump provided:

1 remove the closing nuts A and R on the inlet and return connections of the pump;

2 screw the rotating nut of the two flexible hoses on the pump **being careful to avoid exchanging the lines**: see the arrows marked on the pump.

For further information, refer to the technical documentation of the pump.

.

Suntec TA	HP Technik UHE-A
	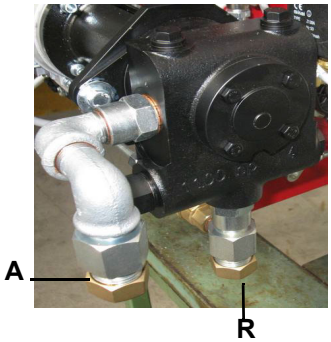

Connecting the burner to the oil pumping unit

KR515, KR520, KR525

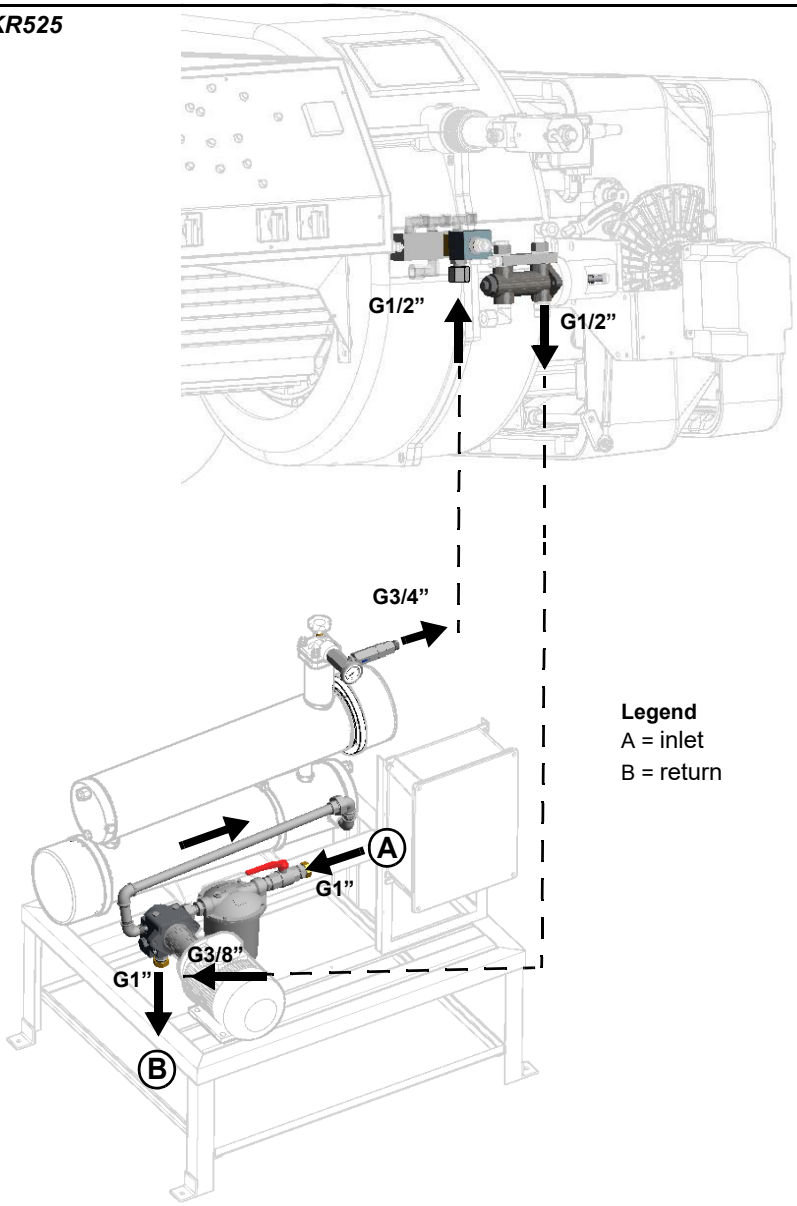

Legend
A = inlet
B = return

PLANT WITH DEGASING BOTTLE

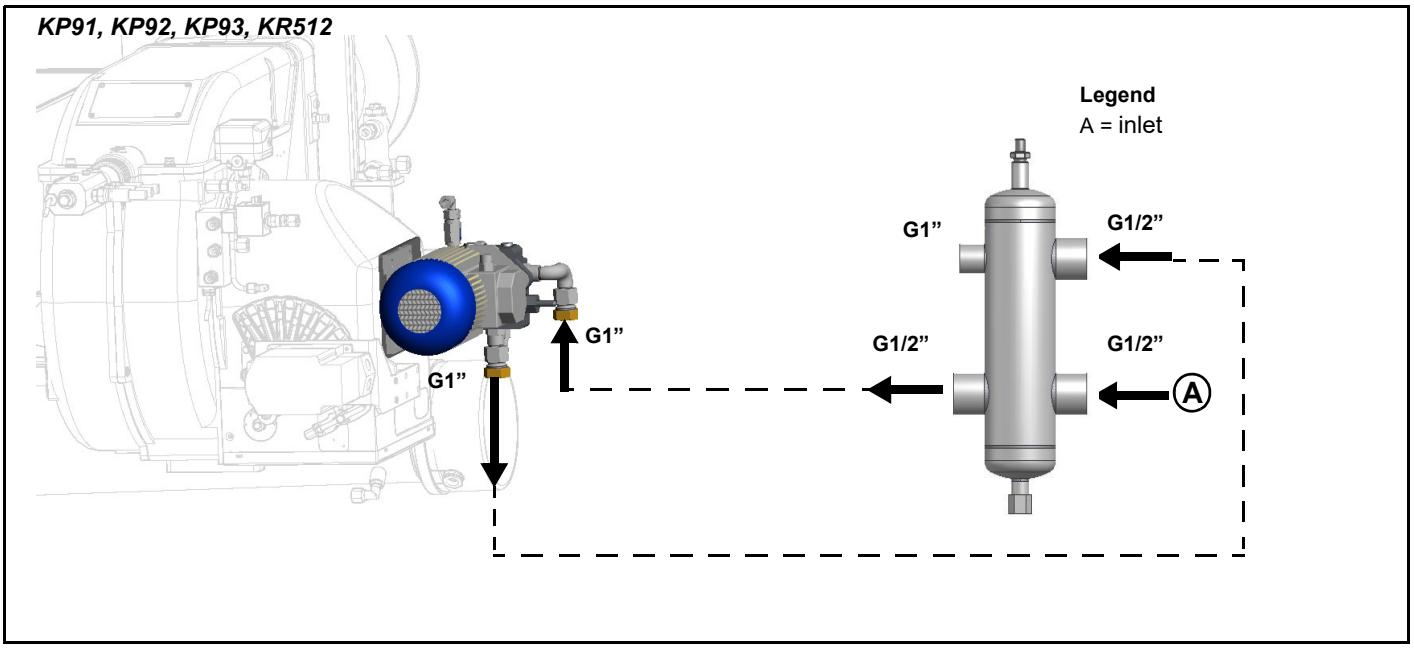

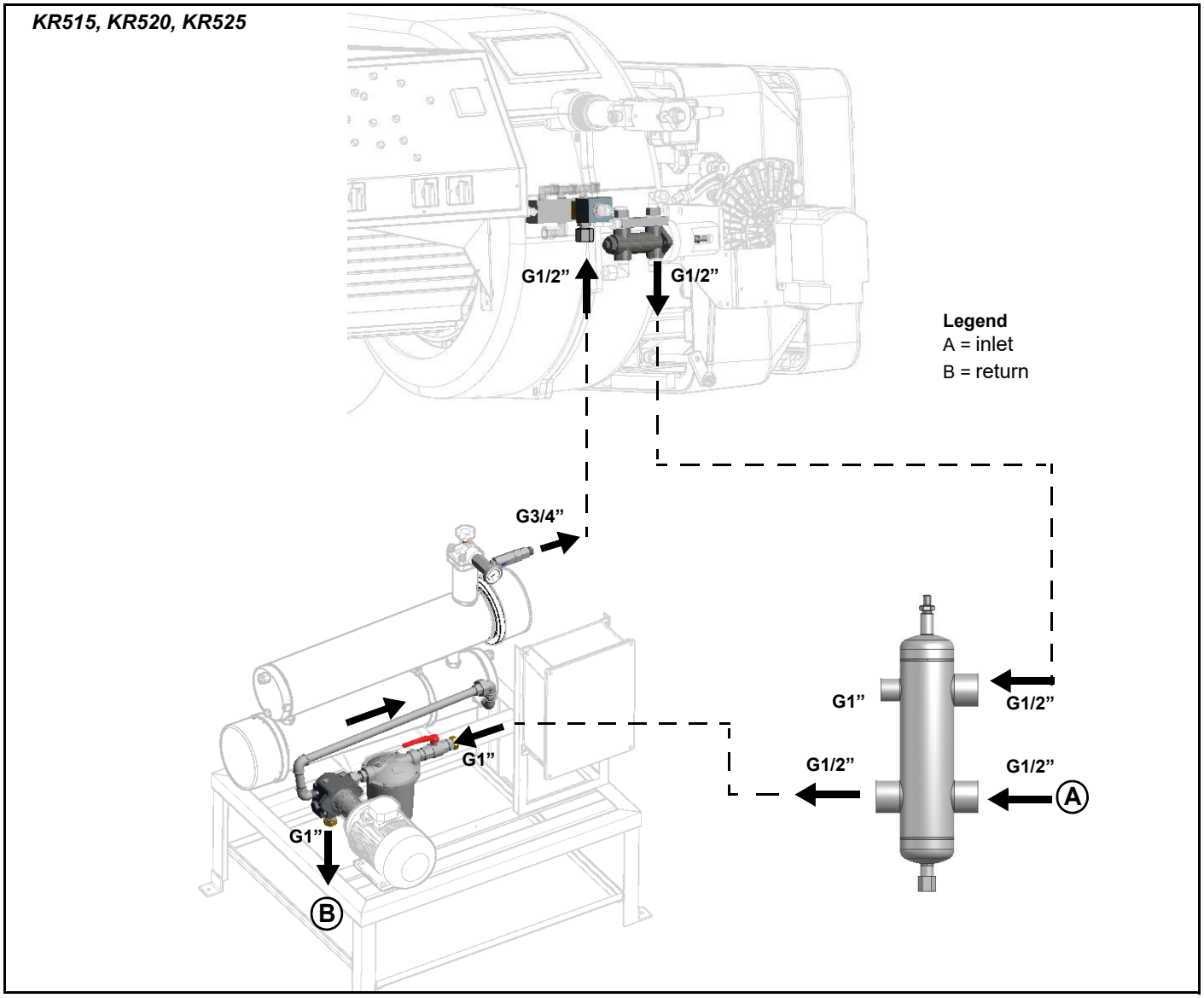

ELECTRICAL CONNECTIONS

WARNING! Respect the basic safety rules. make sure of the connection to the earthing system. do not reverse the phase and neutral connections. fit a differential thermal magnet switch adequate for connection to the mains.

WARNING! before executing the electrical connections, pay attention to turn the plant's switch to OFF and be sure that the burner's main switch is in 0 position (OFF) too. Read carefully the chapter "WARNINGS", and the "Electrical connections" section.

ATTENTION: Connecting electrical supply wires to the burner teminal block MA, be sure that the ground wire is longer than phase and neutral ones.

DANGER! Incorrect motor rotation can seriously damage property and injure people.

To execute the electrical connections, proceed as follows:

1 remove the cover from the electrical board, unscrewing the fixing screws;
2 execute the electrical connections to the supply terminal board as shown in the attached wiring diagrams;
3 check the direction of the fan motor (see next paragraph);
4 refit the panel cover.

WARNING:It is recommended to install a shunt trip disconnect switch that acts on the preheater unit supply line and avoids the oil overheating / resistance damage in case of a malfunction of the resistance contactor. Inside the electric board a free contact is provided (terminals 507 - 508) for this purpose.

Note on elecrtical supply

In the case where the power supply of the AUXILIARIES of the phase-phase burner (without a neutral), for the flame detection it is necessary to connect the RC circuit Siemens between the terminal 2 (terminal X3-04-4 in case of LMV2x, LMV3x, LMV5x, LME7x) of the base and the earth terminal, RC466890660. For LMV5 control box, please refer to the clabeling recommendations avaible on the Siemens CD attached to the burner

Key

C - Capacitor (22 nF , 250 V)
LME / LMV - Siemens control box
R - Resistor (1MΩ)
M: Terminal 2 (LGB, LME), Terminal X3-04-4 (LMV2x, LMV3x, LMV5, LME7x)
RC466890660 - RC Siemens filter

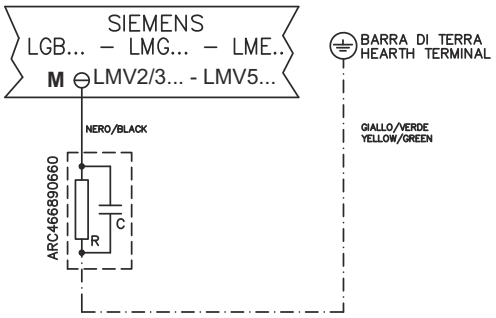

Rotation of electric motor

Once the electrical connection of the burner is executed, remember to check the rotation of the electric motor. The motor should rotate according to the "arrow" symbol on the body. In the event of wrong rotation, reverse the three-phase supply and check again the rotation of the motor.

CAUTION: check the motor thermal cut-out adjustment

NOTE: the burners are supplied for three-phase 380 V or 400 V supply, and in the case of three-phase 220 V or 230 V supply it is necessary to modify the electrical connections into the terminal box of the electric motor and replace the overload tripped relay.

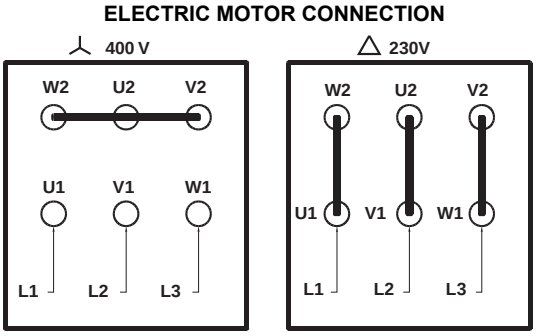

Connecting the oil heating resistors

2.4 - 4.5 kW

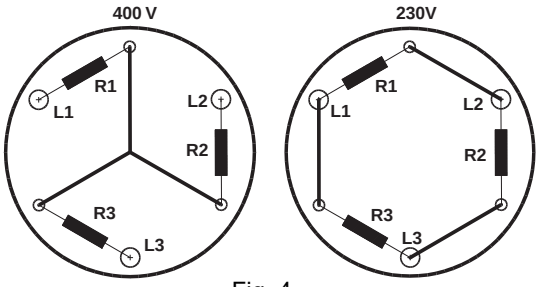

Fig. 4

8 - 12 kW

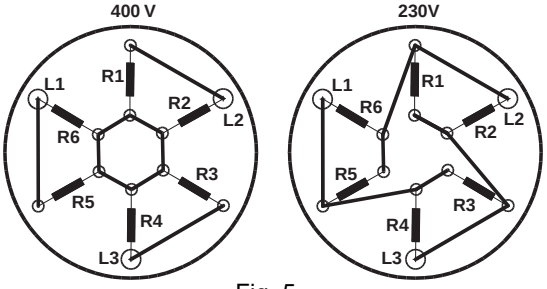

Fig. 5

18 - 24 kW

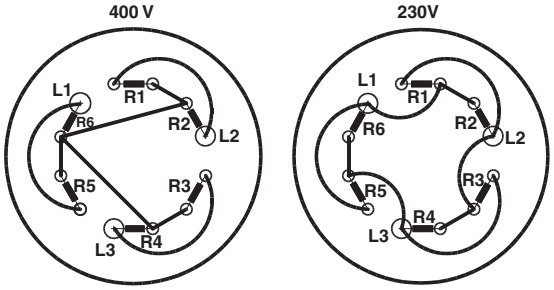

Fig. 6

RECOMMENDATIONS TO DESIGN HEAVY OIL FEEDING PLANTS

This paragraph is intended to give some suggestions to make feeding plants for heavy oil burners. To get a regular burner operation, it is very important to design the supplying system properly. Here some suggestions will be mentioned to give a brief description.

The term “heavy oil” is generic and summarises several chemical-physical properties, above all viscosity. The excessive viscosity makes the oil impossible to be pumped, so it must be heated to let it flow in the pipeline; because of the low-boiling hydrocarbons and dissolved gases, the oil must be also pressurised. The pressurisation is also necessary to feed the burner pump avoiding its cavitation because of the high suction at the inlet. The supplying system scope is to pump and heat oil.

The oil viscosity is referred in various unit measures; the most common are: °E, cSt, Saybolt and Redwood scales. Table 3 shows the-various unit convertions (e.g.: 132 cSt viscosity corresponds to 17.5°E viscosity). The diagram in Fig. 7 shows how the heavy oil viscosity changes according to its temperature.

Example: an oil with 22°E viscosity at 50°C once heated to 100°C gets a 3 °E viscosity.As far as the pumping capability, it depends on the type of the pump that pushes the oil even if on diagram in Fig. 7 a generic limit is quoted at about 100 °E, so it is recommended to refer to the specifications of the pump provided. Usually the oil minimum temperature at the oil pump inlet increases as viscosity does, in order to make the oil easy to pump. Referring to the diagram on Fig. 8, it is possible to realise that to pump an oil with 50°E viscosity at 50°C, it must be heated at about 80°C.

Pipe heating system

Pipe heating system must be provided, that is a system to heat pipes and plant components to mantain the viscosity in the pumping limits. Higher the oil viscosity and lower the ambient temperature, more necessary the pipe heating system.

Inlet minimum pressure of the pump (both for supplying system and burner)

A very low pressure leads to cavitation (signalled by its peculiar noise): the pump manifacturer declares the minimum value. Therefore, check the pump technical sheets. By increasing the oil temperature, also the minimum inlet pressure at the pump must increase, to avoid the gassification of the oil low-boiling products and the cavitation. The cavitation compromises the burner operation, it causes the pump to break too. The diagram on Fig. 9 roughly shows the inlet pump pressure according to the oil temperature.

Pump operating maximum pressure (both for the supplying system and burner)

Remember that pumps and all the system components through which the oil circulates, feature an upper limit. Always read the technical documentation for each component. Schemes on Fig. 5 and Fig. 12 are taken from UNI 9248 "liquid fuel feeding lines from tank to burner" standard and show how a feeding line should be designed. For other countries, see related laws in force. The pipe dimensioning, the execution and the winding dimensioning and other construcitve details must be provided by the installer.

Adjusting the supplying oil ring

According to the heavy oil viscosity used, in the table below indicative temperature and pressure values to be set are shown.

Note: the temperature and pressure range allowed by the supplying ring components must be checked in the specifications table of the components themselves.

HEAVY OIL VISCOSITY AT 50 °C		PIPELINE PRESSURE	PIPELINE TEMPERATURE
cSt (°E)		bar	°C
	< 50 (7)	1- 2	20
> 50 (7)	< 110 (15)	1- 2	50
> 110 (15)	< 400 (50)	1- 2	65

Tab. 1

Viscosity units conversion table

Cinematics viscosity Centistokes (cSt)	Engler Degrees (°E)	Saybolt Seconds Universal (SSU)	Saybolt Seconds Furol (SSF)	Redwood Seconds no.1 (Standard)	Redwood Seconds no..2 (Admiralty)
1	1	31	--	29	--
2.56	1.16	35	--	32.1	--
4.3	1.31	40	--	36.2	5.1
7.4	1.58	50	--	44.3	5.83
10.3	1.88	60	--	52.3	6.77
13.1	2.17	70	12.95	60.9	7.6
15.7	2.45	80	13.7	69.2	8.44
18.2	2.73	90	14.44	77.6	9.3
20.6	3.02	100	15.24	85.6	10.12
32.1	4.48	150	19.3	128	14.48
43.2	5.92	200	23.5	170	18.9
54	7.35	250	28	212	23.45
65	8.79	300	32.5	254	28
87.6	11.7	400	41.9	338	37.1
110	14.6	500	51.6	423	46.2
132	17.5	600	61.4	508	55.4
154	20.45	700	71.1	592	64.6
176	23.35	800	81	677	73.8
198	26.3	900	91	762	83
220	29.2	1000	100.7	896	92.1
330	43.8	1500	150	1270	138.2
440	58.4	2000	200	1690	184.2
550	73	2500	250	2120	230
660	87.6	3000	300	2540	276
880	117	4000	400	3380	368
1100	146	5000	500	4230	461
1320	175	6000	600	5080	553
1540	204.5	7000	700	5920	645
1760	233.5	8000	800	6770	737
1980	263	9000	900	7620	829
2200	292	10000	1000	8460	921
3300	438	15000	1500	13700	--
4400	584	20000	2000	18400	--

Tab. 2

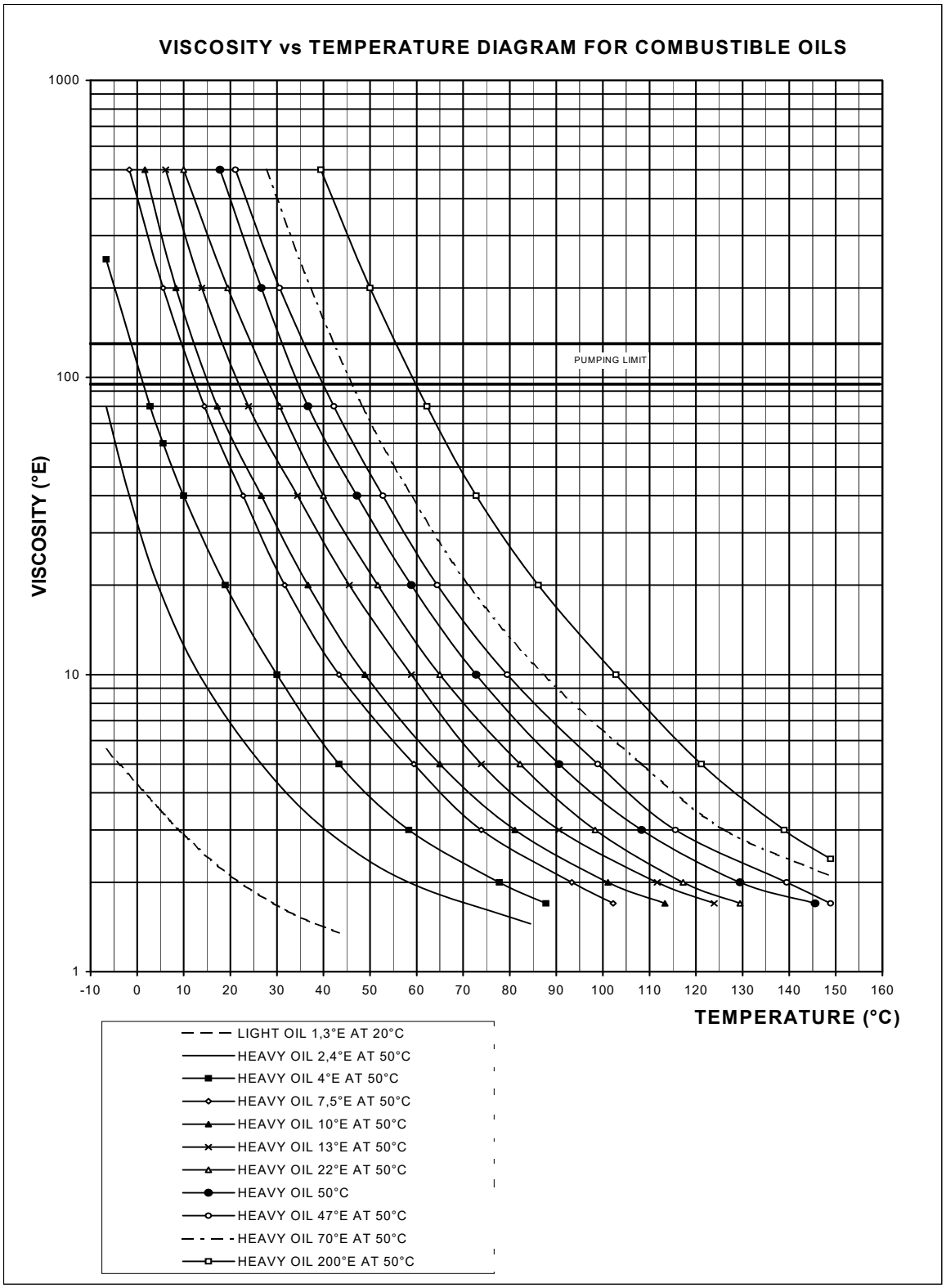
VISCOSITY vs TEMPERATURE DIAGRAM FOR COMBUSTIBLE OILS
VISCOSITY (°E)
1000
100
10
1
PUMPING LIMIT
-10
0
10
20
30
40
50
60
70
80
90
100
110
120
130
140
150
160
TEMPERATURE (°C)
LIGHT OIL 1,3°E AT 20°C
HEAVY OIL 2,4°E AT 50°C
HEAVY OIL 4°E AT 50°C
HEAVY OIL 7,5°E AT 50°C
HEAVY OIL 10°E AT 50°C
HEAVY OIL 13°E AT 50°C
HEAVY OIL 22°E AT 50°C
HEAVY OIL 50°C
HEAVY OIL 47°E AT 50°C
HEAVY OIL 70°E AT 50°C
HEAVY OIL 200°E AT 50°C

Fig. 7

Indicative diagram showing the oil temperature at burner pump inlet vs. oil viscosity

Example: if the oil has a 50°E @ 50°C viscosity, the oil temperature at the pump inlet should be 80°C (see diagram).

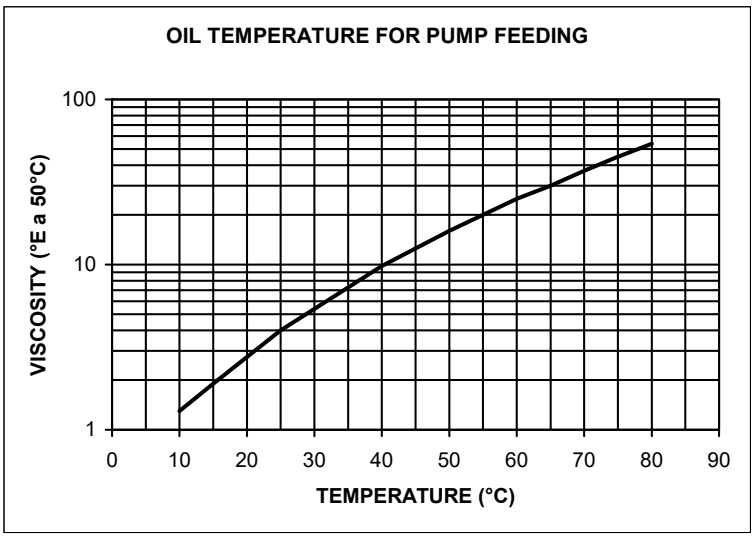

Fig. 8

Indicative diagram showing the oil pressure according to its temperature

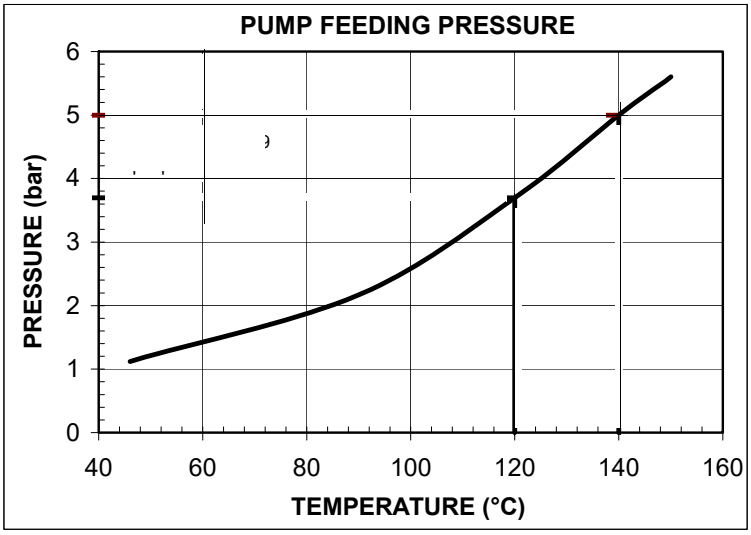

Fig. 9

Indicative diagram showing the oil atomising temperature according to its viscosity

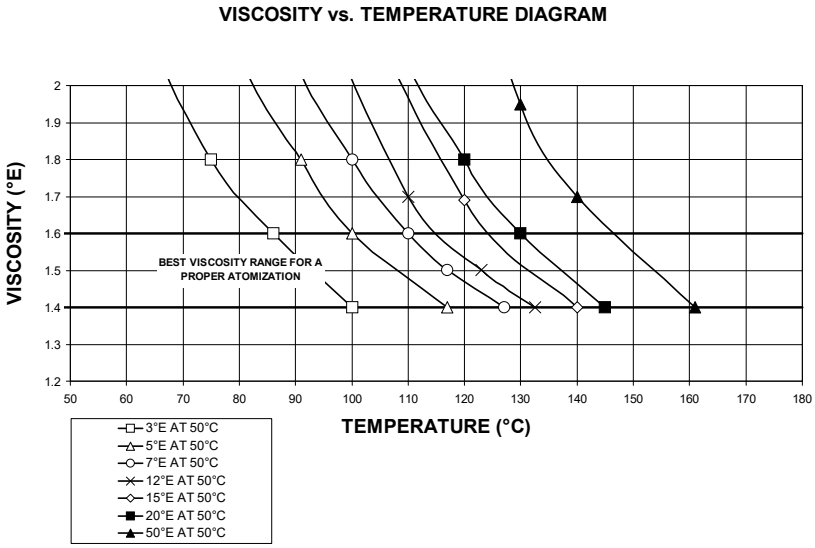

Fig. 10

Example: if the oil has a 50°E @ 50°C viscosity, the oil atomising temperature should be between 145°C and 160°C (see diagram).

Fig. 11 3ID00014 v2 **Hydraulic diagram - Two or more burners configuration**

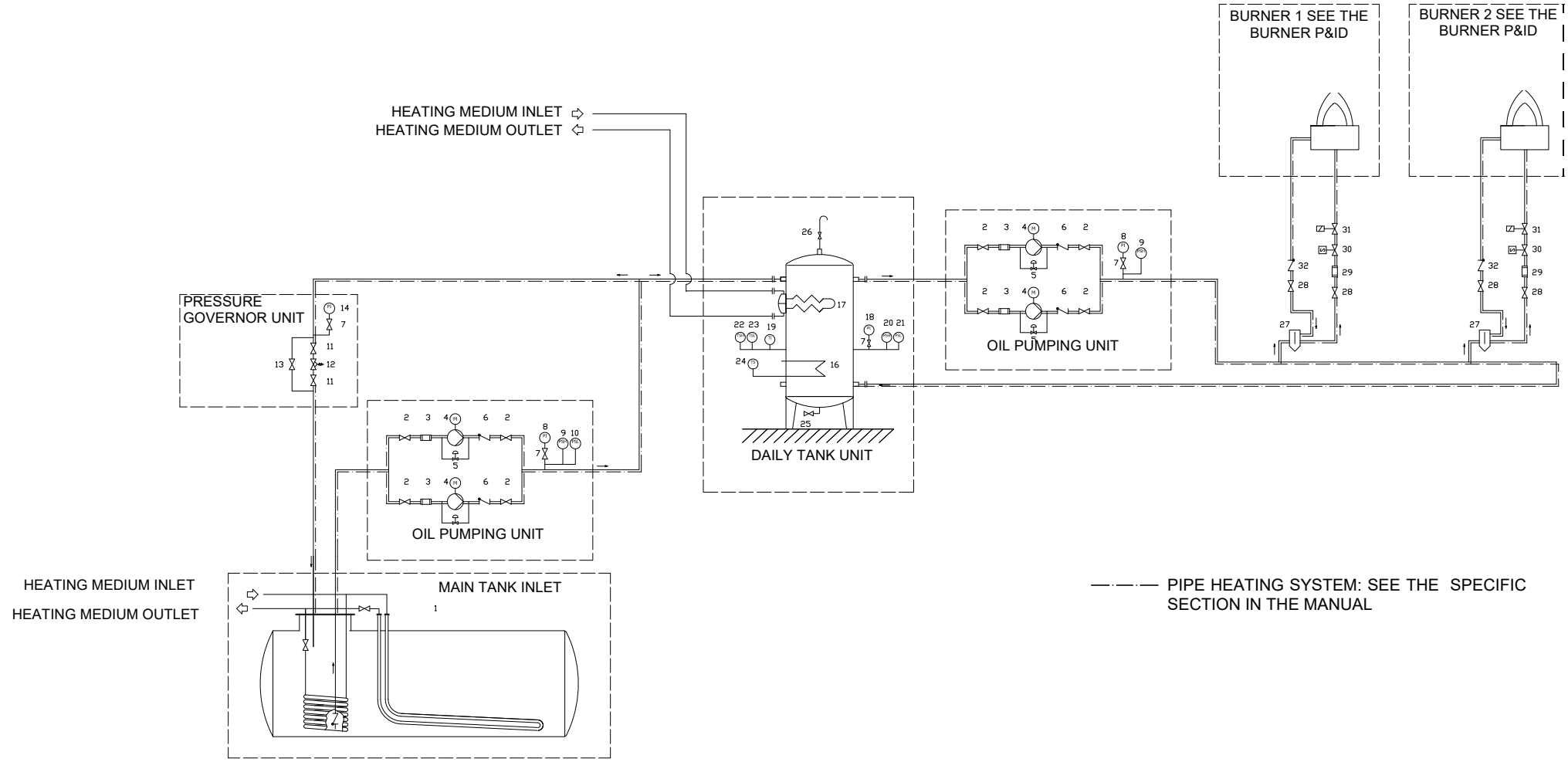

	OIL TRAIN		**PRESSURE GOVERNOR UNIT**				
1	Main tank	11	Manual valve	21	Low pressure switch	31	Safety valve
	OIL PUMPING UNIT	12	Pressure governor	22	Thermostat (high)	32	One-way valve
2	Manual valve	13	Needle valve	23	Thermostat (low)		
3	Filter	14	Pressure gauge	24	Thermostat		
4	Pump coupled to electrical motor		**DAILY TANK**	25	Manual valve		
5	Safety valve	15	Daily tank	26	Manual valve		
6	One-way valve	16	Electrical resistor		**TO THE BURNER**		
7	Manual valve	17	Heating device	27	Degassing bottle		
8	Pressure gauge	18	Pressure gauge	28	Manual valve		
9	Maximum pressure switch	19	Thermometer	29	Filter (supplied loose with the burner)		
10	Minimum pressure switch	20	High pressure switch	30	Solenoide valve		

Fig. 12 - 3ID0023 v2 - **Hydraulic diagram - Single burner configuration**

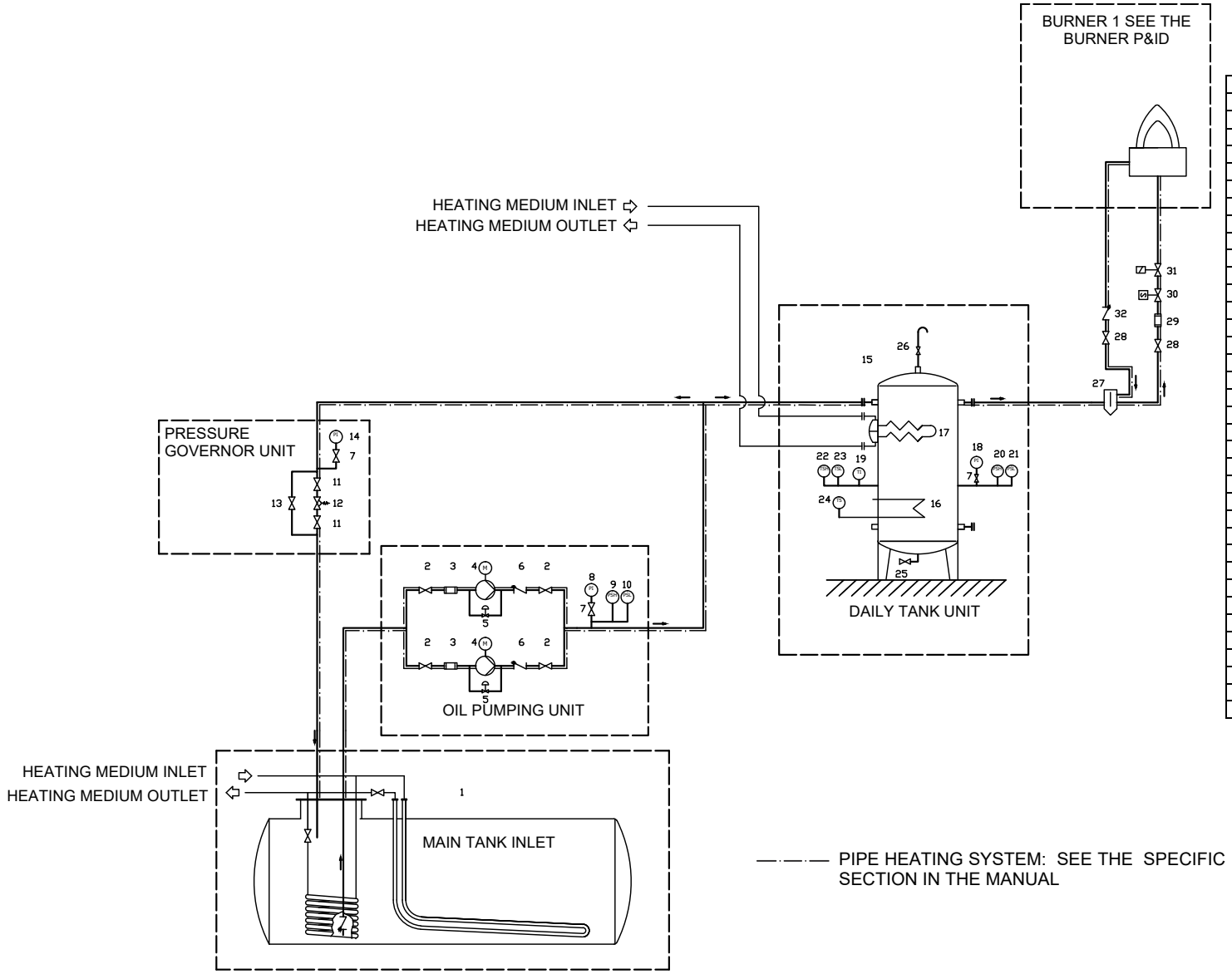

	OIL TRAIN
1	Main tank
	OIL PUMPING UNIT
2	Manual valve
3	Filter
4	Pump coupled to electrical motor
5	Safety valve
6	One-way valve
7	Manual valve
8	Pressure gauge
9	Maximum pressure switch
10	Minimum pressure switch
	PRESSURE GOVERNOR UNIT
11	Manual valve
12	Pressure governor
13	Needle valve
14	Pressure gauge
	DAILY TANK
15	Daily tank
16	Electrical resistor
17	Heating device
18	Pressure gauge
19	Thermometer
20	High pressure switch
21	Low pressure switch
22	Thermostat (high)
23	Thermostat (low)
24	Thermostat
25	Manual valve
26	Manual valve
	TO THE BURNER
27	Degassing bottle
28	Manual valve
29	Filter (supplied loose with the burner)
30	Solenoide valve
31	Safety valve
32	One-way valve

PART III: OPERATION

DANGER! Incorrect motor rotation can seriously damage property and injure people.WARNING: before starting the burner up, be sure that the manual cutoff valves are open and check that the pressure upstream the gas train complies the value quoted on paragraph "Technical specifications". Be sure that the mains switch is closed.

DANGER: During commissioning operations, do not let the burner operate with insufficient air flow (danger of formation of carbon monoxide); if this should happen, make the gas decrease slowly until the normal combustion values are achieved.WARNING: never loose the sealed screws! otherwise, the device warranty will be immediately invalidate!

LIMITATIONS OF USE

THE BURNER IS AN APPLIANCE DESIGNED AND CONSTRUCTED TO OPERATE ONLY AFTER BEING CORRECTLY CONNECTED TO A HEAT GENERATOR (E.G. BOILER, HOT AIR GENERATOR, FURNACE, ETC.), ANY OTHER USE IS TO BE CONSIDERED IMPROPER AND THEREFORE DANGEROUS.

THE USER MUST GUARANTEE THE CORRECT FITTING OF THE APPLIANCE, ENTRUSTING THE INSTALLATION OF IT TO QUALIFIED PERSONNEL AND HAVING THE FIRST COMMISSIONING OF IT CARRIED OUT BY A SERVICE CENTRE AUTHORISED BY THE COMPANY MANUFACTURING THE BURNER.

A FUNDAMENTAL FACTOR IN THIS RESPECT IS THE ELECTRICAL CONNECTION TO THE GENERATOR'S CONTROL AND SAFETY UNITS (CONTROL THERMOSTAT, SAFETY, ETC.) WHICH GUARANTEES CORRECT AND SAFE FUNCTIONING OF THE BURNER.

THEREFORE, ANY OPERATION OF THE APPLIANCE MUST BE PREVENTED WHICH DEPARTS FROM THE INSTALLATION OPERATIONS OR WHICH HAPPENS AFTER TOTAL OR PARTIAL TAMPERING WITH THESE (E.G. DISCONNECTION, EVEN PARTIAL, OF THE ELECTRICAL LEADS, OPENING THE GENERATOR DOOR, DISMANTLING OF PART OF THE BURNER).

NEVER OPEN OR DISMANTLE ANY COMPONENT OF THE MACHINE EXCEPT FOR ITS MAINTENANCE.

TO SECURE THE MACHINE, ACT ON THE ISOLATOR SWITCH. IN CASE OF ANOMALIES THAT REQUIRED A SHUT DOWN OF THE BURNER, IT'S POSSIBLE TO ACT ON THE AUXILIARY LINE SWITCH, LOCATED ON THE BURNER FRONT PANEL.

IN CASE OF A BURNER SHUT-DOWN, RESET THE CONTROL BOX BY MEANS OF THE RESET PUSHBUTTON. IF A SECOND SHUT-DOWN TAKES PLACE, CALL THE TECHNICAL SERVICE, WITHOUT TRYING TO RESET FURTHER.

WARNING: DURING NORMAL OPERATION THE PARTS OF THE BURNER NEAREST TO THE GENERATOR (COUPLING FLANGE) CAN BECOME VERY HOT, AVOID TOUCHING THEM SO AS NOT TO GET BURNT.

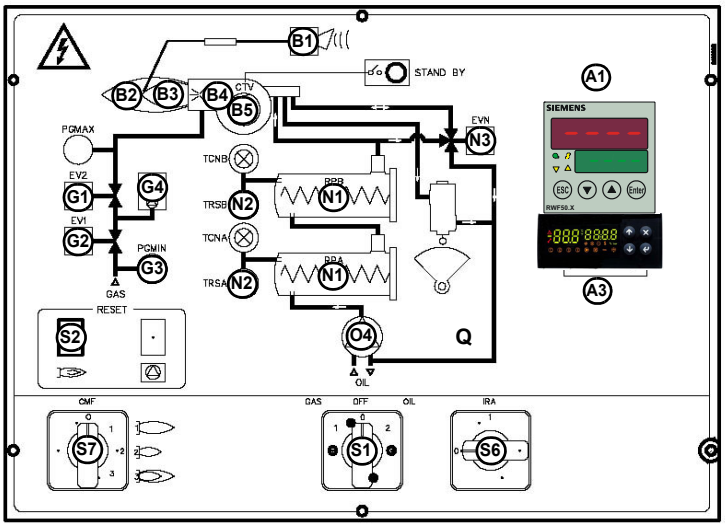

	Keys
B1	Lock-out LED
B2	Hi-flame operation LED
B3	Lo-flame operation LED
B4	"Ignition transformer operation" LED
B5	"Fan motor overload tripped" LED
G1	"EV2 opening" LED
G2	"EV1 opening" LED
G3	"Gas pressure switch signal " LED
G4	Gas proving system lockout signalling LED
S1	Main switch
S2	Reset pushbutton for control box
S6	Auxiliary resistors switch
S7	CMF switch - fully modulating burners only
O4	Oil pump in operation LED
N1	Pre-heating oil tank
N2	Pre-heating resistors safety thermostat
N3	Oil solenoid valve operation
A1	Burner Modulator (only on fully modulating burners)
A3	Regulation thermostat for pre-heating oil resistors

Fig. 13 - Burner front panel

Funzione MIX MATIC

Position 0: burner off
Position 1: burner operation 1st fuel
Position 2: burner operation 2nd fuel
Position 3: automatic operation

The terminal block MA inside the switch cabinet has 2 terminals:
14A and 15A to which the dry contact is connected.
NO contact: 1st fuel burner operationКонтакт NO:NC contact: 2nd fuel burner operation

* A relay contact is connected to the 2 terminals 14A and 15A and is controlled by 2 pressure switches mounted on the gas line.

Operation

- Select the fuel by turning the switch **S1** on the burner control panel .

N.B. if the heavy oil is used, be sure the cutoff valves on the delivery and return pipes are OPEN.

- Check that the burner is not locked (LED **B1** lights up); if so, reset it by pressing the reset button **S2**.
- Check that the series of thermostats (or pressure switches) enable the burner to start up.

Gas Operation

- Check that the gas pressure in the circuit is high enough (LED **B1** on).
- The valve proving test begins.
- At the beginning of the start-up cycle the the air damper moves to the maximum opening, the fan motor starts and the pre-purge phase begins. During the pre-purge phase the complete opening of the air damper is signalled by the LED **B2** on the front panel.
- At the end of the pre-purge stage, the air damper moves to the ignition position, the ignition transformer is energised (signalled by LED **B4** on the panel) and, after few sec.onds the two gas valves EV1 and EV2 are energised (indicator lights **G1** and **G2** on). Few seconds after the opening of the gas valves, the ignition transformer is de-energised and LED **B4** is off.
- To move from the low flame position, the actuator opening time (<10 s) is controlled by the control box. When this time elapses, the burner operates according the plant needs.

Heavy oil Operation

- At the beginning of the start-up cycle the air damper moves to the maximum opening, the fan motor starts and the pre-purge phase begins. During the pre-purge phase the complete opening of the air damper is signalled by LED **B2** on the front panel.
- At the end of the pre-purge the air damper is brought to the ignition position and the ignition transformer is energised (signalled by LED **B4** on the panel). Few seconds later, the oil valve opens and the ignition transformer is de-energized (LED **B4** off).
- The burner is now operating and after some seconds the burner is automatically driven into high flame (LED **B2** on), or remains in low flame (LED **B3** on) according to the plant needs.

AIR FLOW AND FUEL ADJUSTMENT

WARNING! During commissioning operations, do not let the burner operate with insufficient air flow (danger of formation of carbon monoxide); if this should happen, make the fuel decrease slowly until the normal combustion values are achieved.
WARNING! the combustion air excess must be adjusted according to the values in the following chart.

Recommended combustion parameters		
Fuel	Recommended (%) CO_2	Recommended (%) O_2
Natural gas	9 ÷ 10	3 ÷ 4.8
Heavy oil	11 ÷ 12.5	4.2 ÷ 6.7

Adjustments - brief description

Adjust the air and gas flow rates at the maximum output (“high flame”) first, by means of the air damper and the adjusting cam respectively.

- Check that the combustion parameters are in the suggested limits.
- .Check the flow rate measuring it on the counter or, if it was not possible, verifying the combustion head pressure by means of a differential pressure gauge.
- Then, adjust the combustion values corresponding to the points between maximum and minimum: set the shape of the adjusting cam foil. The adjusting cam sets the air/gas ratio in those points, regulating the opening-closing of the throttle gas valve.
- Set, now, the low flame output, acting on the low flame microswitch of the actuator in order to avoid the low flame output increasing too much or that the flues temperature gets too low to cause condensation in the chimney.

ADJUSTMENTS FOR GAS OPERATION

1 check the fan motor rotation.
2 Before starting the burner up, drive the high flame actuator microswitch matching the low flame one (in order to let the burner operates at the lowest output) to safely achieve the high flame stage.
3 Start the burner up by means of the thermostat series and wait until the pre-purge time comes to an end and that the burner starts up;
4 drive the burner to high flame stage, by means fo the thermostat **TAB**.
5 Then move progressively the microswitch to higher values until it reaches the high flame position; always check the combustion values and eventually adjusting the gas by means of the valves group stabiliser.
6 go on adjusting air and gas flow rates: check, continuosly, the flue gas analisys, as to avoid combustion with little air; dose the air according to the gas flow rate change following the steps quoted below;

MultiBloc MBE *Regulation VD-R whith PS*

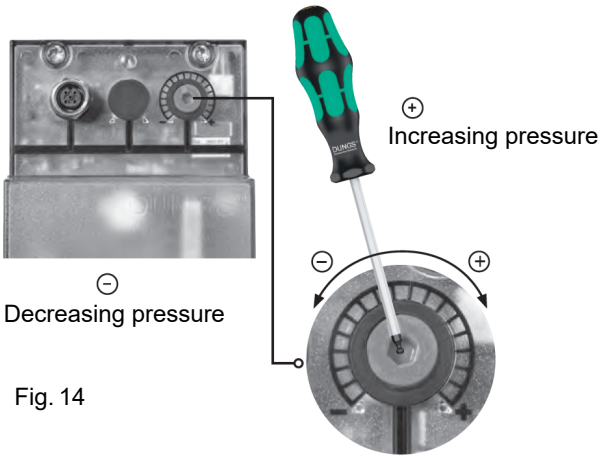

Fig. 14

Setting scale is „Not“ linear! Various sensors available. Output pressure according to sensor‘s measuring range.

Adjust the outlet pressure to the value specified by the burner or equipment manufacturer!

While making outlet pressure adjustments, do not exceed a value that creates a hazardous condition to the burner!

ATTENTION: To set the outlet pressure of the VD-R regulator, act on the adjustment ring nut (Fig. 10)

The position of the indicator in the dial indicates the value of the outlet pressure calculated as a percentage of the full scale of the PS sensor (Fig. 11)

Outlet pressure	MIN	10%	25%	50%	75%	MAX
PS-10/40	4 mbar 0,4 kPa 2 "w.c.	10 mbar 1,0 kPa 4 "w.c.	25 mbar 2,5 kPa 10 "w.c.	50 mbar 5,0 kPa 20 "w.c.	75 mbar 7,5 kPa 30 "w.c.	100 mbar 10,0 kPa 40 "w.c.
PS-50/200	20 mbar 2,0 kPa 8 "w.c.	50 mbar 5,0 kPa 20 "w.c.	125 mbar 12,5 kPa 50 "w.c.	250 mbar 25,0 kPa 100 "w.c.	375 mbar 37,5 kPa 150 "w.c.	500 mbar 50,0 kPa 200 "w.c.

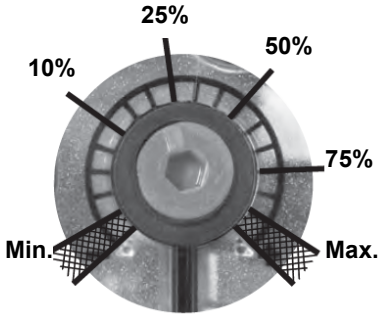

Fig. 15

Adjusting output pressure for positive pressure systems (requires PS-10/40 or PS-50/200):

Pressure taps MultiBloc MBE

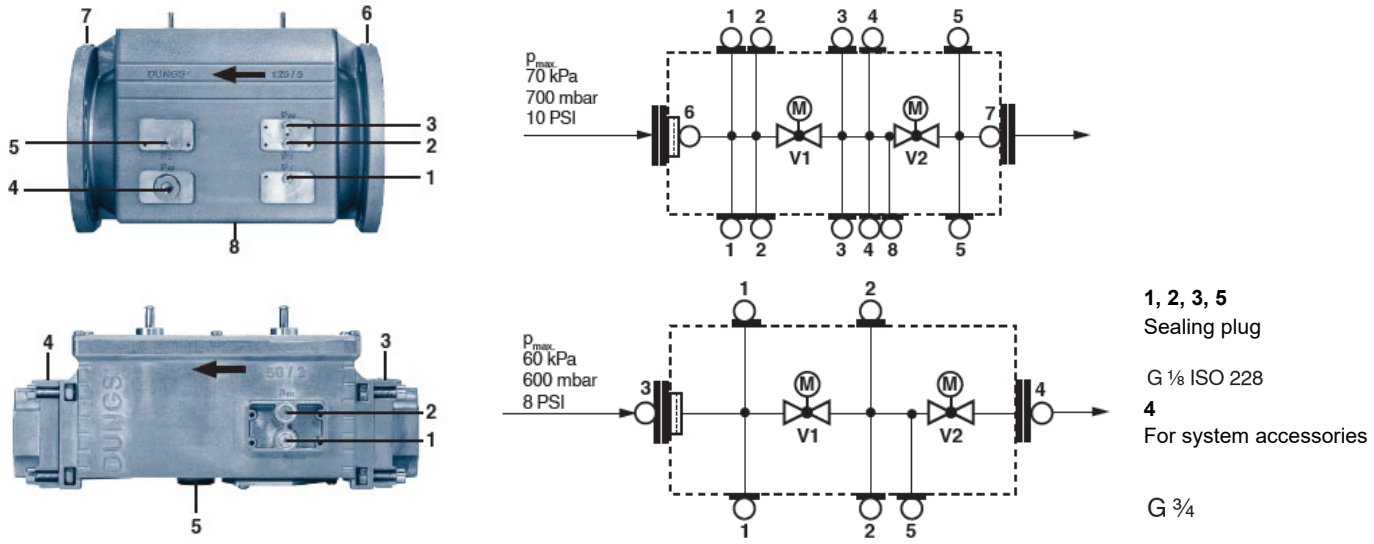

1, 2, 3, 5
Sealing plug

G ⅛ ISO 228

4
For system accessories

G ¾

Fig. 16

Gas valveversion with SKP2 (built-in pressure stabilizer)

To increase or decrease gas pressure, and therefore gas flow rate, remove the cap **T** and use a screwdriver to adjust the regulating screw **VR**. Turn clockwise to increase the flow rate, counterclockwise to reduce it.

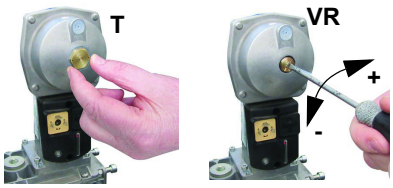

7 Drive the burner to high flame stage (please refer to the LMVx documentation attached to this manual).

8 To adjust the **air flow rate in the high flame stage**, loose the **RA** nut and screw **VRA** as to get the desired air flow rate: moving the rod **TR** towards the air damper shaft, the air damper opens and consequently the air flow rate increases, moving it far from the

shaft the air damper closes and the air flow rate decreases.

Note: once the procedure is perfomed, be sure that the blocking nut **RA** is fasten. Do not change the position of the air damper rods.

9 If necessary, adjust the combustion head position (see the dedicated paragraph).

10 The air and gas rate are now adjusted at the maximum power stage, go on with the point to point adjustement on the **SV1** (FGR side) adjusting cam as to reach the minimum output point.

11 Procedere, ora, alla regolazione dei pressostati.Now adjust the pressure switches.

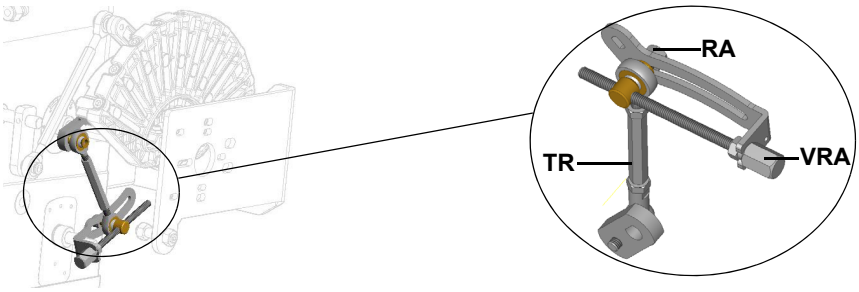

12 If necessary, adjust the combustion head position (see the dedicated paragraph)..

Attention! if it is necessary to change the head position, repeat the air and gas adjustments described above.

13 The air and gas rate are now adjusted at the maximum power stage, go on with the point to point adjustement on the **SV1** (gas side) adjusting cam as to reach the minimum output point.

14 as for the point-to-point regulation, move the gas low flame microswitch a little lower than the maximum position (90°);

15 set the **TAB** thermostat to the minimum in order that the actuator moves progressively towards the low flame position;

16 move the gas low flame microswitch to the minimum to move the actuator towards the low flame until the two bearings find the adjusting screw that refers to the lower position: screw **V1** to increase the rate, unscrew to decrease.

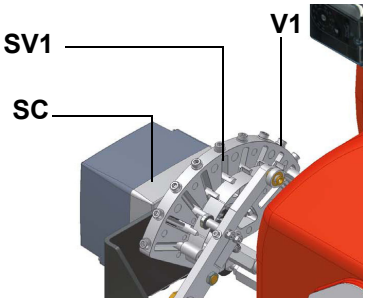

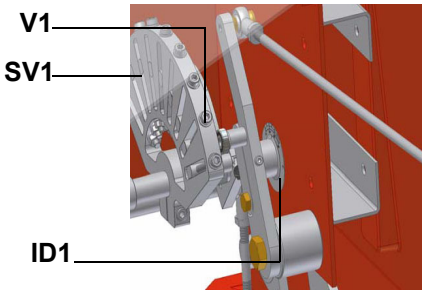

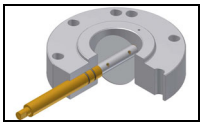

Gas throttle valve open

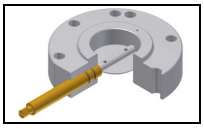

Gas throttle valve closed

17 Move again the gas low flame microswitch towards the minimum to meet the next screw on the adjusting cam and repeat the previous step; go on this way as to reach the desired low flame point.

18 Now adjust the pressure switches.

19

20

Calibration air and gas pressure switches

The **air pressure switch** locks the control box if the air pressure is not the one requested. If it happens, unlock the burner by means of the control box unlock pushbutton, placed on the burner control panel.

The **gas pressure switches** check the pressure to avoid the burner operate when the pressure value is not in the requested pressure range.

Calibration of low gas pressure switch

As for the gas pressure switch calibration, proceed as follows:

- Be sure that the filter is clean.
- Remove the transparent plastic cap.
- While the burner is operating at the maximum output, test the gas pressure on the pressure port of the minimum gas pressure switch.
- Slowly close the manual cutoff valve (placed upstream the pressure switch, see gas train installation diagram), until the detected

pressure is reduced by 50%. Pay attention that the CO value in the flue gas does not increase: if the CO values are higher than the limits laid down by law, slowly open the cutoff valve as to get values lower than these limits.

- Check that the burner is operating correctly.
- Clockwise turn the pressure switch adjusting ring nut (as to increase the pressure value) until the burner stops.
- Slowly fully open the manual cutoff valve.
- Refit the transparent plastic cover on the pressure switch.

Calibration of air pressure switch

To calibrate the air pressure switch, proceed as follows:

- Remove the transparent plastic cap.
- Once air and fuel setting have been accomplished, startup the burner.
- During the pre-purge phase o the operation, turn slowly the adjusting ring nut **VR** in the clockwise direction (to increase the adjusting pressure) until the burner lockout, then read the value on the pressure switch scale and set it to a value reduced by 15%.
- Repeat the ignition cycle of the burner and check it runs properly.
- Refit the transparent plastic cover on the pressure switch.

Calibration the maximum gas pressure switch (when provided)

To calibrate the maximum pressure switch, proceed as follows according to its mounting position:

- remove the pressure switch plastic cover;
- if the maximum pressure switch is mounted upstreaam the gas valves: measure the gas pressure in the network, when flame is off; by means of the adjusting ring nut **VR**, set the value read, increased by the 30%.
- if the maximum pressure switch is mounted downstream the “gas governor-gas valves” group and upstream the butterfly valve: light the burner, adjust it according to the procedure in the previous paragrph. Then, measure the gas pressure at the operating flow rate, downstream the “gas governor-gas valves” group and upstream the butterfly valve; by means of the adjusting ring nut **VR**, set the value read on step 2, increased by the 30%;
- replace the plastic cover.

Adjusting the combustion head

Only if necessary, change the combusiton head position: to let the burner operate at a lower output, loose the **VB** screw and move progressively back the combustion head towards the MIN position, by turning clockwise the **VRT** ring nut. Fasten **VB** screw when the adjustment is accomplished.

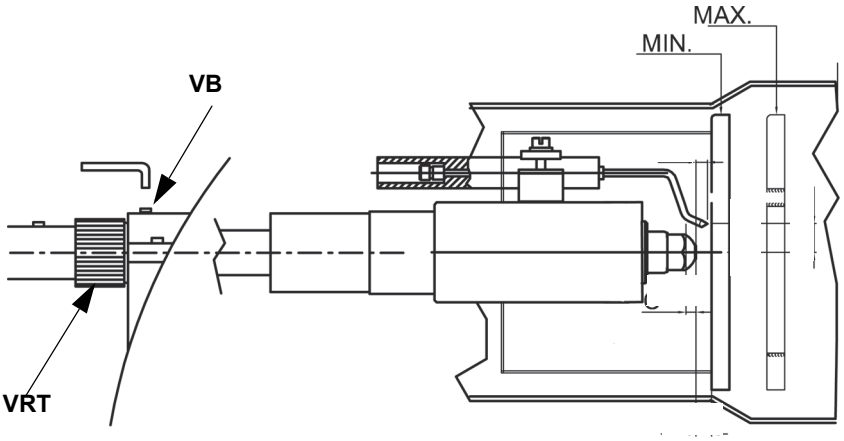

Attention! if it is necessary to change the head position, repeat the air and fuel adjustments described above.

Gas Proving System VPS504 (Option)

The VPS504 check the operation of the seal of the gas shut off valves. This check, carried out as soon as the boiler thermostat gives a start signal to the burner, creates, by means of the diaphragm pump inside it, a pressure in the test space of 20 mbar higher than the supply pressure.

When wishing to monitor the test, install a pressure gauge ranged to that of the pressure supply point **PA**. If the test cycle is satisfactory, after a few seconds the consent light **LC** (yellow) comes on. In the opposite case the lockout light **LB** (red) comes on. To restart it is necessary to reset the appliance by pressing the illuminated pushbutton **LB**.

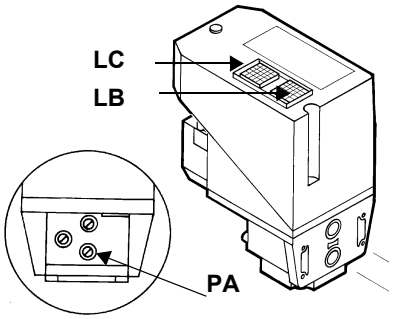

Before starting up the burner, make sure that the return pipe to the tank is not obstructed. Any obstruction would cause the pump seal to break.

***ATTENTION:* before starting the burner up, be sure that the manual cutoff valves are open. Be sure that the mains switch is closed.**

Oil thermostat adjustment

Progressive and fully modulanting oil burners are equipped with electronic multi-thermostat Danfoss MCX, whose operation is controlled by thyristor. (for details refer to the attached technical documentation)

Fig. 17 - Danfoss MCX

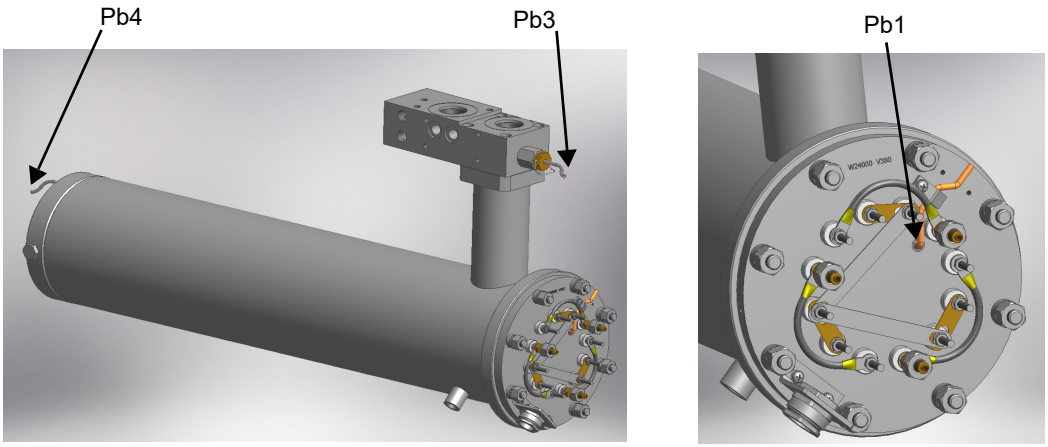

Fig. 18 - Probe connections (Danfoss MCX)(for burners with 1 tank)

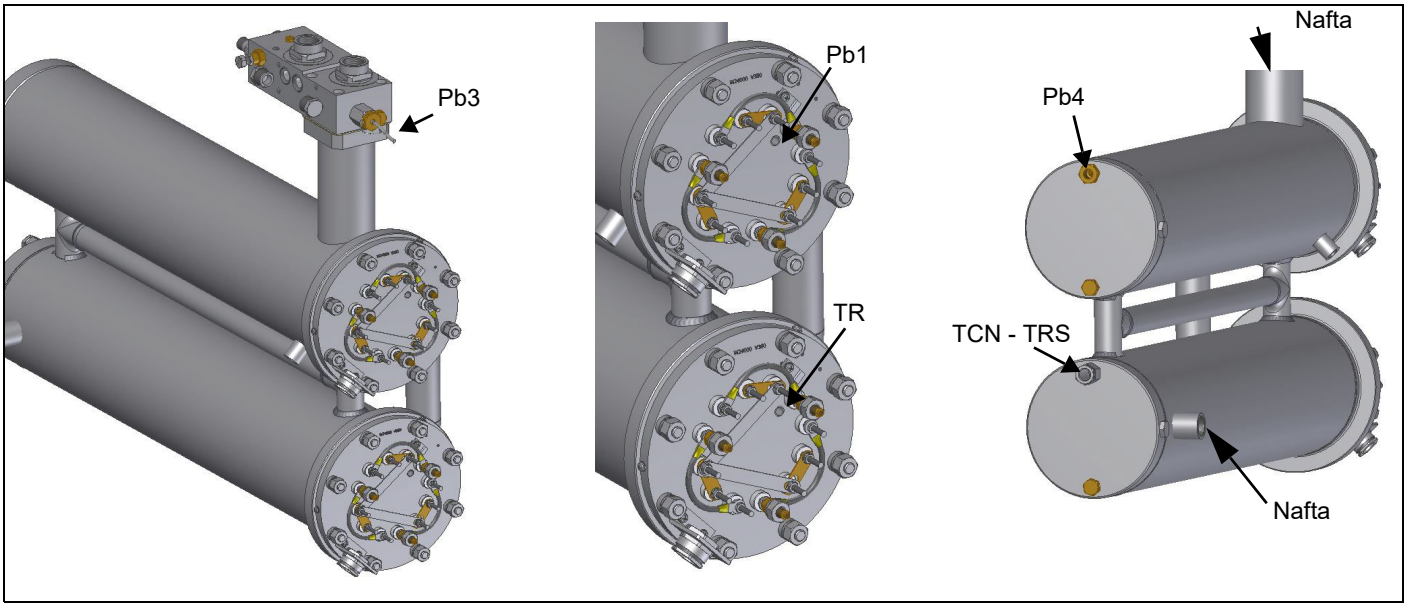

Fig. 19 - Probe connections (Danfoss MCX)(for burners with 2 tanks)

Menu path				Oil viscosity at 50 °C according to the letter shown in the burner model				
				P	N	E	D	H
				89 cSt	< 50 cSt	> 50 cSt < 110 cSt	> 110 cSt < 400 cSt	> 400 cSt < 4000 cSt
				12 °E	< 7°E	> 7 °E < 15 °E	> 15 °E < 50 °E	> 50 °E < 530 °E
Par								
rEG	Pb1	tr	Oil heater temperature probe	parameter not visible				
	Pb2	tCI	Plant consent temperature probe (when installed)	20 °C	70 °C	70 °C	70 °C	---
	Pb3	Oil	Oil heater output temperature probe (PID regulation);	60-70 °C	110-120 °C	120-130 °C	130-140 °C	140-150 °C
		SP0	Set-point oil heater with oil pump stopped (stand-by)	45 °C	120 °C	130 °C	140 °C	150 °C
	Pb4	tcn	Oil heater consent temperature probe	40 °C	100 °C	100 °C	110 °C	120 °C
		trS	Safety temperature tank resistors (manual reset)	120 °C	190-200 °C	190-200 °C	190-200 °C	190-200 °C

The oil viscosity at the nozzle, should be about 1,5 °E, which guarantees correct and safe functioning of the burner. The above temperature values are suggested and refer to a plant designed according to the prescriptions in the burner user manual.The suggested values can change in reference to the fuel oil specifications.

Burners equipped with double tank

The first oil tank resistance is controlled by menas thermostats according to the below scheme. All thermostats are located inside the control panel. To set the temperature use a small screwdriver. The second oil tank is controlled by “MCX” electronic thermostat.

Such temperature must be set during burner operation, checking temperature in the thermometer mounted on the pre-heating tank. We suggest a thermometer with scale up to 200° C.

Adjust this thermostat to the correct value according to the viscosity-temperature diagram and check the temperature by using a thermometer with a scale of up to 200° C mounted on the pre-heating tank.

Safety resistors thermostat TRS: it is factory preset and sealed. Don not modify it!

When the set temperature is exceeded, check the reason and reset it by means of the push button PR

Resistor thermostat TR: check the best atomising oil temperature and set it on TR.

Thermostat TCN (it gives the enabling signal to the oil N.C. valve): set TCN at about 20° less than TR.

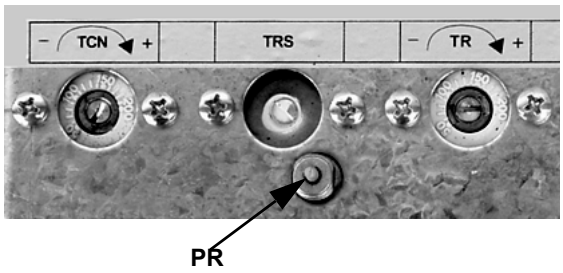

Adjusting heavy oil flow rate

The oil flow rate can be adjusted choosing a nozzle that suits the boiler/utilisation output and setting the delivery and return pressure values according to the ones quoted on the following charts.

NOZZLE	DELIVERY PRESSURE bar
FLUIDICS WR2 / UNIGAS M3	25

FLUIDICS NOZZLE: REFERENCE DIAGRAM (INDICATIVE ONLY)

DIMENSIONS	FLOW RATE kg/h		Indicative pessure on return (bar)
	Min	Max	
40	13	40	19
50	16	50	22
60	20	60	20
70	23	70	23
80	26	80	23
90	30	90	22
100	33	100	22
115	38	115	21
130	43	130	22
145	48	145	21
160	53	160	21
180	59	180	22
200	66	200	21
225	74	225	22
250	82	250	22
275	91	275	22
300	99	300	23
330	109	330	23
360	119	360	22
400	132	400	22
450	148	450	22
500	165	500	22
550	181	550	22
600	198	600	23
650	214	650	23
700	231	700	23
750	250	750	23
800	267	800	22

Tab. 3

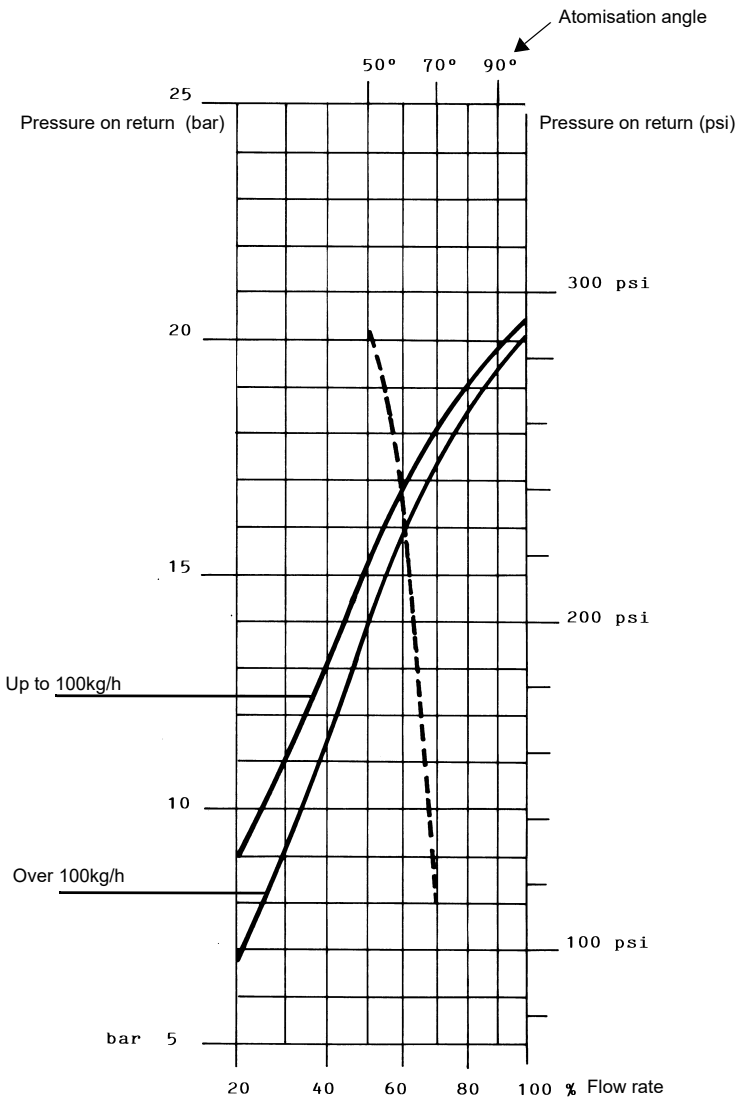

NOZZLE SUPPLY PRESSURE = 25 bar

- - - - - Atomisation angle according to the return pressure

——— % Flow rate

viscosity at nozzle = 5 cSt

ATTENTION! To achieve the maximum flow rate close completely the return line.

Oil Flow Rate Settings by means of Siemens SQM40..

1 Once the air and gas flow rates are adjusted, turn the burner off, switch to the oil operation (OIL, on the burner control panel).

2 with the electrical panel open, prime the oil pump acting directly on the related **CP** contactor (see next picture): check the pump motor rotation and keep pressing for some seconds until the oil circuit is charged;

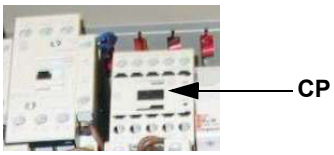

3 bleed the air from the **M** pressure gauge port by loosing the cap without removing it, then release the contactor.

Suntec TA.	HP Technik UHE
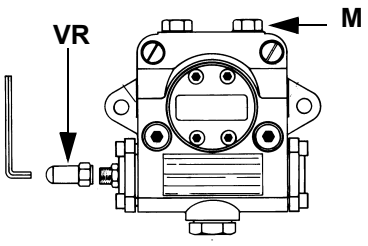	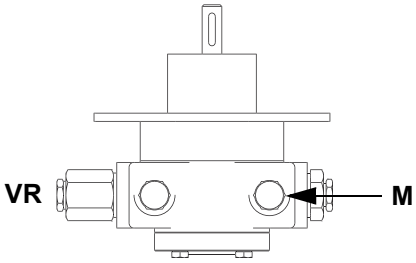

4 Before starting the burner up, drive the high flame actuator microswitch matching the low flame one (in order to let the burner operates at the lowest output) to safely achieve the high flame stage .

5 Start the burner up by means of the thermostat series and wait until the pre-purge time comes to an end and that the bruner starts up;

6 drive the burner to high flame stage, by means fo the thermostat **TAB** (as far as fully-modulating burners, see the related paragraph).

7 Then move progressively the microswitch to higher values until it reaches the high flame position; always check the combustion values and eventually adjusting the oil pressure (see next step).

SQM40.265 CSW Actuator cams

8 Only if necessary, adjust the supply pressure as follows;insert a pressure gauge into the port shown on figure and act on on the pump adjusting screw **VR**. Pressure values are indicated at the beginning of this paragraph.

9 in order to get the maximum oil flow rate, adjust the pressure (reading its value on the **PG** pressure gauge) without changing the air flow rate set during the gas operation adjustments (see previous paragraph): checking always the combustion parameters, the adjustment is to be performed by means of the **SV2** adjusting cam screw (see picture) when the cam has reached the high flame position.

10 once the oil rate is adjusted at the maximum output (the air rate was adjusted in the gas regulation), go on with the point to point adjustment on the **SV2** (light oil side) adjusting cam as to reach the minimum output point, as described on the next steps.

11 as for the point-to-point regulation, move the gas low flame microswitch a little lower than the maximum position (90°);

12 set the **TAB** thermostat to the minimum in order that the actuator moves progressively towards the low flame position (as far as fully-modulating burners, see the related paragraph);

13 move the low flame cam to the minimum to move the actuator towards the low flame until the two bearings find the adjusting screw that refers to the lower position: screw **V2** to increase the rate, unscrew to decrease.

14 Move again cam III towards the minimum to meet the next screw on the adjusting cam and repeat the previous step; go on this way as to reach the desired low flame point.

15 The low flame position must never match the ignition position that is why the cam must be set 20°- 30° more than the ignition position.

Turn the burner off; then start it up again. If the adjustment is not correct, repeat the previous steps.

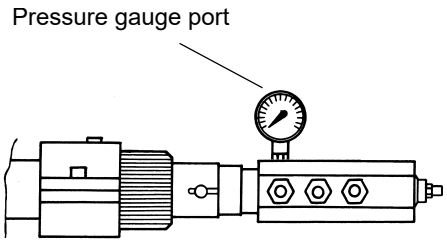
Pressure gauge port

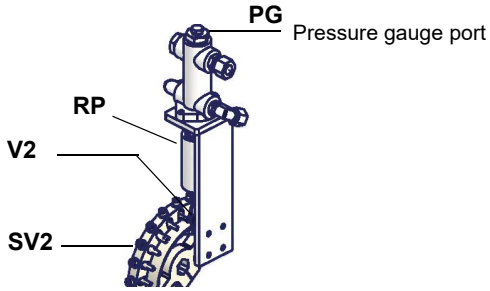
PG
Pressure gauge port
RP
V2
SV2

PART IV: MAINTENANCE

At least once a year carry out the maintenance operations listed below. In the case of seasonal servicing, it is recommended to carry out the maintenance at the end of each heating season; in the case of continuous operation the maintenance is carried out every 6 months.

WARNING: ALL OPERATIONS ON THE BURNER MUST BE CARRIED OUT WITH THE MAINS DISCONNECTED AND THE FUEL MANAUL CUTOFF VALVES CLOSED!

ATTENTION: READ CAREFULLY THE "WARNINGS" CHAPTER AT THE BEGINNIG OF THIS MANUAL.

ROUTINE MAINTENANCE

- Clean and examine the gas filter and replace it if necessary.
- Clean and examine the oil filter cartridge and replace it if necessary.
- Examine the flexible hoses and check for possible leaks.
- Check and clean if necessary the oil heaters and the tank, according to the fuel type and its use; remove the heaters flange fixing nuts and remove the heaters from the tank: clean by using steam or solvents and not metallic things.
- Remove and clean the combustion head.
- Examine and clean the ignition electrode, adjust and replace if necessary.
- Examine and clean the detection probe, adjust and replace if necessary.
- Examine the detection current.
- Remove and clean the heavy oil nozzle ***(Important: use solvents for cleaning, not metallic tools)*** and at the end of the maintenance procedures, after replacing the burner, turn it on and check the shape of the flame; if in doubt replace the nozzle. Where the burner is used intensively it is recommended to replace the nozzle as a preventive measure, at the begin of the operating season.
- Clean and grease joints and rotating parts.

IMPORTANT:Remove the combustion head before checking the ignition electrode.

- Remove and clean the compressed air regulator
- Remove and clean the oil regulator (if provided)
-

CAUTION: avoid the contact of steam, solvent and other liquids with the electric terminals of the resistor.
On flanged heaters, replace the seal gasket before refitting it.
Periodic inspections must be carried out to determine the frequency of cleaning.

ATTENTIONwhen servicing, if it was necessary to disassemble the gas train parts, remember to execute the gas proving test, once the gas train is reassembled, according to the procedure imposed by the law in force.

Gas filter maintenance

To clean or remove the filter, proceed as follows:

1. remove the cap unscrewing the fixing screws (A);
2. remove the filtering cartridge (B), clean it using water and soap, blow it with compressed air(or replace it, if necessary)
3. replace the cartridge in its proper position taking care to place it inbetween the guides as not to hamper the cap replacement;
4. be sure to replace the "O" ring into its place (C) and replace the cover fastening by the proper screws (A).

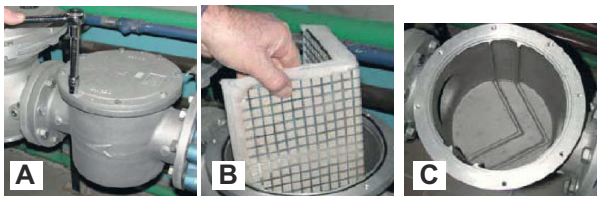

WARNING: Before opening the filter, close the manual cutoff valve downstream the filter and bleed the gas; check that inside the filter there is no pressurised gas.

MultiBloc MBE*MultiBloc VD Mounting*

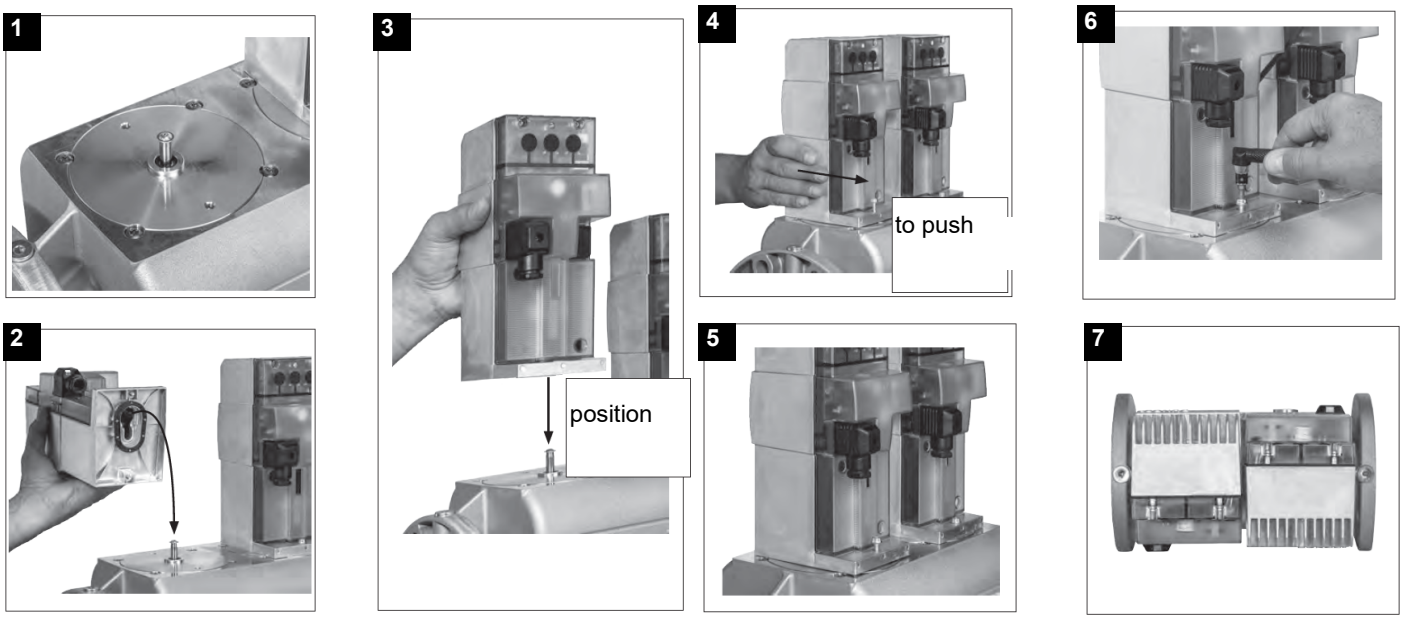

1. Position VD on VB, fig. 2+3.
2. Slide VD forward up to the stop, fig. 4.
3. Screw VD on with 2 M5 screws for each, max. 5 Nm/44 in.-lb., fig. 5/6.
4. VD can be mounted rotated by 180°, fig. 7.

Thecnical procedure of self cleaning filters substitution (valid for all models)

1 Close the bowl valve before the self cleaning filter
2 Switch off any electrical equipment on board on the filter (example motorization or heaters)

WARNING! Drain the system by unscrewing the drain screw on the bottom of the self cleaning filter

3 Disconnect the outlet pipe from the cover of the self cleaning filter
4 Remove the cover with all the filter pack, leaving only the bowl on the line
5 Clean any residue on the bottom of the bowl and clean the seat of the O-ring seal

WARNING! Replace the O-ring seal between the bowl and cover

6 Insert the filter pack again making sure to respect the correct inlet/outlet direction or any references on the cover and tray
7 Replace the filter by following the reverse order operations
8 Make sure there is no leakage and give the power to any electrical equipmente on the filter

Self-cleaning filter

Fitted only on high viscosity oil burners. Periodically turn the knob to clean the filter.

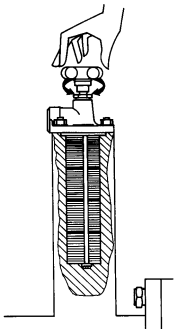

Removing the combustion head

1 Remove the top **H**.
2 Remove the **UV** detector out of its housing: disconnect electrode cables and the light oil flexible hoses.
3 Loosen the screws **V** holding the gas manifold **G**, loosen the two connectors **E** and remove the assembly as shown.

Note: to replace the combustion head, reverse the operations described above.

4 Clean the combustion head by means of a vacuum cleaner; scrape off the scale by means of a metallic brush.

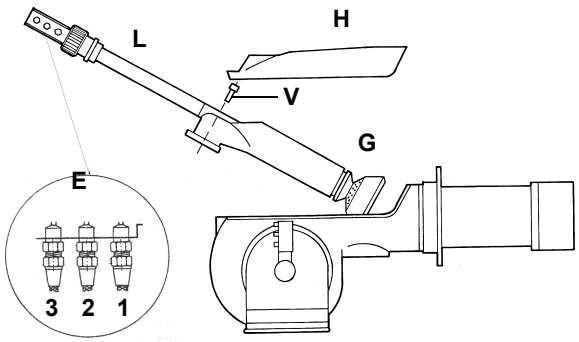

Key

1 Inlet
2 Return
3 Gun opening
E Oil piping connections
H Cover
L Oil gun

Removing the oil gun, replacing the nozzle and the electrodes

ATTENTION: avoid the electrodes to get in touch with metallic parts (blast tube, head, etc.), otherwise the boiler operation would be compromised. Check the electrodes position after any intervention on the combustion head.

To remove the oil gun, proceed as follows:

1 remove the combustion head as described on the prevoius paragraph;

2 remove the oil gun and the electrodes: check the oil gun, replace it if necessary;

3 after removing the oil gun, unscrew the nozzle and replace it if necessary;

4 in order to replace the electrodes, unscrew the fixing screws and remove them: place the new electrodes being careful to observe the measures shown on next paragraph; reassemlbe following the reversed procedure.

Caution: adjust the nozzle position according to the procedure on the next paragraph.

3.1 Adjusting the electrodes position

Adjust the electrodes position, according to the measures (in mm) shown on the next picture.

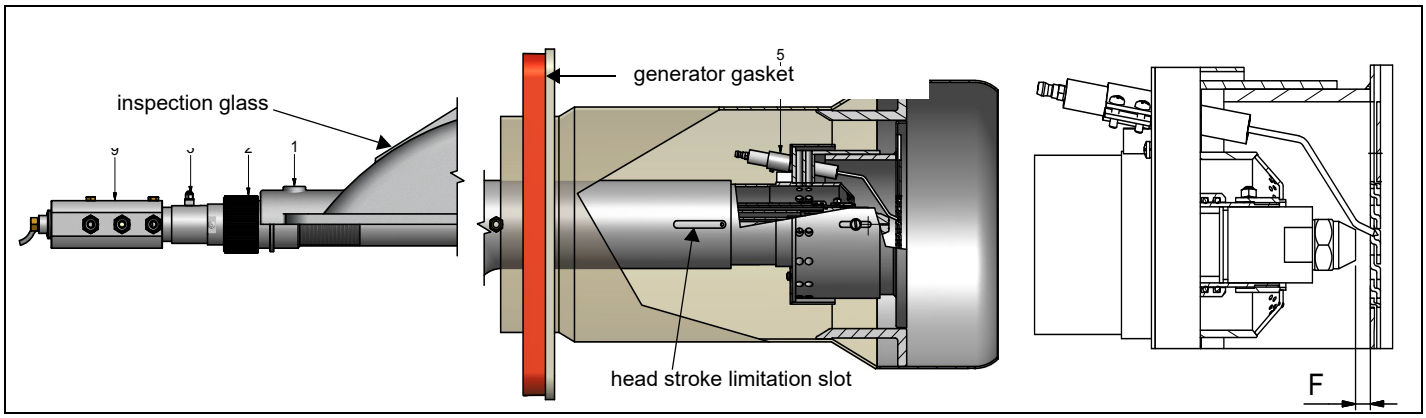

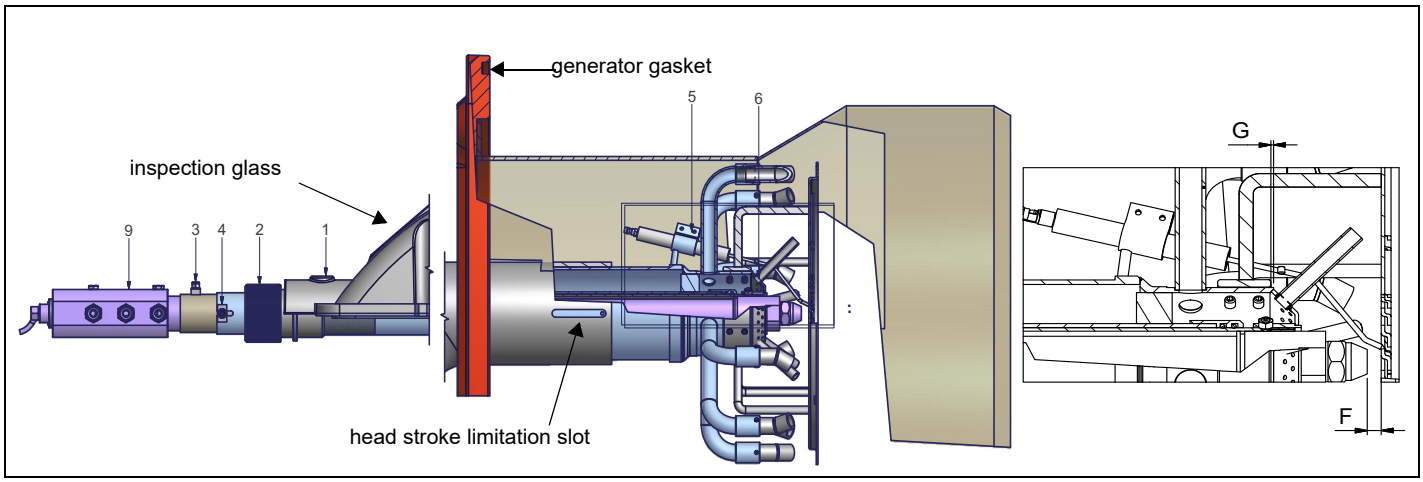

1 Move the combustion head “all-ahead” by the “head stroke limitation cam”, acting on the ring nut **2**; fix it by means of screw 1;

2 place the gas plate "**6**" according to measure **G** *(gas plate opening)* - (see table below) - acting on screw "**4**"

3 place the nozzle to "**F**" mm (see table below) from the diffuser disc, acting on screw "**3**"

4 place the electrodes according to measures **E**,**B**,**N** (see table below) acting on screw"**5**" (if the case, correct the measure, by deforming the electrode wire).

.

G	A	B	C	E	F	N
0	10÷15	3÷5	3÷4	10÷13	8÷10	10÷13

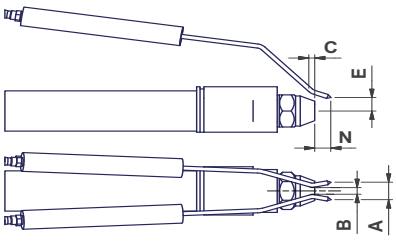

Checking the detection current

To check the detection signal follow the scheme in the picture below. If the signal is less than the value indicated, check the position of the detection electrode or detector, the electrical contacts and, if necessary, replace the electrode or the detector.

Control box	Minimum detection signal
Siemens LFL1.3..	70µA with UV detector)

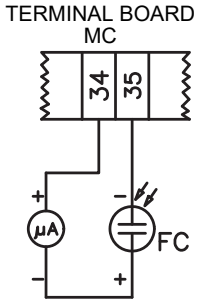

Fig. 20: Detection by photocell QRA..

Flame detection probe

To clean/replace the detection photocell, proceed as follows:

1 Disconnect the system from the electrical power supply.
2 Shut off the fuel supply;
3 remove the photocell from its slot (see next figure);
4 clean the bulbe if dirty, taking care not to touch it with bare hands;
5 if necessary, replace the bulb;

replace the photocell into its slot.

Seasonal stop

To stop the burner in the seasonal stop, proceed as follows:

1 turn the burner main switch to 0 (Off position)
2 disconnect the power mains
3 close the fuel valve of the supply line

Burner disposal

In case of disposal, follow the instructions according to the laws in force in your country about the “Disposal of materials”.

TROUBLESHOOTNG GUIDE Gas operation

BURNER DOESN'T LIGHT	* No electric power supply	* Restore power supply
	* Main switch open	* Close switch
	* Thermostats open	* Check set points and thermostat connections
	* Bad thermostat set point or broken thermostat	* Reset or replace the thermostat
	* No gas pressure	* Restore gas pressure
	* Safety devices (manually operated safety thermostat, pressure switches and so on) open	* Restore safety devices; wait till boiler reaches operating temperature then check safety device functionality.
	* Broken fuses	* Replace fuses. Check current absorption
	* Fan thermal contacts open (three phases motors only)	* Reset contacts and check current absorption
	* Burner control lock out	* Reset and check its functionality
	* Burner control damaged	* Replace burner control
GAS LEAKAGE: BURNER LOCKS OUT (NO FLAME)	* Gas flow is too low	* Increase the gas flow * Check gas filter cleanness * Check butterfly valve opening when burner is starting (only Hi-Low flame and progressive)
	* Ignition electrodes discharge to ground because dirty or broken	* Clean or replace electrodes
	* Bad electrodes setting	* Check electrodes position referring to instruction manual
	* Electrical ignition cables damaged	* Replace cables
	* Bad position of cables in the ignition transformer or into the electrodes	* Improve the installation
	* Ignition transformer damaged	* Replace the transformer
BURNER LOCKS OUT WITH FLAME PRESENCE	* Bad flame detector set	
	* Flame detector damaged	* Replace or adjust flame detector
	* Bad cables of flame detector	* Check cables
	* Burner control damaged	* Replace burner control
	* Phase and neutral inverted	* Adjust connections
	* Ground missing or damaged	* Check ground continuity
	* Voltage on neutral	* Take off tension on neutral
	* Too small flame (due to not much gas)	* Adjust gas flow * Check gas filter cleanness
	* Too much combustion air	* Adjust air flow rate
only FOR LME22: BURNER CONTINUES TO PERFORM ALL ITS FEATURES WITHOUT IGNITING THE BURNER	* Air pressure switch damaged or bad links	* Check air pressure switch functions and links
	* Burner control damaged	* Replace burner control
BURNER LOCKS OUT WITHOUT ANY GAS FLOW	* Gas valves don't open	* Check voltage on valves; if necessary replace valve or the burner control * Check if the gas pressure is so high that the valve cannot open
	* Gas valves completely closed	* Open valves
	* Pressure governor too closed	* Adjust the pressure governor
	* Butterfly valve closed	* Open the butterfly valve
	* Maximum pressure switch open.	* Check connection and functionality
	* Air pressure switch doesn't close the NO contact	* Check connections * Check pressure switch functionality
THE BURNER IS BLOCKED AND THE EQUIPMENT PROVIDES A LOCK CODE "CAUSE AIR PRESSURE SWITCH FAULT"	* Air pressure switch damaged (it keeps the stand-by position or badly set)	* Check air pressure switch functionality * Reset air pressure switch
	* Air pressure switch connections wrong	* Check connections
	* Air fan damaged	* Replace motor
	* No power supply	* Reset power supply
	* Air damper too closed	* Adjust air damper position
BURNER LOCKS OUT DURING NORMAL RUNNING	* Flame detector circuit interrupted	* Check wiring * Check photocell
	* Burner control damaged	* Replace burner control
	* Maximum gas pressure switch damaged or badly set	* Reset pressure switch or replace it
THE BURNER STARTS AND AFTER A WHILE IT REPEATS THE STARTING CYCLE.	* Gas pressure switch badly set	* Reset the pressure switch
	* Gas filter dirty	* Clean gas filter
	* Gas governor too low or damaged	* Reset or replace the governor
BURNER STANDS WHILE RUNNING WITHOUT ANY SWITCHING OF THERMOSTATS	* Thermal contacts of fan motor open	* Reset contacts and check values * Check current absorption
FAN MOTOR DOESN'T START	* Internal motor wiring broken	* Replace wiring or complete motor
	* Fan motor starter broken	* Replace starter
	* Fuses broken (three phases only)	* Replace fuses and check current absorption
BURNER DOESN'T SWITCH TO HIGH FLAME	* Hi-low flame thermostat badly set or damaged	* Reset or replace thermostat
	* Servomotor cam badly set	* Reset servomotor cam
***mechanical only*: SOMETIMES THE SERVOMOTOR RUNS IN THE WRONG WAY**	* Servomotor capacitor damaged	* Replace capacitor

KP91, KP92, KP93

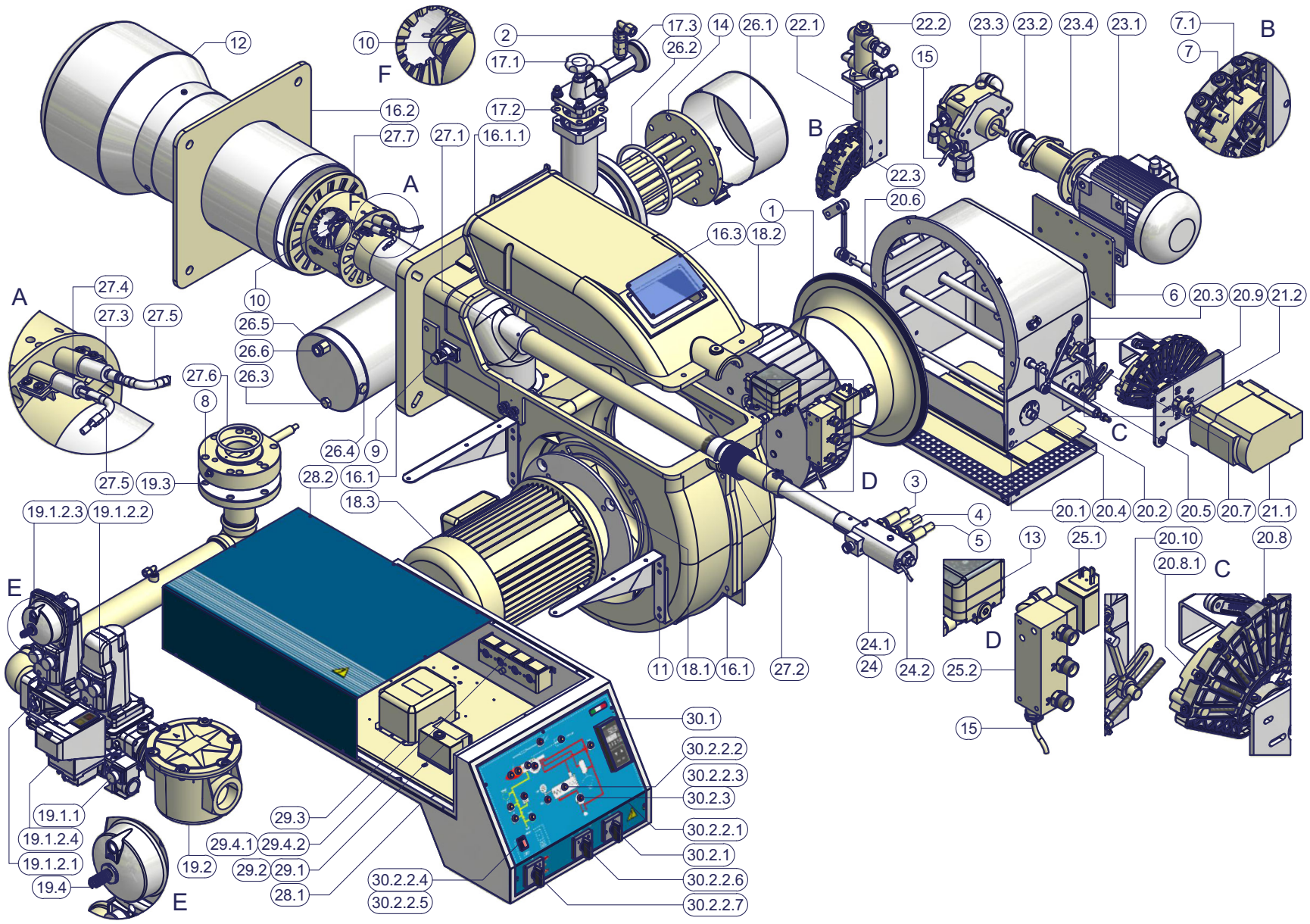

1	AIR INLET CONE	20.2	AIR INTAKE DAMPER	27.7	COMBUSTION HEAD
2	GAS BLEEDING VALVE	20.3	AIR INTAKE	28.1	BOARD
3	OIL FLEXIBLE HOSE	20.4	LOUVER SHAFT	28.2	COVER
4	OIL FLEXIBLE HOSE	20.5	LOUVER SHAFT	29.1	CONTROL BOX
5	OIL FLEXIBLE HOSE	20.7	ADJUSTING CAM SHAFT	29.2	CONTROL BOX SOCKET
6	PLATE	20.8	ADJUSTING CAM	29.3	IGNITION TRANSFORMER
7	ADJUSTING CAM	20.8.1	ADJUSTING CAM FOIL	29.4.1	THERMOSTAT
7.1	ADJUSTING CAM FOIL	20.9	BRACKET	29.4.2	THERMOSTAT
8	BUTTERFLY GAS VALVE	20.10	AIR LOUVER LEVERAGE	30.1	OUTPUT CONTROLLER
9	PHOTOCELL	21.1	ACTUATOR	30.2.1	SWITCH
10	NOZZLE	21.2	CONNECTOR	30.2.2.1	FRONT CONTROL PANEL
11	BRACKET	22.1	OIL GOVERNOR CYLINDER	30.2.2.2	LIGHT
12	BLAST TUBE	22.2	PRESSURE GOVERNOR	30.2.2.3	LIGHT
13	AIR PRESSURE SWITCH	22.3	BRACKET	30.2.2.4	PROTECTION
14	RESISTOR	23.1	MOTOR	30.2.2.5	FLAME UNLOCK BUTTON
15	RESISTOR	23.2	COUPLING	30.2.2.6	SWITCH
16.1	BURNER HOUSING	23.3	PUMP	30.2.2.7	SWITCH
16.1.1	COVER	23.4	BRACKET	30.2.3	LIGHT
16.2	GENERATOR GASKET	24	STANDARD COMPLETE OIL GUN		
16.3	INSPECTION GLASS	24.1	COMPLETE GUN		
17.1	OIL FILTER	24.2	RESISTOR		
17.2	GASKET	25.1	SOLENOID VALVE		
17.3	THERMOMETER	25.2	OIL MANIFOLD		
18.1	MOTOR MOUNTING FLANGE	26.1	COVER		
18.2	FAN WHEEL	26.2	O RING		
18.3	MOTOR	26.3	PLUG		
19.1.1	GAS PRESSURE	26.4	PLUG		
19.1.2.1	GAS VALVE BODY	26.5	OIL PRE-HEATER		
19.1.2.2	SKP ACTUATOR	26.6	SHEATH		
19.1.2.3	SKP ACTUATOR	27.1	GAS MANIFOLD		
19.1.2.4	GAS PROVING SYSTEM	27.2	RING NUT		
19.2	GAS FILTER	27.3	IGNITION ELECTRODE		
19.3	GASKET	27.4	IGNITION ELECTRODE		
19.4	SKP PRESSURE GOVERNOR SPRING	27.5	IGNITION CABLE		
20.1	AIR INTAKE DAMPER	27.6	O RING		

SIEMENS LFL 1.3.. CONTROL BOX

Automatic programme in the event of interruption and indication of position when interrupted

By default, in the event of any kind of interruption, the flow of fuel is immediately interrupted. At the same time the programmer stops and this indicates the position at the time of the interruption.

A symbol on the indicator disc shows each time the type of stoppage:

◄ No start-up (for example fault in the CLOSED signal for the limit contact "Z" at terminal 8 or some other contact between the terminals 12 and 4 or 4 and 5 is not closed).

◄ Start-up suspended because of a fault in the OPEN signal for the limit contact "A" at terminal 8.

P Block due to absence of air pressure signal. From this moment onwards any absence of air pressure will cause a block.

■ Block due to malfunction of the flame detector circuit.

▼ Start-up interrupted because there is a fault in the MINMUM signal for the auxiliary contact of the damper servo motor at terminal 8.

1 Block due to absence of flame signal at the end of the 1st safety period.

From this moment onwards any absence of a flame signal will cause a block.

2 Blockdue to absence of flame signal at the end of the 2nd safety period (flame signal of main burner).

▌ Blockdue to absence of flame signal or air pressure during operation.

Where a block stoppage occurs at any moment between switch on and pre-ignition without registering any symbol, the cause is normally an unscheduled flame signal.

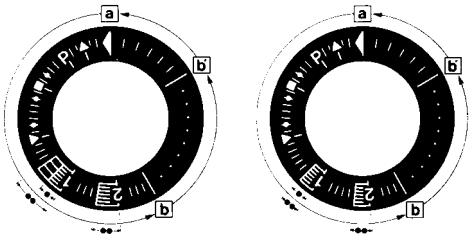

a-b Start-up programme

b-b' For time variants:move the programmer on to the automatic stop after the burner starts up (b' = position of the programmer during normal burner operation).

b(b')-aPost-ventilation programme after a regulation stop.At the start-up position "a" the programmer stops automatically.

. Safety time duration for mono-tube burners

.. Safety time duration for twin-tube burners

The apparatus can be reset immediately after a block. After resetting (and after the elimination of any problem causing the stoppage or after a power failure) the programmer returns to its start-up position. In this event only the terminals 7, 9, 10 and 11 are live in accordance with the monitoring programme. Only after this the device programs a new startup.

Operation

The wiring system and also the control system of the programmer "P" have already been given in this manual. The response signals required for the active parts and the flame monitor circuit are shown by a hatching.

In the absence of these response signals the mechanism interrupts the start-up programme; the exact time of the interruption can be identified from the visual indicator and will cause a block if the safety code requires it.

A consent to start-up by means of the thermostat or pressostat "R"

A-B start-up program

B-C normal burner operation

C regulation stop caused by "R"

C-D programmer returns to start-up position A.

During the regulation stop only terminals 11 and 12 are live and the damper, through the limit contact "Z" of its servo-motor is in the CLOSED position.The flame detector circuit F is activated (terminals 22 and 23 or 23/4) for the detector test and the paracitic light test.

Where the burners do not have dampers (or have an independent 00 damper control mechanism) there must be a bridge between terminals 6 and 8, otherwise the mechanism will not start up the burner.

For a burner to start up the following conditions must be met:

- Mechanism not blocked/reset.
- Damper closed.Limit contact switchZ must be in the CLOSED position and allow current to flow between terminals 11 and 8.
- Any contacts checking that the fuel valve (bv...) is closed, or other contacts with similar functions, must be closed between terminal 12 and the air pressostat LP.
- The contact for the air pressostat LP must be in the off position (LP test) so as to feed terminal 4.
- The gas pressostat contacts GP and the safety thermostat and pressostat contacts W must also be closed.

Start-up program

A Start-up

(R closes the start-up control ring between terminals 4 and 5)

The programmer starts up.At the same time the ventilator motor is fed through terminal 6 (only for pre-ventilation) and, after t7, the ventilator motor or the combustion gas exhaust fan is fed through terminal 7 (pre-ventilation and post-ventilation).

At the end of t16, the command opening the damper passes through terminal 9; during the damper opening time the programmer does not move since terminal 8, through which the programmer is fed, is dead.

Only once the damper is fully open and the limit contact switch A has switched on, feeding terminal 8, does the programme proceed.

t1 Pre-ventilation time with damper fully open (nominal air flow).

Shortly after the beginning of the pre-ventilation time, the air pressostat should switch off the current between terminals 4 and 13;otherwisethe apparatus would block (air pressure monitor).

At the same time the terminal 14 should be live since current feeding the ignition transformer and the fuel valves passes through this circuit.

During pre-ventilation time the flame detector circuit is checked and in the event of an operational defect the monitor brings about a block.

At the end of the pre-ventilation time the monitor automatically moves the damper servo-motor, through terminal 10, to the flame ignition position which is governed by the auxiliary contact "M".

During this period the programmer stops until terminal 8, is again activatedthrough contact "M".

After a few seconds the little programmer motor is directly fed by the active part of the apparatus.

After this point terminal 8 plays no further part in the burner ignition process.

Mono-tube burner

t3 Pre-ignition time waiting the response from the fuel valve at terminal 18.

t2 Safety time (start up flame strenght); at the end of the safety time a flame signal should appear at terminal 22 of the amplifier and it should stay on until a regulation stop; if this does not happen the mechanism will block.

t4 Interval; at the end of t4, terminal 19 is live.

t5 Interval At the end of t5 terminal 20 is live.At the same time the monitor outlets from 9 and 11 and terminal 8 into the active part of the apparatus are kept galvanically separatedso as to protect the monitor itself from recovery voltage through the capacity regulator circuit.

Twin-tube burners (**)

t3 Preignition time until the all clear to the pilot burner valve at terminal 17.

t2 First safety time (pilot flame strenght); at the end of the safety time a flame signal should appear at terminal 22 of the amplifier and it should stay on, until a regulation stop; if it does not, the apparatus will block.

t4 Interval until the consent to the fuel valve at terminal 19, for the first flame of the main burner.

t9 2nd safety time; at the end of the second safety time the main burner should be lit by means of the pilot. At the end of this period, terminal 17 is dead and therefore the pilot burner will be out.

t5 Interval; at the end of t5 terminal 20 is live. At the same time the monitor outlets from 9 to 11 and the terminal 8at the input of the active part of the apparatus are galvanically separated so as to protect the apparatus itself from recovery voltage through the strenght regulator circuit.

When the strenght regulator LR at terminal 20 gives the consent, the start-up programme for the apparatus comes to an end. Depending on time variants, the programmer stops either immediately or at the end of a set time, without effecting the position of the contacts.

B Operational position of the burner

B-C Burner operation (production of heat)

While the burner is working the strnght regulator controls the damper, according to the demand for heat, by means of the positioning at nominal load of the auxiliary contact "V" of the damper servocontrol.

C Regulation stop for operation of "R"

When there is a regulation stop the fuel valves immediately close. At the same time the programmer starts to programme:

t6 Post-ventilation time (post-ventilation with the ventilator "G" at terminal 7).Shortly after beginning of the post-ventilation time terminal 10 becomes live and moves the damper to the "MIN" position. The full closure of the damper only happens towards the end of the post-ventilation time and is prompted by an automatic signal from terminal 11

t13 Admissible post-ignition time

During this time the flame monitor circuit may still receive a flame signal without the apparatus blocking.

D-A End of automatic programme

At the end of t6, at the point where the programmer and the automatic contacts have reverted to the starter position, the detection probe test restarts.

During an operational stop even an unscheduled flame signal lasting a few seconds can cause a block because during this period an NTC in the circuit acts as retarder.This means that brief unscheduled influences cannot cause a block.

(**) Times t3, t2 and t4 only apply only to safety devices in the series 01.

Specifications

Mains voltage	220V -15%...240V +10%
Frequency	50Hz -6%...60Hz +6%
Absorbed capacity	3.5 VA
Built-in fuse	T6.3/250E slow action DIN41571 No. 451915070
External fuse	max. 16A
Interference	N-VDE0875
Flow permitted at terminal 1	5A (DIN 0660 AC3)
Flow permitted at control terminals	4A (DIN 0660 AC3)
Flow at monitor contacts:	
input at terminals 4 & 5	1A, 250V
input at terminals 4 & 11	1A, 250V
input at terminals 4 & 14	function of the load at terminals 16 and 19, min.1A, 250V
Emplacement	Any
Protection	IP40
Permitted ambient temp	-20...+60° C
Min.temperature (trans/storage)	-50° C
Weight:	
apparatus	approx. 1,000g.
base	approx. 165g.

Ionisation monitor

voltage in detector electrode	
normal working	330V ±10%
test	380V ±10%
short circuit current	max. 0,5 mA
Ionisation current, min.request	6 µA
max. permitted length for connecting cables	
normal cable (laid separately**)	80m
armoured cable(high frequency)	protection at terminal 22 140m

UV monitor

Voltage in UV detector	
normal working	330V ±10%
test	380V ±10%
Detector current, min. request*	70µA
Max. detector current	
normal working	630 µA
test	1300 µA
Max.length of connecting cable	
normal cable (laid separately**)	100m
armoured cable (high frequency)	protected at terminal 22 200m
Weight	
QRA2	60 g
QRA10	450 g.

*Connect up in parallel to the measuring device a condenser 100µF, 10...25V.

** The wire connecting up the detector electrode should not be in the same sleeve as the other conductor wires.

Ignition spark monitor with QRE1 series 02 detector

Minimum detector current	30µA

Operating times

t7 initial delay for ventilator G2	2	
t16 initial delay of air damper OPEN consent		4
t11 opening time for damper	any	
t10 initial delay for air pressure monitor	8	
t1 pre-ventilation time with damper open	36	
t12 travel time for air damper to MIN position	any	
t3 t3' pre-ignition time	t3	4
	t3	'-
t2 t2' safety time (1st safety time for burners with intermittent pilot lighter	t2	2
	t2	'-
t4 t4' interval between start of t2 and response to valve at terminal 19	t4	10
	t4	'-
t9 2nd safety time for burners with intermittent pilot lighter	2	
t5 interval between end of t4 and response at terminal 20	10	
t20 interval before programmer cuts out after start-up- duration of start-up		60
t6 post-ventilation time (G2 only)		12
t13 permitted post-ignition time		12
t16 initial delay from opening consent of the air damper		

t20 interval until the automatic shut-off of the programming mechanism after the burner start

Key

A	limit contact switch for damper OPEN position
AI	block remote signal
AR	main relay (working network) with contacts "ar"
AS	Monitor fuse
BR	block relay with "br" contacts
BV	fuel valve
EK	reset button
FE	detector electrode of ionisation circuit
FR	flame relay with "fr" contacts
G	ventilator motor or burner motor
GP	gas pressure switch
H	main interruptor switch
L	block stoppage LED
LK	air damper
LP	air pressostat
LR	safety regulator
M	auxiliary contact switch for damper "MIN" position
QRA	UV detector
QRE	ignition spark detector
R	thermostat or pressostat
S	fuse
SA	damper servo-motor
SM	synchronous programmer motor
V	flame signal amplifier
V	in case of servo-motor: auxiliary contact for response to fuel valve with regard of damper position
W	safety pressostat or thermostat
Z	ignition transformer
Z	in case of servomotor: end of limit contact switch for damper CLOSED position
ZBV	pilot burner fuel valve
°	for mono-tube burners
°°	for twin-tube burners

(1)	input for raising QRA detector voltage to test level
(2)	input for excitation of flame relay during flame detector test circuit (contact XIV) and during safety time (contact IV)
(3)	Do not press EK for more than 10 seconds

Programmer diagram

t1	pre-ventilation time
t2	safety time
*t2	'1st safety time
t3	pre-ignition time
*t3	'pre-ignition time
t4	interval for creating current between terminals 18 and 19
*t4	'interval for creating current between terminals 17 and 19
t5	interval for creating current between terminals 19 and 20
t6	post-ventilation time
t7	interval between startup consent and current created at terminal 7
t8	duration of start-up
*t9	2nd safety time
t10	interval before air pressure monitoring begins
t11	damper opening travel time
t12	damper closure travel time
t13	permissible post-combustion time
t16	initial delay of damper OPEN response
t20	interval before programmer automatically stops

* These times are valid with the use of a series 01 safety device for monitoring burners with intermittent pilot lighter.

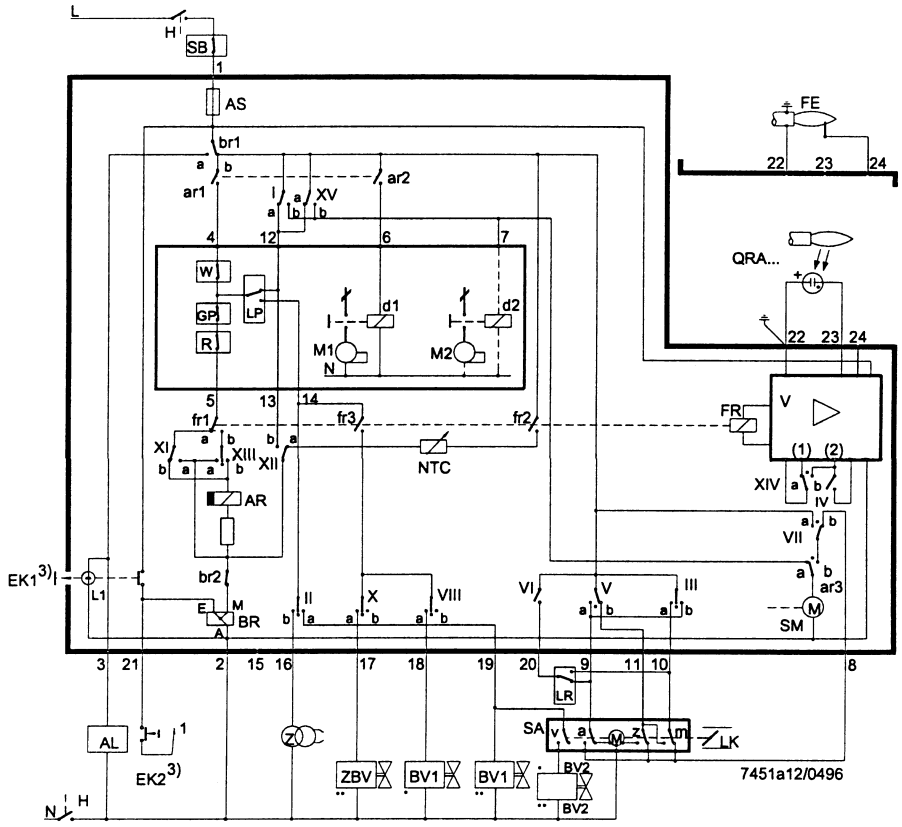
L
H
SB
1
AS
br1
ar1
ar2
XV
W
GP
R
LP
d1
d2
M1
M2
N
FE
22
23
24
QRA...
V
FR
(1) (2)
XIV
IV
VII
ar3
SM
fr1
fr3
fr2
XI
XIII
XII
NTC
AR
EK1 3)
L1
br2
E
M
BR
A
II
X
VIII
VI
III
3
21
2
15
16
17
18
19
20
9
11
10
8
LR
AL
EK2 3)
ZBV
BV1
BV2
SA
LK
7451a12/0496

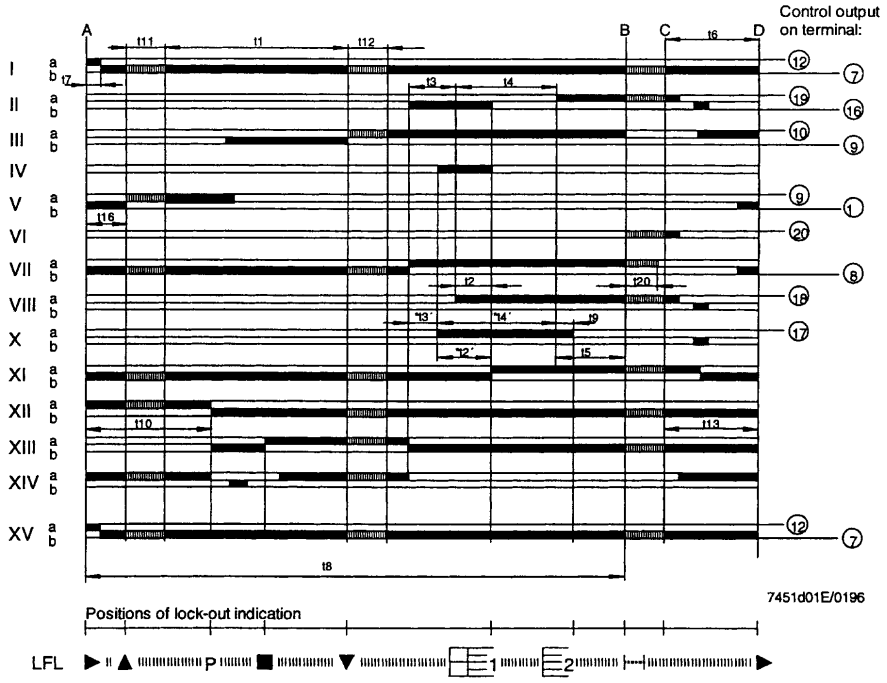
Control output on terminal:
A
B
C
D
t11
t1
t12
t6
t7
t3
t4
t16
t2
t20
t13'
t14'
t9
t12'
t5
t10
t13
t8
I
II
III
IV
V
VI
VII
VIII
X
XI
XII
XIII
XIV
XV
7451d01E/0196
Positions of lock-out indication
LFL
P
1
2

C.I.B. UNIGAS S.p.A.
Via L.Galvani, 9 - 35011 Campodarsego (PD) - ITALY
Tel. +39 049 9200944 - Fax +39 049 9200945/9201269
web site: www.cibunigas.it - e-mail: cibunigas@cibunigas.it

Note: specifications and data subject to change. Errors and omissions excepted.

MANUALE USER SUPPORT

MULTI-THERMOSTAT

MCX06C

MCX06C is a multi-thermostat with four 100k NTC inputs. It can control up to 4 temperatures showing them (not more than 2 at the same time) on a couple of displays.
It is used to check and adjust oil heater temperatures. it works as follows:
as soon as the burner control gives the GO to the digital 1 input (terminals DI1-COM), the adjustment program runs (the relevant LED is ON). Reading the outlet temperature through the probe **Pb3** (terminals AI3-COM), a PID signal is produced. This signal becomes the set-point for the electric resistors. The electric resistors temperature is read through the probe **Pb1** (terminals AI1-COM) so that a second PID signal is produced. This second PID drives a couple of SCR by means of 0-10 V impulses in order to control the electric resistors temperature.
When the burner is in stand-by, resistor set-point is kept at the temperature set in parameter "**p30**" (see parameter group **REG**).
Probe **Pb4** (terminals AI4-COM) controls the inner heater temperature. As soon the relevant set-point is got, it drives the output number 4 (terminals C4-NO4) linked to the relais KTCN. This allows the oil pump to start and also the burner control proceeds with its cycle.
When set-point **trS** is got to, output number 5 is ON (terminals C5-NO5) linked to the relais KTRS. It switches the resistors off and activates an alarm on the device.
Probe **Pb2** (terminals AI2-COM), when fitted, drives output number 2 (terminals C2-NO2) linked to the relais KTCI. This allows the burner control to proceed with ignition.
See below the set-point recommended figures.

User interface:

Device:

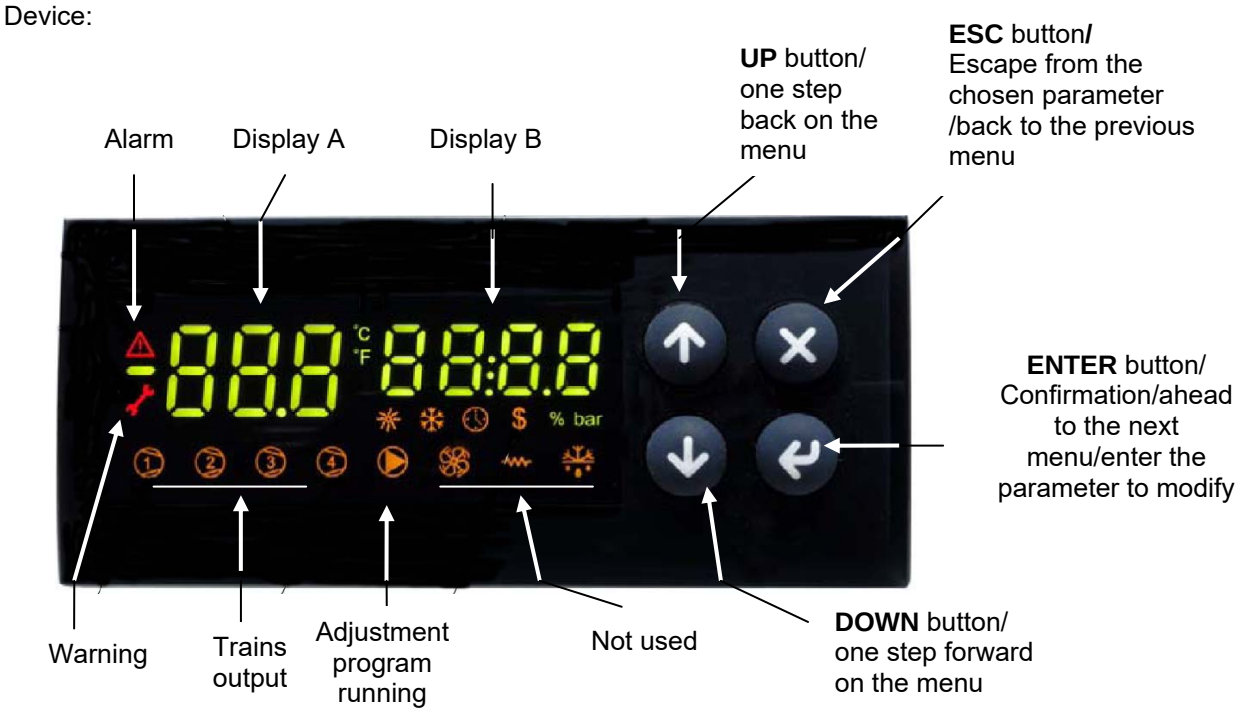

Note :
In normal operation, the display A shows the oil tank resistor temperature (probe Pb1).
In normal operation, the display B shows the oil output temperature (probe Pb3).

Connections from terminal side :

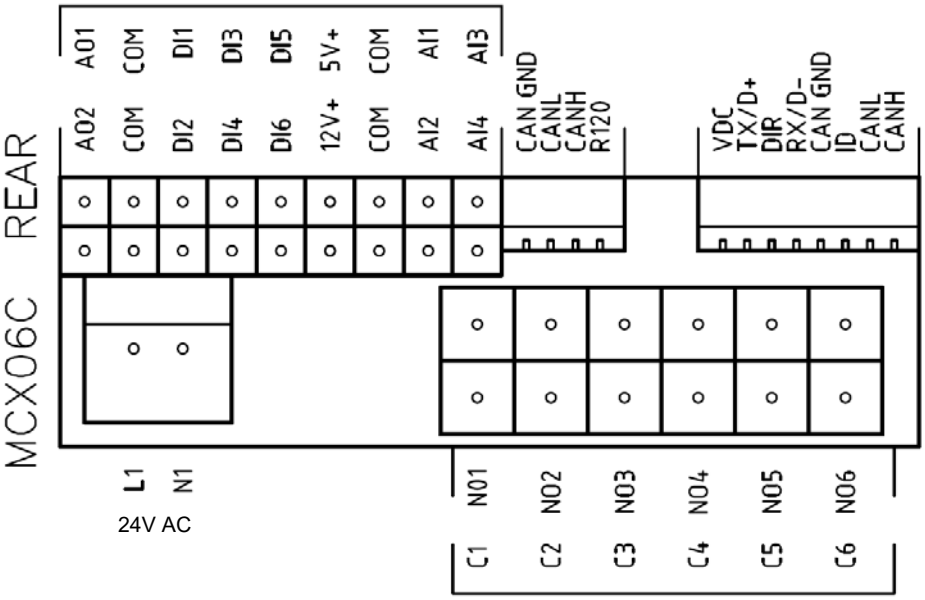

Probe connection:

input **AI1** = probe **Pb1** = set-point "**tr**" = oil heater temperature probe;
input **AI2** = probe **Pb2** = set-point "**tCI**" = plant consent temperature probe (when installed);
input **AI3** = probe **Pb3** = set-point "**OIL**" = oil heater output temperature probe (PID regulation);
input **AI4** = probe **Pb4** = set-point "**tcn**" = oil heater consent temperature probe.

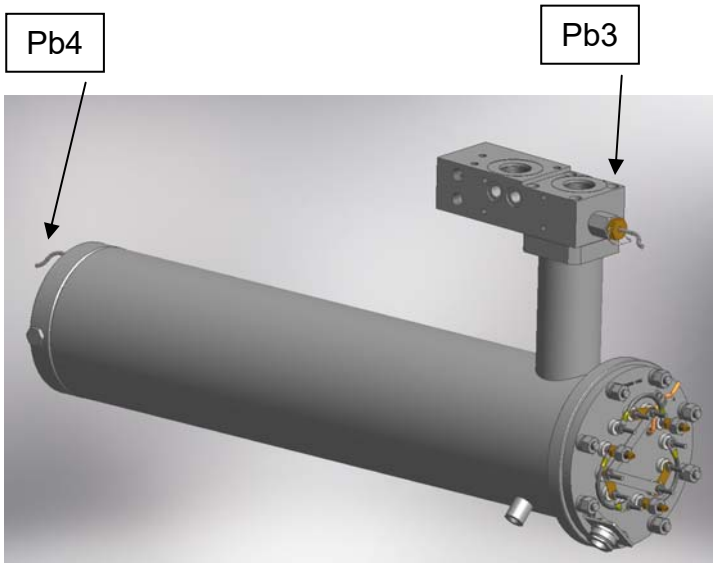

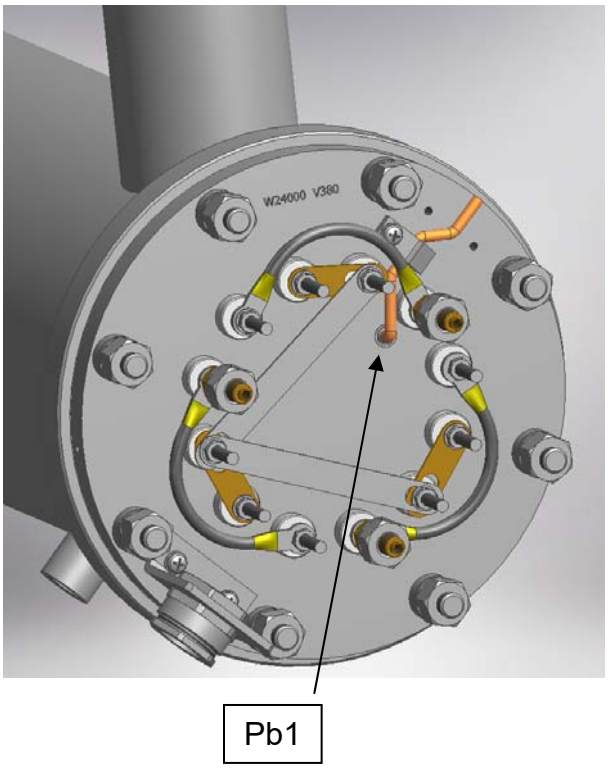

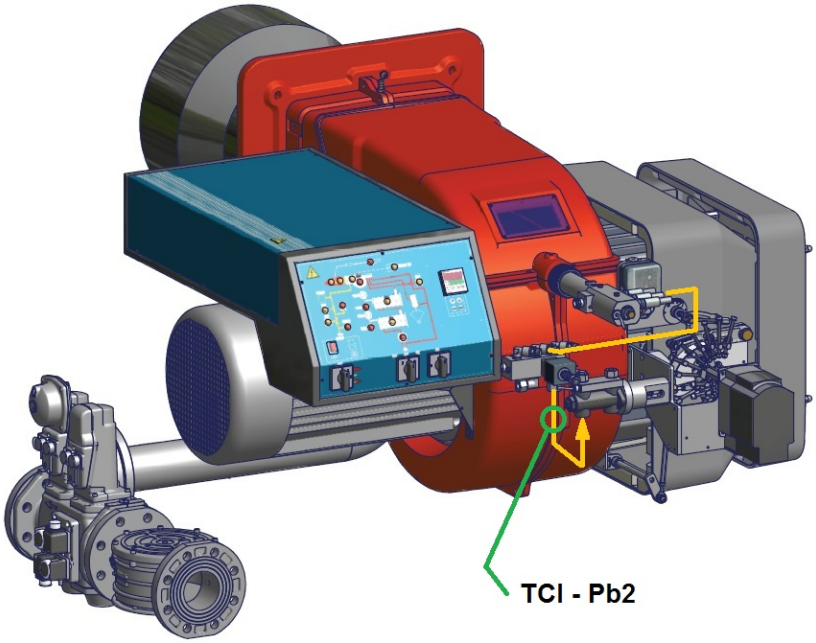

(**tCI - Pb2** probe only for mechanical atomizing burners)

Menu :
To enter the menu below, keep pushing **ENTER** for more than 3 s.

Menu code	Sub-menu code	Function	Notes
Prb		Probes values	You can see in sequence the 4 probe values (UP and DOWN keys): the probe code is on display A (Pb1,..., Pb4) and the probe value is on display B (not fitted or out of work probes show "----").
Log		Login	It defines the access level to menu and parameters (password)
	PAS	Password	Password input
Par		Parameters menu	Access to parameters (you have to login first)
	CnF	Configuration menu	Parameter configuration
	rEG	Regulation menu	Set to set-point, probe, thresholds etc.
ALA		Alarm menu	Access to alarm management
	Act	Active alarms	Show the active alarms
	rES	Reset alarms	Reset of the manual reset alarms
Loc		Lock/Unlock functions	Not used
InF	rEL	Software version	Installed software version
tUN		Autotuning	Activation On, deactivation ESC PID parameter autotuning

Login:
All the parameters inside the **Par** menu are locked by a password.
Without password, only set-points can be modified.
To login, on the log menu, press **ENTER** for more than 3 s. Input your password (level 2 or 3) inside **PAS**
With password for level 3 all the data can be set.

submenu **CnF - configuration parameters group :**

Menu	Parameter	Description	Additional description	Min	Max	Default	U.M.	Visibility condition	Password level	Modbus index
CnF		**CONFIGURATION**							0	
AI1		Analog Input 1							1	
	A1P	Probe 1 Presence	This parameter enables or disables the probe	0	1	1			2	1
	A1C	Calibration Probe 1	Don't modify it	-20,0	20,0	0,0	°C	A1P >0	3	2
AI2		Analog Input 2							1	
	A2P	Probe 2 Presence	This parameter enables or disables the probe	0	1	1			2	3
	A2C	Calibration Probe 2	Don't modify it	-20,0	20,0	0,0	°C	A2P >0	3	4
AI3		Analog Input 3							1	
	A3P	Probe 3 Presence	This parameter enables or disables the probe	0	4	1			2	5
	A3L	Min. Value conversion AI3	Don't modify it	-999,9	999,9	0,0		A3P >2	3	6
	A3H	Max. Value conversion AI3	Don't modify it	-999,9	999,9	30,0		A3P >2	3	7
	A3C	Calibration Probe 3	Don't modify it	-20,0	20,0	0,0	°C	A3P >0	3	8
AI4		Analog Input 4							1	
	A4P	Probe 4 Presence	This parameter enables or disables the probe	0	4	1			2	9
	A4L	Min. Value conversion AI4	Don't modify it	-999,9	999,9	0,0		A4P >2	3	10
	A4H	Max. Value conversion AI4	Don't modify it	-999,9	999,9	30,0		A4P >2	3	11
	A4C	Calibration Probe 4	Don't modify it	-20,0	20,0	0,0	°C	A4P >0	3	12
dI		Digital input							1	
	dI1	Input 1 polarity (Pump)	Change type of digital input (NC o NO)	0	1	1			3	13
	dI2	Alarm polarity from input 2	Change type of digital input (NC o NO)	0	2	2			2	14
	dI3	Alarm polarity from input 3	Change type of digital input (NC o NO)	0	2	2			2	15
	dI4	Alarm polarity from input 4	Change type of digital input (NC o NO)	0	2	2			2	16
	dI5	Alarm polarity from input 5	Change type of digital input (NC o NO)	0	2	2			2	17
	dI6	Alarm polarity from input 6	Change type of digital input (NC o NO)	0	2	2			2	18
dI		Digital output Alarm and Warning							1	
	dO5	Polarity output Warning	Change type of digital input (NC o NO)	0	1	0			3	19
	dO6	Polarity output Alarm	Change type of digital input (NC o NO)	0	1	0			3	20
SIC		Safety probe							1	
	SIp	Selection of safety probe	Probe which also activates the relay Warning (ns. KTRS)	0	4	4			3	21
SyS		Syistem							0	
	dSA	display A output	Probe temperature or set-point to be displayed in the left display	0	8	1			3	22
	dSb	display B output	Probe temperature or set-point to be displayed in the right display	0	8	3			3	23
PAS		Password							1	
	PL1	Password level 1		0	9999	0			1	32
	PL2	Password level 2		0	9999				2	33
	PL3	Password level 3		0	9999				3	34

Menu	Parameter	Description	Additional description	Min	Max	Default	U.M.	Visibility condition	Level	Modbus index
tUN		Autotuning							3	
	tU1	Output temperature hysteresis	Don't modify it	0	50,0	0,5	°C		3	35
	tU2	Startup number	Don't modify it	0	5	2			3	36
	tU3	Measurement cycles number	Don't modify it	1	4	2			3	37
	tU4	Max. differential command exit	Don't modify it	0,01	10,00	10,00	V		3	38
	tU5	Differential reduction exit command (%)	Don't modify it	0	100	15			3	39
	tU6	Calculating mode: 0= Symmetrical; 1=Asymmetrical; 2=Simple	Don't modify it	0	2	2			3	40
	tU7	Enabling	Don't modify it	0	1	1			3	41

Submenu **REG – regulation parameters group :**

Menu	Parameter	Description	Additional description	Min	Max	Default	U.M.	Visibility condition	Level	Modbus index
REG		**REGULATION**							0	
Pb1		Probe 1							0	
	rES	Set-point Probe 1 (Tank resistor)	Don't modify it	-50,0	200,0	0,0	°C		3	42
	AL1	Probe 1 - Low Temperature Alarm Threshold	Don't modify it	-50,0	200,0	-50,0	°C		3	43
	AH1	Probe 1 - High Temperature Alarm Threshold	Don't modify it	-50,0	200,0	200,0	°C		3	44
	d01	Probe 1 differential		0,0	20,0	3,0	°C		3	45
Pb2		Probe 2							0	
	tCI	Set-point Probe 2 (Plant Consent)	Plant consent according to table "**Set point adjustment**"	-50,0	200,0	120,0	°C		0	46
	AL2	Probe 2 - Low Temperature Alarm Threshold	Don't modify it	-50,0	200,0	-50,0	°C		2	47
	AH2	Probe 2 - High Temperature Alarm Threshold	Don't modify it	-50,0	200,0	200,0	°C		2	48
	d02	Probe 2 differential		0,0	20,0	3,0	°C		2	49
Pb3		Probe 3							0	
	rE3	Type of regulation of probe 3 (Oil tank exit)	Type of regulation 0= thermostat; 1= PID (don't modify)	0	1	1			3	50
	OIL	Set-point Probe 3 (Oil tank exit)	Nozzle oil temperature according to the table "**Set point adjustment**"	-50,0	200,0	130,0	°C		0	51
	AL3	Probe 3 - Low Temperature Alarm Threshold (Oil tank exit)	Don't modify it	-50,0	200,0	-50,0	°C		2	52
	AH3	Probe 3 - High Temperature Alarm Threshold (Oil tank exit)	Don't modify it	-50,0	200,0	200,0	°C		2	53
	Pb3	Proportional band for PID Probe 3 (Oil tank exit)	Proportional band for first PID regulation	0,0	200,0	60,0			3	54
	db3	Dead Zone for PID Probe 3 (Oil tank exit)	Dead zone for first PID regulation	0,0	20,0	0,0	°C	rE3 =1	3	55
	rt3	Integral Time (Ti) for PID Probe 3 (Oil tank exit)	Integral time for first PID regulation	0,0	1000,0	120,0	s	rE3 =1	3	56
	dt3	DerivativeTime (Td) for PID Probe 3 (Oil tank exit)	Derivative time for first PID regulation (~ ¼ di rt3)	0,0	300,0	30,0	s	rE3 =1	3	57
	db3	Dead Zone for PID Probe 3 (Oil tank exit)	Dead zone for first PID regulation	0,0	20,0	0,0	°C	rE3 =1	3	55

Menu	Parameter	Description	Additional description	Min	Max	Default	U.M.	Visibility condition	Level	Modbus index
	pi1	Overshooting for Integral action (Oil tank exit)	Don't modify it	100	1000	200		rE3 =1	3	58
	pi2	Derivative action enabling (Oil tank exit)	Don't modify it	0	1	1		rE3 =1	3	59
	pi3	Filtering factor for derivative action (Oil tank exit)	Don't modify it	1	100	20		rE3 =1	3	60
	pi4	Duty cicle PWM for output DO3 and/or AO1 (0-10V)	Don't modify it	1	300	5	s	rE3 =1	3	61
	SL3	Output selection DO3 and/or AO1 (0-10V)	Digital selection output for control thyristors; Don't modify it	0	2	AO1			3	62
	p21	Proportional band for PID Probe 1 (Tank resistor)	Proportional band for second PID regulation	0,0	200,0	50,0		rE3 =1	3	63
	p22	Dead Zone for PID Probe 1 (Tank resistor)	Dead zone for second PID regulation	0,0	20,0	0,0	°C	rE3 =1	3	64
	p23	Integral Time (Ti) for PID Probe 1 (Tank resistor)	Integral time for second PID regulation	0,0	1000,0	110,0	s	rE3 =1	3	65
	p24	DerivativeTime (Td) for PID Probe 1 (Tank resistor)	Derivative time for second PID regulation	0,0	300,0	23,0	s	rE3 =1	3	66
	p25	Overshooting for Integral action (Tank resistor)	Don't modify it	100	1000	200		rE3 =1	3	67
	p26	Derivative action enabling (Tank resistor)	Don't modify it	0	1	1		rE3 =1	3	68
	p27	Filtering factor for derivative action (Tank resistor)	Don't modify it	1	100	20		rE3 =1	3	69
	p28	Min Output PID Probe 3 (Oil tank exit)	Minimum value tank resistor set-point (delta of 100°C above p29)	0,0	1000,0	80,0	°C	rE3 =1	3	70
	p29	Max Output PID Probe 3 (Oil tank exit)	Maximum valuetank resistor set-point	0,0	1000,0	180,0	°C	rE3 =1	3	71
	SP0	Set-point Tank Resistor with oil pump stops (stand by)	Set-point of maintaining resistance during stand by "**Set point adjustment**"	-50,0	200,0	140,0	°C	rE3 =1	0	72
Pb4		Probe 4							0	
	tcn	Setpoint Probe 4 (Oil consent)	Oil consent according table "**Set point adjustment**"	-50,0	200,0	110,0	°C		0	73
	AL4	Low Threshold Probe 4		-50,0	200,0	-50,0	°C		2	74
	trS	Probe 4 - High Temperature Alarm Threshold (Safety Thermostat)	Tank resistor safety temperature according table "**Set point adjustment**"	-50,0	200,0	190,0	°C		0	75
	d04	Probe 4 differential		0,0	20,0	3,0	°C		2	76

Alarms & Warning:
When the red triangle on the top left lights, one or more alarms are activated.
When the red key on the left lights, the output N05-C5 is active and the relay **KTRS** switches the resistors OFF.
Check the reason, correct the failure and, as soon as the temperature is lower than **trS**, reset it through **ALA**/**rES .**
In order to show active alarms and warnings, select the relevant menu through **ALA**/**Act**.and, using the **UP** and **DOWN** buttons, scroll the lines.
In order to perform the manual reset, select **ALA**/**rES**.

Code	Description	Sourse	Active simbol	Reset type
trS	High temperature resistors alarm	probe Pb4 > value trS	red key	Manual
EP1	Probe Pb1 fault	Probe Pb1 fault	red triangle	Automatic
EP2	Probe Pb2 fault	Probe Pb2 fault	red triangle	Automatic
EP3	Probe Pb3 fault	Probe Pb3 fault	red triangle	Automatic
EP4	Probe Pb4 fault	Probe Pb4 fault	red triangle	Automatic

Set point adjustment:

All the parameters inside the **Par** menu are locked by a password. The user can modify only set points, without using any passwords.
The oil viscosity at the nozzle, should be about 1,5°E, which guarantees correct and safe functioning of the burner.
The temperature values in the table, guarantee the respect of that parameter and are valid when the pre heating tank is installed on the burner. For different configurations , please refer to the chapter "Recommendations to design heavy oil feeding plants" on the burner manual
Here below recommended set points:

Menu path				Oil viscosity at 50 °C according to the letter shown in the burner model				
				P	**N**	**E**	**D**	**H**
				89 cSt	< 50 cSt	> 50 cSt < 110 cSt	> 110 cSt < 400 cSt	> 400 cSt < 4000 cSt
				12 °E	< 7°E	> 7 °E < 15 °E	> 15 °E < 50 °E	> 50 °E < 530 °E
Par								
rEG	Pb1	tr	Oil heater temperature probe	parameter not visible				
	Pb2	tCI	Plant consent temperature probe (when installed)	20 °C	70 °C	70 °C	70 °C	---
	Pb3	Oil	oil heater output temperature probe (PID regulation);	60-70 °C	110-120 °C	120-130 °C	130-140 °C	140-150 °C
		SP0	Set-point oil heater with oil pump stopped (stand-by)	45 °C	120 °C	130 °C	140 °C	150 °C
	Pb4	tcn	Oil heater consent temperature probe	40 °C	100 °C	100 °C	110 °C	120 °C
		trS	Safety temperature tank resistors (manual reset)	120 °C	190-200 °C	190-200 °C	190-200 °C	190-200 °C

The above temperature values are suggested and refer to a plant designed according to the prescriptions in the burner user manual.
The suggested values can change in reference to the fuel oil specifications.

USER MANUAL OF MULTI-THERMOSTAT

MCX06C

MCX06C is a multi-thermostat with four 100k NTC inputs. It can control up to 4 temperatures showing them (not more than 2 at the same time) on a couple of displays.
It is used to check and adjust oil heater temperatures.

User interface:
Device:

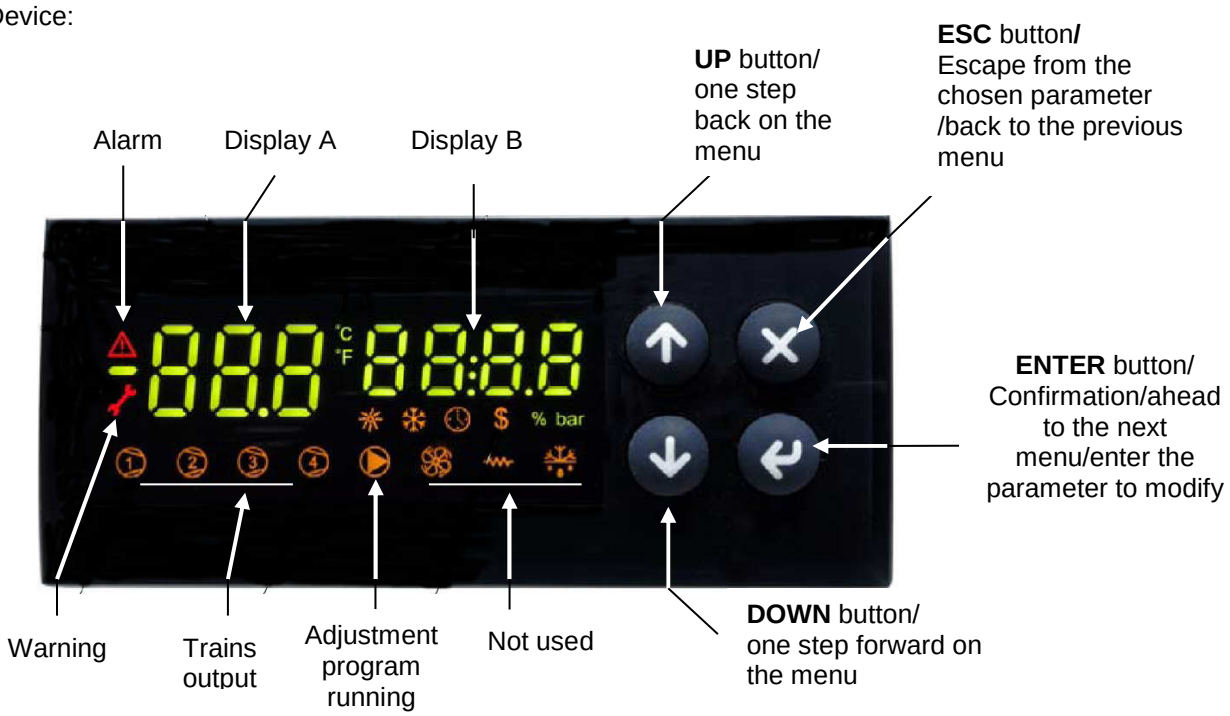

Note :
In normal operation, the display A shows the oil tank resistor temperature (probe Pb1).
In normal operation, the display B shows the oil output temperature (probe Pb3).

Connections from terminal side:

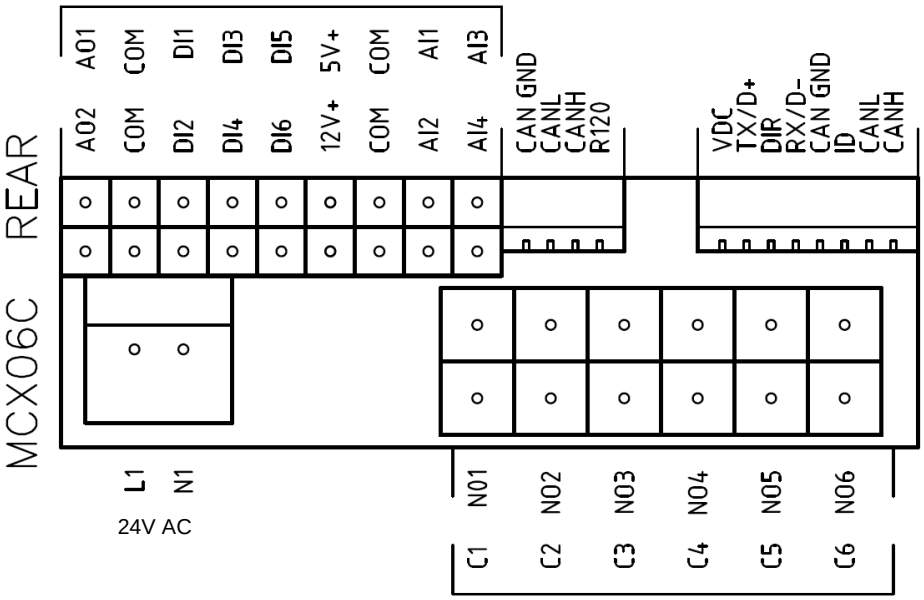

Probe connection:
input **AI1** = probe **Pb1** = set-point "**tr**" = oil heater temperature probe;
input **AI2** = probe **Pb2** = set-point "**tCI**" = plant consent temperature probe (when installed);
input **AI3** = probe **Pb3** = set-point "**OIL**" = oil heater output temperature probe (PID regulation);
input **AI4** = probe **Pb4** = set-point "**tcn**" = oil heater consent temperature probe.

Menu:
To enter the menu below, keep pushing **ENTER** for more than 3 s.

Menu code	Sub-menu code	Function	Notes
Prb		Probes values	You can see in sequence the 4 probe values (UP and DOWN keys): the probe code is on display A (Pb1,..., Pb4) and the probe value is on display B (not fitted or out of work probes show "----").
Log		Login	It defines the access level to menu and parameters (password)
	PAS	Password	Password input
Par		Parameters menu	Access to parameters (you have to login first)
	CnF	Configuration menu	Parameter configuration
	rEG	Regulation menu	Set to set-point, probe, thresholds etc.
ALA		Alarm menu	Access to alarm management
	Act	Active alarms	Show the active alarms
	rES	Reset alarms & Warning	Reset of the manual reset alarms and warning
Loc		Lock/Unlock functions	Not used
InF	rEL	Software version	Installed software version
tUN		Autotuning	Activation On, deactivation ESC PID parameter autotuning

Alarms & Warning:
When the red triangle on the top left lights, one or more alarms are activated.
When the red key on the left lights, the output N05-C5 is active and the relay **KTRS** switches the resistors OFF.
Check the reason, correct the failure and, as soon as the temperature is lower than **trS**, reset it through **ALA/rES .**
In order to show active alarms and warnings, select the relevant menu through **ALA/Act**.and, using the **UP** and **DOWN** buttons, scroll the lines.
In order to perform the manual reset, select **ALA/rES**.

Code	Description	Sourse	Active simbol	Reset type
trS	High temperature resistors alarm	probe Pb4 > value trS	red key	Manual
EP1	Probe Pb1 fault	Probe Pb1 fault	red triangle	Automatic
EP2	Probe Pb2 fault	Probe Pb2 fault	red triangle	Automatic
EP3	Probe Pb3 fault	Probe Pb3 fault	red triangle	Automatic
EP4	Probe Pb4 fault	Probe Pb4 fault	red triangle	Automatic

Set point adjustment:
All the parameters inside the **Par** menu are locked by a password.
The user can modify only set points (menu **rEG**), without using any passwords.
The oil viscosity at the nozzle, should be about 1,5°E, which guarantees correct and safe functioning of the burner.
The temperature values in the table, guarantee the respect of that parameter and are valid when the pre heating tank is installed on the burner. For different configurations , please refer to the chapter "Recommendations to design heavy oil feeding plants" in the burner manual.
Here below recommended set points:

Menu path				Oil viscosity at 50 °C according to the letter show n in the burner model				
				P	**N**	**E**	**D**	**H**
				89 cSt	< 50 cSt	> 50 cSt < 110 cSt	> 110 cSt < 400 cSt	> 400 cSt < 4000 cSt
				12 °E	< 7°E	> 7 °E < 15 °E	> 15 °E < 50 °E	> 50 °E < 530 °E
Par								
rEG	Pb1	tr	Oil heater temperature probe	parameter not visible				
	Pb2	tCI	Plant consent temperature probe (when installed)	20 °C	70 °C	70 °C	70 °C	---
	Pb3	Oil	oil heater output temperature probe (PID regulation);	60-70 °C	110-120 °C	120-130 °C	130-140 °C	140-150 ° C
		SP0	Set-point oil heater with oil pump stopped (stand-by)	45 °C	120 °C	130 °C	140 °C	150 °C
	Pb4	tcn	Oil heater consent temperature probe	40 °C	100 °C	100 °C	110 °C	120 °C
		trS	Safety temperature tank resistors (manual reset)	120 °C	190-200 °C	190-200 °C	190-200 °C	190-200 °C

The above temperature values are suggested and refer to a plant designed according to the prescriptions in the burner user manual. The suggested values can change in reference to the fuel oil specifications.

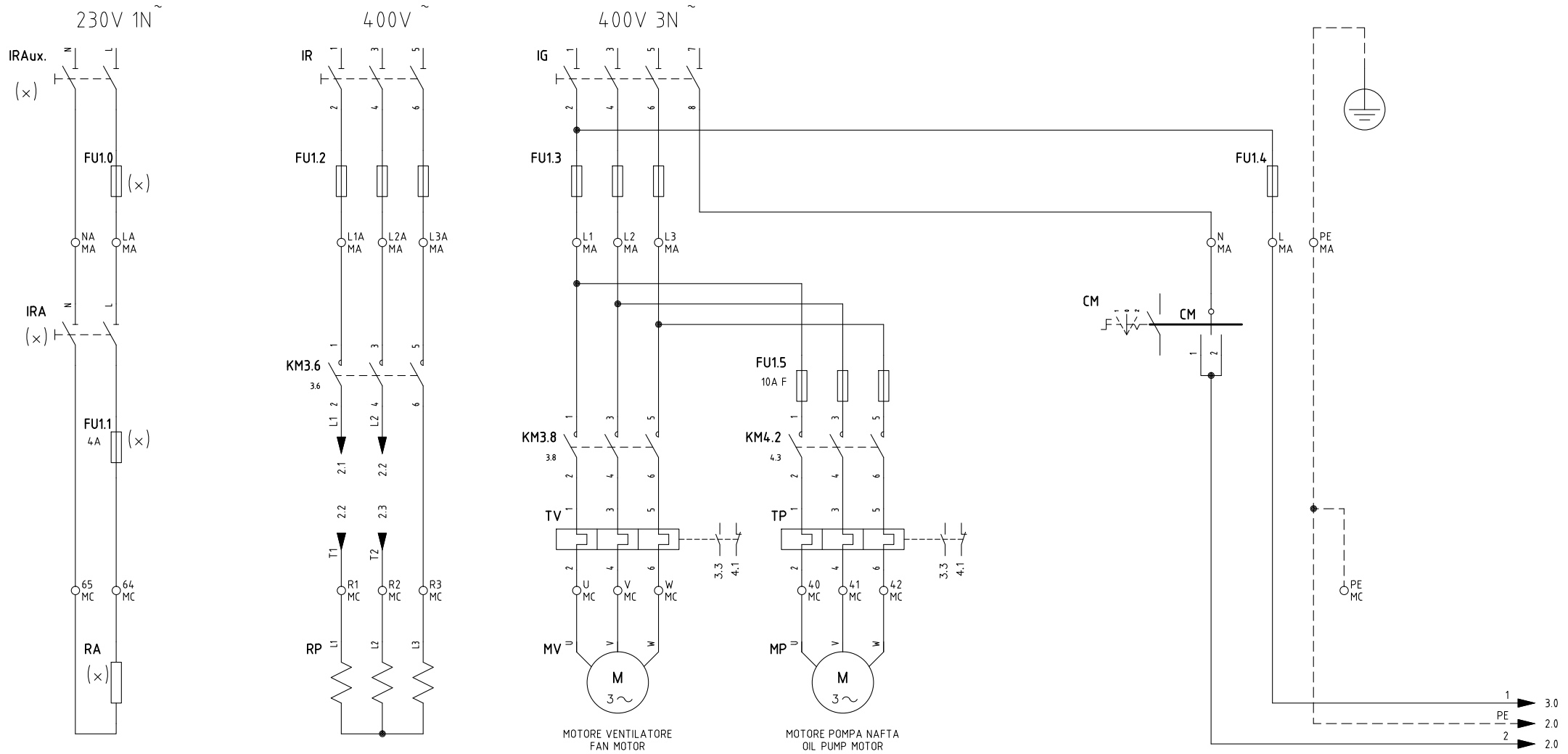

(×)
INSTALLATO SOLO SU ALCUNE VERSIONI
INSTALLED ON ANY VERSIONS ONLY

REV.	MODIFICA	DATA	FIRME
01	MODIFIED MCX06C CONNECTIONS	04/02/13	U. PINTON

UNIGAS

Impianto: *TIPO/TYPE KP60/.../KP93A – KR512A*
MODELLO Mx.PR.x.xx.A.x.xx

Descrizione: *CON MULTI–TERMOSTATO MCX06C*
WITH MCX06C MULTI–THERMOSTAT

Ordine:
Commessa:
Esecutore: U. PINTON
Data Controllato: 04/02/2012
Controllato: S. MARCHETTI

Data: 19/11/2012
Revisione: 01
Dis. N. 05 – 972

PREC.: /
FOGLIO: 1
SEGUE: 2
TOTALE: 9

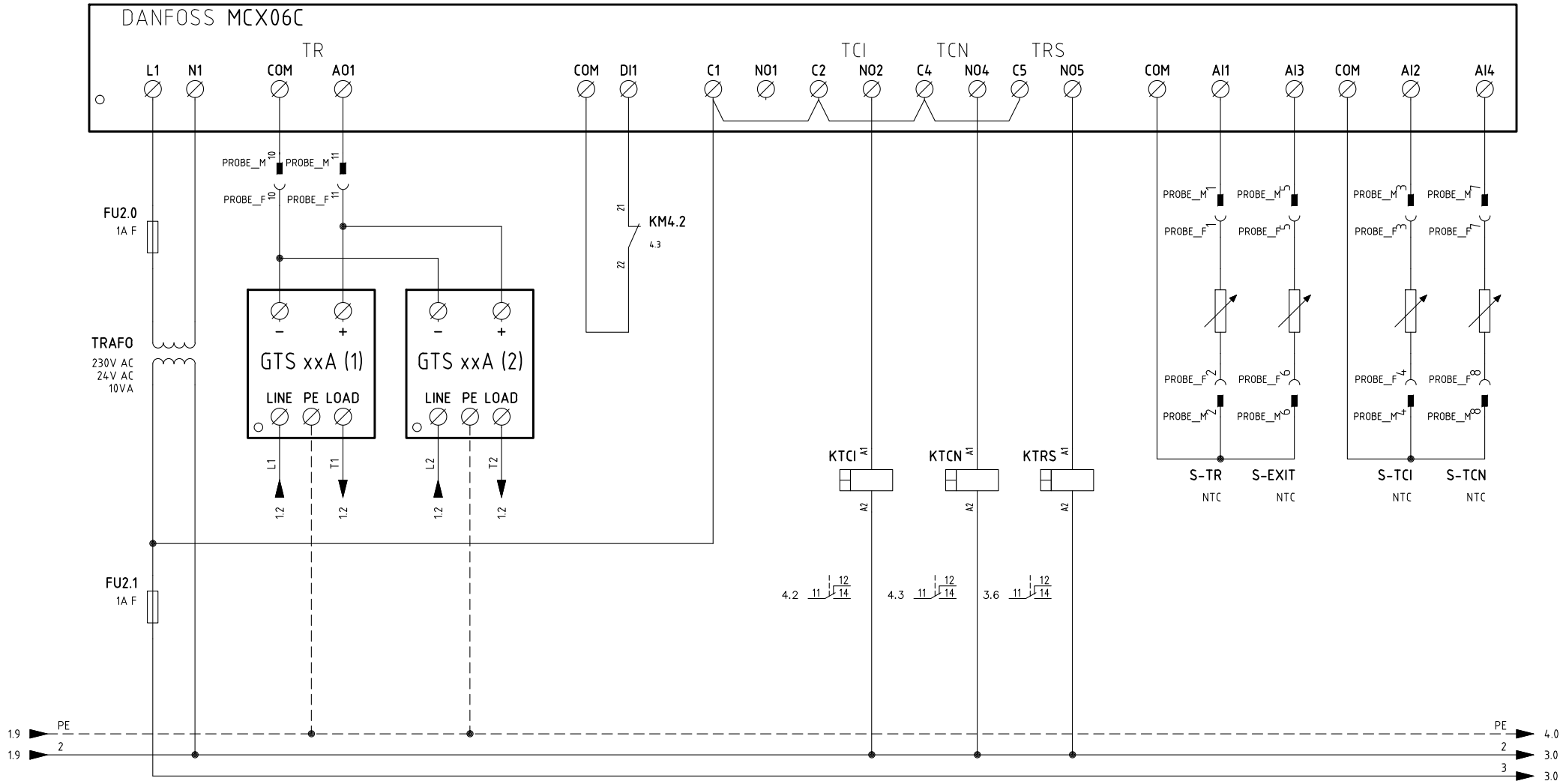

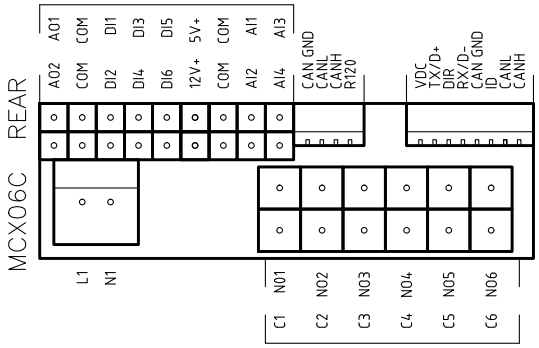

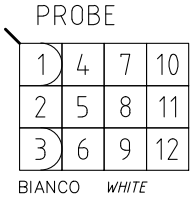

VISTA LATO COMPONENTI (SONDE)
COMPONENTS SIDE VIEW (PROBE)

Data 19/11/2012		PREC. 1	FOGLIO 2
Revisione 01			
Dis. N. 05 – 972		SEGUE 3	TOTALE 9

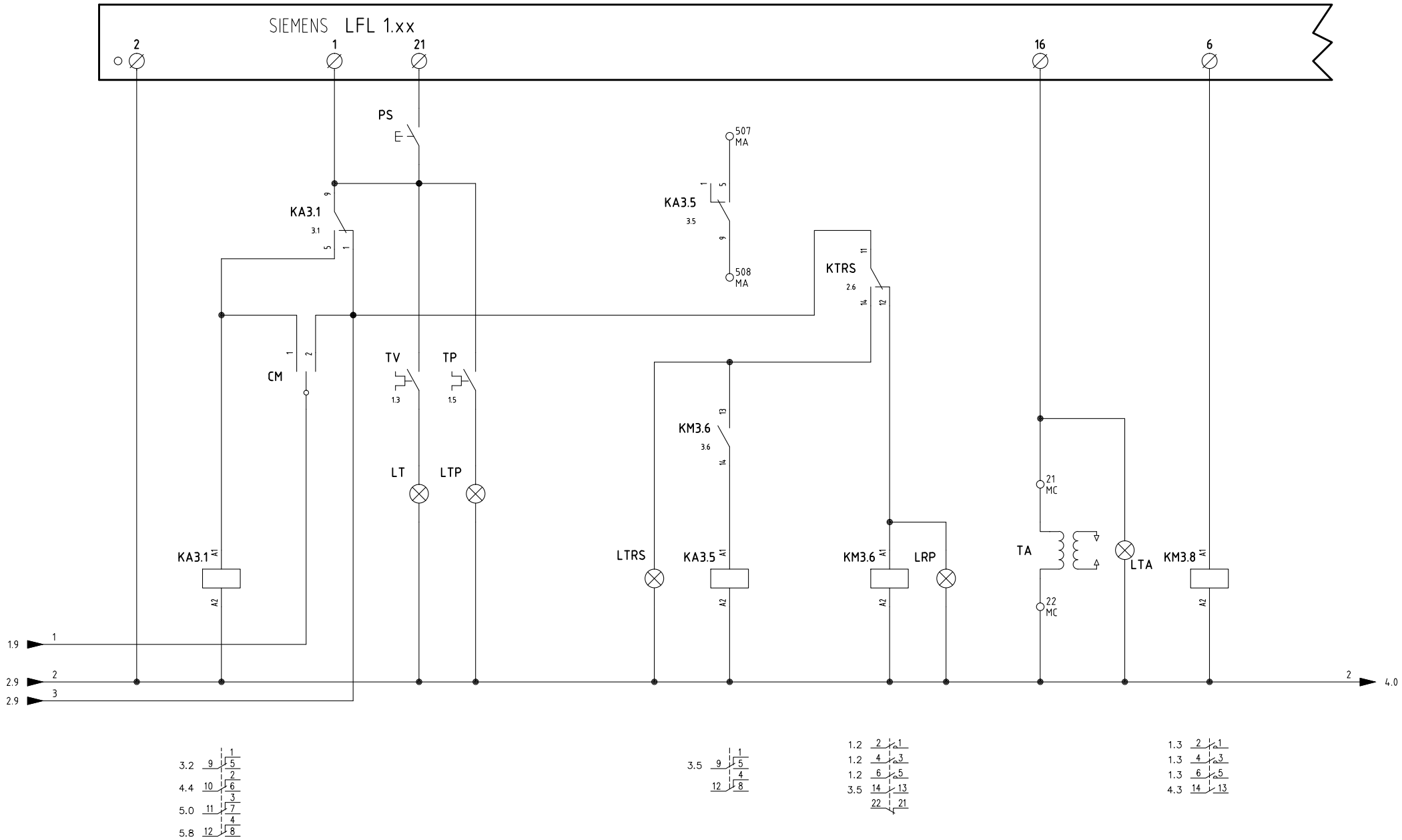

Data	19/11/2012	PREC.	FOGLIO
Revisione	01	2	3
Dis. N.	05 – 972	SEGUE	TOTALE
		4	9

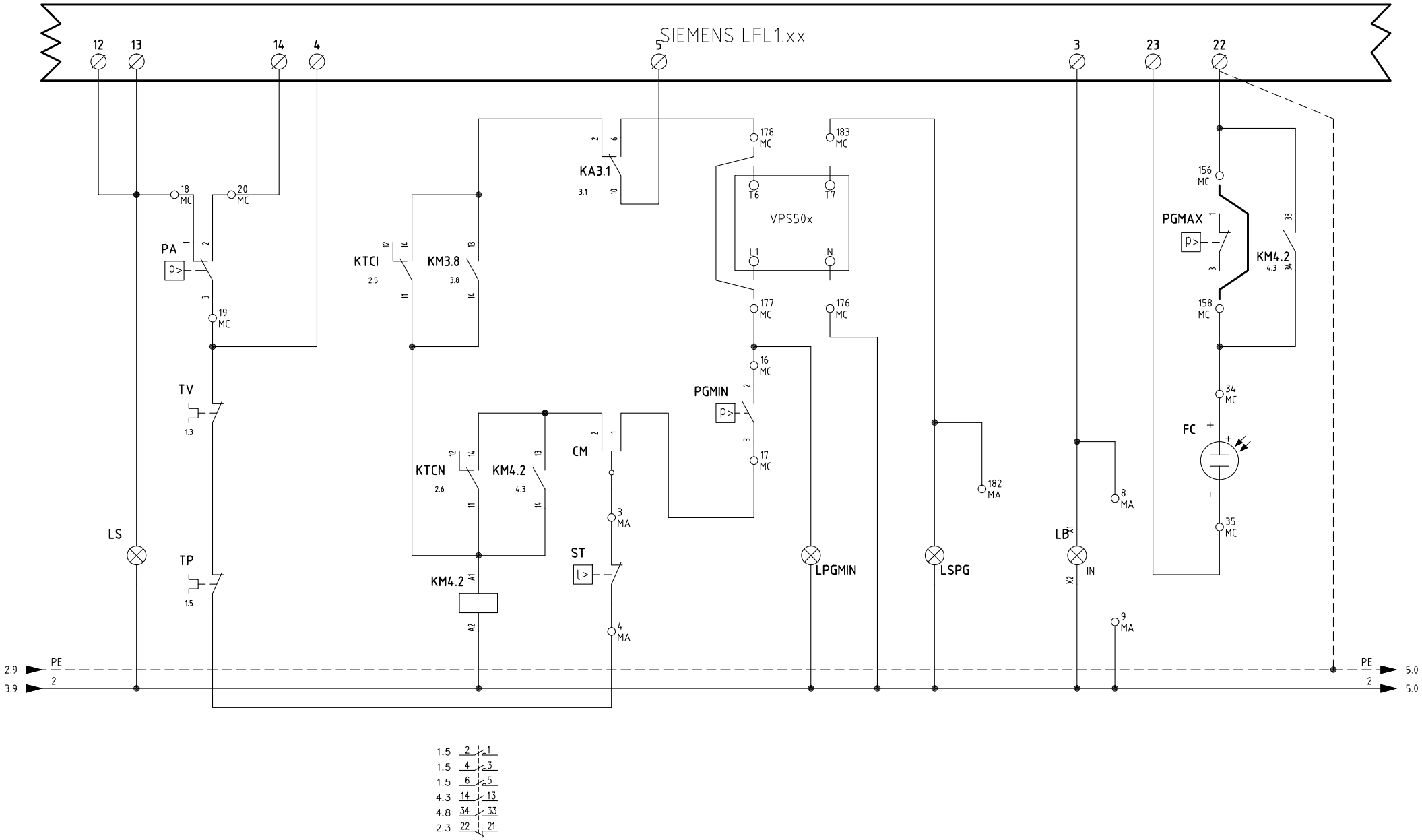

1.5	2	1
1.5	4	3
1.5	6	5
4.3	14	13
4.8	34	33
2.3	22	21

Data 19/11/2012		PREC.	FOGLIO
Revisione 01		3	4
Dis. N. 05 – 972		SEGUE	TOTALE
		5	9

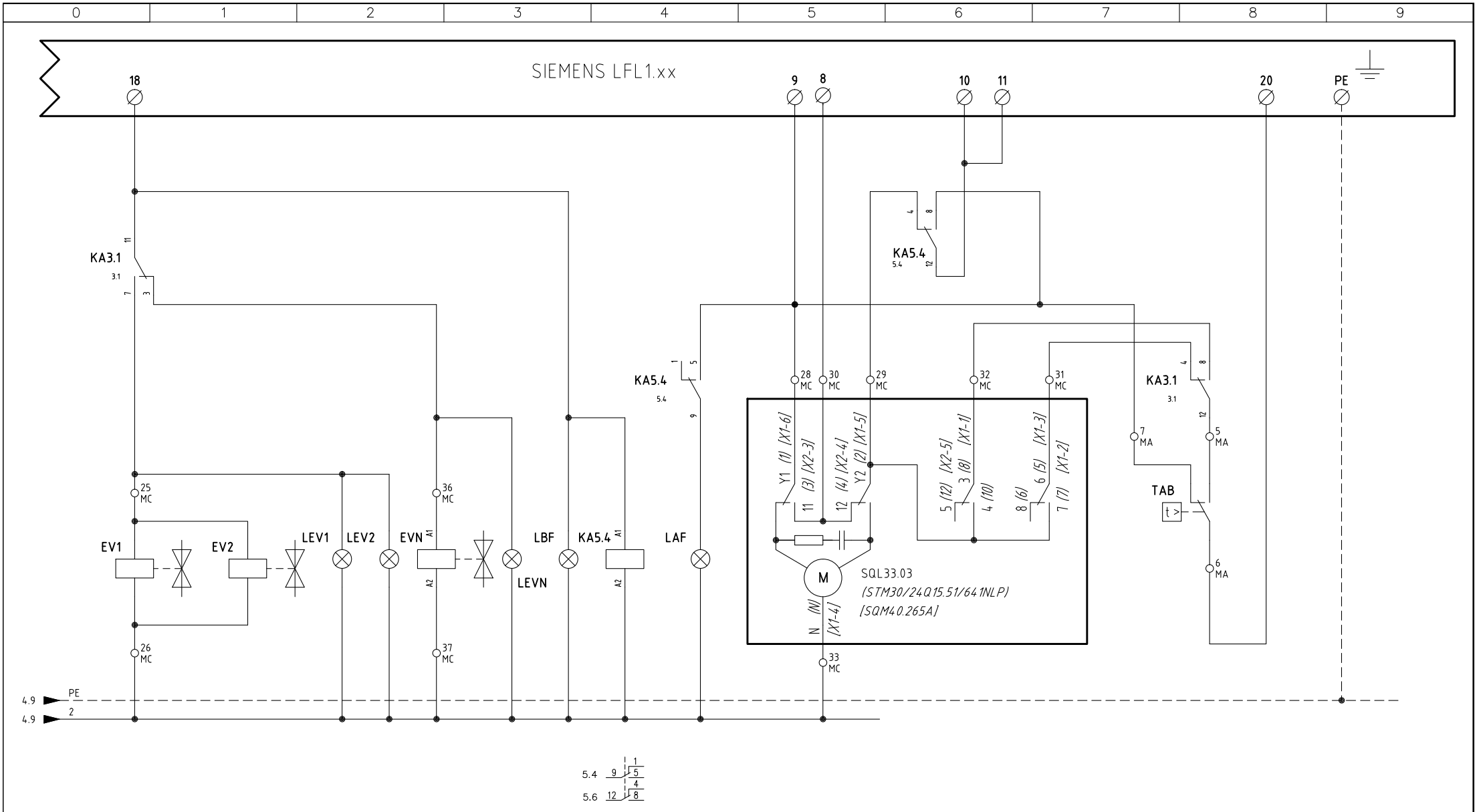

Data	19/11/2012	PREC.	FOGLIO
Revisione	01	4	5
Dis. N.	05 – 972	SEGUE	TOTALE
		6	9

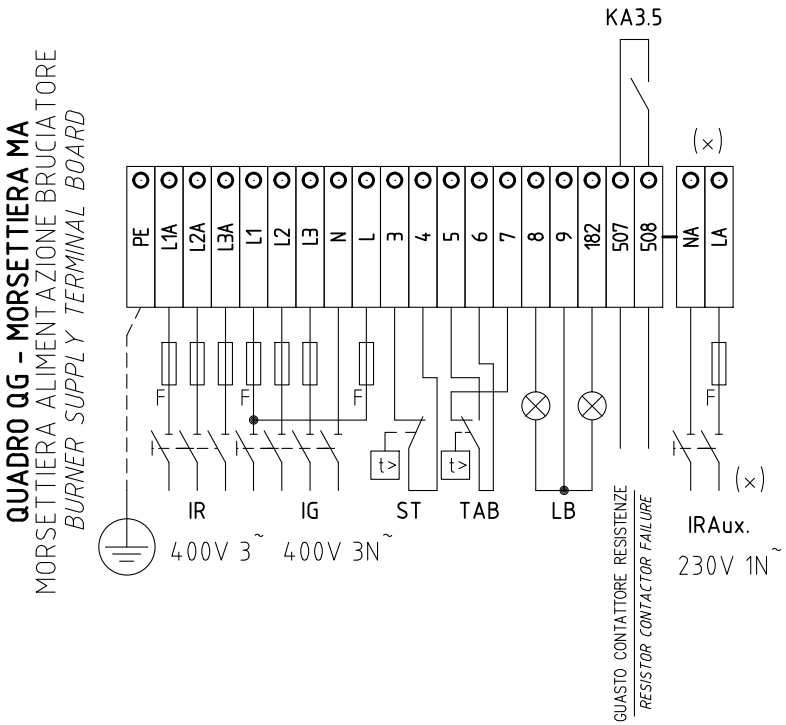

(x)
INSTALLATO SOLO SU ALCUNE VERSIONI
INSTALLED ON ANY VERSIONS ONLY

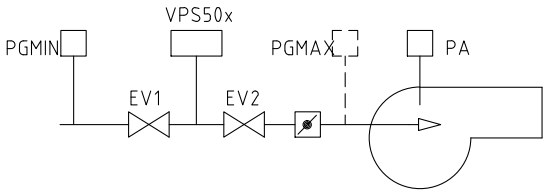

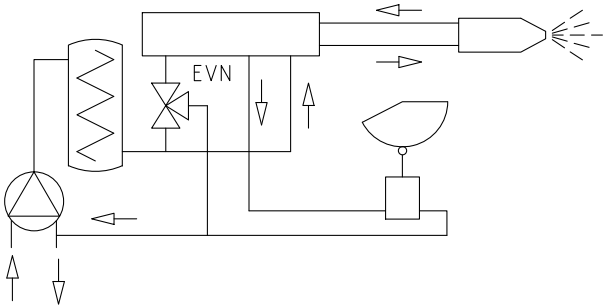

Data 19/11/2012		PREC.	FOGLIO
Revisione 01		5	6
Dis. N. 05 – 972		SEGUE	TOTALE
		7	9

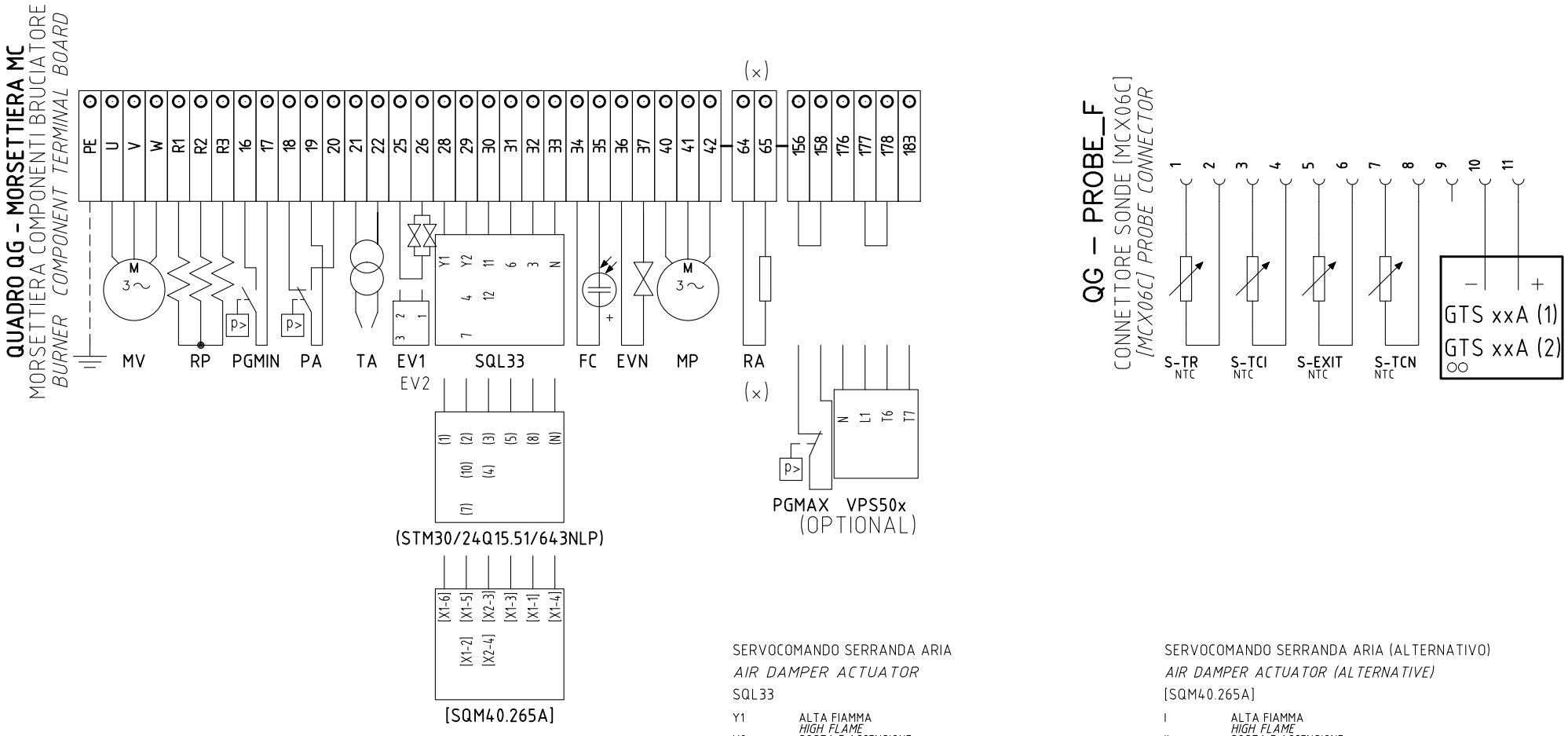

SERVOCOMANDO SERRANDA ARIA
AIR DAMPER ACTUATOR
SQL33

Y1	ALTA FIAMMA *HIGH FLAME*
Y2	SOSTA E ACCENSIONE *STAND-BY AND IGNITION*
3	BASSA FIAMMA GAS *GAS LOW FLAME*
6	BASSA FIAMMA NAFTA *OIL LOW FLAME*

SERVOCOMANDO SERRANDA ARIA (ALTERNATIVO)
AIR DAMPER ACTUATOR (ALTERNATIVE)
[SQM40.265A]

I	ALTA FIAMMA *HIGH FLAME*
II	SOSTA E ACCENSIONE *STAND-BY AND IGNITION*
III	BASSA FIAMMA GAS *GAS LOW FLAME*
IV	BASSA FIAMMA NAFTA *OIL LOW FLAME*

SERVOCOMANDO SERRANDA ARIA (ALTERNATIVO)
AIR DAMPER ACTUATOR (ALTERNATIVE)
(STM30/24Q15.51/641NLP)

I	ALTA FIAMMA *HIGH FLAME*
II	SOSTA E ACCENSIONE *STAND-BY AND IGNITION*
III	BASSA FIAMMA GAS *GAS LOW FLAME*
V	BASSA FIAMMA NAFTA *OIL LOW FLAME*

(x)
INSTALLATO SOLO SU ALCUNE VERSIONI
INSTALLED ON ANY VERSIONS ONLY

Data 19/11/2012	PREC.	FOGLIO
Revisione 01	6	7
Dis. N. 05 – 972	SEGUE	TOTALE
	8	9

	SIGLA/ITEM	FOGLIO/SHEET	DESCRIZIONE	DESCRIPTION
	(STM30/24Q15.51/641NLP)	5	SERVOCOMANDO SERRANDA ARIA (ALTERNATIVO)	AIR DAMPER ACTUATOR (ALTERNATIVE)
	CM	1	COMMUTATORE FUNZIONAMENTO 1)METANO 0)SPENTO 2)BIOGAS	MANUAL OPERATION SWITCH 1)NATURAL GAS 0)OFF 2)BIOGAS
	EV1	5	ELETTROVALVOLA GAS LATO RETE (O GRUPPO VALVOLE)	UPSTREAM GAS SOLENOID VALVE (OR VALVES GROUP)
	EV2	5	ELETTROVALVOLA GAS LATO BRUCIATORE (O GRUPPO VALVOLE)	DOWNSTREAM GAS SOLENOID VALVE (OR VALVES GROUP)
	EVN	5	ELETTROVALVOLA NAFTA	OIL SOLENOID VALVE
	FC	4	SONDA UV RILEVAZIONE FIAMMA	UV FLAME DETECTOR
(x)	FU1.0	1	FUSIBILE LINEA RESISTENZE AUSILIARIE	LINE AUXILIARY HEATERS FUSE
(x)	FU1.1	1	FUSIBILE RESISTENZE AUSILIARIE	AUXILIARY HEATERS FUSE
	FU1.2	1	FUSIBILI DI LINEA	LINE FUSES
	FU1.3	1	FUSIBILI DI LINEA	LINE FUSES
	FU1.4	1	FUSIBILE DI LINEA	LINE FUSE
	FU1.5	1	FUSIBILI LINEA POMPA	PUMP LINE FUSES
	FU2.0	2	FUSIBILE AUSILIARIO	AUXILIARY FUSE
	FU2.1	2	FUSIBILE AUSILIARIO	AUXILIARY FUSE
	GTS xxA (1)	2	TIRISTORE	THYRISTOR
	GTS xxA (2)	2	TIRISTORE	THYRISTOR
	IG	1	INTERRUTTORE GENERALE	MAINS SWITCH
	IR	1	INTERRUTTORE LINEA RESISTENZE PRERISCALDATORE	PRE-HEATING RESISTOR LINE SWITCH
(x)	IRA	1	INTERRUTTORE RESISTENZE AUSILIARIE	AUXILIARY HEATERS SWITCH
(x)	IRAux.	1	INTERRUTTORE RESISTENZE AUSILIARIE	AUXILIARY HEATERS SWITCH
	KA3.1	3	RELE' AUSILIARIO	AUXILIARY RELAY
	KA3.5	3	RELE' AUSILIARIO SEGNALAZIONE GUASTO CONTATTORE RESISTENZE	AUXILIARY RELAY FOR RESISTOR CONTACTOR FAILURE
	KA5.4	5	RELE' AUSILIARIO	AUXILIARY RELAY
	KM3.6	3	CONTATTORE RESISTENZE PRERISCALDATORE [RP]	PRE-HEATING RESISTOR [RP] CONTACTOR
	KM3.8	3	CONTATTORE MOTORE VENTILATORE	FAN MOTOR CONTACTOR
	KM4.2	4	CONTATTORE MOTORE POMPA NAFTA	OIL PUMP MOTOR CONTACTOR
	KTCI	2	RELE' AUSILIARIO	AUXILIARY RELAY
	KTCN	2	RELE' AUSILIARIO	AUXILIARY RELAY
	KTRS	2	RELE' AUSILIARIO	AUXILIARY RELAY
	LAF	5	LAMPADA SEGNALAZIONE ALTA FIAMMA BRUCIATORE	BURNER IN HIGH FLAME INDICATOR LIGHT
	LB	4	LAMPADA SEGNALAZIONE BLOCCO BRUCIATORE	INDICATOR LIGHT FOR BURNER LOCK-OUT
	LBF	5	LAMPADA SEGNALAZIONE BASSA FIAMMA BRUCIATORE	BURNER IN LOW FLAME INDICATOR LIGHT
	LEV1	5	LAMPADA SEGNALAZIONE APERTURA [EV1]	INDICATOR LIGHT FOR OPENING OF ELECTRO-VALVE [EV1]

(x)
INSTALLATO SOLO SU ALCUNE VERSIONI
INSTALLED ON ANY VERSIONS ONLY

	SIGLA/ITEM	FOGLIO/SHEET	DESCRIZIONE	DESCRIPTION
	LEV2	5	LAMPADA SEGNALAZIONE APERTURA [EV2]	INDICATOR LIGHT FOR OPENING OF ELECTRO-VALVE [EV2]
	LEVN	5	LAMPADA SEGNALAZIONE APERTURA [EVN]	INDICATOR LIGHT FOR OPENING OF ELECTRO-VALVE [EVN]
	LFL 1.xx	3	APPARECCHIATURA CONTROLLO FIAMMA	CONTROL BOX
	LPGMIN	4	LAMPADA SEGNALAZIONE PRESENZA GAS IN RETE	INDICATOR LIGHT FOR PRESENCE OF GAS IN THE NETWORK
	LRP	3	LAMPADA SEGNALAZIONE FUNZIONAMENTO PRERISCALDATORE [RP]	INDICATOR LIGHT FOR PRE-HEATING RESISTOR [RP] OPERATION
	LS	4	LAMPADA SEGNALAZIONE SOSTA BRUCIATORE	INDICATOR LIGHT FOR BURNER STAND-BY
	LSPG	4	LAMPADA SEGNALAZIONE BLOCCO CONTROLLO TENUTA VALVOLE	INDICATOR LIGHT FOR LEAKAGE OF VALVES
	LT	3	LAMPADA SEGNALAZIONE BLOCCO TERMICO MOTORE VENTILATORE	INDICATOR LIGHT FOR FAN MOTOR OVERLOAD THERMAL CUTOUT
	LTA	3	LAMPADA SEGNALAZIONE TRASFORMATORE DI ACCENSIONE	IGNITION TRANSFORMER INDICATOR LIGHT
	LTP	3	LAMPADA SEGNALAZIONE BLOCCO TERMICO MOTORE POMPA	INDICATOR LIGHT FOR PUMP MOTOR OVERLOAD THERMAL CUTOUT
	LTRS	3	LAMPADA SEGNALAZIONE BLOCCO TERMOSTATO DI SICUREZZA [TRS]	INDICATOR LIGHT FOR [TRS] SAFETY THERMOSTAT
	MCX06C	2	REGOLATORE TEMPERATURE NAFTA	OIL TEMPERATURE REGULATOR
	MP	1	MOTORE POMPA NAFTA	OIL PUMP MOTOR
	MV	1	MOTORE VENTILATORE	FAN MOTOR
	PA	4	PRESSOSTATO ARIA	AIR PRESSURE SWITCH
	PGMAX	4	PRESSOSTATO GAS DI MASSIMA PRESSIONE (OPTIONAL)	MAXIMUM PRESSURE GAS SWITCH (OPTIONAL)
	PGMIN	4	PRESSOSTATO GAS DI MINIMA PRESSIONE	MINIMUM GAS PRESSURE SWITCH
	PS	3	PULSANTE SBLOCCO FIAMMA	FLAME UNLOCK BUTTON
(x)	RA	1	RESISTENZE AUSILIARIE	AUXILIARY HEATERS
	RP	1	RESISTENZE PRERISCALDATORE NAFTA	PRE-HEATING TANK RESISTORS
	S-EXIT	2	SONDA TEMPERATURA USCITA BARILOTTO	TANK OUTLET OIL TEMPERATURE PROBE
	S-TCI	2	SONDA TEMPERATURA CONSENSO IMPIANTO	PLANT CONSENT TEMPERATURE PROBE
	S-TCN	2	SONDA TEMPERATURA CONSENSO NAFTA	OIL CONSENT TEMPERATURE PROBE
	S-TR	2	SONDA TEMPERATURA RESISTENZE	RESISTOR TEMPERATURE PROBE
	SQL33.03	5	SERVOCOMANDO SERRANDA ARIA	AIR DAMPER ACTUATOR
	ST	4	SERIE TERMOSTATI/PRESSOSTATI	SERIES OF THERMOSTATS OR PRESSURE SWITCHES
	TA	3	TRASFORMATORE DI ACCENSIONE	IGNITION TRANSFORMER
	TAB	5	TERMOSTATO/PRESSOSTATO ALTA-BASSA FIAMMA	HIGH-LOW THERMOSTAT/PRESSURE SWITCHES
	TP	1	TERMICO MOTORE POMPA	PUMP MOTOR THERMAL
	TRAFO	2	TRASFORMATORE AUSILIARIO	AUXILIARY TRANSFORMER
	TV	1	TERMICO MOTORE VENTILATORE	FAN MOTOR THERMAL
	VPS50x	4	CONTROLLO DI TENUTA VALVOLE GAS (OPTIONAL)	GAS PROVING SYSTEM (OPTIONAL)
	[SQM40.265A]	5	SERVOCOMANDO SERRANDA ARIA (ALTERNATIVO)	AIR DAMPER ACTUATOR (ALTERNATIVE)

(x)
INSTALLATO SOLO SU ALCUNE VERSIONI
INSTALLED ON ANY VERSIONS ONLY

Data 19/11/2012		PREC.	FOGLIO
Revisione 01		8	9
Dis. N. 05 – 972		SEGUE	TOTALE
		/	9