HP60 - HP65 - HP72

Gas / light oil dual fuel burners
Double stage

MANUAL OF INSTALLATION - USE - MAINTENANCE

CIB UNIGAS

BURNERS - BRUCIATORI - BRULERS - BRENNER - QUEMADORES - ГОРЕЛКИ

M039339CA Rel. 0.7 01/2024

DANGERS, WARNINGS AND NOTES OF CAUTION

THIS MANUAL IS SUPPLIED AS AN INTEGRAL AND ESSENTIAL PART OF THE PRODUCT AND MUST BE DELIVERED TO THE USER.

INFORMATION INCLUDED IN THIS SECTION ARE DEDICATED BOTH TO THE USER AND TO PERSONNEL FOLLOWING PRODUCT INSTALLATION AND MAINTENANCE.

THE USER WILL FIND FURTHER INFORMATION ABOUT OPERATING AND USE RESTRICTIONS, IN THE SECOND SECTION OF THIS MANUAL. WE HIGHLY RECOMMEND TO READ IT.

CAREFULLY KEEP THIS MANUAL FOR FUTURE REFERENCE.

1) GENERAL INTRODUCTION

- The equipment must be installed in compliance with the regulations in force, following the manufacturer's instructions, by qualified personnel.
- Qualified personnel means those having technical knowledge in the field of components for civil or industrial heating systems, sanitary hot water generation and particularly service centres authorised by the manufacturer.
- Improper installation may cause injury to people and animals, or damage to property, for which the manufacturer cannot be held liable.
- Remove all packaging material and inspect the equipment for integrity.

In case of any doubt, do not use the unit - contact the supplier.

The packaging materials (wooden crate, nails, fastening devices, plastic bags, foamed polystyrene, etc), should not be left within the reach of children, as they may prove harmful.

- Before any cleaning or servicing operation, disconnect the unit from the mains by turning the master switch OFF, and/or through the cut-out devices that are provided.
- Make sure that inlet or exhaust grilles are unobstructed.
- In case of breakdown and/or defective unit operation, disconnect the unit. Make no attempt to repair the unit or take any direct action.

Contact qualified personnel only.

Units shall be repaired exclusively by a servicing centre, duly authorised by the manufacturer, with original spare parts and accessories.

Failure to comply with the above instructions is likely to impair the unit's safety.

To ensure equipment efficiency and proper operation, it is essential that maintenance operations are performed by qualified personnel at regular intervals, following the manufacturer's instructions.

- When a decision is made to discontinue the use of the equipment, those parts likely to constitute sources of danger shall be made harmless.
- In case the equipment is to be sold or transferred to another user, or in case the original user should move and leave the unit behind, make sure that these instructions accompany the equipment at all times so that they can be consulted by the new owner and/or the installer.
- This unit shall be employed exclusively for the use for which it is meant. Any other use shall be considered as improper and, therefore, dangerous.

The manufacturer shall not be held liable, by agreement or otherwise, for damages resulting from improper installation, use and failure to comply with the instructions supplied by the manufacturer.The occurrence of any of the following circustances may cause explosions, polluting unburnt gases (example: carbon monoxide CO), burns, serious harm to people, animals and things:

- Failure to comply with one of the WARNINGS in this chapter
- Incorrect handling, installation, adjustment or maintenance of the burner
- Incorrect use of the burner or incorrect use of its parts or optional supply

2) SPECIAL INSTRUCTIONS FOR BURNERS

- The burner should be installed in a suitable room, with ventilation openings complying with the requirements of the regulations in force, and sufficient for good combustion.
- Only burners designed according to the regulations in force should be used.
- This burner should be employed exclusively for the use for which it was designed.
- Before connecting the burner, make sure that the unit rating is the same as delivery mains (electricity, gas oil, or other fuel).
- Observe caution with hot burner components. These are, usually, near to the flame and the fuel pre-heating system, they become hot during the unit operation and will remain hot for some time after the burner has stopped.

When the decision is made to discontinue the use of the burner, the user shall have qualified personnel carry out the following operations:

a Remove the power supply by disconnecting the power cord from the mains.

b Disconnect the fuel supply by means of the hand-operated shut-off valve and remove the control handwheels from their spindles.

Special warnings

- Make sure that the burner has, on installation, been firmly secured to the appliance, so that the flame is generated inside the appliance fire-box.
- Before the burner is started and, thereafter, at least once a year, have qualified personnel perform the following operations:

a set the burner fuel flow rate depending on the heat input of the appliance;

b set the flow rate of the combustion-supporting air to obtain a combustion efficiency level at least equal to the lower level required by the regulations in force;

c check the unit operation for proper combustion, to avoid any harmful or polluting unburnt gases in excess of the limits permitted by the regulations in force;

d make sure that control and safety devices are operating properly;

e make sure that exhaust ducts intended to discharge the products of combustion are operating properly;

f on completion of setting and adjustment operations, make sure that all mechanical locking devices of controls have been duly tightened;

g make sure that a copy of the burner use and maintenance instructions is available in the boiler room.

- In case of a burner shut-down, reser the control box by means of the RESET pushbutton. If a second shut-down takes place, call the Technical Service, **without trying to RESET further**.
- The unit shall be operated and serviced by qualified personnel only, in compliance with the regulations in force.

3) GENERAL INSTRUCTIONS DEPENDING ON FUEL USED

3a) ELECTRICAL CONNECTION

- For safety reasons the unit must be efficiently earthed and installed as required by current safety regulations.
- It is vital that all saftey requirements are met. In case of any doubt, ask for an accurate inspection of electrics by qualified personnel, since the manufacturer cannot be held liable for damages that may be caused by failure to correctly earth the equipment.
- Qualified personnel must inspect the system to make sure that it is adequate to take the maximum power used by the equipment shown on the equipment rating plate. In particular, make sure that the system cable cross section is adequate for the power absorbed by the unit.
- No adaptors, multiple outlet sockets and/or extension cables are permitted to connect the unit to the electric mains.
- An omnipolar switch shall be provided for connection to mains, as required by the current safety regulations.
- The use of any power-operated component implies observance of a few basic rules, for example:
  - do not touch the unit with wet or damp parts of the body and/or with bare feet;
  - do not pull electric cables;
  - do not leave the equipment exposed to weather (rain, sun, etc.) unless expressly required to do so;
  - do not allow children or inexperienced persons to use equipment;
- The unit input cable shall not be replaced by the user.
  In case of damage to the cable, switch off the unit and contact qualified personnel to replace.
  When the unit is out of use for some time the electric switch supplying all the power-driven components in the system (i.e. pumps, burner, etc.) should be switched off.

3b) FIRING WITH GAS, LIGHT OIL OR OTHER FUELS

GENERAL

- The burner shall be installed by qualified personnel and in compliance with regulations and provisions in force; wrong installation can cause injuries to people and animals, or damage to property, for which the manufacturer cannot be held liable.
- Before installation, it is recommended that all the fuel supply system pipes be carefully cleaned inside, to remove foreign matter that might impair the burner operation.
- Before the burner is commissioned, qualified personnel should inspect the following:

a the fuel supply system, for proper sealing;
b the fuel flow rate, to make sure that it has been set based on the firing rate required of the burner;
c the burner firing system, to make sure that it is supplied for the designed fuel type;
d the fuel supply pressure, to make sure that it is included in the range shown on the rating plate;
e the fuel supply system, to make sure that the system dimensions are adequate to the burner firing rate, and that the system is equipped with all the safety and control devices required by the regulations in force.

- When the burner is to remain idle for some time, the fuel supply tap or taps should be closed.

SPECIAL INSTRUCTIONS FOR USING GAS

Have qualified personnel inspect the installation to ensure that:

a the gas delivery line and train are in compliance with the regulations and provisions in force;
b all gas connections are tight;
c the boiler room ventilation openings are such that they ensure the air supply flow required by the current regulations, and in any case are sufficient for proper combustion.

- Do not use gas pipes to earth electrical equipment.
- Never leave the burner connected when not in use. Always shut the gas valve off.
- In case of prolonged absence of the user, the main gas delivery valve to the burner should be shut off.

Precautions if you can smell gas

a do not operate electric switches, the telephone, or any other item likely to generate sparks;
b immediately open doors and windows to create an air flow to purge the room;
c close the gas valves;
d contact qualified personnel.

- Do not obstruct the ventilation openings of the room where gas appliances are installed, to avoid dangerous conditions such as the development of toxic or explosive mixtures.

DIRECTIVES AND STANDARDS

Gas burners

European directives

-Regulation 2016/426/UE (appliances burning gaseous fuels)
-2014/35/UE (Low Tension Directive)
-2014/30/UE (Electromagnetic compatibility Directive)
-2006/42/EC (Machinery Directive)

Harmonized standards

-UNI EN 676 (Automatic forced draught burners for gaseous fuels)
-EN 55014-1 (Electromagnetic compatibility- Requirements for house hold appliances, electric tools and similar apparatus)
-EN 60204-1:2006 (Safety of machinery – Electrical equipment of machines.)
-CEI EN 60335-1 (Specification for safety of household and similar electrical appliances);
-CEI EN 60335-2-102 (Household and similar electrical appliances. Safety. Particular requirements for gas, oil and solid-fuel burning appliances having electrical connections).
-UNI EN ISO 12100:2010 (Safety of machinery - General principles for design - Risk assessment and risk reduction);

Light oil burners

European directives

-2014/35/UE (Low Tension Directive)
-2014/30/UE (Electromagnetic compatibility Directive)
-2006/42/EC (Machinery Directive)

Harmonized standards

-UNI EN 267-2011(Automatic forced draught burners for liquid fuels)
-EN 55014-1 (Electromagnetic compatibility- Requirements for house hold appliances, electric tools and similar apparatus)
-EN 60204-1:2006 (Safety of machinery – Electrical equipment of machines.)
-CEI EN 60335-1 (Specification for safety of household and similar electrical appliances);
-CEI EN 60335-2-102 (Household and similar electrical appliances. Safety. Particular requirements for gas, oil and solid-fuel burning appliances having electrical connections).
-UNI EN ISO 12100:2010 (Safety of machinery - General principles for design - Risk assessment and risk reduction);

Heavy oil burners

European Directives

-2014/35/UE (Low Tension Directive)
-2014/30/UE (Electromagnetic compatibility Directive)
-2006/42/EC (Machinery Directive)

Harmonized standards

-UNI EN 267(Automatic forced draught burners for liquid fuels)
-EN 55014-1 (Electromagnetic compatibility- Requirements for house hold appliances, electric tools and similar apparatus)
-EN 60204-1:2006 (Safety of machinery – Electrical equipment of machines.)
-CEI EN 60335-1 (Specification for safety of household and similar electrical appliances);
-CEI EN 60335-2-102 (Household and similar electrical appliances. Safety. Particular requirements for gas, oil and solid-fuel burning appliances having electrical connections).
-UNI EN ISO 12100:2010 (Safety of machinery - General principles for design - Risk assessment and risk reduction);

Gas - Light oil burners

European Directives

-Regulation 2016/426/UE (appliances burning gaseous fuels)
-2014/35/UE (Low Tension Directive)
-2014/30/UE (Electromagnetic compatibility Directive)
-2006/42/EC (Machinery Directive)

Harmonized standards

-UNI EN 676 (Automatic forced draught burners for gaseous fuels)
-UNI EN 267(Automatic forced draught burners for liquid fuels)
-EN 55014-1 (Electromagnetic compatibility- Requirements for house hold appliances, electric tools and similar apparatus)
-EN 60204-1:2006 (Safety of machinery – Electrical equipment of machines.)
-CEI EN 60335-1 (Specification for safety of household and similar electrical appliances);
-CEI EN 60335-2-102 (Household and similar electrical appliances. Safety. Particular requirements for gas, oil and solid-fuel burning appliances having electrical connections).
-UNI EN ISO 12100:2010 (Safety of machinery - General principles for design - Risk assessment and risk reduction);

Gas - Heavy oil burners

European directives:

-Regulation 2016/426/UE (appliances burning gaseous fuels)
-2014/35/UE (Low Tension Directive)
-2014/30/UE (Electromagnetic compatibility Directive)
-2006/42/EC (Machinery Directive)

Harmonized standards

-UNI EN 676 (Automatic forced draught burners for gaseous fuels)
-EN 55014-1 (Electromagnetic compatibility- Requirements for house hold appliances, electric tools and similar apparatus)
-EN 60204-1:2006 (Safety of machinery – Electrical equipment of machines.)
-CEI EN 60335-1 (Specification for safety of household and similar electrical appliances);
-CEI EN 60335-2-102 (Household and similar electrical appliances. Safety. Particular requirements for gas, oil and solid-fuel burning appliances having electrical connections).
-UNI EN ISO 12100:2010 (Safety of machinery - General principles for design - Risk assessment and risk reduction);

Industrial burners

European directives

-Regulation 2016/426/UE (appliances burning gaseous fuels)
-2014/35/UE (Low Tension Directive)
-2014/30/UE (Electromagnetic compatibility Directive)
-2006/42/EC (Machinery Directive)

Harmonized standards

-EN 55014-1 (Electromagnetic compatibility- Requirements for house hold appliances, electric tools and similar apparatus)
-EN 746-2 (Industrial thermoprocessing equipment - Part 2: Safety requirements for combustion and fuel handling systems)
-UNI EN ISO 12100:2010 (Safety of machinery - General principles for design - Risk assessment and risk reduction);
-EN 60204-1:2006 (Safety of machinery – Electrical equipment of machines.)
-EN 60335-2 (Electrical equipment of non-electric appliances for household and similar purposes. Safety requirements)

Burner data plate

For the following information, please refer to the data plate:

- burner type and burner model: must be reported in any communication with the supplier
- burner ID (serial number): must be reported in any communication with the supplier
- date of production (year and month)
- information about fuel type and network pressure

Type	--
Model	--
Year	--
S.Number	--
Output	--
Oil Flow	--
Fuel	--
Category	--
Gas Pressure	--
Viscosity	--
El.Supply	--
El.Consump.	--
Fan Motor	--
Protection	--
Drwaing n°	--
P.I.N.	--

SYMBOLS USED

WARNING! Failure to observe the warning may result in irreparable damage to the unit or damage to the environment

DANGER! Failure to observe the warning may result in serious injuries or death.

WARNING! Failure to observe the warning may result in electric shock with lethal consequences

Figures, illustrations and images used in this manual may differ in appearance from the actual product.

BURNER SAFETY

The burners - and the configurations described below - comply with the regulations in force regarding health, safety and the environment. For more in-depth information, refer to the declarations of conformity that are an integral part of this Manual.

DANGER! Incorrect motor rotation can seriously damage property and injure people.

Residual risks deriving from misuse and prohibitions

The burner has been built in order to make its operation safe; there are, however, residual risks.

Do not touch any mechanical moving parts with your hands or any other part of your body. Injury hazard
Do not touch any parts containing fuel (i.e. tank and pipes). Scalding hazard
Do not use the burner in situations other than the ones provided for in the data plate.
Do not use fuels other than the ones stated.
Do not use the burner in potentially explosive environments.
Do not remove or by-pass any machine safety devices.
Do not remove any protection devices or open the burner or any other component while the burner is running.
Do not disconnect any part of the burner or its components while the burner is running.
Untrained staff must not modify any linkages.

After any maintenance, it is important to restore the protection devices before restarting the machine.
All safety devices must be kept in perfect working order.
Personnel authorized to maintain the machine must always be provided with suitable protections.

ATTENTION: while running, the parts of the burner near the generator (coupling flange) are subject to overheating. Where necessary, avoid any contact risks by wearing suitable PPE.

PART I: SPECIFICATIONS

BURNERS FEATURES

This series represents monobloc gas burners made in die-cast aluminium housing, that can burn either gas or light oil, thanks to the adjustable combustion head which allows a good performance with both fuels. They can be provided in progressive or fully-modulating version.

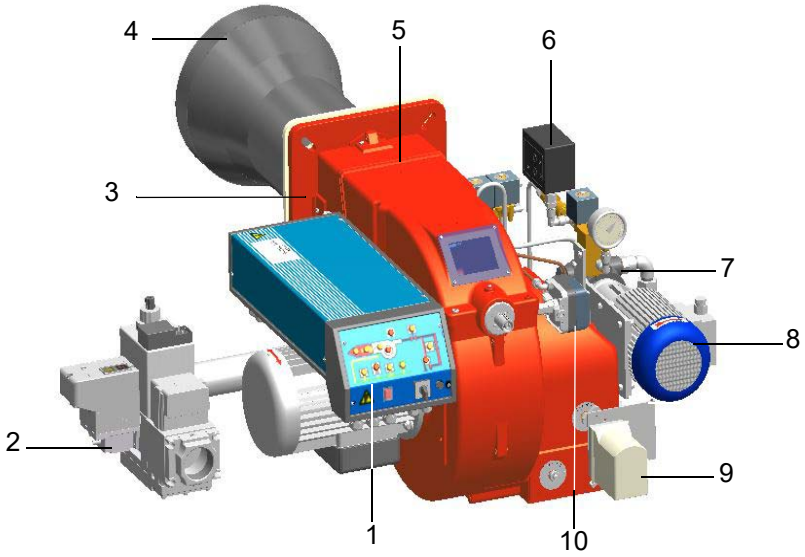

1 Control panel with startup switch
2 Gas valve group
3 Burner flange
4 Blast tube-Combustion head ass.y
5 Cover
6 Oil pressure switch
7 Light oil pump
8 Pump motor
9 Actuator
10 Air pressure switch

Note: the figure is indicative only

Fig. 1

Gas operation: the gas coming from the supply line, passes through the valves group provided with filter and governor. This one forces the pressure in the utilisation limits. The actuators move proportionally the air damper and the gas butterfly valve, in order to achieve the optimisation of the gas flue values, as to get an efficient combustion.

Light oil operation: the fuel coming from the supply line, is pushed by the pump to the nozzle and then into the combustion chamber, where the mixture between fuel and air takes place and consequently the flame.
In the burners, the mixture bertween fuel and air, to perform clean and efficient combustion, is activated by atomisation of oil into very small particles. This process is achieved making pressurised oil passing through the nozzle.
The pump main function is to transfer oil from the tank to the nozzle in the desired quantity and pressure. To adjust this pressure, pumps are provided with a pressure regulator (except for some models for which a separate regulating valve is provided). Other pumps are provided with two pressure regulators: one for the high and one for low pressure (in double-stage systems with one nozzle).

The adjustable combustion head can improve the burner performance. The combustion head determines the energetic quality and the geometry of the flame. Fuel and comburent are routed into separated ways as far as the zone of flame generation (combustion chamber). The control panel, placed on the burner front side, shows each operating stage.

Burner model identification

Burners are identified by burner type and model. Burner model identification is described as follows.

Type	HP60	Model	MG.	AB.	S.	*.	A.	0.	50.
	(1)		(2)	(3)	(4)	(5)	(6)	(7)	(8)

1	BURNER TYPE	**HP60, HP65, HP72**
2	FUEL	MG - Natural gas -Light oil BG - Biogas - -Light oil LG - LPG - -Light oil
3	OPERATION (Available versions)	AB - Double stage
4	BLAST TUBE	S - Standard
5	DESTINATION COUNTRY	* - see data plate
6	BURNER VERSION	A - Standard Y - SpecialeSpecial
7	EQUIPMENT	0 = 2 gas valves 1 = 2 gas valves + gas proving system 7 = 2 gas valves + maximum gas pressure switch 8 = 2 gas valves + gas proving system + maximum gas pressure switch
8	GAS CONNECTION	32 = Rp1”$_{1/4}$ - 40 = Rp1”$_{1/2}$ - 50 = Rp2” - DN65

Fuel

WARNING! The burner must be used only with the fuel specified in the burner data plate .

Type	--
Model	--
Year	--
S.Number	--
Output	--
Oil Flow	--
Fuel	--
Category	--
Gas Pressure	--
Viscosity	--
El.Supply	--
El.Consump.	--

The burner technical specifications, described in this manual, refer to natural gas (calorific net value Hi = 9.45 kWh/Stm^3, density ρ = 0.717 Kg/Stm^3) and LPG (calorific net value Hi = 26.79 kWh/Stm^3, density ρ = 2.151 Kg/Stm^3). For different fuel such as town gas and biogas, multiply the values of flow and pressure by th corrective factors shown in the table below.

Fuel	Hi (KWh/Stm^3)	ρ (kg/Stm^3)	f_Q	f_p
Town gas	4,88	0,6023	1,936	3,3
Biogas	6,395	1,1472	1,478	3,5

For example, to obtain the flow and pressure values for the biogas:

$$Q_{biogas} = Q_{naturalGas} \cdot 1,478$$

$$p_{biogas} = p_{naturalGas} \cdot 3,5$$

ATTENTION! The combustion head type and the settings depend on the fuel. The burner must be used only for its intended purpose specified in the burner data plate .

ATTENTION! The corrective factors in the above table depend on the gas composition, so on the calorifc value and the density of the gas. The above value can be taken only as reference.

Technical Specifications

BURNER TYPE		HP60 MG...0.32	HP60 MG...0.40	HP60 MG...0.50	HP60 MG...0.65
Output	min. - max. kW	170 - 880			
Fuel		Nat. gas - Light oil			
Gas category - Natural gas		(see next paragraph)			
Gas rate- Natural gas	min. - max. (Stm^3/h)	18 - 93			
Gas pressure	min. - max. mbar	(see Note 2)			
Light oil rate	min. - max.kg/h	14 - 74			
Oil viscosity		2 - 7.4 cSt @40°C			
Power supply		230 V 50 Hz 3 a.c. - 380 V / 400 V 50 Hz 3 a.c.			
Auxiliary power consumption		220 V / 230 V 2 a.c. - 220 V / 230 V 1N a.c. 50 Hz			
Total power consumption	kW	2.15			
Fan motor	kW	1.1			
Pump motor	kW	0.55			
Protection		IP40			
Approx. weight	kg	60	65	70	80
Operation		AB - Double stage			
Gas Train		32	40	50	65
Valves size / Gas connection		$1"_{1/4}$ / $Rp1_{1/4}$	$1"_{1/2}$ / $Rp1_{1/2}$	2" / Rp2	$2"_{1/2}$ / DN65
Operating temperature	°C	-10 ÷ +50			
Storage Temperature	°C	-20 ÷ +60			
Working service(*)		Internittent			

BURNER TYPE		HP65 MG...0.32	HP65 MG...0.40	HP65 MG...0.50	HP65 MG...0.65
Output	min. - max. kW	270 - 970			
Fuel		Nat. gas - Light oil			
Gas category - Natural gas		(see next paragraph)			
Gas rate- Natural gas	min. - max. (Stm^3/h)	29 - 103			
Gas pressure	min. - max. mbar	(see Note 2)			
Light oil rate	min.- max.kg/h	23 - 82			
Oil viscosity		2 - 7.4 cSt @40°C			
Oil viscosity		2 - 7.4 cSt @40°C			
Auxiliary power consumption		230 V 50 Hz 3 a.c. - 380 V / 400 V 50 Hz 3 a.c.			
Total power consumption		220 V / 230 V 2 a.c. - 220 V / 230 V 1N a.c. 50 Hz			
Total power consumption	kW	2.55			
Fa motor	kW	1.5			
Pump motor	kW	0.55			
Protection		IP40			
Approx. weight	kg	90	95	105	115
Operation		AB - Double stage			
Gas Train		32	40	50	65
Valves size / Gas connection		$1"_{1/4}$ / $Rp1_{1/4}$	$1"_{1/2}$ / $Rp1_{1/2}$	2" / Rp2	$2"_{1/2}$ / DN65
Operating temperature	°C	-10 ÷ +50			
Storage Temperature	°C	-20 ÷ +60			
Working service(*)		Internittent			

Note 1:	All gas flow rates are referred to Stm^3 / h (1.013 mbar absolute pressure, 15 °C temperature) and are valid for G20 gas (net calorific value H_i = 34,02 MJ / Stm^3); for L.P.G. (net calorific value H_i = 93,5 MJ / Stm^3).	
Note 2:	Maximum gas pressure	360 mbar (with Dungs MBDLE).
		500 mbar (with Siemens VGD or Dungs MultiBloc MBE).
	Minimum gas pressure	see gas curves
Note 3:	Burners are suitable only for indoor operation with a maximum relative humidity of 80 %.	
Note 4:	With electrode: for safety reasons the burner must stop automatically every 24 hours.	
Note 5:	The type of service can be continuous (flame signal presence for more than 24 h without any stop) or intermittent (at least once every 24 h there is a work stoppage and the flame is extinguished) depending on the configuration ordered. Operation can be continuous in the presence of flame detection via ION ionisation or Siemens QRI..., QRA5..., QRA7... or Lamtec FSS... with Siemens LMV37x or LMV5x flame control equipment (BMS) and Lamtec BT3...	

(*) NOTE ON THE WORKING SERVICE: the control box automatically stops after 24h of continuous working. The control box immediately starts up, automatically.

BURNER TYPE		HP72 MG..0.40	HP72 MG..0.50	HP72 MG...0.65	HP72 MG...0.80
Output	min. - max. kW	330 - 1200			
Fuel		Nat. gas - Light oil			
Gas category - Natural gas		(see next paragraph)			
Gas rate- Natural gas	min.- max. (Stm^3/h)	35 - 127			
Gas pressure	min. - max. mbar	(see Note 2)			
Light oil rate	min. - max kg/h	28 - 101			
Oil viscosity		2 - 7.4 cSt @40°C			
Auxiliary power consumption		230 V 50 Hz 3 a.c. - 380 V / 400 V 50 Hz 3 a.c.			
Total power consumption		220 V / 230 V 2 a.c. - 220 V / 230 V 1N a.c. 50 Hz			
Total power consumption	kW	3.25			
Fan motor	kW	2.2			
Pump motor	kW	0.55			
Protection		IP40			
Approx. weight	kg	100	110	120	130
Operation		AB - Double stage			
Gas Train		40	50	65	80
Valves size / Gas connection		1"1/2 / Rp1 1/2	2" / Rp2	2"1/2 / DN65	3" / DN80
Operating temperature	°C	-10 ÷ +50			
Storage Temperature	°C	-20 ÷ +60			
Working service(*)		Internittent			

BURNER TYPE		HP72 MG..1.40	HP72 MG..1.50	HP72 MG...1.65	HP72 MG...1.80
Output	min. - max. kW	330 - 1550			
Fuel		Nat. gas - Light oil			
Gas category - Natural gas		(see next paragraph)			
Gas rate- Natural gas	min.- max. (Stm^3/h)	35 - 164			
Gas pressure	min.- max. mbar	(see Note 2)			
Light oil train inlet pressure	max. bar	2			
Oil viscosity	min.- max. kg/h	28 - 131			
Oil density		2 - 7.4 cSt @40°C			
Oil density		840 kg/m3			
Auxiliary power consumption		230 V 50 Hz 3 a.c. - 380 V / 400 V 50 Hz 3 a.c.			
Total power consumption		220 V / 230 V 2 a.c. - 220 V / 230 V 1N a.c. 50 Hz			
Total power consumption	kW	3.25			
Fan motor	kW	2.2			
Pump motor	kW	0.55			
Protection		IP40			
Approx. weight	kg	100	110	120	130
Operation		AB - Double stage			
Gas Train		40	50	65	80
Valves size / Gas connection		1"1/2 / Rp1 1/2	2" / Rp2	2"1/2 / DN65	3" / DN80
Operating temperature	°C	-10 ÷ +50			
Storage Temperature	°C	-20 ÷ +60			
Working service(*)		Intermittent			

Note 1:	All gas flow rates are referred to Stm^3 / h (1.013 mbar absolute pressure, 15 °C temperature) and are valid for G20 gas (net calorific value H_i = 34,02 MJ / Stm^3); for L.P.G. (net calorific value H_i = 93,5 MJ / Stm^3).	
Note 2:	Maximum gas pressure	360 mbar (with Dungs MBDLE).
		500 mbar (with Siemens VGD or Dungs MultiBloc MBE).
	Minimum gas pressure	see gas curves
Note 3:	Burners are suitable only for indoor operation with a maximum relative humidity of 80 %.	
Note 4:	With electrode: for safety reasons the burner must stop automatically every 24 hours.	
Note 5:	The type of service can be continuous (flame signal presence for more than 24 h without any stop) or intermittent (at least once every 24 h there is a work stoppage and the flame is extinguished) depending on the configuration ordered. Operation can be continuous in the presence of flame detection via ION ionisation or Siemens QRI..., QRA5..., QRA7... or Lamtec FSS... with Siemens LMV37x or LMV5x flame control equipment (BMS) and Lamtec BT3...	

(*) NOTE ON THE WORKING SERVICE: the control box automatically stops after 24h of continuous working. The control box immediately starts up, automatically.

BURNER TYPE		HP60 LG...0.32	HP60 LG...0.40	HP60 LG...0.50	HP60 LG...0.65	HP60 BG...0.32	HP60 BG...0.40	HP60 BG...0.50	HP60 BG...0.65
Output	min. - max. kW	170 - 880				170 - 880			
Fuel		LPG - Light oil				Biogas - Light oil			
Gas category - LPG		$I_{3B/P}$							
Gas rate- LPG / Biogas	min. - max. (Stm^3/h)	6,3 - 33				27 - 138			
Gas pressure	min. - max. mbar	(see Note 2)				(see Note 2)			
Light oil rate	min. - max.kg/h	14 - 74				14 - 74			
Oil viscosity		2 - 7.4 cSt @40°C				2 - 7.4 cSt @40°C			
Power supply		230V 3~ / 400V 3N ~ 50Hz				230V 3~ / 400V 3N ~ 50Hz			
Total power consumption	kW	2.15				2,15			
Fan motor	kW	1.1				1,1			
Pump motor	kW	0.55				0,55			
Protection		IP40				IP40			
Approx. weight	kg	60	65	70	80	60	65	70	80
Operation		AB - Double stage				AB - Double stage			
Gas Train		32	40	50	65	32	40	50	65
Valves size / Gas connection		1"1/4 / Rp1 1/4	1"1/2 / Rp1 1/2	2" / Rp2	2"1/2 / DN65	1"1/4 / Rp1 1/4	1"1/2 / Rp1 1/2	2" / Rp2	2"1/2 / DN65
Operating temperature	°C	-10 ÷ +50				-10 ÷ +50			
Storage Temperature	°C	-20 ÷ +60				-20 ÷ +60			
Working service(*)		Internittent				Internittent			

BURNER TYPE		HP65 LG...0.32	HP65 LG...0.40	HP65 LG...0.50	HP65 LG...0.65	HP65 BG...0.32	HP65 BG...0.40	HP65 BG...0.50	HP65 BG...0.65
Output	min. - max. kW	270 - 970				270 - 970			
Fuel		LPG - Light oil				Biogas - Light oil			
Gas category - LPG		$I_{3B/P}$				(see next paragraph)			
Gas rate- LPG / Biogas	min. - max. (Stm^3/h)	10,1 - 36				42 - 152			
Gas pressure	min. - max. mbar	(see Note 2)				(see Note 2)			
Light oil rate	min.- max.kg/h	23 - 82				23 - 82			
Oil viscosity		2 - 7.4 cSt @40°C				2 - 7.4 cSt @40°C			
Power supply		230V 3~ / 400V 3N ~ 50Hz				230V 3~ / 400V 3N ~ 50Hz			
Total power consumption	kW	2,55				2.55			
Fa motor	kW	1,5				1.5			
Pump motor	kW	0,55				0.55			
Protection		IP40				IP40			
Approx. weight	kg	90	95	105	115	90	95	105	115
Operation		AB - Double stage				AB - Double stage			
Gas Train		32	40	50	65	32	40	50	65
Valves size / Gas connection		1"1/4 / Rp1 1/4	1"1/2 / Rp1 1/2	2" / Rp2	2"1/2 / DN65	1"1/4 / Rp1 1/4	1"1/2 / Rp1 1/2	2" / Rp2	2"1/2 / DN65
Operating temperature	°C	-10 ÷ +50				-10 ÷ +50			
Storage Temperature	°C	-20 ÷ +60				-20 ÷ +60			
Working service(*)		Internittent				Internittent			

Note 1:	All gas flow rates are referred to Stm^3 / h (1.013 mbar absolute pressure, 15 °C temperature) and are valid for G20 gas (net calorific value H_i = 34,02 MJ / Stm^3); for L.P.G. (net calorific value H_i = 93,5 MJ / Stm^3).	
Note 2:	Maximum gas pressure	360 mbar (with Dungs MBDLE).
		500 mbar (with Siemens VGD or Dungs MultiBloc MBE).
	Minimum gas pressure	see gas curves
Note 3:	Burners are suitable only for indoor operation with a maximum relative humidity of 80 %.	
Note 4:	With electrode: for safety reasons the burner must stop automatically every 24 hours.	
Note 5:	The type of service can be continuous (flame signal presence for more than 24 h without any stop) or intermittent (at least once every 24 h there is a work stoppage and the flame is extinguished) depending on the configuration ordered. Operation can be continuous in the presence of flame detection via ION ionisation or Siemens QRI..., QRA5..., QRA7... or Lamtec FSS... with Siemens LMV37x or LMV5x flame control equipment (BMS) and Lamtec BT3...	

(*) NOTE ON THE WORKING SERVICE: the control box automatically stops after 24h of continuous working. The control box immediately starts up, automatically.

BURNER TYPE		HP72 LG...0.40	HP72 LG...0.50	HP72 LG...0.65	HP72 LG...0.80	HP72 BG...0.40	HP72 BG...0.50	HP72 BG...0.65	HP72 BG...0.80
Output	min. - max. kW	330 - 1200				330 - 1200			
Fuel		LPG - Light oil				Biogas - Light oil			
Gas category - LPG		$I_{3B/P}$				(see next paragraph)			
Gas rate- LPG / Biogas	min.- max. (Stm^3/h)	12,3 - 45				52 - 188			
Gas pressure	min. - max. mbar	(see Note 2)				(see Note 2)			
Light oil rate	min. - max kg/h	28 - 101				28 - 101			
Oil viscosity		2 - 7.4 cSt @40°C				2 - 7.4 cSt @40°C			
Power supply		230V 3~ / 400V 3N ~ 50Hz				230V 3~ / 400V 3N ~ 50Hz			
Total power consumption	kW	3,25				3,25			
Fan motor	kW	2,2				2,2			
Pump motor	kW	0,55				0,55			
Protection		IP40				IP40			
Approx. weight	kg	100	110	120	130	100	110	120	130
Operation		AB - Double stage				AB - Double stage			
Gas Train		40	50	65	80	40	50	65	80
Valves size / Gas connection		1"1/2 / Rp1 1/2	2" / Rp2	2"1/2 / DN65	3" / DN80	1"1/2 / Rp1 1/2	2" / Rp2	2"1/2 / DN65	3" / DN80
Operating temperature	°C	-10 ÷ +50				-10 ÷ +50			
Storage Temperature	°C	-20 ÷ +60				-20 ÷ +60			
Working service(*)		Internittent				Internittent			

BURNER TYPE		HP72 LG...1.40	HP72 LG...1.65	HP72 LG...1.65	HP72 LG...1.80	HP72 BG...1.40	HP72 BG...1.65	HP72 BG...1.65	HP72 BG...1.80
Output	min. - max. kW	330 - 1550				330 - 1550			
Fuel		LPG - Light oil				Biogas - Light oil			
Gas category - LPG		$I_{3B/P}$				(see next paragraph)			
Gas rate- LPG / Biogas	min.- max. (Stm^3/h)	12,3 - 58				52 - 242			
Gas pressure	min.- max. mbar	(see Note 2)				(see Note 2)			
Light oil train inlet pressure	max. bar	2				2			
Oil viscosity	min.- max. kg/h	28 - 131				28 - 131			
Oil density		2 - 7.4 cSt @40°C				2 - 7.4 cSt @40°C			
Oil density		840 kg/m3				840 kg/m3			
Power supply		230V 3~ / 400V 3N ~ 50Hz				230V 3~ / 400V 3N ~ 50Hz			
Total power consumption	kW	3.25				3.25			
Fan motor	kW	2.2				2.2			
Pump motor	kW	0.55				0.55			
Protection		IP40				IP40			
Approx. weight	kg	100	110	120	130	100	110	120	130
Operation		AB - Double stage				AB - Double stage			
Gas Train		40	50	65	80	40	50	65	80
Valves size / Gas connection		1"1/2 / Rp1 1/2	2" / Rp2	2"1/2 / DN65	3" / DN80	1"1/2 / Rp1 1/2	2" / Rp2	2"1/2 / DN65	3" / DN80
Operating temperature	°C	-10 ÷ +50				-10 ÷ +50			
Storage Temperature	°C	-20 ÷ +60				-20 ÷ +60			
Working service(*)		Intermittent				Intermittent			

Note 1:	All gas flow rates are referred to Stm^3 / h (1.013 mbar absolute pressure, 15 °C temperature) and are valid for G20 gas (net calorific value H_i = 34,02 MJ / Stm^3); for L.P.G. (net calorific value H_i = 93,5 MJ / Stm^3).	
Note 2:	Maximum gas pressure	360 mbar (with Dungs MBDLE).
		500 mbar (with Siemens VGD or Dungs MultiBloc MBE).
	Minimum gas pressure	see gas curves
Note 3:	Burners are suitable only for indoor operation with a maximum relative humidity of 80 %.	
Note 4:	With electrode: for safety reasons the burner must stop automatically every 24 hours.	
Note 5:	The type of service can be continuous (flame signal presence for more than 24 h without any stop) or intermittent (at least once every 24 h there is a work stoppage and the flame is extinguished) depending on the configuration ordered. Operation can be continuous in the presence of flame detection via ION ionisation or Siemens QRI..., QRA5..., QRA7... or Lamtec FSS... with Siemens LMV37x or LMV5x flame control equipment (BMS) and Lamtec BT3...	

(*) NOTE ON THE WORKING SERVICE: the control box automatically stops after 24h of continuous working. The control box immediately starts up, automatically.

Gas categories and countries of application

GAS CATEGORY	COUNTRY
I_{2H}	AT, ES, GR, SE, FI, IE, HU, IS, NO, CZ, DK, GB, IT, PT, CY, EE, LV, SI, MT, SK, BG, LT, RO, TR, CH
I_{2E}	LU, PL
$I_{2E(R)B}$	BE
I_{2EK}	NL
I_{2ELL}	DE
I_{2Er}	FR

Fuel

DANGER! The burner must be used only with the fuel specified in the burner data plate.

Type	--
Model	--
Year	--
S.Number	--
Output	--
Oil Flow	--
Fuel	--
Category	--
Gas Pressure	--
Viscosity	--
El.Supply	--
El.Consump.	--

Overall dimensions (mm)

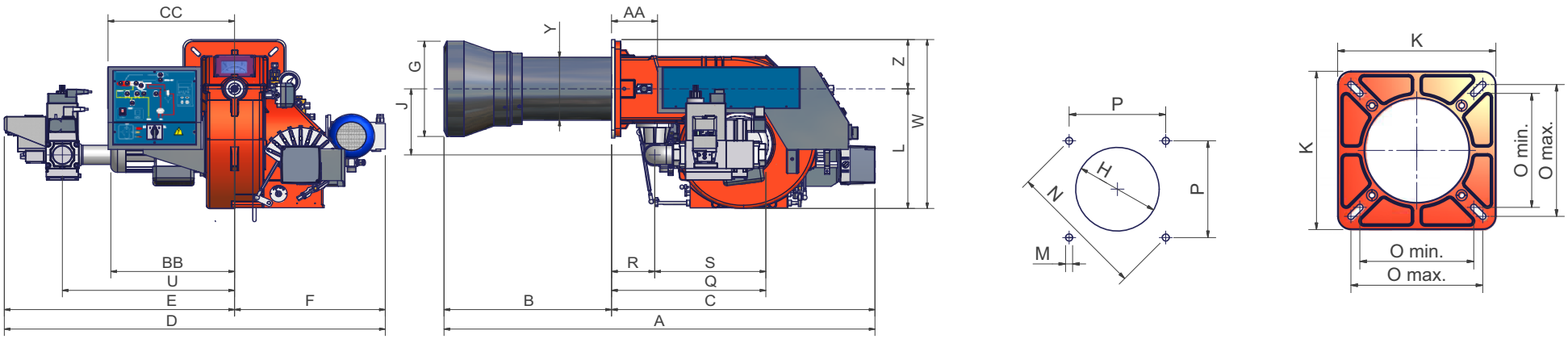

	DN	AS	AA	BS	BB	C	CC	D	E	F	G	H	J	K	L	M	N	O - min	O - max	P	Q	R	S	U	V	W	Y	Z
HP60 AB - 0.32	32	1115	99	383	314	736	362	930	500	430	240	280	210	240	344	M10	269	190	190	190	374	112	256	444	x	464	162	120
HP60 AB - 0.40	40	1115	99	383	314	736	362	930	500	430	240	280	210	240	344	M10	269	190	190	190	445	112	327	444	x	464	162	120
HP60 AB - 0.50	50	1115	99	383	314	736	362	930	500	430	240	280	210	240	344	M10	269	190	190	190	445	112	335	444	x	464	162	120
HP60 AB - 0.65	65	1115	99	383	314	736	362	1115	685	430	240	280	250	240	420	M10	269	190	190	190	845	112	403	540	313	540	162	120
HP65 AB - 0.32	32	1156	139	362	347	794	382	1042	588	454	240	280	208	300	376	M10	330	216	250	233	386	130	256	539	x	531	198	155
HP65 AB - 1.32	32	1156	139	362	347	794	382	1042	588	454	240	280	208	300	376	M10	330	216	250	233	386	130	256	539	x	531	198	155
HP65 AB - 0.40	40	1156	139	362	347	794	382	1022	584	454	240	280	208	300	376	M10	330	216	250	233	457	130	327	535	x	531	198	155
HP65 AB - 1.40	40	1156	139	362	347	794	382	1148	710	454	240	280	208	300	376	M10	330	216	250	233	457	130	327	535	x	531	198	155
HP65 AB - 0.50	50	1156	139	362	347	794	382	1022	568	454	240	280	208	300	376	M10	330	216	250	233	465	130	335	519	x	531	198	155
HP65 AB - 1.50	50	1156	139	362	347	794	382	1148	694	454	240	280	208	300	376	M10	330	216	250	233	465	130	335	519	x	531	198	155
HP65 AB - 0.65	65	1156	139	362	347	794	382	1120	568	454	240	280	208	300	376	M10	330	216	250	233	533	130	403	565	313	548	198	155
HP65 AB - 1.65	65	1156	139	362	347	794	382	1226	666	454	240	280	208	300	376	M10	330	216	250	233	533	130	403	565	313	548	198	155
HP72 AB - 0.40	40	1353	139	505	373	794	382	1022	584	454	300	340	208	300	376	M10	330	216	250	233	457	130	327	535	x	531	198	155
HP72 AB - 1.40	40	1353	139	505	373	794	382	1148	710	454	300	340	208	300	376	M10	330	216	250	233	457	130	327	535	x	531	198	155
HP72 AB - 0.50	50	1353	139	505	373	794	382	1022	772	454	300	340	208	300	376	M10	330	216	250	233	465	130	335	519	x	531	198	155
HP72 AB - 1.50	50	1353	139	505	373	794	382	1148	694	454	300	340	208	300	376	M10	330	216	250	233	465	130	335	519	x	531	198	155
HP72 AB - 0.65	65	1353	139	505	373	794	382	1120	666	454	300	340	273	300	393	M10	330	216	250	233	533	130	403	565	313	548	198	155
HP72 AB - 1.65	65	1353	139	505	373	794	382	1226	772	454	300	340	273	300	393	M10	330	216	250	233	533	130	403	565	313	548	198	155
HP72 AB - 0.80	80	1353	139	505	373	794	382	1120	666	454	300	340	273	300	407	M10	330	216	250	233	574	130	444	565	344	562	198	155
HP72 AB - 1.80	80	1353	139	505	373	794	382	1228	774	454	300	340	273	300	407	M10	330	216	250	233	574	130	444	565	344	562	198	155

*DN = gas valves size

Fig. 3 - 3I2MG25 **Hydraulic diagram**

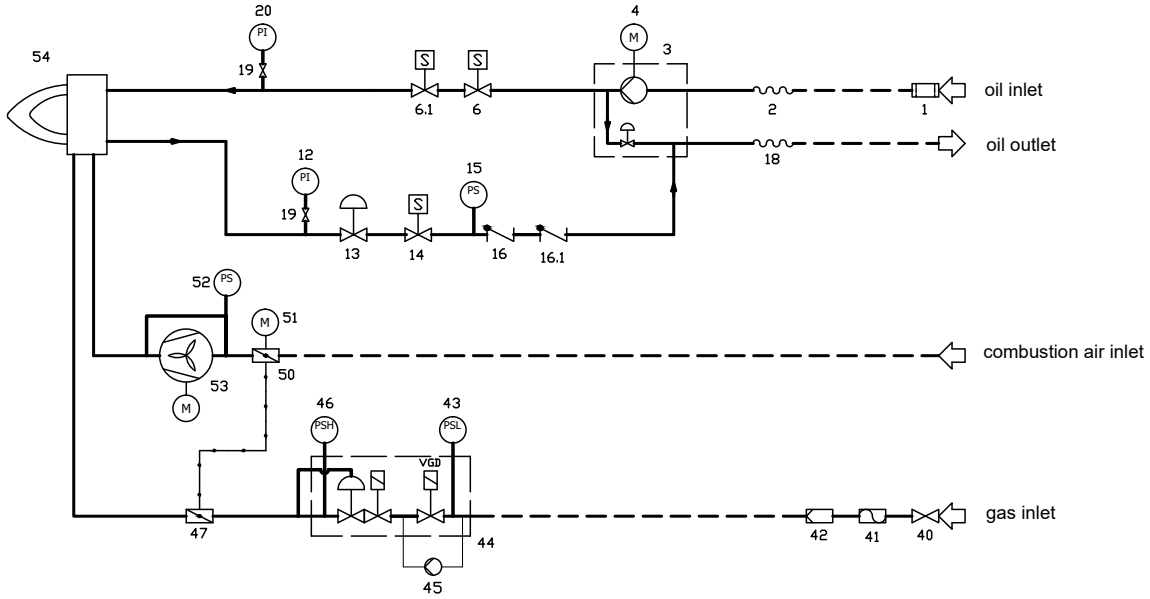

BY OTHERS

BY BURNER CONSTRUCTOR

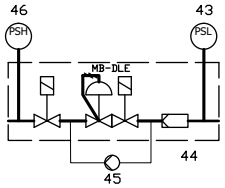

.According to the gas train size and the burner type MB-DLE safety valves are supplied.
In this case, the item 42 is integrated in the valves..See the drawing on the left.

POS	OIL TRAIN
1	Filter
2	Flexible hose
3	Pump and pressure governor
4	Electrical motor
6	Solenoid valve
6.1	Solenoid valve
12	Pressure gauge
13	Pressure governor
14	Solenoid valve
15	Pressure switch
16	One-way valve
16.1	One-way valve
18	Flexible hose
19	Manual valve
20	Pressure gauge
	MAIN GAS TRAIN
40	Manual valve
41	Bellows unit
42	Filter
43	Pressure switch - PGMIN
44	Safety valve with built in gas governor
45	Gas proving system
46	Pressure switch - PGMAX
47	Butterfly valve
	COMBUSTION AIR TRAIN
50	Air damper
51	Actuator
52	Pressure switch - PA
53	Draught fan with electromotor
54	Burner

NOTE The following POS are optional

19, 20, 40, 41, 46

How to read the burner "Performance curve"

To check if the burner is suitable for the boiler to which it must be installed, the following parameters are needed:

- furnace input, in kW or kcal/h (kW = kcal/h / 860);
- backpressure (data are available on the boiler ID plate or in the user's manual).

Example:

Furnace input: 600kW

Backpressure: 4mbar

In the "Performance curve" diagram, draw a vertical line matching the furnace input value and an horizontal line matching the backpressure value. The burner is suitable if the intersection point A is inside the performance curve.

Data are referred to standard conditions: atmospheric pressure at 1013mbar, ambient temperature at 15°C.

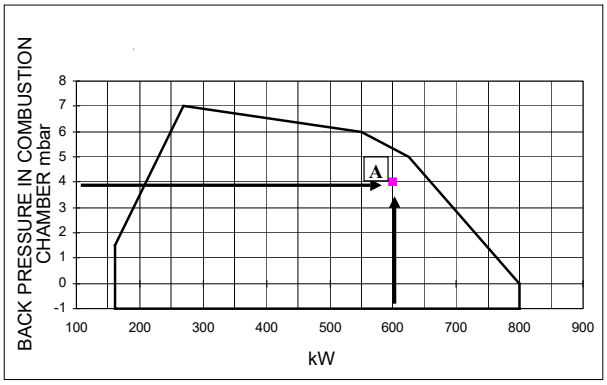

Performance Curves

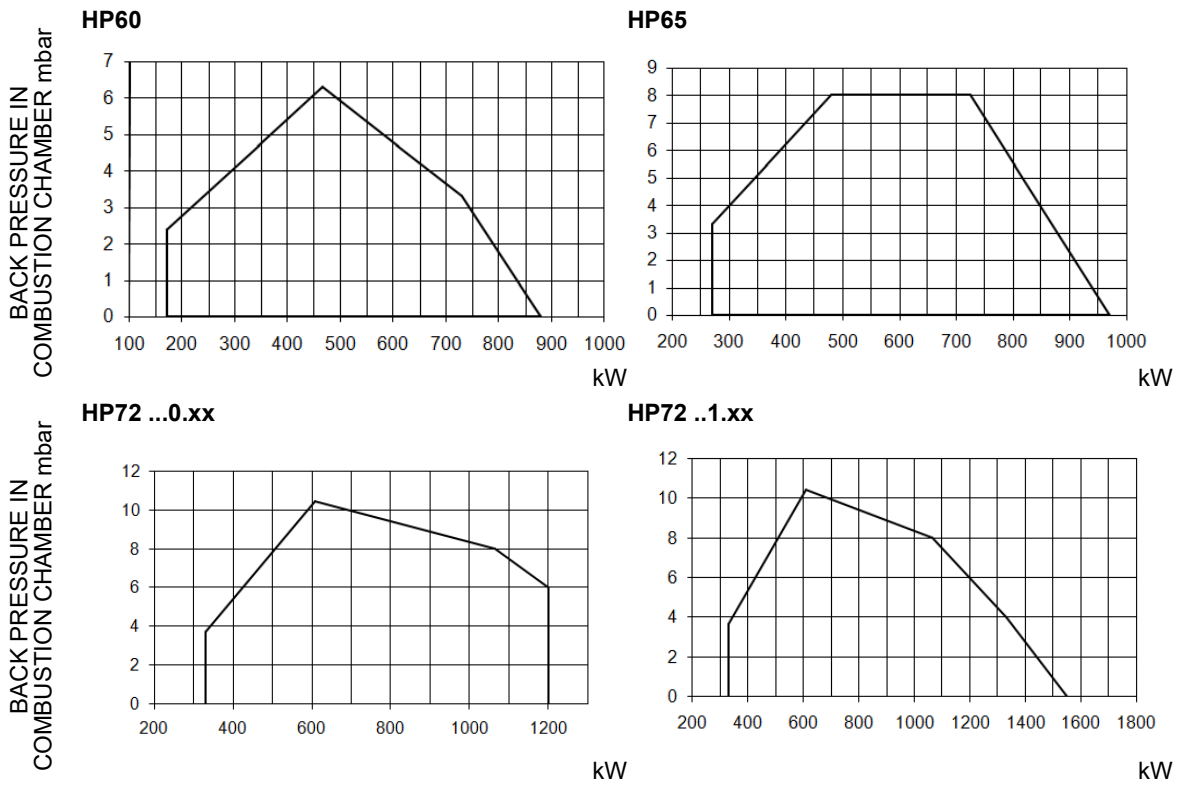

To get the input in kcal/h, multiply value in kW by 860.

Data are referred to standard conditions: atmospheric pressure at 1013mbar, ambient temperature at 15°C

NOTE: The performance curve is a diagram that represents the burner performance in the type approval phase or in the laboratory tests, but does not represent the regulation range of the machine. On this diagram the maximum output point is usually reached by adjsuting the combustion head to its “MAX” position (see paragraph “Adjusting the combustion head”); the minimum output point is reached setting the combustion head to its “MIN” position. During the first ignition, the combustion head is set in order to find a compromise between the burner output and the generator specifications, that is why the minimum output may be different from the Performance curve minimum.

Checking the proper gas train size

To check the proper gas train size, it is necessary to the available gas pressure value upstream the burner's gas valve. Then subtract the backpressure. The result is called **pgas.** Draw a vertical line matching the furnace input value (600kW, in the example), quoted on the x-axis, as far as intercepitng the network pressure curve, according to the installed gas train (DN65, in the example). From the interception point, draw an horizontal line as far as matching, on the y-axis, the value of pressure necessary to get the requested furnace input. This value must be lower or equal to the **pgas** value, calculated before.

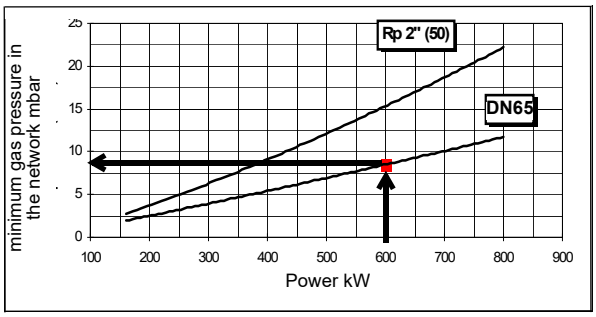

Pressure in the Network / gas flow rate curves (natural gas)

HP60

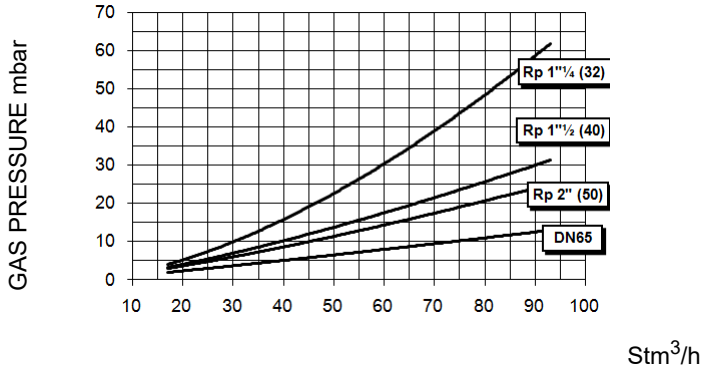

HP65

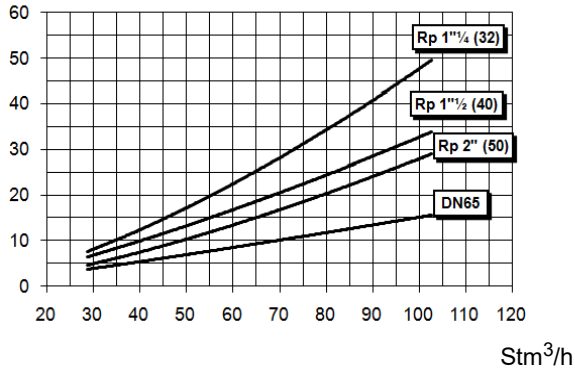

HP72 ...0.xx

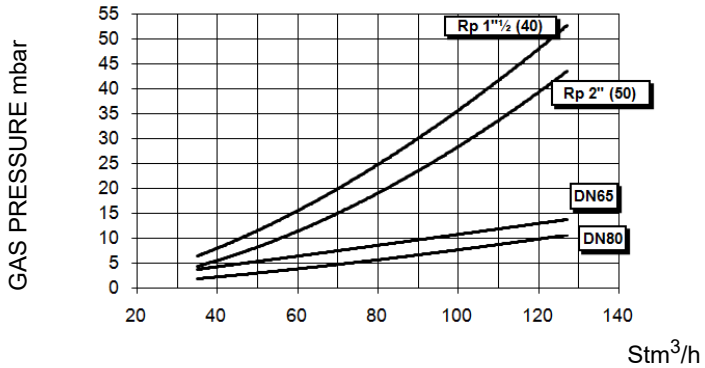

HP72 ...1.xx

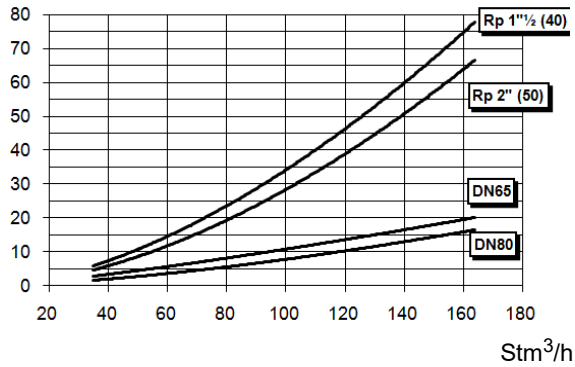

Caution: the gas rate value is quoted on the x-axis, the related network pressure is quoted on the y-axis (pressure value in the combustion chamber is not included). To know the minimum pressure at the gas train inlet, necessary to get the requested gas rate, add the pressure value in the combustion chamber to the value read on the y-axis.

Combustion head gas pressure curves depending on the flow rate

The curves referred to the gas pressure in the combustion head, depending on the gas flow rate, are referred to the burner properly adjusted (percentage of residual O_2 in the flues as shown in the "Recommended combustion values" table and CO in the standard limits). During this stage, the combustion head, the gas butterfly valve and the actuator are at the maximum opening. Refer to Fig. 4, showing the correct way to measure the gas pressure, considering the values of pressure in combustion chamber, surveyed by means of the pressure gauge or taken from the boiler's Technical specifications.

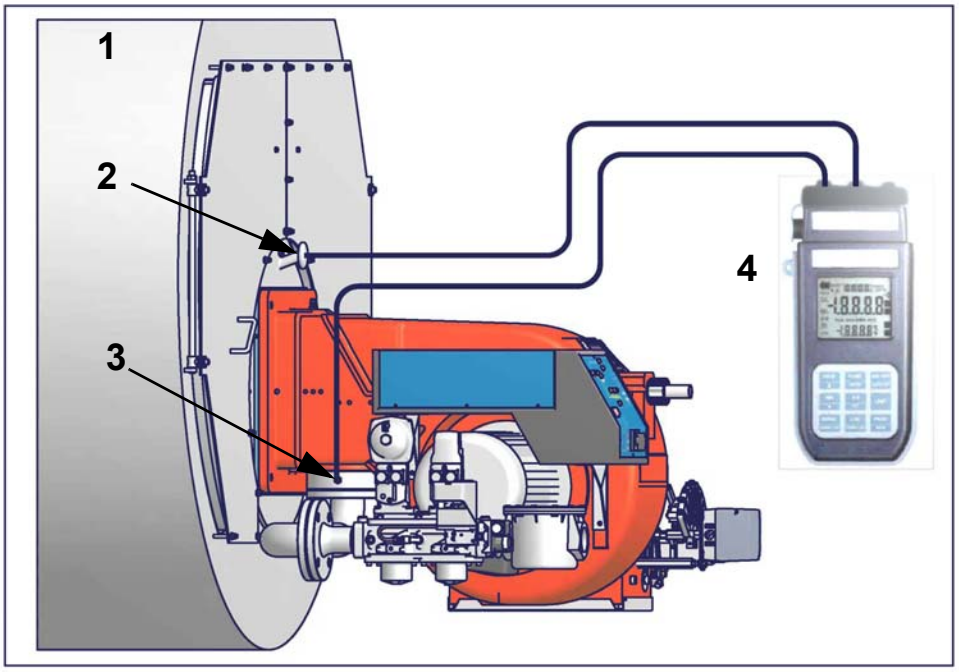

Fig. 4

Note: the figure is indicative only.

Key

1 Generator
2 Pressure outlet on the combustion chamber
3 Gas pressure outlet on the butterfly valve
4 Differential pressure gauge

Measuring the gas pressure in the combustion head

In order to measure the pressure in the combustion head, insert the pressure gauge probes: one into the combustion chamber's pressure outlet to get the pressure in the combustion chamber and the other one into the butterfly valve's pressure outlet of the burner. On the basis of the measured differential pressure, it is possible to get the maximum flow rate: in the pressure - rate curves (showed on the next paragraph), it is easy to find out the burner's output in Stm^3/h (quoted on the x axis) from the pressure measured in the combustion head (quoted on the y axis). The data obtained must be considered when adjusting the gas flow rate.

ATTENTION: THE BURNED GAS RATE MUST BE READ AT THE GAS FLOW METER. WHEN IT IS NOT POSSIBLE, THE USER CAN REFERS TO THE PRESSURE-RATE CURVES AS GENERAL INFORMATION ONLY.

Pressure - rate in combustion head curves (natural gas)

Curves are referred to pressure = 0 mbar in the combustion chamber!

HP60

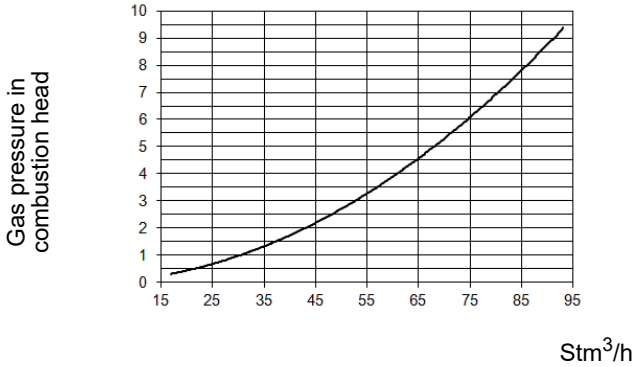

HP65

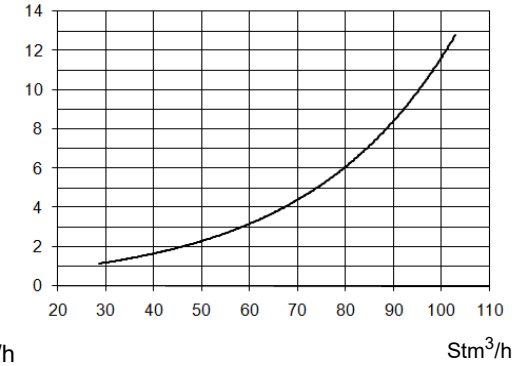

HP72

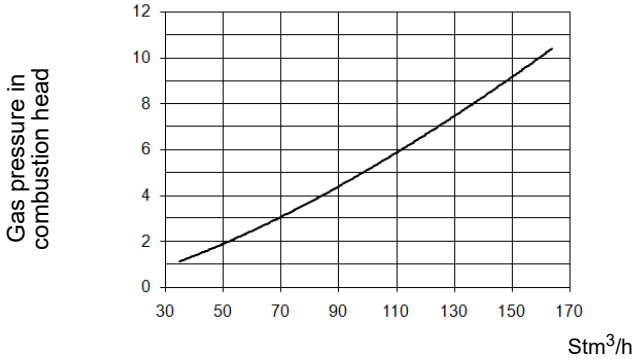

PART II: INSTALLATION

MOUNTING AND CONNECTING THE BURNER

Transport and storage

ATTENTION! The equipment must be installed in compliance with the regulations in force, following the manufacturer's instructions, by qualified personnel. All handling operations must be carried out with appropriate resources and qualified personnel

ATTENTION: Use intact and correctly dimensioned hoisting equipment, conforms to the local regulations and health and safety regulations. Do not stand under lifted loads.

If the product must be stored, avoid humid and corrosive places. Observe the temperatures stated in the burner data table at the beginning of this manual.

Packing

The burners are despatched in wooden crates whose dimensions are:

- **1280mm x 850mm x 760mm**

Packing cases of this type are affected by humidity and are not suitable for stacking.

The following are placed in each packing case:

- burner with detached gas train;
- gasket or ceramic fibre plait (according to burner type) to be inserted between the burner and the boiler;
- envelope containing this manual and other documents.
- oil flexible hoses;

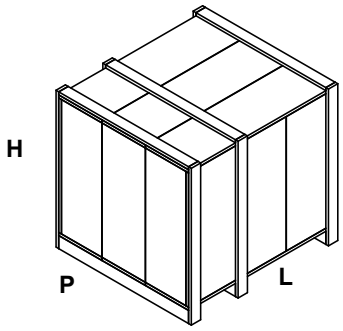

To get rid of the burner's packing, follow the procedures laid down by current laws on disposal of materials.

Handling the burner

WARNING! The handling operations must be carried out by specialised and trained personnel. If these operations are not carried out correctly, the residual risk for the burner to overturn and fall down still persists.

To move the burner, use means suitable to support its weight (see paragraph "Technical specifications").

Fitting the burner to the boiler

To install the burner into the boiler, proceed as follows:

1 make a hole on the closing door of the combustion chamber as described on paragraph "Overall dimensions")
2 place the burner to the boiler: lift it up and handle it according to the procedure described on paragraph "Handling the burner";
3 place the 4 stud bolts (5) on boiler's door, according to the burner drilling template described on paragraph "Overall dimensions";
4 fasten the 4 stud bolts;
5 place the gasket on the burner flange;
6 install the burner into the boiler;
7 fix the burner to the stud bolts, by means of the fixing nuts, according to the next picture.
8 After fitting the burner to the boiler, ensure that the gap between the blast tube and the refractory lining is sealed with appropriate insulating material (ceramic fibre cord or refractory cement).

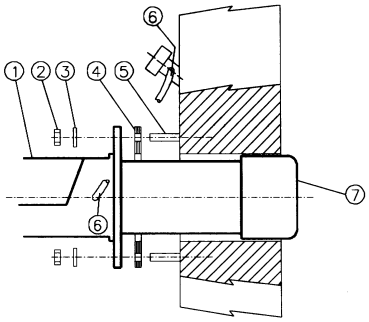

Keys

1 Burner
2 Fixing nut
3 Washer
4 Sealing gasket
5 Stud bolt
7 Blast tube

The burner is designed to work positioned according to the picture below. For different installations, please contact the Technical Department.

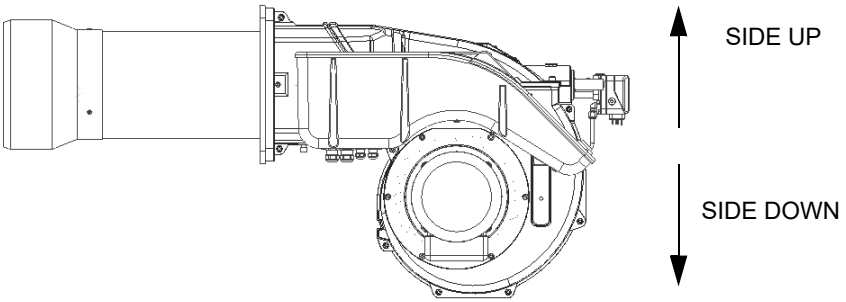

Note: the figure is indicative only.

Matching the burner to the boiler

The burners described in this manual have been tested with combustion chambers that comply with EN676 regulation and whose dimensions are described in the diagram . In case the burner must be coupled with boilers with a combustion chamber smaller in diameter or shorter than those described in the diagram, please contact the supplier, to verify that a correct matching is possible, with respect of the application involved. To correctly match the burner to the boiler verify the type of the blast tube . Verify the necessary input and the pressure in combustion chamber are included in the burner performance curve; otherwise the choice of the burner must be revised consulting the burner manufacturer. To choose the blast tube lenght follow the instructions of the boiler manufacturer. In absence of these consider the following:

- Cast-iron boilers, three pass flue boilers (with the first pass in the rear part): the blast tube must protrude no more than **Dist** = 100 mm into the combustion chamber. (please see the picture below)
- Pressurised boilers with flame reversal: in this case the blast tube must penetrate **Dm** 50 ÷ 100 mm into combustion chamber in respect to the tube bundle plate.(please see the picture below)

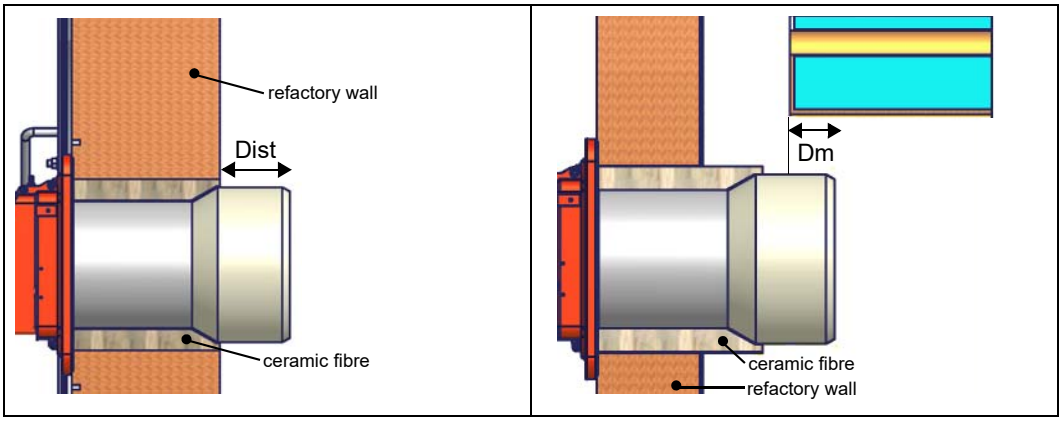

ATTENTION! Carefully seal the free space between blast tube and the refractory lining with ceramic fibre rope or other suitable means.

The length of the blast tubes does not always allow this requirement to be met, and thus it may be necessary to use a suitably-sized spacer to move the burner backwards or to design a blast tube tha suites the utilisation (please, contact the manifacturer).

GAS TRAIN CONNECTIONS

Referring to the P&ID of the burner, execute the connection.

WARNING: BEFORE EXECUTING THE CONNECTIONS TO THE GAS PIPE NETWORK, BE SURE THAT THE MANUAL CUTOFF VALVES ARE CLOSED.

Assembling the gas train

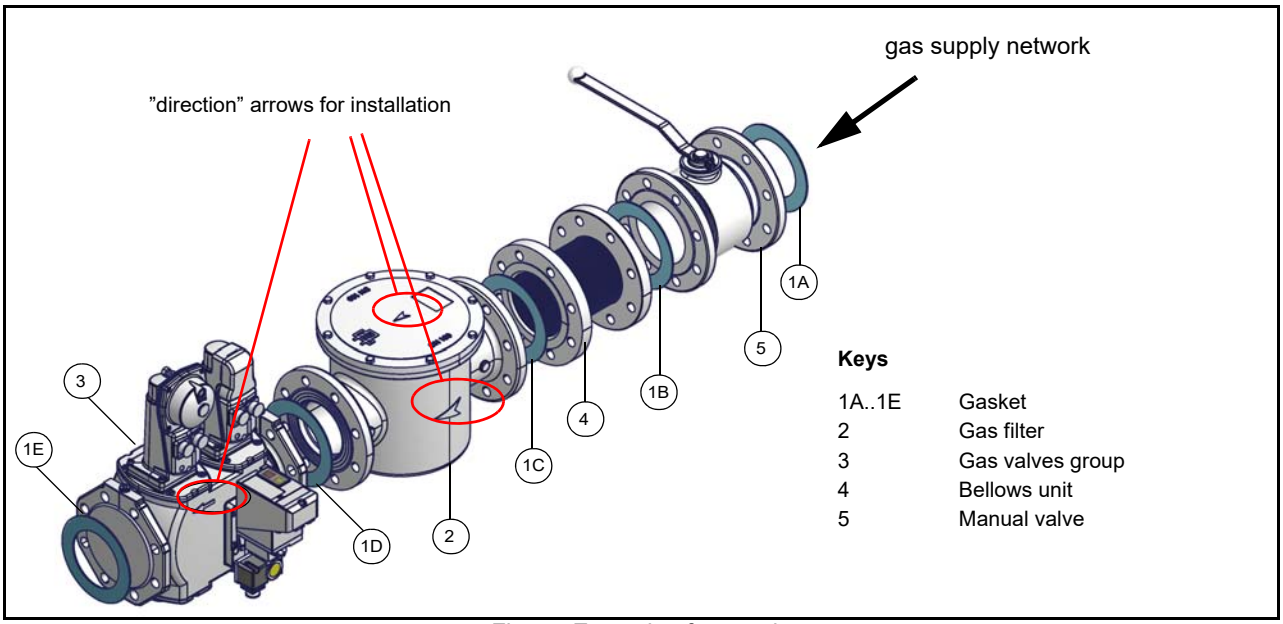

Fig. 5 - Example of gas train

To mount the gas train, proceed as follows:

1-a) in case of threaded joints: use proper seals according to the gas used;

1-b) in case of flanged joints: place a gasket (no. 1A..1E - Fig. 5) between the elements

2) fasten all the items by means of screws, according to the diagrams showed, observing the mounting direction for each item;

NOTE: the bellows unit, the manual cutoff valve and the gaskets are not part of the standard supply.

ATTENTION: once the gas train is mounted according to the diagram on Fig. 5, the gas proving test mus be performed, according to the procedure set by the laws in force.

ATTENTION: it is recommended to mount filter and gas valves to avoid that extraneous material drops inside the valves, during maintenance and cleaning operation of the filters (both the filters outside the valves group and the ones built-in the gas valves).

The procedures of installation fo the gas valves are showed in the next paragraphs, according to the gas train used:

- threaded gas trains with Multibloc Dungs MB-DLE or Siemens VGD20..
- flanged gas trains with Siemens VGD40..

MULTIBLOC DUNGS MB-DLE 405..412

Mounting

1. Mount flange onto tube lines: use appropriate sealing agent (see Fig. 8);
2. insert MB-DLE: note position of O rings (see Fig. 8);
3. tighten screws A, B, C and D (Fig. 6 - Fig. 7), accordind to the mounting positions (Fig. 9);
4. after installation, perform leakage and functional test;
5. disassembly in reverse order.

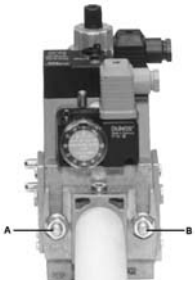

Fig. 6

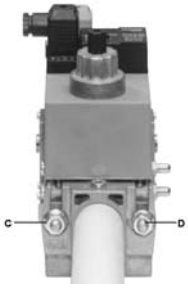

Fig. 7

Fig. 8

MOUNTING POSITIONS

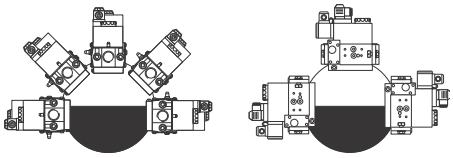

Fig. 9

MULTIBLOC DUNGS MB-DLE 415..420

Mounting

1. Loosen screws A and B **do not** unscrew (Fig. 10 - Fig. 11).
2. unscrew screws C and D (Fig. 10 - Fig. 11).
3. Remove MultiBloc between the threaded flanges (Fig. 11).
4. After mounting, perform leakage and functional tests.

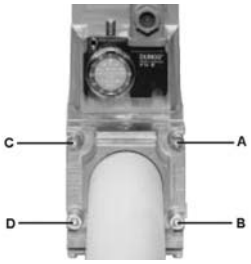

Fig. 10

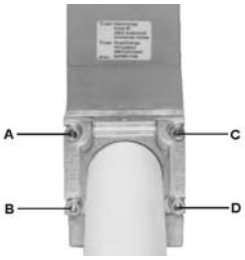

Fig. 11

Fig. 12

MOUNTING POSITIONS

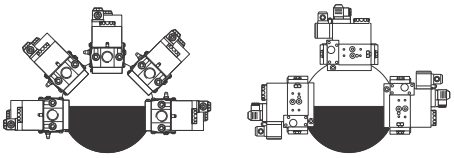

Fig. 13

Siemens VGD20.. and VGD40.. gas valves - with SKP2.. (pressure governor)

Mounting

- When mounting the VGD.. double gas valve, two flanges are required (as for VGD20.. model, the flanges are threaded); to prevent cuttings from falling inside the valve, first fit the flanges to the piping and then clean the associated parts;
- install the valve;
- the direction of gas flow must be in accordance with the direction of the arrow on the valve body;
- ensure that the bolts on the flanges are properly tightened;
- ensure that the connections with all components are tight;
- make certain that the O-rings and gaskets between the flanges and the double gas valve are fitted.
- Connect the reference gas pipe (**TP** in figure; 8mm-external size pipe supplied loose), to the gas pressure nipples placed on the gas pipe, downstream the gas valves: gas pressure must be measured at a distance that must be at least 5 times the pipe size.

Leave the blowhole free (**SA** in figure). Should the spring fitted not permit satisfactory regulation, ask one of our service centres for a suitable replacement.

Caution: the SKP2 diaphragm D must be vertical (see Fig. 14).

WARNING: removing the four screws BS causes the device to be unserviceable!

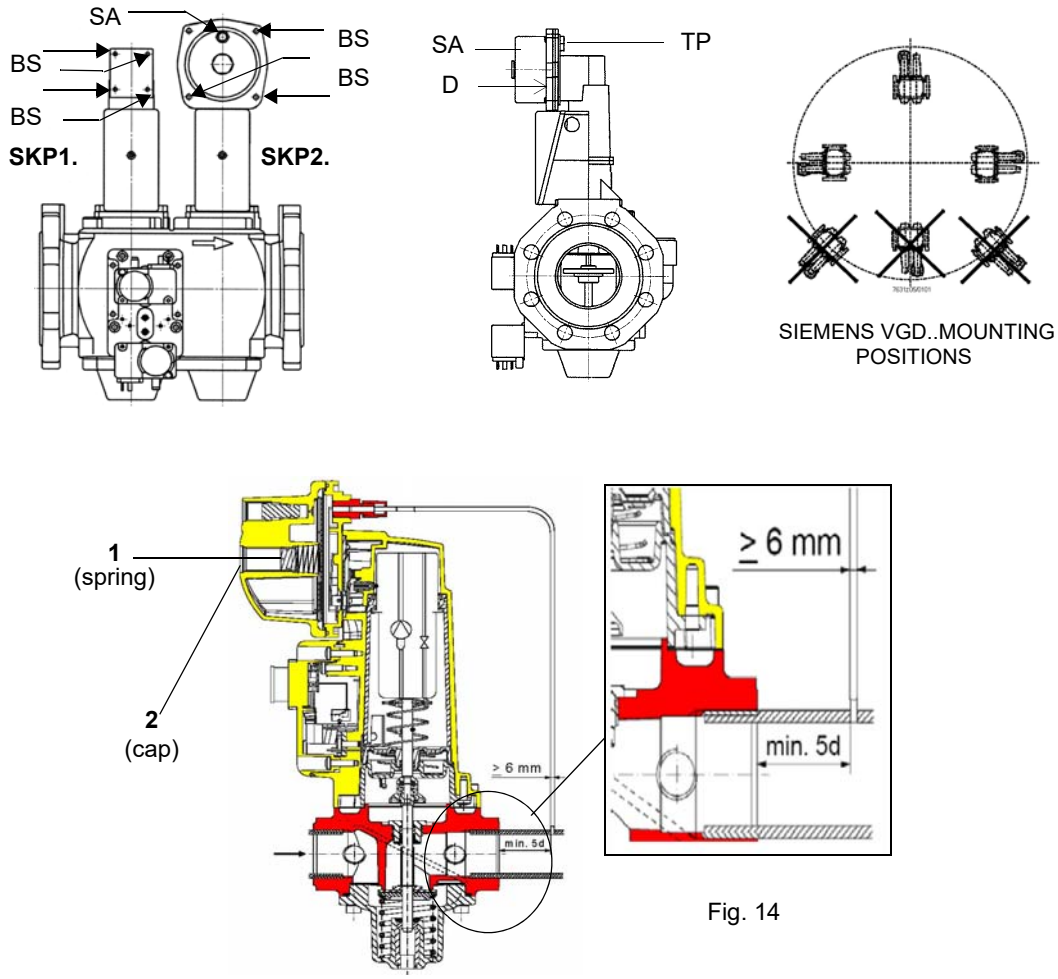

Fig. 14

Siemens VGD valves with SKP actuator:

The pressure adjusting range, upstream the gas valves group, changes according to the spring provided with the valve group.

Performance range (mbar)	0 - 22	15 - 120	100 - 250
Spring colour	neutral	yellow	red

Once the train is installed, connect the gas valves group and pressure switches plugs.

Gas Filter (if provided)

The gas filters remove the dust particles that are present in the gas, and prevent the elements at risk (e.g.: burner valves, counters and regulators) from becoming rapidly blocked. The filter is normally installed upstream from all the control and on-off devices.

ATTENTION: it is reccomended to install the filter with gas flow parallel to the floor in order to prevent dust fall on the safety valve during maintenance operation.

Gas Proving System VPS504 (Option)

The VPS504 check the operation of the seal of the gas shut off valves. This check, carried out as soon as the boiler thermostat gives a start signal to the burner, creates, by means of the diaphragm pump inside it, a pressure in the test space of 20 mbar higher than the supply pressure.
When wishing to monitor the test, install a pressure gauge ranged to that of the pressure supply point **PA**. If the test cycle is satisfactory, after a few seconds the consent light **LC** (yellow) comes on. In the opposite case the lockout light **LB** (red) comes on. To restart it is necessary to reset the appliance by pressing the illuminated pushbutton **LB**.

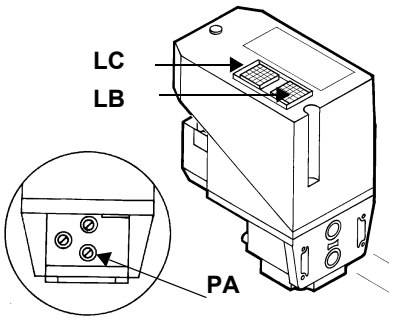

OIL TRAIN CONNECTIONS

Hydraulic diagrams for light oil supplying circuits

Fig. 15 - Gravity circuit

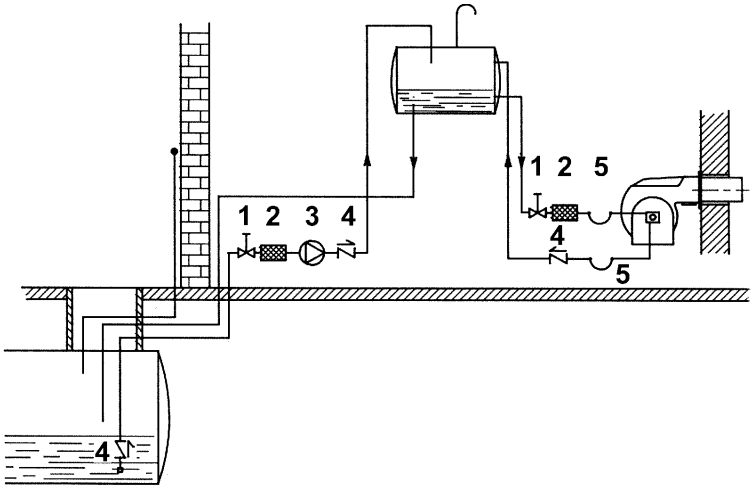

Fig. 16 - Ring circuit

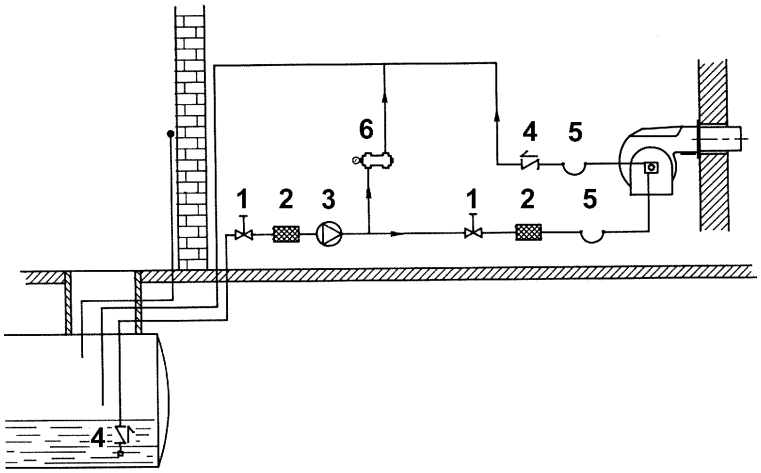

Fig. 17 - Suction circuit

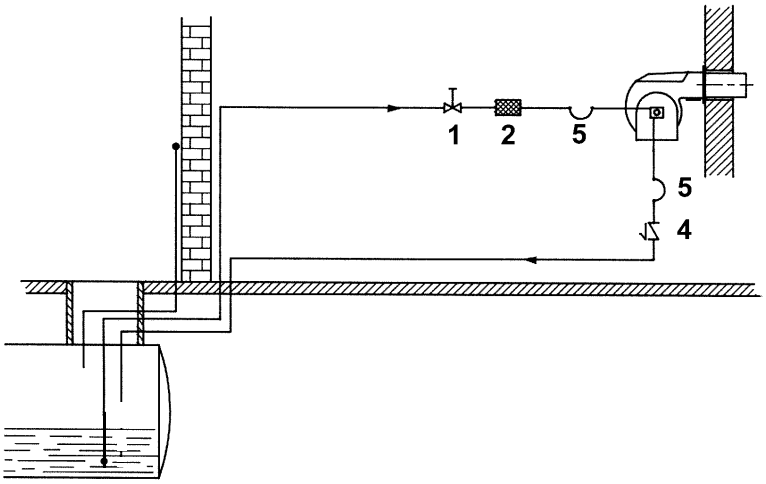

Key

1 Manual valve
2 Light oil filter
3 Light oil feeding pump
4 One way valve
5 Flexible hoses
6 Relief valve

NOTE: in plants where gravity or ring feed systems are provided, install an automatic interception device.

Depending on the installed pump, it is possible to design the plant for single or double pipe feeding line

Single-pipe system: a single pipe drives the oil from the tank to the pump's inlet. Then, from the pump, the pressurised oil is driven to the nozzle: a part comes out from the nozzle while the othe part goes back to the pump. In this system, the by-pass plug, if provided, must be removed and the optional return port, on the pump's body, must be sealed by steel plug and washer.

Double-pipe system: as for the single pipe system, a pipe that connects the tank to the pump's inlet is used besides another pipe that connects the pump's return port to the tank, as well. The excess of oil goes back to the tank: this installation can be considered self-bleeding. If provided, the inside by-pass plug must be installed to avoid air and fuel passing through the pump.

Burners come out from the factory provided for double-pipe systems. They can be suited for single-pipe system (recommended in the case of gravity feed) as decribed before.

To change from a 1-pipe system to a 2-pipe-system, insert the by-pass plug **G** (as for ccw-rotation- referring to the pump shaft).

Caution: Changing the direction of rotation, all connections on top and side are reversed.**HP UHE series pumps**: a kit (Art.-Nr.: 0841211) is required for the transition from 2-pipe to 1-pipe system

Suntec AJ6

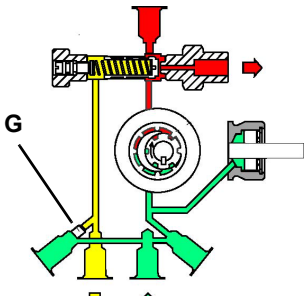

Suntec J..

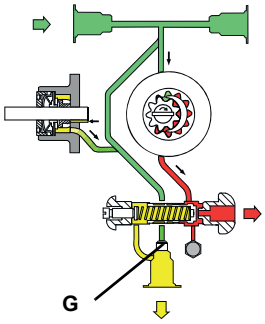

Suntec TA

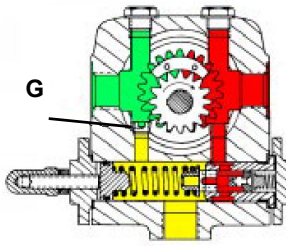

About the use of fuel pumps

- Do not use fuel with additives to avoid the possible formation over time of compounds which may deposit between the gear teeth, thus obstructing them.
- After filling the tank, wait before starting the burner. This will give any suspended impurities time to deposit on the bottom of the tank, thus avoiding the possibility that they might be sucked into the pump.
- On initial commissioning a "dry" operation is foreseen for a considerable length of time (for example, when there is a long suction line to bleed). To avoid damages inject some lubrication oil into the vacuum inlet.
- Care must be taken when installing the pump not to force the pump shaft along its axis or laterally to avoid excessive wear on the joint, noise and overloading the gears.
- Pipes should not contain air pockets. Rapid attachment joint should therefore be avoided and threaded or mechanical seal junctions preferred. Junction threads, elbow joints and couplings should be sealed with removable sg component. The number of junctions should be kept to a minimum as they are a possible source of leakage.
- Do not use PTFE tape on the suction and return line pipes to avoid the possibility that particles enter circulation. These could deposit on the pump filter or the nozzle, reducing efficiency. Always use O-Rings or mechanical seal (copper or aluminium gaskets) junctions if possible.
- An external filter should always be installed in the suction line upstream the fuel unit.

***ATTENTION**: before the burner first start, it is mandatory to fill the adduction pipes with diesel fuel and bleed out residual air bubbles. Prior to switching on the burner, check direction of rotation of the pump motor by briefly pressing the starter switch; ensure there are no anomalous sounds during equipment operation, and only then turn on the burner. Neglect to comply with this requirement will invalidate the burner warranty.*

Suntec J6 - J7 1001	
Oil viscosity	2 - 75 cSt
Oil temperature	0 - 90°C
Min. suction pressure	- 0,45 barto avoid gasing
Max. suction pressure	1.5 bar
Max. return pressure	1.5 bar
Rotation speed	3600 rpm max.

Key
1 Inlet G3/4”
2 Return G3/4”
3 Nozzle outlet G1/8”
4 Pressure gauge port G1/8”
5 Vacuum gauge port G1/2”
6 Pressure adjustment

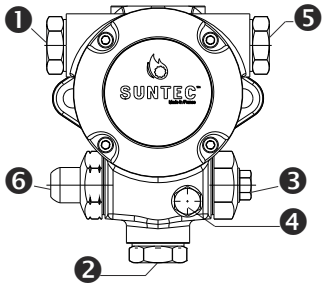

Suntec AJ6

Viscosity	2 - 75 cSt
Oil temperature	60°C max
Inlet maximum pressure	2 bar
Inlet minimum pressure	- 0.45 bar to avoid gasing
Rated speed	3600 rpm max.

Key
1 Suction
2 Return
3 To the nozzle
4 Pressure gauge
5 Vacuum pressure gauge
6 Pressure governor

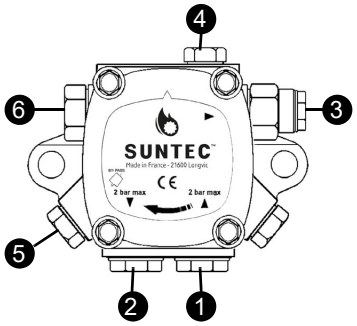

Suntec TA..

Oil viscosity	3 ÷ 75 cSt
Oil temperature	0 ÷ 150°C
Min. suction pressure	- 0.45 bar to avoid gasing
Max. suction pressure	5 bar
Max. return pressure	5 bar
Rotation speed	3600 rpm max.

Key
1. Inlet G1/2
2. To the nozzle G1/2
3. Return G1/2
4. Pressure gauge port G1/4
5. Vacuum gauge port G1/4
6. Pressure governor

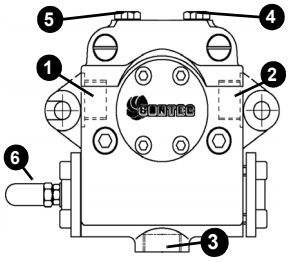

Diesel filters

	Item	Note	Connection	Max. operating pressure	Max. operating temperature	Filtering degree	Protection
6	20201PL	-	3/8”	1 bar	-20, 60 °C	100 µ	-

Connecting the oil flexible hoses to the pump

To connect the flexible oil hoses to the pump, proceed as follows, according to the pump provided:

1 remove the closing nuts A and R on the inlet and return connections of the pump;

2 screw the rotating nut of the two flexible hoses on the pump **being careful to avoid exchanging the lines**: see the arrows marked on the pump.

For further information, refer to the technical documentation of the pump.

.

Suntec J..	Suntec AJ6	Suntec TA
	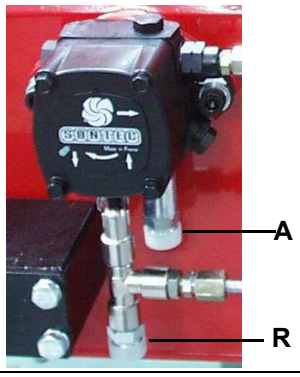	

ELECTRICAL CONNECTIONS

WARNING! Respect the basic safety rules. make sure of the connection to the earthing system. do not reverse the phase and neutral connections. fit a differential thermal magnet switch adequate for connection to the mains.

WARNING! before executing the electrical connections, pay attention to turn the plant's switch to OFF and be sure that the burner's main switch is in 0 position (OFF) too. Read carefully the chapter "WARNINGS", and the "Electrical connections" section.

ATTENTION: Connecting electrical supply wires to the burner teminal block MA, be sure that the ground wire is longer than phase and neutral ones.

To execute the electrical connections, proceed as follows:

1 remove the cover from the electrical board, unscrewing the fixing screws;
2 execute the electrical connections to the supply terminal board as shown in the attached wiring diagrams;
3 check the direction of the fan motor (see next paragraph);
4 refit the panel cover.

WARNING: (only for double stage and progressive burners) The burner is provided with an electrical bridge between terminals 6 and 7; when connecting the high/low flame thermostat, remove this bridge before connecting the thermostat.

Rotation of electric motor

Once the electrical connection of the burner is executed, remember to check the rotation of the electric motor. The motor should rotate according to the "arrow" symbol on the body. In the event of wrong rotation, reverse the three-phase supply and check again the rotation of the motor.

CAUTION: check the motor thermal cut-out adjustment

NOTE: the burners are supplied for three-phase 380 V or 400 V supply, and in the case of three-phase 220 V or 230 V supply it is necessary to modify the electrical connections into the terminal box of the electric motor and replace the overload tripped relay.

Note on elecrtical supply

If the power supply to the burner is 230V three-phase or 230V phase-phase (without a neutral), with the Siemens control box, between the terminal 2 (terminal X3-04-4 in case of LMV2x, LMV3x, LMV5x, LME7x) on the board and the earth terminal, an RC Siemens RC466890660 filter must be inserted.

Key
C - Capacitor (22nF/250V)
LME / LMV - Siemens control box
R - Resistor (1MΩ)
M - Terminal 2 (LGB,LMC,LME), terminal X3-04-4 (LMV2x, LMV3x, LMV5, LME7x)
RC466890660 - RC Siemens filter

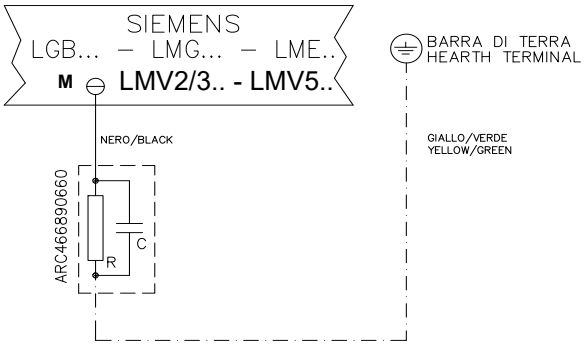

For LMV5 control box, please refer to the clabeling recommendations avaible on the Siemens CD attached to the burner

PART III: OPERATION

WARNING: before starting the burner up, be sure that the manual cutoff valves are open and check that the pressure upstream the gas train complies the value quoted on paragraph "Technical specifications". Be sure that the mains switch is closed.

DANGER: During commissioning operations, do not let the burner operate with insufficient air flow (danger of formation of carbon monoxide); if this should happen, make the gas decrease slowly until the normal combustion values are achieved.

WARNING: never loose the sealed screws! otherwise, the device warranty will be immediately invalidate!

LIMITATIONS OF USE

THE BURNER IS AN APPLIANCE DESIGNED AND CONSTRUCTED TO OPERATE ONLY AFTER BEING CORRECTLY CONNECTED TO A HEAT GENERATOR (E.G. BOILER, HOT AIR GENERATOR, FURNACE, ETC.), ANY OTHER USE IS TO BE CONSIDERED IMPROPER AND THEREFORE DANGEROUS.

THE USER MUST GUARANTEE THE CORRECT FITTING OF THE APPLIANCE, ENTRUSTING THE INSTALLATION OF IT TO QUALIFIED PERSONNEL AND HAVING THE FIRST COMMISSIONING OF IT CARRIED OUT BY A SERVICE CENTRE AUTHORISED BY THE COMPANY MANUFACTURING THE BURNER.

A FUNDAMENTAL FACTOR IN THIS RESPECT IS THE ELECTRICAL CONNECTION TO THE GENERATOR'S CONTROL AND SAFETY UNITS (CONTROL THERMOSTAT, SAFETY, ETC.) WHICH GUARANTEES CORRECT AND SAFE FUNCTIONING OF THE BURNER.

THEREFORE, ANY OPERATION OF THE APPLIANCE MUST BE PREVENTED WHICH DEPARTS FROM THE INSTALLATION OPERATIONS OR WHICH HAPPENS AFTER TOTAL OR PARTIAL TAMPERING WITH THESE (E.G. DISCONNECTION, EVEN PARTIAL, OF THE ELECTRICAL LEADS, OPENING THE GENERATOR DOOR, DISMANTLING OF PART OF THE BURNER).

NEVER OPEN OR DISMANTLE ANY COMPONENT OF THE MACHINE EXCEPT FOR ITS MAINTENANCE.

TO SECURE THE MACHINE, ACT ON THE ISOLATOR SWITCH. IN CASE OF ANOMALIES THAT REQUIRED A SHUT DOWN OF THE BURNER, IT'S POSSIBLE TO ACT ON THE AUXILIARY LINE SWITCH, LOCATED ON THE BURNER FRONT PANEL.

IN CASE OF A BURNER SHUT-DOWN, RESET THE CONTROL BOX BY MEANS OF THE RESET PUSHBUTTON. IF A SECOND SHUT-DOWN TAKES PLACE, CALL THE TECHNICAL SERVICE, WITHOUT TRYING TO RESET FURTHER.

WARNING: DURING NORMAL OPERATION THE PARTS OF THE BURNER NEAREST TO THE GENERATOR (COUPLING FLANGE) CAN BECOME VERY HOT, AVOID TOUCHING THEM SO AS NOT TO GET BURNT.

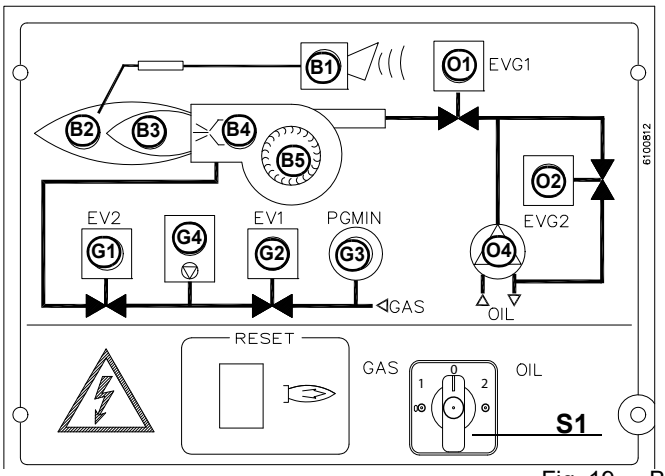

Keys

S1	Main switch (0=Off, 1=GAS, 2=OIL)
B1	Lock-out LED
B2	Hi-flame operation LED
B3	Lo-flame operation LED
B4	“Ignition transformer operation” LED
B5	“Fan motor overload tripped” LED
G1	Gas valves EV2 operation signalling lamp
G2	Gas valves EV1 operation signalling lamp
G3	Gas pressure switch signal lamp
G4	Gas proving system lockout signalling lamp
O1	EVG1 solenoid valve operation LED
O2	EVG2 solenoid valve operation LED
O4	Oil pump in operation LED

Fig. 19 - Burner control panel

Fuel selection:

- In order to start the burner with gas or light oil, the operator must commute the selector on the burner control panel on (1) = gas, or (2) = light oil.
  If the selector is set on (1) the gas cock must be open, while the light oil cock must be closed. Viceversa if the selector is set on (2).
  CAUTION: if the fuel chosen is oil, be sure the cutoff valves on the feed and return pipes are open.
- Check the control box is not locked (signalling light **B1**, on); if so, reset it by means of the reset button.
- Check the series of thermostats and pressure switches turn the burner to on.

Gas operation

- Check the gas feeding pressure is sufficient (signalling lamp **G3** on).
- **Burners fitted with gas proving system:** the gas proving system test begins; when the test is performed the proving system LED turns on. At the end of the test, the burner staring cycle begins: in case of leakage in a valve, the gas proving system stops the burner and the lamp **B1** turns on.

NOTE: if the burner is fitted with Dungs VPS504, the pre-purgue phase starts once the gas proving system is successfully performed.
Since the pre-purgue phase must be carried out with the maximum air rate, the control box drives the actuator opening and when the maximum opening position is achieved, the pre-purge time counting starts.

- At the end of the pre-purge time, the actuator drives the complete closing (ignition with gas position) and, as this is achieved the ignition transformer is energised (LED **B4** is on); the gas valves open.
- Few seconds after the valves opening, the transformer is de-energised and lamp **B4** turns off.
- The burner is now operating, meanwhile the actuator goes to the high flame position and, after some seconds, the two-stage operation begins; the burner is driven automatically to high flame or low flame, according to the plant requirements.

Operation in high or low flame is signalled by lamp **B2** on the frontal panel.

Light oil operation

- The fan motor starts and the pre-purge phase as well. Since the pre-purge phase must be carried out at the maximum air rate, the control box drives the actuator opening and when the maximum opening position is reached, the pre-purge time counting starts.
- At the end of the pre-purge time, the actuator is in the light oil ignition position: the ignition transformer is energised (lamp **B4** on); the ignitor gas valves (if provided) and the light oil valves open. Few seconds after the valves opening, the transformer is de-energised and lamp **B4** turns off.
- The burner is now operating, meanwhile the actuator goes to the high flame position; after some seconds, the two-stage operation begins; the burner is driven automatically to high flame or low flame, according to the plant requirements.Operation in high or low flame is signalled by LED **B2** on the burner control panel.

The fuel is pushed into the pump to the nozzle at the delivery pressure set by the pressure governor. The solenoid valve stops the fuel immission into the combustion chamber. The fuel flow rate that is not burnt goes back to the tank through the return circuit. The nozzle is feeded at constant pressure, while the return line pressure is adjusted by means of the pressure governor controlled by an actuator.

AIR FLOW AND FUEL ADJUSTMENT

WARNING! During commissioning operations, do not let the burner operate with insufficient air flow (danger of formation of carbon monoxide); if this should happen, make the fuel decrease slowly until the normal combustion values are achieved.

WARNING! the combustion air excess must be adjusted according to the values in the following chart.

Recommended combustion parameters		
Fuel	Recommended (%) CO_2	Recommended (%) O_2
Natural gas	9 ÷ 10	3 ÷ 4.8
LPG	11 ÷ 12	2.8 ÷ 4.3
Light oil	11.5 ÷ 13	2.9 ÷ 4.9

Fuel

WARNING! The burner must be used only with the fuel specified in the burner data plate .

Type	--
Model	--
Year	--
S.Number	--
Output	--
Oil Flow	--
Fuel	--
Category	--
Gas Pressure	--
Viscosity	--
El.Supply	--
El.Consump.	--

ADJUSTMENT PROCEDURE FOR LIGHT OIL OPERATION

The oil flow rate can be adjusted choosing a nozzle that suits the boiler/utilisation output and setting the delivery and return pressure values according to the ones quoted on the following charts.

NOZZLE	NOZZLE SUPPLY PRESSURE bar	HIGH FLAME RETURN PRESSURE bar	LOW FLAME RETURN PRESSURE bar
MONARCH BPS	20	See table below	See table below
BERGONZO A3	20	11 ÷ 13	5 (recommended)

MONARCH NOZZLE

	RETURN PRESSURE bar														
Nozzle size (GPH)	0	1,4	2,8	4,1	5,5	6,9	8,3	9,6	11	12,4	13,8	15,2	Flow rate in kg/h with close return	Pressure with close return to use in the nozzle choice)
0,75	1,3	1,6	2,1	2,5									3,2	5,5
1,0	2,1	2,1	2,4	3,0	3,7	4,6	5,2						5,4	8,6
1,5	2,9	3,0	3,3	4,1	4,9	6,0	7,0						7,9	9,3
2,0	4,6	5,1	5,4	6,4	7,5	8,7	9,9						10,5	9,3
2,5	3,5	4,1	4,9	5,9	7,5	9,1	10,8	12,4					13,5	10,7
3,0	5,6	5,9	6,2	7,2	8,7	10,0	11,9	13,8					15,3	11,0
3,5	7,0	7,2	7,8	8,7	9,9	11,3	12,4	13,7	18,4				19,7	12,1
4,0	7,8	7,9	8,3	8,6	10,3	11,6	13,0	14,1	17,3	20,2			21,0	12,8
4,5	9,2	9,4	10,0	11,0	11,9	12,9	14,3	15,3	17,2	24,5			24,8	14,1
5,0	10,8	11,0	11,3	11,6	13,0	14,3	15,6	17,0	18,6	24,3			26,2	13,4
5,5	9,7	10,0	10,2	11,1	12,1	13,4	14,8	16,4	18,1				29,7	12,4
6,0	9,2	9,5	9,9	10,0	10,8	12,4	14,1	15,7	17,5	18,9	29,3		33,1	14,8
6,5	10,5	10,8	11,1	11,4	12,1	13,8	15,3	16,5	18,4	20,0	22,4	36,2	36,7	15,5
7,0	8,7	9,4	10,0	11,4	13,2	14,9	17,2	19,6	23,1	25,1	33,2		33,7	15,2
7,5	11,3	11,8	10,3	13,0	14,3	15,3	17,2	19,2	21,8	24,2	30,4		39,3	14,1
8,0	9,9	9,9	10,2	11,3	12,6	14,3	16,1	18,4	21,1	24,3			39,7	13,8
9,0	10,8	11,0	11,1	12,6	14,5	16,1	18,8	21,8	25,1	28,9			45,9	13,8
9,5	11,4	11,6	12,2	13,7	15,3	17,3	19,7	23,2	26,5	30,0	33,5		49,1	14,5
10,5	11,6	11,6	12,2	13,7	15,4	17,6	20,7	24,0	27,3	31,2	35,5		50,9	15,2
12,0	13,7	14,0	14,3	15,6	18,1	21,9	25,8	30,2	34,7	39,7	44,5		61,7	14,5
13,8	13,4	13,4	13,7	15,6	18,1	23,2	28,3	34,7	41,0	47,7	54,7		71,2	15,2
15,3	16,5	16,9	17,2	18,4	20,7	23,8	28,3	33,1	36,9	44,5	51,8		76,0	15,2
17,5	21,6	21,9	21,9	23,2	25,8	29,6	34,7	40,7	46,4	54,0	62,3	71,2	89,7	15,5
19,5	19,7	20,0	20,3	21,3	23,8	28,0	32,7	39,7	47,1	55,3	66,4	75,0	97,3	16,2
21,5	24,8	24,8	25,1	26,1	28,3	33,4	37,8	45,1	53,1	61,7	73,8	83,9	106,5	16,6
24,0	26,7	27,0	27,7	29,3	31,8	36,6	45,8	55,0	65,5	77,3	90,9	106,2	111,6	15,9
28,0	28,6	28,9	30,5	35,3	43,6	42,1	67,1	85,5	107,1	127,8	151,7		154,8	14,8
30,0	25,8	25,8	28,6	35,9	43,2	56,3	73,8	90,6	102,4	120,8	144,0	160,9	164,1	15,5
35,0	34,3	35,0	40,7	49,9	63,6	82,7	103,6	122,1	145,9	120,8			186,0	13,8
40,0	52,8	53,1	60,4	70,6	86,8	106,5	128,8	149,7	179,6	172,6			217,2	13,1
45,0	73,4	73,4	83,0	93,5	112,2	134,5	157,7	185,0	225,7	209,8			242,3	12,4
50,0	92,5	94,4	104,6	118,9	139,9	167,2	196,8	231,8	263,3				266,8	11,4

Tab. 1 - Monarch nozzle

N.B. Specific gravity of the light oil: 0.840kg/dm^3

Example: If the nozzle provided is mod. MONARCH 10.5 GPH, when the return pressure is about 13.80bar, the flow rate will be 35.5kg/h. If the return pressure is 8.3bar (with the same nozzle), the flow rate value will be 20.7kg/h. The flow rate in the High-flame operation is related to the nozzle provided with close return. The flow rate in the Low-flame operation can be adjusted by means of the manual pressure regulator, taking care no to go under 8bar.

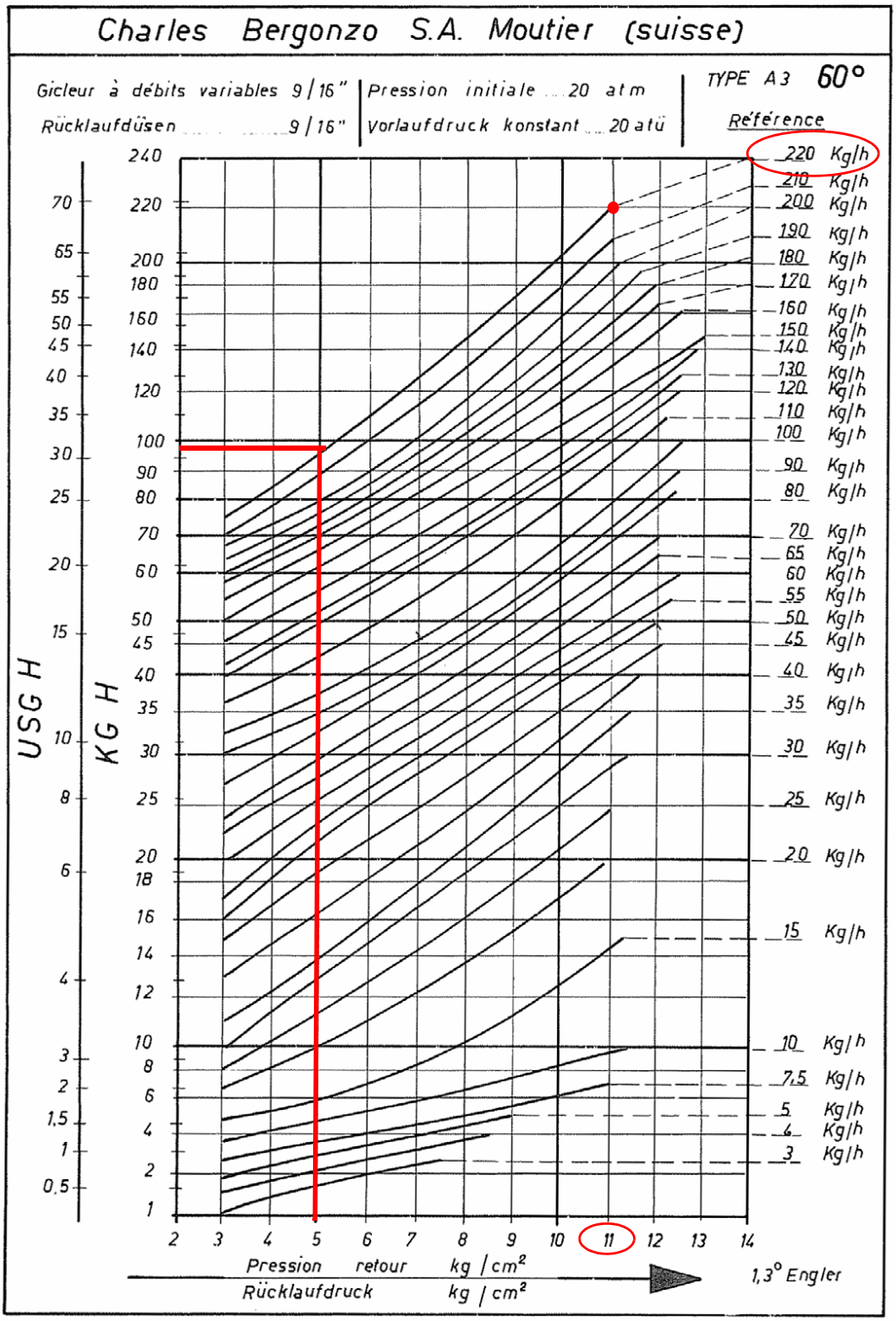

NOZZLE SUPPLY PRESSURE = 20 bar

Example (Bergonzo): if a 220kg/h flow rate BERGONZO nozzle is provided, set the return pressure at 11bar, supply at 20bar on the delivery to get a 220kg/h flow rate. If the return pressure needed is 5bar, instead, act on the **V** adjusting screw on the pressure governor. The flow rate will then be about 95kg/h (see the example showed on the Bergonzo diagram).

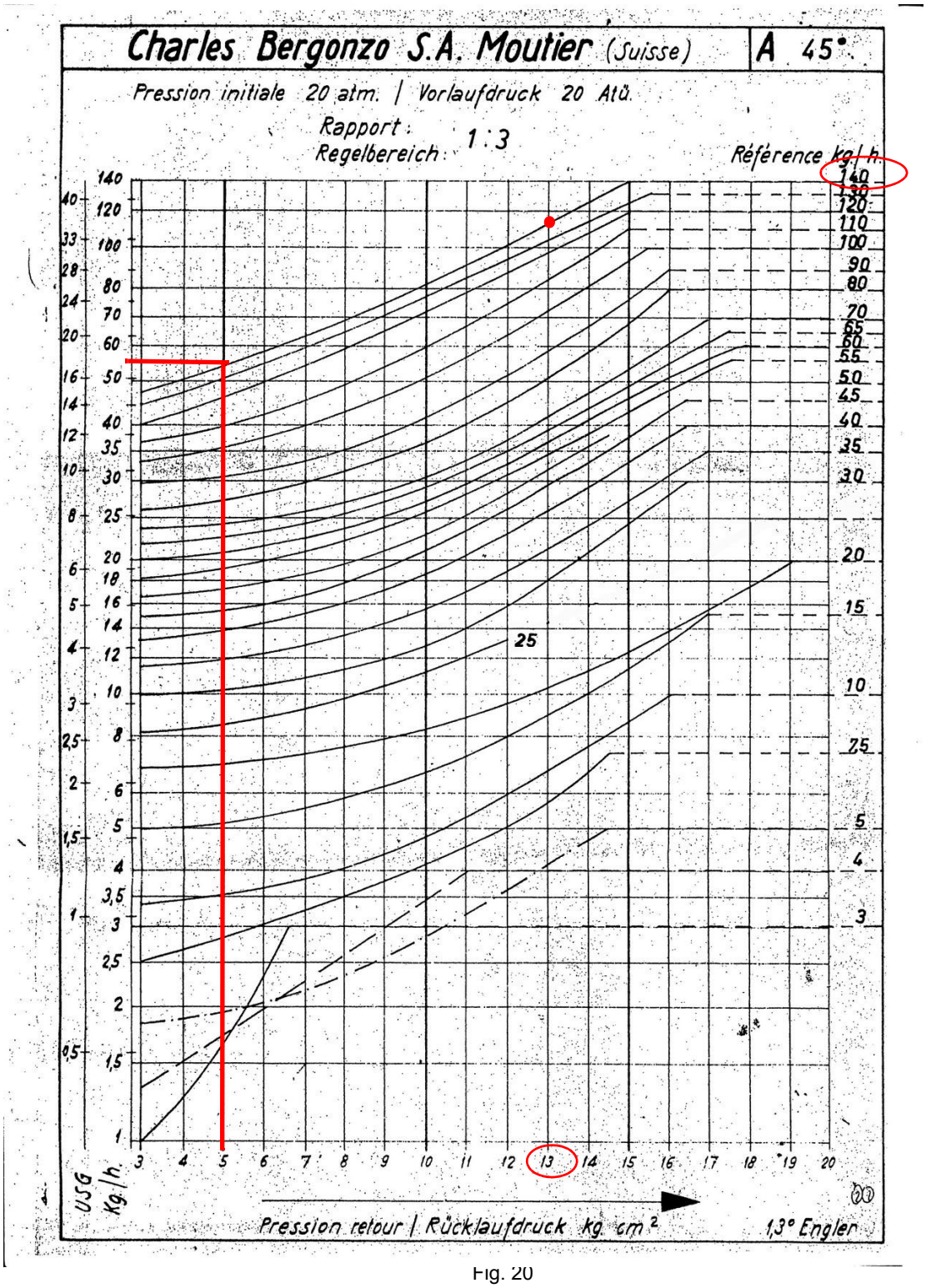

Fig. 20

Example (Bergonzo): if a 140kg/h flow rate BERGONZO 45° nozzle is provided, set the return pressure at 13bar, supply at 20bar on the delivery to get a 110kg/h flow rate. If the return pressure needed is 5bar, instead, act on the adjusting screw on the pressure governor. The flow rate will then be about 55kg/h (see the example showed on the Bergonzo diagram).

FLUIDICS KW3...45°

NOZZLE SUPPLY PRESSURE = 20 bar. VISCOSITY AT NOZZLE = 5 cSt

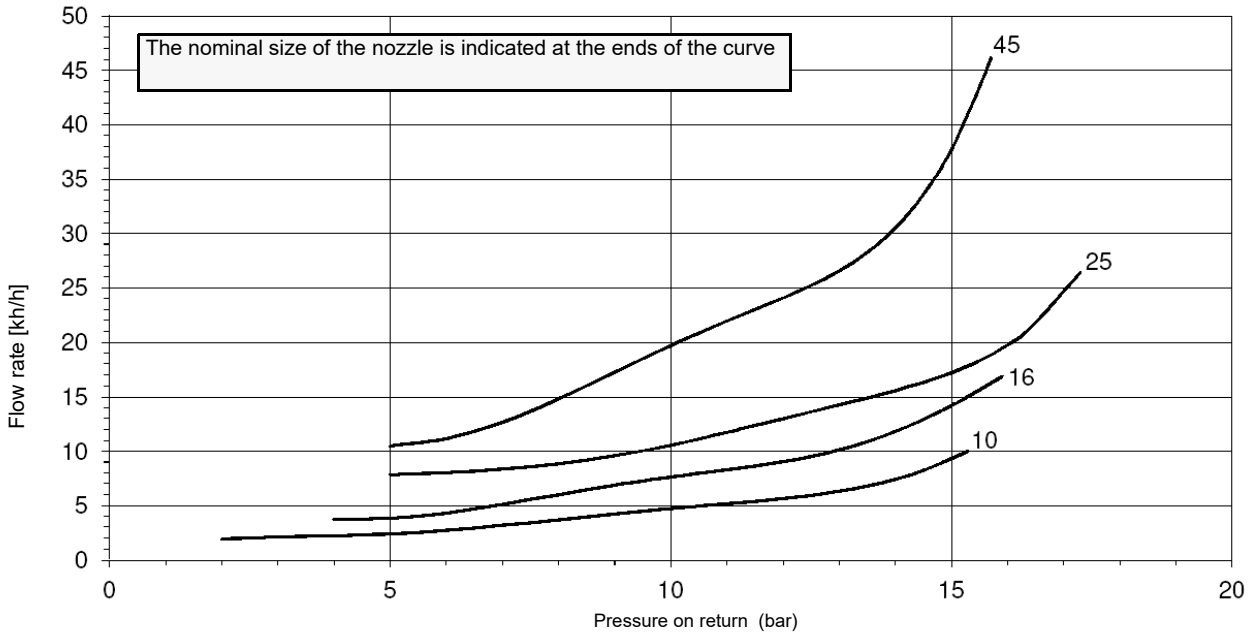

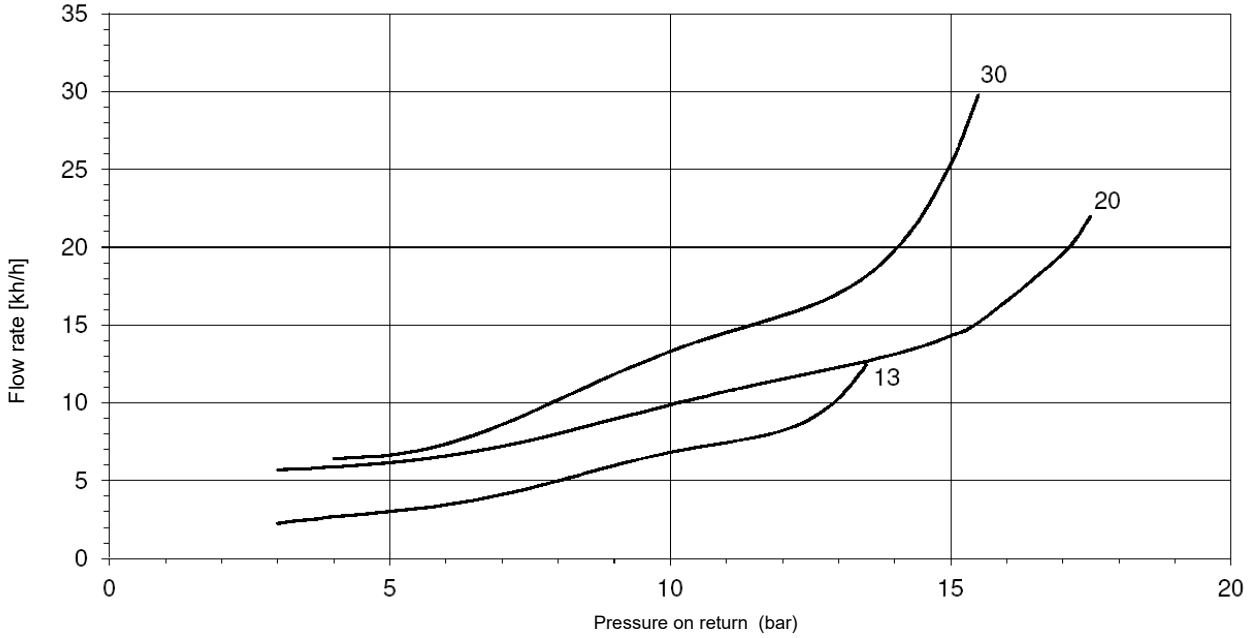

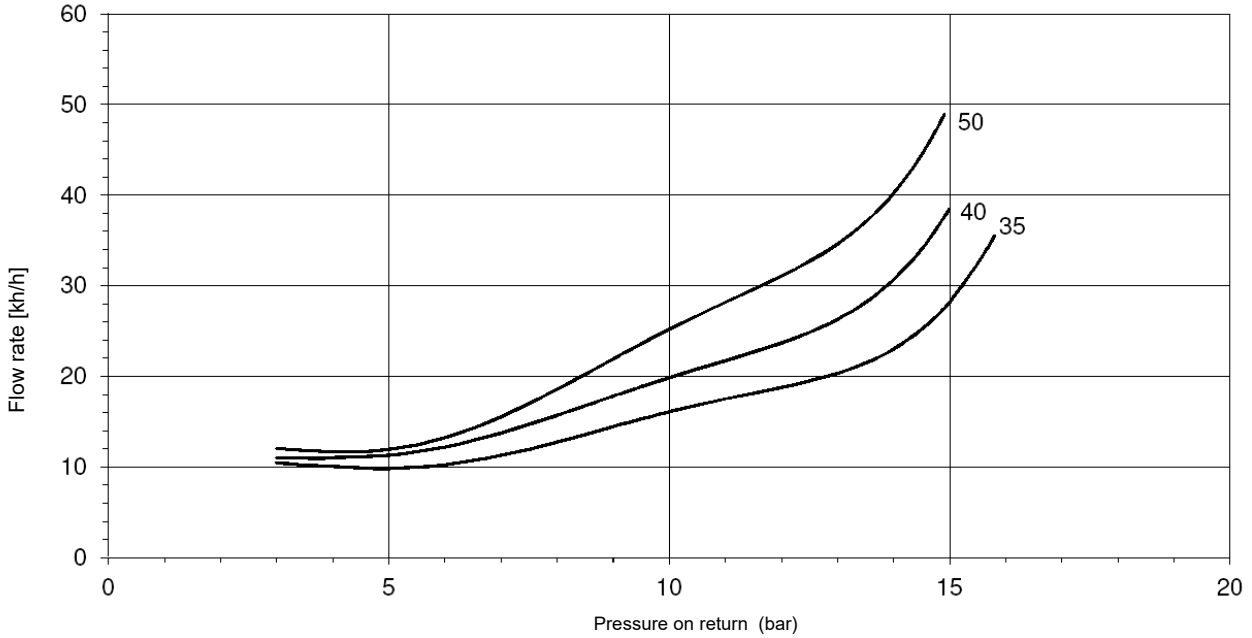

FLUIDICS KW3...45°

NOZZLE SUPPLY PRESSURE = 20 bar. VISCOSITY AT NOZZLE = 5 cSt

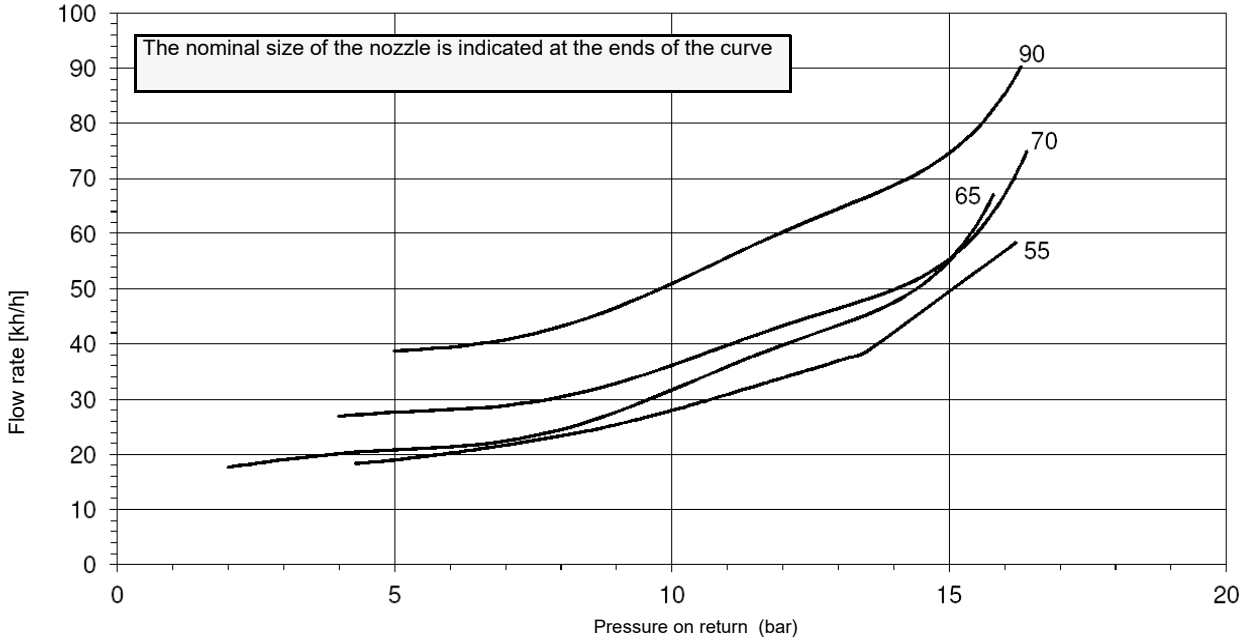

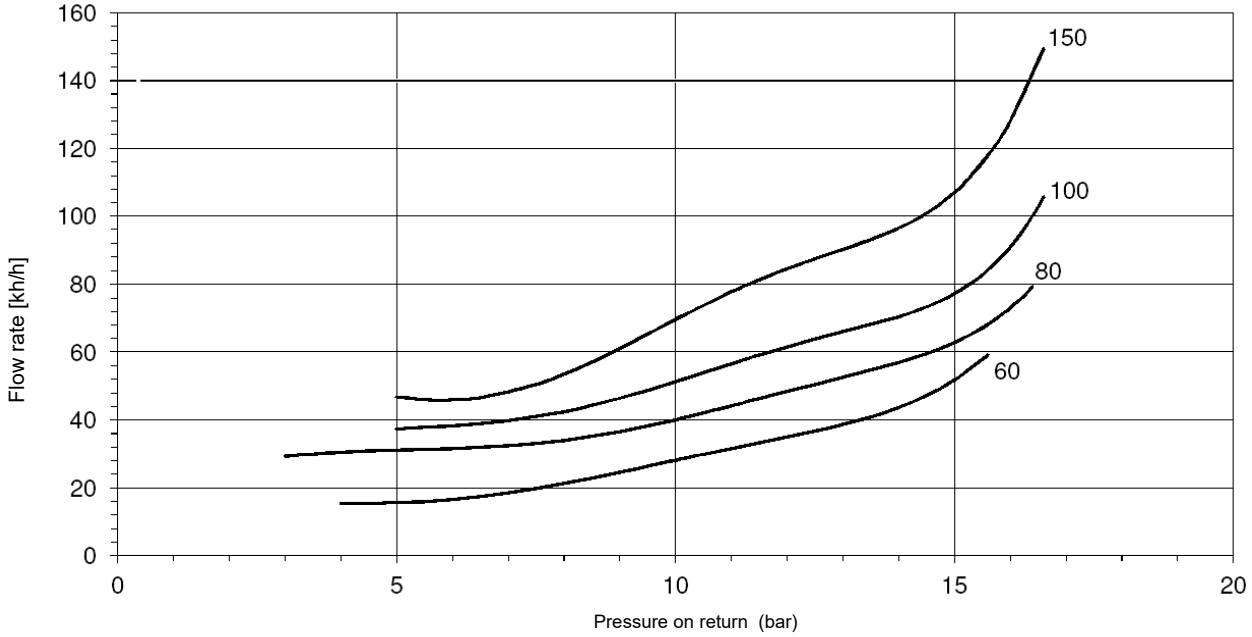

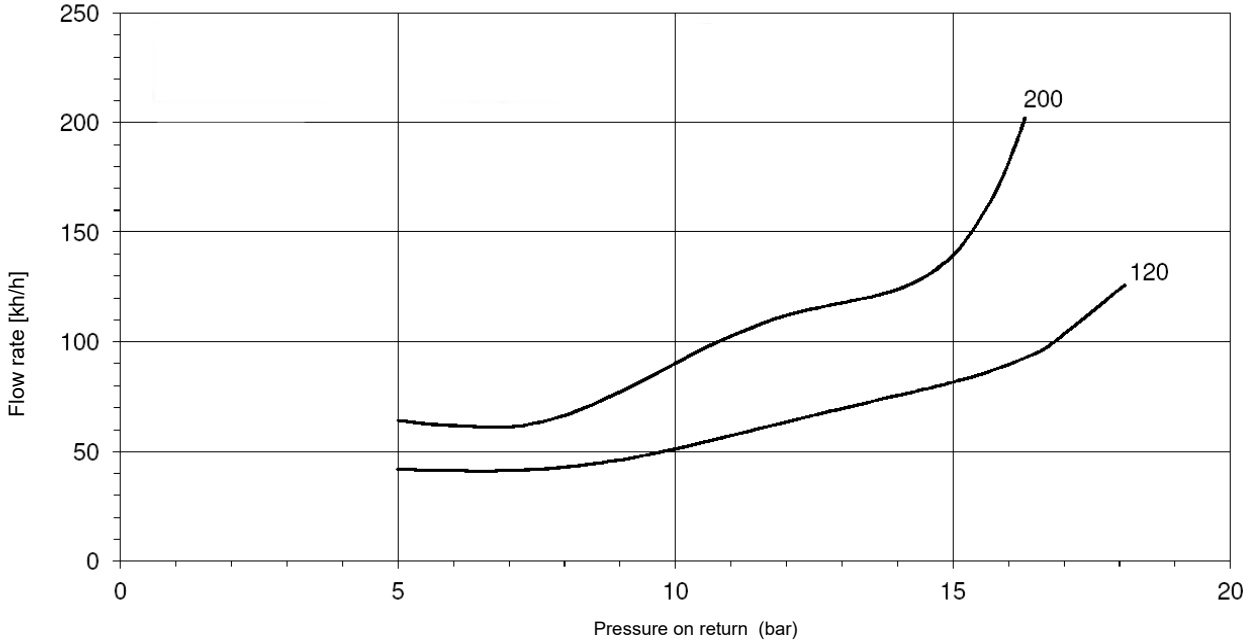

FLUIDICS KW3...60°

NOZZLE SUPPLY PRESSURE = 20 bar. VISCOSITY AT NOZZLE = 5 cSt

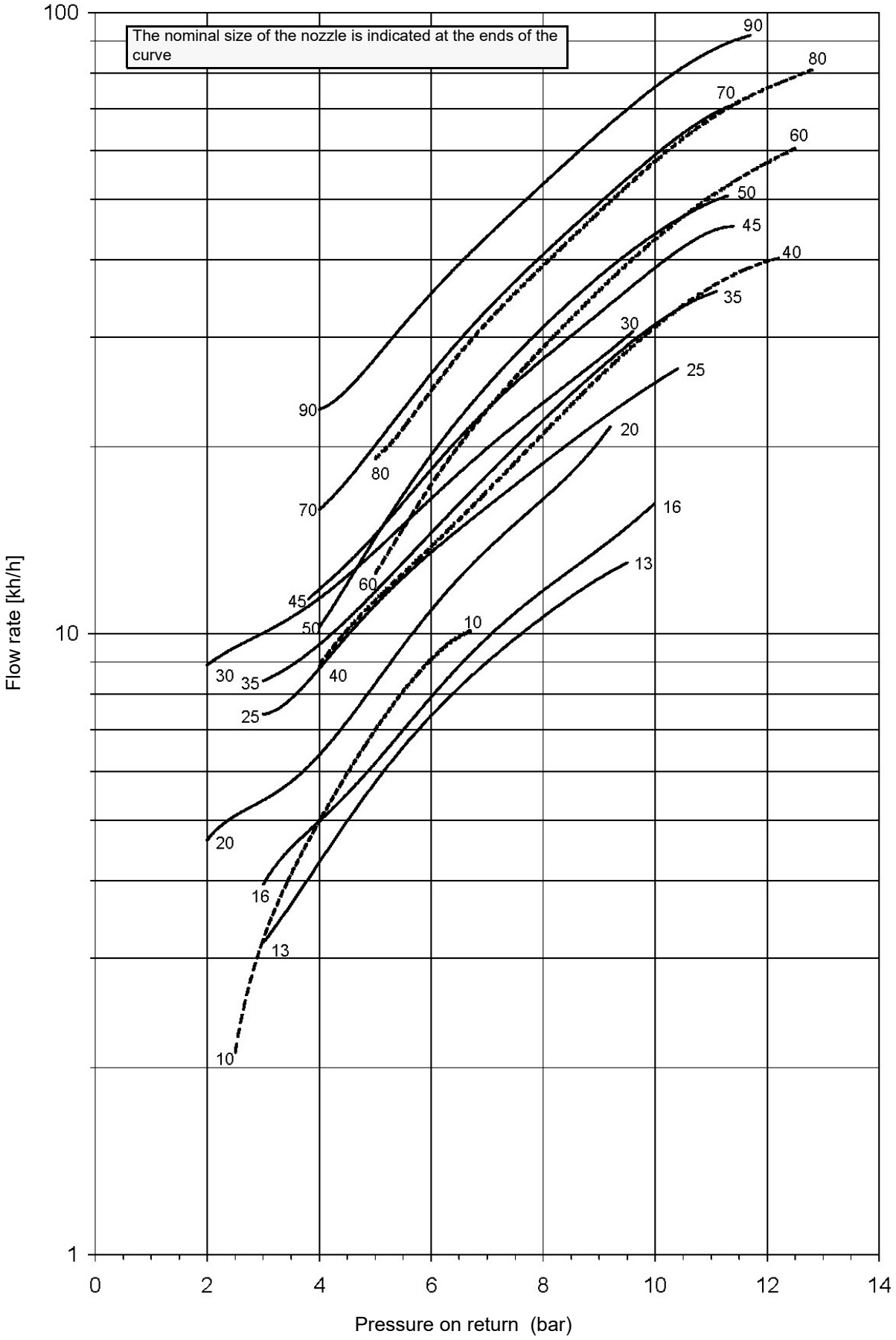

FLUIDICS KW3...60°

NOZZLE SUPPLY PRESSURE = 20 bar. VISCOSITY AT NOZZLE = 5 cSt

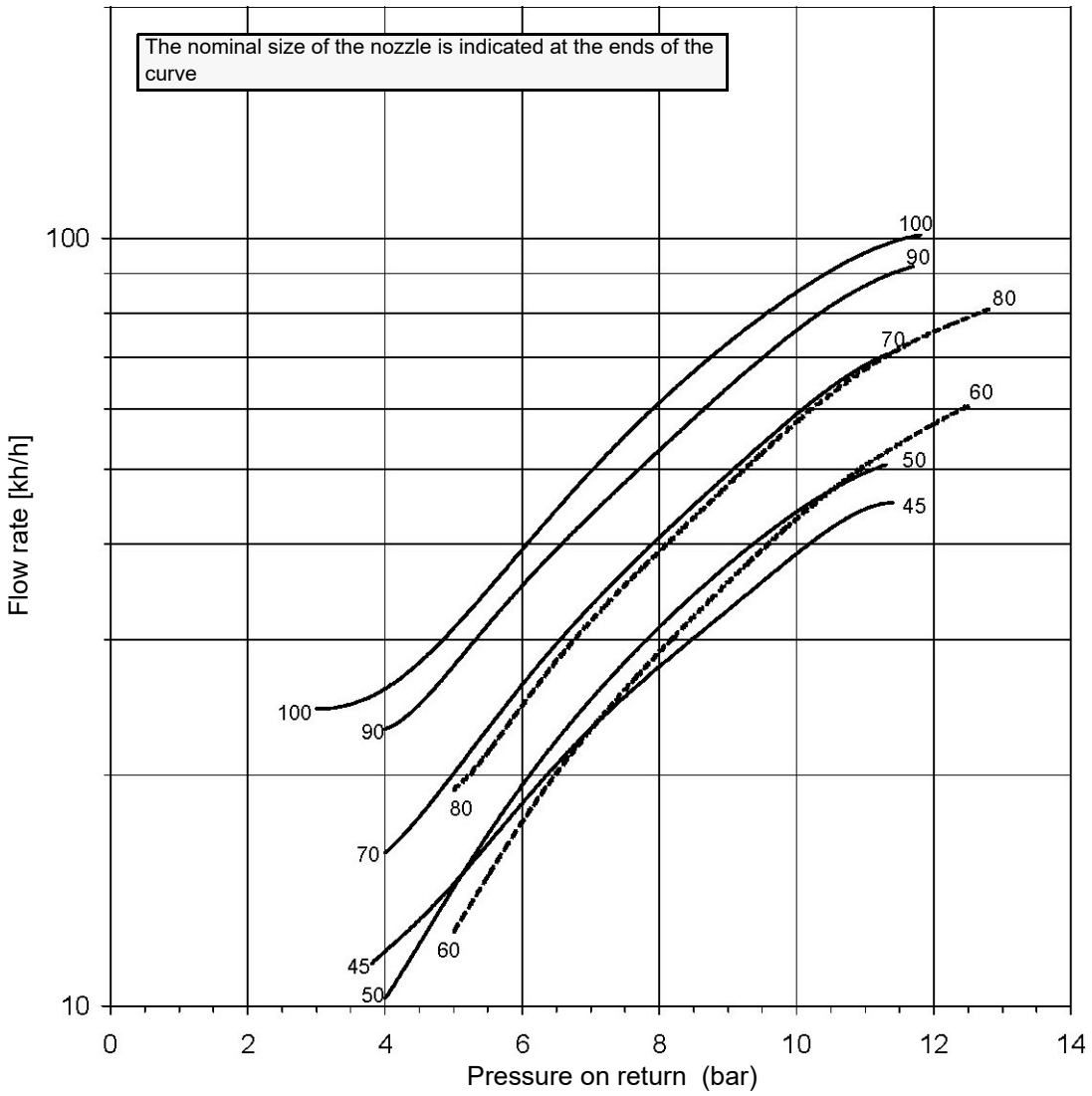

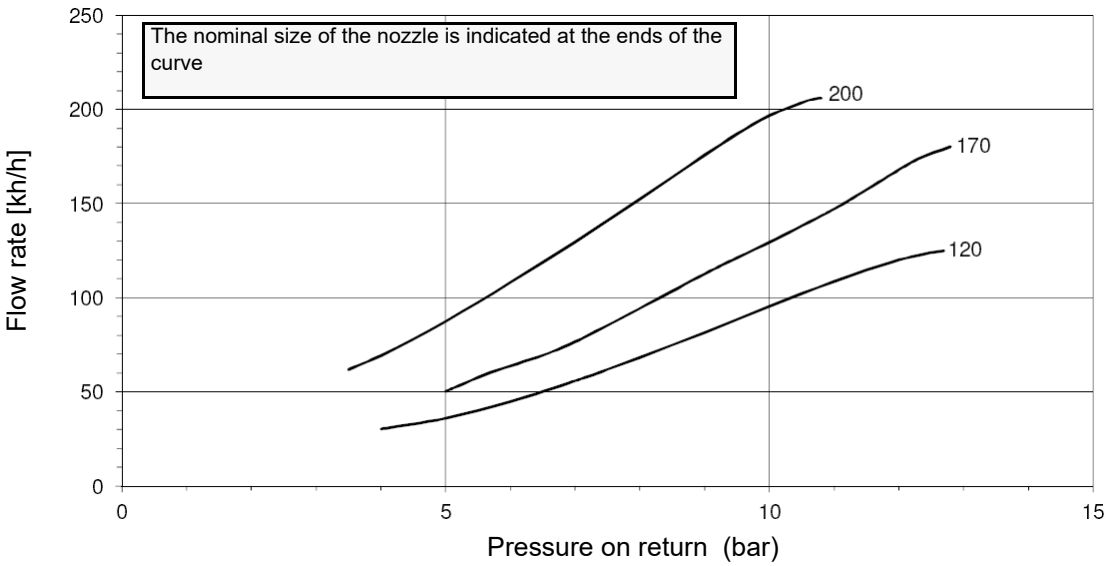

FLUIDICS KW3...60°

NOZZLE SUPPLY PRESSURE = 20 bar. VISCOSITY AT NOZZLE = 5 cSt

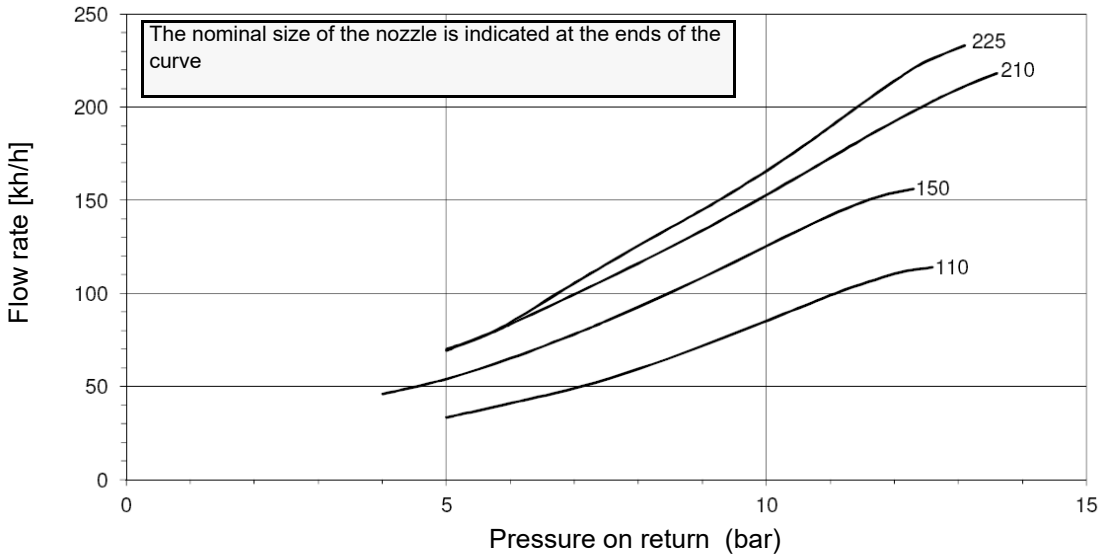

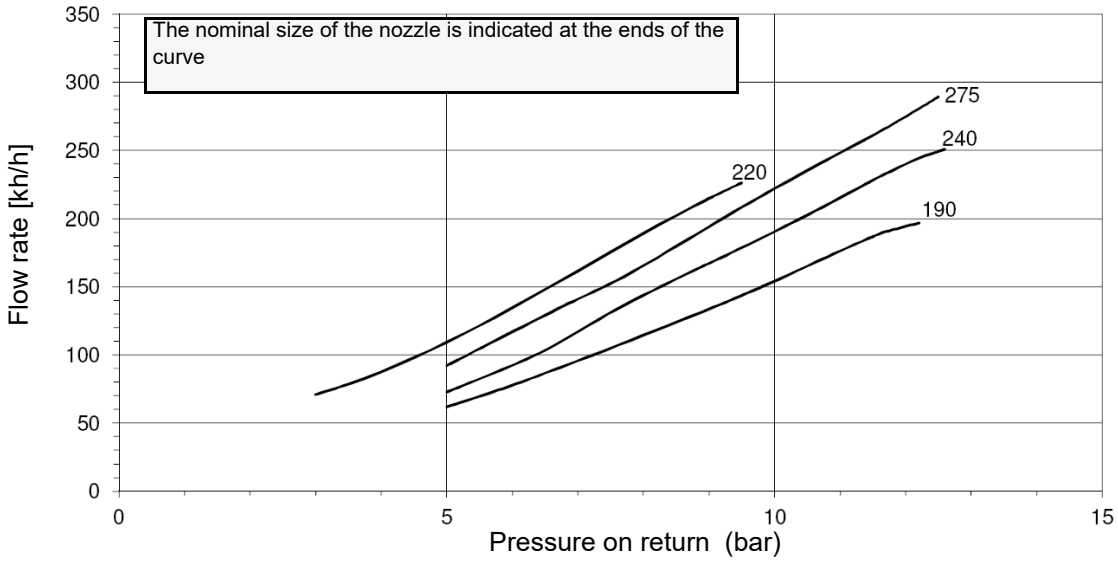

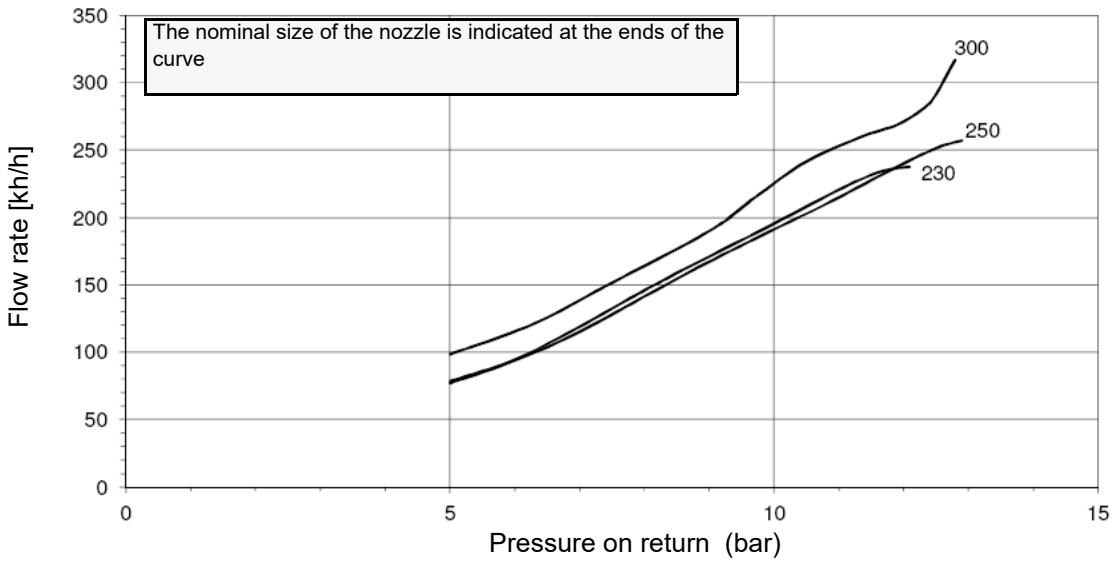

Double-stage burners

1 with the electrical panel open, prime the oil pump acting directly on the related **CP** contactor (see next picture): check the pump motor rotation and keep pressing for some seconds until the oil circuit is charged;

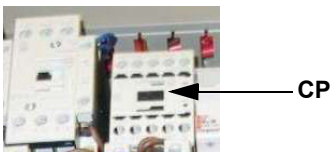

2 bleed the air from the **M** pressure gauge port by loosing the cap without removing it, then release the contactor.

Suntec J...	Suntec TA.	Suntec AJ6
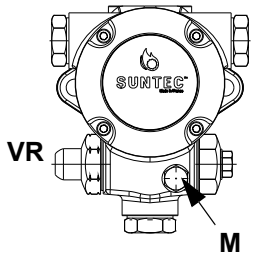	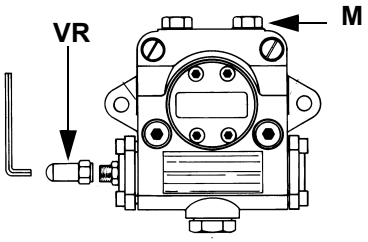	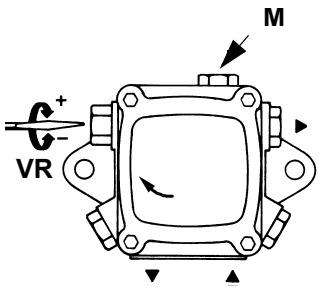

3 drive the burner to high flame stage, by means fo the thermostat **TAB** (high/low flame thermostat - see Wiring diagrams).

4 Only if necessary, adjust the supply pressure as follows;insert a pressure gauge into the port shown on figure and act on on the pump adjusting screw **VR**. Pressure values are indicated at the beginning of this paragraph.

5 the oil flow rate in the high flame stage is the maximum pressure with the return line closed

6 To adjust the **air flow rate in the high flame stage**, loose the **RA** nut and screw **VRA** as to get the desired air flow rate: moving the rod **TR** towards the air damper shaft, the air damper opens and consequently the air flow rate increases, moving it far from the shaft the air damper closes and the air flow rate decreases.

Note: once the procedure is perfomed, be sure that the blocking nut **RA** is fasten. Do not change the position of the air damper rods.

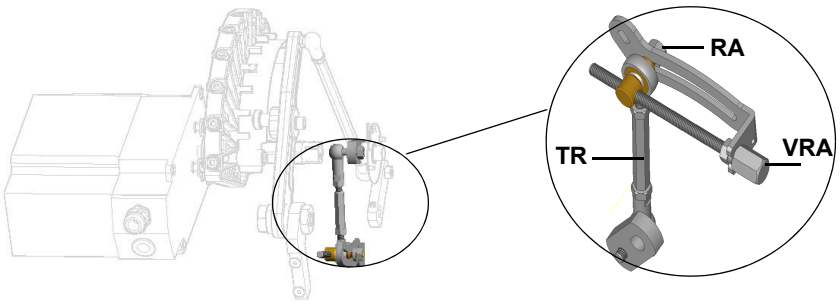

7 drive the burner to low flame by means of the **TAB** thermostat.

8 To perform the regulation, remove the cap **D** and loosen the screw **V**, by means of a screwdriver. The regulating screw **V** acts on the return pressurefrom the nozzle. Set the pressure to the minimum value of 5 bar. Read the values on the pressure gauge placed on the regulator's coupling **M**. Once the regulation is accomplished, replace cap **D**.

⚠	**Note:** After a certain operating period, the pressure can change because of some dirt on the needle's seal: remove the screw **VT** and clean.

9

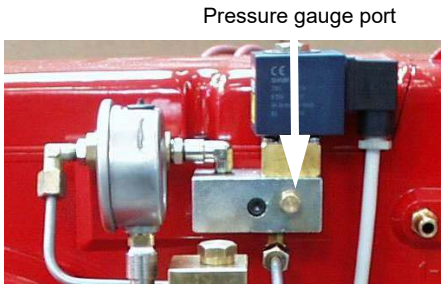

Fig. 21

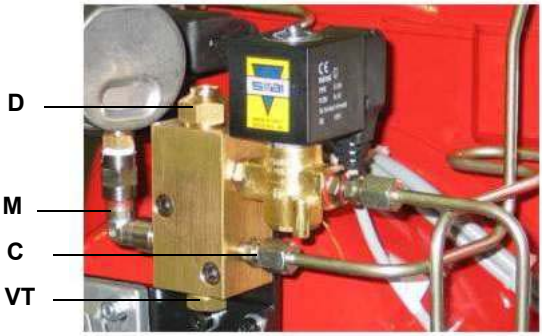

Fig. 22 - Oil manual governor

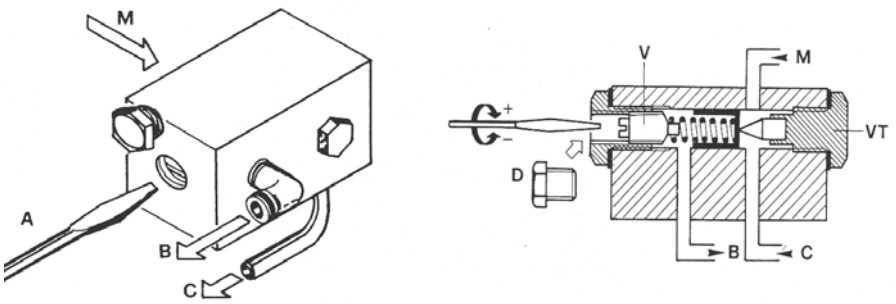

D Adjusting screw cap
V Pressure adjusting screw
M Pressure gauge port
VT Needle screw
B Return to tank
C Return from nozzle

Fig. 23

9 always checking the combustion values, adjust the low flame air flow rate by means of the actuator ST1 (Berger)/III (Siemens) cam;

10 The low flame position must never match the ignition position that is why cam MV (Berger)/IV (Siemens) must be set 20°- 30° more than the ignition position ST1 (Berger)/III (Siemens).

11 Turn the burner off and go on with the gas operation adjustment.

Berger STA6 B 3.41	Siemens SQN72
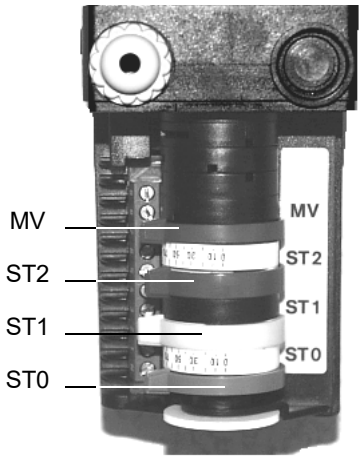	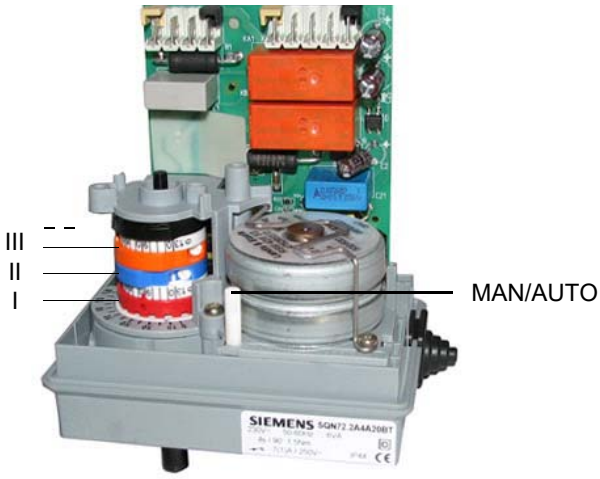
ST2 = High flame cam ST0 = Ignition position ST1 = Low flame MV = Auxiliary cam for the second valve enabling	II = High flame cam (red) II = Ignition position (blue) III = Low flame (orange)) IV = Auxiliary cam for the second valve enabling (black)

ATTENTION! Berger actuator: cams can be moved manually. Siemens actuator: set the MAN/AUTO lever to MAN to move the cams, rememeber to set it to AUTO once the adjustment is accomplished.

Maximum oil pressure switch

The oil pressure switch on the return line, checks that the pressure does not exceed a default value. This value must not be higher than the maximum acceptable pressure on the return line (this value is reported on the specification table). A pressure change on the return line could affect the combustion parameters: for this reason, the pressure switch must be set, say, at 20% over the pressure recorded during the combustion adjustment. The factory setting is 4 bar.

It is recommended to verify that the combustion parameters are within the range of acceptable values even against a pressure variation that gets close to the limit of the pressure switch.

This check should be carried out along the whole range of the burner output.

In case of inacceptable values, reduce from 20% to 15% the overpressure; later on, repeat the adjustments described above.

Minimum oil pressure switch (when provided)

The minimum oil pressure switch on the inlet line, checks that the pressure does not drop below a default value. The pressure switch must be set, say, at 10% under the pressure at the nozzle.

Oil pressure switch adjustment

Follow the below instruction, according to the pressure switch installed.

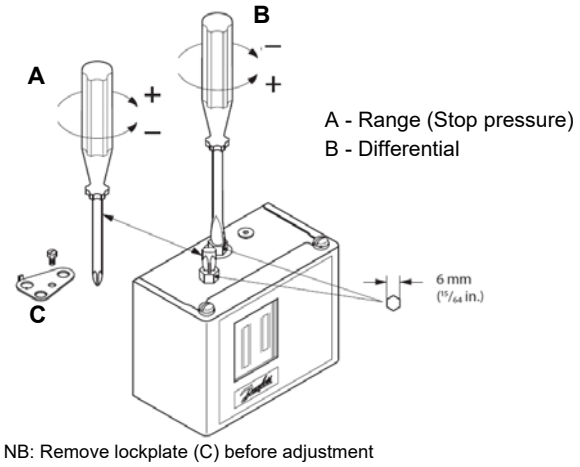 NB: Remove lockplate (C) before adjustment	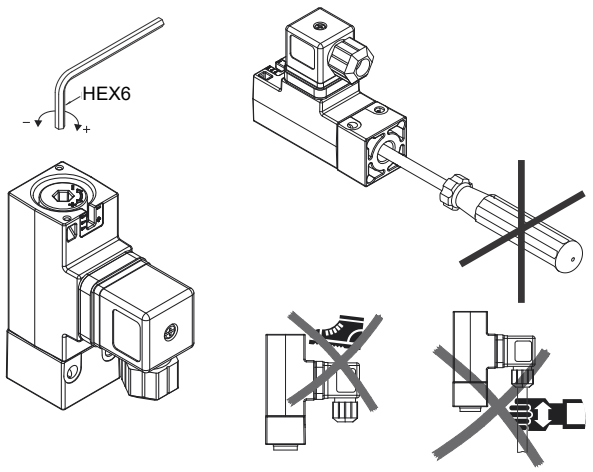
Danfoss KP..	**Trafag Picostat 9B4..**

ADJUSTMENTS FOR GAS OPERATION

Adjustments - brief description

- Check that the combustion parameters are in the suggested limits.
- .Check the flow rate measuring it on the counter or, if it was not possible, verifying the combustion head pressure by means of a differential pressure gauge.
- Adjust the combustion values in the high-flame stage.
- Set, now, the low flame output, acting on the low flame microswitch of the actuator in order to avoid the low flame output increasing too much or that the flues temperature gets too low to cause condensation in the chimney.

Double-stage burners

1 set GAS fuel by means of the burner **S1** switch (it is placed on the burner control panel)

2 check the fan motor rotation.

Only for burners provided with **Dungs Multibloc MB-DLE gas valves**:before starting the burner up, adjust the valves slow opening. To set the fast opening remove cover **T**, reverse it upside down and use it as a tool to rotate screw **VR**. Clockwise rotation reduces start flow rate, anticlockwise rotation increases it. Do not use a screwdriver on the screw **VR**! The pressure stabilizer is adjusted by operating the screw **VS** located under the cover **C**. By screwing down the pressure is increased and by unscrewing it is reduced.

Note: the screw **VSB** must be removed only in case of replacemente of the coil.

Only for burners provided with **Dungs Multibloc MB-DLE gas valves**:before starting the burner up, adjust the valves slow opening. To set the fast opening remove cover **T**, reverse it upside down and use it as a tool to rotate screw **VR**. Clockwise rotation reduces start flow rate, anticlockwise rotation increases it. Do not use a screwdriver on the screw **VR**! The pressure stabilizer is adjusted by operating the screw **VS** located under the cover **C**. By screwing down the pressure is increased and by unscrewing it is reduced.

Note: the screw **VSB** must be removed only in case of replacemente of the coil.

3 Start the burner up by means of the thermostat series and wait until the pre-purge time comes to an end and that the burner starts up;

4 drive the burner to high flame stage, by means fo the thermostat **TAB**.

5 do not change the air flow rate adjustment set in the light oil operation (see previous paragraph);

6 acting on the pressure stabiliser of the valves group, adjust the **gas flow rate in the high flame stage** as to meet the values requested by the boiler/utilisation:

-**Multibloc MB-DLE:**The pressure governor is adjusted by operating the screw **VS** located under the cover **C**. By screwing down the pressure is increased and by unscrewing it is reduced. The valve is adjusted by means of the **RP** regulator after slackening the locking screw **VB** by a number of turns. By unscrewing the regulator **RP** the valve opens, screwing the valve closes.

- Siemens VGD valves group: remove cap **T** and act on the **VR** adjusting screw to increase or decrease the pressure and consequently the gas rate; screwind **VR** the rate increases, unscrewing it decreases (see next figure).

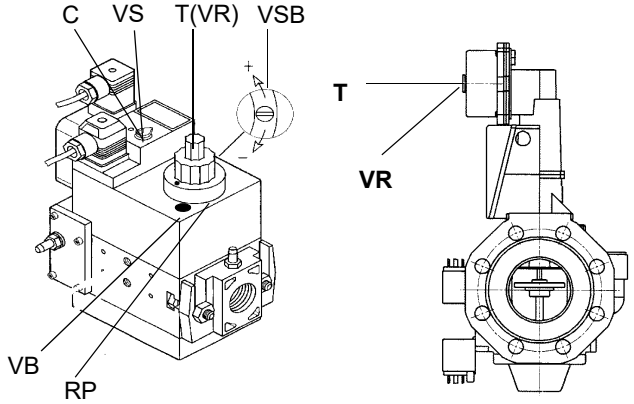

Dungs Multibloc MB-DLE **Siemens VGD..**

7 If necessary, adjust the combustion head position (see the dedicated paragraph)..

Attention! if it is necessary to change the head position, repeat the air and gas adjustments described above.

8 drive the burner to the low flame stage by means of the **TAB** thermostat;

In order to change the gas flow rate slacken the nuts **DB** (Fig. 24) and adjust the opening angle of the gas butterfly valve by rotating the rod **TG** (clockwise rotation increases gas flow, anticlockwise rotation decreases it). The mark on the butterfly valve shaft shows the measured opening degree of the valve regardingthe horizontal axis (Fig. 24).**NOTE:** At the end of settings, make sure the locking screws **RA** and **DB** are fully tightened.

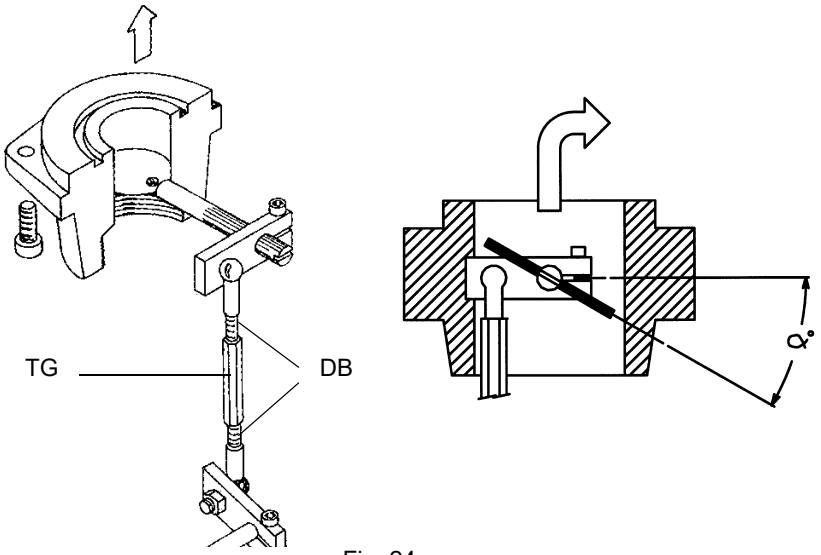

Fig. 24

9 Now adjust the pressure switches .

10 In the case that the flue gas temperature is not the one required, go back to the light oil operation and adjust the oil flow rate as to meet the flue gas temperature values reqested. Consequently adjust the air always observing the combustion analysis. Then go back to the gas operation and repeat only the gas adjustments (because the air rate has already been set in the light oil operation); always check the combustion values.

11 Turn the burner off and then start it up again. If the adjustment is not correct, repeat the previous steps.

Setting air and gas pressure switches

The **air pressure switch** locks the control box if the air pressure is not the one requested. If it happens, unlock the burner by means of the control box unlock pushbutton, placed on the burner control panel.

The **gas pressure switches** check the pressure to avoid the burner operate when the pressure value is not in the requested pressure range.

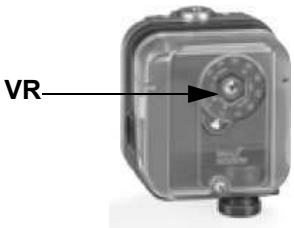

Calibration of low gas pressure switch

As for the gas pressure switch calibration, proceed as follows:

- Be sure that the filter is clean.
- Remove the transparent plastic cap.
- While the burner is operating at the maximum output, test the gas pressure on the pressure port of the minimum gas pressure switch.
- Slowly close the manual cutoff valve (placed upstream the pressure switch, see gas train installation diagram), until the detected pressure is reduced by 50%. Pay attention that the CO value in the flue gas does not increase: if the CO values are higher than the limits laid down by law, slowly open the cutoff valve as to get values lower than these limits.
- Check that the burner is operating correctly.
- Clockwise turn the pressure switch adjusting ring nut (as to increase the pressure value) until the burner stops.
- Slowly fully open the manual cutoff valve.
- Refit the transparent plastic cover on the pressure switch.

Adjusting the maximum gas pressure switch (when provided)

To calibrate the maximum pressure switch, proceed as follows according to its mounting position:

1 remove the pressure switch plastic cover;

2 if the maximum pressure switch is mounted upstreaam the gas valves: measure the gas pressure in the network, when flame is off; by means of the adjusting ring nut **VR**, set the value read, increased by the 30%.

3 if the maximum pressure switch is mounted downstream the “gas governor-gas valves” group and upstream the butterfly valve: light the burner, adjust it according to the procedure in the previous paragrph. Then, measure the gas pressure at the operating flow rate, downstream the “gas governor-gas valves” group and upstream the butterfly valve; by means of the adjusting ring nut **VR**, set the value read on step 2, increased by the 30%;

4 replace the plastic cover.

Calibration of air pressure switch

To calibrate the air pressure switch, proceed as follows:

- Remove the transparent plastic cap.
- Once air and fuel setting have been accomplished, startup the burner.
- During the pre-purge phase o the operation, turn slowly the adjusting ring nut **VR** in the clockwise direction (to increase the adjusting pressure) until the burner lockout, then read the value on the pressure switch scale and set it to a value reduced by 15%.
- Repeat the ignition cycle of the burner and check it runs properly.
- Refit the transparent plastic cover on the pressure switch.

Adjusting the combustion head

Attention! if it is necessary to change the head position, repeat the air and fuel adjustments described above.

The burner is factory-adjusted with the combustion head in the "MAX" position, accordingly to the maximum power. To operate the burner at a lower power, progressively shift back the combustion head, towards the "MIN" position, screwing the screw **VRT**. The ID index shows how much the combustion head moved.

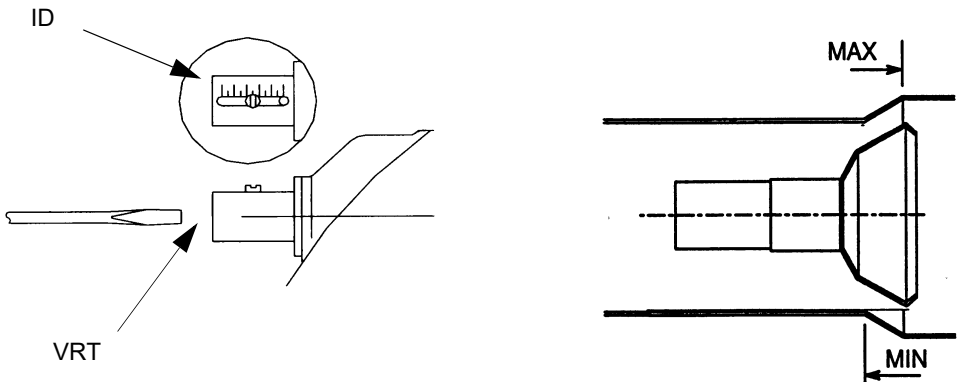

CAUTION: perform these adjustments once the burner is turned off and cooled.

WARNING: please read carefully the paragraph “Fuel” at the beginning of this manual.

(HP72) Center head holes gas flow regulation (LPG burners)

To adjust the gas flow, partially close the holes, as follows:

1 loosen the three **V** screws that fix the adjusting plate **D**;
2 insert a screwdriver on the adjusting plate notches and let it move CW/CCW as to open/close the holes;
3 once the adjustmet is performed, fasten the **V** screws.

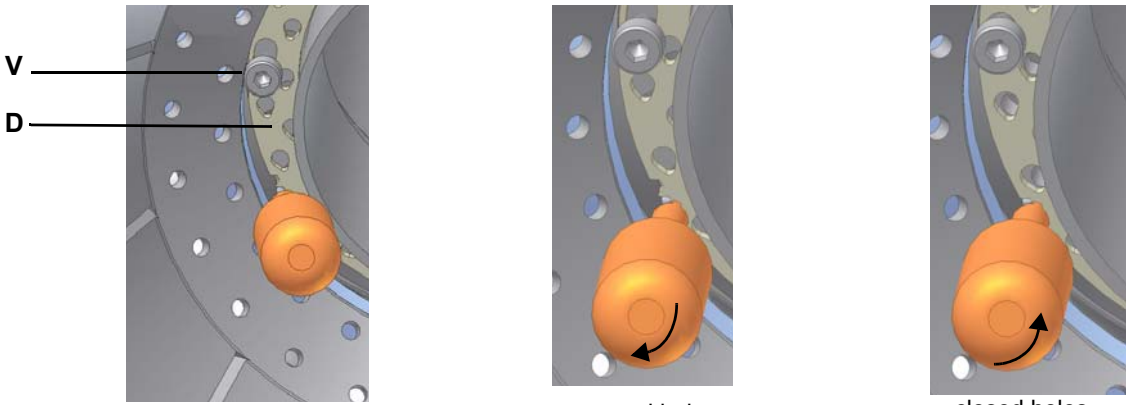

opened holes

closed holes

The adjusting plate correct position must be regulated in the plant during the commissioning.
The factory setting depends on the type of fuel for which the burner is designed:

- For LPG burners, plate holes are opened about 1.4mm

PART IV: MAINTENANCE

WARNING: ALL OPERATIONS ON THE BURNER MUST BE CARRIED OUT WITH THE MAINS DISCONNECTED AND THE FUEL MANAUL CUTOFF VALVES CLOSED!

ATTENTION: READ CAREFULLY THE "WARNINGS" CHAPTER AT THE BEGINNIG OF THIS MANUAL.

At least once a year carry out the maintenance operations listed below. In the case of seasonal servicing, it is recommended to carry out the maintenance at the end of each heating season; in the case of continuous operation the maintenance is carried out every 6 months.

ROUTINE MAINTENANCE

- Check that the gas meter is not moving when the burner is off. In case it is rotating, look for possible leaks.
- Check that all parts in contact with combustive air (air box, protection mesh and Archimedean screw) are clean and free from any obstruction that might impede free afflux. Clean it with compressed air if available and/or a dry brush or cloths. Eventually wash it with non corrosive detergents.
- Check of blast tube; it must be substituted in case of obvious cracks or anomalous holes. Slight deformations that do not affect combustion may be tolerated
- Check and clean the cartdrige of the fuel filter, replace it if necessary;
- carefully check the fuel flexible hoses for leaks;
- check and clean the filter on the fuel pump: bilter must be thoroughly cleaned at least once in a season to ensure correct working of the fuel unit. To remove the filter, unscrew the four screws on the cover. When reassemble, make sure that the filter is mounted with the feet toward the pump body. If the gasket between cover and pump housing should be damaged, it must be replaced;
- remove, check and clean the combustion head;
- check the ignition electrodes and their ceramic insulators, clean, adjust and replace if necessary;
- remove and clean the oil nozzles (IMPORTANT: do not clean the nozzles using metallic or sharp utensils, use only solvents or steam); at the end of maintenance operations, refit the burner, turn it on and check the combustion. If in doubt, replace the defective nozzle/s. In case of intensive use of the burner, the nozzles must be replaced at the end of the working season;
- examine and clean the detection electrode/photoelement (according to the burner models), replace it if necessary, in case of doubt, check the detection circuit, after the burner start-up;
- clean and grease levers and rotating parts.
- At least every 2 months, or more often if needed, clean the room where the burner is installed.
- Avoid leaving installations, papers, nylon bags, etc., inside the room. They could be sucked by the burner and cause malfunctioning.
- Check that the room's vents are free from obstructions.

ATTENTIONwhen servicing, if it was necessary to disassemble the gas train parts, remember to execute the gas proving test, once the gas train is reassembled, according to the procedure imposed by the law in force.

Gas filter maintenance

ATTENTION: Before opening the filter, close the manual cutoff valve downstream the filter and bleed the gas; check that inside the filter there is no pressurised gas.

To clean or remove the filter, proceed as follows:

1 remove the cap unscrewing the fixing screws (A);
2 remove the filtering cartridge (B), clean it using water and soap, blow it with compressed air(or replace it, if necessary)
3 replace the cartridge in its proper position taking care to place it inbetween the guides as not to hamper the cap replacement;
4 be sure to replace the “O” ring into its place (C) and replace the cover fastening by the proper screws (A).

A

B

C

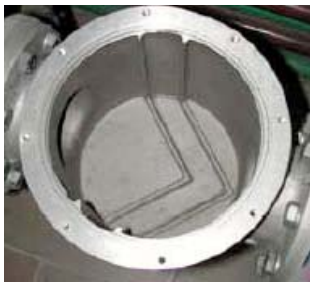

Removing the filter in the MULTIBLOC DUNGS MB-DLE 405..412

- Check the filter at least once a year!
- Change the filter if the pressure difference between pressure connection 1 and 3 (Fig. 25-Fig. 26)is $\Delta p > 10$ mbar.
- Change the filter if the pressure difference between pressure connection 1 and 3 (Fig. 25-Fig. 26) is twice as high compared to the last check.

You can change the filter without removing the fitting.

1 Interrupt the gas supply closing the on-off valve.
2 Remove screws 1 ÷ 4 using the Allen key n. 3 and remove filter cover 5 in Fig. 27.
3 Remove the filter 6 and replace with a new one.
4 Replace filter cover 5 and tighten screws 1 ÷ 4 without using any force and fasten.
5 Perform leakage and functional test, $p_{max.}$ = 360 mbar.
6 Pay attention that dirt does not fall inside the valve.

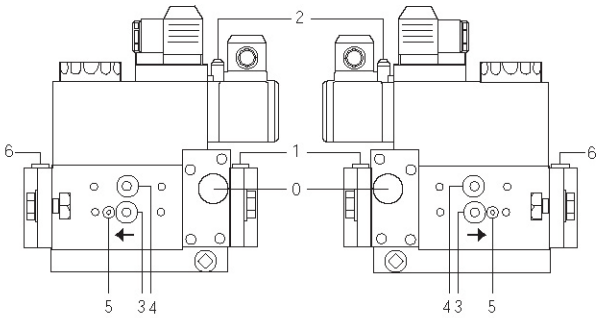

Fig. 25

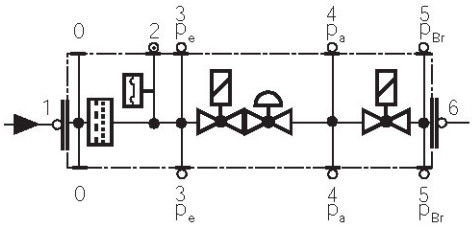

Fig. 26

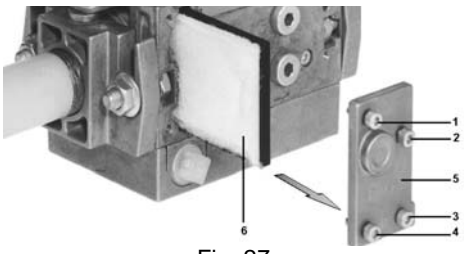

Fig. 27

Removing the filter in the MULTIBLOC DUNGS MB-DLE 415 - 420 B01 1” 1/2 - 2”

- Check the filter at least once a year!
- Change the filter if the pressure difference between pressure connection 1 and 2 (Fig. 28-Fig. 29) Δp> 10 mbar.
- Change the filter if the pressure difference between pressure connection 1 and 2 (Fig. 28-Fig. 29) is twice as high compared to the last check.

You can change the filter without removing the fitting.

1 Interrupt the gas supply closing the on-off valve.
2 Remove screws 1 ÷ 6 (Fig. 30).
3 Change filter insert.
4 Re-insert filter housing, screw in screws 1 ÷ 6 without using any force and fasten.
5 Perform leakage and functional test, $p_{max.}$ = 360 mbar.
6 Pay attention that dirt does not fall inside the valve.

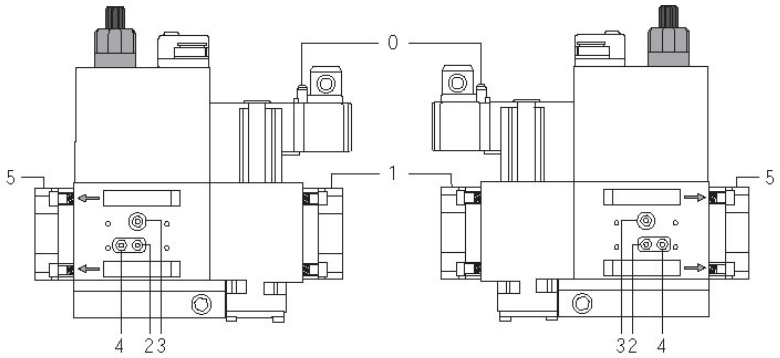

Fig. 28

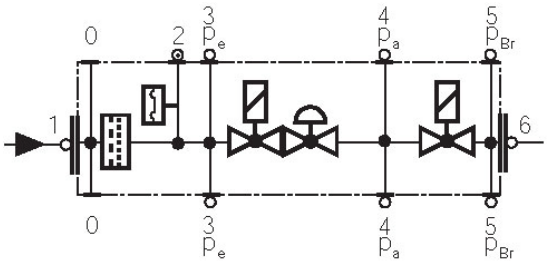

Fig. 29

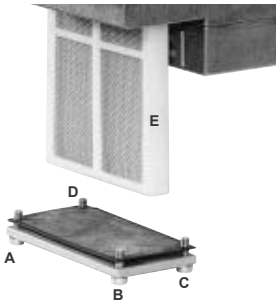

Fig. 30

Replacing the spring in the gas valve group

To replace the spring in the gas valve group,proceed as follows:

1 Carefully twist the protection cap 1 and the O-ring 2.
2 remove the “set value” spring 3 from housing 4.
3 Replace spring 3.
4 Carefully insert the new “set value” spring. Pay attention to mount properly. First insert the spring part with smaller diameter in the housing.
5 Place O-ring 2 in protective cap 1. Screw in the protective cap with the O-ring in it.
6 Stick the adhesive label for spring identification on the type plate.

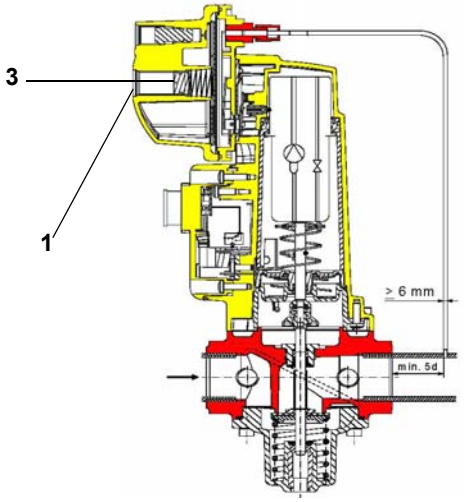

SKP Siemens actuator

Light oil filter maintenance

For correct and proper servicing, proceed as follows:

1 cutoff the required pipe section;
2 unscrew the filter cup;
3 remove the filtering cartridge, wash it with gasoline; if necessary, replace it; check the tightening O-rings and replace them if necessary;
4 replace the cup and restore the pipe line.

Removing the combustion head

- Remove the top H.
- Slide the UV detector from its housing.
- Unscrew the two screws **S** holding in position the washer and then unscrew **VRT** to free the threaded rod **AR**.
- Slacken the screws **V** holding the gas manifold **C**, slacken the connectors **B** and remove the complete assembly as shown in Fig. 31.

Note: for the subsequent assembly carry out the above described operations in the reverse order, checking the correct position of the OR ring.

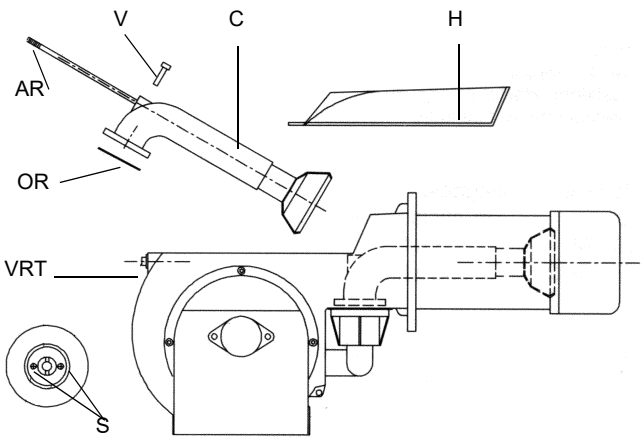

Fig. 31

Key

V Fixing screws group C
C Gas manifold
B Connecting nut light oil pipes
G Fan
VR Head regulating screw

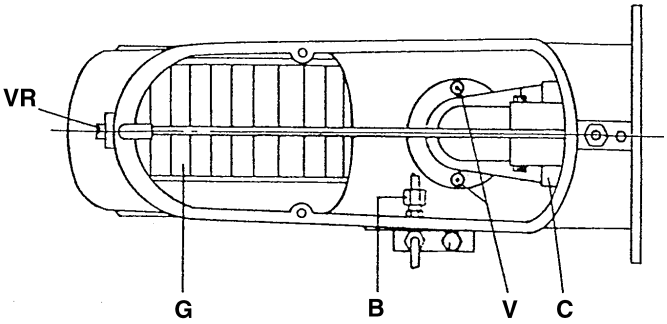

Fig. 32

Electrodes Adjustment (LPG burners)

Important Note: Check the ignition and detection electrodes after removing/adjusting the combustion head.

ATTENTION: avoid the ignition and detection electrodes to contact metallic parts (blast tube, head, etc.), otherwise the boiler's operation would be compromised. Check the electrodes position after any intervention on the combustion head.

Adjust the electrodes position, according to the quotes shown othe next picture.

HP60 LG..

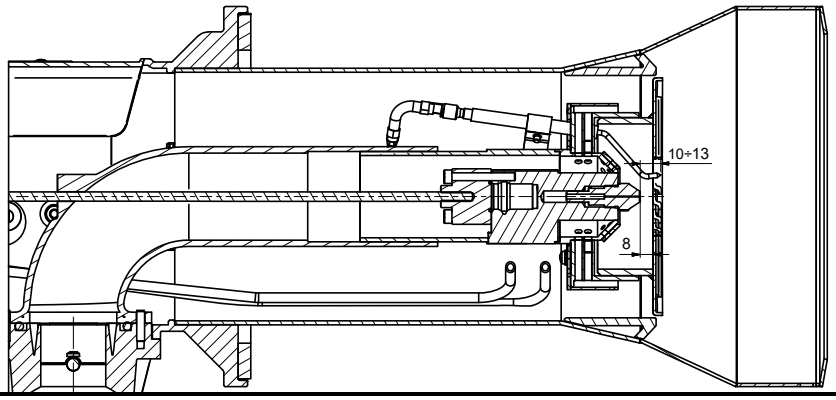

HP65 LG..

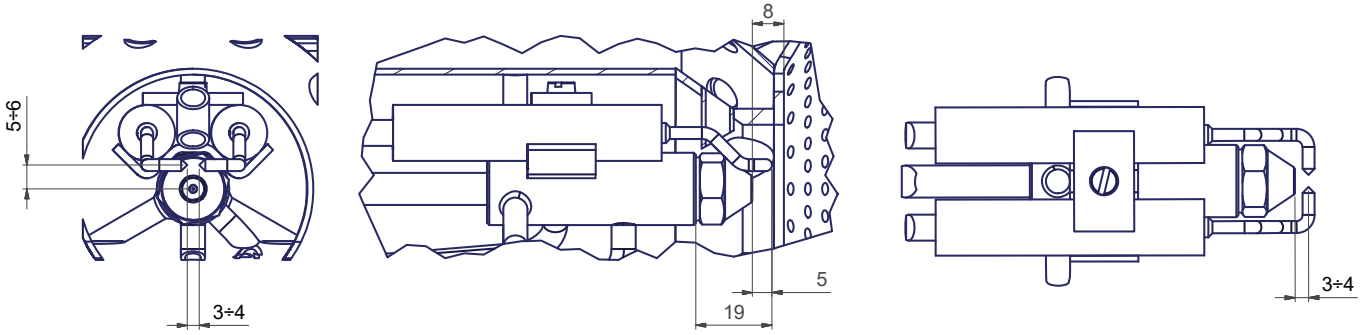

HP72 LG..

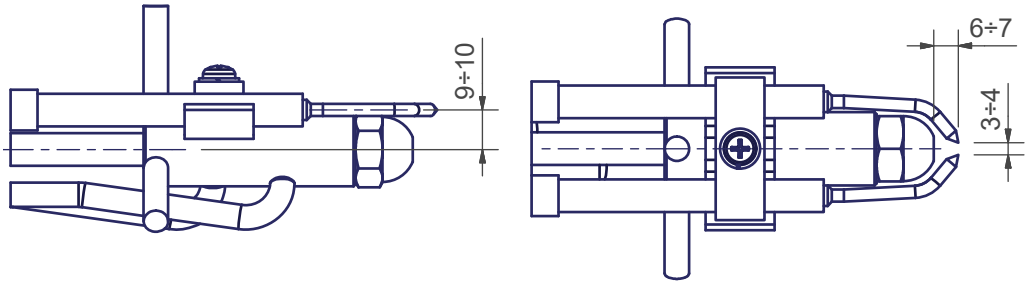

Electrodes Adjustment (natural gas burners)

Important Note: Check the ignition and detection electrodes after removing/adjusting the combustion head.

ATTENTION: avoid the ignition and detection electrodes to contact metallic parts (blast tube, head, etc.), otherwise the boiler's operation would be compromised. Check the electrodes position after any intervention on the combustion head.

Adjust the electrodes position, according to the quotes shown othe next picture.

HP60 MG.. - HP65 MG..

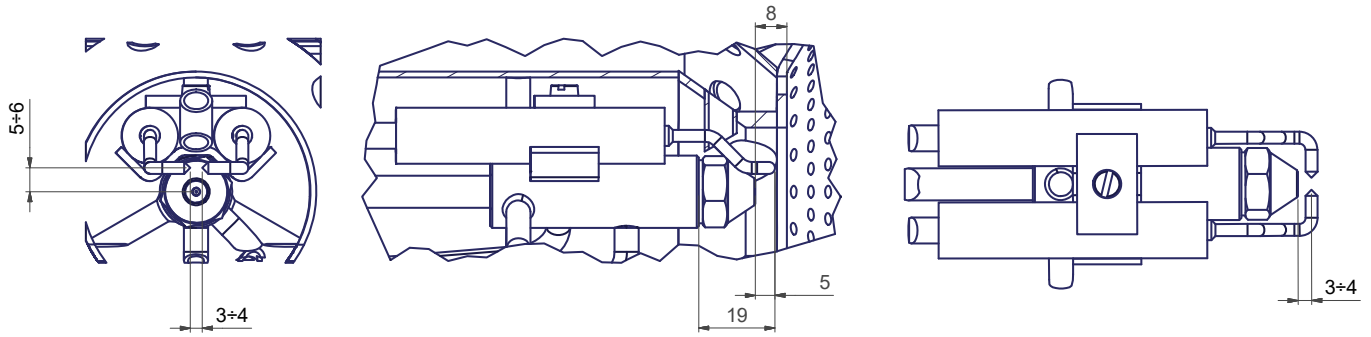

HP72 MG..

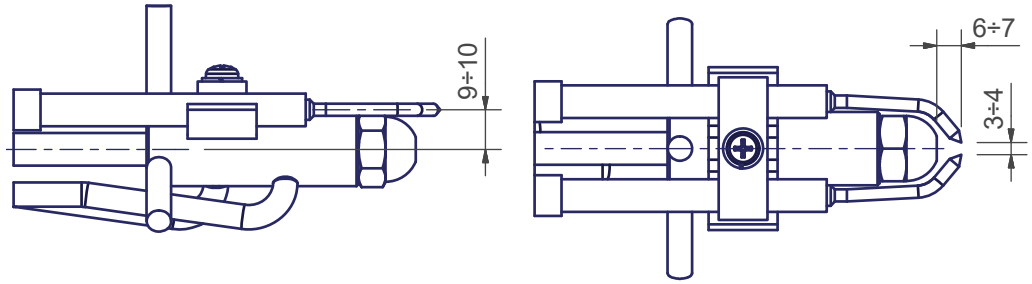

Cleaning/replacing the electrodes

ATTENTION: avoid the electrodes to get in touch with metallic parts (blast tube, head, etc.), otherwise the boiler operation would be compromised. Check the electrodes position after any intervention on the combustion head.

To clean/replace the electrodes, proceed as follows:

1 remove the combustion head as described in the previous paragraph;

2 remove the electrodes ass.y and clean them;

in order to replace the electrodes, unscrew the **VE** fixing screws and remove them: place the new electrodes being careful to observe the measures in the previous paragraph; reassemble the electrodes and the combustion head following the reversed procedure.

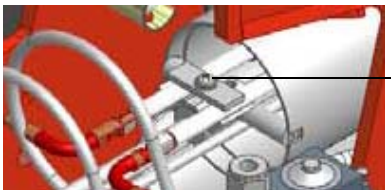

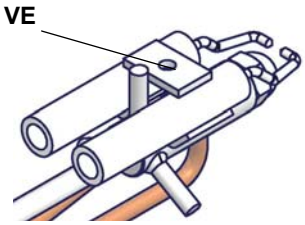

Checking the detection current

To check the detection signal follow the scheme in the picture below. If the signal is less than the value indicated, check the position of the detection electrode or detector, the electrical contacts and, if necessary, replace the electrode or the detector.

Control box	Minimum detection signal
Siemens LME21-22	200 µA

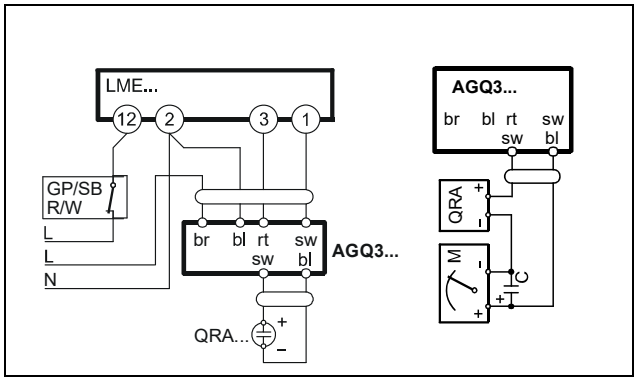

Cleaning and replacing the detection photocell

To clean/replace the detection photocell, proceed as follows:

1 Disconnect the system from the electrical power supply.
2 Shut off the fuel supply;
3 remove the photocell from its slot (see next figure);
4 clean the bulbe if dirty, taking care not to touch it with bare hands;
5 if necessary, replace the bulb;
6 replace the photocell into its slot.

Seasonal stop

To stop the burner in the seasonal stop, proceed as follows:

1 turn the burner main switch to 0 (Off position)
2 disconnect the power mains
3 close the fuel valve of the supply line

Burner disposal

In case of disposal, follow the instructions according to the laws in force in your country about the “Disposal of materials”.

WIRING DIAGRAMS

Refer to the attached wiring diagrams.

WARNING

1 - Electrical supply 230V / 400V 50Hz 3N a.c.

2 - Do not reverse phase with neutral

3 - Ensure burner is properly earthed

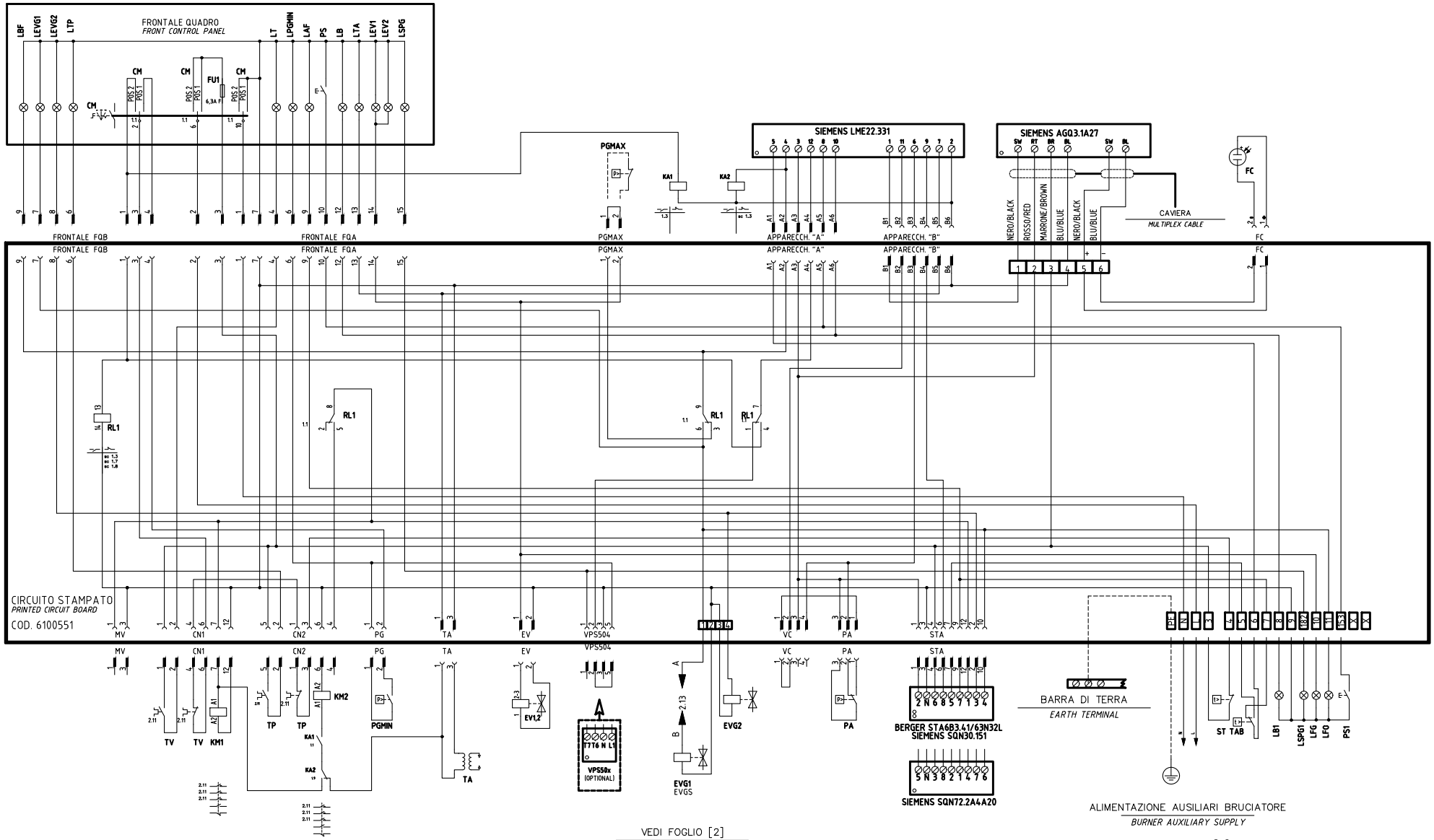

CAMME SERVOCOMANDO
ACTUATOR CAMS
STA6B3.41/63N32L

ST2	ALTA FIAMMA *HIGH FLAME*
ST0	SOSTA *STAND-BY*
ST1	BASSA FIAMMA *LOW FLAME*
MV	APERTURA EVG2 *OPEN EVG2*

CAMME SERVOCOMANDO (ALTERNATIVO)
ACTUATOR CAMS (ALTERNATIVE)
SQN30.151

I	ALTA FIAMMA *HIGH FLAME*
II	SOSTA *STAND-BY*
III	BASSA FIAMMA *LOW FLAME*
V	APERTURA EVG2 *OPEN EVG2*

CAMME SERVOCOMANDO (ALTERNATIVO)
ACTUATOR CAMS (ALTERNATIVE)
SQN72.2A4A20

I (ROSSO) *I (RED)*	ALTA FIAMMA *HIGH FLAME*
II (BLU) *II (BLUE)*	SOSTA *STAND-BY*
III (ARANCIO) *III (ORANGE)*	BASSA FIAMMA *LOW FLAME*
IV (NERO) *IV (BLACK)*	APERTURA EVG2 *OPEN EVG2*

Data 10/12/2007		PREC.	FOGLIO
Revisione 04		/	1
Dis. N. 18 – 0119		SEGUE	TOTALE
		2	2

SIGLA/ITEM	FUNZIONE	FUNCTION
BERGER STA6B3.41/63N32L	SERVOCOMANDO SERRANDA ARIA	AIR DAMPER ACTUATOR
CM	SELETTORE MANUALE COMBUSTIBILE 1) GAS 0) OFF 2) GASOLIO	COMBUSTIBLE SELECTOR 1)GAS 0)OFF 2)LIGHT OIL
EV1,2	ELETTROVALVOLE GAS (O GRUPPO VALVOLE)	GAS ELECTRO-VALVES (OR VALVES GROUP)
EVG1 / EVGS	ELETTROVALVOLE GASOLIO	LIGHT OIL ELECTRO VALVE
EVG2	ELETTROVALVOLA GASOLIO	LIGHT OIL SOLENOID VALVE
F2	FUSIBILI LINEA MOTORE VENTILATORE	FAN MOTOR LINE FUSES
F3	FUSIBILE DI LINEA	LINE FUSE
F4	FUSIBILI LINEA POMPA	PUMP LINE FUSES
FC	SONDA UV RILEVAZIONE FIAMMA	UV FLAME DETECTOR
FU1	FUSIBILE DI LINEA	LINE FUSE
IG	INTERRUTTORE GENERALE	MAINS SWITCH
KA1	RELE' AUSILIARIO	AUXILIARY RELAY
KA2	RELE' AUSILIARIO	AUXILIARY RELAY
KM1	CONTATTORE MOTORE VENTILATORE	FAN MOTOR CONTACTOR
KM2	CONTATTORE MOTORE POMPA GASOLIO	LIGHT OIL PUMP MOTOR CONTACTOR
LAF	LAMPADA SEGNALAZIONE ALTA FIAMMA BRUCIATORE	BURNER IN HIGH FLAME INDICATOR LIGHT
LB	LAMPADA SEGNALAZIONE BLOCCO BRUCIATORE	INDICATOR LIGHT FOR BURNER LOCK-OUT
LB1	LAMPADA SEGNALAZIONE BLOCCO BRUCIATORE	INDICATOR LIGHT FOR BURNER LOCK-OUT
LBF	LAMPADA SEGNALAZIONE BASSA FIAMMA BRUCIATORE	BURNER IN LOW FLAME INDICATOR LIGHT
LEV1	LAMPADA SEGNALAZIONE APERTURA [EV1]	INDICATOR LIGHT FOR OPENING OF ELECTRO-VALVE [EV1]
LEV2	LAMPADA SEGNALAZIONE APERTURA [EV2]	INDICATOR LIGHT FOR OPENING OF ELECTRO-VALVE [EV2]
LEVG1	LAMPADA SEGNALAZIONE APERTURA [EVG1]	INDICATOR LIGHT FOR OPENING OF ELECTRO-VALVE [EVG1]
LEVG2	LAMPADA SEGNALAZIONE APERTURA [EVG2]	INDICATOR LIGHT FOR OPENING OF ELECTRO-VALVE [EVG2]
LFG	LAMPADA SEGNALAZIONE FUNZIONAMENTO BRUCIATORE A GAS	BURNER GAS OPERATION INDICATOR LIGHT
LFO	LAMPADA SEGNALAZIONE FUNZIONAMENTO BRUCIATORE A GASOLIO	BURNER LIGHT OIL OPERATION INDICATOR LIGHT

SIGLA/ITEM	FUNZIONE	FUNCTION
LPGMIN	LAMPADA SEGNALAZIONE PRESENZA GAS IN RETE	INDICATOR LIGHT FOR PRESENCE OF GAS IN THE NETWORK
LSPG	LAMPADA SEGNALAZIONE BLOCCO CONTROLLO TENUTA VALVOLE	INDICATOR LIGHT FOR LEAKAGE OF VALVES
LSPG1	LAMPADA SEGNALAZIONE BLOCCO CONTROLLO TENUTA VALVOLE	INDICATOR LIGHT FOR LEAKAGE OF VALVES
LT	LAMPADA SEGNALAZIONE BLOCCO TERMICO MOTORE VENTILATORE	INDICATOR LIGHT FOR FAN MOTOR OVERLOAD THERMAL CUTOUT
LTA	LAMPADA SEGNALAZIONE TRASFORMATORE DI ACCENSIONE	IGNITION TRANSFORMER INDICATOR LIGHT
LTP	LAMPADA SEGNALAZIONE BLOCCO TERMICO MOTORE POMPA	INDICATOR LIGHT FOR PUMP MOTOR OVERLOAD THERMAL CUTOUT
MP	MOTORE POMPA GASOLIO	LIGHT OIL PUMP MOTOR
MV	MOTORE VENTILATORE	FAN MOTOR
PA	PRESSOSTATO ARIA	AIR PRESSURE SWITCH
PGMAX	PRESSOSTATO GAS DI MASSIMA PRESSIONE (OPTIONAL)	MAXIMUM PRESSURE GAS SWITCH (OPTIONAL)
PGMIN	PRESSOSTATO GAS DI MINIMA PRESSIONE	MINIMUM GAS PRESSURE SWITCH
POMAX	PRESSOSTATO DI MASSIMA PRESSIONE OLIO (OPTIONAL)	MAXIMUM OIL PRESSURE SWITCH (OTIONAL)
PS	PULSANTE SBLOCCO FIAMMA	LOCK-OUT RESET BUTTON
PS1	PULSANTE SBLOCCO FIAMMA	LOCK-OUT RESET BUTTON
RL1	RELE' AUSILIARIO	AUXILIARY RELAY
SIEMENS AGQ3.1A27	ADATTATORE PER SONDA UV RILEVAZIONE FIAMMA	ADAPTER FOR UV FLAME DETECTOR
SIEMENS LME22.331	APPARECCHIATURA CONTROLLO FIAMMA	CONTROL BOX
SIEMENS SQN30.151	SERVOCOMANDO SERRANDA ARIA (ALTERNATIVO)	AIR DAMPER ACTUATOR (ALTERNATIVE)
SIEMENS SQN72.2A4A20	SERVOCOMANDO SERRANDA ARIA (ALTERNATIVO)	AIR DAMPER ACTUATOR (ALTERNATIVE)
ST	SERIE TERMOSTATI/PRESSOSTATI	SERIES OF THERMOSTATS OR PRESSURE SWITCHES
TA	TRASFORMATORE DI ACCENSIONE	IGNITION TRANSFORMER
TAB	TERMOSTATO/PRESSOSTATO ALTA-BASSA FIAMMA	HIGH-LOW THERMOSTAT/PRESSURE SWITCHES
TP	TERMICO MOTORE POMPA GASOLIO	LIGHT OIL PUMP MOTOR THERMAL
TV	TERMICO MOTORE VENTILATORE	FAN MOTOR THERMAL
VPS50x	CONTROLLO DI TENUTA VALVOLE GAS (OPTIONAL)	GAS PROVING SYSTEM (OPTIONAL)

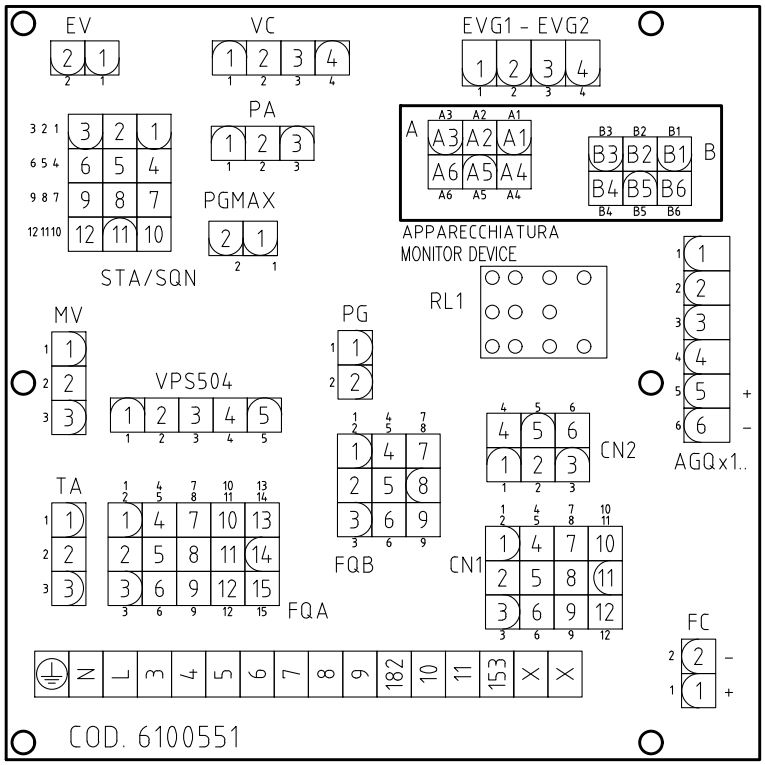

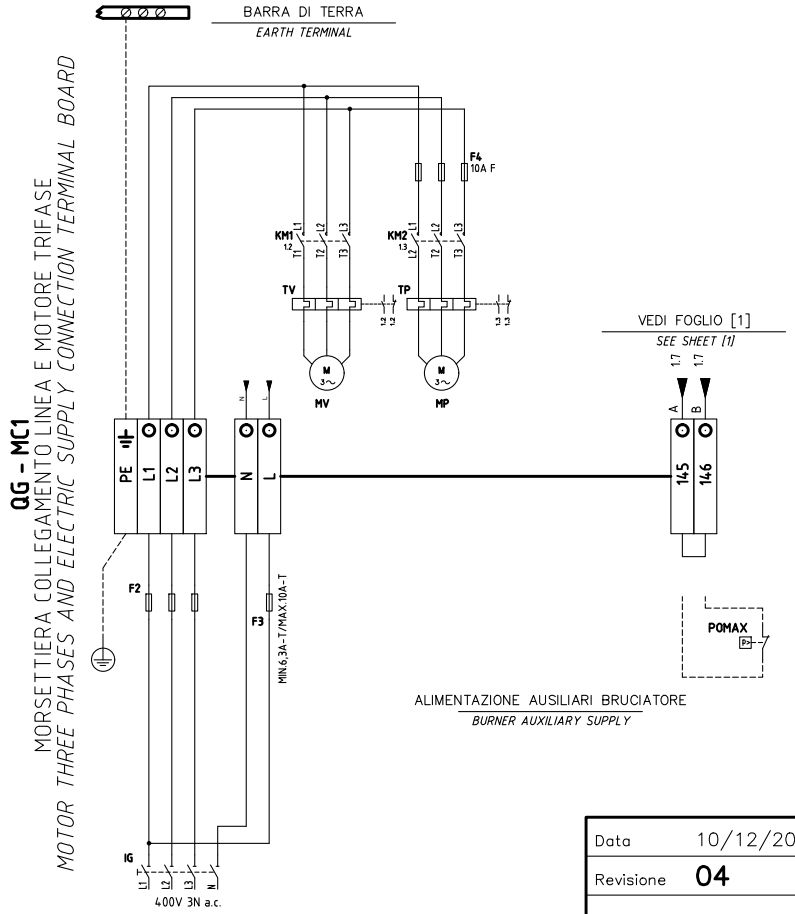

Data	10/12/2007	PREC.	FOGLIO
Revisione	04	1	2
Dis. N.	18 – 0119	SEGUE /	TOTALE 2

TROUBLESHOOTNG GUIDE - Light oil operation

BURNER DOESN'T LIGHT	* No electric power supply	* Wait for electric power supply is back
	* Main switch open	* Close the switch
	* Thermostats open	* Check set points and thermostat connections
	* Bad thermostat set point or broken thermostat	* Set or replace the thermostat
	* No gas pressure	* Restore gas pressure
	* Safety devices (manually operated safety thermostat or pressure switch, and so on ...) open	* Restore safety devices; wait that boiler reaches its temperature then check safety device functionality.
	* Broken fuses	* Replace fuses. Check current absorption
	* Fan thermal contacts open (only three phases)	* Reset contacts and check current absorption
	* Burner control locked out	* Reset and check its functionality
	* Burner control damaged	* Replace burner control
BURNER LOCKS OUT WITH FLAME PRESENCE	* Flame detector dirty or damaged	* Clean or replace flame detector
	* Burner control damaged	* Replace burner control
	* Smoking flame	* Reset combustion air flow rate * Check the nozzle and, if necessary, replace it * Check cleanness of combustion head * Check chimney suction * Check boiler cleanness
	* Combustion head dirty	* Clean combustion head
BURNER LOCKS OUT WITHOUT ANY FUEL FLOW RATE	* No fuel	* Fill the tank
	* Pump joint broken	* Check pump pressure
	* Pump damaged	* Check pump suction
		* Replace pump
	* Compressed air (or steam) too high	* Released compressed air (or steam) pressure
	* Oil metering valve not open far enough	* Check air pressure
		* Check servomotor position
	* Oil valve not energized	* Check wiring path or replace valve
	* Fan motor not efficient	* Adjust or replace the motor
	* Fan or pump motor runs in the wrong way	* Change rotation
	* Obstructed nozzle	* Clean or replace the nozzle
	* Check valve in the tank locked or leaking	* Clean or replace the valve
	* Oil filter dirty * Pump filter dirty	* Clean filter
	* Solenoid valve dirty or broken	* Clean or replace solenoid valve
BURNER LOCKS OUT WITH FUEL FLOW RATE (NO FLAME)	* Oil pressure too low	* Reset oil pressure
	* Nozzle dirty or damaged	* Clean or replace nozzle
	* Water in the tank	* Take off all the water from the tank
		* Clean all filters
	* Suction too high	* Check suction before pump. If necessary clean filters.
	* Ignition electrodes grounded because dirty or damaged	* Clean or replace electrodes
	* Ignition electrodes badly set	* Check electrodes position referring to instruction manual
	* Cables damaged	* Replace cables
	* Bad position of cables in the ignition transformer or into the electrodes	* Improve the installation
	* Ignition transformer damaged	* Replace the transformer
PUMP TOO NOISY	* Suction too high (over 0,35 bar) (dirty filters, check valve in the tank locked, and so on ...)	* Clean filters * Replace check valve in the tank
	* Flexible hoses damaged	* Replace flexible hoses
	* Air infiltration in the pipes	* Take off all infiltration
	* Pipe too long or too narrow	* Increase line size
BURNER RUMBLES WHEN MODULA-TING TO HIGH FIRE	* Burner is too lean	* Adjust air-oil ratio
	* Drawer assembly not set properly	* Check drawer position
	* Oil may be too hot	* Check oil temperature
	* Flame is blowing off head	* Check head position
CARBON BUILD-UP ON THE FIRESIDES OF THE BOILER	* Oil flame not retaining to head	
	* Dirty nozzle	* Clean the nozzle
	* Oil spray impinging on burner head	* Check position of the nozzle respect to the head
	* Spray angle of the nozzle too wide	* Reduce spray angle
FLAME IRREGULAR OR SPARKING	* Oil pressure at nozzle too low	* Reset oil pressure
	* Air flow rate too high	* Adjust air flow rate
	* Oil is too cold	* Adjust oil temperature
	* Dirt in the oil	* Check filters
	* Water in the fuel	* Take off all the water
	* Oil impingement on the combustion head	* Drawer assembly far too rear * Nozzle is not protruding through centerhole of air diffuser * Oil flame not retaining to the head
	* Nozzle dirty or damaged	* Clean or, if necessary, replace the nozzle
BURNER LIGHTS BUT FLAME DOESN'T RETAIN TO BURNER HEAD	* Drawer assembly not positioned correctly	* Move forward or backward
	* Nozzle too far forward through centerhole of diffuser	* Move nozzle backward respect to diffuser
	* Oil or air pressure at nozzle is too low	* Increase oil or air pressure
	* Air louver too open	* Reduce air louver opening
	* Too much spread between oil and air (or steam) pressure	* Set the spread to a proper value
FLAME IRREGULAR OR SMOKING	* Not enough combustion air	* Adjust air flow rate
	* Nozzle dirty or damaged	* Clean or, if necessary, replace the nozzle
	* Flame is too big for furnace or nozzle spray angle is wrong	* Check burner-furnace coupling * Change nozzle with a suitable one
	* Nozzle spray angle wrong (flame too long or too wide)	* Replace nozzle
	* Boiler dirty	* Clean the boiler
	* Not enough suction at chimney	* Check chimney cleanness or size
	* Pressure at nozzle too low	* Reset oil pressure
	* Oil too cold	* Reset oil temperature
	* Combustion air inlet dirty	* Clean the air inlet
	* Flame is too small respect to furnace volume	* Replace nozzle or reset pump pressure
FUEL GAS TEMPERATURE TOO HIGH	* Boiler dirty	* Clean the boiler
	* Oil flow rate too high	* Adjust oil pressure or replace nozzle

TROUBLESHOOTNG GUIDE - Gas operation

BURNER DOESN'T LIGHT	* No electric power supply	* Wait until power supply is back
	* Main switch open	* Close the switch
	* Thermostats open	* Check set points and thermostat connections
	* Bad thermostat set point or broken thermostat	* Set or replace the thermostat
	* No gas pressure	* Restore gas pressure
	* Safety devices (manually operated safety thermostat or pressure switch and so on) open	* Restore safety devices; wait that boiler reaches its temperature then check safety device functionality.
	* Broken fuses	* Replace fuses. Check current absorption
	* Fan thermal contacts open (only three phases)	* Reset contacts and check current absorption
	* Burner control locked out	* Reset and check its functionality
	* Burner control damaged	* Replace burner control
GAS LEAKAGE: BURNER LOCKS OUT (NO FLAME)	* Gas flow too low	* Increase the gas flow * Check gas filter cleanness * Check butterfly valve opening when burner is starting (only Hi-Low flame and progressive)
	* Ignition electrodes discharge to ground because dirty or broken	* Clean or replace electrodes
	* Bad electrodes setting	* Check electrodes position referring to instruction manual
	* Electrical ignition cables damaged	* Replace cables
	* Bad position of cables in the ignition transformer or into the electrodes	* Improve the installation
	* Ignition transformer damaged	* Replace the transformer
BURNER LOCKS OUT WITH FLAME PRESENCE	* Bad flame detector set	
	* Flame detector damaged	* Replace or adjust flame detector
	* Bad cables of flame detector	* Check cables
	* Burner control damaged	* Replace burner control
	* Phase and neutral inverted	* Adjust connections
	* Ground missing or damaged	* Check ground continuity
	* Voltage on neutral	* Take off tension on neutral
	* Too small flame (due to not much gas)	* Adjust gas flow * Check gas filter cleanness
	* Too much combustion air	* Adjust air flow rate
BURNER CONTINUES TO PERFORM PRE-PURGE	* Burner control damaged	* Replace burner control
	* Air servomotor damaged	* Replace servomotor
BURNER CONTINUES TO PERFORM ALL ITS FEATURES WITHOUT IGNITING THE BURNER	* Air pressure switch damaged or bad links	* Check air pressure switch functions and links
	* Burner control damaged	* Replace burner control
BURNER LOCKS OUT WITHOUT ANY GAS FLOW	* Gas valves don't open	* Check voltage on valves; if necessary replace valve or the burner control * Check if the gas pressure is so high that the valve cannot open
	* Gas valves completely closed	* Open valves
	* Pressure governor too closed	* Adjust the pressure governor
	* Butterfly valve too closed	* Open the butterfly valve
	* Maximum pressure switch (if installed) open.	* Check connection and functionality
	* Air pressure switch doesn't close the NO contact	* Check connections * Check pressure switch functionality
BURNER LOCKS OUT AND THE CONTROL WINDOW SHOWS A P (SIEMENS & STAEFA ONLY)	* Air pressure switch damaged (it keeps the stand-by position or badly set	* Check air pressure switch functionality * Reset air pressure switch
	* Air pressure switch connections wrong	* Check connections
	* Air fan damaged	* Replace motor
	* No power supply	* Reset power supply
	* Air damper too closed	* Adjust air damper position
BURNER LOCKS OUT DURING NORMAL RUNNING	* Flame detector circuit interrupted	* Check wiring * Check photocell
	* Burner control damaged	* Replace burner control
	* Maximum gas pressure switch damaged or badly set	* Reset pressure switch or replace it
WHEN STARTING THE BURNER OPENS FOR A WHILE THE VALVES AND THEN REPEATS FROM THE BEGINNINGTHE CYCLE FROM PRE-PURGE	* Gas pressure switch badly set	* Reset the pressure switch
	* Gas filter dirty	* Clean gas filter
	* Gas governor too low or damaged	* Reset or replace the governor
BURNER STANDS WHILE RUNNING WITHOUT ANY SWITCHING OF THERMOSTATS	* Thermal contacts of fan motor open	* Reset contacts and check values * Check current absorption
FAN MOTOR DOESN'T START	* Internal motor wiring broken	* Replace wiring or complete motor
	* Fan motor starter broken	* Replace starter
	* Fuses broken (three phases only)	* Replace fuses and check current absorption
BURNER DOESN'T SWITCH TO HIGH FLAME	* Hi-low flame thermostat badly set or damaged	* Reset or replace thermostat
	* Servomotor cam badly set	* Reset servomotor cam
SOMETIMES THE SERVOMOTOR RUNS IN THE WRONG WAY	* Servomotor capacitor damaged	* Replace capacitor

SIEMENS LME11/21/22 CONTROL BOX

The series of equipment LME.. is used for the starup and supervisione of 1- or 2- stage gas burners. The series LME.. is interchangeable with the series LGB.. and LMG.., all diagrams and accessories are interchangeable.

Comparative table

LGB Series	LMG Series	LME Series
---	LMG 25.33	LME 11.33
LGB 21.33	LMG 21.33	LME 21.33
LGB 22.33	LMG 22.33	LME 22.33

Preconditions for burner startup

- Burner control must be reset
- All contacts in the line are closed, request for heat
- No undervoltage
- Air pressure switch LP must be in its “no-load” position
- Fan motor or AGK25 is closed
- Flame detector is darkened and there is no extraneous light

Undervoltage

Safety shutdown from the operating position takes place should mains voltage drop below about AC 175 V (at UN = AC 230 V)

Restart is initiated when mains voltage exceeds about AC 185 V (at UN = AC 230 V).

Controlled intermittent operation

After no more than 24 hours of continuous operation, the burner control will initiate automatic controlled shutdown followed by a restart.

Reversed polarity protection with ionization

If the connections of live conductor (terminal 12) and neutral conductor (terminal 2) aremixed up, the burner control will initiate lockout at the end of the safety time “TSA”.

Control sequence in the event of fault

If lockout occurs, the outputs for the fuel valves, the burner motor and the ignition equipment will immediately be deactivated (< 1 second).

Operational status indication

In normal operation, the different operating states are showed by means of the multicolor LED, inside the lockout reset button:

LED **red LED** **yellow LED** **green LED**	..... Steady on ❍... Off

During startup, status indication takes place according to the table:

Status	Color code	Color
Waiting time tw, other waiting states	❍.....	Off
Ignition phase, ignition controlled	● ❍ ● ❍ ● ❍ ● ❍ ● ❍ ●	Flashing yellow
Operation, flame ok	□.....	Green
Operation, flame not ok	□ ❍ □ ❍ □ ❍ □ ❍ □ ❍	Flashing green
Extraneous light on burner startup	□ ▲ □ ▲ □ ▲ □ ▲ □ ▲	Green - red
Undervoltage	● ▲ ● ▲ ● ▲ ● ▲ ● ▲	Yellow - red
Fault, alarm	▲.....	Red
Error code output (refer to “Error code table”)	▲❍ ▲❍ ▲❍ ▲❍	Flashing red

START-UP PROGRAM

As far as the startup program, see its time diagram:

A Start command (switching on)

This command is triggered by control thermostat / pressure controller «R». Terminal 12 receives voltage and the programming mechanism starts running. On completion of waiting time «tw» with the LME21..., or after air damper «SA» has reached the nominal load position (on completion of «t11») with the LME22..., fan motor «M» will be started.

tw Waiting time

During the waiting time, air pressure monitor «LP» and flame relay «FR» are tested for correct contact positions.

t11 Programmed opening time for actuator «SA»

(Only with LME22...) The air damper opens until the nominal load position is reached. Only then will fan motor «M» be switched on.

t10 Specified time for air pressure signal

On completion of this period of time, the set air pressure must have built up, or else lockout will occur.

t1 Prepurge time

Purging the combustion chamber and the secondary heating surfaces: required with low-fire air volumes when using the LME21... and with nominal load air volumes when using the LME22.... The diagrams show the so-called prepurge time «t1» during which air pressure monitor «LP» must indicate that the required air pressure is available. The effective prepurge time «t1» comprises interval end «tw» through «t3».

t12 Programmed closing time for actuator «SA»

(Only with LME22...)During «t12», the air damper travels to the low-fire position.

t3 Preignition time

During «t3» and up to the end of «TSA», flame relay «FR» is forced to close. On completion of «t3», the release of fuel is triggered at terminal 4.

TSA Ignition safety time

On completion of «TSA», a flame signal must be present at terminal 1. That flame signal must be continuously available until shutdown occurs, or else flame relay «FR» will be deenergized, resulting in lockout.

t4 Interval BV1 and BV2-LR

Time between the end of TSA and the signal to the second fuel valve BV2 or to the load controller LR

B - B' Interval for flame establishment

C Burner operation position

C - D Burner operation (heat production)

D Controlled by "R" shutdown

The burner stops and the control device is ready for a new startup.

LME11 control sequence

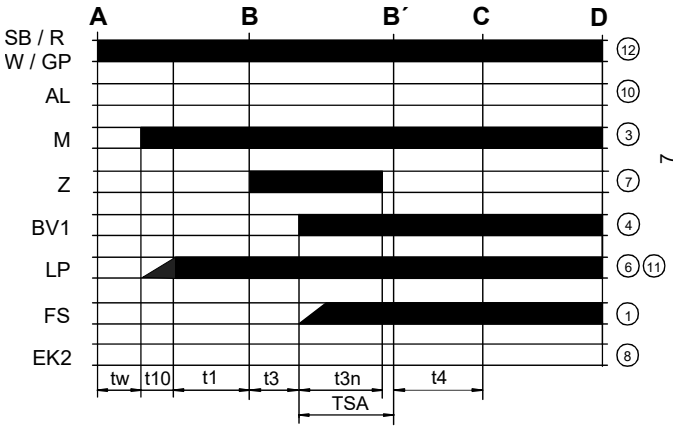

LME21 control sequence

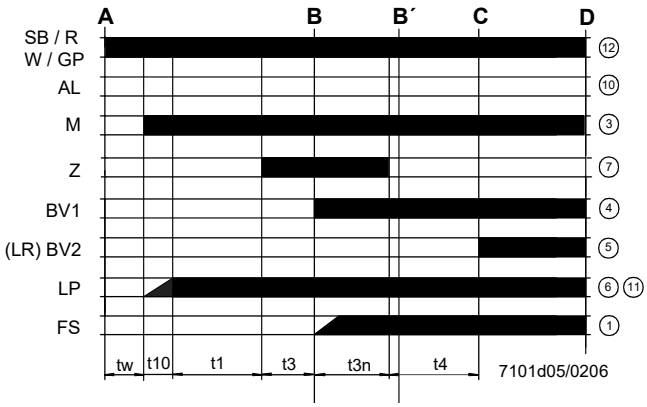

LME22 control sequence

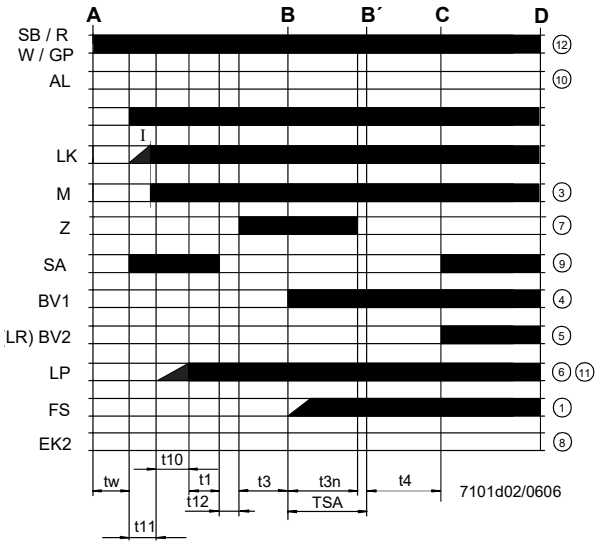

Control sequence

tw	Waiting time
t1	Purge time
TSA	Ignition safety time
t3	Preignition time
t3n	Postignition time
t4	Interval between BV1 and BV2/LR
t10	Specified time for air pressure signal
t11	Programmed opening time for actuator SA
t12	Programmed closing time for actuator SA

LME11 connection diagram

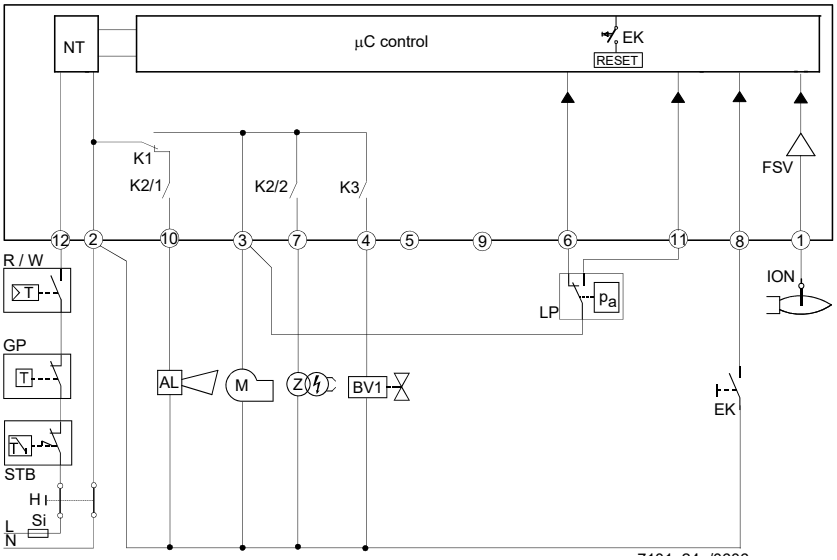

LME21 connection diagram

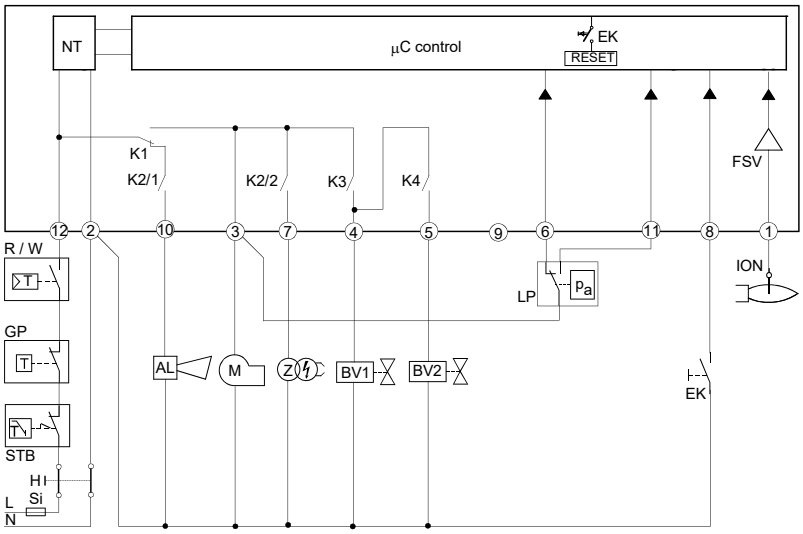

LME22 connection diagram

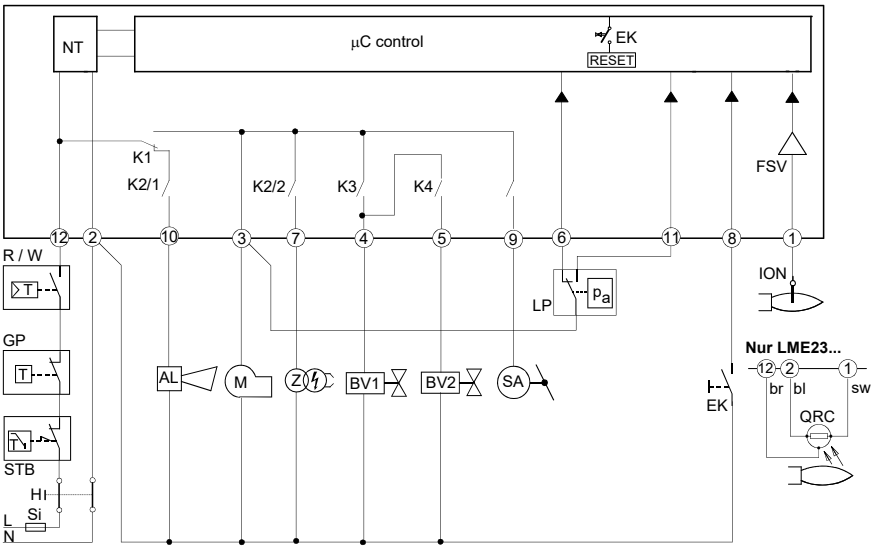

Connection diagram

AL	Error message (alarm)
BV	Fuel valve
EK2	Remote lockout reset button
FS	Flame signal
GP	Gas pressure switch
LP	Air pressure switch
LR	Load controller
M	Fan motor
R	Control thermostat/pressurestat
SB	Safety limit thermostat
W	Limit thermostat /pressure switch
Z	Ignition transformer

CONTROL PROGRAM IN THE EVENT OF FAULT

- If a fault occurs, all outputs will immediately be deactivated (in less than 1s).
- After an interruption of power, a restart will be made with the full program sequence.
- If the operating voltage drops below the undervoltage thresold, a safety shutdown is performed.
- If the operating voltage exceeds the undervoltage thresold, a restart will be performed.
- In case of extraneous light during “t1”, a lockout occurs.
- In case of extraneous light during “tw”, there is a prevention of startup and a lockout after 30 seconds.
- In case of no flame at the end of TSA, there will be max. 3 repetitions of the startup cycle, followed by a lockout at the end of TSA, for mod. LME11..; directly a lockout at the end of TSA for LME21-22 models.
- For LME11 model: if a loss of flame occurs during operation, in case of an establishment of flame at the end of TSA, there will be max. 3 repetitions, otherwise a lockout will occur.
- For LME21-22 models: if a loss of flame occurs during operation, there will be a lockout.
- If the contact of air pressure monitor LP is in working position, a prevention of startup and lockout after 65 seconds will occur.
- IIf the contact of air pressure monitor LP is in normal position, a lockout occurs at the end of t10.
- If no air pressure signal is present after completion of t1, a lockout will occur.

CONTROL BOX LOCKED

In the event of lockout, the LME.. remains locked and the red signal lamp (LED) will light up.The burner control can immediately be reset. This state is also mantained in the case fo mains failure.

DIAGNOSITICS OF THE CASUE OF FAULT

- Press the lockout reset button for more than 3 seconds to activate the visual diagnostics.
- Count the number of blinks of the red signsl lamp and check the fault condition on the “Error code table” (the device repeats the blinks for regular intervals).

During diagnostics, the control outputs are deactivated:

- the burner remains shut down;
- external fault indication is deactivated;
- fault status is showed by the red LED, inside the LME’s lockout reset buttonaccording to the “Error code table”:

ERROR CODE TABLE	
2 blinks **	**No establishment of flame at the end of TSA** - Faulty or soiled fuel valves - Faulty or soiled flame detector - Inadequate adjustement of burner, no fuel - Faulty ignition equipment
3 blinks ***	**The air pressure switch does not switch or remains in idle position:** - LP is faulty - Loss of air pressure signal after t10 - LPis welded in normal position.
4 blinks ****	- Extraneous light when burner starts up.
5 blinks *****	- LP is working position.
6 blinks *****	Free.
7 blinks *******	**Loss of flame during operation** - Faulty or soiled fuel valves - Faulty or soiled flame detector - Inadequate adjustement of burner
8 ÷ 9 blinks	Free
10 blinks **********	**Faulty output contacts** ***Attention: “lockout” remote signal (terminal no. 10) not enabled*** - Wiring error - Anomalous voltage on ouput terminals - Other faults
14 blinks ************ (only for LME4x)**	- CPI contact (gas valve microswitch) not closed.

RESETTING THE BURNER CONTROL

When lockout occurs, the burner control can immediately be reset, by pressing the lockout reset button for about 1..3 seconds. The LME.. can only be reset when all contacts in the line are closed and when there is no undervoltage.

LIMITATION OF REPETITIONS (only for LME11.. model)

If no flame is established at the end of TSA, or if the flame is lost during operation, a maximum of 3 repetitions per controller startup can be performed via “R”, otherwise lockout will be initiated. Counting of repetitions is restarted each time a controlled startup via “R” takes place.

⚠ **Condensation, formation of ice and ingress of water are not permitted!**

TECHNICAL CHARACTERISTICS

Mains voltage	120V AC +10% / -15% 230V AC +10% / -15%
Frequency	50 ... 60 Hz +/- 6%
Power consumption	12VA
External primary fuse	max. 10 A (slow)
input current at terminal 12	max. 5 A
Detection cable length	max. 3m (for electrode)
Detection cable length	max. 20 m (laid separately, for QRA probe)
Reset cable length	max. 20 m (posato separatamente)
Term. 8 & 10 cable length	max. 20 m
Thermostat cable length and other terminals	max. 3 m
Safety class	I
Index of protection	IP40 (to be ensured during mounting)
Operating conditions	-20... +60 °C, < 95% UR
Storage conditions	-20... +60 °C, < 95% UR
Weight	approx. 160 g

C.I.B. UNIGAS S.p.A.
Via L.Galvani, 9 - 35011 Campodarsego (PD) - ITALY
Tel. +39 049 9200944 - Fax +39 049 9200945/9201269
web site: www.cibunigas.it - e-mail: cibunigas@cibunigas.it

Note: specifications and data subject to change. Errors and omissions excepted.

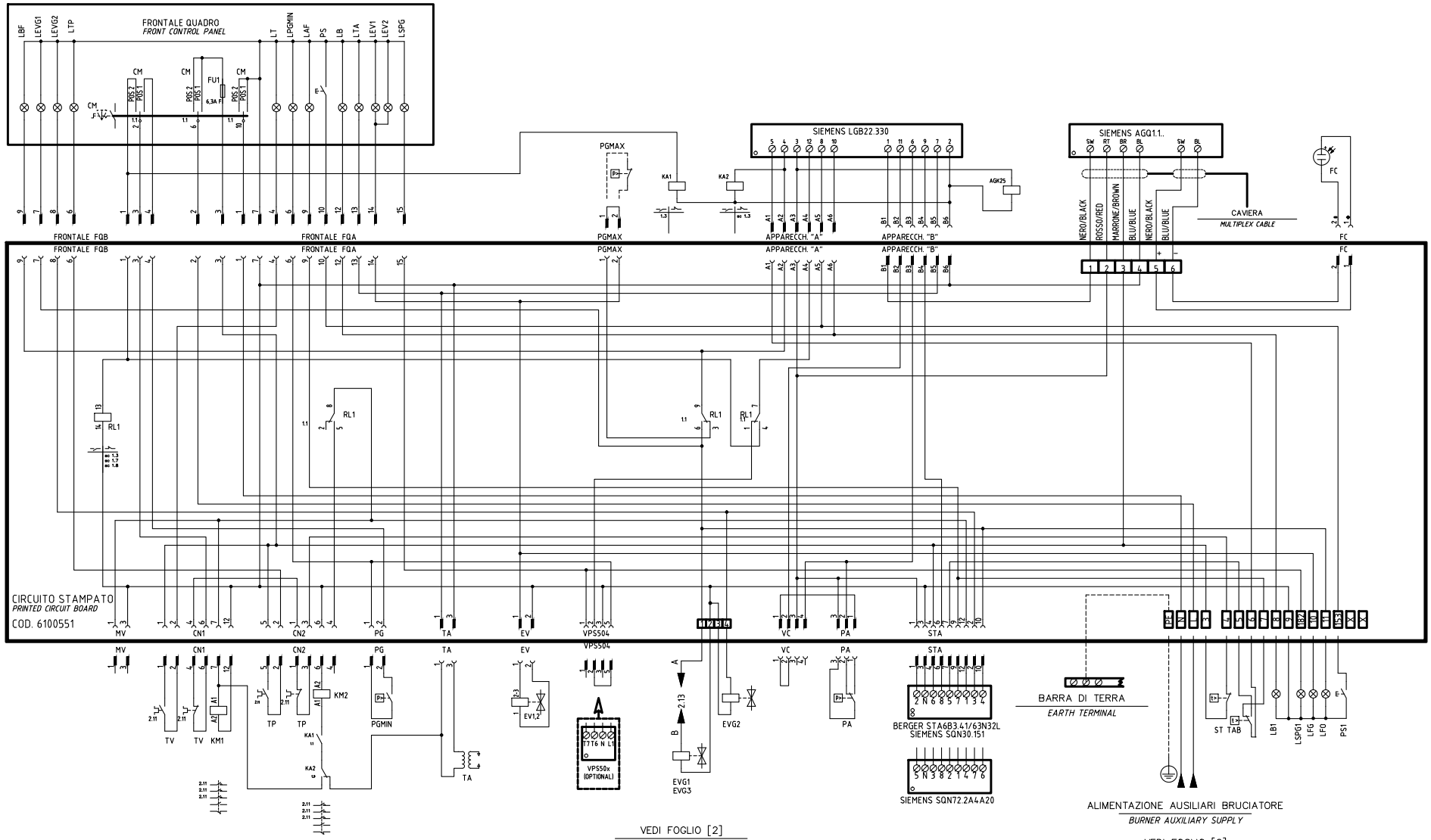

CAMME SERVOCOMANDO
ACTUATOR CAMS
STA6B3.41/63N32L

ST2	ALTA FIAMMA *HIGH FLAME*
ST0	SOSTA *STAND-BY*
ST1	BASSA FIAMMA *LOW FLAME*
MV	APERTURA EVG2 *OPEN EVG2*

CAMME SERVOCOMANDO (ALTERNATIVO)
ACTUATOR CAMS (ALTERNATIVE)
SQN30.151

I	ALTA FIAMMA *HIGH FLAME*
II	SOSTA *STAND-BY*
III	BASSA FIAMMA *LOW FLAME*
V	APERTURA EVG2 *OPEN EVG2*

CAMME SERVOCOMANDO (ALTERNATIVO)
ACTUATOR CAMS (ALTERNATIVE)
SQN72.2A4A20

I (ROSSO) *I (RED)*	ALTA FIAMMA *HIGH FLAME*
II (BLU) *II (BLUE)*	SOSTA *STAND-BY*
III (ARANCIO) *III (ORANGE)*	BASSA FIAMMA *LOW FLAME*
IV (NERO) *IV (BLACK)*	APERTURA EVG2 *OPEN EVG2*

REV.	MODIFICA	DATA	FIRME
03	ADDED "POMAX" + "MP" & "TA"	23/04/12	U. PINTON
02	AGGIUNTO/ADDED SQN72...	22/05/09	U. PINTON
01	ADDED EARTH TERMINAL	10/12/07	U. PINTON

UNIGAS

Impianto
TIPI/TYPES HP60 ÷ HP73A
MODELLO/MODEL xG-.AB.x.xx.A.x.xx

Descrizione
VERSIONE CON CIRCUITO STAMPATO
WITH PRINTED CIRCUIT VERSION

Ordine

Commessa

Esecutore: U. PINTON

Data Controllato: 23/04/2012

Controllato: S. MARCHETTI

Data: 10/12/2007

Revisione: 03

Dis. N. 18 - 119 / A

PREC.: /

FOGLIO: 1

SEGUE: 2

TOTALE: 2

SIGLA/ITEM	FUNZIONE	FUNCTION
AGK25	RESISTENZA SIMULAZIONE CARICO MOTORE VENTILATORE	RESISTANCE FOR FAN MOTOR LOAD SIMULATION
BERGER STA6B3.41/63N32L	SERVOCOMANDO SERRANDA ARIA	AIR DAMPER ACTUATOR
CM	SELETTORE MANUALE COMBUSTIBILE 1) GAS 0) OFF 2) GASOLIO	COMBUSTIBLE SELECTOR 1)GAS 0)OFF 2)LIGHT OIL
EV1,2	ELETTROVALVOLE GAS (O GRUPPO VALVOLE)	GAS ELECTRO-VALVES (OR VALVES GROUP)
EVG1	ELETTROVALVOLE GASOLIO	LIGHT OIL ELECTRO VALVE
EVG2	ELETTROVALVOLA GASOLIO	LIGHT OIL SOLENOID VALVE
F2	FUSIBILI LINEA MOTORE VENTILATORE	FAN MOTOR LINE FUSES
F3	FUSIBILE DI LINEA	LINE FUSE
F4	FUSIBILI LINEA POMPA	PUMP LINE FUSES
FC	SONDA UV RILEVAZIONE FIAMMA	UV FLAME DETECTOR
FU1	FUSIBILE DI LINEA	LINE FUSE
IG	INTERRUTTORE GENERALE	MAINS SWITCH
KA1	RELE' AUSILIARIO	AUXILIARY RELAY
KA2	RELE' AUSILIARIO	AUXILIARY RELAY
KM1	CONTATTORE MOTORE VENTILATORE	FAN MOTOR CONTACTOR
KM2	CONTATTORE MOTORE POMPA GASOLIO	LIGHT OIL PUMP MOTOR CONTACTOR
LAF	LAMPADA SEGNALAZIONE ALTA FIAMMA BRUCIATORE	BURNER IN HIGH FLAME INDICATOR LIGHT
LB	LAMPADA SEGNALAZIONE BLOCCO BRUCIATORE	INDICATOR LIGHT FOR BURNER LOCK-OUT
LB1	LAMPADA SEGNALAZIONE BLOCCO BRUCIATORE	INDICATOR LIGHT FOR BURNER LOCK-OUT
LBF	LAMPADA SEGNALAZIONE BASSA FIAMMA BRUCIATORE	BURNER IN LOW FLAME INDICATOR LIGHT
LEV1	LAMPADA SEGNALAZIONE APERTURA [EV1]	INDICATOR LIGHT FOR OPENING OF ELECTRO-VALVE [EV1]
LEV2	LAMPADA SEGNALAZIONE APERTURA [EV2]	INDICATOR LIGHT FOR OPENING OF ELECTRO-VALVE [EV2]
LEVG1	LAMPADA SEGNALAZIONE APERTURA [EVG1]	INDICATOR LIGHT FOR OPENING OF ELECTRO-VALVE [EVG1]
LEVG2	LAMPADA SEGNALAZIONE APERTURA [EVG2]	INDICATOR LIGHT FOR OPENING OF ELECTRO-VALVE [EVG2]
LFG	LAMPADA SEGNALAZIONE FUNZIONAMENTO BRUCIATORE A GAS	BURNER GAS OPERATION INDICATOR LIGHT
LFO	LAMPADA SEGNALAZIONE FUNZIONAMENTO BRUCIATORE A GASOLIO	BURNER LIGHT OIL OPERATION INDICATOR LIGHT

SIGLA/ITEM	FUNZIONE	FUNCTION
LPGMIN	LAMPADA SEGNALAZIONE PRESENZA GAS IN RETE	INDICATOR LIGHT FOR PRESENCE OF GAS IN THE NETWORK
LSPG	LAMPADA SEGNALAZIONE BLOCCO CONTROLLO TENUTA VALVOLE	INDICATOR LIGHT FOR LEAKAGE OF VALVES
LSPG1	LAMPADA SEGNALAZIONE BLOCCO CONTROLLO TENUTA VALVOLE	INDICATOR LIGHT FOR LEAKAGE OF VALVES
LT	LAMPADA SEGNALAZIONE BLOCCO TERMICO MOTORE VENTILATORE	INDICATOR LIGHT FOR FAN MOTOR OVERLOAD THERMAL CUTOUT
LTA	LAMPADA SEGNALAZIONE TRASFORMATORE DI ACCENSIONE	IGNITION TRANSFORMER INDICATOR LIGHT
LTP	LAMPADA SEGNALAZIONE BLOCCO TERMICO MOTORE POMPA	INDICATOR LIGHT FOR PUMP MOTOR OVERLOAD THERMAL CUTOUT
MP	MOTORE POMPA GASOLIO	LIGHT OIL PUMP MOTOR
MV	MOTORE VENTILATORE	FAN MOTOR
PA	PRESSOSTATO ARIA	AIR PRESSURE SWITCH
PGMAX	PRESSOSTATO GAS DI MASSIMA PRESSIONE (OPTIONAL)	MAXIMUM PRESSURE GAS SWITCH (OPTIONAL)
PGMIN	PRESSOSTATO GAS DI MINIMA PRESSIONE	MINIMUM GAS PRESSURE SWITCH
POMAX	PRESSOSTATO DI MASSIMA PRESSIONE OLIO (OPTIONAL)	MAXIMUM OIL PRESSURE SWITCH (OTIONAL)
PS	PULSANTE SBLOCCO FIAMMA	LOCK-OUT RESET BUTTON
PS1	PULSANTE SBLOCCO FIAMMA	LOCK-OUT RESET BUTTON
RL1	RELE' AUSILIARIO	AUXILIARY RELAY
SIEMENS AGQ1.1A27	ADATTATORE PER SONDA UV RILEVAZIONE FIAMMA	ADAPTER FOR UV FLAME DETECTOR
SIEMENS LGB22.330	APPARECCHIATURA CONTROLLO FIAMMA	CONTROL BOX
SIEMENS SQN30.151	SERVOCOMANDO SERRANDA ARIA (ALTERNATIVO)	AIR DAMPER ACTUATOR (ALTERNATIVE)
SIEMENS SQN72.2A4A20	SERVOCOMANDO SERRANDA ARIA (ALTERNATIVO)	AIR DAMPER ACTUATOR (ALTERNATIVE)
ST	SERIE TERMOSTATI/PRESSOSTATI	SERIES OF THERMOSTATS OR PRESSURE SWITCHES
TA	TRASFORMATORE DI ACCENSIONE	IGNITION TRANSFORMER
TAB	TERMOSTATO/PRESSOSTATO ALTA-BASSA FIAMMA	HIGH-LOW THERMOSTAT/PRESSURE SWITCHES
TP	TERMICO MOTORE POMPA GASOLIO	LIGHT OIL PUMP MOTOR THERMAL
TV	TERMICO MOTORE VENTILATORE	FAN MOTOR THERMAL
VPS50x	CONTROLLO DI TENUTA VALVOLE GAS (OPTIONAL)	GAS PROVING SYSTEM (OPTIONAL)

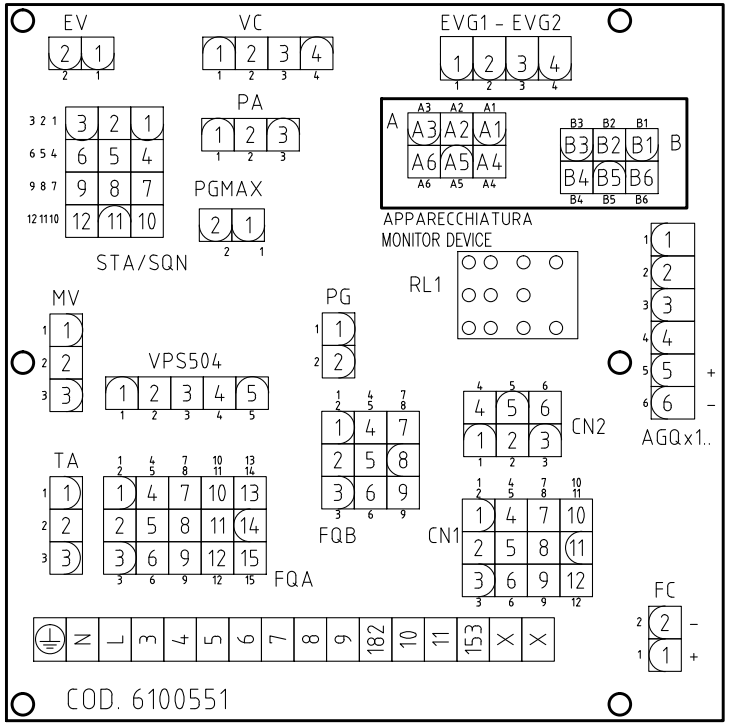

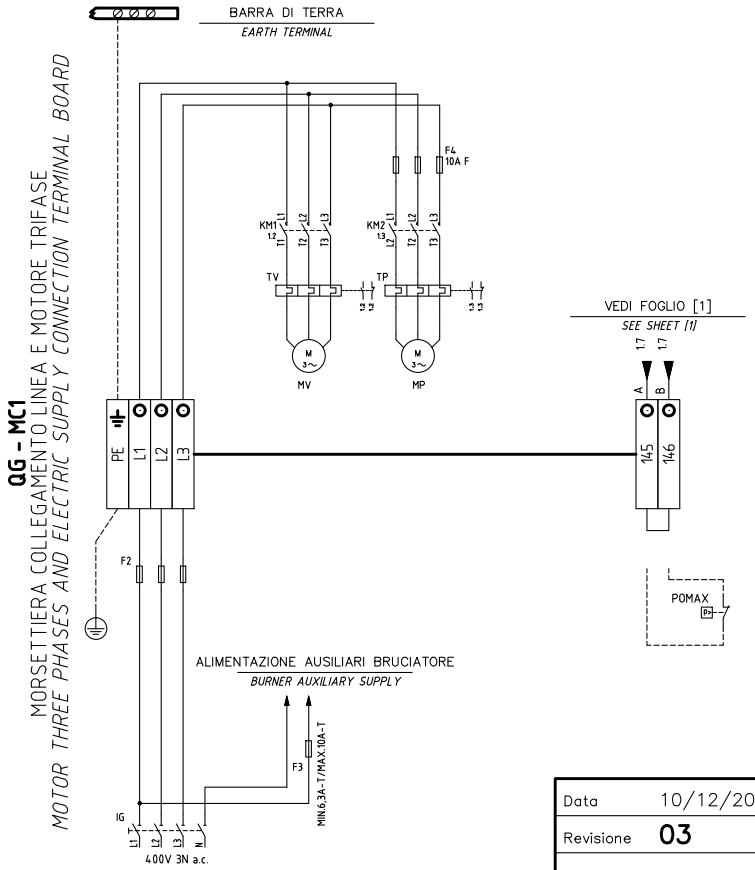

Data	10/12/2007	PREC.	FOGLIO
Revisione	03	1	2
Dis. N.	18 - 119 / A	SEGUE /	TOTALE 2