KPBY91
KPBY92
KPBY93
KRBY512
KRBY515
KRBY520
KRBY525

LMV2x

Microprocessor-controlled
Progressive
and fully-modulating gas - heavy oil burners

MANUAL OF INSTALLATION - USE - MAINTENANCE

CIB UNIGAS

BURNERS - BRUCIATORI - BRULERS - BRENNER - QUEMADORES - ГОРЕЛКИ

M039423CA 0.3 11/2023
M12923CA 0.7 03/2016

DANGERS, WARNINGS AND NOTES OF CAUTION

This manual is supplied as an integral and essential part of the product and must be delivered to the user.

Information included in this section are dedicated both to the user and to personnel following product installation and maintenance.

The user will find further information about operating and use restrictions, in the second section of this manual. we highly recommend to read it.

Carefully keep this manual for future reference.

The following:

- Entails the customer's acknowledgement and acceptance of the company's general terms and conditions of sale, in force at the date of order confirmation and available in the appendix to the current price lists.
- Is intended exclusively for specialised, experienced and trained users able to operate in conditions that are safe for people, the device and the environment, and in full compliance with the requirements set out on the following pages and with current health and safety regulations.

Information regarding assembly/installation, maintenance, replacement and repair is always and exclusively intended for (and therefore only to be carried out by) specialised personnel and/or directly by the Authorised Technical Service

IMPORTANT :

The supply has been made at the best conditions on the basis of the customer's order and technical indications concerning the state of the places and the installation systems, as well as the need to prepare certain certifications and / or additional adaptations with respect to the standard observed and transmitted for each product. In this respect, the manufacturer declines any responsibility for complaints, malfunctions, criticalities, damages and/or anything else consequent to incomplete, inaccurate and/or missing information, as well as failure to comply with the technical requirements and installation regulations, initial start-up, operational management and maintenance.

For proper operation of the device, it is necessary to ensure the readability and conservation of the manual, also for future reference. In case of deterioration or more simply for reasons of technical and operational insight, contact the manufacturer directly. Text, descriptions, images, examples and anything else contained in this document are the exclusive property of the manufacturer. Any reproduction is prohibited.

RISK ANALYSIS

Instruction manual supplied with the burner:

This is an integral and essential part of the product and must not be separated from it. It must therefore be kept carefully for any necessary consultation and must accompany the burner even if it is transferred to another owner or user, or to another system. In the event of damage or loss, another copy must be requested from the local customer service centre;

Delivery of the system and instruction manual

.

The supplier of the system is obliged to accurately inform the user about:– Use of the system;

– any further testing that may be necessary before activating the system;

– maintenance and the requirement to have the system checked at least once a year by a contractor or other specialised technician.

To ensure periodic monitoring, the manufacturer recommends drawing up a Maintenance Agreement.

WARRANTY AND LIABILITY

In particular, warranty and liability claims will no longer be valid in the event of damage to persons and/or property if such damage is due to any of the following causes:

- Incorrect installation, start-up, use and maintenance of the burner;
- Improper, incorrect or unreasonable use of the burner;
- Operation by unqualified personnel;
- Carrying out of unauthorised changes to the device;
- Use of the burner with safety devices that are faulty, incorrectly applied and/or not working;
- Installation of untested supplementary components on the burner;
- Powering of the burner with unsuitable fuels;
- Faults in the fuel supply system;
- Use of the burner even after an error and/or fault has occurred;
- Repairs and/or overhauls incorrectly carried out;
- Modification of the combustion chamber with inserts that prevent the regular development of the structurally established flame;
- Insufficient and inappropriate supervision and care of the burner components most subject to wear and tear;
- Use of non-original components, whether spare parts, kits, accessories and optionals;
- Force majeure.

Furthermore, the manufacturer declines all responsibility for non-compliance with this manual.

WARNING! Failure to comply with this manual, operational negligence, incorrect installation and unauthorised modifications will result in the manufacturer's warranty for the burner being voided.

Personnel training

The user is the person, organisation or company that has acquired the appliance and intends to use it for the specific purpose. The user is responsible for the appliance and for training the personnel that operate it.

The user:

- Undertakes to entrust the machine to suitably trained and qualified personnel;
- Must take all measures necessary to prevent unauthorised people gaining access to the appliance;
- Undertakes to adequately inform personnel about application and observance of the safety requirements, and therefore ensure that they are familiar with the operating instructions and safety requirements;
- Must inform the manufacturer if any faults or malfunctions of the accident prevention systems occur, and if there is any suspected danger;
- Personnel must always use the personal protective equipment required by law and follow the instructions provided in this manual;
- Personnel must observe all danger and caution notices on the appliance;
- Personnel must not carry out, on their own initiative, operations or interventions outside their area of expertise;
- Personnel must inform their superiors of any problem and danger that may arise;
- The assembly of parts of other makes, or any modifications made, may alter the characteristics of the appliance and may therefore compromise operational safety. The manufacturer therefore declines all responsibility for damages arising from the use of non-original parts.

GENERAL INTRODUCTION

- The equipment must be installed in compliance with the regulations in force, following the manufacturer's instructions, by qualified personnel.
- Qualified personnel means those having technical knowledge in the field of components for civil or industrial heating systems, sanitary hot water generation and particularly service centres authorised by the manufacturer.
- Improper installation may cause injury to people and animals, or damage to property, for which the manufacturer cannot be held liable.
- Remove all packaging material and inspect the equipment for integrity.

In case of any doubt, do not use the unit - contact the supplier.

The packaging materials (wooden crate, nails, fastening devices, plastic bags, foamed polystyrene, etc), should not be left within the reach of children, as they may prove harmful.

- Before any cleaning or servicing operation, disconnect the unit from the mains by turning the master switch OFF, and/or through the cutout devices that are provided.
- Make sure that inlet or exhaust grilles are unobstructed.
- In case of breakdown and/or defective unit operation, disconnect the unit. Make no attempt to repair the unit or take any direct action.

Contact qualified personnel only.

Units shall be repaired exclusively by a servicing centre, duly authorised by the manufacturer, with original spare parts and accessories.

Failure to comply with the above instructions is likely to impair the unit's safety.

To ensure equipment efficiency and proper operation, it is essential that maintenance operations are performed by qualified personnel at regular intervals, following the manufacturer's instructions.

- When a decision is made to discontinue the use of the equipment,

those parts likely to constitute sources of danger shall be made harmless.

- In case the equipment is to be sold or transferred to another user, or in case the original user should move and leave the unit behind, make sure that these instructions accompany the equipment at all times so that they can be consulted by the new owner and/or the installer.
- This unit shall be employed exclusively for the use for which it is meant. Any other use shall be considered as improper and, therefore, dangerous.

The manufacturer shall not be held liable, by agreement or otherwise, for WARNING! Failure to observe the information given in this manual, operating negligence, incorrect installation and carrying out of non authorised modifications will result in the annulment by the manufacturer of the guarantee that it supplies with the burner.

The damages resulting from improper installation, use and failure to comply with the instructions supplied by the manufacturer.The occurrence of any of the following circustances may cause explosions, polluting unburnt gases (example: carbon monoxide CO), burns, serious harm to people, animals and things:

- Failure to comply with one of the WARNINGS in this chapter
- Incorrect handling, installation, adjustment or maintenance of the burner
- Incorrect use of the burner or incorrect use of its parts or optional supply

SPECIAL INSTRUCTIONS FOR BURNERS

a Make the following checks:

- • the burner should be installed in a suitable room, with ventilation openings complying with the requirements of the regulations in force, and sufficient for good combustion;
- • only burners designed according to the regulations in force should be used;
- • this burner should be employed exclusively for the use for which it was designed;
- • before connecting the burner, make sure that the unit rating is the same as delivery mains (electricity, gas oil, or other fuel);
- • observe caution with hot burner components. These are, usually, near to the flame and the fuel pre-heating system, they become hot during the unit operation and will remain hot for some time after the burner has stopped.

When the decision is made to discontinue the use of the burner, the user shall have qualified personnel carry out the following operations:

a • remove the power supply by disconnecting the power cord from the mains;

b • disconnect the fuel supply by means of the hand-operated shutoff valve and remove the control handwheels from their spindles.

Special warnings

- Make sure that the burner has, on installation, been firmly secured to the appliance, so that the flame is generated inside the appliance firebox.
- Before the burner is started and, thereafter, at least once a year, have qualified personnel perform the following operations:
  - a set the burner fuel flow rate depending on the heat input of the appliance;
  - b set the flow rate of the combustion-supporting air to obtain a combustion efficiency level at least equal to the lower level required by the regulations in force;
  - c check the unit operation for proper combustion, to avoid any harmful or polluting unburnt gases in excess of the limits permitted by the regulations in force;
  - d make sure that control and safety devices are operating properly;
  - e make sure that exhaust ducts intended to discharge the products of combustion are operating properly;
  - f on completion of setting and adjustment operations, make sure that all mechanical locking devices of controls have been duly tightened;
  - g make sure that a copy of the burner use and maintenance instructions is available in the boiler room.
- In case of a burner shut-down, reser the control box by means of the RESET pushbutton. If a second shut-down takes place, call the Technical Service, without trying to RESET further.
- The unit shall be operated and serviced by qualified personnel only, in compliance with the regulations in force.

GENERAL INSTRUCTIONS DEPENDING ON FUEL USED

ELECTRICAL CONNECTION

- For safety reasons the unit must be efficiently earthed and installed as required by current safety regulations.
- It is vital that all saftey requirements are met. In case of any doubt, ask for an accurate inspection of electrics by qualified personnel, since the manufacturer cannot be held liable for damages that may be caused by failure to correctly earth the equipment.
- Qualified personnel must inspect the system to make sure that it is adequate to take the maximum power used by the equipment shown on the equipment rating plate. In particular, make sure that the system cable cross section is adequate for the power absorbed by the unit.
- No adaptors, multiple outlet sockets and/or extension cables are permitted to connect the unit to the electric mains.
- An omnipolar switch shall be provided for connection to mains, as required by the current safety regulations.
- The use of any power-operated component implies observance of a few basic rules, for example:
  - do not touch the unit with wet or damp parts of the body and/or with bare feet;
  - do not pull electric cables;
  - do not leave the equipment exposed to weather (rain, sun, etc.) unless expressly required to do so;
  - do not allow children or inexperienced persons to use equipment;
- The unit input cable shall not be replaced by the user. In case of damage to the cable, switch off the unit and contact qualified personnel to replace.

When the unit is out of use for some time the electric switch supplying all the power-driven components in the system (i.e. pumps, burner, etc.) should be switched off.

FIRING WITH GAS, LIGHT OIL OR OTHER FUELS GENERAL

General Warnings

- The burner shall be installed by qualified personnel and in compliance with regulations and provisions in force; wrong installation can cause injuries to people and animals, or damage to property, for which the manufacturer cannot be held liable.
- Before installation, it is recommended that all the fuel supply system pipes be carefully cleaned inside, to remove foreign matter that might impair the burner operation.
- Before the burner is commissioned, qualified personnel should inspect the following:
  - a the fuel supply system, for proper sealing;
  - b the fuel flow rate, to make sure that it has been set based on the firing rate required of the burner;
  - c the burner firing system, to make sure that it is supplied for the designed fuel type;
  - d the fuel supply pressure, to make sure that it is included in the range shown on the rating plate;
  - e the fuel supply system, to make sure that the system dimensions are adequate to the burner firing rate, and that the system is equipped with all the safety and control devices required by the regulations in force.
- When the burner is to remain idle for some time, the fuel supply tap or taps should be closed.

Special instructions for using gas

Have qualified personnel inspect the installation to ensure that:

- a the gas delivery line and train are in compliance with the regulations and provisions in force;
- b all gas connections are tight;
- c the boiler room ventilation openings are such that they ensure the air supply flow required by the current regulations, and in any case are sufficient for proper combustion.

- Do not use gas pipes to earth electrical equipment.
- Never leave the burner connected when not in use. Always shut the gas valve off.
- In case of prolonged absence of the user, the main gas delivery valve to the burner should be shut off.

BURER DATA PLATE

For the following information, please refer to the data plate:

- Burner type and burner model: must be reported in any communication with the supplier
- Burner ID (serial number): must be reported in any communication with the supplier
- Date of production (year and month)
- Information about fuel type and network pressure

	Consump
Type	--
Model	--
Year	--
S.Number	--
Output	--
Oil Flow	--
Fuel	--
Category	--
Gas Pressure	--
Viscosity	--
El.Supply	--
El.Consump.	--
Fan Motor	--
Protection	--
Drwaing n°	--
P.I.N.	--

Precautions if you can smell gas

a do not operate electric switches, the telephone, or any other item likely to generate sparks;

b immediately open doors and windows to create an air flow to purge the room;

c close the gas valves;

d contact qualified personnel.

- Do not obstruct the ventilation openings of the room where gas appliances are installed, to avoid dangerous conditions such as the development of toxic or explosive mixtures.

Using oil pressure gauges

Generally, pressure gauges are equipped with a manual valve. Open the valve only to take the reading and close it immediately afterwards.

SYMBOLS USED

WARNING	Failure to observe the warning may result in irreparable damage to the unit or damage to the environment
DANGER!	Failure to observe the warning may result in serious injuries or death.
WARNING	Failure to observe the warning may result in electric shock with lethal consequences.

BURNER SAFETY

The burners- and the configurations described below - comply with the regulations in force regarding health, safety and the environment. For more in-depth information, refer to the declarations of conformity that are an integral part of this Manual.

.

DANGER! Incorrect motor rotation can seriously damage property and injure people.

.Do not touch any mechanical moving parts with your hands or any other part of your body. Injury hazard

Do not touch any parts containing fuel (i.e. tank and pipes). Scalding hazard

Do not use the burner in situations other than the ones provided for in the data plate.

Do not use fuels other than the ones stated.

Do not use the burner in potentially explosive environments.

Do not remove or by-pass any machine safety devices.

Do not remove any protection devices or open the burner or any other component while the burner is running.

Do not disconnect any part of the burner or its components while the burner is running.

Untrained staff must not modify any linkages.

- After any maintenance, it is important to restore the protection devices before restarting the machine.
- All safety devices must be kept in perfect working order.
- Personnel authorized to maintain the machine must always be provided with suitable protections.

ATTENTION: while running, the parts of the burner near the generator (coupling flange) are subject to overheating. Where necessary, avoid any contact risks by wearing suitable PPE.

Safety and prevention

- Opening or tampering with the burner components is not allowed, apart from the parts requiring maintenance.
- Only those parts envisaged by the manufacturer can be replaced.

DIRECTIVES AND STANDARDS

Gas - Heavy oil burners

European directives

2016/426/UE (appliances burning gaseous fuels)
2014/35/UE (Low Tension Directive)
2014/30/UE (Electromagnetic compatibility Directive)
2006/42/CE (Machinery Directive)

Harmonized standards

UNI EN 676 (Automatic forced draught burners for gaseous fuels)
EN 55014-1 (Electromagnetic compatibility- Requirements for house hold appliances, electric tools and similar apparatus)
EN 60204-1:2006 (Safety of machinery – Electrical equipment of machines.)
CEI EN 60335-1 (Specification for safety of household and similar electrical appliances);
UNI EN ISO 12100:2010 (Safety of machinery - General principles for design - Risk assessment and risk reduction);

Industrial burners

European directives

2006/42/CE (Machinery Directive)
2014/35/UE (Low Tension Directive)
2014/30/UE (Electromagnetic compatibility Directive)
2006/42/CE (Machinery Directive)

Harmonized standards

EN 746-2 (Industrial thermoprocessing equipment - Part 2: Safety requirements for combustion and fuel handling systems)
EN 55014-1 (Electromagnetic compatibility- Requirements for house hold appliances, electric tools and similar apparatus)
EN 60204-1:2006 (Safety of machinery – Electrical equipment of machines.)
CEI EN 60335-1 (Specification for safety of household and similar electrical appliances);
UNI EN ISO 12100:2010 (Safety of machinery - General principles for design - Risk assessment and risk reduction);

PART I: SPECIFICATIONS

BURNERS FEATURES

Burner model identification

Burners are identified by burner type and model. Burner model identification is described as follows.

Type	**KPBY93**	Model	**MH.**	**PR.**	**S.**	**.**	**A.**	**1.**	**65.**	**EC.**
	(1)		**(2)**	**(3)**	**(4)**	**(5)**	**(6)**	**(7)**	**(8)**	**(9)**

(1) BURNER TYPE	**KPBY91 - KPBY92 - KPBY93 - KRBY512 - KRBY515 - KRBY520 - KRBY525**
(2) FUEL	M - Natural gas H = heavy oil, viscosity <= 4000cSt (530°E) a 50°C
(3) OPERATION (Available versions)	MD - Fully modulating
(4) BLAST TUBE	S - Standard L - Extended
(5) DESTINATION COUNTRY	* - see data plate
(6) BURNER VERSION	A - Standard Y - Special
(7) EQUIPMENT	1 = 2 valves + gas proving system 8 = 2 valves + gas proving system + high gas pressure switch
(8) GAS CONNECTION (see Specifications)	50 = Rp2 65 = DN65 80 = DN80 100 = DN100
(9) MICRO-PROCESSOR CONTROL	EC = micro-processor control, without inverter ED = micro-processor control, with inverter

Technical Specifications

BURNER TYPE		**KPBY91**	**KPBY92**	**KPBY93**
Output	min - max kW	480 - 2670	480 - 3050	550 - 4100
Fuel		Natural gas / Heavy oil		
Gas category		(see next paragraph)		
Gas rate	min.- max. (Stm^3/h)	51 - 283	51 - 323	58 - 434
Gas pressure	mbar	(see Note 2)		
Oil viscosity		See “Burner model identification” table		
Heavy oil rate	min - max kg/h	42 - 233	43 - 272	49 - 365
Compressed air pressure	min - max bar	4 - 10		
Power supply		230V 3~ / 400V 3N~ 50Hz		
Total power consumption (with Cucchi Pump)	kW	13.25	18.75	26.75
Total power consumption (with Kral Pump)	kW	12.87	18.55	26.55
Fan motor	kW	4	5.5	7.5
Pump motor (Cucchi)	kW	0.75	0.75	0.75
Pump motor (Kral)	kW	0.37	0.55	0.55
Pre-heater resistors	kW	8	12	18
Protection		IP40		
Operation		MD - Fully modulating		
Gas train 50	ØValves / Connection	2” / Rp 2		
Gas train 65	ØValves / Connection	2”1/2 / DN65		
Gas train 80	ØValves / Connection	3” / DN80		
Gas train 100	ØValves / Connection	4” / DN100		
Operating temperature	°C	-10 ÷ +50		
Storage Temperature	°C	-20 ÷ +60		
Working service*		Intermitent		

BURNER TYPE		KRBY512	KRBY515	KRBY520	KRBY525
Output	min - max kW	600 - 4500	770 - 5200	1000 - 6400	2000 - 8000
Fuel		Natural gas / Heavy oil			
Gas category		(see next paragraph)			
Gas rate	min.- max. (Stm^3/h)	63 - 476	81 - 550	106 - 677	212 - 847
Gas pressure	mbar	(see Note 2)			
Oil viscosity		See “Burner model identification” table			
Heavy oil rate	min - max kg/h	53 - 401	69 - 463	89 - 570	178 – 713
Compressed air pressure	min - max bar	4 - 10			
Power supply		230V 3~ / 400V 3N~ 50Hz			400V 3N~ 50Hz
Total power consumption (with Cuc-	kW	28.45	30.25	40.25	43.75
Total power consumption (with Kral	kW	28.25	30.05	40.05	43.55
Fan motor	kW	9.2	11	15	18.5
Pump motor (Cucchi)	kW	0.75	0.75	0.75	0.75
Pump motor (Kral)	kW	0.55	0.55	0.55	0.55
Pre-heater resistors	kW	18	18	24	24
Protection		IP40			
Operation		MD - Fully modulating			
Gas train 50	ØValves / Connec-	2” / Rp 2			
Gas train 65	ØValves / Connec-	2”1/2 / DN65			
Gas train 80	ØValves / Connec-	3” / DN80			
Gas train 100	ØValves / Connec-	4” / DN100			
Operating temperature	°C	-10 ÷ +50			
Storage Temperature	°C	-20 ÷ +60			
Working service (*)		Intermitent			

(*) NOTE ON THE WORKING SERVICE: the control box automatically stops after 24h of continuous working. The control box immediately starts up, automatically.
Heavy oil net calorific value (Hi): 40.4MJ/kg (average value).

WARNING: the burners are supplied for 400V three phase supply; in case of three phase 230V supply, replace the thermal overload relays. Maximum output is referred to a null backpressure in the furnace.

Note1:	**All gas flow rates are referred to Stm^3 / h (1.013 mbar absolute pressure, 15 °C temperature) and are valid for G20 gas (net calorific value H_i = 34,02 MJ / Stm^3); for L.P.G. (net calorific value H_i = 93,5 MJ / Stm^3)**
Note2:	**Maximum gas pressure = 360 mbar (with Dungs MBDLE)** **= 500 mbar (with Siemens VGD or Dungs MultiBloc MBE)** **Minimum gas pressure = see gas curves.**
Note3:	**Burners are suitable only for indoor operation with a maximum relative humidity of 80 %**
Note4:	**with electrode: for safety reasons the burner must stop automatically every 24 hours**

Gas categories and countries of application

GAS CATEGORY	COUNTRY
I_{2H}	AT, ES, GR, SE, FI, IE, HU, IS, NO, CZ, DK, GB, IT, PT, CY, EE, LV, SI, MT, SK, BG, LT, RO, TR, CH
I_{2E}	LU, PL
$I_{2E(R)B}$	BE
I_{2EK}	NL
I_{2ELL}	DE
I_{2Er}	FR

Fuel

DANGER! The burner must be used only with the fuel specified in the burner data plate.

Type	--
Model	--
Year	--
S.Number	--
Output	--
Oil Flow	--
Fuel	--
Category	--
Gas Pressure	--
Viscosity	--
El.Supply	--
El.Consump.	--

Overall dimensions (mm) KRBY9xx

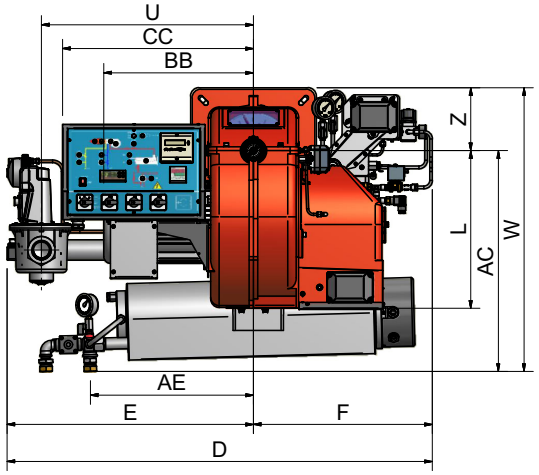

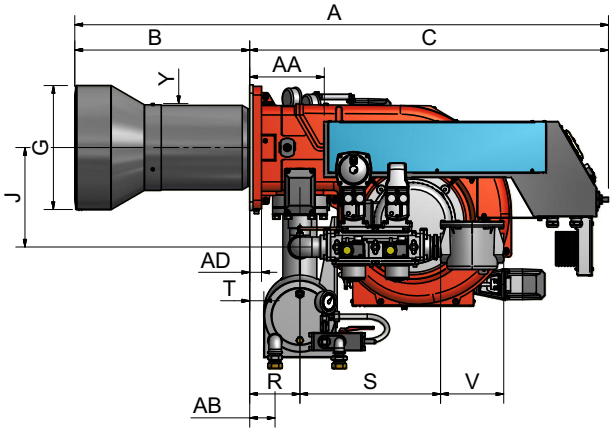

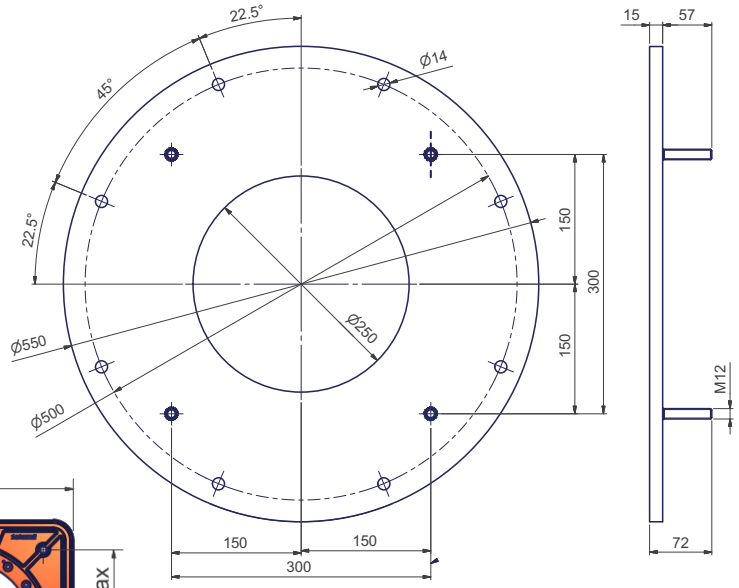

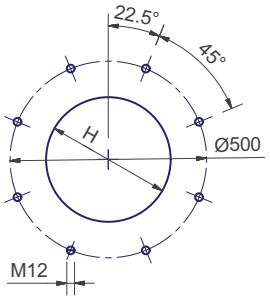

Boiler recommended drilling template

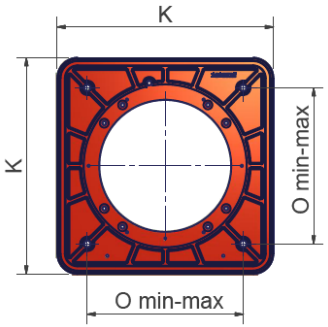

Reccomended counterflange

Burner flange

A COUNTERFLANGE IS MANDATORY:a gasket must be placed between the generator and the counterflange

	DN	A	AA	AD	AN	AP	B	BB	C	CC	D	E	F	G	H	J	L	M	Q	R	S	T	U	V	W	Y	Z
KPBY91	50	1617	234	35	392	100	552	441	1065	562	1188	726	462	365	405	292	466	M12	522	148	374	44	624	216	775	239	185
	65	1617	234	35	368	117	552	441	1065	562	1337	875	462	365	405	251	466	M12	632	148	484	44	750	292	775	239	185
	80	1617	234	35	402	132	552	441	1065	562	1339	877	462	365	405	270	466	M12	683	148	535	44	750	313	775	239	185
	100	1617	234	35	555	145	552	441	1065	562	1429	967	462	365	405	410	466	M12	790	148	642	44	824	353	775	239	185
KPBY92	50	1617	234	35	392	100	552	441	1065	562	1188	726	462	365	405	292	466	M12	522	148	374	44	624	216	775	239	185
	65	1617	234	35	368	117	552	441	1065	562	1337	875	462	365	405	251	466	M12	632	148	484	44	750	292	775	239	185
	80	1617	234	35	402	132	552	441	1065	562	1339	877	462	365	405	270	466	M12	683	148	535	44	750	313	775	239	185
	100	1617	234	35	555	145	552	441	1065	562	1429	967	462	365	405	410	466	M12	790	148	642	44	824	353	775	239	185
KPBY93	50	1571	220	35	392	100	514	441	1056	562	1253	726	527	365	405	292	466	M12	522	148	374	44	624	216	775	258	185
	65	1571	220	35	368	117	514	441	1056	562	1402	875	527	365	405	251	466	M12	632	148	484	44	750	292	775	258	185
	80	1571	220	35	402	132	514	441	1056	562	1404	877	527	365	405	270	466	M12	683	148	535	44	750	313	775	258	185
	100	1571	220	35	555	145	514	441	1056	562	1474	967	527	365	405	410	466	M12	790	148	642	44	824	353	775	258	185

*Overall dimensions (mm)*KRBY5xx

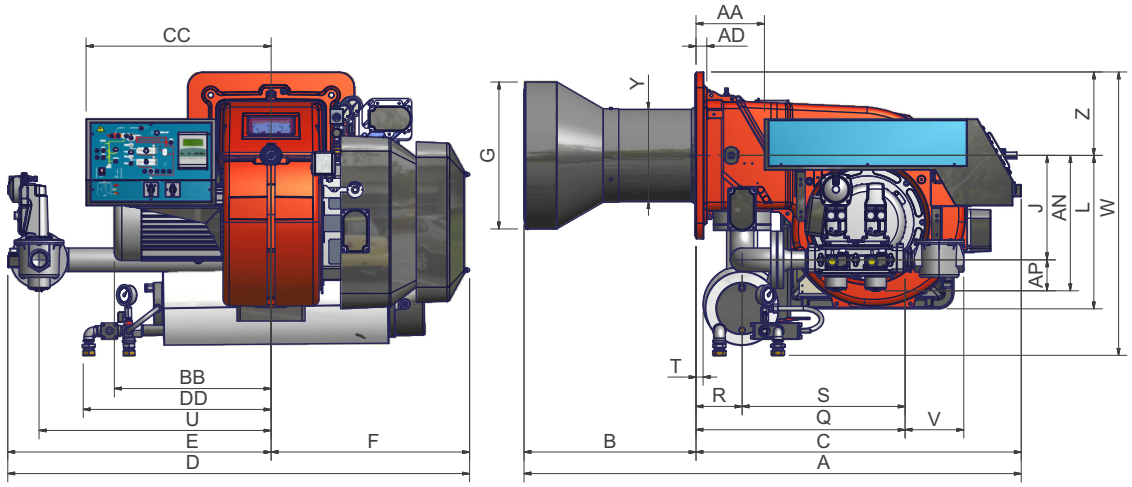

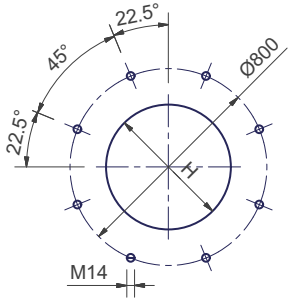

Boiler recommended drilling template

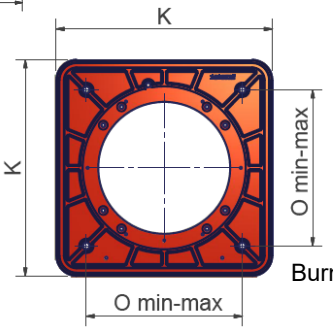

Burner flange

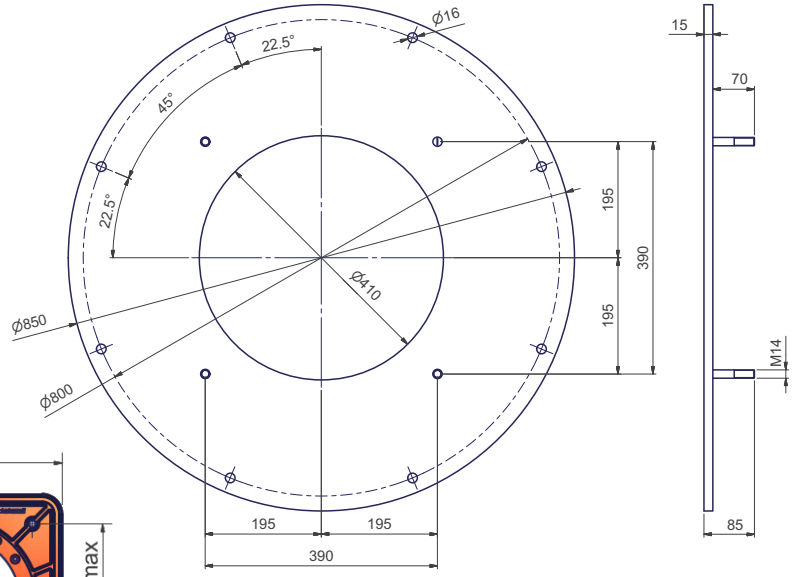

Reccomended counterflange

A COUNTERFLANGE IS MANDATORY:a gasket must be placed between the generator and the counterflange

	DN	A	AA	AD	AN	AP	B	BB	C	CC	D	DD	E	F	G	H	J	K	L	M	O	Q	R	S	T	U	V	W	Y	Z
KRBY512	50	1592	221	35	438	100	593	508	1052	598	1494	589	852	642	500	550	337	540	498	M14	390	675	150	525	38	750	216	917	319	270
	65	1592	221	35	438	118	593	508	1052	598	1494	589	852	642	500	550	337	540	498	M14	390	553	150	403	38	750	292	917	319	270
	80	1592	221	35	466	132	593	508	1052	598	1627	589	985	642	500	550	334	540	498	M14	390	594	150	444	38	857	322	917	319	270
	100	1592	221	35	517	145	593	508	1052	598	1627	589	985	642	500	550	334	540	498	M14	390	674	150	524	38	857	382	917	319	270
KRBY515	50	1608	221	35	438	100	558	508	1052	598	1494	589	852	642	500	550	337	540	498	M14	390	675	150	525	38	750	216	917	319	270
	65	1608	221	35	438	118	558	508	1052	598	1494	589	852	642	500	550	337	540	498	M14	390	553	150	403	38	750	292	917	319	270
	80	1608	221	35	466	132	558	508	1052	598	1627	589	985	642	500	550	334	540	498	M14	390	594	150	444	38	857	322	917	319	270
	100	1608	221	35	517	145	558	508	1052	598	1627	589	985	642	500	550	334	540	498	M14	390	674	150	524	38	857	382	917	319	270
KRBY520	50	1635	221	35	438	100	533	508	1052	598	1494	589	852	642	527	577	337	540	498	M14	390	675	150	525	38	750	216	917	335	270
	65	1635	221	35	438	118	533	508	1052	598	1494	589	852	642	527	577	337	540	498	M14	390	553	150	403	38	750	292	917	335	270
	80	1905	221	35	466	132	533	508	1052	598	1627	589	985	642	527	577	334	540	498	M14	390	594	150	444	38	857	322	917	335	270
	100	1635	221	35	517	145	533	508	1052	598	1627	589	985	642	527	577	334	540	498	M14	390	674	150	524	38	857	382	917	335	270
KRBY525	50	1604	221	35	438	100	552	650	1052	598	1494	589	852	642	572	632	337	540	498	M14	390	675	150	525	38	750	216	917	329	270
	65	1604	221	35	438	118	552	650	1052	598	1494	589	852	642	572	632	337	540	498	M14	390	553	150	403	38	750	292	917	329	270
	80	1604	221	35	466	132	552	650	1052	598	1627	589	985	642	572	632	334	540	498	M14	390	594	150	444	38	857	322	917	329	270
	100	1604	221	35	517	145	552	650	1052	598	1627	589	985	642	572	632	334	540	498	M14	390	674	150	524	38	857	382	917	329	270

Fig. 1 - (3I2MD-02 v1) **Hydraulic diagram**

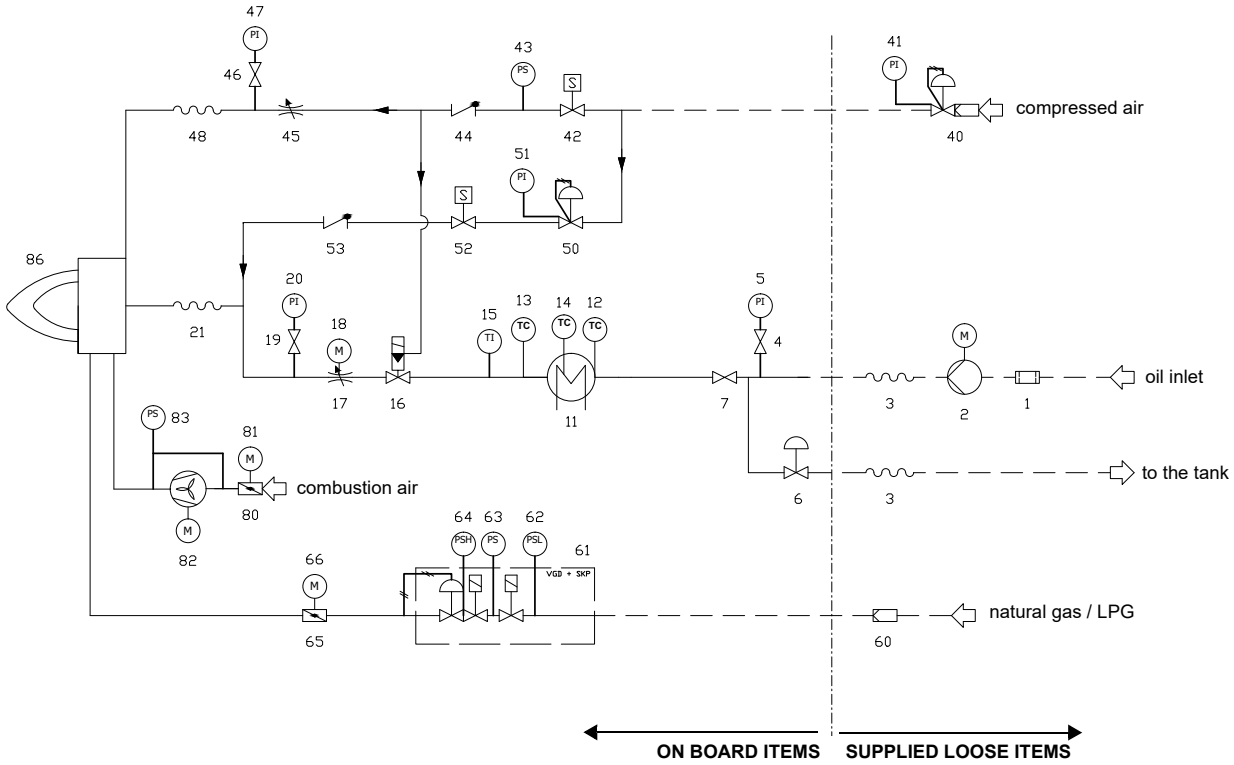

POS	LEGEND
	OIL TRAIN
1	Filter
2	Pump with electromotor
3	Flexible hose
4	Maual valve
5	Pressure gauge
6	Pressure governor
7	Maual valve
11	Electrical preheater tank
12	Temperature probe
13	Temperature probe
14	Temperature probe
16	Pneumatic valve
17	Metering valve with servomotor
18	Actuator
19	Maual valve
20	Pressure gauge
21	Flexible hose
	COMPRESSED AIR TRAIN (ATOMIZATION)
40	Pressure governor with filter
41	Pressure gauge
42	Solenoid valve
43	Pressure switch
44	One-way valve
45	Metering valve
46	Manual valve
47	Pressure gauge
48	Flexible hose
	COMPRESSED AIR TRAIN (PURGE)
50	Pressure governor with filter
51	Pressure gauge
52	Solenoid valve
53	One-way valve
	COMBUSTION AIR TRAIN
80	Air damper
81	Actuator
82	Remote draught fan with electromotor
83	Pressure switch - PA
86	Burner

The following items are out of CIB UNIGAS scope of supply: 77 - 78 - 79

How to read the burner "Performance curve"

To check if the burner is suitable for the boiler to which it must be installed, the following parameters are needed:

- furnace input, in kW or kcal/h (kW = kcal/h / 860);
- backpressure (data are available on the boiler ID plate or in the user's manual).

Example:

Furnace input: 600kW

Backpressure: 4mbar

In the "Performance curve" diagram, draw a vertical line matching the furnace input value and an horizontal line matching the backpressure value. The burner is suitable if the intersection point A is inside the performance curve.

Data are referred to standard conditions: atmospheric pressure at 1013mbar, ambient temperature at 15°C.

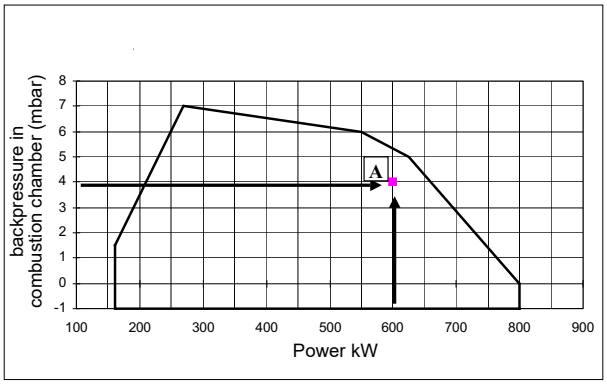

Checking the proper gas train size

To check the proper gas train size, it is necessary to the available gas pressure value upstream the burner's gas valve. Then subtract the backpressure. The result is called **pgas.** Draw a vertical line matching the furnace input value (600kW, in the example), quoted on the x-axis, as far as intercepitng the network pressure curve, according to the installed gas train (DN65, in the example). From the interception point, draw an horizontal line as far as matching, on the y-axis, the value of pressure necessary to get the requested furnace input. This value must be lower or equal to the **pgas** value, calculated before.

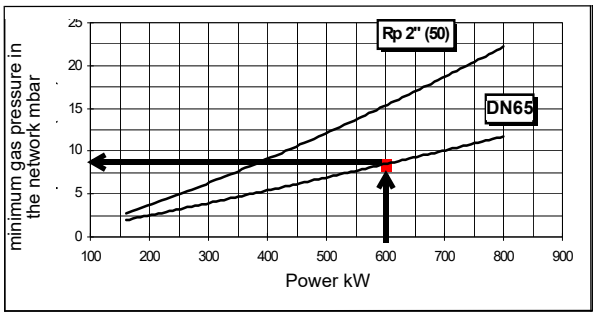

Performance Curves

KPBY91

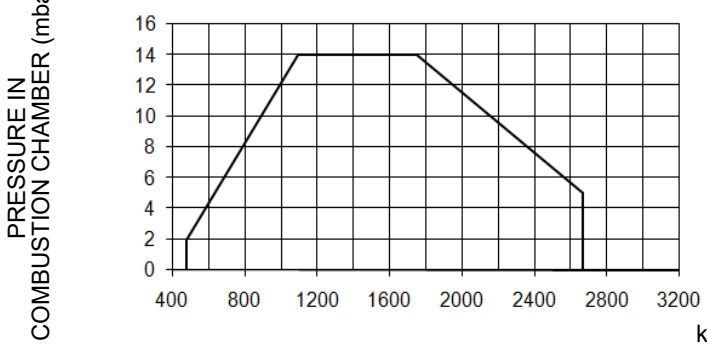

KPBY92

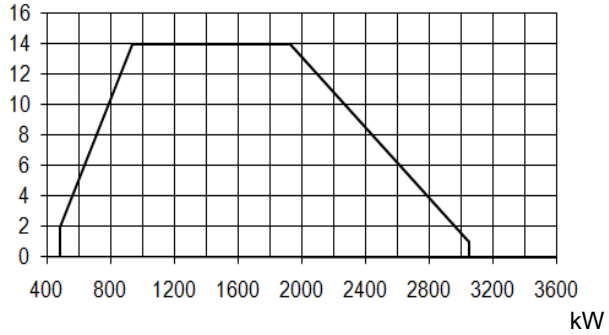

KRBY93

KRBY512

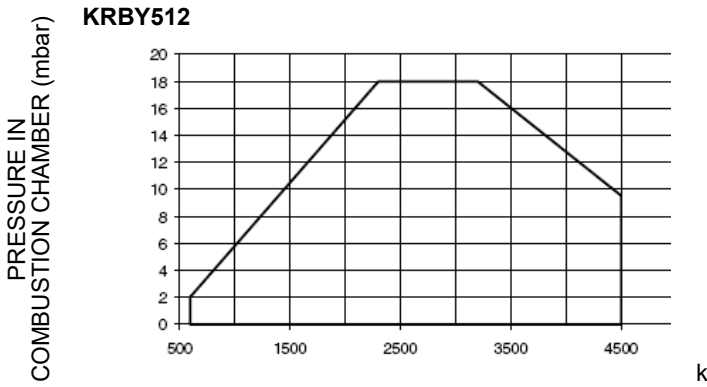

KRBY515

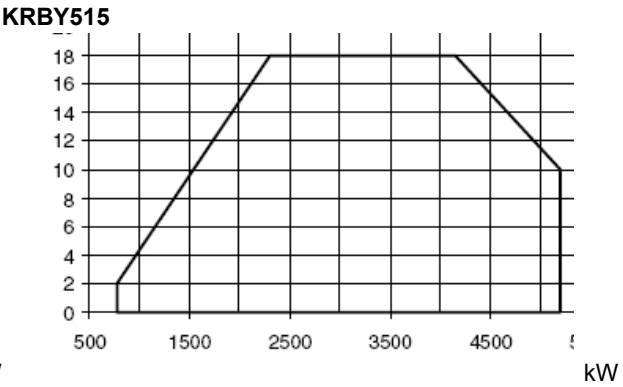

KRBY520

KRBY525

To get the input in kcal/h, multiply value in kW by 860.

Data are referred to standard conditions: atmospheric pressure at 1013mbar, ambient temperature at 15°C

NOTE: The performance curve is a diagram that represents the burner performance in the type approval phase or in the laboratory tests, but does not represent the regulation range of the machine. On this diagram the maximum output point is usually reached by adjsuting the combustion head to its “MAX” position (see paragraph “Adjusting the combustion head”); the minimum output point is reached setting the combustion head to its “MIN” position. During the first ignition, the combustion head is set in order to find a compromise between the burner output and the generator specifications, that is why the minimum output may be different from the Performance curve minimum.

Pressure in the Network / gas flow rate curves

KPBY91

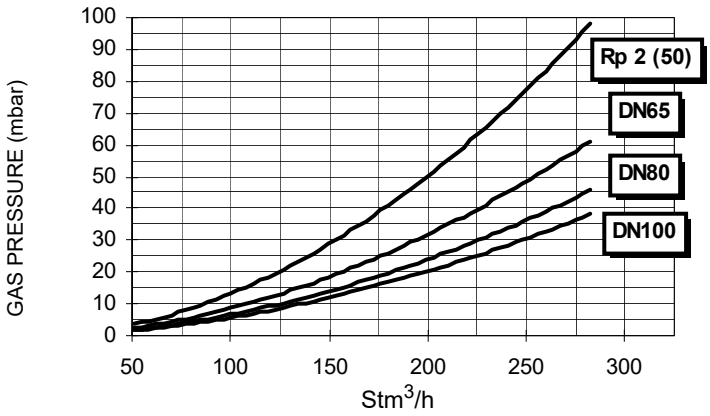

KPBY92

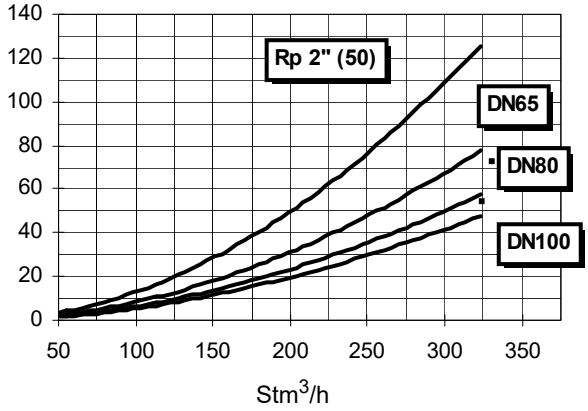

KPBY93

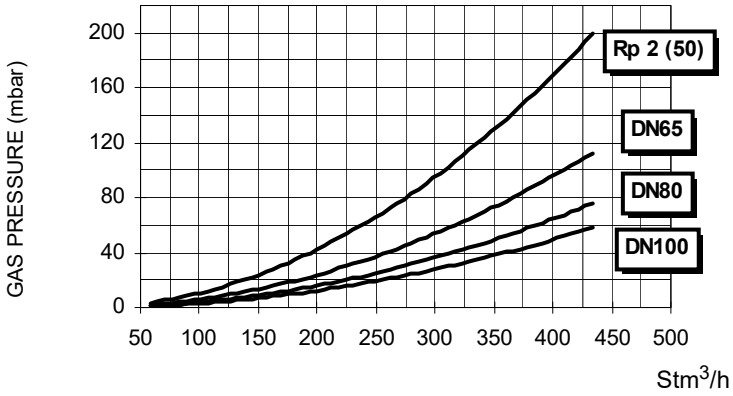

KRBY512

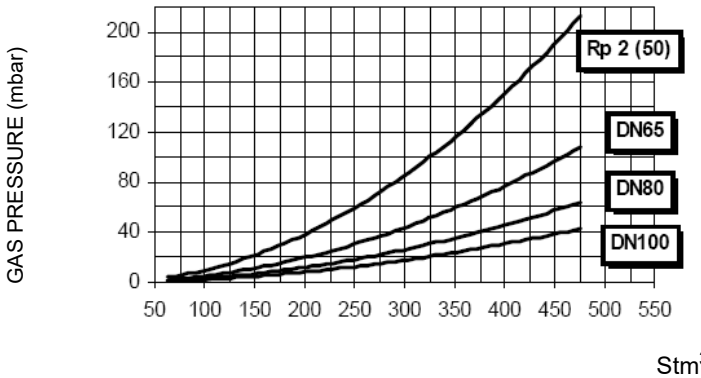

KRBY515

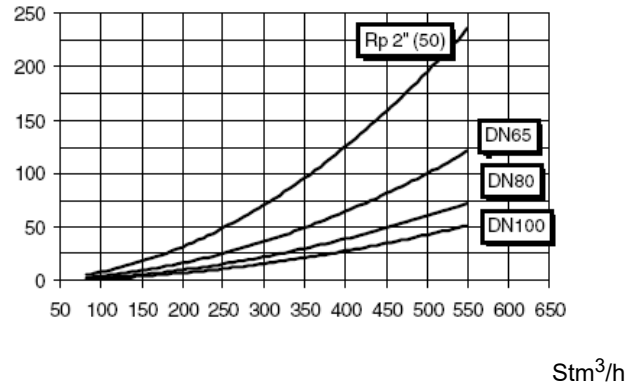

KRBY520

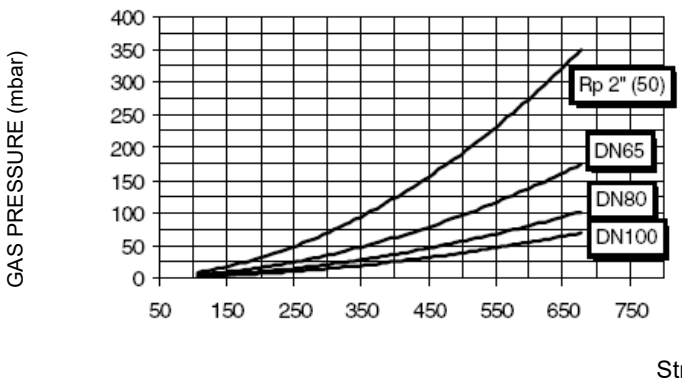

KPBY525

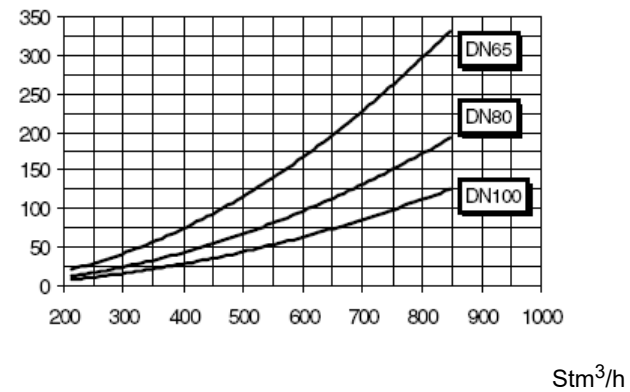

Caution: the gas rate value is quoted on the x-axis, the related network pressure is quoted on the y-axis (pressure value in the combustion chamber is not included). To know the minimum pressure at the gas train inlet, necessary to get the requested gas rate, add the pressure value in the combustion chamber to the value read on the y-axis.

Combustion head gas pressure curves depending on the flow rate

The curves referred to the gas pressure in the combustion head, depending on the gas flow rate, are referred to the burner properly adjusted (percentage of residual O_2 in the flues as shown in the "Recommended combustion values" table and CO in the standard limits). During this stage, the combustion head, the gas butterfly valve and the actuator are at the maximum opening. Refer to Fig. 2, showing the correct way to measure the gas pressure, considering the values of pressure in combustion chamber, surveyed by means of the pressure gauge or taken from the boiler's Technical specifications.

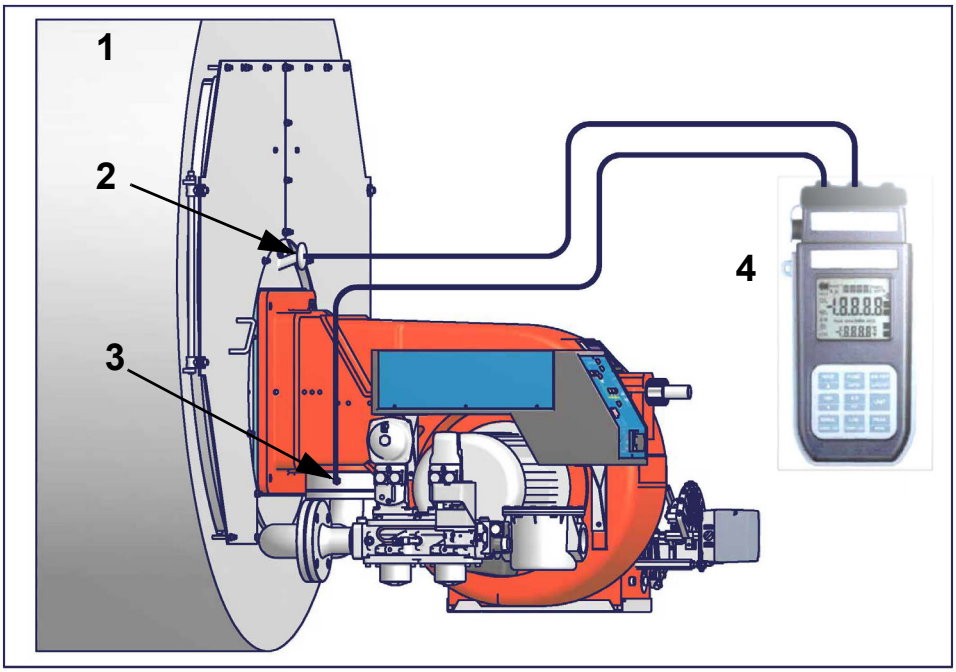

Fig. 2

Note: the figure is indicative only.

Key

1 Generator
2 Pressure outlet on the combustion chamber
3 Gas pressure outlet on the butterfly valve
4 Differential pressure gauge

Measuring the gas pressure in the combustion head

In order to measure the pressure in the combustion head, insert the pressure gauge probes: one into the combustion chamber's pressure outlet to get the pressure in the combustion chamber and the other one into the butterfly valve's pressure outlet of the burner. On the basis of the measured differential pressure, it is possible to get the maximum flow rate: in the pressure - rate curves (showed on the next paragraph), it is easy to find out the burner's output in Stm^3/h (quoted on the x axis) from the pressure measured in the combustion head (quoted on the y axis). The data obtained must be considered when adjusting the gas flow rate.

ATTENTION: THE BURNED GAS RATE MUST BE READ AT THE GAS FLOW METER. WHEN IT IS NOT POSSIBLE, THE USER CAN REFERS TO THE PRESSURE-RATE CURVES AS GENERAL INFORMATION ONLY.

Pressure - rate in combustion head curves

Curves are referred to pressure = 0mbar in the combustion chamber!

KPBY91

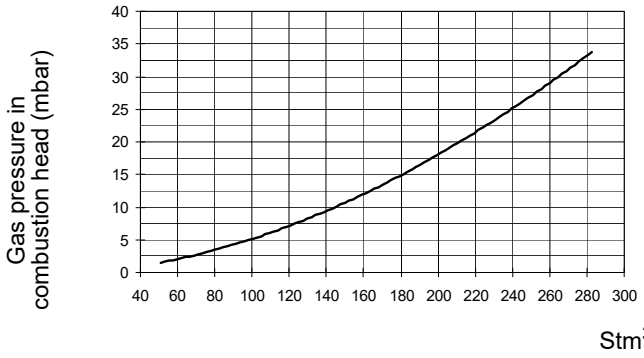

KPBY92

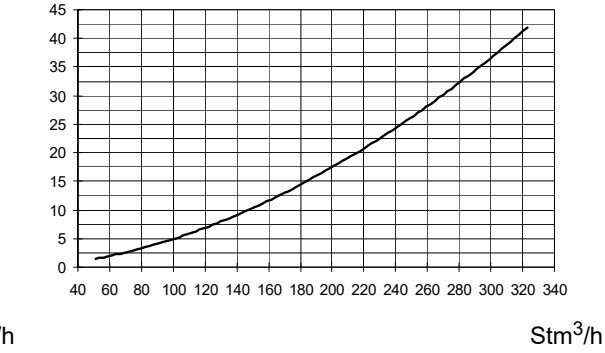

KPBY93

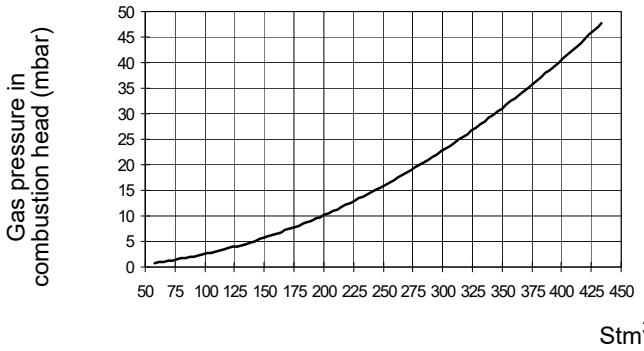

KRBY510

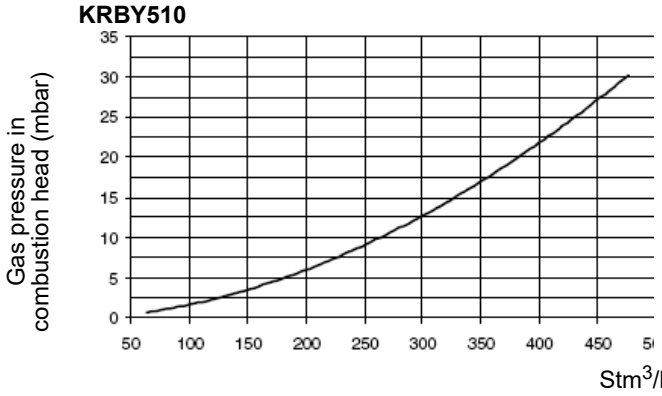

KRBY515

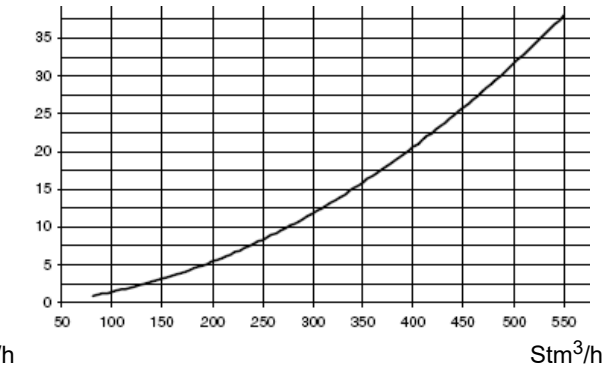

KRBY520

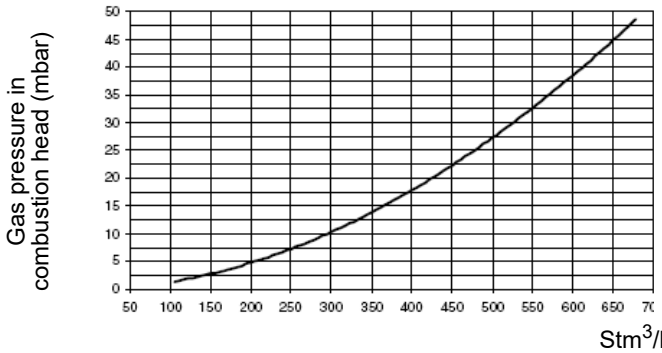

KRBY525

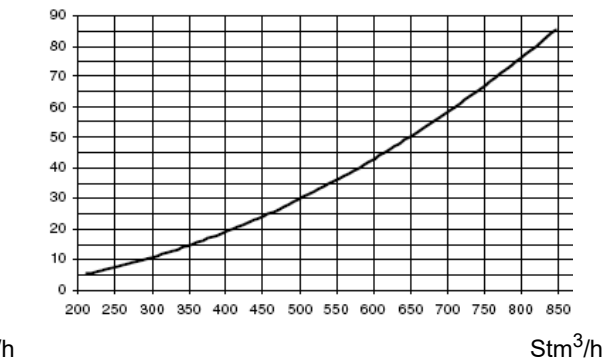

BURNER SAFETY

The burners - and the configurations described below - comply with the regulations in force regarding health, safety and the environment. For more in-depth information, refer to the declarations of conformity that are an integral part of this Manual.

DANGER! The safety elements and devices have been realized to protect from risks deriving from expected use, adjustment and maintenance. Tampering with them, even minimally, and therefore creating dangerous situations for people, property and the surrounding environment, is strictly forbidden.

Residual risks deriving from misuse and prohibitions

The burner has been built in order to make its operation safe; there are, however, residual risks.

Do not touch any mechanical moving parts with your hands or any other part of your body. Injury hazard
Do not touch any parts containing fuel (i.e. tank and pipes). Scalding hazard
Do not use the burner in situations other than the ones provided for in the data plate.
Do not use fuels other than the ones stated.
Do not use the burner in potentially explosive environments.
Do not remove or by-pass any machine safety devices.
Do not remove any protection devices or open the burner or any other component while the burner is running.
Do not disconnect any part of the burner or its components while the burner is running.
Untrained staff must not modify any linkages.

After any maintenance, it is important to restore the protection devices before restarting the machine.
All safety devices must be kept in perfect working order.
Personnel authorized to maintain the machine must always be provided with suitable protections.

ATTENTION: while running, the parts of the burner near the generator (coupling flange) are subject to overheating. Where necessary, avoid any contact risks by wearing suitable PPE.

PART II: INSTALLATION

MOUNTING AND CONNECTING THE BURNER

Packing

The burners are despatched in wooden crates whose dimensions are:

1746mm x 1440mm x 1400mm (L x P x H)

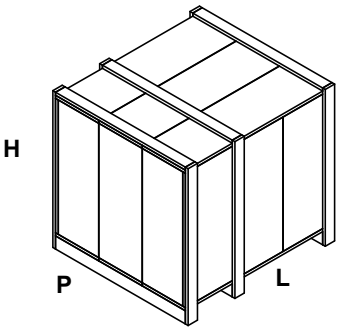

Fig. 1

Packing cases of this type are affected by humidity and are not suitable for stacking.

The following are placed in each packing case:

- burner with gas train detached;
- second combustion head;
- flexible hoses
- envelope containing this manual.

To get rid of the burner's packing and in the event of scrapping of the latter, follow the procedures laid down by current laws on disposal of materials.

Handling the burner

WARNING! The handling operations must be carried out by specialised and trained personnel. If these operations are not carried out correctly, the residual risk for the burner to overturn and fall down still persists.

To move the burner, use means suitable to support its weight (see paragraph "Technical specifications").

The unpacked burner must be lifted and moved only by means of a fork lift truck.

The burner is mounted on a stirrup provided for handling the burner by means of a fork lift truck: the forks must be inserted into the A anb B ways. Remove the stirrup only once the burner is installed to the boiler.

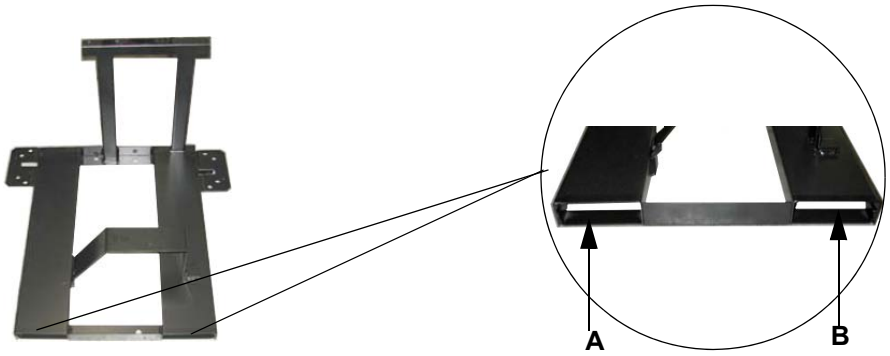

Set the upper side of the burner flange in a horizontal position, in order to obtain the correct inclination of the pre-heating tank

Key

1 Burner flange (upper side indicated)

2 Bracket

3 Pre-heating tank on the burner

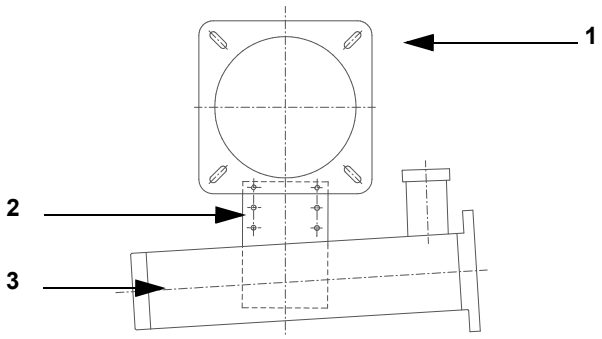

Fitting the burner to the boiler

To install the burner into the boiler, proceed as follows:

1 make a hole on the closing door of the combustion chamber as described on paragraph “Overall dimensions”)
2 place the burner to the boiler: lift it up and handle it according to the procedure described on paragraph “Handling the burner”;
3 place the 4 stud bolts (5) on boiler’s door, according to the burner drilling template described on paragraph “Overall dimensions”;
4 fasten the 4 stud bolts;
5 place the gasket on the burner flange;
6 install the burner into the boiler;
7 fix the burner to the stud bolts, by means of the fixing nuts, according to the next picture.
8 After fitting the burner to the boiler, ensure that the gap between the blast tube and the refractory lining is sealed with appropriate insulating material (ceramic fibre cord or refractory cement).

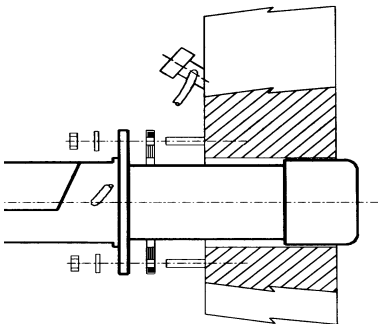

Keys

1 Burner
2 Fixing nut
3 Washer
4 Sealing gasket
5 Stud bolt
7 Blast tube

Matching the burner to the boiler

The burners described in this manual have been tested with combustion chambers that comply with EN676 regulation and whose dimensions are described in the diagram . In case the burner must be coupled with boilers with a combustion chamber smaller in diameter or shorter than those described in the diagram, please contact the supplier, to verify that a correct matching is possible, with respect of the application involved. To correctly match the burner to the boiler verify the type of the blast tube . Verify the necessary input and the pressure in combustion chamber are included in the burner performance curve; otherwise the choice of the burner must be revised consulting the burner manufacturer. To choose the blast tube lenght follow the instructions of the boiler manufacturer. In absence of these consider the following:

- Cast-iron boilers, three pass flue boilers (with the first pass in the rear part): the blast tube must protrude no more than **Dist** = 100 mm into the combustion chamber. (Fig. 2)
- Pressurised boilers with flame reversal: in this case the blast tube must penetrate **Dm** 50 ÷ 100 mm into combustion chamber in respect to the tube bundle plate.(Fig. 3)

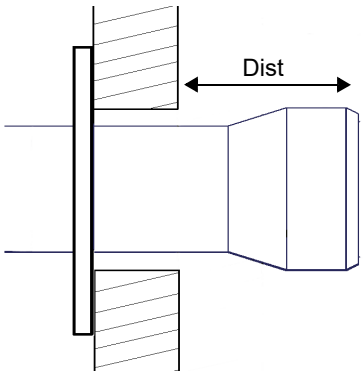

Fig. 2

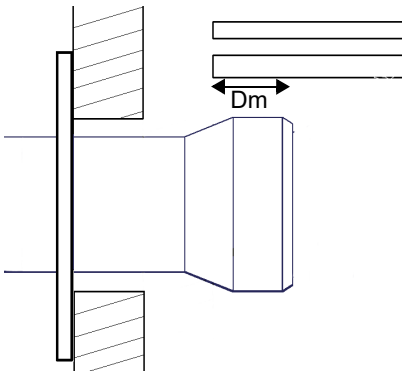

Fig. 3

GAS TRAIN CONNECTIONS

WARNING: before executing the connections to the gas pipe network, be sure that the manual cutoff valves are closed.

ATTENTION: it is recommended to mount filter and gas valves to avoid that extraneous material drops inside the valves, during maintenance and cleaning operation of the filters (both the filters outside the valves group and the ones built-in the gas valves).

ATTENTION: once the gas train is mounted, the gas proving test must be performed, according to the procedure set by laws in force.

CAUTION: The direction of gas flow must follow the arrow on the body of the components mounted on the gas ramp (valves, filters, gaskets...).

NOTE: *the bellows unit, the manual cutoff valve and the gaskets are not part of the standard supply*

Following the "Hydraulic Schematics" section, the figure shows the components fitted by the installer.

Keys

1	Gas filter
3	Gas valves group
9	Bellows unit
10	Manual valve
11	Gasket(a, b, c, d)

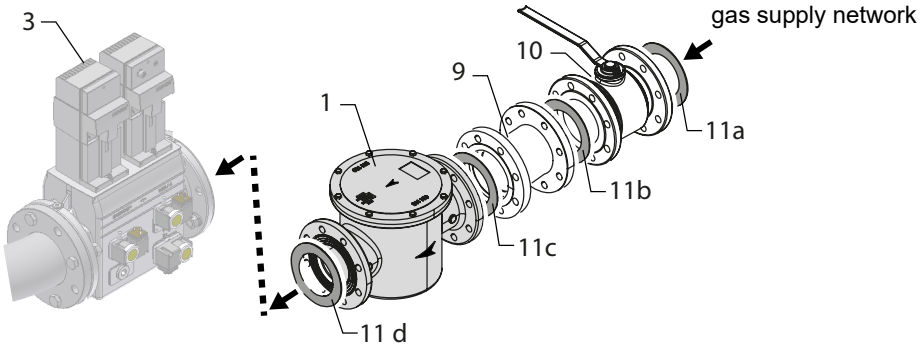

Procedure to install the double gas valve unit: **two (2) gas flanges are required; they may be threaded or flanged depending on size**

- **first step: install the flanges to prevent entry of foreign bodies in the gas line**
- **on the gas pipe, clean the already assembled parts and then install the valve unit check gas flow direction: it must follow the arrow on the valve body**
- **VGD20: make sure the O-rings are correctly positioned between the flanges and the valve**

In all cases:

- ensure that the gaskets are correctly positioned between the flanges;
- fasten all the components with screws, according to the following diagrams:
- make sure bolts on the flanges are properly tightened
- check that the connections of all components are leak .

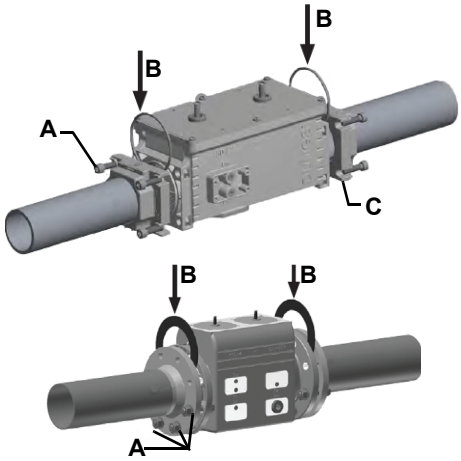

CAUTION: Use seals suitable for the gas used.

WARNING: Slowly open the fuel cock to avoid breaking the pressure regulator.

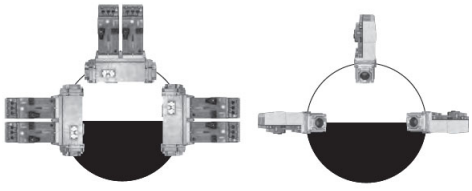

Gas Filter (if provided)

The gas filters remove the dust particles that are present in the gas, and prevent the elements at risk (e.g.: burner valves, counters and regulators) from becoming rapidly blocked. The filter is normally installed upstream from all the control and on-off devices.

ATTENTION: it is reccomended to install the filter with gas flow parallel to the floor in order to prevent dust fall on the safety valve during maintenance operation.

Once the train is installed, connect the gas valves group and pressure switches plugs.

MultiBloc MB-DLE - *Assembling the gas train*

Mounting

1 Mount flange onto tube lines: use appropriate sealing agent
2 Insert MB-DLE: note position of O rings
3 Remove MultiBloc between the threaded flanges
4 After installation, perform leakage and functional test
5 Disassembly in reverse order

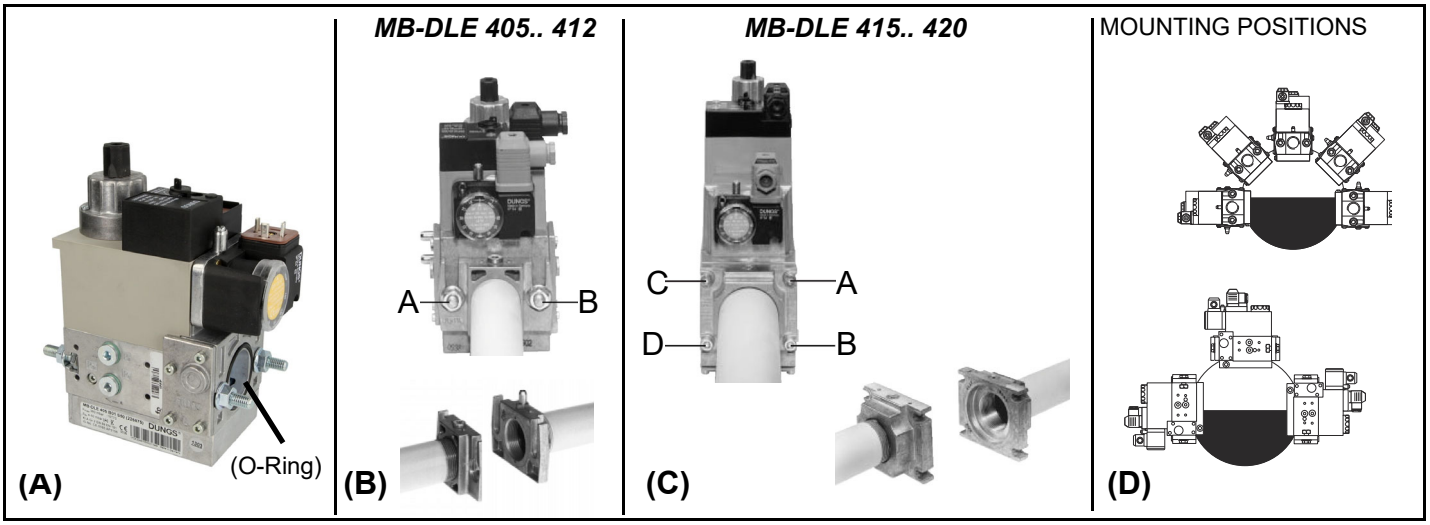

DUNGS MBE

Components and position of pressure switches

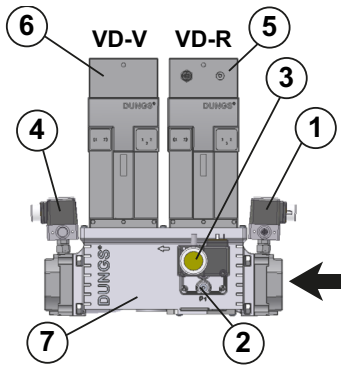

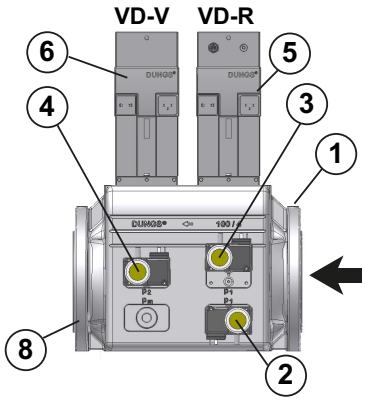

1 PGMIN minimum gas pressure switch
2 PGMIN minimum gas pressure switch (alternative to 1)
3 PGCP leakage control gas pressure switch
4 PGMAX maximum gas pressure switch
5 Actuator with integrated pressure stabiliser
6 On-Off actuator
7 Valve body (Threaded)
8 Valve body (Flange)

On equipment versions Facile VD-R must be installed upstream valve

PS pressure sensor connection to VD-R actuator and gas train

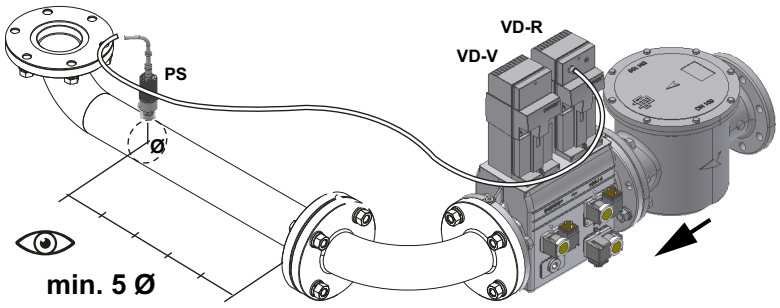

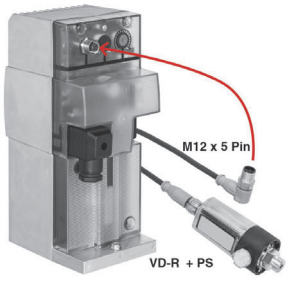

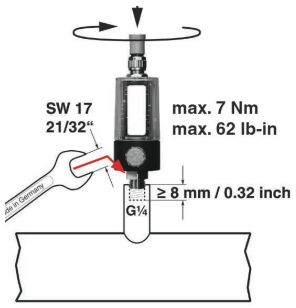

Attention: In the case of the MBE... valve, a pressure limit switch downstream of the safety valve is mandatory.

Pressure taps MultiBloc MBE

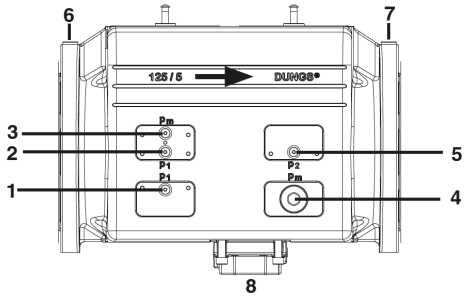

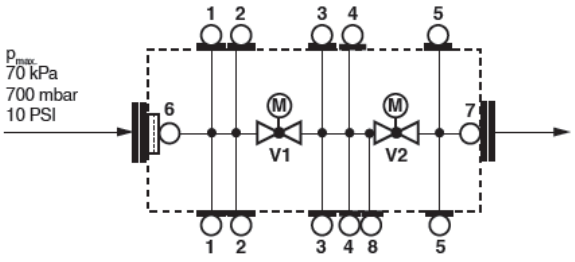

1, 2, 3, 5 Sealing plug G1/8 ISO 228
4 G3/4 for system accessories
6, 7 Sealing plug G1/4 ISO 228
8 For version VB…L only: connection for vent line
VB-2½L=1¼"NPT
VB-3L=1½"NPT
VB-4L=2"NPT
VB-5L=2"NPT

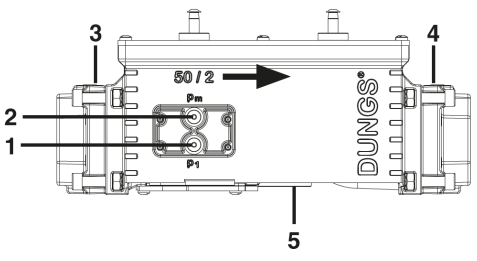

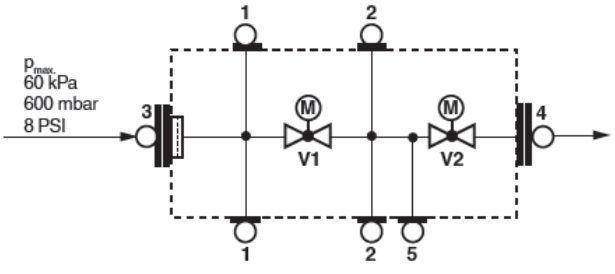

1, 2, 3, 4 Sealing plug G1/8 ISO 228
5 Locking screw
For version VB-2L only: connection for vent line **NPT 1**

Siemens VGD20.. e VGD40..

Components and position of pressure switches

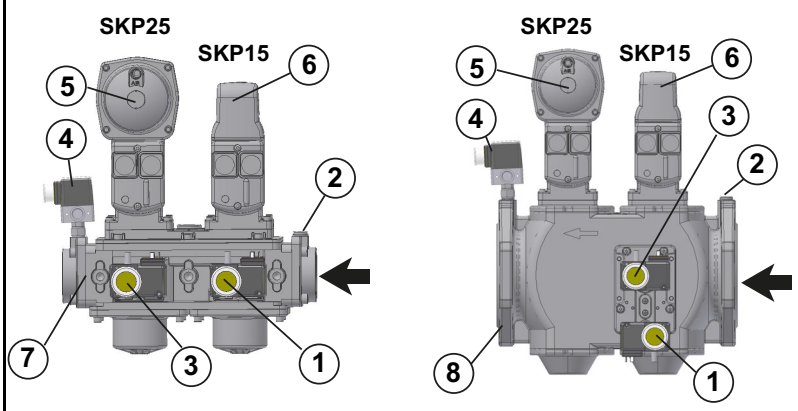

1 PGMIN minimum gas pressure switch
2 PGMIN minimum gas pressure switch (alternative to 1)
3 PGCP leakage control gas pressure switch
4 PGMAX maximum gas pressure switch
5 Actuator with integrated pressure stabiliser
6 On-Off actuator
7 Valve body (Threaded)
8 Valve body (Flange)

Connection of actuator SKP2... to gas train

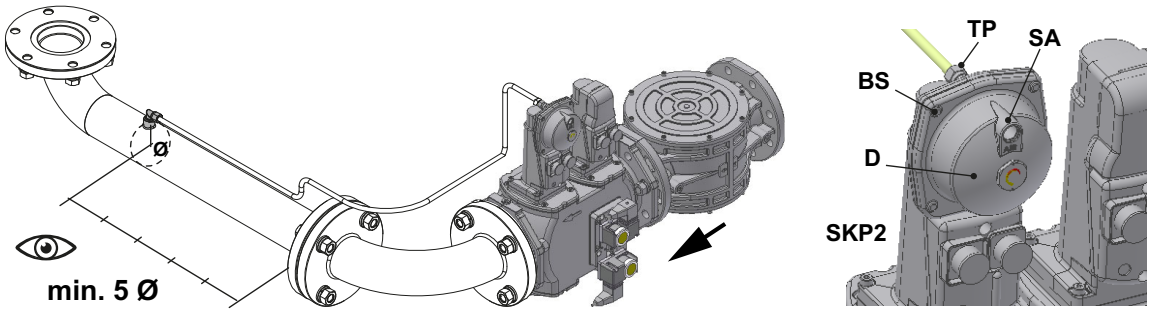

Siemens SKP2.. (pressure governor)

- Connect the reference gas pipe (**TP** in figure; 8mm-external size pipe supplied loose), to the gas pressure nipples placed on the gas pipe, downstream the gas valves: gas pressure must be measured at a distance that must be at least 5 times the pipe size.
- Leave the blowhole free (**SA** in figure). Should the spring fitted not permit satisfactory regulation, ask one of our service centres for a suitable replacement.

- D: pressure adjustment spring seat

WARNING: removing the four screws BS causes the device to be unserviceable!

version with SKP2 (built-in pressure stabilizer)Siemens VGD../VRD.. SKPx5 (Auxiliary-optional micro switch)Gas valve

If the auxiliary microswitch (POC) is required, a dedicated actuator, different from the one usually supplied, must be ordered. The connection is shown in the figure.

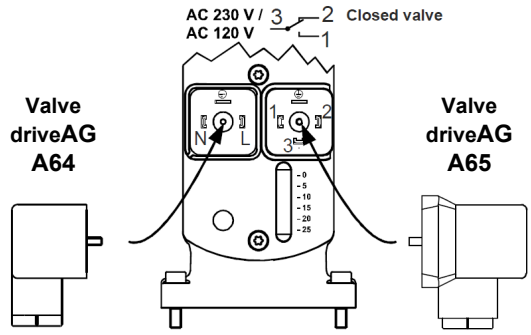

Valve driveAGA64 -
Plug connection ON-OFF
End of stroke

End of stroke
Plug connection **(POC)**

Siemens VGD *Pressure taps*

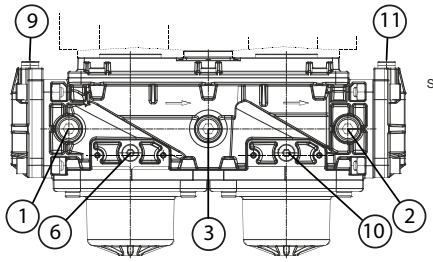

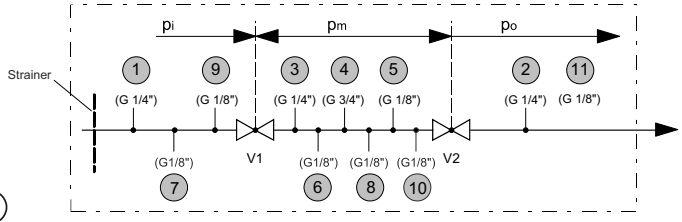

Legend

pi Inlet pressure

pm Pressure between valves

po Outlet pressure

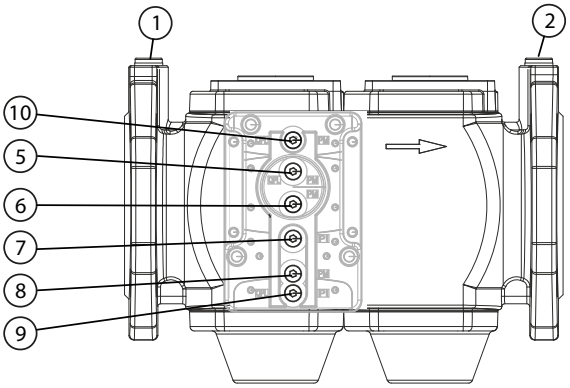

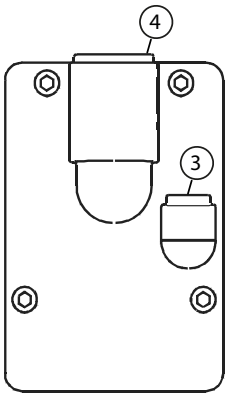

Gas Filter (if provided)

The gas filters remove the dust particles that are present in the gas, and prevent the elements at risk (e.g.: burner valves, counters and regulators) from becoming rapidly blocked. The filter is normally installed upstream from all the control and on-off devices.

ATTENTION: it is reccomended to install the filter with gas flow parallel to the floor in order to prevent dust fall on the safety valve during maintenance operation.

OIL TRAIN CONNECTIONS

The pump provided with the burner must be installed according to the hydraulic diagram.

Pumps	capacity [l/h]	power [kW]	speed [rpm]	connection	max outlet pressure [bar]	max inlet pressure (bar)
Kral KF 10 BCB	500	0,37	1500	DN25	10	2
Kral KF 15 BCB	800	0,55	1500	DN25	10	2
Kral KF 20 BCB	1100	0,55	1500	DN25	10	2
Cucchi FMG25	1400	0.75	1500	-	10	2

For further details see the manifacturer documentation.

About the use of fuel pumps

- Do not use fuel with additives to avoid the possible formation over time of compounds which may deposit between the gear teeth, thus obstructing them.
- After filling the tank, wait before starting the burner. This will give any suspended impurities time to deposit on the bottom of the tank, thus avoiding the possibility that they might be sucked into the pump.
- On initial commissioning a "dry" operation is foreseen for a considerable length of time (for example, when there is a long suction line to bleed). To avoid damages inject some lubrication oil into the vacuum inlet.
- Care must be taken when installing the pump not to force the pump shaft along its axis or laterally to avoid excessive wear on the joint, noise and overloading the gears.
- Pipes should not contain air pockets. Rapid attachment joint should therefore be avoided and threaded or mechanical seal junctions preferred. Junction threads, elbow joints and couplings should be sealed with removable sg component. The number of junctions should be kept to a minimum as they are a possible source of leakage.
- Do not use PTFE tape on the suction and return line pipes to avoid the possibility that particles enter circulation. These could deposit on the pump filter or the nozzle, reducing efficiency. Always use O-Rings or mechanical seal (copper or aluminium gaskets) junctions if possible.
- An external filter should always be installed in the suction line upstream the fuel unit.

Connecting the pump

According to the pump provided, proceed as follows:

1 emove the closing nuts A and B on the inlet and return connections of the pump;

2 connect the pump **being careful to avoid exchanging the lines**: see the arrows marked on the pump.

For further information, refer to the technical documentation of the pump.

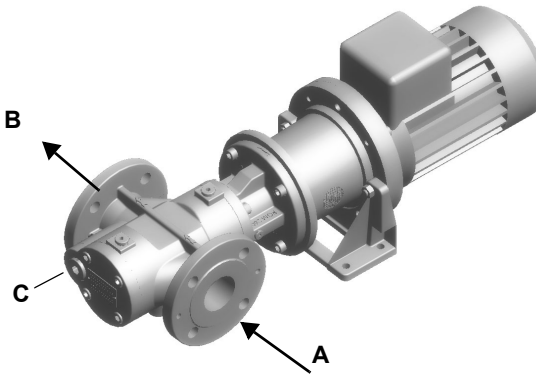

Fig. 4 - Kral

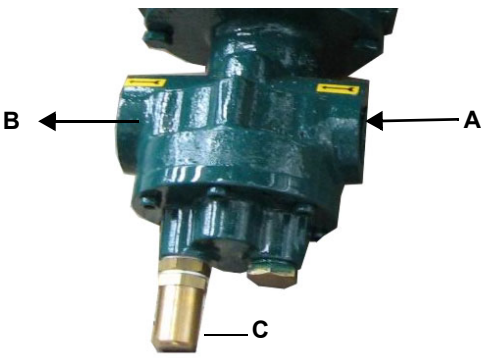

Fig. 5 - Cucchi

Legend
A - Inlet
B - Outlet
C - Overflow pressure adjusting screw

Suntec TV Pressure governor

Pressure adjustment

Remove cap-nut 1 and the gasket 2, unscrew the lock nut 4. To increase pressure, twist adjusting screw 3 clockwise.

To decrease the pressure, twist screw counterclockwise. Tight the lock nut 4, refit the gasket 2 and the cap nut 1.

Key

1 Cap nut
2 Gasket
3 Adjusting screw
4 Lock nut
5 Gasket

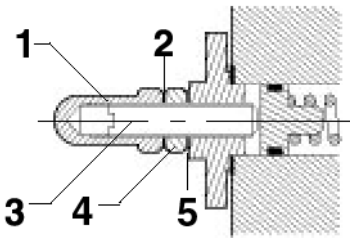

Fig. 6

Connecting the oil flexible hoses to the burner

To connect the flexible oil hoses to the pump, proceed as follows, according to the pump provided:

1 remove the closing nuts **H** (on the heater) and **R** (on the oil pressure governor) of the inlet and return connections;

2 screw the rotating nut of the two flexible hoses on the burner **being careful to avoid exchanging the inlet and return lines**: see the arrows marked that show the inlet and the return.

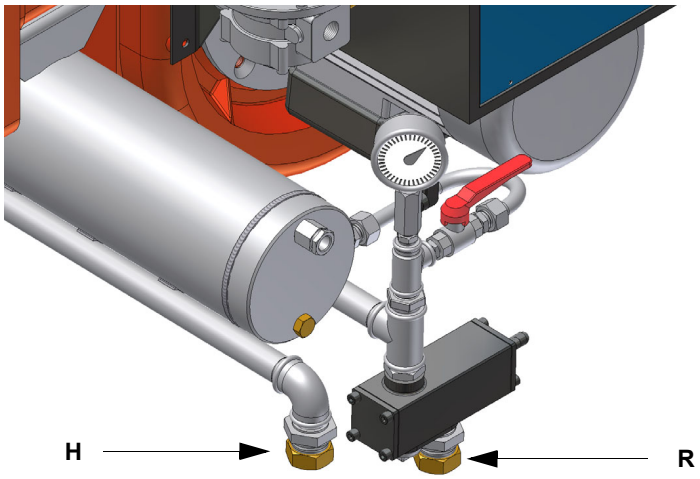

Connecting the compressed air hoses

To connect the compressed air supply, refer to the following pictures

Flow governor with filter

ELECTRICAL CONNECTIONS

WARNING! Respect the basic safety rules. make sure of the connection to the earthing system. do not reverse the phase and neutral connections. fit a differential thermal magnet switch adequate for connection to the mains.

WARNING! before executing the electrical connections, pay attention to turn the plant's switch to OFF and be sure that the burner's main switch is in 0 position (OFF) too. Read carefully the chapter "WARNINGS", and the "Electrical connections" section.

ATTENTION: Connecting electrical supply wires to the burner teminal block MA, be sure that the ground wire is longer than phase and neutral ones.

WARNING: (only for double stage and progressive burners) The burner is provided with an electrical bridge between terminals 6 and 7; when connecting the high/low flame thermostat, remove this bridge before connecting the thermostat.

To execute the electrical connections, proceed as follows:

1 remove the cover from the electrical board, unscrewing the fixing screws;
2 execute the electrical connections to the supply terminal board as shown in the attached wiring diagrams;
3 check the direction of the fan motor (see next paragraph);
4 refit the panel cover.

WARNING:It is recommended to install a shunt trip disconnect switch that acts on the preheater unit supply line and avoids the oil overheating / resistance damage in case of a malfunction of the resistance contactor. Inside the electric board a free contact is provided (terminals 507 - 508) for this purpose.

Note on elecrtical supply

If the power supply to the burner is 230V three-phase or 230V phase-phase (without a neutral), with the Siemens control box, between the terminal 2 (terminal X3-04-4 in case of LMV2x, LMV3x, LMV5x, LME7x) on the board and the earth terminal, an RC Siemens RC466890660 filter must be inserted.

Key
C - Capacitor (22nF/250V)
LME / LMV - Siemens control box
R - Resistor (1MΩ)
M - Terminal 2 (LGB,LMC,LME), terminal X3-04-4 (LMV2x, LMV3x, LMV5, LME7x)
RC466890660 - RC Siemens filter

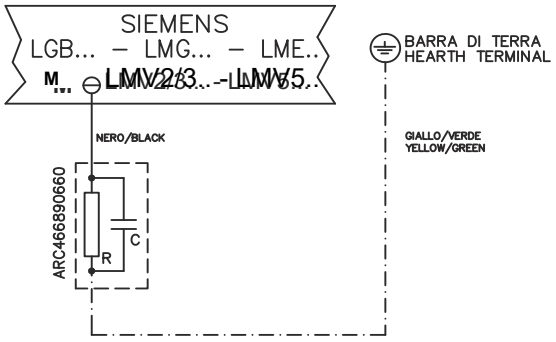

For LMV5 control box, please refer to the clabeling recommendations avaible on the Siemens CD attached to the burner

Rotation of electric motor

Once the electrical connection of the burner is executed, remember to check the rotation of the electric motor. The motor should rotate according to the "arrow" symbol on the body. In the event of wrong rotation, reverse the three-phase supply and check again the rotation of the motor.

CAUTION: check the motor thermal cut-out adjustment

NOTE: the burners are supplied for three-phase 380 V or 400 V supply, and in the case of three-phase 220 V or 230 V supply it is necessary to modify the electrical connections into the terminal box of the electric motor and replace the overload tripped relay.

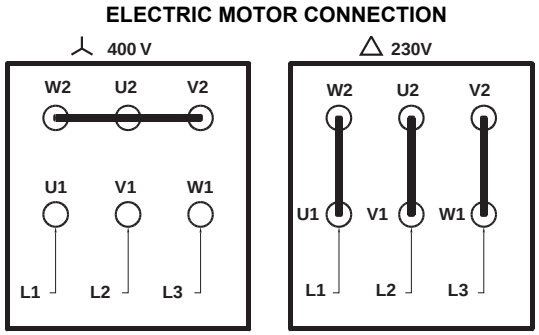

Connecting the oil heating resistors

2.4 - 4.5 kW

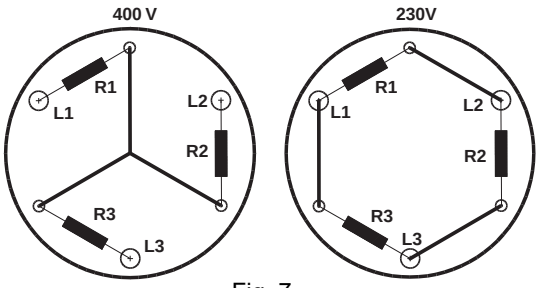

Fig. 7

8 - 12 kW

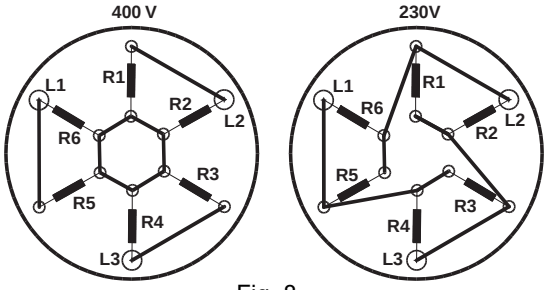

Fig. 8

18 - 24 kW

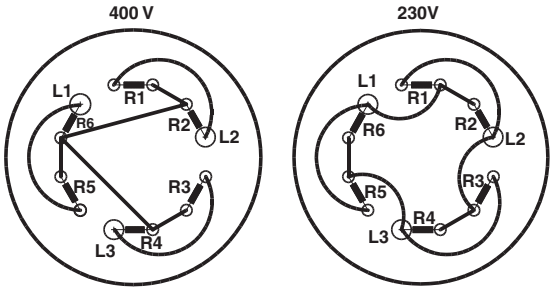

Fig. 9

RECOMMENDATIONS TO DESIGN HEAVY OIL FEEDING PLANTS

This paragraph is intended to give some suggestions to make feeding plants for heavy oil burners. To get a regular burner operation, it is very important to design the supplying system properly. Here some suggestions will be mentioned to give a brief description.

The term “heavy oil” is generic and summarises several chemical-physical properties, above all viscosity. The excessive viscosity makes the oil impossible to be pumped, so it must be heated to let it flow in the pipeline; because of the low-boiling hydrocarbons and dissolved gases, the oil must be also pressurised. The pressurisation is also necessary to feed the burner pump avoiding its cavitation because of the high suction at the inlet. The supplying system scope is to pump and heat oil.

The oil viscosity is referred in various unit measures; the most common are: °E, cSt, Saybolt and Redwood scales. Table 3 shows the-various unit convertions (e.g.: 132 cSt viscosity corresponds to 17.5°E viscosity).

The diagram in Fig. A shows how the heavy oil viscosity changes according to its temperature.

Example: an oil with 22°E viscosity at 50°C once heated to 100°C gets a 3 °E viscosity.

As far as the pumping capability, it depends on the type of the pump that pushes the oil even if on diagram in Fig. B a generic limit is quoted at about 100 °E, so it is recommended to refer to the specifications of the pump provided.

Usually the oil minimum temperature at the oil pump inlet increases as viscosity does, in order to make the oil easy to pump. Referring to the diagram on Fig. A, it is possible to realise that to pump an oil with 50°E viscosity at 50°C, it must be heated at about 80°C.

Pipe heating system

Pipe heating system must be provided, that is a system to heat pipes and plant components to mantain the viscosity in the pumping limits. Higher the oil viscosity and lower the ambient temperature, more necessary the pipe heating system.

Inlet minimum pressure of the pump (both for supplying system and burner)

A very low pressure leads to cavitation (signalled by its peculiar noise): the pump manifacturer declares the minimum value. Therefore, check the pump technical sheets.

By increasing the oil temperature, also the minimum inlet pressure at the pump must increase, to avoid the gassification of the oil low-boiling products and the cavitation. The cavitation compromises the burner operation, it causes the pump to break too. The diagram on Fig. B roughly shows the inlet pump pressure according to the oil temperature.

Indicative diagram showing the oil temperature at burner pump inlet vs. oil viscosity

Example: if the oil has a 50°E @ 50°C viscosity, the oil temperature at the pump inlet should be 80°C (see diagram).

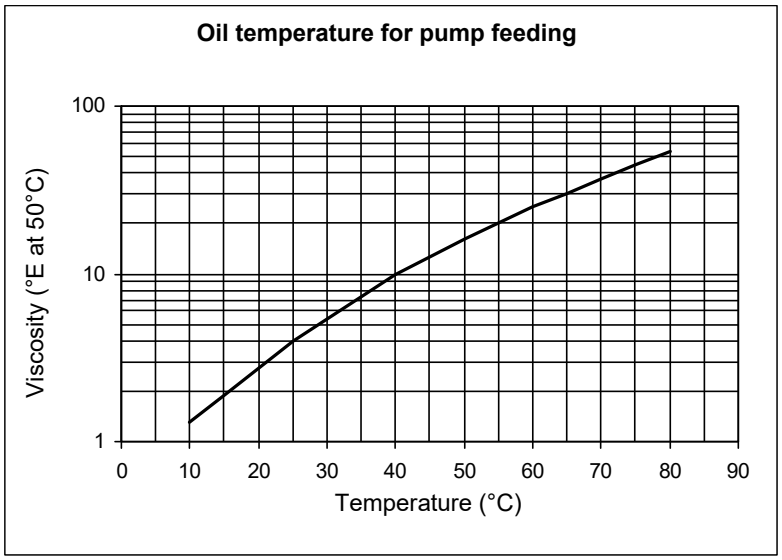

Fig. A

Pump operating maximum pressure (both for the supplying system and burner)

Remember that pumps and all the system components through which the oil circulates, feature an upper limit. Always read the technical documentation for each component. Schemes on Fig. B are taken from UNI 9248 "liquid fuel feeding lines from tank to burner" standard and show how a feeding line should be designed. For other countries, see related laws in force. The pipe dimensioning, the execution and the winding dimensioning and other construcitve details must be provided by the installer.

Indicative diagram showing the oil pressure according to its temperature

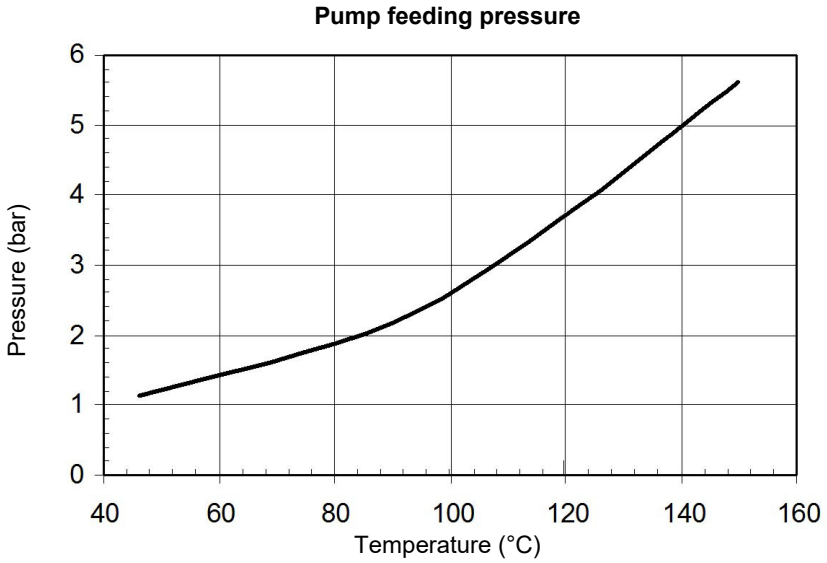

Fig. B

Adjusting the supplying oil ring

According to the heavy oil viscosity used, in the table below indicative temperature and pressure values to be set are shown.

Note: the temperature and pressure range allowed by the supplying ring components must be checked in the specifications table of the components themselves.

HEAVY OIL VISCOSITY AT 50 °C		**PIPELINE PRESSURE**	**PIPELINE TEMPERATURE**
cSt (°E)		**bar**	**°C**
	< 50 (7)	1- 2	20
> 50 (7)	< 110 (15)	1- 2	50
> 110 (15)	< 400 (50)	1- 2	65
> 400 (50)	< 4000 (530)	1- 2	100

Tab. 1 - Supply pipeline hydraulic scheme 3ID0024, pump n.4

ATTENTION: Atomizing air pressure is tipically set at 0.1 ÷ 0.3 bar lower than oil pressure (RBY1025/1030).
Atomizing air pressure is tipically set at 0.5 ÷ 1 bar lower than oil pressure (RBY1040).

Viscosity units conversion table

Cinematics viscosity Centistokes (cSt)	Engler Degrees (°E)	Saybolt Seconds Universal (SSU)	Saybolt Seconds Furol (SSF)	Redwood Seconds no.1 (Standard)	Redwood Seconds no..2 (Admiralty)
1	1	31	--	29	--
2.56	1.16	35	--	32.1	--
4.3	1.31	40	--	36.2	5.1
7.4	1.58	50	--	44.3	5.83
10.3	1.88	60	--	52.3	6.77
13.1	2.17	70	12.95	60.9	7.6
15.7	2.45	80	13.7	69.2	8.44
18.2	2.73	90	14.44	77.6	9.3
20.6	3.02	100	15.24	85.6	10.12
32.1	4.48	150	19.3	128	14.48
43.2	5.92	200	23.5	170	18.9
54	7.35	250	28	212	23.45
65	8.79	300	32.5	254	28
87.6	11.7	400	41.9	338	37.1
110	14.6	500	51.6	423	46.2
132	17.5	600	61.4	508	55.4
154	20.45	700	71.1	592	64.6
176	23.35	800	81	677	73.8
198	26.3	900	91	762	83
220	29.2	1000	100.7	896	92.1
330	43.8	1500	150	1270	138.2
440	58.4	2000	200	1690	184.2
550	73	2500	250	2120	230
660	87.6	3000	300	2540	276
880	117	4000	400	3380	368
1100	146	5000	500	4230	461
1320	175	6000	600	5080	553
1540	204.5	7000	700	5920	645
1760	233.5	8000	800	6770	737
1980	263	9000	900	7620	829
2200	292	10000	1000	8460	921
3300	438	15000	1500	13700	--
4400	584	20000	2000	18400	--

Tab. 2

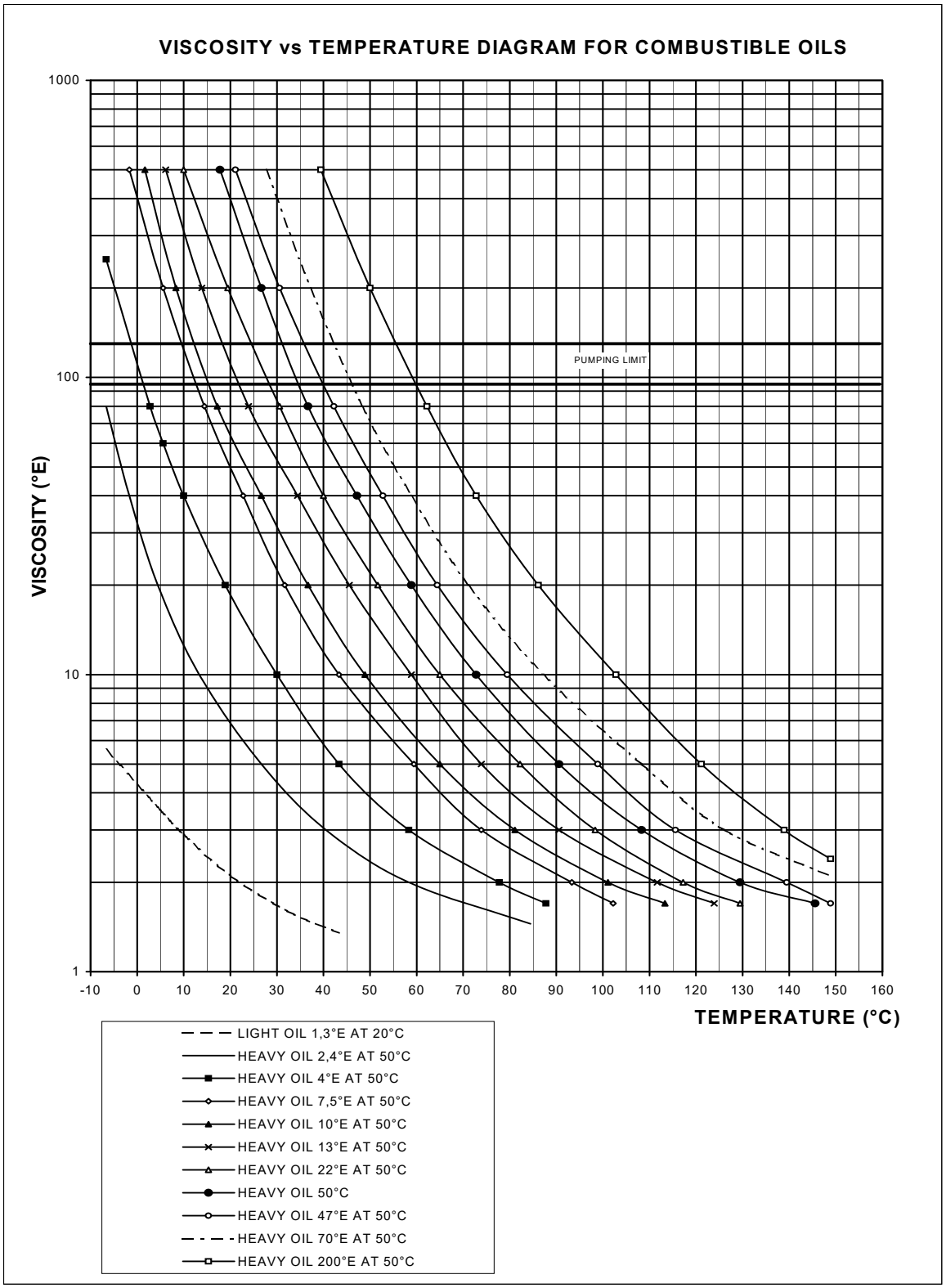
VISCOSITY vs TEMPERATURE DIAGRAM FOR COMBUSTIBLE OILS
1000
100
10
1
VISCOSITY (°E)
PUMPING LIMIT
-10
0
10
20
30
40
50
60
70
80
90
100
110
120
130
140
150
160
TEMPERATURE (°C)
LIGHT OIL 1,3°E AT 20°C
HEAVY OIL 2,4°E AT 50°C
HEAVY OIL 4°E AT 50°C
HEAVY OIL 7,5°E AT 50°C
HEAVY OIL 10°E AT 50°C
HEAVY OIL 13°E AT 50°C
HEAVY OIL 22°E AT 50°C
HEAVY OIL 50°C
HEAVY OIL 47°E AT 50°C
HEAVY OIL 70°E AT 50°C
HEAVY OIL 200°E AT 50°C

Fig. 10

Fig. 11 - **Hydraulic diagram 3ID0024**

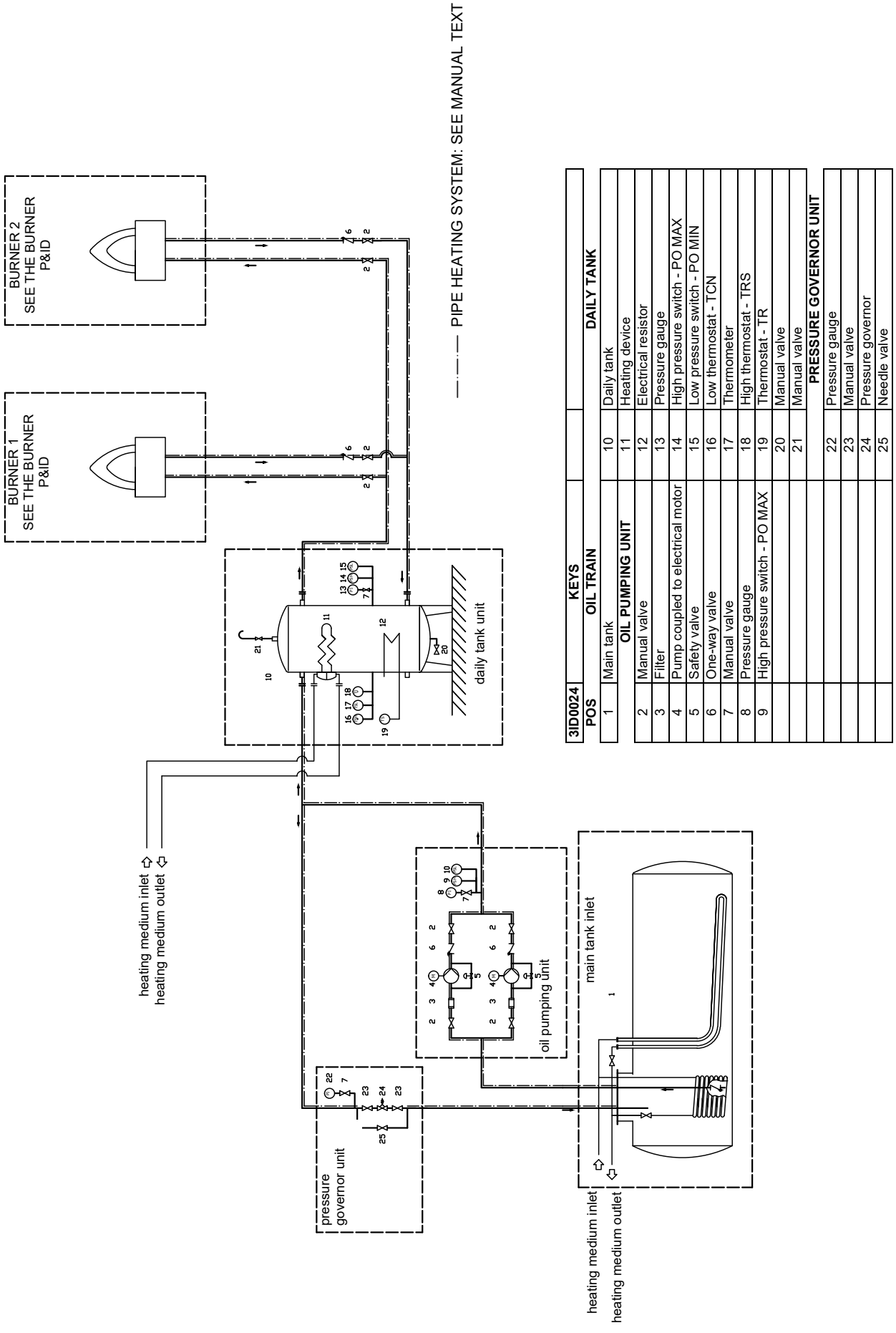

3ID0024	KEYS	
POS	OIL TRAIN	DAILY TANK
1	Main tank	10 Daily tank
	OIL PUMPING UNIT	11 Heating device
2	Manual valve	12 Electrical resistor
3	Filter	13 Pressure gauge
4	Pump coupled to electrical motor	14 High pressure switch - PO MAX
5	Safety valve	15 Low pressure switch - PO MIN
6	One-way valve	16 Low thermostat - TCN
7	Manual valve	17 Thermometer
8	Pressure gauge	18 High thermostat - TRS
9	High pressure switch - PO MAX	19 Thermostat - TR
		20 Manual valve
		21 Manual valve
		PRESSURE GOVERNOR UNIT
		22 Pressure gauge
		23 Manual valve
		24 Pressure governor
		25 Needle valve

PART III: OPERATION

LIMITATIONS OF USE

THE BURNER IS AN APPLIANCE DESIGNED AND CONSTRUCTED TO OPERATE ONLY AFTER BEING CORRECTLY CONNECTED TO A HEAT GENERATOR (E.G. BOILER, HOT AIR GENERATOR, FURNACE, ETC.), ANY OTHER USE IS TO BE CONSIDERED IMPROPER AND THEREFORE DANGEROUS.

THE USER MUST GUARANTEE THE CORRECT FITTING OF THE APPLIANCE, ENTRUSTING THE INSTALLATION OF IT TO QUALIFIED PERSONNEL AND HAVING THE FIRST COMMISSIONING OF IT CARRIED OUT BY A SERVICE CENTRE AUTHORISED BY THE COMPANY MANUFACTURING THE BURNER.

A FUNDAMENTAL FACTOR IN THIS RESPECT IS THE ELECTRICAL CONNECTION TO THE GENERATOR'S CONTROL AND SAFETY UNITS (CONTROL THERMOSTAT, SAFETY, ETC.) WHICH GUARANTEES CORRECT AND SAFE FUNCTIONING OF THE BURNER.

THEREFORE, ANY OPERATION OF THE APPLIANCE MUST BE PREVENTED WHICH DEPARTS FROM THE INSTALLATION OPERATIONS OR WHICH HAPPENS AFTER TOTAL OR PARTIAL TAMPERING WITH THESE (E.G. DISCONNECTION, EVEN PARTIAL, OF THE ELECTRICAL LEADS, OPENING THE GENERATOR DOOR, DISMANTLING OF PART OF THE BURNER).

NEVER OPEN OR DISMANTLE ANY COMPONENT OF THE MACHINE EXCEPT FOR ITS MAINTENANCE.

TO SECURE THE MACHINE, ACT ON THE ISOLATOR SWITCH. IN CASE OF ANOMALIES THAT REQUIRED A SHUT DOWN OF THE BURNER, IT'S POSSIBLE TO ACT ON THE AUXILIARY LINE SWITCH, LOCATED ON THE BURNER FRONT PANEL.

IN CASE OF A BURNER SHUT-DOWN, RESET THE CONTROL BOX BY MEANS OF THE RESET PUSHBUTTON. IF A SECOND SHUT-DOWN TAKES PLACE, CALL THE TECHNICAL SERVICE, WITHOUT TRYING TO RESET FURTHER.

WARNING: DURING NORMAL OPERATION THE PARTS OF THE BURNER NEAREST TO THE GENERATOR (COUPLING FLANGE) CAN BECOME VERY HOT, AVOID TOUCHING THEM SO AS NOT TO GET BURNT.

ADJUSTMENTS FOR OIL OPERATION

Before starting up the burner, make sure that the return pipe to the tank is not obstructed. Any obstruction would cause the pump seal to break.

ATTENTION: **before starting the burner up, be sure that the manual cutoff valves are open. Be sure that the mains switch is closed.**

(First) Start-up preliminary operations - oil supply

Recommended actions to be carried out in sequence:

1 Check the burner and all its components are installed correctly
2 Check that all electrical and mechanical parts are connected correctly
3 Check that there is water or other fluids in the generator
4 Check that the ventilation gates/dampers in the plant are open and the stack is free
5 Connect the gauges used to adjust and check pressures on the incoming line and on the head, air and fuel side.
6 Open the thermostatic series and the safety chain
7 Turn the main switch on the panel front with the "MAN/AUTO" selector to position "0".
8 Select the fuel using the fuel selector on the front of the panel (if any)
9 Check the phase and neutral position is correct
10 Check the sense of rotation of the electrical motors
11 Ensure the pressure on the oil ring is not excessive for the oil pump and items of the burner.
12 Ensure the oil minimum supply pressure and temperature equal at least the values provided for in the specifications of the installed pump
13 Run the oil pump using the CP meter (see pictures) to load the circuit, if there is no fuel supply ring. For any advice, see the pump chapter.
14 Bleed the line, getting rid of all the air in the pipe. Adjust the pump plug during priming and on the pre-heating tank (if any), so that the resistors are not damaged. For any advice, see the pump chapter.

DANGER! Venting the air from the oil line can also be accompanied by oil leakage, with the consequent risks for the operator and the surrounding devices. Use appropriate caution.

The figure below shows nozzle flow valve. Before turn on the burner, open the manual valve.

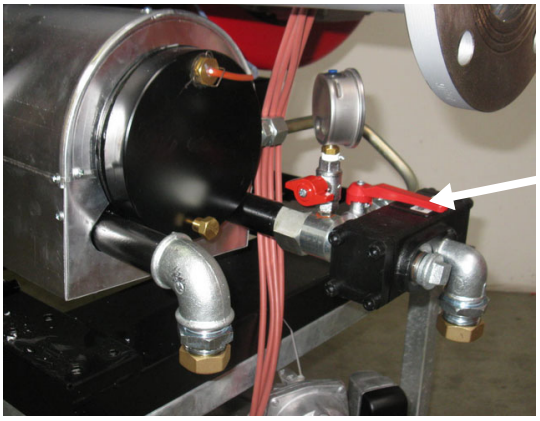

Tank air vent

Before to give tension to the eletrical resistance, release the air inside the heaters throught the SA connection acting on the T cap.

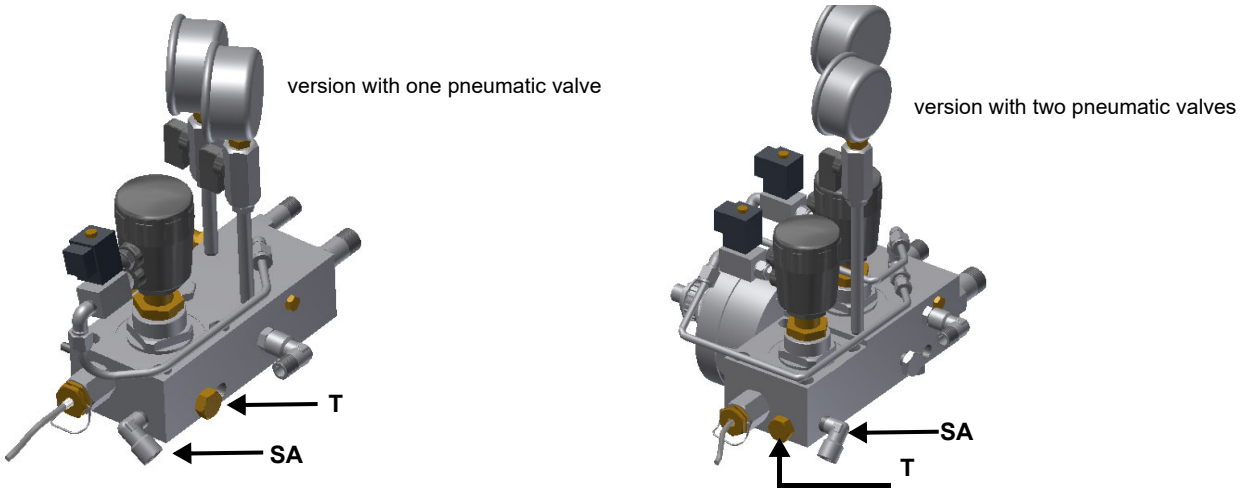

Oil thermostat adjustment

Progressive and fully modulanting oil burners are equipped with electronic multi-thermostat Danfoss MCX, whose operation is controlled by thyristor. (for details refer to the attached technical documentation)

Fig. 12 - Danfoss MCX

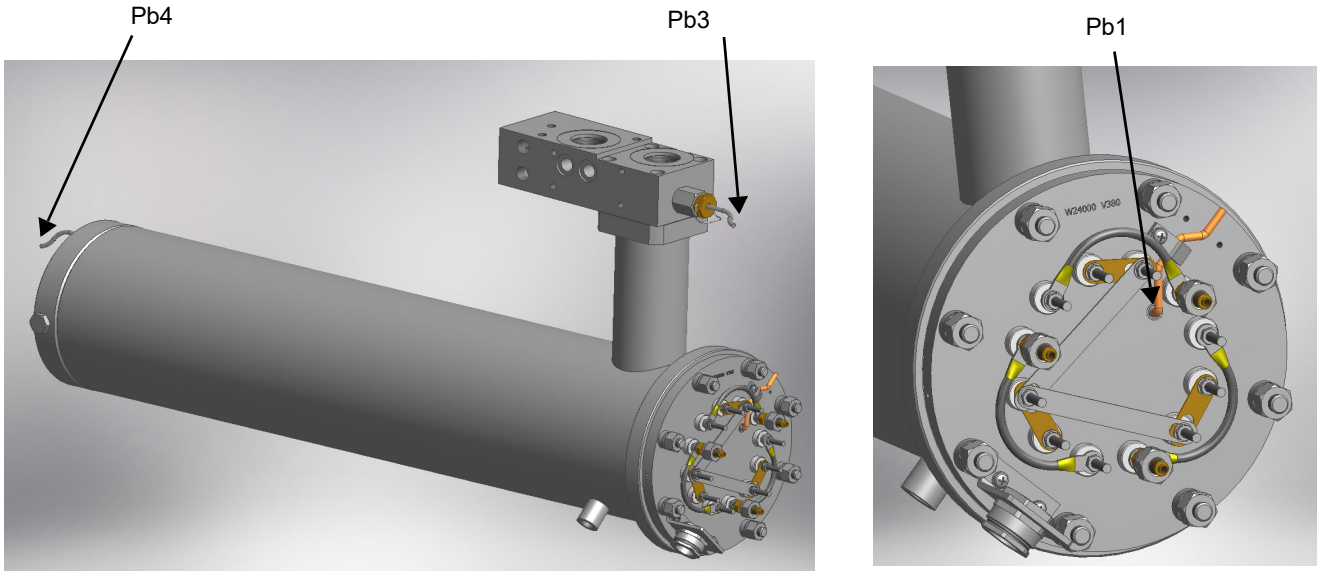

Fig. 13 - Probe connections (Danfoss MCX)

Menu path				Oil viscosity at 50 °C according to the letter shown in the burner model				
				P	N	E	D	H
				89 cSt	< 50 cSt	> 50 cSt < 110 cSt	> 110 cSt < 400 cSt	> 400 cSt < 4000 cSt
				12 °E	< 7°E	> 7 °E < 15 °E	> 15 °E < 50 °E	> 50 °E < 530 °E
Par								
rEG	Pb1	tr	Oil heater temperature probe	parameter not visible				
	Pb2	tCI	Plant consent temperature probe (when installed)	20 °C	70 °C	70 °C	70 °C	---
	Pb3	Oil	Oil heater output temperature probe (PID regulation);	60-70 °C	110-120 °C	120-130 °C	130-140 °C	140-150 °C
		SP0	Set-point oil heater with oil pump stopped (stand-by)	45 °C	120 °C	130 °C	140 °C	150 °C
	Pb4	tcn	Oil heater consent temperature probe	40 °C	100 °C	100 °C	110 °C	120 °C
		trS	Safety temperature tank resistors (manual reset)	120 °C	190-200 °C	190-200 °C	190-200 °C	190-200 °C

The oil viscosity at the nozzle, should be about 1,5 °E, which guarantees correct and safe functioning of the burner. The above temperature values are suggested and refer to a plant designed according to the prescriptions in the burner user manual.The suggested values can change in reference to the fuel oil specifications.

The oil flow rate can be adjusted choosing a nozzle that suits the boiler/utilisation output and setting the delivery and return pressure values according to the ones quoted on the following charts.

KPBY91-92-92 : Fluidics 15AG

KRBY510-515-520-525 : Fluidics 24Y

VISCOSITY AT 50 °C		OIL PRESSURE AFTER BURNER PUMP		OIL PRESSURE AFTER OIL METERING VALVE	
		min	max	min	max
°cSt (°E)		bar		°C	
	< 50 (7)	7	9	1	6
> 50 (7)	< 110 (15)	7	9	1	6
> 110 (15)	< 400 (50)	7	9	1	6
> 400 (50)	<4000 (530)	7	9	1	6

The pressure values shown in the table are intended as working range. In order to obtain a more accurate indication, please refer to the nozzle pressure-flow diagrams.

Compressed air adjustment

ATTENTION: set the pressure value about 1 bar, at the pressure gauge 47 (see Fig. 15). check it before open valve 16!

To start the burner set the oil and atomisation medium pressure at about 1 bar, as first trial. then, regulate the burner checking the combustion values at the chimney, according to the paragraph "operation", and adjust the starting point according to the regulation.

Fig. 14

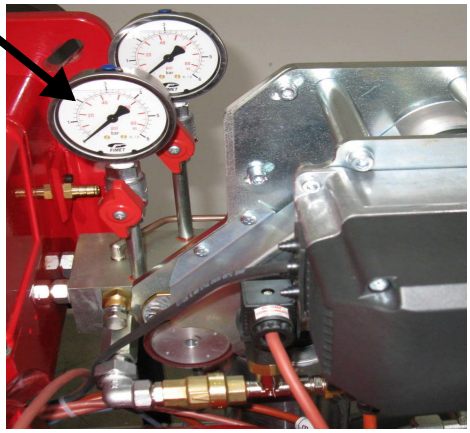

Fig. 15

ATTENTION: set the pressure value about 5-10 bar, at the pressure gauge on the governor 41 (see hydraulic diagram and Fig. 14)

Air valve for gun cleaning

As the flame is off, the purge valve opens automatically the compressed air to clean the gun. With this operation, the oil between the valves and the nozzle is drained. The air pressure for the gun cleaning must be about 1 bar, and should be setted throught the item in the below image.

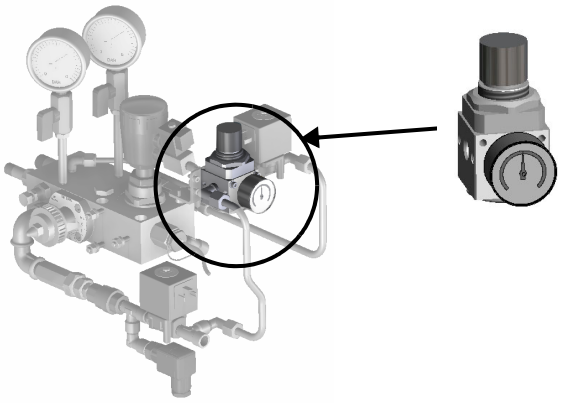

ADJUSTMENTS FOR GAS OPERATION

Air flow and gas adjustment

- startup the burner by selecting GAS by means of the switch on the burner control panel
- Adjust the air and gas flow rates, in according to the “air/gas ratio” curvepoints setting procedure on the LMV manual,. Check continuosly, the flue gas analisys, to avoid combustion with air excess.
- Once the butterfly valve is completely opened, acting on the pressure stabiliser of the valves group, adjust the **gas flow rate in the high flame stage** as to meet the values requested by the boiler/utilisation:
- If necessary, change the combusiton head positionl.
- The air and gas flow rate are now adjusted at the maximum power stage: go on with the point to point adjustement, as to reach the minimum output
- Adjust the pressure switches

(First) Start-up preliminary operations - gas supply

Recommended actions to be carried out in sequence:

1 Check the burner and all its components are installed correctly
2 Check that all electrical and mechanical parts are connected correctly
3 Check that there is water or other vector fluids in the generator
4 Check that the ventilation gates/dampers in the plant are open and the stack is free
5 Connect the gauges used to adjust and check pressures on the incoming line and on the head, air and fuel side.
6 Open the thermostatic series and the safety chain
7 Turn the main switch on the panel front with the "ON/OFF" selector to position "ON".
8 Check the phase and neutral position is correct
9 Open the manual shut-off valves slowly, in order to prevent any water hammers that might seriously damage valves and pressure regulator
10 Check the sense of rotation of the electrical motors
11 Bleed the line, getting rid of all the air in the pipe as far as the main gas valve
12 Ensure the pressure entering the main valves is not excessive due to damage to or wrong adjustment of the line pressure regulator
13 Ensure the gas supply minimum pressure is at least equal to the pressure required by the pressure curves - burnt gas flow

DANGER! Venting the air from the piping must take place in safe conditions, avoiding dangerous concentrations of fuel in the rooms. You must therefore ventilate the rooms and wait long enough for the gases to dissipate outside before switching on.

To ensure the proper operation of the flow sensors, the fuel/air pipes must be free of liquid residues such as oil or water. Also, make sure that the silencer is installed on the air intake.

ADJUSTING THE GAS VALVES GROUP

Multibloc MB-DLE

The multibloc unit is a compact unit consisting of two valves, gas pressure switch, pressure stabilizer and gas filter.

The valve is adjusted by means of the **RP** regulator after slackening the locking screw **VB** by a number of turns. By unscrewing the regulator **RP** the valve opens, screwing the valve closes. To set the fast opening remove cover **T**, reverse it upside down and use it as a tool to rotate screw **VR**. Clockwise rotation reduces start flow rate, anticlockwise rotation increases it.

Do not use a screwdriver on the screw **VR**!

The pressure stabilizer is adjusted by operating the screw **VS** located under the cover **C**. By screwing down the pressure is increased and by unscrewing it is reduced.

Note: the screw **VSB** must be removed only in case of replacemente of the coil.

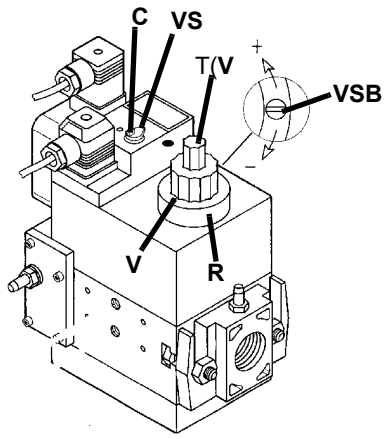

MultiBloc MBE *Regulation VD-R whith PS*

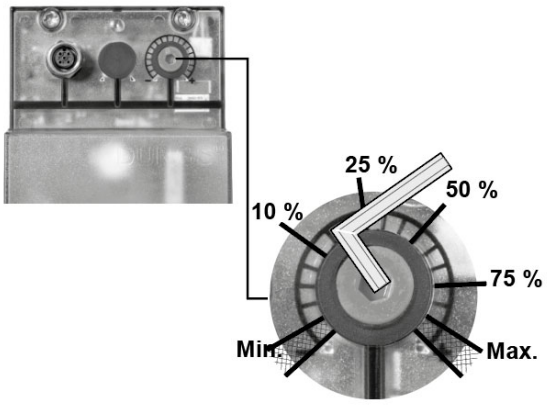

Outlet pressure	MIN	10%	25%	50%	75%	MAX
PS-10/40	4 mbar 0,4 kPa 2 "w.c.	10 mbar 1,0 kPa 4 "w.c.	25 mbar 2,5 kPa 10 "w.c.	50 mbar 5,0 kPa 20 "w.c.	75 mbar 7,5 kPa 30 "w.c.	100 mbar 10,0 kPa 40 "w.c.
PS-50/200	20 mbar 2,0 kPa 8 "w.c.	50 mbar 5,0 kPa 20 "w.c.	125 mbar 12,5 kPa 50 "w.c.	250 mbar 25,0 kPa 100 "w.c.	375 mbar 37,5 kPa 150 "w.c.	500 mbar 50,0 kPa 200 "w.c.

Caution: check that the range of the installed spring is compatible with the gas pressure at the burner head (see appropriate diagram) to which must be added the back pressure and approx. 5 /10 mbar for various leaks and gas line.

While making outlet pressure adjustments, do not exceed a value that creates a hazardous condition to the burner!

Siemens VGD../VRD.. version with SKP2

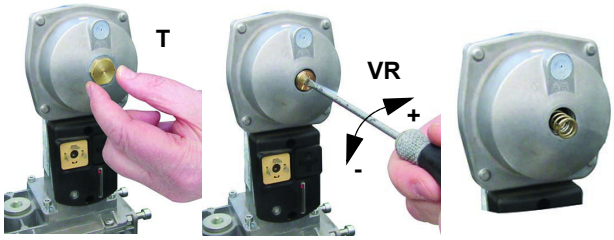

Performance range (mbar)			
	neutral	**yellow**	**red**
Spring colour SKP 25.0	0 ÷ 22	15 ÷ 120	100 ÷ 250
Spring colour SKP 25.4		7 ÷ 700	150 ÷ 1500

The pressure adjusting range, upstream the gas valves group, changes according to the spring provided with the valve group.
To replace the spring supplied with the valve group, proceed as follows:i

To increase or decrease gas pressure, and therefore gas flow rate, remove the cap **T** and use a screwdriver to adjust the regulating screw **VR**. Turn clockwise to increase the flow rate, counterclockwise to reduce it.

Setting air and gas pressure switches

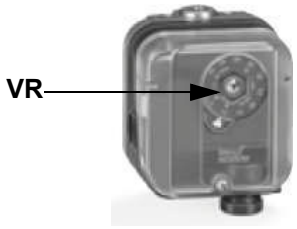

The **air pressure switch** locks the control box if the air pressure is not the one requested. If it happens, unlock the burner by means of the control box unlock pushbutton, placed on the burner control panel.

The **gas pressure switches** check the pressure to avoid the burner operate when the pressure value is not in the requested pressure range.

Calibration of low gas pressure switch

As for the gas pressure switch calibration, proceed as follows:

- Be sure that the filter is clean.
- Remove the transparent plastic cap.
- While the burner is operating at the maximum output, test the gas pressure on the pressure port of the minimum gas pressure switch.
- Slowly close the manual cutoff valve (placed upstream the pressure switch, see gas train installation diagram), until the detected pressure is reduced by 50%. Pay attention that the CO value in the flue gas does not increase: if the CO values are higher than the limits laid down by law, slowly open the cutoff valve as to get values lower than these limits.
- Check that the burner is operating correctly.
- Clockwise turn the pressure switch adjusting ring nut (as to increase the pressure value) until the burner stops.
- Slowly fully open the manual cutoff valve.
- Refit the transparent plastic cover on the pressure switch.

Adjusting the maximum gas pressure switch (when provided)

To calibrate the maximum pressure switch, proceed as follows according to its mounting position:

1 remove the pressure switch plastic cover;

2 if the maximum pressure switch is mounted upstreaam the gas valves: measure the gas pressure in the network, when flame is off; by means of the adjusting ring nut **VR**, set the value read, increased by the 30%.

3 if the maximum pressure switch is mounted downstream the “gas governor-gas valves” group and upstream the butterfly valve: light the burner, adjust it according to the procedure in the previous paragrph. Then, measure the gas pressure at the operating flow rate, downstream the “gas governor-gas valves” group and upstream the butterfly valve; by means of the adjusting ring nut **VR**, set the value read on step 2, increased by the 30%;

4 replace the plastic cover.

Calibration of air pressure switch

To calibrate the air pressure switch, proceed as follows:

- Remove the transparent plastic cap.
- Once air and fuel setting have been accomplished, startup the burner.
- During the pre-purge phase o the operation, turn slowly the adjusting ring nut **VR** in the clockwise direction (to increase the adjusting pressure) until the burner lockout, then read the value on the pressure switch scale and set it to a value reduced by 15%.
- Repeat the ignition cycle of the burner and check it runs properly.
- Refit the transparent plastic cover on the pressure switch.

PGCP Gas leakage pressure switch (witn Siemens LDU/LME7x burner control/Siemens LMV Burner Management System)

- remove the pressure switch plastic cover;
- adjust the PGCP pressure switch to the same value set for the minimum gas pressure switch;
- replace the plastic cover.

Setting the combustion head position

CAUTION: perform these adjustments once the burner is turned off and cooled.

Only if necessary, change the combusiton head position: to let the burner operate at a lower output, loose the **VB** screw and move progressively back the combustion head towards the MIN position, by turning clockwise the **VRT** ring nut. Fasten **VB** screw when the adjustment is accomplished.

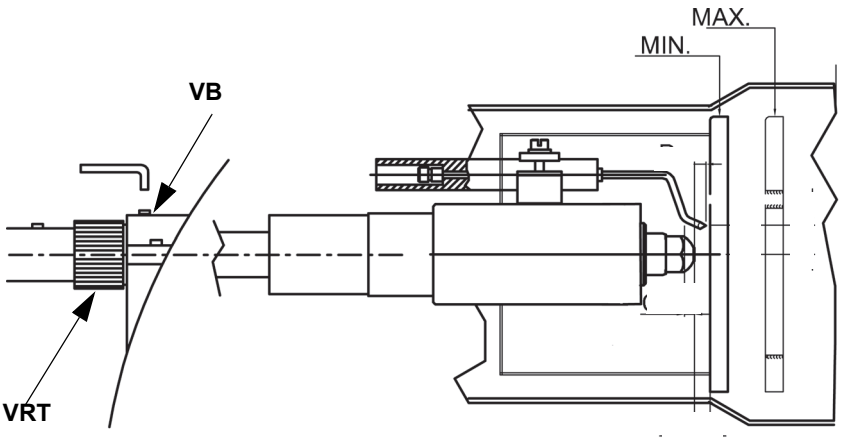

Attention! if it is necessary to change the head position, repeat the air and fuel adjustments described above.

Integrated proving system (burners equipped with LME7x, LMV, LDU)

This paragraph describes the integrated proving system operation sequence:

- At the beginning both the valves (EV1 and EV2) must be closed.
- Test space evacuating: EV1 valve (burner side) opens and keep this position for a preset time (td4), in order the bring the test space to ambient pressure.Test atmospheric pressure: EV1 closes and keep this position for a preset time (test time td1). The pressure switch PGCP has not to detect a rise of pressure.
- Test space filling: EV2 opens and keep this position for a preset time (td3), in order to fill the test space.
- Test gas pressure: EV2 closes and keep this position for a preset time (td2). The pressure switch PGCP has not to detect a pressure drop down.

If all of the test phases are passed the proving system test is successful, if not a burner lockout happens.

On LMV5x and LMV2x/3x and LME73 (except LME73.831BC), the valve proving can be parameterized to take place on startup, shutdown, or both.

On LME73.831BC the valve proving is parameterized to take place on startup only.

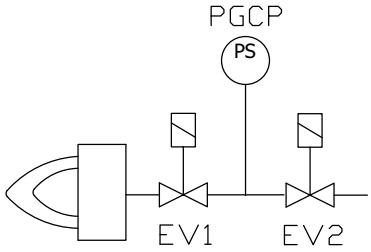

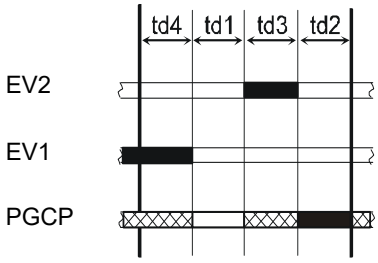

AIR FLOW AND FUEL ADJUSTMENT

Adjustments - brief description

The air and fuel rates adjustments must be performed at the maximum ouptput first (“high flame”): see the LMV related manual.

- Check that the combustion parameters are in the suggested limits.
- Check the flow rate measuring it on the counter or, if it was not possible, verifying the combustion head pressure by means of a differential pressure gauge, as described on par. “Measuring the gas pressure in the combustion head”.
- Then, adjust the combustion values by setting the “gas/air” ratio” curvepoints (see the LMV related manual).
- Set, now, the low flame output (according to the procedure described on the “Siemens LMV manual”) in order to avoid the low flame output increasing too much or that the flues temperature gets too low to cause condensation in the chimney.

The heavy oil flow rate can be adjusted choosing a nozzle that suits the boiler/utilisation output and setting properly the delivery pressure values.

WARNING! During commissioning operations, do not let the burner operate with insufficient air flow (danger of formation of carbon monoxide); if this should happen, make the fuel decrease slowly until the normal combustion values are achieved.

WARNING! the combustion air excess must be adjusted according to the values in the following chart.

Recommended combustion parameters		
Fuel	Recommended (%) CO_2	Recommended (%) O_2
Natural gas	9 ÷ 10	3 ÷ 4.8
Heavy oil	11 ÷ 12.5	4.7 ÷ 6.7

User interface

The AZL2x.. display is shown below:

The keys functions are the following:

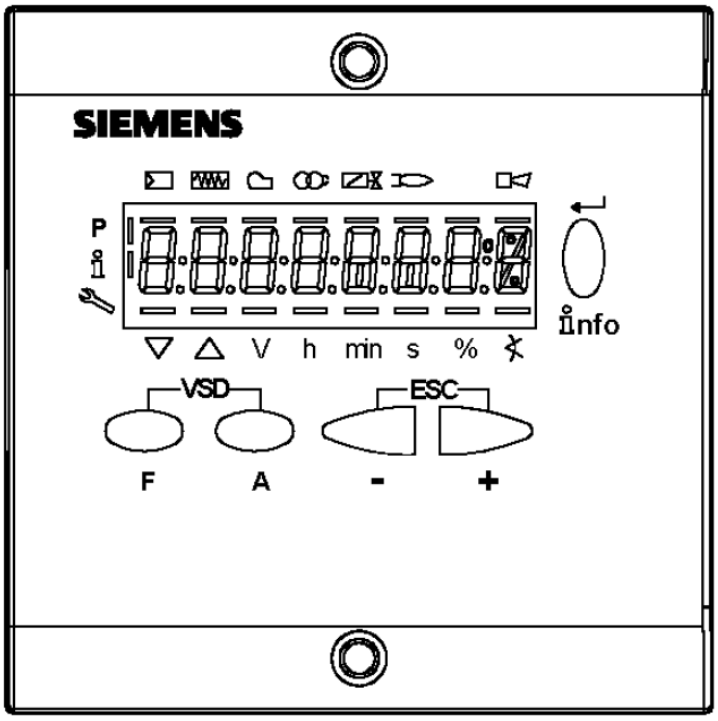

Key F

Used to adjust the “fuel” actuator position (**F**uel): :

While pressing the **F** key, the “fuel” actuator position can be changed by means of the **+** and **-** keys.

Key A

Used to adjust the “air” actuator position (**A**ir):

While pressing the **A** key, the “air” actuator position can be changed by means of the **+** and **-** keys.

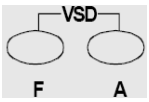

Key F + A

While pressing the two keys contemporarly, the **code** message will appear: by entering the proper password it is possible to access the **Service** mode.

Info and Enter keys

Used for **Info** and **Service** menues

Used as **Enter** key in the setting modes

Used as **Reset** key in the burner operation mode

Used to enter a lower level menu

-Key -

Used to decrease a a value

Used to enter Info and Serivce during the curve adjustments

+Key +

Used to increase a a value

Used to enter Info and Serivce during the curve adjustments

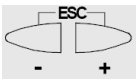

Keys (+ & -)= ESC

By pressing + and - at the same time, the ESCAPE function is perfomed:

to enter a lower level menu

The display will show these data:

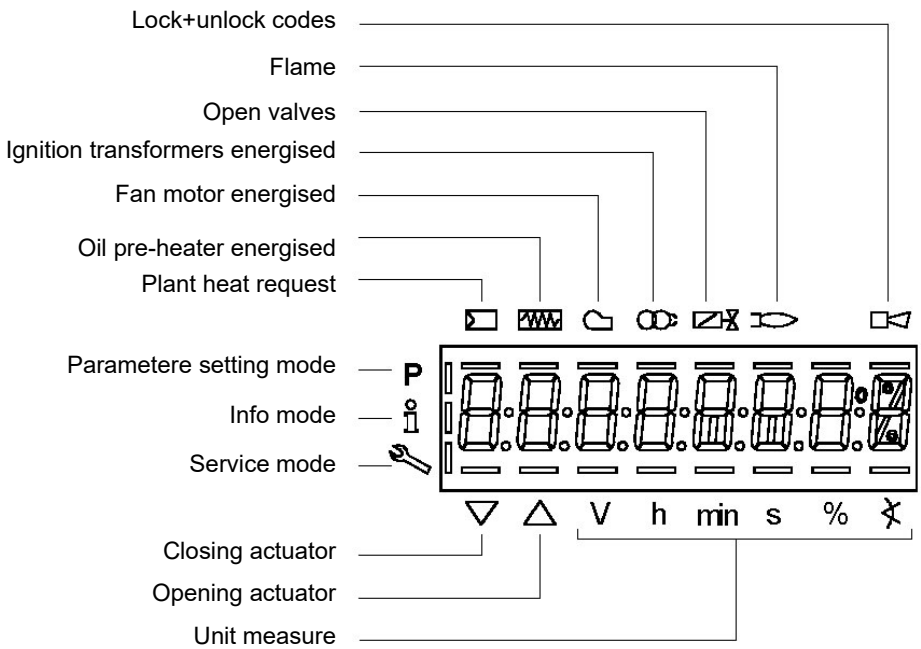

The display will show these data:

Setting menu

The setting menu is divided into different blocks:

Bloc.	Descrizione	Description	Password
100	Informazioni generali	General	OEM / Service / Info
200	Controllo bruciatore	Burner control	OEM / Service
400	Curve rapporto	Ratio curves	OEM / Service
500	Controllo rapporto	Ratio control	OEM / Service
600	Servocomandi	Actuators	OEM / Service
700	Storico errori	Error history	OEM / Service / Info
900	Dati di processo	Process data	OEM / Service / Info

The accesses to the various blocks are allowed by passwords. Passwords are divided into three levels:

- User level (info): no password needed
- Service level (Service)
- Manifacturer level (OEM)

PHASES LIST

During operation, the following program phases are shown. The meaning for each phase is quoted in the table below

Fase /	Funzione	Function
Ph00	Fase blocco	Lockout phase
Ph01	Fase di sicurezza	Safety phase
Ph10	t10 = tempo raggiungimento posizione riposo	t10 = home run
Ph12	Pausa	Standby (stationary)
Ph22	t22 = tempo di salita ventilatore (motore ventilatore = ON, valvola intercetta-zione di sicurezza = ON)	t22 = fan ramp up time (fan motor = ON, safety shutoff valve = ON)
Ph24	Verso posizione preventilazione	Traveling to the prepurge position
Ph30	t1 = tempo preventilazione	t1 = prepurge time
Ph36	Verso posizione accensione	Traveling to the ignition position
Ph38	t3 = tempo preaccensione	t3 = preignition time
Ph40	TSA1 = primo tempo sicurezza (trasformatore accensione ON)TSA1 = primo tempo sicurezza (trasformatore accensione ON)	TSA1= 1st safety time (ignition transformer ON)

Ph42	TSA1 = primo tempo sicurezza (trasformatore accensione OFF)	TSA1 = 1st safety time (ignition transformer OFF) t42 = preignition time OFF
Ph44	t44 = intervallo 1	t44 = interval 1
Ph50	TSA2 = secondo tempo sicurezza	TSA2 = 2nd safety time
Ph52	t52 = intervallo 2	t52 = interval 2
Ph60	Funzionamento 1 (stazionario)	Operation 1 (stationary)
Ph62	t62 = massimo tempo bassa fiamma (funzionamento 2, in preparazione per spegnimento, verso bassa fiamma)	t62 = max. time low-fire (operation 2, preparing for shutdown, traveling to low-fire)
Ph70	t13 = tempo postcombustione	t13 = afterburn time
Ph72	Verso posizione postcombustione	Traveling to the postpurge position
Ph74	t8 = tempo postventilazione	t8 = postpurge time
Ph80	t80 = tempo evacuazione controllo tenuta valvole	t80 = valve proving test evacuation time
Ph81	t81 = tempo perdita pressione atmosferica, prova atmosferica	t81 = leakage time test time atmospheric pressure, atmospheric test
Ph82	t82 = test perdita, test riempimento	t82 = leakage test filling test, filling
Ph83	t83 = tempo perdita pressione gas, test pressione	t83 = leakage test time gas pressure, pressure test
Ph90	Tempo attesa “mancanza gas”	Gas shortage waiting time

Entering the Parameter levels

By means of a proper use of the keys, it is possible to enter the various level parameters, as shown in the following flow chart:

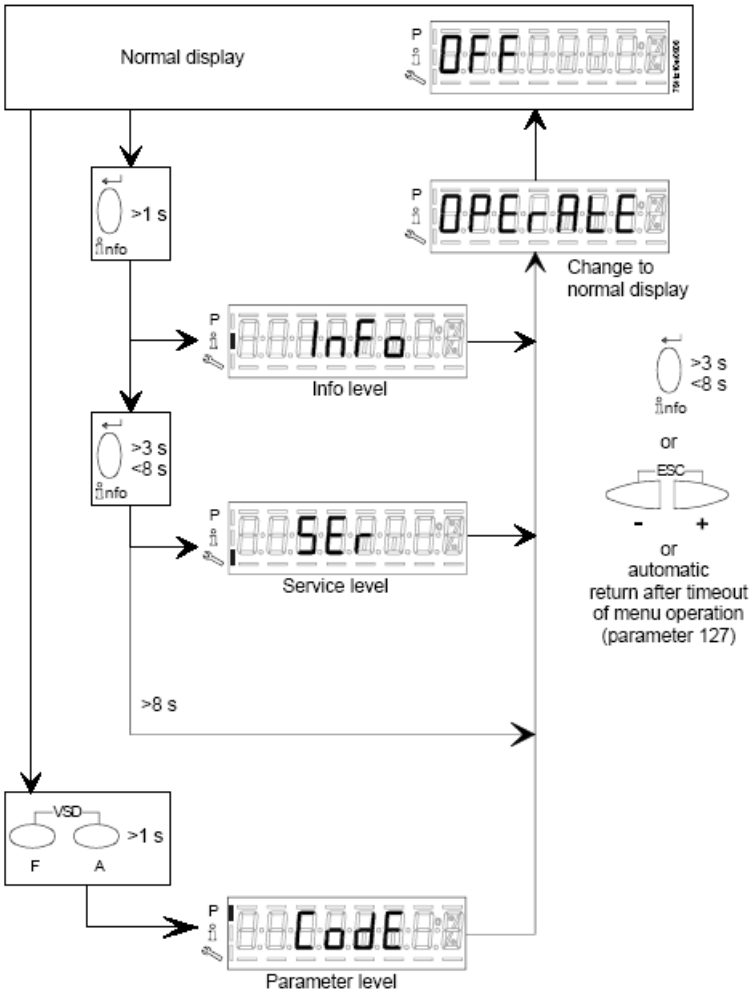

The burner and consequently the LMV2x.. are factory set; the air and fuel curves as set as well.

Info level

To enter the **Info** level, proceed as follows:

1 in any menu position, press keys **+** and **-** at the same time, then the program will start again: the display will show **OFF**.

2 until the display will show **InFo**, Press the **enter (InFo)** key

3 then il will show the first code (167) flashing, on the right side it will show the data entered. By pressing **+** or **-** it is possible to scroll (up or down) the parameter list.

4 If a dot-line is shown on the right, there is no enough room for complete visualisation: press **enter** again the data will be completely shown for 1 to 3 seconds. By pressing **enter** or **+** and**-** at the same time, the system will exit the parameter visualisation and go back to the flashing number.

The **Info** level shows some basic parameters as:

Parameter	***Description***
167	Cubic meters of fule (resettable)
162	Operating hours (resettable)
163	Device operating hours
164	Burners start-ups (resettable)
166	Total number of start-ups
113	Burner number (i.e. serial number)
107	Software version
102	Software date
103	Device serial number
104	Customer code
105	Version
143	Free

5 Example: choose parameter 102 to show the date

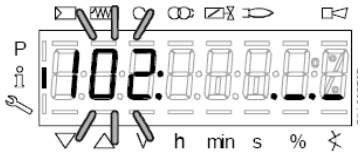

the display shows parameter **102** flashing on the left and characters **._._** on the right.

6 press InFo for 1-3 seconds: the date will appear

7 press InFo to go back to parameter “102”

8 by pressing + / -, it is possible to scroll up/down the parameter list (see table above), or, by pressing ESC or InFo for more seconds, the display will show

9 Once the last parameter is accessed (143) by pressing **+** , the **End** message will flash.

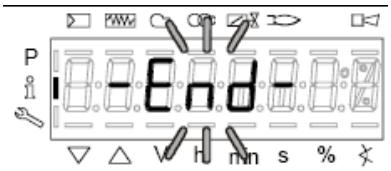

10 Press **InFo**

for more than three seconds or for more than three seconds orto return to the normal display.

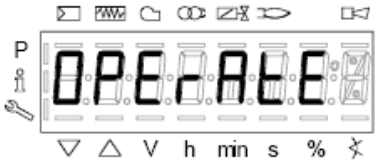

If a message like the one below is shown during operation,

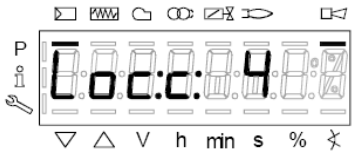

it means that the burner is locked out and the Errore code is shown (in the example “error code:4”); this message is alternating with another message

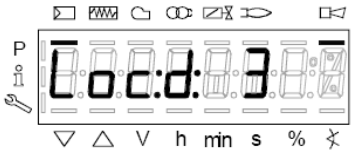

Diagnostic code (in the example “diagnostic code:3”). Record the codes and find out the fault in the Error table.
To perform the reset, press InFo for one second:

The unit displays an event which does not lead to shutdown.
The display shows current error code **c:** alternating with diagnostic code **d**:

.
Press **InFo** to return to the display of phases.
Example: Error code **111** / diagnostic code 0

To reset, press InFo for a second. Record the codes and check the Error List to find the type of faults.

Service level
To enter the Service mode, press InFo until the display will show:

The service level shows all the information about flame intensity, actuators position, number and lock codes:

Parameter	*Description*
954	Flame intensity
121	% output, if set = automatic operation
922	Actuators position, 00=combustibile; 01= aria
161	Lock-outs number
701..725	Lock-outs History (see chapter 23 in the LMV2x manual)

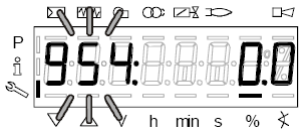

1 .the first parameter will be “954”: the percentage of flame is shown on the right. By pressinf + or - it is possible to scroll up/down the parameter list.

2 Once the last parameter is accessed (143) by pressing **+** , the **End** message will blink.

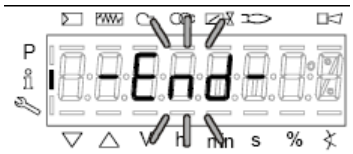

3 PressPress **InFo**

for more than three seconds or for more than three seconds orto return to the normal display.

For further nformation, see tha LMV2 related manual.

Fully-modulating burners

.To adjust the fully-modulating burners, use the **CMF** switch on the burner control panel (see next picture), instead of the **TAB** thermostat as described on the previous paragraphs about the progressive burners. Go on adjusting the burner as described before, paying attention to use the CMF switch intead of **TAB**.

The **CMF** position sets the oprating stages: to drive the burner to the high-flame stage, set CMF=1; to drive it to the low-flame stage, set CMF=2.

CMF

CMF = 0 stop at the current position
CMF = 1 high flame operation
CMF = 2 low flame operation
CMF = 3 automatic operation

OPERATION

ATTENTION: BEFORE STARTING THE BURNER UP, BE SURE THAT THE MANUAL CUTOFF VALVES ARE OPEN AND CHECK THAT THE PRESSURE VALUE UPSTREAM THE GAS TRAIN MATCHES THE VALUE ON PARAGRAPH "TECHNICAL SPECIFICATIONS"). CHECK THAT THE MAINS SWITCH IS CLOSED. CAREF

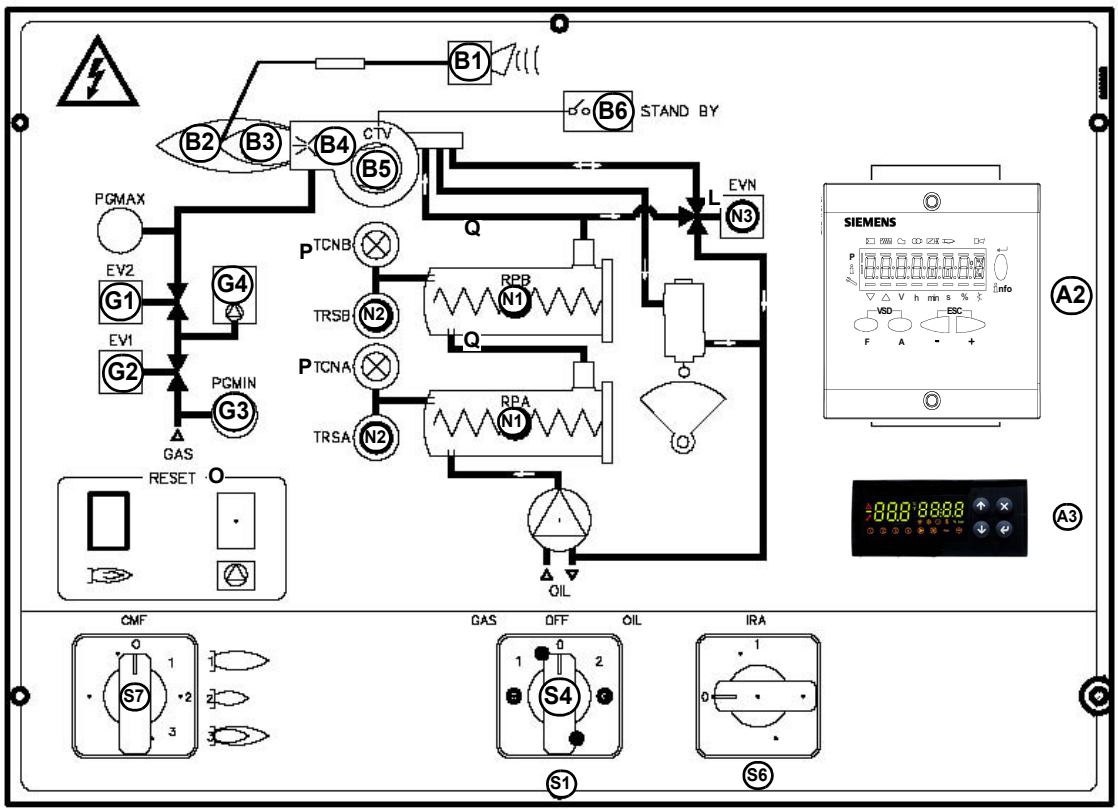

Fig. 16 - Burner front panel

Keys

B1 Lock-out LED
B2 Hi-flame operation LED
B3 Lo-flame operation LED
B4 "Ignition transformer operation" LED
B5 "Fan motor overload tripped" LED
B6 Stand-by signalling LED
G1 "EV2 opening" LED
G2 "EV1 opening" LED
G3 "Gas pressure switch signal " LED
G4 Gas proving system lockout signalling LED
S1 Main switch
S4 Fuel selection
S6 Auxiliary resistors switch
S7 CMF switch - fully modulating burners only
O4 Oil pump in operation LED
N1 Pre-heating oil tank
N2 Pre-heating resistors safety thermostat
N3 Oil solenoid valve operation
A1 Burner Modulator (only on fully modulating burners)
A3 Regulation thermostat for pre-heating oil resistors

PART IV: MAINTENANCE

Fuel selection:

- In order to start the burner with gas or light oil, the operator must commute the selector on the burner control panel on (1) = gas, or (2) = oil.
  If the selector is set on (1) the gas cock must be open, while the oil cock must be closed. Viceversa if the selector is set on (2).
  CAUTION: if the fuel chosen is oil, be sure the cutoff valves on the feed and return pipes are open.

Operation

- Select the fuel by turning the switch **S1** on the burner control panel .
- Check that the control box is not in the lockout position; in case unlock it by pressing the relevant key (for further information on the LMV.., see the related manual).
- Check that the series of thermostats (or pressure switches) enable the burner to start up.

Gas Operation

- Check that the gas pressure in the circuit is high enough (LED **B1** on).
- The valve proving test begins.
- At the beginning of the start-up cycle the the air damper moves to the maximum opening, the fan motor starts and the pre-purge phase begins. During the pre-purge phase the complete opening of the air damper is signalled by the LED **B2** on the front panel.
- At the end of the pre-purge stage, the air damper moves to the ignition position, the ignition transformer is energised (signalled by LED **B4** on the panel) and, after few sec.onds the two gas valves EV1 and EV2 are energised (indicator lights **G1** and **G2** on). Few seconds after the opening of the gas valves, the ignition transformer is de-energised and LED **B4** is off.
- To move from the low flame position, the actuator opening time (<10 s) is controlled by the control box. When this time elapses, the burner operates according the plant needs.

Heavy oil Operation

- At the beginning of the start-up cycle the air damper moves to the maximum opening, the fan motor starts and the pre-purge phase begins. During the pre-purge phase the complete opening of the air damper is signalled by LED **B2** on the front panel.
- At the end of the pre-purge the air damper is brought to the ignition position and the ignition transformer is energised (signalled by LED **B4** on the panel). Few seconds later, the oil valve opens and the ignition transformer is de-energized (LED **B4** off).
- The burner is now operating and after some seconds the burner is automatically driven into high flame (LED **B2** on), or remains in low flame (LED **B3** on) according to the plant needs.

At least once a year carry out the maintenance operations listed below. In the case of seasonal servicing, it is recommended to carry out the maintenance at the end of each heating season; in the case of continuous operation the maintenance is carried out every 6 months.

WARNING: ALL OPERATIONS ON THE BURNER MUST BE CARRIED OUT WITH THE MAINS DISCONNECTED AND THE FUEL MANAUL CUTOFF VALVES CLOSED!

ATTENTION: READ CAREFULLY THE "WARNINGS" CHAPTER AT THE BEGINNIG OF THIS MANUAL.

ROUTINE MAINTENANCE

- Check that the gas meter is not moving when the burner is off. In case it is rotating, look for possible leaks.
- Check that all parts in contact with combustive air (air box, protection mesh and Archimedean screw) are clean and free from any obstruction that might impede free afflux. Clean it with compressed air if available and/or a dry brush or cloths. Eventually wash it with non corrosive detergents.
- Check of blast tube; it must be substituted in case of obvious cracks or anomalous holes. Slight deformations that do not affect combustion may be tolerated
- Clean and examine the gas filter and replace it if necessary.
- Clean and examine the oil filter cartridge and replace it if necessary.
- Examine the flexible hoses and check for possible leaks.
- Check and clean if necessary the oil heaters and the tank, according to the fuel type and its use; remove the heaters flange fixing nuts and remove the heaters from the tank: clean by using steam or solvents and not metallic things.
- Remove and clean the combustion head.
- Examine and clean the ignition electrode, adjust and replace if necessary.
- Examine and clean the detection probe, adjust and replace if necessary.
- Examine the detection current.
- Remove and clean the heavy oil nozzle ***(Important: use solvents for cleaning, not metallic tools)*** and at the end of the maintenance procedures, after replacing the burner, turn it on and check the shape of the flame; if in doubt replace the nozzle. Where the burner is used intensively it is recommended to replace the nozzle as a preventive measure, at the begin of the operating season.
- Clean and grease joints and rotating parts.

IMPORTANT:Remove the combustion head before checking the ignition electrode.

- Remove and clean the compressed air regulator
- Remove and clean the oil regulator (if provided)
- At least every 2 months, or more often if needed, clean the room where the burner is installed.
- Avoid leaving installations, papers, nylon bags, etc., inside the room. They could be sucked by the burner and cause malfunctioning.
- Check that the room's vents are free from obstructions.

ATTENTIONwhen servicing, if it was necessary to disassemble the gas train parts, remember to execute the gas proving test, once the gas train is reassembled, according to the procedure imposed by the law in force.

CAUTION: avoid the contact of steam, solvent and other liquids with the electric terminals of the resistor.
On flanged heaters, replace the seal gasket before refitting it.
Periodic inspections must be carried out to determine the frequency of cleaning.

Gas filter maintenance

WARNING: Before opening the filter, close the manual cutoff valve downstream the filter and bleed the gas; check that inside the filter there is no pressurised gas.

Per pulire o sostituire il filtro gas procedere nel modo seguente:

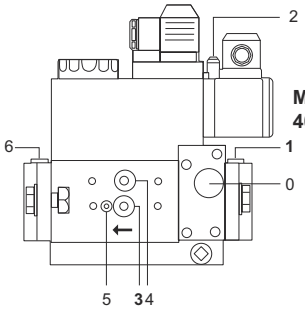

MB-DLE
405..412

0 Filter cover
1, 3,4 , 6 Screw plug G 1/8
2 Meter connection
5 Screw plug M14

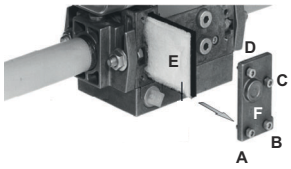

Pressure taps

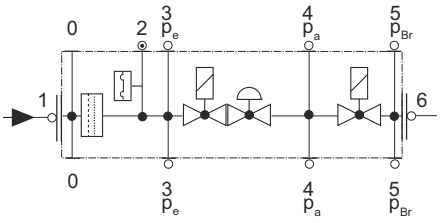

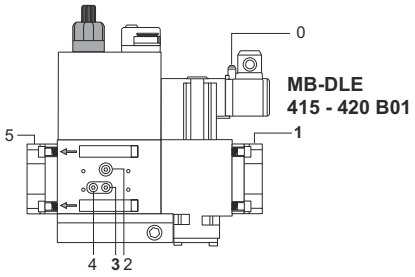

MB-DLE
415 - 420 B01

0, 1, 2, 3, 4, 5
Bouchon à vis G 1/8

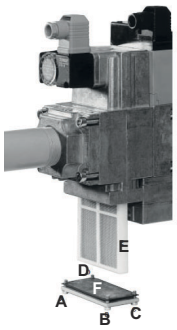

Pressure taps

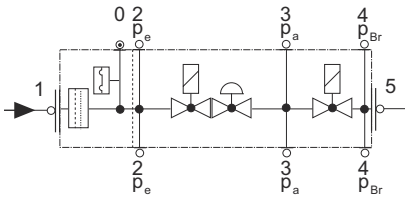

- Check the filter at least once a year!
- Change the filter if the pressure difference between pressure connection 1 and 3 (Fig. 1-Fig. 3)is $\Delta p > 10$ mbar.
- Change the filter if the pressure difference between pressure connection 1 and 3 (Fig. 1-Fig. 3) is twice as high compared to the last check.

You can change the filter without removing the fitting.

1 Interrupt the gas supply closing the on-off valve.
2 Remove screws 1 ÷ 4 using the Allen key n. 3 and remove filter cover 5 in Fig. 5.
3 Remove the filter 6 and replace with a new one.
4 Replace filter cover 5 and tighten screws 1 ÷ 4 without using any force and fasten.
5 Perform leakage and functional test, $p_{max.}$ = 360 mbar.

To clean or remove the filter, proceed as follows:

1 remove the cap unscrewing the fixing screws (A);
2 remove the filtering cartridge (B), clean it using water and soap, blow it with compressed air(or replace it, if necessary)
3 replace the cartridge in its proper position taking care to place it inbetween the guides as not to hamper the cap replacement;

be sure to replace the “O” ring into its place (C) and replace the cover fastening by the proper screws (A).

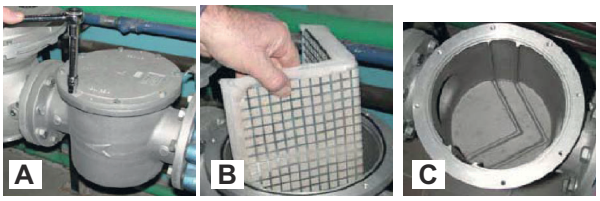

MultiBloc VD-V VD-R Mounting

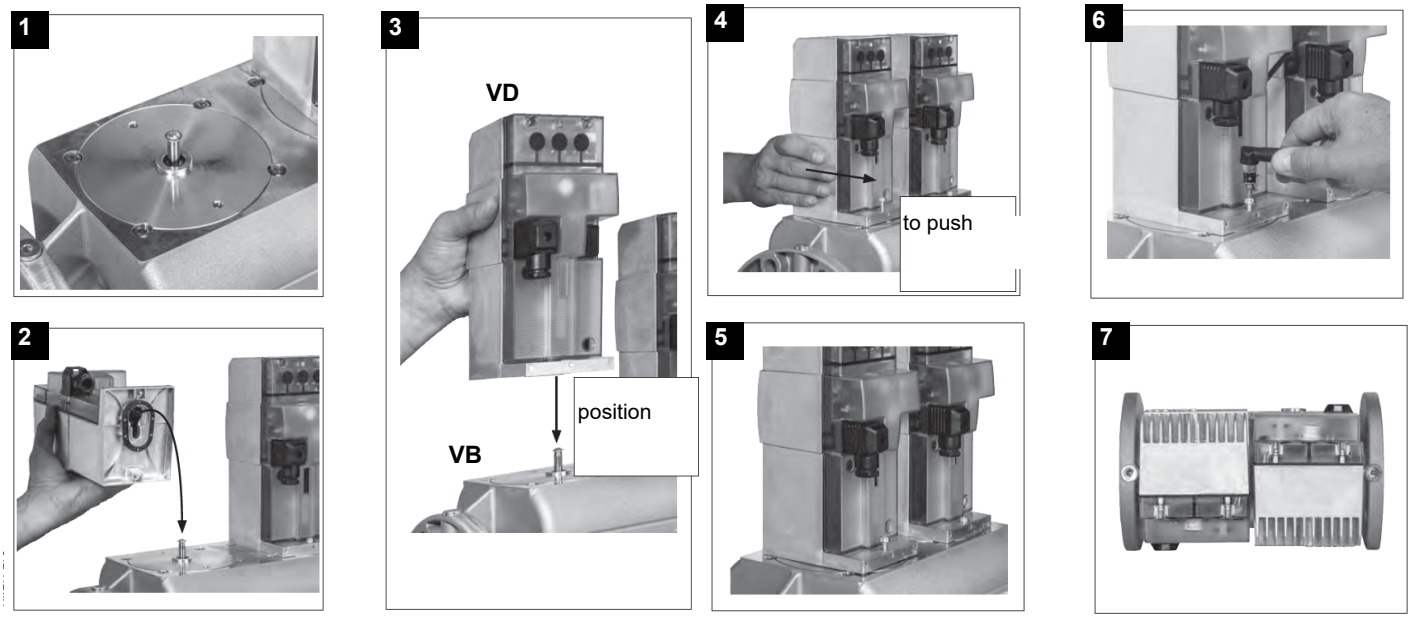

1. Position VD on VB, fig. 2+3.
2. Slide VD forward up to the stop, fig. 4.
3. Screw VD on with 2 M5 screws for each, max. 5 Nm/44 in.-lb., fig. 5/6.
4. VD can be mounted rotated by 180°, fig. 7.

Siemens SKP15 e SKP25 Mounting

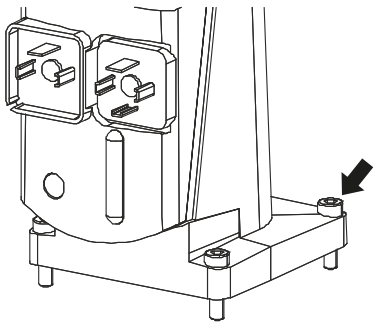

To replace the actuators, turn the screws as shown in the drawing.

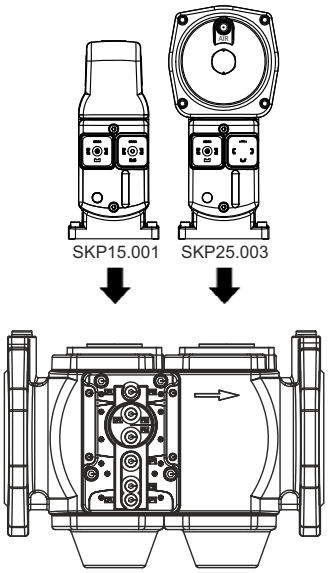

Removing the combustion head

1. Remove the burner cover (**H**).
2. Slide the photocell out of its housing, disconnects the electrodes cables and the oil flexible hoses.
3. Unscrew the screws that block the gas collector (**G**), loose the oil gun joints and remove the combustion head assembly as shown on the following picture.
4. Clean the combustion head by means fo a vacuum cleaner; scrape off the scale by means fo a metallic brush .

Note: to remount the burner, floow the same procedure in the reversed order.

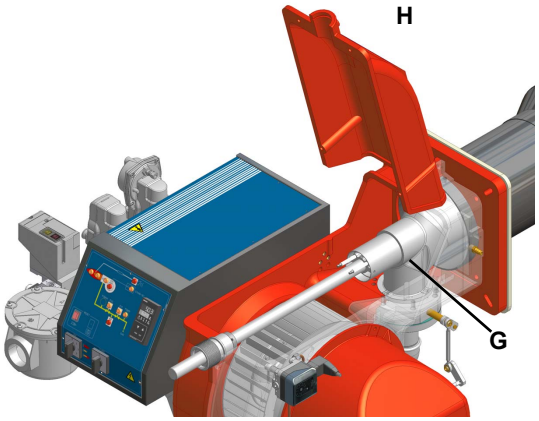

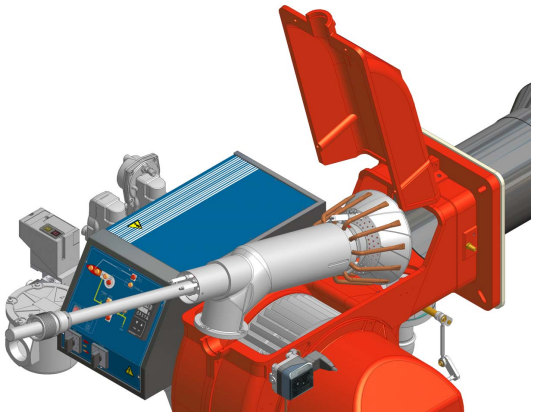

Removing the oil gun, replacing the nozzle and the electrodes

To remove the oil gun, proceed as follows:

1. remove the combustion head as described on the prevoius paragraph;
2. loosen the VL screw and remove the oil gun and the electrodes: check the oil gun, replace it if necessary;
3. after removing the oil gun, unscrew the nozzle and replace it if necessary;
4. in order to replace the electrodes, unscrew the electrodes fixing screws and remove electrodes: place the new electrodes being careful to observe the measures shown on : reassemlbe following the reversed procedure.

Adjusting the electrodes and nozzle position

Adjust the electrodes position, according to the measures (in mm) shown on the next picture.

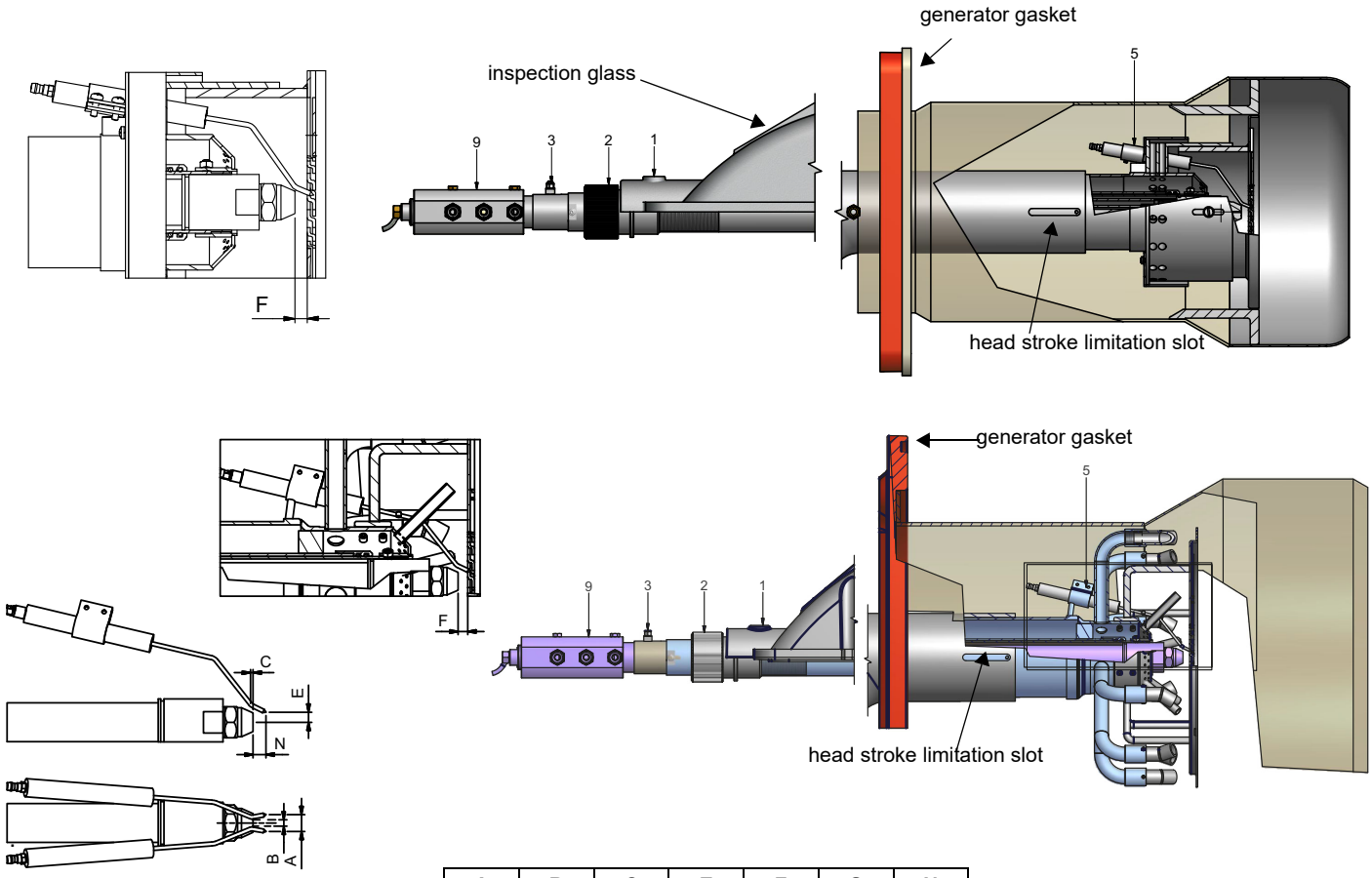

A	B	C	E	F	G	N
10÷15	3÷5	3÷4	10÷13	8÷10	0	10÷13

1 Move the combustion head “all-ahead” by the “head stroke limitation cam”, acting on the ring nut **M**; fix it by means of screw T;

2 place the nozzle to "**F**" mm (see table below) from the diffuser disc, acting on ring nut "**L**"

3 place the electrodes according to measures **E**,**B**,**N** (see table below) acting on screw"**5**" (if the case, correct the measure, by deforming the electrode wire).

Replacing the ignition electrode

To replace the ignition electrode, proceed as follows:

1 Remove the burner cover
2 Disconnect the electrode (E) cable (CE)
3 Remove the combustion head (see par. “Removing the combustion head”)
4 Loose screw (B) that fasten the ignition electrode (E) to the burner pilot (P)
5 Remove the electrode and replace it, referring to the values quoted on figure

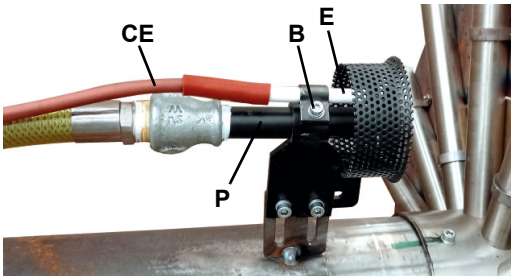

ATTENTION: avoid the electrode to get in touch with metallic parts (blast tube, head, etc.), otherwise the boiler operation would be compromised. Check the electrode position after any intervention on the combustion head.

Ignition pilot electrode positions

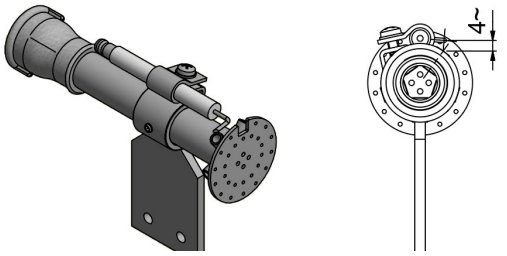

ATTENTION: avoid contact between electrodes and metallic parts (blast tube, head, etc.), otherwise the burner’s operation would be compromised. Check the electrodes position after any intervention on the combustion head.
WARNING: The typical pressure to be adjusted at the pilot gas train pressure stabiliser is approx. 40-50 mbar. However, the correct value is to be adjusted during the first burner start-up phase as burner ignition may vary depending on its operating conditions.

Checking the detection current

To check the detection signal follow the scheme in the picture below. If the signal is less than the value indicated, check the position of the detection electrode or detector, the electrical contacts and, if necessary, replace the electrode or the detector.

Device	Flame detector	Minimum detection signal
Siemens LMV2x/3x	QRA	70 µA (intensity of flame >24%)

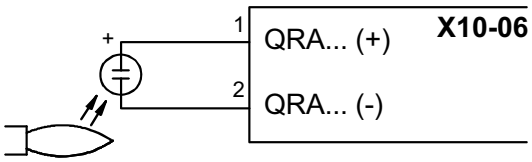

Cleaning and replacing the detection photocell

To clean/replace the detection photocell, proceed as follows:

1 Disconnect the system from the electrical power supply.
2 Shut off the fuel supply;
3 remove the photocell from its slot (see next figure);
4 clean the bulbe if dirty, taking care not to touch it with bare hands;
5 if necessary, replace the bulb;
6 replace the photocell into its slot.

Seasonal stop

To stop the burner in the seasonal stop, proceed as follows:

1 turn the burner main switch to 0 (Off position)
2 disconnect the power mains
3 close the fuel valve of the supply line

Burner disposal

In case of disposal, follow the instructions according to the laws in force in your country about the “Disposal of materials”.

WIRING DIAGRAMS

Refer to the attached wiring diagrams.

WARNING

1 - Electrical supply 230V / 400V 50Hz 3N a.c.
2 - Do not reverse phase with neutral
3 - Ensure burner is properly earthed

TROUBLESHOOTING

Heavy oil operation

	THE BURNER DOESN'T START	THE BURNER REPEATS PRE-PURGE	NOISY FUEL PUMP	THE BURNER DOESN'T START AND STOPS	THE BURNER STARTS AND STOPS	THE BURNER DOESN'T SWITCH TO HIGH FLAME	THE BURNER STOPS DURING OPERATION	THE BURNER STOPS AND REPEATS THE CYCLE DURING OPE-RATION
MAIN SWITCH OPEN	●							
LINE FUSE INTERVENTION	●							
MAX. PRESSURE SWITCH FAULT	●							●
FAN THERMAL CUTOUT INTERVENTION	●							
AUXILIARY RELAIS FUSES INTERVENTION	●							
CONTROL BOX FAULT	●	●		●	●		●	
SERVOCONTROL FAULT						●		
SMOKEY FLAME					●		●	
IGNITION TRANSFORMER FAULT				●				
IGNITION ELECTRODE DIRTY OR WRONG POSITIONED				●				
DIRTY NOZZLE				●			●	
FUEL SOLENOID VALVE DEFECTIVE				●			●	
PHOTORESISTOR DIRTY OR DEFECTIVE					●		●	
HI-LO FLAME THERMOSTAT DEFECTIVE						●		
WRONG POSITION OF SERVOCONTROL CAMS						●		
FUEL PRESSURE TOO LOW				●				
DIRTY FUEL FILTERS			●	●			●	

TROUBLESHOOTING

CAUSE	TROUBLE										
	THE BURNER DOESN'TSTART	CONTINUE WITH PRE-PURGE	DOESN'T START AND LOCK-OUT	DOESN'T START AND REPEATS THE CYCLE	STARTS AND REPEATS THE CYCLE	STARTS AND LOCK-OUT	THE FLAME MONITOR DEVICE DOESN'T GIVECONSENT TO START	DOESEN'T SWITCH TO HIGH FLAME	DOESEN'T RETURN IN LOW FLAME	LOCK-OUT DURING OPERATION	TTURNS OF AND REPEATS CYCLE DURING OPERATION
MAIN SWITCH OPEN	●										
LACK OF GAS	●			●							
MAXIMUM GAS PRESSURE SWITCH DEFECTIVE	●		●								
THERMOSTATS/PRESSURE SWITCHES DEFECTIVES	●			●							●
OVERLOAD TRIPPED INTERVENTION	●										
AUXILIARIES FUSE INTERRUPTED	●										
DEFECTIVE CONTROL BOX	●	●	●			●				●	
DEFECTIVE ACTUATOR	●	●	●								
AIR PRESSURE SWITCH FAULT OR BAD SETTING	●					●	●			●	
MINIMUM GAS PRESSURE SWITCH DEFECTIVE OR GAS FILTER DIRTY	●			●	●		●				●
IGNITION TRANSFORMER FAULT			●								
IGNITION ELECTRODES BAD POSITION			●								
BUTTERFLY VALVE BAD SETTING			●			●					
DEFECTIVE GAS GOVERNOR			●	●	●						●
GAS VALVE DEFECTIVE			●								
BAD CONNECTION OR DEFECTIVE HIGH/LOW FLAME THERMOSTAT OR PRESSURE SWITCH								●	●		
ACTUATOR CAM WRONG SETTING							●	●	●		
UV PROBE DIRTY OR DEFECTIVE			●			●				●	

BURNER EXPLODED VIEW **KPBY9x**

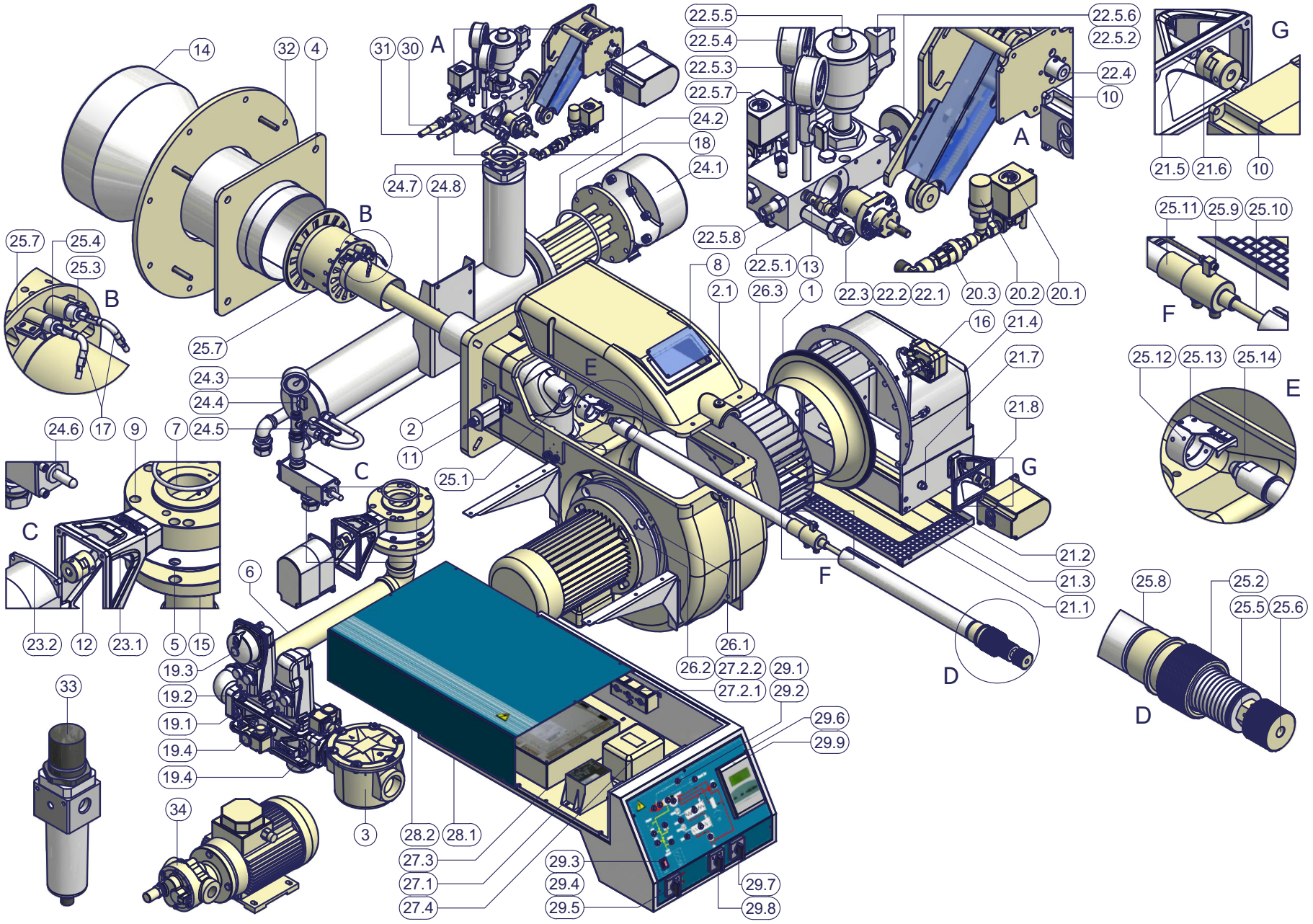

KPBY9x

POS.	DESCRIPTION
1	AIR INLET CONE
2	BURNER HOUSING
2.1	COVER
3	GAS FILTER
4	GENERATOR GASKET
5	GASKET
6	THREADED PIPE
7	O RING
8	INSPECTION GLASS
9	BUTTERFLY GAS VALVE
10	ACTUATOR
11	PHOTOCELL
12	COUPLING
13	AIR GOVERNOR
14	BLAST TUBE
15	FLANGED PIPE
16	AIR PRESSURE SWITCH
17	IGNITION CABLE
18	RESISTOR
19.1	GAS VALVE HOUSING
19.2	SKP ACTUATOR
19.3	SKP ACTUATOR
19.4	GAS PRESSURE
20.1	SOLENOID VALVE
20.2	AIR PRESSURE SWITCH
20.3	ONE-WAY VALVE
21.1	AIR INTAKE DAMPER
21.2	AIR INTAKE DAMPER
21.3	NET
21.4	AIR INTAKE
21.5	LOUVER SHAFT
21.6	COUPLING
21.7	LOUVER SHAFT
21.8	BRACKET

POS.	DESCRIPTION
22.1	GASKET
22.2	GASKET
22.3	PRESSURE GOVERNOR
22.4	CONNECTOR
22.5.1	OIL MANIFOLD
22.5.2	THERMOMETER
22.5.3	CUTOFF MANUAL VALVE
22.5.4	PRESSURE GAUGE
22.5.5	PNEUMATIC OIL VALVE
22.5.6	COMPRESSED AIR SOLENOID VALVE
22.5.7	SOLENOID VALVE
22.5.8	VALVE
23.1	BRACKET
23.2	ACTUATOR
24.1	COVER
24.2	O RING
24.3	PRESSURE GAUGE
24.4	CUTOFF MANUAL VALVE
24.5	CUTOFF MANUAL VALVE
24.6	PRESSURE GOVERNOR
24.7	GASKET
24.8	OIL PRE-HEATER
25.1	GAS MANIFOLD
25.2	RING NUT
25.3	ELECTRODE
25.4	ELECTRODE
25.5	BRACKET
25.6	RING NUT
25.7	COMBUSTION HEAD
25.8	COMBUSTION HEAD EXTESION
25.9	HEAD ADJUSTING SCREW
25.10	HEAD ADJUSTING ROD
25.11	NOZZLE HOLDER
25.12	BUSH

POS.	DESCRIPTION
25.13	BRACKET
25.14	NOZZLE
26.1	MOTOR MOUNTING FLANGE
26.2	MOTOR
26.3	FAN WHEEL
27.1	POWER PACK
27.2.1	THERMOSTAT
27.2.2	THERMOSTAT
27.3	CONTROL BOX
27.4	IGNITION TRANSFORMER
28.1	BOARD
28.2	COVER
29.1	LIGHT
29.2	LIGHT
29.3	PROTECTION
29.4	LOCK-OUT RESET BUTTON
29.5	SWITCH
29.6	FRONT CONTROL PANEL
29.7	SWITCH
29.8	SWITCH
29.9	CONTROL PANEL
30	FLEXIBLE HOSE
31	FLEXIBLE HOSE
32	COUNTERFLANGE
33	FILTER
34	PUMP

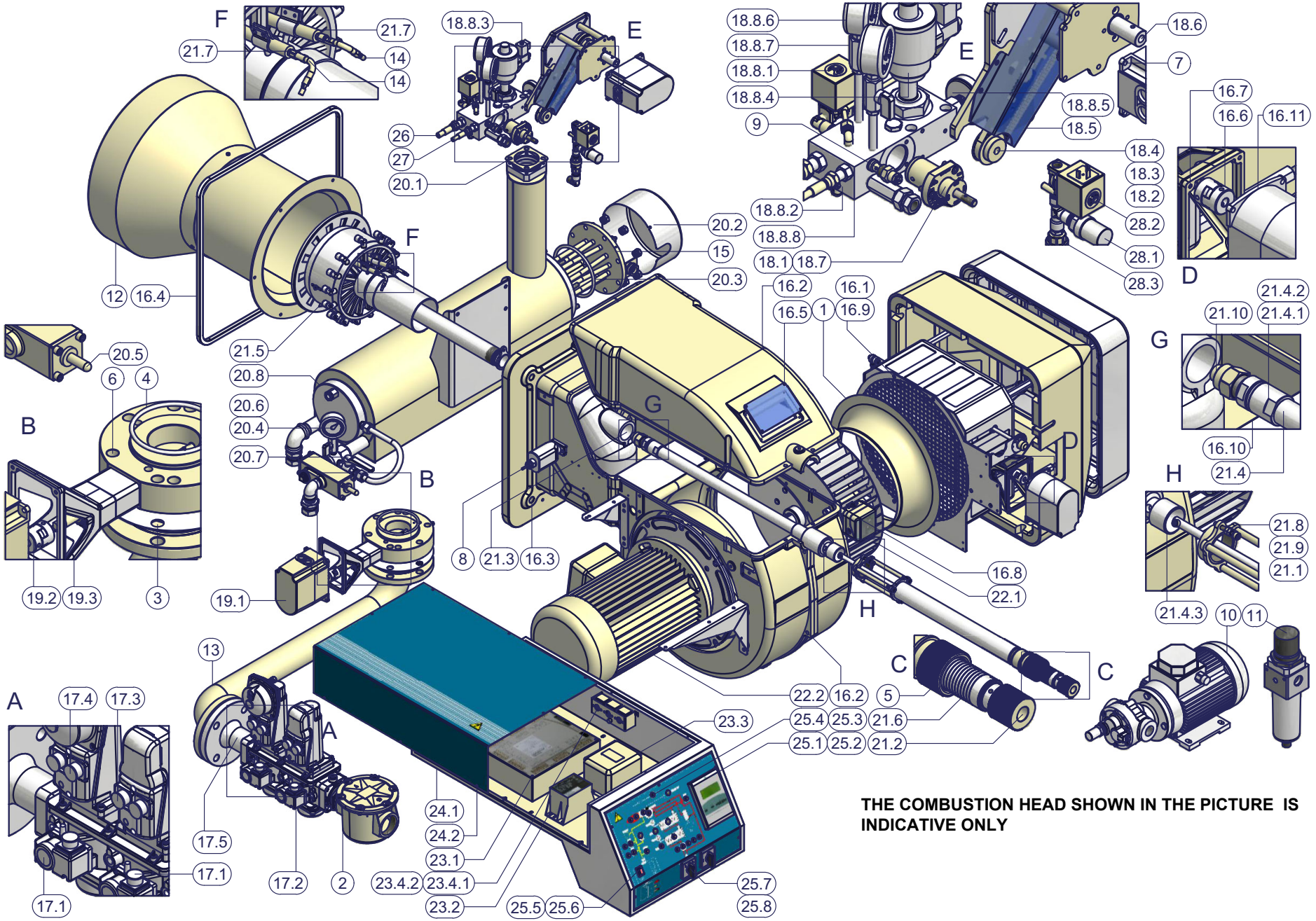

THE COMBUSTION HEAD SHOWN IN THE PICTURE IS INDICATIVE ONLY

POS.	DESCRIPTION
1	AIR INLET CONE
2	GAS FILTER
3	GASKET
4	O RING
5	RING NUT
6	BUTTERFLY GAS VALVE
7	ACTUATOR
8	PHOTOCELL
9	AIR GOVERNOR
10	PUMP
11	FILTER
12	BLAST TUBE
13	FLANGED PIPE
14	IGNITION CABLE
15	RESISTOR
16.1	NET
16.2	BURNER HOUSING
16.3	FLANGE
16.4	CERAMIC FIBRE ROPE
16.5	INSPECTION GLASS
16.6	COUPLING
16.7	BRACKET
16.8	AIR PRESSURE SWITCH
16.9	AIR INTAKE DAMPER
16.10	BRACKET
16.11	ACTUATOR
17.1	GAS PRESSURE
17.2	GAS VALVE HOUSING
17.3	SKP ACTUATOR
17.4	SKP ACTUATOR
17.5	FLANGED PIPE
18.1	GASKET
18.2	BAND WHEEL
18.3	BELT

POS.	DESCRIPTION
18.4	BAND WHEEL
18.5	SUMP
18.6	CONNECTOR
18.7	PRESSURE GOVERNOR
18.8.1	SOLENOID VALVE
18.8.2	VALVE
18.8.3	COMPRESSED AIR SOLENOID VALVE
18.8.4	PNEUMATIC OIL VALVE
18.8.5	THERMOMETER
18.8.6	PRESSURE GAUGE
18.8.7	MANUAL VALVE
18.8.8	OIL MANIFOLD
19.1	ACTUATOR
19.2	COUPLING
19.3	BRACKET
20.1	GASKET
20.2	COVER
20.3	O RING
20.4	PRESSURE GAUGE
20.5	PRESSURE GOVERNOR
20.6	MANUAL VALVE
20.7	CUTOFF MANUAL VALVE
20.8	OIL PRE-HEATER
21.1	HEAD ADJUSTING ROD
21.2	RING NUT
21.3	GAS MANIFOLD
21.4	NOZZLE HOLDER
21.4.1	NOZZLE HOLDER
21.4.2	NOZZLE HOLDER
21.4.3	OIL MANIFOLD
21.5	COMBUSTION HEAD
21.6	COMBUSTIONE HEAD EXTENSION
21.7	ELECTRODE
21.8	BUSH

POS.	DESCRIPTION
21.9	ROD
21.10	NOZZLE
22.1	FAN WHEEL
22.2	MOTOR
23.1	CONTROL BOX
23.2	POWER PACK
23.3	IGNITION TRANSFORMER
23.4.1	THERMOSTAT
23.4.2	THERMOSTAT
24.1	BOARD
24.2	COVER
25.1	CONTROL PANEL
25.2	FRONT CONTROL PANEL
25.3	LIGHT
25.4	LIGHT
25.5	LOCK-OUT RESET BUTTON
25.6	PROTECTION
25.7	SWITCH
25.8	SWITCH
26	FLEXIBLE HOSE
27	FLEXIBLE HOSE
28.1	AIR PRESSURE SWITCH
28.2	SOLENOID VALVE
28.3	ONE-WAY VALVE

USER MANUAL OF MULTI-THERMOSTAT

MCX06C

MCX06C is a multi-thermostat with four 100k NTC inputs. It can control up to 4 temperatures showing them (not more than 2 at the same time) on a couple of displays.
It is used to check and adjust oil heater temperatures.

User interface:
Device:

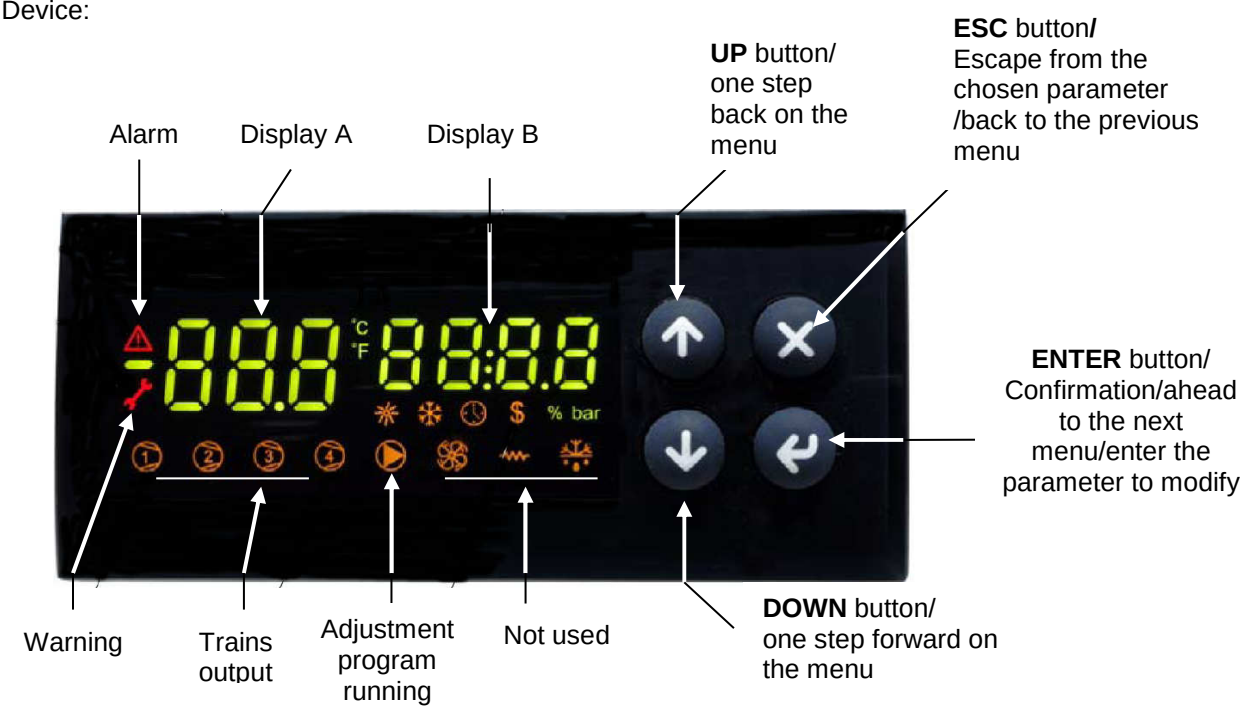

Note :
In normal operation, the display A shows the oil tank resistor temperature (probe Pb1).
In normal operation, the display B shows the oil output temperature (probe Pb3).

Connections from terminal side:

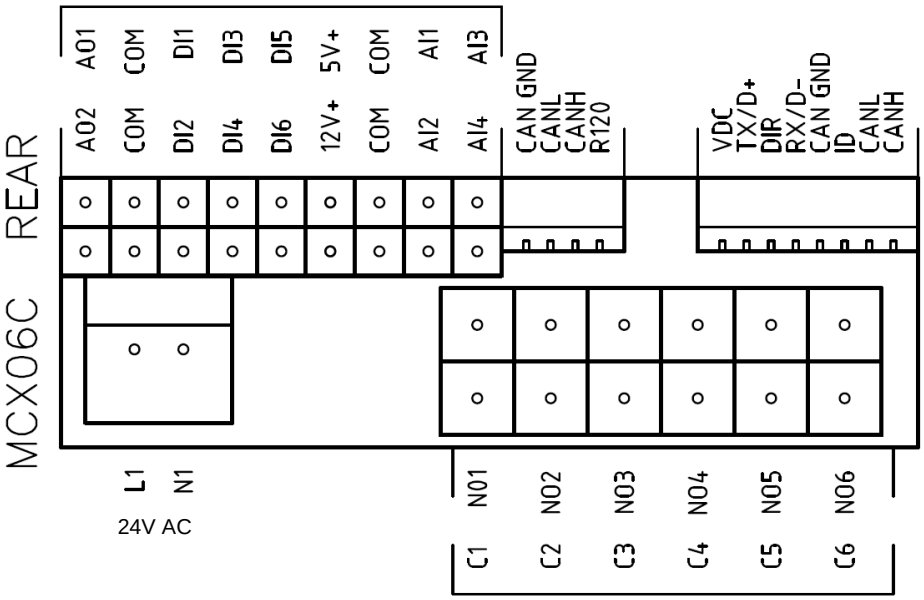

Probe connection:
input **AI1** = probe **Pb1** = set-point "**tr**" = oil heater temperature probe;
input **AI2** = probe **Pb2** = set-point "**tCI**" = plant consent temperature probe (when installed);
input **AI3** = probe **Pb3** = set-point "**OIL**" = oil heater output temperature probe (PID regulation);
input **AI4** = probe **Pb4** = set-point "**tcn**" = oil heater consent temperature probe.

Menu:
To enter the menu below, keep pushing **ENTER** for more than 3 s.

Menu code	Sub-menu code	Function	Notes
Prb		Probes values	You can see in sequence the 4 probe values (UP and DOWN keys): the probe code is on display A (Pb1,..., Pb4) and the probe value is on display B (not fitted or out of work probes show "----").
Log		Login	It defines the access level to menu and parameters (password)
	PAS	Password	Password input
Par		Parameters menu	Access to parameters (you have to login first)
	CnF	Configuration menu	Parameter configuration
	rEG	Regulation menu	Set to set-point, probe, thresholds etc.
ALA		Alarm menu	Access to alarm management
	Act	Active alarms	Show the active alarms
	rES	Reset alarms & Warning	Reset of the manual reset alarms and warning
Loc		Lock/Unlock functions	Not used
InF	rEL	Software version	Installed software version
tUN		Autotuning	Activation On, deactivation ESC PID parameter autotuning

Alarms & Warning:
When the red triangle on the top left lights, one or more alarms are activated.
When the red key on the left lights, the output N05-C5 is active and the relay **KTRS** switches the resistors OFF.
Check the reason, correct the failure and, as soon as the temperature is lower than **trS**, reset it through **ALA**/**rES .**
In order to show active alarms and warnings, select the relevant menu through **ALA**/**Act**.and, using the **UP** and **DOWN** buttons, scroll the lines.
In order to perform the manual reset, select **ALA**/**rES**.

Code	Description	Sourse	Active simbol	Reset type
trS	High temperature resistors alarm	probe Pb4 > value trS	red key	Manual
EP1	Probe Pb1 fault	Probe Pb1 fault	red triangle	Automatic
EP2	Probe Pb2 fault	Probe Pb2 fault	red triangle	Automatic
EP3	Probe Pb3 fault	Probe Pb3 fault	red triangle	Automatic
EP4	Probe Pb4 fault	Probe Pb4 fault	red triangle	Automatic

Set point adjustment:
All the parameters inside the **Par** menu are locked by a password.
The user can modify only set points (menu **rEG**), without using any passwords.
The oil viscosity at the nozzle, should be about 1,5°E, which guarantees correct and safe functioning of the burner.
The temperature values in the table, guarantee the respect of that parameter and are valid when the pre heating tank is installed on the burner. For different configurations , please refer to the chapter "Recommendations to design heavy oil feeding plants" in the burner manual.
Here below recommended set points:

Menu path				Oil viscosity at 50 °C according to the letter show n in the burner model				
				P	**N**	**E**	**D**	**H**
				89 cSt	< 50 cSt	> 50 cSt < 110 cSt	> 110 cSt < 400 cSt	> 400 cSt < 4000 cSt
				12 °E	< 7°E	> 7 °E < 15 °E	> 15 °E < 50 °E	> 50 °E < 530 °E
Par								
rEG	Pb1	tr	Oil heater temperature probe	parameter not visible				
	Pb2	tCI	Plant consent temperature probe (when installed)	20 °C	70 °C	70 °C	70 °C	---
	Pb3	Oil	oil heater output temperature probe (PID regulation);	60-70 °C	110-120 °C	120-130 °C	130-140 °C	140-150 ° C
		SP0	Set-point oil heater with oil pump stopped (stand-by)	45 °C	120 °C	130 °C	140 °C	150 °C
	Pb4	tcn	Oil heater consent temperature probe	40 °C	100 °C	100 °C	110 °C	120 °C
		trS	Safety temperature tank resistors (manual reset)	120 °C	190-200 °C	190-200 °C	190-200 °C	190-200 °C

The above temperature values are suggested and refer to a plant designed according to the prescriptions in the burner user manual. The suggested values can change in reference to the fuel oil specifications.

C.I.B. UNIGAS S.p.A.
Via L.Galvani, 9 - 35011 Campodarsego (PD) - ITALY
Tel. +39 049 9200944 - Fax +39 049 9200945/9201269
web site: www.cibunigas.it - e-mail: cibunigas@cibunigas.it

Note: specifications and data subject to change. Errors and omissions excepted.

AZL2x - LMV2x/3x
Burner Management System

Service manual

M12916CD Rev. 3.4 03/2023

INDEX

MICROPROCESSOR CONTROLLED SYSTEM 6

User interface 6

Parameters level (heating engineer) 8

Setting menu 9

Block 000: Internal Parameter 10

Block 100: General information 10

Block 200: Burner control 13

Block 400: Setting air/fuel ratio curves 25

Block 500: Air/fuel ratio control 26

Block 600: Actuators 28

Block 700: Error history 31

Block 900: Process data 32

Actuators references 33

Gas proving system 33

Air-fuel curve points 33

COMMISSIONING THE BURNER 34

Warm setting 38

Cold setting 39

BURNER STARTUP WITH LMV2x ALREADY PROGRAMMED 40

Reset / manual lockout 42

Timeout for menu operation 42

Entering the Parameter levels 43

Info level 44

Service level 46

PHASES LIST 47

BACKUP PARAMETER WITH AZL2x 48

RESTORE PARAMETER FROM AZL2x TO LMV.. 49

WIRING DIAGRAM 65

Wiring connection for LMV20 65

Wiring variants for LMV27 66

Wiring variants for LMV26 67

Wiring variants for LMV37 68

DANGERS, WARNINGS AND NOTES OF CAUTION

THIS MANUAL IS SUPPLIED AS AN INTEGRAL AND ESSENTIAL PART OF THE PRODUCT AND MUST BE DELIVERED TO THE USER.

INFORMATION INCLUDED IN THIS SECTION ARE DEDICATED BOTH TO THE USER AND TO PERSONNEL FOLLOWING PRODUCT INSTALLATION AND MAINTENANCE.

THE USER WILL FIND FURTHER INFORMATION ABOUT OPERATING AND USE RESTRICTIONS, IN THE SECOND SECTION OF THIS MANUAL. WE HIGHLY RECOMMEND TO READ IT.

CAREFULLY KEEP THIS MANUAL FOR FUTURE REFERENCE.

1) GENERAL INTRODUCTION

- The equipment must be installed in compliance with the regulations in force, following the manufacturer's instructions, by qualified personnel.
- Qualified personnel means those having technical knowledge in the field of components for civil or industrial heating systems, sanitary hot water generation and particularly service centres authorised by the manufacturer.
- Improper installation may cause injury to people and animals, or damage to property, for which the manufacturer cannot be held liable.
- Remove all packaging material and inspect the equipment for integrity.

In case of any doubt, do not use the unit - contact the supplier.

The packaging materials (wooden crate, nails, fastening devices, plastic bags, foamed polystyrene, etc), should not be left within the reach of children, as they may prove harmful.

- Before any cleaning or servicing operation, disconnect the unit from the mains by turning the master switch OFF, and/or through the cut-out devices that are provided.
- Make sure that inlet or exhaust grilles are unobstructed.
- In case of breakdown and/or defective unit operation, disconnect the unit. Make no attempt to repair the unit or take any direct action.

Contact qualified personnel only.

Units shall be repaired exclusively by a servicing centre, duly authorised by the manufacturer, with original spare parts.

Failure to comply with the above instructions is likely to impair the unit's safety.

To ensure equipment efficiency and proper operation, it is essential that maintenance operations are performed by qualified personnel at regular intervals, following the manufacturer's instructions.

- When a decision is made to discontinue the use of the equipment, those parts likely to constitute sources of danger shall be made harmless.
- In case the equipment is to be sold or transferred to another user, or in case the original user should move and leave the unit behind, make sure that these instructions accompany the equipment at all times so that they can be consulted by the new owner and/or the installer.
- For all the units that have been modified or have options fitted then original accessory equipment only shall be used.
- This unit shall be employed exclusively for the use for which it is meant. Any other use shall be considered as improper and, therefore, dangerous.

The manufacturer shall not be held liable, by agreement or otherwise, for damages resulting from improper installation, use and failure to comply with the instructions supplied by the manufacturer.The occurrence of any of the following circustances may cause explosions, polluting unburnt gases (example: carbon monoxide CO), burns, serious harm to people, animals and things:

- Failure to comply with one of the WARNINGS in this chapter
- Incorrect handling, installation, adjustment or maintenance of the burner
- Incorrect use of the burner or incorrect use of its parts or optional supply

2) SPECIAL INSTRUCTIONS FOR BURNERS

- The burner should be installed in a suitable room, with ventilation openings complying with the requirements of the regulations in force, and sufficient for good combustion.
- Only burners designed according to the regulations in force should be used.
- This burner should be employed exclusively for the use for which it was designed.
- Before connecting the burner, make sure that the unit rating is the same as delivery mains (electricity, gas oil, or other fuel).
- Observe caution with hot burner components. These are, usually, near to the flame and the fuel pre-heating system, they become hot during the unit operation and will remain hot for some time after the burner has stopped.

When the decision is made to discontinue the use of the burner, the user shall have qualified personnel carry out the following operations:

a Remove the power supply by disconnecting the power cord from the mains.

b) Disconnect the fuel supply by means of the hand-operated shut-off valve and remove the control handwheels from their spindles.

Special warnings

- Make sure that the burner has, on installation, been firmly secured to the appliance, so that the flame is generated inside the appliance firebox.
- Before the burner is started and, thereafter, at least once a year, have qualified personnel perform the following operations:

a set the burner fuel flow rate depending on the heat input of the appliance;

b set the flow rate of the combustion-supporting air to obtain a combustion efficiency level at least equal to the lower level required by the regulations in force;

c check the unit operation for proper combustion, to avoid any harmful or polluting unburnt gases in excess of the limits permitted by the regulations in force;

d make sure that control and safety devices are operating properly;

e make sure that exhaust ducts intended to discharge the products of combustion are operating properly;

f on completion of setting and adjustment operations, make sure that all mechanical locking devices of controls have been duly tightened;

g make sure that a copy of the burner use and maintenance instructions is available in the boiler room.

- In case of a burner shut-down, reser the control box by means of the RESET pushbutton. If a second shut-down takes place, call the Technical Service, **without trying to RESET further**.
- The unit shall be operated and serviced by qualified personnel only, in compliance with the regulations in force.

3) GENERAL INSTRUCTIONS DEPENDING ON FUEL USED

3a) ELECTRICAL CONNECTION

- For safety reasons the unit must be efficiently earthed and installed as required by current safety regulations.
- It is vital that all saftey requirements are met. In case of any doubt, ask for an accurate inspection of electrics by qualified personnel, since the manufacturer cannot be held liable for damages that may be caused by failure to correctly earth the equipment.
- Qualified personnel must inspect the system to make sure that it is adequate to take the maximum power used by the equipment shown on the equipment rating plate. In particular, make sure that the system cable cross section is adequate for the power absorbed by the unit.
- No adaptors, multiple outlet sockets and/or extension cables are permitted to connect the unit to the electric mains.
- An omnipolar switch shall be provided for connection to mains, as required by the current safety regulations.
- The use of any power-operated component implies observance of a few basic rules, for example:
  - do not touch the unit with wet or damp parts of the body and/or with bare feet;
  - do not pull electric cables;

- do not leave the equipment exposed to weather (rain, sun, etc.) unless expressly required to do so;
- do not allow children or inexperienced persons to use equipment;

- The unit input cable shall not be replaced by the user.

In case of damage to the cable, switch off the unit and contact qualified personnel to replace.

When the unit is out of use for some time the electric switch supplying all the power-driven components in the system (i.e. pumps, burner, etc.) should be switched off.

3b) FIRING WITH GAS, LIGHT OIL OR OTHER FUELS

GENERAL

- The burner shall be installed by qualified personnel and in compliance with regulations and provisions in force; wrong installation can cause injuries to people and animals, or damage to property, for which the manufacturer cannot be held liable.
- Before installation, it is recommended that all the fuel supply system pipes be carefully cleaned inside, to remove foreign matter that might impair the burner operation.
- Before the burner is commissioned, qualified personnel should inspect the following:

a the fuel supply system, for proper sealing;
b the fuel flow rate, to make sure that it has been set based on the firing rate required of the burner;
c the burner firing system, to make sure that it is supplied for the designed fuel type;
d the fuel supply pressure, to make sure that it is included in the range shown on the rating plate;
e the fuel supply system, to make sure that the system dimensions are adequate to the burner firing rate, and that the system is equipped with all the safety and control devices required by the regulations in force.

- When the burner is to remain idle for some time, the fuel supply tap or taps should be closed.

SPECIAL INSTRUCTIONS FOR USING GAS

Have qualified personnel inspect the installation to ensure that:

a the gas delivery line and train are in compliance with the regulations and provisions in force;
b all gas connections are tight;
c the boiler room ventilation openings are such that they ensure the air supply flow required by the current regulations, and in any case are sufficient for proper combustion.

- Do not use gas pipes to earth electrical equipment.
- Never leave the burner connected when not in use. Always shut the gas valve off.
- In case of prolonged absence of the user, the main gas delivery valve to the burner should be shut off.

Precautions if you can smell gas

a do not operate electric switches, the telephone, or any other item likely to generate sparks;
b immediately open doors and windows to create an air flow to purge the room;
c close the gas valves;
d contact qualified personnel.

- Do not obstruct the ventilation openings of the room where gas appliances are installed, to avoid dangerous conditions such as the development of toxic or explosive mixtures.

DIRECTIVES AND STANDARDS

Gas burners

European directives:

- Directive 2009/142/EC - Gas Appliances;
- Directive 2006/95/EC on low voltage;
- Directive 2004/108/EC on electromagnetic compatibility

Harmonised standards :

-UNI EN 676 (Gas Burners;-EN 55014-1Electromagnetic compatibility - Requirements for household appliances, electric tools and similar apparatus.

-CEI EN 60335-1(Household and similar electrical appliances - Safety. Part 1: General requirements;

-EN 50165 (Electrical equipment of non-electric appliances for household and similar purposes. Safety requirements.

-EN 60335-2-102 (Household and similar electrical appliances. Safety. Particular requirements for gas, oil and solid-fuel burning appliances having electrical connections)

Light oil burners

European directives:

- Directive 2006/95/EC on low voltage;
- Directive 2004/108/EC on electromagnetic compatibility

Harmonised standards :

-CEI EN 60335-1(Household and similar electrical appliances - Safety. Part 1: General requirements;

-UNI 267 Automatic forced draught burners for liquid fuels

-EN 55014-1Electromagnetic compatibility - Requirements for household appliances, electric tools and similar apparatus.

-EN 50165 (Electrical equipment of non-electric appliances for household and similar purposes. Safety requirements.

National standards :

-UNI 7824: Monobloc nebulizer burners for liquid fuels. Characteristics and test methods

Heavy oil burners

European directives:

- Directive 2006/95/EC on low voltage;
- Directive 2004/108/EC on electromagnetic compatibility

Harmonised standards :

-CEI EN 60335-1 Household and similar electrical appliances - SafetyPart 1: General requirements;

-EN 55014-1Electromagnetic compatibility - Requirements for household appliances, electric tools and similar apparatus.

- EN 50165 Electrical equipment of non-electric appliances for household and similar purposes. Safety requirements.

National standards :

-UNI 7824: Monobloc nebulizer burners for liquid fuels. Characteristics and test methods

Gas - Light oil burners

European directives:

- Directive 2009/142/EC - Gas Appliances;
- Directive 2006/95/EC on low voltage;
- Directive 2004/108/EC on electromagnetic compatibility

Harmonised standards :

-UNI EN 676 Gas Burners

-EN 55014-1Electromagnetic compatibility - Requirements for household appliances, electric tools and similar apparatus.

-UNI 267 Automatic forced draught burners for liquid fuels

-CEI EN 60335-1(Household and similar electrical appliances - Safety. Part 1: General requirements;

- EN 50165 Electrical equipment of non-electric appliances for household and similar purposes. Safety requirements.

National standards :

-UNI 7824: Monobloc nebulizer burners for liquid fuels. Characteristics and test methods

Gas - Heavy oil burners

European directives:

- Directive 2009/142/EC - Gas Appliances;
- Directive 2006/95/EC on low voltage;
- Directive 2004/108/EC on electromagnetic compatibility

Harmonised standards :

-EN 55014-1Electromagnetic compatibility - Requirements for household appliances, electric tools and similar apparatus.

-UNI EN 676 (Gas Burners;

-CEI EN 60335-1(Household and similar electrical appliances - Safety. Part 1: General requirements;

- EN 50165 Electrical equipment of non-electric appliances for household and similar purposes. Safety requirements.

National standards :

-UNI 7824: Monobloc nebulizer burners for liquid fuels. Characteristics and test methods

Industrial burners

European directives:

- Directive 2009/142/EC - Gas Appliances;
- Directive 2006/95/EC on low voltage;
- Directive 2004/108/EC on electromagnetic compatibility

Harmonised standards :

-EN 55014-1Electromagnetic compatibility - Requirements for household appliances, electric tools and similar apparatus.

-EN 50165 Electrical equipment of non-electric appliances for household and similar purposes. Safety requirements.

-UNI EN 746-2: Industrial thermoprocessing equipment

Burner data plate

For the following information, please refer to the data plate:

- burner type and burner model: must be reported in any communication with the supplier
- burner ID (serial number): must be reported in any communication with the supplier
- date of production (year and month)
- information about fuel type and network pressure

Type	--
Model	--
Year	--
S.Number	--
Output	--
Oil Flow	--
Fuel	--
Category	--
Gas Pressure	--
Viscosity	--
El.Supply	--
El.Consump.	--
Fan Motor	--
Protection	--
Drwaing n°	--
P.I.N.	--

SYMBOLS USED

WARNING!

Failure to observe the warning may result in irreparable damage to the unit or damage to the environment

DANGER!

Failure to observe the warning may result in serious injuries or death.

WARNING!

Failure to observe the warning may result in electric shock with lethal consequences

MICROPROCESSOR CONTROLLED SYSTEM

The control system is made of the Siemens LMV central unit that performs all the burner control functions and of the Siemens AZL local programming unit that interfaces the system with the user.

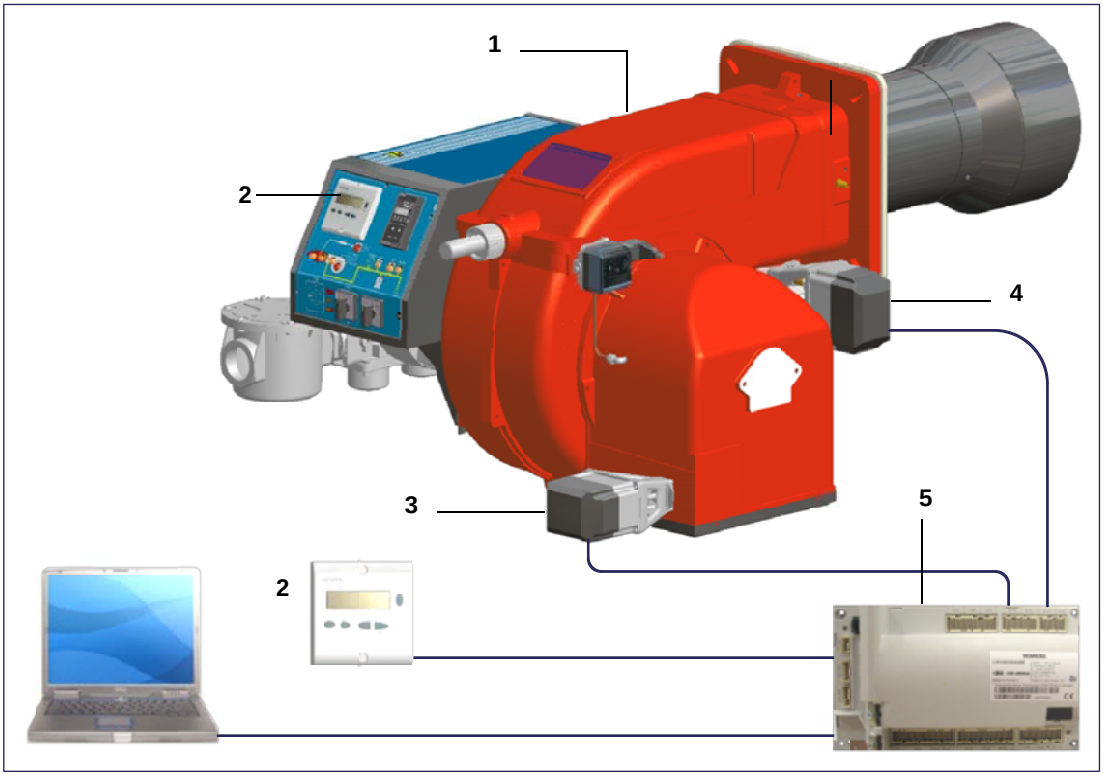

Keys

1 Burner
2 AZL2..
3 Air actuator
4 Fuel actuator
5 LMV2..

User interface

The AZL2x.. display/programming unit is shown below:

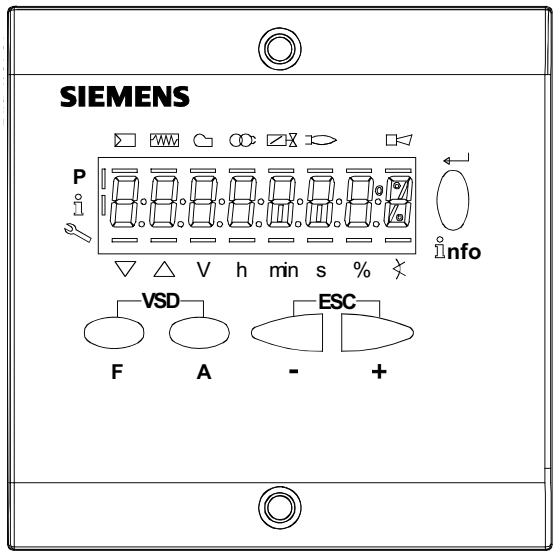

The keys functions are the following:

Key F

Used to adjust the “fuel” actuator position (**F**uel): :

While pressing the **F** key, the “fuel” actuator position can be changed by means of the **+** and **-** keys.

Key A

Used to adjust the “air” actuator position (**A**ir):

While pressing the **A** key, the “air” actuator position can be changed by means of the **+** and **-** keys.

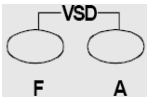

Key F + A

While pressing the two keys contemporarly, the **code** message will appear: by entering the proper password it is possible to access the **Service** mode.

Info and Enter keys

Used for **Info** and **Service** menues

Used as **Enter** key in the setting modes

Used as **Reset** key in the burner operation mode

Used to enter a lower level menu

-Key -

Used to decrease a a value

Used to enter Info and Serivce during the curve adjustments

+Key +

Used to increase a a value

Used to enter Info and Serivce during the curve adjustments

Keys (+ & -)= ESC

By pressing + and - at the same time, the ESCAPE function is perfomed:

to enter a lower level menu

The display will show these data:

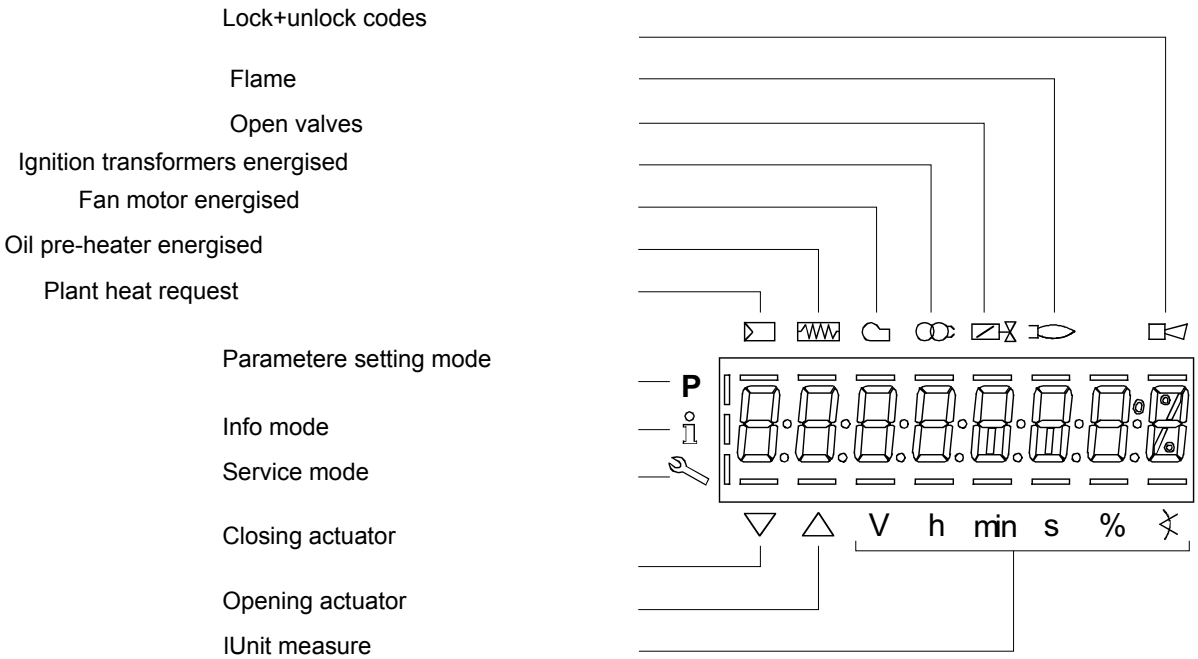

Parameters level (heating engineer)

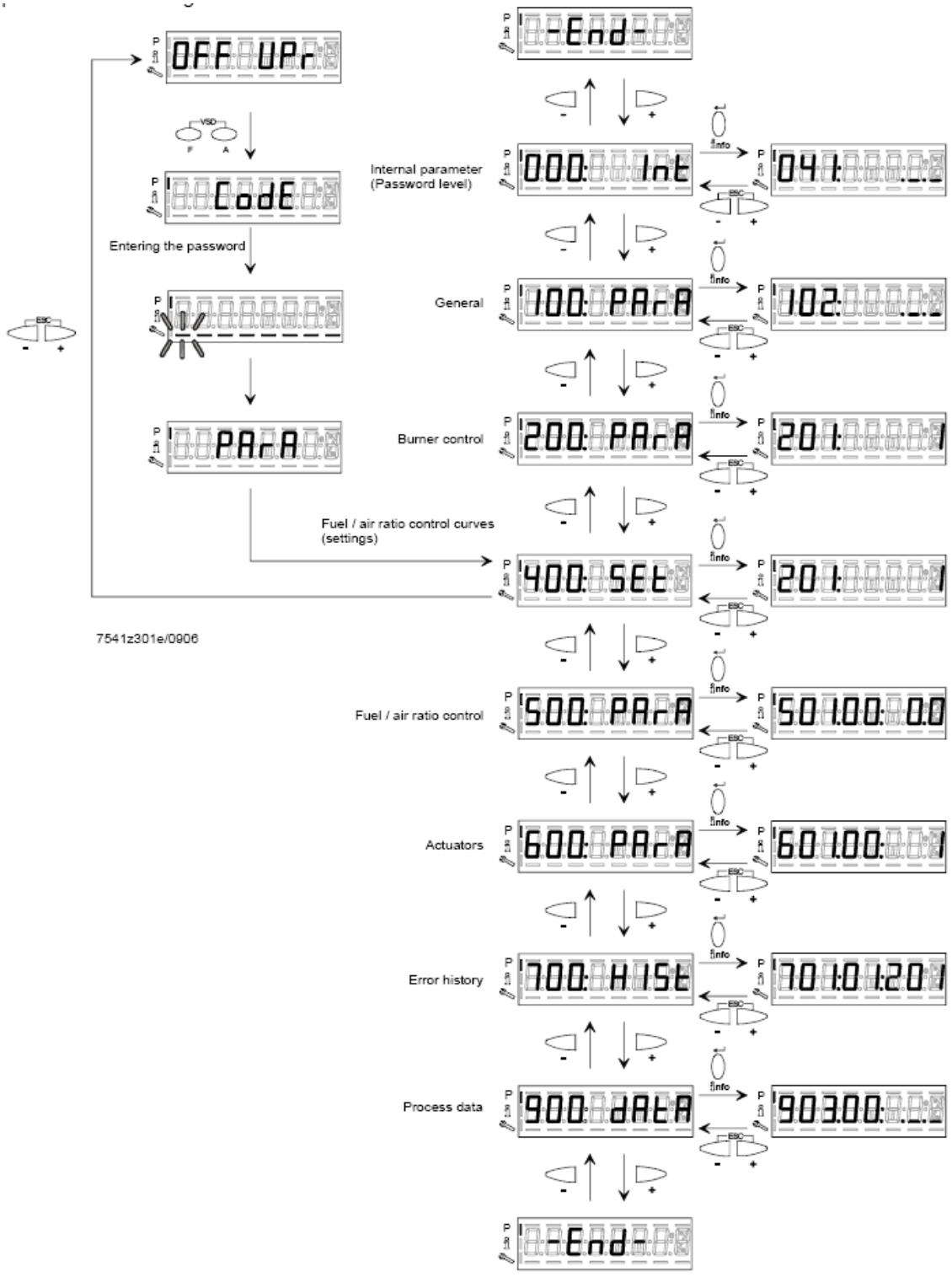

7541z301e/0906

Setting menu

The seeting menu is divided into different blocks:

Bloc.	Descrizione	Description	Password
000		Internal parameters	OEM / Service
100	Informazioni generali	General	OEM / Service / Info
200	Controllo bruciatore	Burner control	OEM / Service
300	Controllo bruciatore (solo **LMV26**)	Burner control (**LMV26** only)	OEM / Service
400	Curve rapporto	Ratio curves	OEM / Service
500	Controllo rapporto	Ratio control	OEM / Service
600	Servocomandi	Actuators	OEM / Service
700	Storico errori	Error history	OEM / Service / Info
900	Dati di processo	Process data	OEM / Service / Info

The access to the various blocks is allowed by passwords. Passwords are divided into three levels:

- User level (info): no password needed
- Service level (Service)
- Manifacturer level (OEM)

Block 000: Internal Parameter

Param.	Descrizione	Description	Password
041	Password livello assistenza (ingegnere del calore)	Password heating engineer (4 characters)	OEM
042	Password livello OEM (costruttore del bruciatore)	Password OEM (5 characters)	OEM
050	Start backup/restore via AZL2x/PC	Start backup / restore via AZL2.../ PC software (set parameter to 1) Index 0: Create backup Index 1: Execute restore Error diagnostics via negative values (see error code 137)	SO
055	Identificazione bruciatore (backup dati)	Burner identification of AZL2... backup data set	SO
056		ASN extraction of AZL2... backup data set	SO
057	Versione software creata dal set dati backup	Software version when creating the AZL2... backup data set	Service / Info

Block 100: General information

Param.	Descrizione	Description	Password	LMV20 LMV27	LMV26	LMV37
102	Data produzione (in gg-mm-aa)	Identification date (yy-mm-dd)	Service / Info	x	x	x
103	Numero identificativ	Identification number	Service / Info	x	x	x
104	Set di parametri preimpostati: codice cliente	Preselected parameter set: customer code	Service / Info	x	x	x
105	Set di parametri preimpostati: versione	Preselected parameter set: version	Service / Info	x	x	x
107	Versione softwar	Software version	Service / Info	x	x	x
108	Variante software	Software variant	Service / Info	x	x	x
113	Identificativo bruciatore	Burner identification	Service / Info SO password for writing	x	x	x
121	Potenza manuale Valore “Undefined = automatico Impostare un valore inferiore a = in modo che il display mostri --- altrimenti, il controllore rimarrà sempre in stand-by e il display mostrerà la scritta OFF lampeggiante.	Manual output Undefined = automatic mode	Service / Info	x	x	x

125	Frequenza di rete 0 = 50 Hz 1 = 60 Hz	Mains frequency 0 = 50 Hz 1 = 60 Hz	Service / Info	x	x	x
126	Luminosità display	Display brightness	Service / Info	x	x	x
127	Tempo dopo il quale, se non viene premuto nessun tast il software esce dalla modalita programmazione (valore fabbrica = 60min - range impostazione: 10 - 120 min)	Timeout for menu operation (default value = 60min - range: 10 - 120 min)	OEM	x	x	x
130	Azzeramento Storico errori Impostare prima il parametro a 1 e poi a 2; se compare “0” = lo Storico è stato azzerato se compare “-1” = scaduto tempo sequ. 1_2	Delete display of error history To delete display : set to 1 then to 2; return value “0” = error history deleted return value “-1” = timeout of 1_2 sequence	OEM / Service	x	x	x
141	Attivazione comunicazione bus 0 = off 1 = Modbus 2 = riserva	Operating mode BACS 0 = off 1 = Modbus 2 = reserved	OEM / Service		x	x
142	Tempo d'arresto in caso di guasto di comunicazione	Setback time in the event of communication breakdown	OEM / Service		x	x
143	Riserva	Reserved	Service / Info		x	x
144	Riserva	Reserved	OEM / Service		x	x
145	Indirizzo dispositivo per Modbus	Device address for Modbus	OEM / Service		x	x
146	Velocità di trasmissione per Modbus	Baud rate for Modbus	OEM / Service		x	x
147	Parità per Modbus	Parity for Modbus	OEM / Service		x	x
148	on una interruzione della comunicazione bus: 0 ... 19.9 = bruciatore spento 20 ... 100 = 20 ... 100% potenza Per il funzionamento multistadio: 0 = bruciatore OFF, P1, P2, P3 non valido = nessun standard di prestazione della LMV.	Performance standard at interruption of communication with building automation For modulation operation the setting range is as fol-lows: 0…19.9 = burner off 20…100 = 20…100% burner rating For multistage operation apply to setting range: 0 = burner OFF, P1, P2, P3 Invalid = no performance standards of the building auto-mation	OEM / Service		x	x
161	Numero di avarie	Number of faults	Service / Info	x	x	x
162	Ore di esercizio (azzerabile da Service)	Operating hours (resettable by Service)	Service / Info	x	x	x
163	Ore di esercizio (con dispositivo sotto tensione)	Operating hours (when unit is live)	Service / Info	x	x	x
164	Numero di partenze (azzerabile da Service)	Number of startups (resettable by Service)	Service / Info	x	x	x
165	Numero di partenze	Number of startups	Service / Info	x	x	x

166	Numero totale di partenze (non azzerabile)	Total number of startups	Service / Info	x	x	x
167	Volume combustibile (azzerabile da OEM)	Fuel volume (resettable by OEM)	Service / Info	x	x	x
172	Fuel 1(secondo combustibile)Ore di esercizio (azzerabile da Service)	Fuel 1: Operation hours resettable	Service / Info		x	
174	Fuel 1 (secondo combustibile) Numero di partenze (azzerabile da Service)	Fuel 1: Number of startups resettable	Service / Info		x	
175	Fuel 1 (secondo combustibile) Numero di partenze	Fuel 1: Number of startups	Service / Info		x	
177	Fuel 1 (secondo combustibile) Volume combustibile (azzerabile da OEM)	Fuel 1: Fuel volume resettable (m^3, l, ft^3, gal)	Service / Info		x	

Block 200: Burner control

Param.	Descrizione	Description	Password	LMV20 LMV27	LMV26	LMV37
201	Modalità funzionamento bruciatore (rampa combustibile, modulante / multistadio, servo-comandi, ecc.) __= non definito (cancellazione curve) **1** = accensione diretta a gas (G mod) **2** = accensione tramite pilota gas con attacco tra le due elettrovalvole EV1/EV2 del gas (Gp1 mod) **3** = accensione tramite pilota gas con attacco a monte dell'elettrovalvola EV1 del gas (Gp2 mod) **4** = accensione a gasolio - modulante (Lo mod) **5** = accensione a gasolio - bistadio (Lo 2 stage) **6** = accensione a gasolio - tristadio (Lo 3 stage) **7** = accensione diretta a gas - regolazione pneumatica (G mod pneu) **8** = accensione tramite pilota gas con attacco tra le due elettrovalvole EV1/EV2 del gas - regolazione pneumatica (Gp1 mod pneu) **9** = accensione tramite pilota gas con attacco a monte dell'elettrovalvola EV1 del gas - regolazione pneumatica (Gp2 mod pneu)	Burner operating mode (fuel train, modulating / multistage, actuators, etc..) __= undefined (delete curves) **1** = gas direct ignition (G mod) **2** = ignition by gas pilot connected between the two gas solenoid valves EV1/EV2 (Gp1 mod) **3** = ignition by gas pilot connected upstream the gas EV1 (Gp2 mod) **4** = light oil ignition - modulating (Lo mod) **5** = light oil ignition - double stage (Lo 2 stage) **6** = light oil ignition - three stage (Lo 3 stage) **7** = gas direct ignition - pneumatic regulation (G mod pneu) **8** = ignition by gas pilot connected between the two gas solenoid valves EV1/EV2 - pneumatic regulation (Gp1 mod pneu) **9** = ignition by gas pilot connected upstream the gas EV1 - pneumatic regulation (Gp2 mod pneu)	OEM / Service	x	x	x
	10 = olio modulante con accensione tramite pilota (LOGp mod) **11** = olio 2 stadi con accensione tramite pilota (LOGp 2-stage) **12** = olio modulante con 2 valvole combustibile (LOmod 2 valvole) **13** = olio modulante con 2 valvole combustibile e con accensione tramite pilota (LOGp 2 valvole) **14** = gas modulante pneumatico senza servomotori (Gmod pneu)	**10** = LoGp mod **11** = LoGp 2-stage **12** = Lo mod 2 fuel valves **13** = LoGp mod 2 fuel valves **14** = G mod pneu without actuator				

	15 = gas rampa Gp1 modulante pneumatico senza servomotori (Gp1 mod pneu) **16** = gas rampa Gp2 modulante pneumatico senza servomotori (Gp2 mod pneu) **17** = olio LO 2 stadi senza servomotori **18** = olio LO 3 stadi senza servomotori **19** = gas Gmod con solo servomotore gas **20** = gas Gp1 mod con solo servomotore gas **21** = gas Gp2 mod con solo servomotore gas **22** = olio LO mod con solo servomotore olio	**15** = Gp1 mod pneu without actuator **16** = Gp2 mod pneu without actuator **17** = Lo 2-stage without actuator **18** = Lo 3-stage without actuator **19** = G mod gas actuator only **20** = Gp1 mod gas actuator only **21** = Gp2 mod gas actuator only **22** = Lo mod oil actuator only				
208	Stop programma **0** = non attivo **1** = posizione preventilazione (Ph24 - fase 24 del programma) **2** = posizione accensione (Ph36 - fase 36 del programma) **3** = intervallo di tempo 1 (Ph44 - fase 44 del programma) **4** = intervallo di tempo 2 (Ph52 - fase 52 del programma)	Program stop **0** = deactivated **1** = pre-purge position (Ph24 - program phase 24) **2** = ignition position (Ph36 - program phase 36) **3** = interval 1 (Ph44 - program phase 44) **4** = interval 2 (Ph52 - program phase 52)	OEM / Service	x	x	x
210	Allarme impedimento avviamento **0** = non attivo **1** = attivo	Alarm in the event of start prevention **0** = deactivated **1** = activated	OEM / Service	x	x	x
211	Tempo aumento giri ventilatore (valore fabbrica = 2s - range impostazione: 2 - 60 s)	Fan ramp up time (default value = 2s - range: 2 - 60 s)	OEM / Service	x	x	x
212	Tempo massimo raggiungimento bassa fiamma (valore fabbrica = 45 s - range impostazione: 0.2 s - 10 min) Stabilisce il massimo intervallo di tempo durante il quale il bruciatore raggiunge la minima potenza e poi si spegne	Maximum time down to low-fire (default value = 45 s - range: 0.2 s - 10 min) It states the maximum time interval during which the burner drives to the low output and then turns off	OEM / Service		x	
213	Tempo minimo raggiungimento posizione di stand by (valore fabbrica = 2 s - range impostazione: 2 - 60 s)	Min. time home run (default value = 2 s - range: 2 - 60 s)	OEM	x	x	x
214	Tempo massimo inizio partenza	Max. time start release	OEM	x	x	x
215	Limite ripetizioni catena di sicurezza (valore fabbrica = 16 - range impostazione:1 - 16)	Repetition limit safety loop (default value = 16 - range: 1 - 16)	OEM / Service	x	x	x
217	Tempo massimo per rilevazione segnale (valore fabbrica = 30s - range impostazione: 5s - 10 min)	Max. time to detector signal (default value = 30s - range: 5s - 10 min)	OEM	x	x	x

221	Gas: sonda rilevazione fiamma attivo (valore fabbrica = 1)	Gas: active detector flame evaluation (default value = 1) **0** = QRB../QRC.. **1** = ION / QRA..	OEM / Service	x	x	x
222	Gas: Preventilazione (valore fabbrica = 1) **1** = attivo **0** = non attivo ATTENZIONE : In ambito civile la norma EN676 rende obbligatoria la preventilazione. In ambito industriale, vedere i casi in cui la norma EN746-2 prevede la possibilità di non fare la preventilazione. In questi ultimi casi il bruciatore deve essere costruito obbligatoriamente con controllo di tenuta e valvole gas in classe A	Gas: Pre-purging (default value = 1) **1** = active **0** = deactivated WARNING: in the civil field, the prepurge is mandatory according to the standard EN676. In the industrial fiels, check if the pre purge can be avoided according to the stanrds EN746-2 If the prepurge is not performed, the burner must be equipped with two valves and the proving system.	OEM / Service	x	x	x
223	Limite ripetizioni pressostato gas di minima pressione (valore fabbrica = 16 - range impostazione:1 - 16)	Repetition limit pressure switch-min-gas (default value = 16 - range:1 - 16)	OEM / Service	x	x	x
225	Gas: tempo di preventilazione (valore fabbrica = 20s - range impostazione:20s - 60min)	Gas: Prepurge time (default value = 20s - range:20s - 60min)	OEM / Service	x	x	x
226	Gas: tempo di preaccensione (valore fabbrica = 2s - range impostazione:0.2s - 60min)	Gas: Preignition time (default value = 2s - range: 0.2s - 60min)	OEM / Service	x	x	x
227	Gas: tempo di sicurezza 1 (TSA1) (valore fabbrica = 3s - range impostazione:0.2 - 10s)	Gas: Safety time 1 (TSA1) (default value = 3s - range: 0.2 - 10s)	OEM	x	x	x
229	Gas: tempo di risposta a cadute di pressione entro TSA1 e TSA2 (valore fabbrica = 1.8s - range impostazione:0.2s - 9.8s)	Gas: time to respond to pressure faults in TSA1 e TSA2 (default value = 1.8s - range: 0.2s - 9.8s)	OEM	x	x	x
230	Gas: Intervallo 1 (valore fabbrica = 2s - range impostazione:0.2s - 60min)	Gas: Interval 1 (default value = 2s - range: 0.2s - 60min)	OEM / Service	x	x	x
231	Gas: tempo di sicurezza 2 (TSA2) (valore fabbrica = 3s - range impostazione:0.2 - 10s)	Gas: Safety time 2 (TSA2) (default value = 3s - range:0.2 - 10s)	OEM	x	x	x
232	Gas: Intervallo 2 (valore fabbrica = 2s - range impostazione:0.2s - 60min)	Gas: Interval 2 (default value = 2s - range:0.2s - 60min)	OEM / Service	x	x	
233	Gas: Tempo postcombustione (valore fabbrica = 8s - range impostazione:0.2s - 60s)	Gas: postcombustion time (default value = 8s - range:0.2s - 60s)	OEM / Service	x	x	x
234	Gas: Tempo postventilazione (valore fabbrica = 0.2s - range impostazione:0.2s - 180min)	Gas: Postpurge time (default value = 0.2s - range:0.2s - 180min)	OEM / Service	x	x	x

236	Gas: Pressostato gas di minima (default = 1) 0 = inattivo 1 = pressostato gas di minima (a monte valvola V1) 2 = controllo perditavalvole via pressostato (montato tra le valvole V1 e V2)	Gas: Pressure switch-min input 0 = inactive 1 = pressure switch-min (upstream of fuel valve 1 (V1)) 2 = valve proving via pressure switch-min (between fuel valves 1 (V1) and 2 (V2))	OEM / Service	x	x	
237	Gas: Pressostato gas di massima / ingresso-POC 0 = inattivo 1= pressostato gas di massima 2= POC 3 = pressostato controllo perdite	Gas: Pressure switch-max / POC input 0 = inactive 1 = pressure switch-max 2 = POC 3 = pressure switch valve proving			x	x
239	Gas: Forzatura al funzionamento intermittente 0 = disattivato 1 = attivato Attenzione : di default questo parametro è attivo = (1); esso è modificabile solo su LMV37. Dal punto di vista della sicurezza, il funzionamento continuo è valido esclusivamente per bruciatori di gas con elettrodo di rilevazione.	Gas: Forced intermittent operation 0 = deactivated 1 = activated	OEM			x
240	Limite ripetizioni perdita di fiamma (valore fabbrica = 2 - range impostazione:1 - 2)	Repetition limit loss of flame (default value= 2 - range:1 - 2)	OEM	x	x	x
241	Gas: esecuzione controllo tenuta (valore fabbrica = 2) **0** = no controllo tenuta **1** = controllo tenuta in avviamento **2** = controllo tenuta in arresto **3** = controllo tenuta in arresto e in avviamento	Gas: execution proving test (default value= 2) **0** = no proving test **1** = proving test on startup **2** = proving test on shutdown **3** = proving test on shutdown and on startup	OEM / Service	x	x	x
242	Gas: tempo evacuazione controllo tenuta (valore fabbrica = 3s - range impostazione:0.2s - 10s)	Gas: proving test evacuation time (default value = 3s - range:0.2s - 10s)	OEM	x	x	x

243	Gas: tempo pressione atmosferica controllo tenuta (valore fabbrica = 10s - range impostazione:0.2s - 60s)	Gas: proving test time atmospheric pressure (default value = 10s - range:0.2s - 60s)	OEM	x	x	x
244	Gas: tempo riempimento controllo tenuta (valore fabbrica = 3s - range impostazione:0.2s - 10s)	Gas: proving test filling time (default value = 3s - range:0.2s - 10s)	OEM	x	x	x
245	Gas: tempo test pressione gas (valore fabbrica = 10s - range impostazione:0.2s - 60s)	Gas: proving test time gas pressure (default value = 10s - range:0.2s - 60s)	OEM	x	x	x
246	Gas: tempo attesa consenso pressostato di minima (valore fabbrica = 10s - range impostazione:0.2s - 60s) Se la pressione del gas è troppo bassa, in fase 22 non verrà eseguito l'avviamento: il sistema compie un numero impostabile di tentativi finché non si arriva al blocco. Il tempo di attesa tra un tentativo e il successivo viene raddoppiato ad ogni tentativo.	Gas: waiting time gas shortage (default value = 10s - range:0.2s - 60s) If the gas pressure is too low, in phase 22 the startup will not be performed: the system tries for a certain number of times the it locks out. The time interval between two attempts is doubled at each attempt.	OEM	x	x	x
248	Gas: Tempo di post-ventilazione 3 (abortito con regolatore di potenza (LR)-ON	Gas: Postpurge time 3 (abortion with load controller (LR)-ON	OEM / Service	x	x	x
261	Olio: sonda rilevazione fiamma attivo (valore fabbrica = 0) **0** = QRB../QRC.. **1** = ION / QRA..	Oil: active detector flame evaluation (default value = 0) **0** = QRB../QRC.. **1** = ION / QRA..	OEM / Service	x	x	x
262	Olio: preventilazione (valore fabbrica = 1) **1** = attivo **0** = non attivo In ambito civile la norma EN267 rende obbligatoria la preventilazione. In ambito industriale, vedere i casi in cui la norma EN746-2 prevede la possibilità di non fare la preventilazione.	Oil: prepurging (default value = 1) **0** = deactivated **1** = activated **0** = deactivated WARNING: in the civil field, the prepurge is mandatory according to the standard EN267. In the industrial fiels, check if the pre purge can be avoided according to the standard EN746-2	OEM / Service	x	x	x
265	Olio: tempo preventilazione (valore fabbrica = 15s - range impostazione:15s - 60min)	Oil: prepurging time (default value = 15s - range:15s - 60min)	OEM / Service	x	x	x
266	Olio: tempo preaccensione (valore fabbrica = 2s - range impostazione:0.2s - 60min)	Oil: preignition time (default value = 2s - range:0.2s - 60min)	OEM / Service	x	x	x
267	Olio: tempo di sicurezza 1 (TSA1) (valore fabbrica = 5s - range impostazione:0.2 - 15s)	Oil: safety time 1 (TSA1) (default value = 5s - range:0.2 - 15s)	OEM	x	x	x
269	Olio: tempo di risposta a cadute di pressione entro TSA1 e TSA2 (valore fabbrica = 1.8s - range impostazione:0.2s - 14.8s)	Oil: time to respond to pressure faults in TSA1 and TSA2 (default value = 1.8s - range:0.2s - 14.8s)	OEM	x	x	x

270	Olio: Intervallo 1 (valore fabbrica = 2s - range impostazione:0.2s - 60min)	Oil: Interval 1 (default value = 2s - range:0.2s - 60min)	OEM / Service	x	x	x
271	Olio: tempo di sicurezza 2 (TSA2) (valore fabbrica = 3s - range impostazione:0.2 - 10s)	Oil: safety time 2 (TSA2) (default value = 3s - range:0.2 - 10s)	OEM	x	x	x
272	Olio: Intervallo 2 (valore fabbrica = 2s - range impostazione:0.2s - 60min)	Oil: Interval 2 (default value = 2s - range:0.2s - 60min)	OEM / Service	x	x	x
273	Olio: Tempo postcombustione (valore fabbrica = 8s - range impostazione:0.2s - 60s)	Oil: Postcombustion time (default value = 8s - range:0.2s - 60s)	OEM / Service	x	x	x
274	Olio: Tempo postventilazione (valore fabbrica = 0.2s - range impostazione:0.2s - 180min)	Oil: Postpurging time (default value = 0.2s - range:0.2s - 180min)	OEM / Service	x	x	x
276	Olio : Pressostato olio di minima (default = 1) 0 = inattivo 1 = attivo dalla fase 38 2 = attivo dal tempo di sicurezza (TSA)	Oil. Pressure switch-min input 0 = inactive 1 = active from phase 38 2 = active from safety time (TSA)	OEM / Service	x	x	
277	Olio: Pressostato olio di massima / ingresso-POC 0 = inattivo 1= pressostato olio di massima 2= POC	Oil: Pressure switch-max/POC input 0 = inactive 1 = pressure switch-max 2 = POC			x	
279	Olio: Forzatura al funzionamento intermittente 0 = disattivato 1 = attivato Attenzione : di default questo parametro è attivo = (1); esso è modificabile solo su LMV37..	Oil: Forced intermittent operation 0 = deactivated 1 = activated	OEM		x	x
280	Limite ripetizioni perdita di fiamma (valore fabbrica = 2 - range impostazione:1 - 2)	Repetition limit value loss of flame (default value = 2 - range:1 - 2)	OEM	x	x	x
281	Olio: tempo iniezione olio (valore fabbr. = 1) **0** = preaccensione corta (Ph38 - fase programma 38) **1** = preaccensione lunga (con ventilatore) (Ph22 - fase programma 22)	Oil: time oil ignition (default value = 1) **0** = short preignition (Ph38-progr. phase 38) **1** = long preignition (with fan) (Ph22 - program phase 22)	OEM / Service	x	x	x
284	Olio: Tempo di post-ventilazione 3 (abortito con regolatore di potenza (LR)-ON	Oil: Postpurge time 3 (abortion with load controller (LR)-ON	OEM / Service	x	x	x

Block 300: Burner control (only with LMV26)

Param.	Descrizione	Description	Password	LMV20 LMV27	LMV26	LMV37
301	Combustibile 1 : Modalità funzionamento bruciatore (rampa combustibile, modulante / multistadio, servocomandi, ecc.) __= non definito (cancellazione curve) **1** = accensione diretta a gas (G mod) **2** = accensione tramite pilota gas con attacco tra le due elettrovalvole EV1/EV2 del gas (Gp1 mod) **3** = accensione tramite pilota gas con attacco a monte dell'elettrovalvola EV1 del gas (Gp2 mod) **4** = accensione a gasolio - modulante (Lo mod) **5** = accensione a gasolio - bistadio (Lo 2 stage) **6** = accensione a gasolio - tristadio (Lo 3 stage) **7** = accensione diretta a gas - regolazione pneumatica (G mod pneu) **8** = accensione tramite pilota gas con attacco tra le due elettrovalvole EV1/EV2 del gas - regolazione pneumatica (Gp1 mod pneu) **9** = accensione tramite pilota gas con attacco a monte dell'elettrovalvola EV1 del gas - regolazione pneumatica (Gp2 mod pneu) **10** = olio modulante con accensione tramite pilota (LOGp mod)	Fuel 1 : Burner operating mode (fuel train, modulating / multistage, actuators, etc..) __= undefined (delete curves) **1** = gas direct ignition (G mod) **2** = ignition by gas pilot connected between the two gas solenoid valves EV1/EV2 (Gp1 mod) **3** = ignition by gas pilot connected upstream the gas EV1 (Gp2 mod) **4** = light oil ignition - modulating (Lo mod) **5** = light oil ignition - double stage (Lo 2 stage) **6** = light oil ignition - three stage (Lo 3 stage) **7** = gas direct ignition - pneumatic regulation (G mod pneu) **8** = ignition by gas pilot connected between the two gas solenoid valves EV1/EV2 - pneumatic regulation (Gp1 mod pneu) **9** = ignition by gas pilot connected upstream the gas EV1 - pneumatic regulation (Gp2 mod pneu) **10** = LoGp mod	OEM / Service		x	

	11 = olio 2 stadi con accensione tramite pilota (LOGp 2-stage) **12** = olio modulante con 2 valvole combustibile (LOmod 2 valvole) **13** = olio modulante con 2 valvole combustibile e con accensione tramite pilota (LOGp 2 valvole) **14** = gas modulante pneumatico senza servomotori (Gmod pneu) **15** = gas rampa Gp1 modulante pneumatico senza servomotori (Gp1 mod pneu) **16** = gas rampa Gp2 modulante pneumatico senza servomotori (Gp2 mod pneu)	**11** = LoGp 2-stage **12** = Lo mod 2 fuel valves **13** = LoGp mod 2 fuel valves **14** = G mod pneu without actuator **15** = Gp1 mod pneu without actuator **16** = Gp2 mod pneu without actuator				
	17 = olio LO 2 stadi senza servomotori **18** = olio LO 3 stadi senza servomotori **19** = gas Gmod con solo servomotore gas **20** = gas Gp1 mod con solo servomotore gas **21** = gas Gp2 mod con solo servomotore gas **22** = olio LO mod con solo servomotore olio	**17** = Lo 2-stage without actuator **18** = Lo 3-stage without actuator **19** = G mod gas actuator only **20** = Gp1 mod gas actuator only **21** = Gp2 mod gas actuator only **22** = Lo mod oil actuator only			x	
321	Combustibile 1 - Gas: sonda rilevazione fiamma attivo (valore fabbrica = 1) - **0** = QRB../QRC.. **1** = ION / QRA..	Fuel 1 - Gas: active detector flame evaluation (default value = 1) **0** = QRB../QRC.. **1** = ION / QRA..	OEM / Service		x	
322	Combustibile 1 - Gas: Preventilazione (valore fabbrica = 1) **1** = attivo **0** = non attivo ATTENZIONE : In ambito civile la norma EN676 rende obbligatoria la preventilazione. In ambito industriale, vedere i casi in cui la norma EN746-2 prevede la possibilità di non fare la preventilazione. In questi ultimi casi il bruciatore deve essere costruito obbligatoriamente con controllo di tenuta e valvole gas in classe A.	Fuel 1 - Gas: Pre-purging (default value = 1) **1** = active **0** = deactivated WARNING: in the civil field, the prepurge is mandatory according to the standard EN676. In the industrial fiels, check if the pre purge can be avoided according to the stanrds EN746-2 If the prepurge is not performed, the burner must be equipped with two valves and the proving system.	OEM / Service		x	
323	Limite ripetizioni pressostato gas di minima pressione (valore fabbrica = 16 - range impostazione:1 - 16)	Repetition limit pressure switch-min-gas (default value = 16 - range:1 - 16)	OEM / Service		x	
325	Combustibile 1 - Gas: tempo di preventilazione (valore fabbrica = 20s - range impostazione:20s - 60min)	Fuel 1 - Gas: Prepurge time (default value = 20s - range:20s - 60min)	OEM / Service		x	

326	Combustibile 1 - Gas: tempo di preaccensione (valore fabbrica = 2s - range impostazione:0.2s - 60min)	Fuel 1 - Gas: Preignition time (default value = 2s - range: 0.2s - 60min)	OEM / Service		x	
327	Combustibile 1 - Gas: tempo di sicurezza 1 (TSA1) (valore fabbrica = 3s - range impostazione:0.2 - 10s)	Fuel 1 - Gas: Safety time 1 (TSA1) (default value = 3s - range: 0.2 - 10s)	OEM		x	
329	Combustibile 1 - Gas: tempo di risposta a cadute di pressione entro TSA1 e TSA2 (valore fabbrica = 1.8s - range impostazione:0.2s - 9.8s)	Fuel 1 - Gas: time to respond to pressure faults in TSA1 e TSA2 (default value = 1.8s - range: 0.2s - 9.8s)	OEM		x	
330	Combustibile 1 - Gas: Intervallo 1 (valore fabbrica = 2s - range impostazione:0.2s - 60min)	Fuel 1 - Gas: Interval 1 (default value = 2s - range: 0.2s - 60min)	OEM / Service		x	
331	Combustibile 1 - Gas: tempo di sicurezza 2 (TSA2) (valore fabbrica = 3s - range impostazione:0.2 - 10s)	Fuel 1 - Gas: Safety time 2 (TSA2) (default value = 3s - range:0.2 - 10s)	OEM		x	
332	Combustibile 1 - Gas: Intervallo 2 (valore fabbrica = 2s - range impostazione:0.2s - 60min)	Fuel 1 - Gas: Interval 2 (default value = 2s - range:0.2s - 60min)	OEM / Service		x	
333	Combustibile 1 - Gas: Tempo postcombustione (valore fabbrica = 8s - range impostazione:0.2s - 60s)	Fuel 1 - Gas: postcombustion time (default value = 8s - range:0.2s - 60s)	OEM / Service		x	
334	Combustibile 1 - Gas: Tempo postventilazione (valore fabbrica = 0.2s - range impostazione:0.2s - 180min)	Fuel 1 - Gas: Postpurge time (default value = 0.2s - range:0.2s - 180min)	OEM / Service		x	
336	Combustibile 1 - Gas: Pressostato gas di minima (default = 1) 0 = inattivo 1 = pressostato gas di minima (a monte valvola V1) 2 = controllo perditavalvole via pressostato (montato tra le valvole V1 e V2)	Fuel 1 - Gas: Pressure switch-min input 0 = inactive 1 = pressure switch-min (upstream of fuel valve 1 (V1)) 2 = valve proving via pressure switch-min (between fuel valves 1 (V1) and 2 (V2))	OEM / Service		x	
337	Combustibile 1 - Gas: Pressostato gas di massima / ingressoPOC 0 = inattivo 1= pressostato gas di massima 2= POC 3 = pressostato controllo perdite	Fuel 1 - Gas: Pressure switch-max / POC input 0 = inactive 1 = pressure switch-max 2 = POC 3 = pressure switch valve proving			x	

340	Limite ripetizioni perdita di fiamma (valore fabbrica = 2 - range impostazione:1 - 2)	Repetition limit loss of flame (default value= 2 - range:1 - 2)	OEM		x	
341	Combustibile 1 - Gas: esecuzione controllo tenuta (valore fabbrica = 2) **0** = no controllo tenuta **1** = controllo tenuta in avviamento **2** = controllo tenuta in arresto **3** = controllo tenuta in arresto e in avviamento	Fuel 1 - Gas: execution proving test (default value= 2) **0** = no proving test **1** = proving test on startup **2** = proving test on shutdown **3** = proving test on shutdown and on startup	OEM / Service		x	
342	Combustibile 1 - Gas: tempo evacuazione controllo tenuta (valore fabbrica = 3s - range impostazione:0.2s - 10s)	Fuel 1 - Gas: proving test evacuation time (default value = 3s - range:0.2s - 10s)	OEM		x	
343	Combustibile 1 - Gas: tempo pressione atmosferica controllo tenuta (valore fabbrica = 10s - range impostazione:0.2s - 60s)	Fuel 1 - Gas: proving test time atmospheric pressure (default value = 10s - range:0.2s - 60s)	OEM		x	
344	Combustibile 1 - Gas: tempo riempimento controllo tenuta (valore fabbrica = 3s - range impostazione:0.2s - 10s)	Fuel 1 - Gas: proving test filling time (default value = 3s - range:0.2s - 10s)	OEM		x	
345	Combustibile 1 - Gas: tempo test pressione gas (valore fabbrica = 10s - range impostazione:0.2s - 60s)	Fuel 1 - Gas: proving test time gas pressure (default value = 10s - range:0.2s - 60s)	OEM		x	
346	Combustibile 1 - Gas: tempo attesa consenso pressostato di minima (valore fabbrica = 10s - range impostazione:0.2s - 60s) Se la pressione del gas è troppo bassa, in fase 22 non verrà eseguito l'avviamento: il sistema compie un numero impostabile di tentativi finché non si arriva al blocco. Il tempo di attesa tra un tentativo e il successivo viene raddoppiato ad ogni tentativo.	Fuel 1 - Gas: waiting time gas shortage (default value = 10s - range:0.2s - 60s) If the gas pressure is too low, in phase 22 the startup will not be performed: the system tries for a certain number of times the it locks out. The time interval between two attempts is doubled at each attempt.	OEM		x	
348	Combustibile 1 - Gas: Tempo di post-ventilazione 3 (abortito con regolatore di potenza (LR)-ON	Fuel 1 - Gas: Postpurge time 3 (abortion with load controller (LR)-ON	OEM / Service		x	
361	Combustibile 1 - Olio: sonda rilevazione fiamma attivo (valore fabbrica = 0) **0** = QRB../QRC.. **1** = ION / QRA..	Fuel 1 - Oil: active detector flame evaluation (default value = 0) **0** = QRB../QRC.. **1** = ION / QRA..	OEM / Service		x	

362	Combustibile 1 - Olio: preventilazione (valore fabbrica = 1) **1** = attivo **0** = non attivo In ambito civile la norma EN267 rende obbligatoria la preventilazione. In ambito industriale, vedere i casi in cui la norma EN746-2 prevede la possibilità di non fare la preventilazione.	Fuel 1 - Oil: prepurging (default value = 1) **0** = deactivated **1** = activated **0** = deactivated WARNING: in the civil field, the prepurge is mandatory according to the standard EN267. In the industrial fiels, check if the pre purge can be avoided according to the standard EN746-2	OEM / Service		x	
365	Combustibile 1 - Olio: tempo preventilazione (valore fabbrica = 15s - range impostazione:15s - 60min)	Fuel 1 - Oil: prepurging time (default value = 15s - range:15s - 60min)	OEM / Service		x	
366	Combustibile 1 - Olio: tempo preaccensione (valore fabbrica = 2s - range impostazione:0.2s - 60min)	Fuel 1 - Oil: preignition time (default value = 2s - range:0.2s - 60min)	OEM / Service		x	
367	Combustibile 1 - Olio: tempo di sicurezza 1 (TSA1) (valore fabbrica = 5s - range impostazione:0.2 - 15s)	Fuel 1 - Oil: safety time 1 (TSA1) (default value = 5s - range:0.2 - 15s)	OEM		x	
369	Combustibile 1 - Olio: tempo di risposta a cadute di pressione entro TSA1 e TSA2 (valore fabbrica = 1.8s - range impostazione:0.2s - 14.8s)	Fuel 1 - Oil: time to respond to pressure faults in TSA1 and TSA2 (default value = 1.8s - range:0.2s - 14.8s)	OEM		x	
370	Combustibile 1 - Olio: Intervallo 1 (valore fabbrica = 2s - range impostazione:0.2s - 60min)	Fuel 1 - Oil: Interval 1 (default value = 2s - range:0.2s - 60min)	OEM / Service		x	
371	Combustibile 1 - Olio: tempo di sicurezza 2 (TSA2) (valore fabbrica = 3s - range impostazione:0.2 - 10s)	Fuel 1 - Oil: safety time 2 (TSA2) (default value = 3s - range:0.2 - 10s)	OEM		x	
372	Combustibile 1 - Olio: Intervallo 2 (valore fabbrica = 2s - range impostazione:0.2s - 60min)	Fuel 1 - Oil: Interval 2 (default value = 2s - range:0.2s - 60min)	OEM / Service		x	
373	Combustibile 1 - Olio: Tempo postcombustione (valore fabbrica = 8s - range impostazione:0.2s - 60s)	Fuel 1 - Oil: Postcombustion time (default value = 8s - range:0.2s - 60s)	OEM / Service		x	
374	Combustibile 1 - Olio: Tempo postventilazione (valore fabbrica = 0.2s - range impostazione:0.2s - 180min)	Fuel 1 - Oil: Postpurging time (default value = 0.2s - range:0.2s - 180min)	OEM / Service		x	
377	Combustibile 1 - Olio: Pressostato olio di massima / ingressoPOC 0 = inattivo 1= pressostato olio di massima 2= POC	Fuel 1 - Oil: Pressure switch-max/POC input 0 = inactive 1 = pressure switch-max 2 = POC			x	

380	Limite ripetizioni perdita di fiamma (valore fabbrica = 2 - range impostazione:1 - 2)	Repetition limit value loss of flame (default value = 2 - range:1 - 2)	OEM		x	
381	Combustibile 1 - Olio: tempo iniezione olio (valore fabbr. = 1) **0** = preaccensione corta (Ph38 - fase programma 38) **1** = preaccensione lunga (con ventilatore) (Ph22 - fase programma 22)	Fuel 1 - Oil: time oil ignition (default value = 1) **0** = short preignition (Ph38-progr. phase 38) **1** = long preignition (with fan) (Ph22 - program phase 22)	OEM / Service		x	
384	Combustibile 1 - Olio: Tempo di post-ventilazione 3 (abortito con regolatore di potenza (LR)-ON	Fuel 1 - Oil: Postpurge time 3 (abortion with load controller (LR)-ON	OEM / Service		x	

Block 400: Setting air/fuel ratio curves

Param.	Descrizione	Description	Password	LMV20 LMV27	LMV26	LMV37
401	Curve controllo servocomando combustibile (F): si accede alla lista dei punti da impostare (da P0 a P9) - consultare paragrafo “Impostazione curve”	Ratio control curve fuel actuator (F): it accesses to the parameter list of the points to be set (P0 to P9) - see paragrapf “Setting the curves”	OEM / Service	x	x	x
402	Curve controllo servocomando aria (A): si accede alla lista dei punti da impostare (da P0 a P9) - consultare paragrafo “Impostazione curve”	Ratio control curve air actuator (A): it accesses to the parameter list of the points to be set (P0 to P9) - see paragraph “Setting the curves”	OEM / Service	x	x	x
403	Curve controllo inverter (F + A): si accede alla lista dei punti da impostare (da P0 a P9) - consultare paragrafo “Impostazione curve”	Ratio control curves VSD (curve setting only)	SO		x	x
404	Combustibile 1 - Curve controllo servocomando combustibile 1 (F): si accede alla lista dei punti da impostare (da P0 a P9) - consultare paragrafo “Impostazione curve”	Fuel 1: Ratio control curves fuel actuator (curve setting only)	SO		x	
405	Combustibile 1 - Curve controllo servocomando aria (A): si accede alla lista dei punti da impostare (da P0 a P9) - consultare paragrafo “Impostazione curve”	Fuel 1: Ratio control curves air actuator (curve setting only)	SO		x	
406	Combustibile 1 - Curve controllo inverter (F + A): si accede alla lista dei punti da impostare (da P0 a P9) - consultare paragrafo “Impostazione curve”	Fuel 1: Ratio control curves VSD (curve setting only)	SO		x	

Block 500: Air/fuel ratio control

Param.	Descrizione	Description	Password	LMV20 LMV27	LMV26	LMV37
501	Posizione **servocomando combustibile** in assenza di fiamma (no-flame) **Indice 0** = posizione di sosta = 0° **Indice 1** = posizione preventilazione = 0° **Indice 2** = posizione postventilazione = 15°	No-flame position fuel actuator **Index 0** = no-load position = 0° **Index 1** = prepurge position = 0° **Index 2** = postpurge position = 15°	OEM / Service	x	x	x
502	Posizione **servocomando aria** in assenza di fiamma (no-flame) **Indice 0** = posizione di sosta = 0° **Indice 1** = posizione preventilazione = 90° **Indice 2** = posizione postventilazione = 45°	No-flame position air actuator **Index 0** = no-load position = 0° **Index 1** = prepurge position = 90° **Index 2** = postpurge position = 45°	OEM / Service	x	x	x
503	**% giri motore con inverter** 0% = ventilatore fermo, 100% = ventilatore al massimo della velocità **Indice 0** = posizione di sosta = 0% **Indice 1** = posizione preventilazione = 100% **Indice 2** = posizione postventilazione = 50%	No-flame speeds VSD Index 0 = no-load speed = 0% Index 1 = prepurge speed = 100% Index 2 = postpurge speed = 50%	OEM / Service		x	x
504	Combustibile 1 - Posizione **servocomando combustibile** in assenza di fiamma (no-flame) **Indice 0** = posizione di sosta = 0° **Indice 1** = posizione preventilazione = 0° **Indice 2** = posizione postventilazione = 15°	Fuel 1 No-flame position fuel actuator **Index 0** = no-load position = 0° **Index 1** = prepurge position = 0° **Index 2** = postpurge position = 15°	OEM / Service		x	
505	Combustibile 1 - Posizione **servocomando aria** in assenza di fiamma (no-flame) **Indice 0** = posizione di sosta = 0° **Indice 1** = posizione preventilazione = 90° **Indice 2** = posizione postventilazione = 45°	Fuel 1 No-flame position air actuator **Index 0** = no-load position = 0° **Index 1** = prepurge position = 90° **Index 2** = postpurge position = 45°	OEM / Service		x	
506	Combustibile 1 - **% giri motore con inverter** 0% = ventilatore fermo, 100% = ventilatore al massimo della velocità **Indice 0** = posizione di sosta = 0% **Indice 1** = posizione preventilazione = 100% **Indice 2** = posizione postventilazione = 50%	Fuel 1 No-flame speeds VSD Index 0 = no-load speed = 0% Index 1 = prepurge speed = 100% Index 2 = postpurge speed = 50%	OEM / Service		x	
522	Tempo rampa di salita inverter	Ramp up	OEM / Service		x	x
523	Tempo rampa di discesa inverter	Ramp down	OEM / Service		x	x

542	Activation of VSD / PWM fan (PWM = Pulse-Width Modulation) 0=deactived 1=actived	Activation of VSD / PWM fan (PWM = Pulse-Width Modulation)	OEM / Service		x	x

544			Parameter 544				OEM / Service	x	x	x
			Modulation **32s**	Modulation **48s**	Modulation **64s**	Modulation **80s**				
	Actuator	Actuating speed parameter 613	Max. delta between the curve points							
	Actuator (<= 5Nm)	5s / 90°	31°	46°	62°	77°				
	Actuator **SQM33.7**	17s / 90°	**9° (1)**	13°	18°	22°				

(1) in this case the max. position of 90° can't be reached

545	Percentuale minima di carico per modulazione (valore fabbrica = n.d. - range impostazione:20%-100%)	Lower load limit (default value = n.d. - range:20%-100%)	OEM / Service	x	x	x
546	Percentuale massima di carico per modulazione (valore fabbrica = n.d. - range impostazione:20%-100%)	Higher load limite (default value = n.d. - range:20%-100%)	OEM / Service	x	x	x
565	Combustibile 1 - Percentuale minima di carico per modulazione (valore fabbrica = n.d. - range impostazione:20%-100%)	Fuel 1 Lower load limit (default value = n.d. - range:20%-100%)	OEM / Service		x	
566	Combustibile 1 - Percentuale massima di carico per modulazione (valore fabbrica = n.d. - range impostazione:20%-100%)	Fuel 1 Higher load limite (default value = n.d. - range:20%-100%)	OEM / Service		x	

Block 600: Actuators

Param.	Descrizione	Description	Password	LMV20 LMV27	LMV26	LMV37
601	Impostazione punto di riferimento **Indice 0** = combustibile **Indice 1** = aria **0** = chiuso (<0°) **1** = aperto (>90°)	Selection of reference point **Index 0** = fuel **Index 1** = air **0** = closed (<0°) **1** = open (>90°)	OEM	x	x	x
602	Direzione rotazione del servocomando **Indice 0** = combustibile **Indice 1** = aria **0** = antiorario **1** = orario VEDI MESSAGGIO DI “ATTENZIONE” RIPORTATO SOTTO.	Actuator’s direction of rotation **Index 0** = fuel **Index 1** = air **0** = counterclockwise **1** = clockwise SEE “WARNING” MESSAGE QUOTED BELOW.	OEM	x	x	x
606	Limite tolleranza per monitoraggio posizione (0.1°) **Indice 0** = combustibile **Indice 1** = aria	Tolerance limit of position monitoring (0.1°) **Index 0** = fuel **Index 1** = air	OEM / Service	x	x	x
608	Combustibile 1 - Impostazione punto di riferimento **Indice 0** = combustibile **Indice 1** = aria **0** = chiuso (<0°) **1** = aperto (>90°)	Fuel 1 : Selection of reference point **Index 0** = fuel **Index 1** = air **0** = closed (<0°) **1** = open (>90°)	OEM		x	
609	Combustibile 1 - Direzione rotazione del servocomando **Indice 0** = combustibile **Indice 1** = aria **0** = antiorario **1** = orario VEDI MESSAGGIO DI “ATTENZIONE” RIPORTATO SOTTO.	Fuel 1 : Actuator’s direction of rotation **Index 0** = fuel **Index 1** = air **0** = counterclockwise **1** = clockwise SEE “WARNING” MESSAGE QUOTED BELOW.	OEM		x	
610	Combustibile 1 - Limite tolleranza per monitoraggio posizione (0.1°) **Indice 0** = combustibile **Indice 1** = aria	Fuel 1 : Tolerance limit of position monitoring (0.1°) **Index 0** = fuel **Index 1** = air	OEM / Service		x	

611	Tipo di riferimento dei servocomandi index 0 = fuel (default = 0 (riferimento standard) index 1 = air (default = 0 (riferimento standard) 0 = standard 1 = fermo entro il raggio utile 2 = fermi interni (SQN1...) 3 = entrambi	Type of referencing Index 0 = fuel Index 1 = air 0 = standard 1 = stop within usable range 2 = internal stop (SQN1...) 3 = both	OEM	x	x	x
612	Combustibile 1 - Tipo di riferimento del servocomando combustibile 0 = standard 1 = fermo entro il raggio utile 2 = fermi interni (SQN1...) 3 = entrambi	Fuel 1: Type of reference for fuel actuator 0 = standard 1 = range stop in the usable range 2 = internal range stop (SQN1…) 3 = both	OEM		x	
613	Tipo di servocomando **Indice 0** = combustibile **Indice 1** = aria 0 = 5s / 90° (1Nm, 1,2Nm, 3Nm) 1 = 10s / 90° (6Nm) 2 = 17s / 90° (10Nm)	Type of actuator **Index 0** = fuel **Index 1** = air 0 = 5 s / 90° (1Nm, 1,2Nm, 3Nm) 1 = 10 s / 90° (6Nm) 2 = 17 s / 90° (10Nm)	OEM	x	x	x
614	Combustibile 1 :Tipo di servocomando **Indice 0** = combustibile **Indice 1** = aria 0 = 5s / 90° (1Nm, 1,2Nm, 3Nm) 1 = 10s / 90° (6Nm) 2 = 17s / 90° (10Nm)	Fuel 1 : Type of actuator **Index 0** = fuel **Index 1** = air 0 = 5 s / 90° (1Nm, 1,2Nm, 3Nm) 1 = 10 s / 90° (6Nm) 2 = 17 s / 90° (10Nm)	OEM		x	
641	Attivazione procedura di standardizzazione inverter (riferirsi al codice errore 82) 0 = standardizzazione disattivata 1 = standardizzaione attivata	Control of speed standardization of VSD Error diagnostics of negative values (refer to error code 82)0 = no speed standardization 1 = speed standardization active			x	x

645	Configurazione uscita analogica % di carico (valore fabbrica = 0) **0** = DC 0..10 V **1** = DC 2..10 V **2** = DC 0/2..10 V	Configuration of analog output (default value = 0) **0** = DC 0..10 V **1** = DC 2..10 V **2** = DC 0/2..10 V	OEM / Service	**LMV27**	x	x

ATTENTION: as for SQM3x actuators, set the direction according to the acutator function. As far as SQN1x actuators, set **always** the counterclockwise direction, independently from the model chosen for the specific function.

Block 700: Error history

Param.	Descrizione	Description	Password
701	Storico errori: 701 - 725.01.codice	Error history: 701 - 725.01.code	Service / Info
°	Storico errori: 701 - 725.02.codice diagnostico	Error history: 701 - 725.02.diagnostic code	Service / Info
°	Storico errori: 701 - 725.03.classe errore	Error history: 701 - 725.03.error class	Service / Info
°	Storico errori: 701 - 725.04.fase	Error history: 701 - 725.04.phase	Service / Info
°	Storico errori: 701 - 725.05.contatore avvii	Error history: 701 - 725.05.startup counter	Service / Info
725	Storico errori: 701 - 725.06.carico	Error history: 701 - 725.06.load	Service / Info

Block 900: Process data

Param.	Descrizione	Description	Password
903	Potenza attuale (valore fabbrica = 0% - range impostazione = 0-100%) **Indice 0** = combustibile **Indice 1** = aria	Current output (default value = 0% - range = 0-100%) **Index 0** = fuel **Index 1** = air	Service / Info
922	Posizione incrementale servocomandi (valore fabbrica = 0% - range impostazione = -50% - 150%) **Indice 0** = combustibile **Indice 1** = aria	Incremental position of actuators (default value = 0% - range = -50% - 150%) **Index 0** = fuel **Index 1** = air	Service / Info
935	Giri motore assoluti	Absolute speed	OEM / Service
936	Giri motore in fase standardizzazione	Standardized speed	Service / Info
942	Sorgente potenza attiva	Active load source	OEM / Service
945	Solo con **LMV26:** Combustibile attuale 0 = combustibile 0 1 = combustibile 1	Actual fuel 0 = fuel 0 1 = fuel 1	Service / Info
947	Risultato interrogazione contatti (codifica bit)	Result of contact sensing (bit-coded)	Service / Info
950	Stato relè (codifica bit)	Required relay state (bit-coded)	Service / Info
954	Intensità di fiamma (0% ÷ 100%); minima corrente 30% = 4µA; massima corrente100% = 16µA; massima corrente ammissibile = 40µA.	Intensity of flame (range = 0% - 100%) minimum current 30% = 4µA; maximum current100% = 16µA; maximum current possible = 40µA.	Service / Info
961	Stato moduli esterni e display	Status of external modules and display	Service / Info
981	Errore memoria: codice	Error memory: code	Service / Info
982	Errore memoria: codice diagnostica	Error memory: diagnostic code	Service / Info
992	Flag di errore	Error Flags	OEM / Service

Actuators references

An incremental transducer is used to ensure position feedback. Referencing of the actuators must be performed after power-on. In addition, at the end of each shutdown in phase 10, the actuators are referenced to ensure that individual stepping errors, which could lead to shutdown, do not accumulate. If a position error occurs, the system switches to the safety phase (phase 01), enabling the actuators with detected position errors to be referenced. During the following phase 10, the only actuators that are referenced are those that were not referenced before in the safety phase (phase 01). The position of the reference point can be selected depending on the type of burner design, either the CLOSED position (<0°) or the OPEN position (>90°).

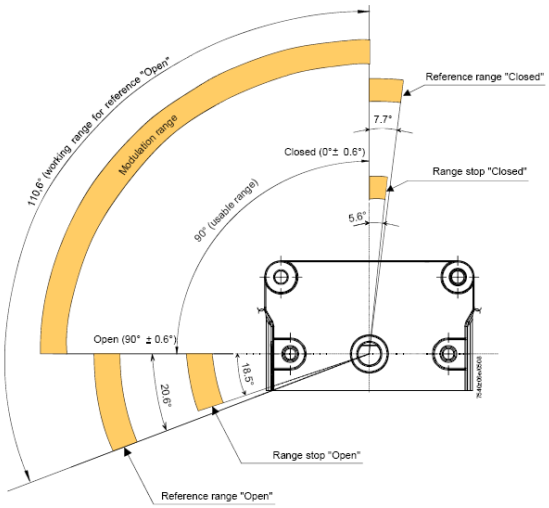

Param.	Descrizione	Description	Password
601	Impostazione punto di riferimento **Indice 0** = combustibile **Indice 1** = aria **0** = chiuso (<0°) **1** = aperto (>90°)	Selection of reference point **Index 0** = fuel **Index 1** = air **0** = closed (<0°) **1** = open (>90°)	OEM

If the acutators position is exchanged (error code: 85), the burner will lockout and will try to adjust for three times, then it will lock out.

Gas proving system

Valve proving is only active when firing on gas. This is a leakage test designed to detect leaking gas valves and, if necessary, to prevent the valves from opening or ignition from being switched on. Lockout is initiated. When performing valve proving, the gas valve on the burner side is opened first to bring the test space to atmospheric pressure. Then, the valve is closed whereupon the pressure in the test space must not exceed a certain level, measured by the gas leakage pressure switch (PGCP). Then, the gas valve on the mains side is opened to fill the gas pipe. When the valve is closed again, the gas pressure must not drop below a certain level. Valve proving can be parameterized to take place on startup, shutdown, or on both phases.

Air-fuel curve points

There are 10 air-fuel curve points: T

P0 = ignition position. Only for ignition; after the ignition, the burner works between Point P1 (low flame) and point P9 (high flame) without going back to P0.

P0 can be set everywhere irrespective of all the other points.

COMMISSIONING THE BURNER

The LMV2x complete programming must be performed on units that has never been set before or reset units (e.g. spare parts).
The programming procedure is performed by setting the following main parameters:

1 if LMV.. is a spare part, insert burner ID (parameter **113**) at least 4 digit.
2 type of fuel train (parameter "**201**")
3 air/fuel ratio curvepoints (Block "**400**")
4 maximum load percentage (parameter "**546**")
5 minimum load percentage (parameter "**545**")

⚠	CAUTION: if an error message as "Loc.." appears when the unit is turned to on for the first time, press ENTER (InFo) until the "Reset" message apperas. After few seconds, the message "OffUpr" will be displayed.

This message shows that the unit has not been programmed before or that the operating mode (fuel train) is not set yet or that the unit has not been completely programmed. Pree keys **F** (Fuel) and **A** (Air) at the same time unitl the display shows **code** and next it will show 7 bars the first on the left is flashing. If the display shows "Off", it means that the unitis already set, then see the instructions on chapter "Adjsuting the burner with LMV2x already programmed").

At the first LMV startup, the AZL display will show

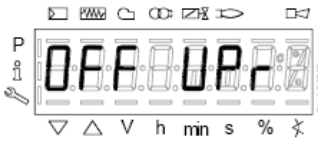

It means that the unit was never set or that no mode was chisen or that some parameters have to be set furthert.
Push F (fuel) and A (Air) together untilthe display shows **code** and then a 7 digit dashed line blinking on the left.

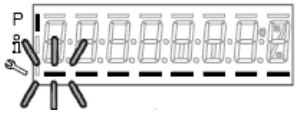

Press the "**+**" key until the first character of the password (the default password is 9876), then press **ENTER (InFo)**, the character now turn to a bar while the second bar starts flashing. Press "**+**" until the second character is entered, then press **ENTER (InFo)**.
Repeat the procedure until the last character si set, then press **ENTER (InFo)**, then **ENTER** again until the message **PArA** appears: then the first parameters block ("**400**") will be shown:

Press **ENTER (InFo)** again, to gain access to programming the operating mode (fuel train):

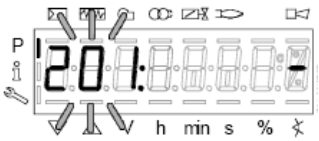

In the example, set configuration **1** = direct gas ignition (G mod).
Other possibilities are below listed:

the types of fuel trains are the following:

Param.	Descrizione	Description	Password
201	Modalità funzionamento bruciatore (rampa comb., mod. / multistadio, servocom., ecc.) __= non definito (cancellazione curve)___= **1** = accensione diretta a gas (G mod) **2** = accensione tramite pilota gas con attacco tra le due elettrovalvole EV1/EV2 gas (Gp1 mod) **3** = accens. tramite pilota gas con attacco a monte dell'elettrov. EV1 del gas (Gp2 mod) **4** = accensione a gasolio - modul. (Lo mod) **5** = accens. a gasolio - bistadio (Lo 2 stage) **6** = accens. a gasolio - tristadio (Lo 3 stage)	Burner operating mode (fuel train, mod / multi-stage, actuators, etc.) __= undefined (delete curves) **1** = gas direct ignition(G mod) **2** = gas pilot ignition with connection between the two gas solenodi valves EV1/EV2 (Gp1 mod) **3** = gas pilot ignition with connection upstrem the gas solenoid valve EV1 (Gp2 mod) **4** = Light Oil - modulating (Lo mod) **5** = Light Oil - 2stages (Lo 2 stage) **6** = Light Oil - 3stages (Lo 3 stage)	OEM / Service

G mod

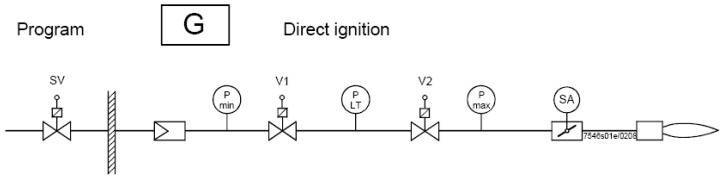

Gp1 mod

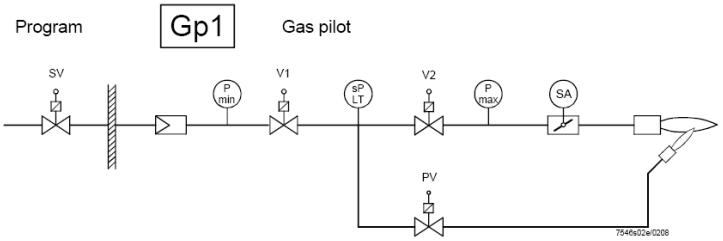

Gp2 mod

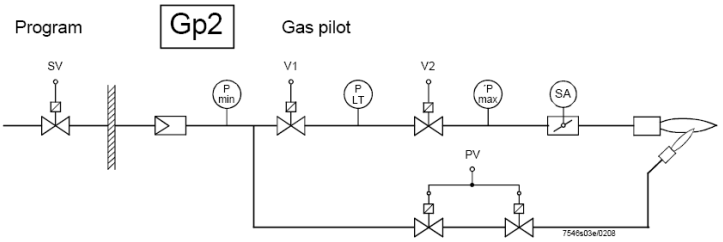

Lo mod

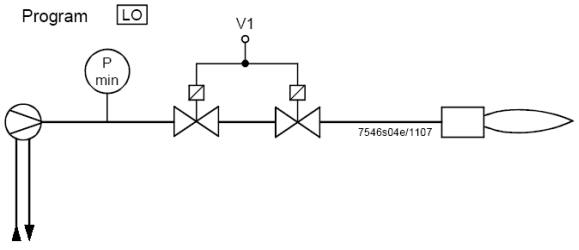

Lo 2-stage

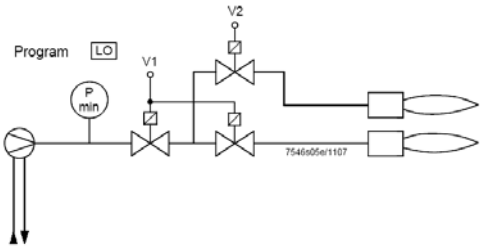

Lo 3-stage

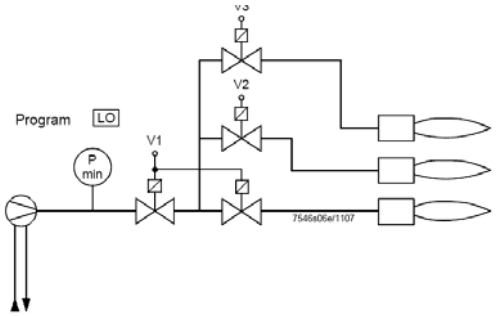

In the example the Gmod gas train has been set (Configuration “1”).

Choose the fuel train by pressing ENTER, then press “**+**” / “**-**”. Press ENTER to confirm: number “1” will appear on the right side of the display.

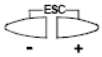

Then press ESC

to quit. The following display is:

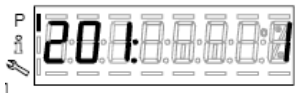

Press “**+**” to show the first point to be set P0.

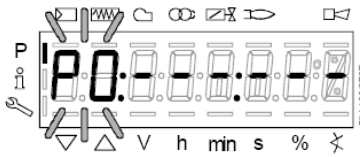

Press **F** and **“+”** to increase the opening angle of the fuel actuator “**0F”** until the requested value is reached (for example 12°÷15°, see below) for the ignition point; or press **F** and **“-”** to decrease the angle:

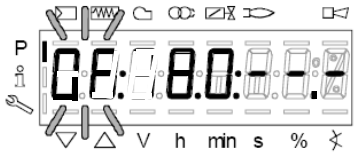

To set the air damper opening angle “0A” in the ignition point (10° for example - see below), press “A” and “+” “A” and “-” at the same time:

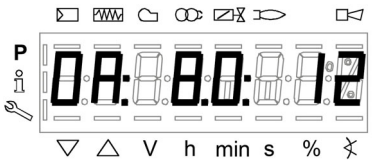

LMV37:

Now the air and fuel quantities are set at the ignition point P0:

By pressing “+”, point P9 can be programmed to set the air and fuel values at the maximum output

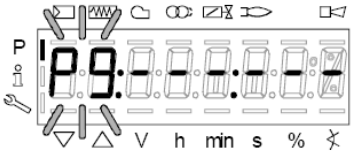

go on as described above to the the opening angles of the air actuator (A) and fuel actuator (F):

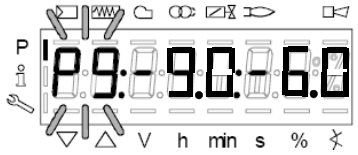

⚠	**CAUTION:** at the first burner adjustment, it is recommended to set the maximum output P9 at the same value (or little higher) of the ignition point, in order to safely reach point P9 next (see next paragraph).

By pressing “+” the display will show:

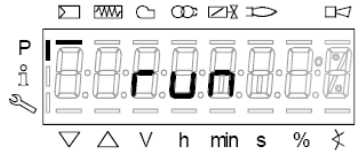

The burner is ready to startup. Now it is possible to re-set the curve points while the burner is operating (“warm setting”) by pressing the ENTER (InFo) or while the burner is in stand-by mode (“cold setting”) by pressing ENTER .

Warm setting

1 Once pressed button **"enter"** and the chain thermostats open (X5-03 terminals), the LMV.. show Ph12.Then close the chain termostat and the unit performs the prepurge cycle (see "Phases List") and stops at the ignition point P0 without ignition anyway.

2 By pressing "+", the burners lights abd the air/fuel ratio can be properly set in presence of flame.

3 By pressing "+" again, the next point P1 is shown (eqaul to P0 as the unit automatically set P0=P1);

4 By pressing "+" again, the "Calc" message will be displayed: the unit is processing the sir/fuel ratio curvepoints until point P9, previuosly set. Once the processing is perfomed the calculated point P2 is shown.By pressing "+" again, the "Calc" message will be displayed: the unit is processing the sir/fuel ratio curvepoints until point P9, previuosly set. Once the processing is perfomed the calculated point P2 is shown.

5 By pressing "+", it is possible to go through the processed curve until point P9 is reached.

Note: if the point doesn't blink, servomotors are still running.

6 n order to set P9 with the gas flow rate according to the generator needs, follow this procedure:

Note: the purpose is to fully open the gas throttle and later on to adjust the gas flow rate through the gas pressure governor.

- Operate smoothly opening by just a few degrees the air damper and later on increasing the gas throttle opening it by a few degrees. Keep monitoring the flue through the flue analyser. Keep the air excess inside normal figures (from 3% to 7% residual O2) operating by means for the air damper servomotor;
- Keep increasing the air damper opening and then the gas throttle, as done in the sequence above, remebering to get the full firing rate wih the gas throttle fully open (or the oil pressure regulator at its maximum pressure position).

See example below:

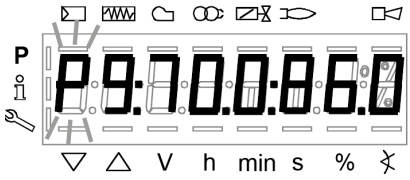

- If, while opening the gas throttle, the gas flow rate was too high, reduce it only through the gas governor and keep opening the throttle until the 60÷70° position is got.
- If the gas train is equipped with a governor and a valve with an adjustable gas flow rate, fully open also this last valve, smoothly! The gas flow rate is always set by means of the governor.

7 As soon as all the devices are fully open, set the gas flow rate through the governor.

8 Set the air damper position in order to get the reccomended air excess (3÷4.8% O2 on gas and 2.9÷4.9 % on oil).

Note1: on high flame, if the gas flow rate is changed by means of the governor, all the other points below high flame must be checked again.

9 After having set the high flame point P9, keep "-" pressed for some seconds unitl "Calc" is displayed in order to have the LMV recalculating all the points:

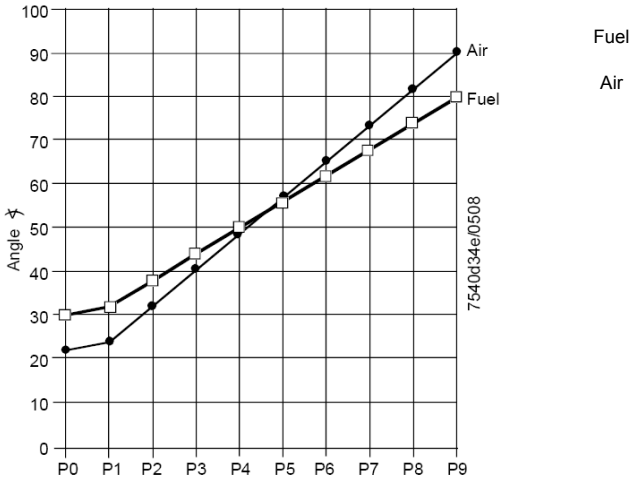

10 the unit will automatically reach point P8 processed: check the combustion values in this point and, if necessary, change it.

11 Press "-" to go down to the lower points and check the combustion values, change the points if necessary.

Note: if in an intermediate point (for example P5), the change of the actuators position is important according to the processed point

P5, keep pressing “-” unitl “Calc” is displayed. The curve will be processed again downwards point P1.

deviation between two following points: 25°max.

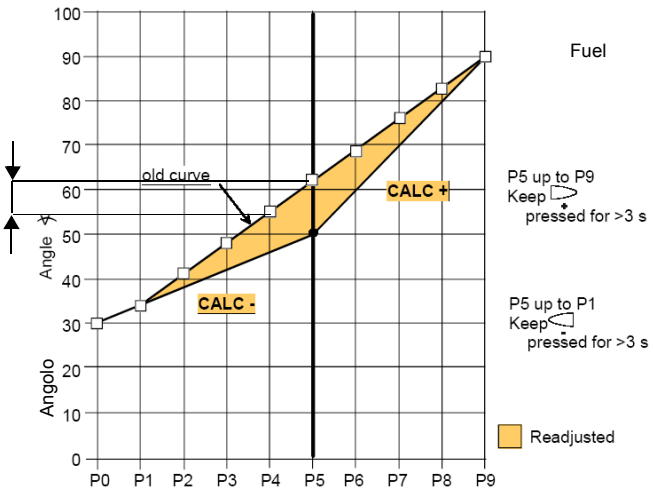

12 press “-” to go through the lower points and check the combustion values, if necessary change the points as described above.

13 By pressing ESC, at the end of the points adjusments, the parameter “**546”** (setting the maximum load) will be displayed; press ENTER (InFo), then “+” until 100%, then press ENTER (InFo) again, ESC and then “+”.

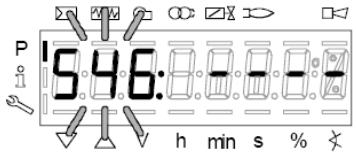

14 The parameter “**545”** (setting the minimum load) is displayed: press ENTER (InFo), then “+” until 20%. Press ENTER, then press ESC for three times. The message “oP” will be displayed as well as the load percentage at the burner is working on.

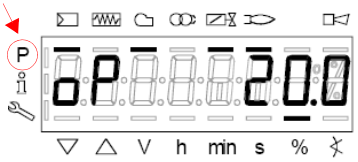

he hyphen related to the symbol “P” (highlited in the picture) will be off to show that the unit exited the programmig mode. The burner will then work automatically, following the curve set.

.**Note1:** if the curvepoints settings is quit before end (by pressing ESC or for a faulty shutdown), the message “OFF UPr” (Start prevention) will be diplayed until all the curvepoints will be set.

Note2: if the gas flow rate at high flame point (maximum load) is changed by means of the pressure stabiliser, all the curvepoints must be checked by going through the curve downwards and resetting them if necessary.

Note3: if the point does not flash, it means thet the actuators have not reached the set position yet.

Note4: if an error occurs causing a safety shutdwon during the processing of the curve, the processing itself will be interrupted.

Cold setting

The ”cold setting“ (without flame) can be performed only when all the curve points values are known (for instance, in case of replacement).

⚠	**When the burner is off, if you modify one curve set point, when the burner restarts the AZL2x shows OFF UPr (OFF UPr0 or OFF UPr1 for LMV26). The LMV.. then, requires a new "warm" startup (see procedure paragraph "Warm Setting”) by checking again all points of curve from P0 to P9.**

BURNER STARTUP WITH LMV2x ALREADY PROGRAMMED

Once the LMV turns on, the AZL display will show

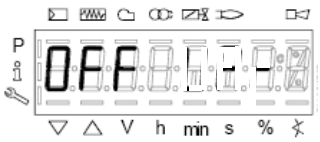

The burners is basically factory set. The air/fuel ratio curve is set with the maximum output point P9 a little higher or equal to P0. To adjust the burner on the plant site, adjust the maximum output point to the flow rate values really requested. Then go through the curve-points, by pressing "+" several times to reach point P9: then adjust the air actuator position (for the air damper) and the fuel acttuator (for the butterfly valve, in case of gas or the oil pressure governor incase of oil), by adjusting the fuel flow rate by means of the gas pressure stabiliser (for gas) or the oil pressure governor (for oil), checking the combustion valeus contemporarly. Once the burner is adjusted at the maximum output, press "-" for more than 5 seconds to process the curve downwards. The curve is then a straight line: go on checking the combustion values point by point; change them if necessary and in case linearise the curve again.

Before starting the burner up, press **F** and **A** at the same time

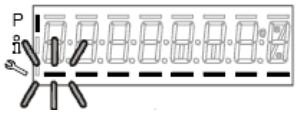

enter the password following the procedure on chapter "Programming LMV2x".

Press ENTER until the display will show:

Press ENTER again: it will show

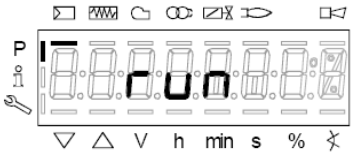

press ENTER (InFo) : the display will show phase 12.

Ph12: *Standby* phase (stationary)

Ph12: *Standby* phase (stationary)

By closing the thermostatic series, the burner startup cycle will take place:

Ph22: *Fan ramp up* phase (fan motor = ON, safety shutoff valve = ON)

Ph24: *Traveling to prepurge position* phase

Ph30: *Prepurge* phase

Ph36: *Traveling to ignition position* phase

Ph38: *Preignition* phase

Ph40: *1st safety time* phase (ignition transformer ON)

Ph42: *1st safety time* phase (ignition transformer OFF), preignition time OFF

Ph44: *Interval1*

The startup sequence stops at phase 44.

The burners is lit and is in"P1" position (low flame point):

Set the air/fuel ratio curvepoints as described on chapter “Programming the LMV2x”

Note: the other phases are
Ph60 = operation (OP= in modulation)
Ph62 = travelling to shutdown
Ph70 = off but in prepurge after the burntime
Ph72 = travelling to postpurging
Ph74 = postpurge (countdown is displayed)

Press ESC the parameter “**546**” (Setting the maximum load) is displayed

Then press to exit the programming mode.
The display will show:

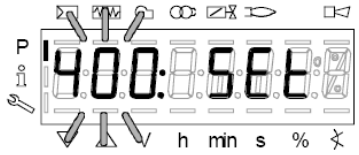

Press for a second time: the display will show the load percentage the burner is working at.

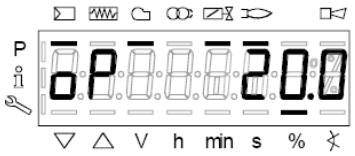

When the generator reaches the programmed set-point, the burner will be in stand-by: the display will show

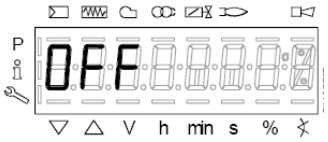

Reset / manual lockout

The system can be manually locked by simultaneously pressing the **ENTER (InFo)** button and **any other button** on the AZL2.... This function allows the user to stop the system from the operating level should an emergency occur. When making a reset, the following actions are carried out:

- Alarm relay and the fault display are off
- the lockout position is cancelled
- the unit performs a reset, then it switches to stand-by

If the unit is in the lockout position, a reset can be made by pressing the **InFo** button for 1…3 seconds. The function is available only when the unit is in the lockout position. Longer or shorter pushes on the button do not produce a reset so that the system maintains the lockout position.

Codice errore / Error code	Codice diagnostico / Diagnostic code	Descrizione / Meaning
167	2	/ Manual lockout via AZL2…

Timeout for menu operation

The time for automatically leaving the parameter setting level can be adjusted between 10 and 120 minutes, using the parameter 127 (Timeout for menu operation). If, during that period of time, there is no operation via the AZL2..., the parameter setting level is quit and the password level reset to *Info / Service*.

Caution! In addition, this timeout or interruption of communication between the LMV2.. and the AZL2... during the time the curves are set leads to lockout!

Codice erroreC Error code	Codice diagnostico Diagnostic code	DescrizioneMeaning
167	8	Manual locking

Entering the Parameter levels

By means of a proper use of the keys, it is possible to enter the various level parameters, as shown in the following flow chart:

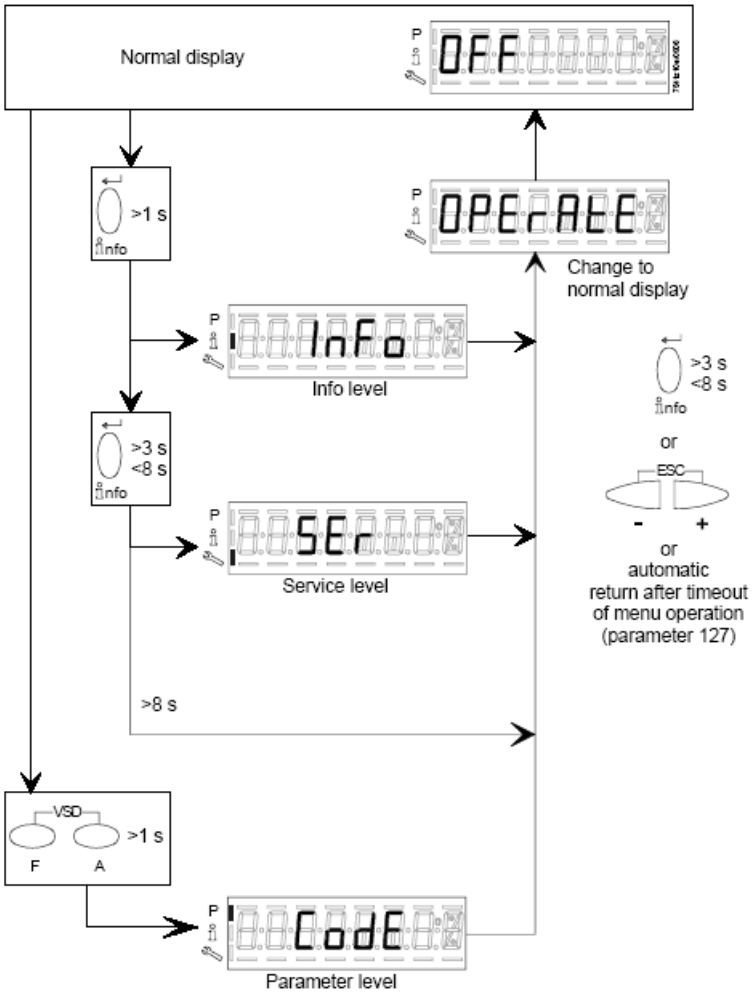

The burner and consequently the LMV2x.. are factory set; the air and fuel curves as set as well.

Info level

To enter the **Info** level, proceed as follows:

1 in any menu position, press keys **+** and **-** at the same time, then the program will start again: the display will show **OFF**.

2 , until the display will show **InFo**, Press the **enter (InFo)** key

3 then il will show the first code (167) flashing, on the right side it will show the data entered. By pressing **+** or **-** it is possible to scroll (up or down) the parameter list.

4 If a dot-line is shown on the right, there is no enough room for complete visualisation: press **enter** again the data will be completely shown for 1 to 3 seconds. By pressing **enter** or **+** and**-** at the same time, the system will exit the parameter visualisation and go back to the flashing number.The **Info** level shows some basic parameters as:

Parameter	***Description***
167	Cubic meters of fule (resettable)
162	Operating hours (resettable)
163	Device operating hours
164	Burners start-ups (resettable)
166	Total number of start-ups
113	Burner number (i.e. serial number)
107	Software version
102	Software date
103	Device serial number
104	Customer code
105	Version
143	Free

5 Example: choose parameter 102 to show the date

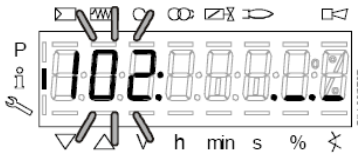

the display shows parameter **102** flashing on the left and characters **._._** on the right.

6 press InFo for 1-3 seconds: the date will appear

7 press InFo to go back to parameter “102”

8 by pressing + / -, it is possible to scroll up/down the parameter list (see table above), or, by pressing ESC or InFo for more seconds, the display will show

9 Once the last parameter is accessed (143) by pressing **+** , the **End** message will flash.

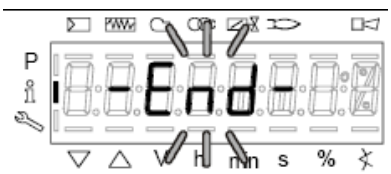

10 Press **InFo** for more than three seconds or for more than three seconds orto return to the normal display.

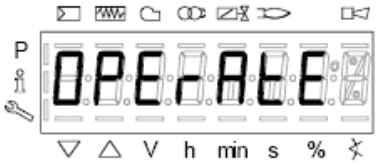

If a message like the one below is shown during operation,

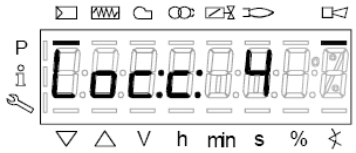

it means that the burner is locked out and the Errore code is shown (in the example “error code:4”); this message is alternating with another message

Diagnostic code (in the example “diagnostic code:3”). Record the codes and find out the fault in the Error table

To perform the reset, press InFo for one second:

The unit displays an event which does not lead to shutdown.

The display shows current error code **c:** alternating with diagnostic code **d**:

.

Press **InFo** to return to the display of phases.

Example: Error code **111** / diagnostic code 0

To reset, press InFo for a second. Record the codes and check the Error List to find the type of faults.

Service level

To enter the Service mode, press InFo until the display will show:

The service level shows all the information about flame intensity, actuators position, number and lock codes:

Parameter	***Description***
954	Flame intensity
121	% output, if set = automatic operation
922	Actuators position, 00=combustibile; 01= aria
161	Lock-outs number
701..725	Lock-outs History (see chapter 23 in the LMV2x manual)

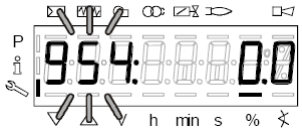

1 the first parameter will be “954”: the percentage of flame is shown on the right. By pressinf + or - it is possible to scroll up/down the parameter list.

2 Once the last parameter is accessed (143) by pressing **+** , the **End** message will blink.

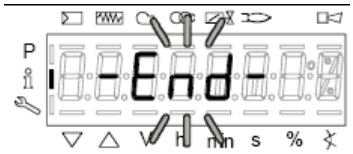

3 Press **InFo** for more than three seconds or for more than three seconds orto return to the normal display.

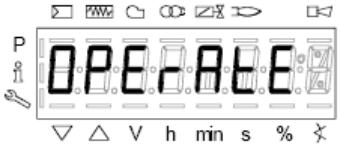

PHASES LIST

Fase /Phase	Funzione	Function
Ph00	Fase blocco	Lockout phase
Ph01	Fase di sicurezza	Safety phase
Ph10	t10 = tempo raggiungimento posizione riposo	t10 = home run
Ph12	Pausa	Standby (stationary)
Ph22	t22 = tempo di salita ventilatore (motore ventilatore = ON, valvola intercettazione di sicurezza = ON)	t22 = fan ramp up time (fan motor = ON, safety shutoff valve = ON)
Ph24	Verso posizione preventilazione	Traveling to the prepurge position
Ph30	t1 = tempo preventilazione	t1 = prepurge time
Ph36	Verso posizione accensione	Traveling to the ignition position
Ph38	t3 = tempo preaccensione	t3 = preignition time
Ph40	TSA1 = primo tempo sicurezza (trasformatore accensione ON)	TSA1= 1st safety time (ignition transformer ON)
Ph42	TSA1 = primo tempo sicurezza (trasformatore accensione OFF)	TSA1 = 1st safety time (ignition transformer OFF), t42 = preignition time OFF
Ph44	t44 = intervallo 1	t44 = interval 1
Ph50	TSA2 = secondo tempo sicurezza	TSA2 = 2nd safety time
Ph52	t52 = intervallo 2	t52 = interval 2
Ph60	Funzionamento 1 (stazionario)	Operation 1 (stationary)
Ph62	t62 = massimo tempo bassa fiamma (funzionamento 2, in preparazione per spegnimento, verso bassa fiamma)	t62 = max. time low-fire (operation 2, preparing for shutdown, traveling to low-fire)
Ph70	t13 = tempo postcombustione	t13 = afterburn time
Ph72	Verso posizione postcombustione	Traveling to the postpurge position
Ph74	t8 = tempo postventilazione	t8 = postpurge time
Ph80	t80 = tempo evacuazione controllo tenuta valvole	t80 = valve proving test evacuation time
Ph81	t81 = tempo perdita pressione atmosferica, prova atmosferica	t81 = leakage time test time atmospheric pressure, atmospheric test
Ph82	t82 = test perdita, test riempimento	t82 = leakage test filling test, filling
Ph83	t83 = tempo perdita pressione gas, test pressione	t83 = leakage test time gas pressure, pressure test
Ph90	Tempo attesa “mancanza gas”	Gas shortage waiting time

BACKUP PARAMETER WITH AZL2x

On the AZL2x you can save the configuration to download on another appliance LMV.

To do this:

access up, press **F** and **A** at the same time

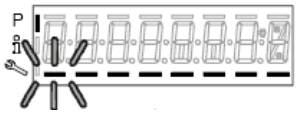

enter the password following the procedure on chapter “Programming LMV2x”.

Press ENTER until the display will show:

with the button go to the group **000** of the parameters and press 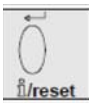

;with the buttons **+** and **-** go to **050** parameter

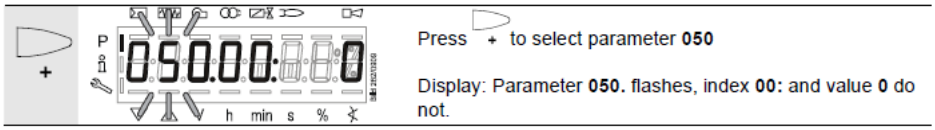

press

the disply show

press again

with the button **+** select **1** and start the backup process by pressing

.

After about 5 seconds the backup process ends and the display shows 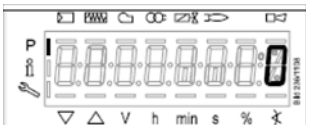

.

⚠	**It is recommended that you perform a backup procedure whenever you change the parameters of the LMV for having a copy in AZL2x!**

RESTORE PARAMETER FROM AZL2x TO LMV..

To copy the previously saved configuration on AZL2x proceed as follows:
access up, press **F** and **A** at the same time

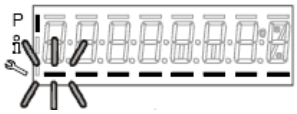

enter the password following the procedure on chapter “Programming LMV2x”.
Press ENTER until the display will show:

⚠	**To copy the configuration from AZL2x to LMV. It is important that the type of LMV is the same (for example LMV20 with LMV20, etc.) and that 113 "Burner ID" of the burner is the same value that is saved in the configuration you want to copy.**

With the buttons 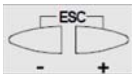

go to the group **100** of the parameters, press на 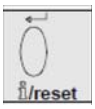

and always with the buttons **+** and **-** go to **113** parameter "Burner ID", press

and verify (and/or change with buttons by pressing enter to confirm)

iWith the buttons 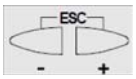

go to the group **000** of the parameters, press

end select the **050** parameter

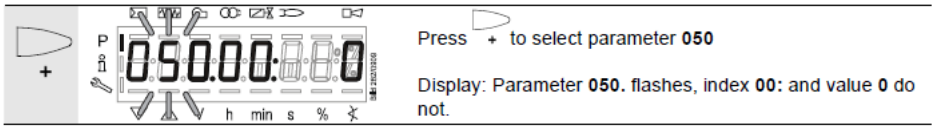

press

the disply show

with the button 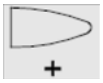

the display shows

press again

with the button **+** select **1** and start the restore process by pressing

.

After about 5 seconds the restore process ends and the display shows 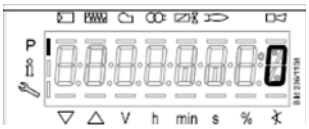

.
Now, LMV has the same configuration that was stored on AZL2x.

ERROR CODE TABLE

Error code	Diagnostic code	Meaning for the LMV2x/3x... system	Remedy
no Comm		**No communication between LMV26... basic unit and AZL2...**	Check wiring for line interruption/loose contact
2	**#**	**No flame at the end of safety time (TSA)**	
	1	*No flame at the end of safety time 1 (TSA1)*	
	2	*No flame at the end of safety time 2 (TSA2)*	
3	**#**	Air pressure failure	
	0	*Air pressure off*	
	1	*Air pressure on*	
	4	*Air pressure on – prevention of startup*	
	20	*Air pressure, combustion pressure – start prevention*	
	68	*Air pressure, POC – start prevention*	
	84	*Air pressure, combustion pressure, POC – start prevention*	
4	**#**	**Extraneous light**	
	0	*Extraneous light during startup*	
	1	*Extraneous light during shutdown*	
	2	*Extraneous light during startup – prevention of startup*	
	6	*Extraneous light during startup, air pressure – start prevention*	
	18	*Extraneous light during startup, combustion pressure – start prevention*	
	24	*Extraneous light during startup, air pressure, combustion pressure – start prevention*	
	66	*Extraneous light during startup, POC – start prevention*	
	70	*Extraneous light during startup, air pressure, POC – start prevention*	
	82	*Extraneous light during startup, combustion pressure, POC – start prevention*	
	86	*Extraneous light during startup, air pressure, combustion pressure, POC – start prevention*	
7	**#**	**Loss of flame**	
	0	*Loss of flame*	
	3...255	*Loss of flame due to TÜV test (loss-of-flame test)*	Diagnostics corresponds to the period of time from shutdown of fuel valves to the detection of loss of flame (resolution 0.2 s → Value 5 = 1 s)

Error code	Diagnostic code	Meaning for the LMV20... system	Remedy
12	**#**	**Valve proving**	
	0	*Fuel valve 1 (V1) leaking* *(fuel valve 2 with valve proving via X5-01)*	With valve proving via X5-01 (gas pressure switch-min) - Check if valve on the burner side is leaking - Check if pressure switch for valve proving is closed, if gas pressure exist - Check wiring for short-circuit
	1	*Fuel valve 2 (V2) leaking* *(fuel valve 1 with valve proving via X5-01)*	With valve proving via X5-01 (gas pressure switch-min) - Check if valve on the gas side is leaking - Check wiring for short-circuit
	2	*Valve proving not possible*	Valve proving activated, but pressure switch-min selected as input function for X9-04 (check parameters 238 and 241)
	3	*Valve proving not possible*	Valve proving activated, but no input assigned (check parameters 236 and 237)
	4	*Valve proving not possible*	Valve proving activated, but 2 inputs assigned (set parameter 237 to pressure switch-max or POC)
	5	*Valve proving not possible*	Valve proving activated, but 2 inputs assigned (check parameters 236 and 237)
	81	*V1 leaking*	Check to see if the valve on the gas side is leaking Check wiring to see if there is an open-circuit
	83	*V2 leaking*	Check to see if the valve on the burner side is leaking Check to see if the pressure switch for the leakage test is closed when gas pressure is present Check wiring for short-circuit
14	**#**	**POC**	
	0	*POC open*	Check to see if the valve's closing contact is closed
	1	*POC close*	Check wiring Check to see if the valve's closing contact opens when valve is controlled
	64	*POC open - start prevention*	Check wiring to see if there is a line interruption. Check to see if the valve's closing contact is closed
19	*80*	*Combustion pressure, POC – start prevention*	Check to see if pressure switch has closed with no combustion pressure present Check wiring for short-circuit
20	**#**	**Pressure switch-min (Pmin)**	
	0	*No minimum gas /oil pressure*	Check wiring for open-circuit
	1	*Gas shortage – start prevention*	Check wiring for open-circuit
21	**#**	**Pressure switch-max / POC**	
	0	*Pressure switch-max: Max. gas / oil pressure exceeded* *POC: POC open (software version ≤ V02.00)*	Check wiring to see if there is a line interruption. POC: Check to see if the valve's closing contact is closed.

Error code	Diagnostic code	Meaning for the LMV2x/3x... system	Remedy
22 OFF S	**#**	**Safety loop / burner flange**	
	0	*Safety loop / burner flange open*	
	1	*Safety loop / burner flange open - prevention of startup*	
	3	*Safety loop/burner flange, extraneous light – start prevention*	
	5	*Safety loop/burner flange, air pressure – start prevention*	
	17	*Safety loop/burner flange, combustion pressure – start prevention*	
	19	*Safety loop/burner flange, extraneous light, combustion pressure – start prevention*	
	21	*Safety loop/burner flange, air pressure, combustion pressure – start prevention*	
	23	*Safety loop/burner flange, extraneous light, air pressure, combustion pressure – start prevention*	
	65	*Safety loop/burner flange, POC – start prevention*	
	67	*Safety loop/burner flange, extraneous light, POC – start prevention*	
	69	*Safety loop/burner flange, air pressure, POC – start prevention*	
	71	*Safety loop/burner flange, extraneous light, air pressure, POC – start prevention*	
	81	*Safety loop/burner flange, combustion pressure, POC – start prevention*	
	83	*Safety loop/burner flange, extraneous light, combustion pressure, POC – start prevention*	
	85	*Safety loop/burner flange, air pressure, combustion pressure, POC – start prevention*	
	87	*Safety loop/burner flange, extraneous light, air pressure, combustion pressure, POC – start prevention*	
50	**#**	**Internal error**	Make a reset; if error occurs repeatedly, replace the unit
51	**#**	**Internal error**	Make a reset; if error occurs repeatedly, replace the unit
55	**#**	**Internal error**	Make a reset; if error occurs repeatedly, replace the unit
56	**#**	**Internal error**	Make a reset; if error occurs repeatedly, replace the unit
57	**#**	**Internal error**	Make a reset; if error occurs repeatedly, replace the unit

Error code	Diagnostic code	Meaning for the LMV2x/3x... system	Remedy
58	**#**	**Internal error**	Make a reset; if error occurs repeatedly, replace the unit
61 Fuel Chg	**#**	**Fuel changeover**	
Fuel Chg	*0*	*Fuel 0*	No error - change to Fuel 0
Fuel Chg	*1*	*Fuel 1*	No error - change to Fuel 1
62 Fuel Err	**#**	**Invalid fuel signals / fuel information**	
Fuel Err	*0*	*Invalid fuel selection (Fuel 0 + 1 = 0)*	Check wiring to see if there is an open-circuit Note Curves cannot be set.
Fuel Err	*1*	*Different fuel selection between the µCs*	Make a reset; if error occurs repeatedly, replace the unit
Fuel Err	*2*	*Different fuel signals between the µCs*	Make a reset; if error occurs repeatedly, replace the unit
Fuel Err	*3*	*Invalid fuel selection (Fuel 0 + 1 = 1)*	Check wiring for short-circuit Note Curves cannot be set. LMV26...: Optional press reset button >3 seconds.
65	**#**	**Internal error**	Make a reset; if error occurs repeatedly, replace the unit
66	**#**	**Internal error**	Make a reset; if error occurs repeatedly, replace the unit
67	**#**	**Internal error**	Make a reset; if error occurs repeatedly, replace the unit
70	**#**	**Internal error fuel-air ratio control: Position calculation modulating**	
	23	*Output invalid*	No valid output
	26	*Curvepoints undefined*	Adjust the curvepoints for all actuators
71	**#**	**Special position undefined**	
	0	*Home position*	Parameterize the home position for all actuators used
	1	*Prepurge position*	Parameterize the prepurge position for all actuators used
	2	*Postpurge position*	Parameterize the postpurge position for all actuators used
	3	*Ignition position*	Parameterize the ignition position for all actuators used
72	**#**	**Internal error fuel-air ratio control**	Make a reset; if error occurs repeatedly, replace the unit
73	**#**	**Internal error fuel-air ratio control: Position calculation multistep**	
	23	*Output invalid*	No valid output
	26	*Curvepoints undefined*	Adjust the curvepoints for all actuators

Error code	Diagnostic code	Meaning for the LMV2x/3x... system	Remedy
75	**#**	**Internal error fuel-air ratio control: Data clocking check**	
	1	*Current output different*	
	2	*Target output different*	
	4	*Target positions different*	
	16	*Different positions reached*	Can be caused by different standardized speeds (e.g. after restore of data set) when the VSD is activated → standardize again and check adjustment of the fuel-air ratio control system
76	**#**	**Internal error fuel-air ratio control**	Make a reset; if error occurs repeatedly, replace the unit
80	**#**	**Control range limitation of VSD**	Basic unit could not correct the difference in speed and reached a control range limit. 1. Basic unit is not standardized for this motor → repeat standardization. **Caution!** **Settings of fuel-air ratio control must be checked.** 2. Ramp time settings of the VSD are not shorter than those of the basic unit (parameters 522, 523). 3. Characteristic of the VSD is not linear. Configuration of the voltage input at the VSD must accord with that of the basic unit (parameter 645). 4. VSD does not follow quickly enough the changes of the basic unit. Check settings of the VSD (input filter, slippage compensation, hiding different speeds)
	1	*Control range limitation at the bottom*	VSD speed was too high
	2	*Control range limitation at the top*	VSD speed was too low
81	*1*	*Interrupt limitation speed input*	Too much electromagnetic interference on the sensor line → improve EMC

Error code	Diagnostic code	Meaning for the LMV2x/3x... system	Remedy
82	**#**	**Error during VSD's speed standardization**	
	1	*Timeout of standardization (VSD ramp down time too long)*	Timeout at the end of standardization during ramp down of the VSD → ramp time settings of the VSD are not shorter than those of the basic unit (parameter: 523)
	2	*Storage of standardized speed not successful*	Error during storage of the standardized speed → lock the basic unit, then reset it and repeat the standardization
	3	*Line interruption speed sensor*	Basic unit receives no pulses from the speed sensor: 1. Motor does not turn. 2. Speed sensor is not connected. 3. Speed sensor is not activated by the sensor disk (check distance)
	4	*Speed variation / VSD ramp up time too long / speed below minimum limit for standardization*	Motor has not reached a stable speed after ramp up. 1. Ramp time settings of the VSD are not shorter than those of the basic unit (parameters 522, 523). 2. Characteristic of the VSD is not linear. Configuration of the voltage input at the VSD must accord with that of the basic unit (parameter 645). 3. VSD does not follow quickly enough the changes of the basic unit. Check settings of the VSD (input filter, slippage compensation, hiding different speeds) 4. Speed of VSD lies below the minimum for standardization (650 1/min)
	5	*Wrong direction of rotation*	Motor's direction of rotation is wrong. 1. Motor turns indeed in the wrong direction → change parameterization of the direction of rotation or interchange 2 live conductors. 2. Sensor disk is fitted the wrong way → turn the sensor disk.
	6	*Unplausible sensor signals*	The required pulse pattern (60°, 120°, 180°) has not been correctly identified. 1. Speed sensor does not detect all tappets of the sensor disk → check distance 2. As the motor turns, other metal parts are detected also, in addition to the tappets → improve mounting. 3. Electromagnetic interference on the sensor lines → check cable routing, improve EMC
	7	*Invalid standardized speed*	The standardized speed measured does not lie in the permissible range → motor turns too slowly or too fast
	15	*Speed deviation µC1 + µC2*	The speeds of microcomputer 1 and 2 deviated too much. This can be caused by wrong standardized speeds (e.g. after restoring a data set to a new unit) → repeat standardization and check the fuel-air ratio

Error code	Diagnostic code	Meaning for the LMV2x/3x... system	Remedy
	20	*Wrong phase of phase manager*	Standardization was made in a wrong phase. Permitted are only phases ≤12 → controller OFF, start standardization again
	21	*Safety loop / burner flange open*	Safety loop or burner flange is open → repeat standardization with safety loop closed
	22	*Air actuator not referenced*	Air actuator has not been referenced or has lost its referencing. 1. Check if the reference position can be approached. 2. Check if actuators have been mixed up. 3. If error only occurs after the start of standardization, the actuator might be overloaded and cannot reach its destination.
	23	*VSD deactivated*	Standardization was started with VSD deactivated → activate the VSD and repeat standardization
	24	*No valid operating mode*	Standardization was started without valid operating mode → activate valid operating mode and repeat standardization
	25	*Pneumatic air-fuel ratio control*	Standardization was started with pneumatic air-fuel ratio control → standardization with pneumatic air-fuel ratio control not possible
	128	*Running command with no preceding standardization*	VSD is controlled but not standardized → make standardization
	255	*No standardized speed available*	Motor turns but is not standardized → make standardization

Error code	Diagnostic code	Meaning for the LMV2x/3x... system	Remedy
83	**#**	**Speed error VSD**	Required speed has not been reached
	Bit 0 *Valency 1*	*Lower control range limitation of control*	Speed has not been reached because control range limitation has become active → for measures, refer to error code 80
	Bit 1 *Valency 2...3*	*Upper control range limitation of control*	Speed has not been reached because control range limitation has become active → for measures, refer to error code 80
	Bit 2 *Valency 4...7*	*Interruption via disturbance pulses*	Speed has not been reached due to too much electromagnetic interference on the sensor line → for measures, refer to error code 81
	Bit 3 *Valency ≥ 8*	*Curve too steep in terms of ramp speed*	Speed has not been reached because detected curve slope was too steep. 1. With a LMV26... ramp of 20 s, the curve's slope may be a maximum of 10% speed change between 2 curvepoints in modulating mode. With a LMV26... ramp of 10 s, the curve's slope may be a maximum of 20% speed change between 2 curvepoints in modulating mode. With a LMV26... ramp of 5 s, the curve's slope may be a maximum of 40% speed change between 2 curvepoints in modulating mode. → Between the ignition point (P0) and the low-fire point (P1), the speed change in modulating mode may be a maximum of 40%, independent of the LMV26... ramp. 2. The setting of the VSD ramp must be about 20% faster than the ramps in the basic unit (parameters 522, 523).
	Bit 4 *Valency ≥ 16*	*Interruption of speed signal*	No speed detected in spite of control. 1. Check if the motor turns. 2. Check if the speed sensor delivers a signal (LED / check distance from the sensor disk). 3. Check wiring of the VSD.
	Bit 5 *Valency ≥ 32*	*Quick shutdown due to excessive speed deviation*	Speed deviation was for about 1 s >10% outside the anticipated range. 1. Check ramp times of the LMV26... and VSD. 2. Check wiring of the VSD.

Error code	Diagnostic code	Meaning for the LMV2x/3x... system	Remedy
84	**#**	**Curve slope actuators**	
	Bit 0 *Valency 1*	*VSD: Curve too steep in terms of ramp speed*	1. The curve's slope may be a maximum of 10% speed change between 2 curvepoints in modulating operation, with a LMV26... ramp of 20 seconds The curve's slope may be a maximum of 20% speed change between 2 curvepoints in modulating operation, with a LMV26... ramp of 10 seconds The curve's slope may be a maximum of 40% speed change between 2 curvepoints in modulating operation, with a LMV26... ramp of 5 seconds → Between the ignition point (P0) and the low-fire point (P1), the speed change in modulating mode may be a maximum of 40%, independent of the LMV26... ramp. 2. Setting of the VSD ramp must be about 20% shorter than the ramps in the basic unit (parameters 522 and 523)
	Bit 1 *Valency 2..3*	*Fuel actuator: Curve too steep in terms of ramp rate*	The slope of the curve may be a maximum position change of 31° between 2 curvepoints in modulating mode
	Bit 2 *Valency 4..7*	*Air actuator: Curve too steep in terms of ramp rate*	The slope of the curve may be a maximum position change of 31° between 2 curvepoints in modulating mode
85	**#**	*Referencing error ones actuators*	
	0	*Referencing error of fuel actuator*	Referencing of fuel actuator not successful. Reference point could not be reached. 1. Check to see if actuators have been mixed up. 2. Check to see if actuator is locked or overloaded.
	1	*Referencing error of air actuator*	Referencing of fuel actuator not successful Reference point could not be reached. 1. Check to see if actuators have been mixed up. 2. Check to see if actuator is locked or overloaded.
	Bit 7 *Valency ≥ 128*	*Referencing error due to parameter change*	Parameterization of an actuator (e.g. the reference position) has been changed. To trigger new referencing, this error is set
86	**#**	**Error fuel actuator**	
	0	*Position error*	Target position could not be reached within the required tolerance band → check to see if actuator is locked or overloaded
	Bit 0 *Valency 1*	*Line interruption*	*Line interruption* detected at actuator's terminals → check wiring (voltage X54 across pin 5 or 6 and pin 2 >0.5 V)
	Bit 3 *Valency ≥8*	*Curve too steep in terms of ramp rate*	The slope of the curve may be a maximum position change of 31° between 2 curvepoints in modulating mode
	Bit 4 *Valency ≥ 16*	*Step deviation in comparison with last referencing*	Actuator was overloaded or mechanically twisted. 1. Check to see if the actuator is blocked somewhere along its working range. 2. Check to see if the torque is sufficient for the application.

Error code	Diagnostic code	Meaning for the LMV2x/3x... system	Remedy
87	**#**	**Error air actuator**	
	0	*Position error*	Target position could not be reached within the required tolerance band → check to see if actuator is locked or overloaded
	Bit 0 *Valency 1*	*Line interruption*	Line interruption detected at actuator's terminals → check wiring (voltage X53 across pin 5 or 6 and pin 2 >0.5 V)
	Bit 3 *Valency ≥ 8*	*Curve too steep in terms of ramp rate*	The slope of the curve may be a maximum position change of 31° between 2 curvepoints in modulating mode
	Bit 4 *Valency ≥ 16*	*Sectional deviation in comparison with last referencing*	Actuator was overloaded or mechanically twisted. 1. Check to see if the actuator is blocked somewhere along its working range. 2. Check to see if the torque is sufficient for the application.
90	**#**	**Internal error basic unit**	
91	**#**	**Internal error basic unit**	
93	**#**	**Error flame signal acquisition**	
	3	*Short-circuit of sensor*	Short-circuit at QRB... 1. Check wiring. 2. Flame detector possibly fault.
95	**#**	**Error relay supervision**	
	3 Ignition transformer *4 Fuel valve 1* *5 Fuel valve 2* *6 Fuel valve 3*	*External power supply NO contact*	Check wiring
96	**#**	**Error relay supervision**	
	3 Ignition transformer *4 Fuel valve 1* *5 Fuel valve 2* *6 Fuel valve 3*	*Relay contacts have welded*	Test the contacts: 1. Unit connected to power: Fan output must be dead. 2. Disconnect power: Disconnect fan. No resistive connection between fan output and neutral conductor allowed. If one of the 2 tests fails, release the unit since contact have definitively welded and safety can no longer be ensured.
97	**#**	**Error relay supervision**	
	0	*Safety relay contacts have welded or external power supply fed to safety relay*	Test the contacts: 1. Unit connected to power: Fan output must be dead. 2. Disconnect power: Disconnect fan. No resistive connection between fan output and neutral conductor allowed. If one of the 2 tests fails, release the unit since contacts have definitively welded and safety can no longer be ensured.

Error code	Diagnostic code	Meaning for the LMV2x/3x... system	Remedy
98	**#**	**Error relay supervision**	
	2 Safety valve *3 Ignition transformer* *4 Fuel valve 1* *5 Fuel valve 2* *6 Fuel valve 3*	*Relay does not pull in*	Make a reset; if error occurs repeatedly, replace the unit
99	**#**	**Internal error relay control**	Make a reset; if error occurs repeatedly, replace the unit
	3	*Internal error relay control*	Make a reset. If error occurs repeatedly, replace the unit Software version V03.10: If error C:99 D:3 occurs during standardization of the VSD, deactivate temporarily function *Alarm in case of start prevention* (parameter number 210 = 0, when using a release contact) or *interrupt* the controller-ON signal
100	**#**	**Internal error relay control**	Make a reset; if error occurs repeatedly, replace the unit
105	**#**	**Internal error contact sampling**	
	0 Pressure switch-min *1 Pressure switch-max / POC* *2 Fuel selection 0 / Reset* *3 Air pressure* *4 Load controller open* *5 Load controller on / off* *6 Load controller close* *7 Safety loop / Burner flange* *8 Safety valve* *9 Ignition transformer* *10 Fuel valve 1* *11 Fuel valve 2* *12 Fuel valve 3* *13 Fuel selection 1 / Reset*	*Stuck-At failure*	Can be caused by capacitive loads or supply of DC voltage to the mains voltage inputs. The diagnostic code indicates the input where the problem occurred
106	**#**	**Internal error contact request**	Make a reset; if error occurs repeatedly, replace the unit
107	**#**	**Internal error contact request**	Make a reset; if error occurs repeatedly, replace the unit
108	**#**	**Internal error contact request**	Make a reset; if error occurs repeatedly, replace the unit
110	**#**	**Internal error voltage monitor test**	Make a reset; if error occurs repeatedly, replace the unit
111	**#**	**Power failure**	Mains voltage to low Exchange ratio diagnostics code → voltage value (230 V: 1.683)
112	*0*	*Mains voltage recovery*	Error code for triggering a reset on power restoration (no error)
113	**#**	**Internal error mains voltage supervision**	Make a reset; if error occurs repeatedly, replace the unit
115	**#**	**Internal error system counter**	
116	*0*	*Designed life time exceeded (250´000 startups)*	Warning threshold has been reached. The unit should be replaced

Error code	Diagnostic code	Meaning for the LMV2x/3x... system	Remedy
117	*0*	*Life time exceeded* *Operation no longer allowed*	Switch-off threshold has been reached
120	*0*	*Interrupt limitation fuel meter input*	Too many disturbance pulses at the fuel meters input → Improve EMC
121	**#**	**Internal error EEPROM access**	Make a reset, repeat last parameterization / check. Restore the parameter set, if error occurs repeatedly, replace the unit
122	**#**	**Internal error EEPROM access**	Make a reset, repeat last parameterization / check. Restore the parameter set, if error occurs repeatedly, replace the unit
123	**#**	**Internal error EEPROM access**	Make a reset, repeat last parameterization / check. Restore the parameter set, if error occurs repeatedly, replace the unit
124	**#**	**Internal error EEPROM access**	Make a reset, repeat last parameterization / check. Restore the parameter set, if error occurs repeatedly, replace the unit
125	**#**	**Internal error EEPROM read access**	Make a reset, repeat last parameterization / check. If error occurs repeatedly, replace the unit
126	**#**	**Internal error EEPROM write access**	Make a reset, repeat last parameterization / check. If error occurs repeatedly, replace the unit
127	**#**	**Internal error EEPROM access**	Make a reset, repeat last parameterization / check. Restore the parameter set, if error occurs repeatedly, replace the unit
128	*0*	*Internal error EEPROM access - synchronization during initialization*	Make a reset; if error occurs repeatedly, replace the unit
129	**#**	**Internal error EEPROM access – command synchronization**	Make a reset, repeat last parameterization / check. If error occurs repeatedly, replace the unit
130	**#**	**Internal error EEPROM access - timeout**	Make a reset, repeat last parameterization / check. If error occurs repeatedly, replace the unit
131	**#**	**Internal error EEPROM access - page on abort**	Make a reset, repeat last parameterization / check. If error occurs repeatedly, replace the unit
132	**#**	**Internal error EEPROM register initialization**	Make a reset; if error occurs repeatedly, replace the unit
133	**#**	**Internal error EEPROM access – Request synchronization**	Make a reset, repeat last parameterization / check. If error occurs repeatedly, replace the unit
134	**#**	**Internal error EEPROM access – Request synchronization**	Make a reset, repeat last parameterization / check. If error occurs repeatedly, replace the unit
135	**#**	**Internal error EEPROM access – Request synchronization**	Make a reset, repeat last parameterization / check. If error occurs repeatedly, replace the unit
136	*1*	*Restore started*	Restore of a backup has been started (no error)

Error code	Diagnostic code	Meaning for the LMV2x/3x... system	Remedy
137	**#**	**Internal error – backup / restore**	
	157 (-99)	*Restore – ok, but backup < data set of current system*	Restore successful, but backup data record is smaller than in the current system
	239 (-17)	*Backup – storage of backup in AZL2... faulty*	Reset and repeat backup
	240 (-16)	*Restore – no backup in AZL2...*	No backup stored in AZL2...
	241 (-15)	*Restore – abortion due to unsuitable product no. (ASN)*	Backup has an unsuitable product no. (ASN) and must not be restored
	242 (-14)	*Backup – backup made is inconsistent*	Backup is faulty and cannot be transferred back
	243 (-13)	*Backup – data comparison between µCs faulty*	Reset and repeat backup
	244 (-12)	*Backup data are incompatible*	Backup data are incompatible with the current software version, restore not possible
	245 (-11)	*Access error to parameter Restore_Complete*	Reset and repeat backup
	246 (-10)	*Restore – timeout when storing in EEPROM*	Reset and repeat backup
	247 (-9)	*Data received are inconsistent*	Backup data record invalid, restore not possible
	248 (-8)	*Restore cannot at present be made*	Reset and repeat backup
	249 (-7)	*Restore – abortion due to unsuitable burner identification*	Backup has an unsuitable burner identification and must not be transferred to the unit
	250 (-6)	*Backup – CRC of one page is not correct*	Backup data record invalid, restore not possible
	251 (-5)	*Backup – burner identification is not defined*	Define burner identification and repeat backup
	252 (-4)	*After restore, pages still on ABORT*	Reset and repeat backup
	253 (-3)	*Restore cannot at present be made*	Reset and repeat backup
	254 (-2)	*Abortion due to transmission error*	Reset and repeat backup
	255 (-1)	*Abortion due to timeout during backup / restore*	Make a reset, check the connections and repeat backup / restore In case of repeated backup timeout, the AZL2... does not yet support backup functionality
146	**#**	**Timeout building automation interface**	Refer to Modbus User Documentation (A7541)
	1	*Modbus timeout*	
	2	*reserved*	

Error code	Diagnostic code	Meaning for the LMV2x/3x... system	Remedy
150	**#**	**TÜV test**	
	1 (-1)	*Invalid phase*	TÜV test may only be started in phase 60 (operation)
	2 (-2)	*TÜV test default output too low*	TÜV test default output must not be smaller than the lower output limit
	3 (-3)	*TÜV test default output too high*	TÜV test default output must not be greater than the upper output limit
	4 (-4)	*Manual interruption*	No error: Manual abortion of TÜV test by user
	5 (-5)	*TÜV test timeout*	No loss of flame after shutdown of fuel valves 1. Check to see if there is extraneous light 2. Check wiring to see if there is a short-circuit 3. Check to see if valve is leaking
165	**#**	**Internal error**	
166	*0*	*Internal error watchdog reset*	
167	**#**	**Manual locking**	Unit has been manually locked (no error)
	1	*Manual locking by contact*	
	2	*Manual locking by AZL2...*	
	3	*Manual locking by PC tool*	
	8	*Manual locking by the AZL2...* *Timeout / communication breakdown*	During a curve adjustment via the AZL2..., the timeout for menu operation has elapsed (setting via parameter 127), or communication between the LMV26... and the AZL2... has broken down
	9	*Manual locking by the PC tool* *Communication breakdown*	During a curve adjustment via the ACS410, communication between the LMV26... and the ACS410 was interrupted for more than 30 seconds
	33	*Manual locking by the PC tool* *Test of lockout*	PC tool made a reset attempt with an error-free system
168	**#**	**Internal error management**	Make a reset; if error occurs repeatedly, replace the unit
169	**#**	**Internal error management**	Make a reset; if error occurs repeatedly, replace the unit
170	**#**	**Internal error management**	Make a reset; if error occurs repeatedly, replace the unit
171	**#**	**Internal error management**	Make a reset; if error occurs repeatedly, replace the unit
200 OFF	**#**	**System error-free**	No error

Error code	Diagnostic code	Meaning for the LMV2x/3x... system	Remedy
201 OFF UPr0 or **OFF UPr1**	**#**	**Prevention of startup**	Start prevention due to unparameterized unit Go to error history, entry 702, for initial cause of the error with shutdown in connection with the first curve settings
	Bit 0 *Valency 1*	*No operating mode selected*	
	Bit 1 *Valency 2..3*	*No fuel train defined*	
	Bit 2 *Valency 4..7*	*No curves defined*	
	Bit 3 *Valency 8..15*	*Standardized speed undefined*	
	Bit 4 *Valency 16..31*	*Backup / restore was not possible*	
202	**#**	**Internal error operating mode selection**	Redefine the operating mode (parameter 201)
203	**#**	**Internal error**	Redefine the operating mode (parameter 201). Make a reset; if error occurs repeatedly, replace the unit
204	**Phase number**	**Program stop**	Program stop is active (no error)
205	**#**	**Internal error**	Make a reset; if error occurs repeatedly, replace the unit
206	*0*	*Inadmissible combination of units (basic unit – AZL2...)*	
207	**#**	**Version compatibility basic unit – AZL2...**	
	0	*Basic unit version too old*	
	1	*AZL2... version too old*	
208	**#**	**Internal error**	Make a reset; if error occurs repeatedly, replace the unit
209	**#**	**Internal error**	Make a reset; if error occurs repeatedly, replace the unit
210	*0*	*Selected operating mode is not released for the basic unit*	Select a released operating mode for the basic unit
240	**#**	**Internal error**	Make a reset; if error occurs repeatedly, replace the unit
245	**#**	**Internal error**	Make a reset; if error occurs repeatedly, replace the unit
250	**#**	**Internal error**	Make a reset; if error occurs repeatedly, replace the unit

WIRING DIAGRAM

Wiring connection for LMV20

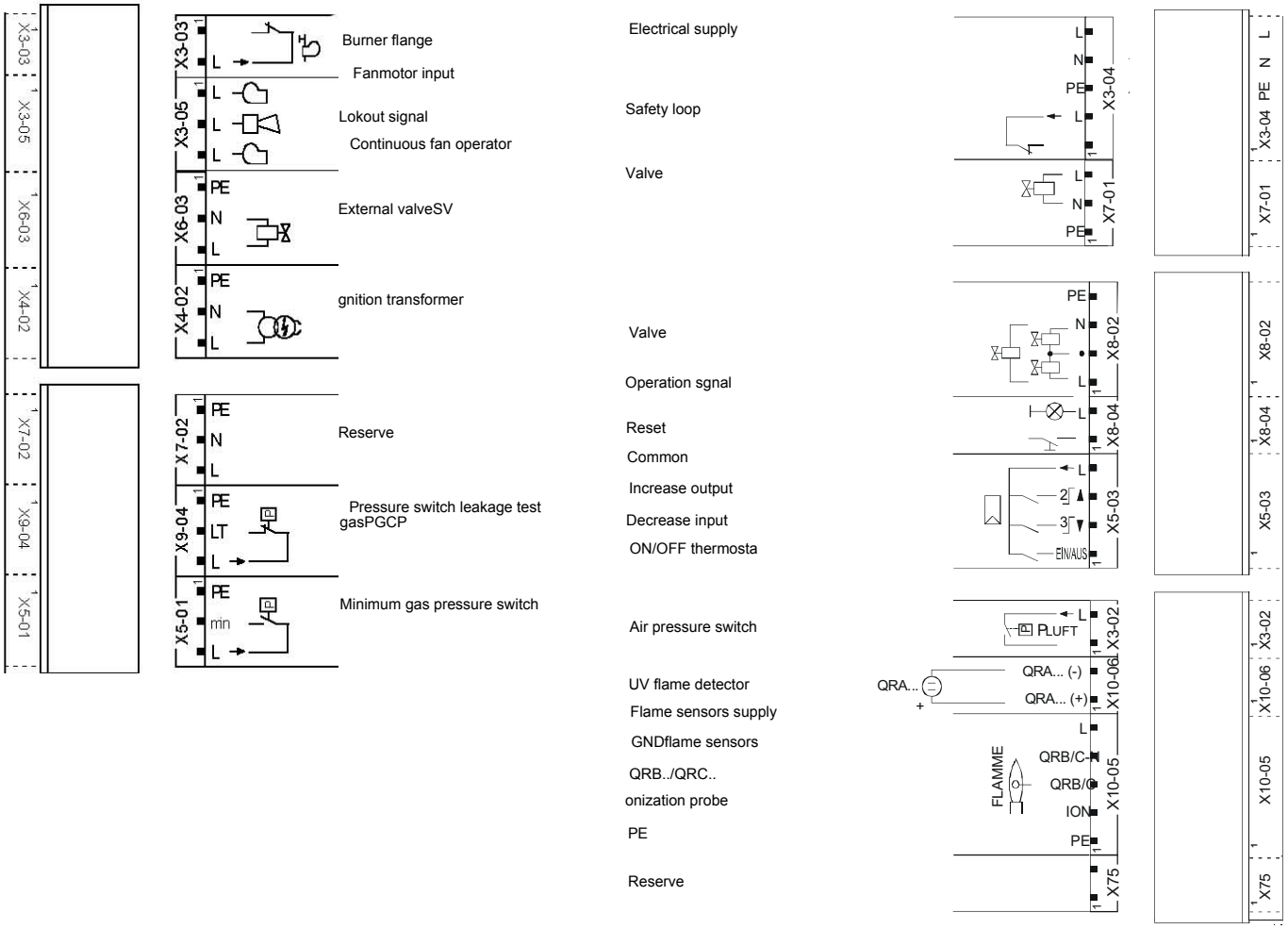

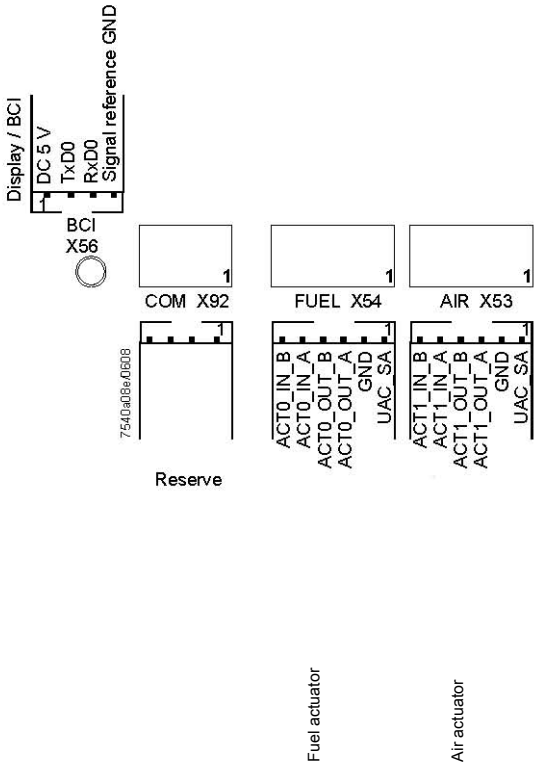

Wiring variants for LMV27

ConnectorX75

2 - Fuel meter input

1 - Supply fuel meter

ConnectorX5-02

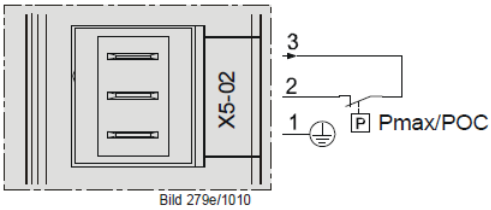

ConnectionsPmax

Wiring variants for LMV26

ConnectorX08-04 / X09-04

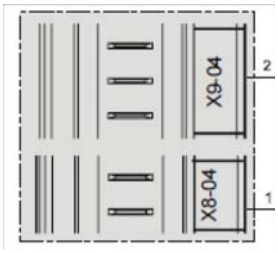

2 - Fuel 0

1 - Fuel1

ConnectorX75

2 - Fuel meter input

1 - Supply fuel meter

ConnectorX64

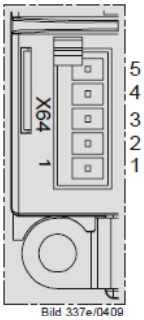

5 -Power supply speed sensor

4 -Speed sensor input

3 - PWM (Pulse Width Modulation) speed output

2 - GND (signal reference)

1 -Controller input (4÷20mA)

ConnectorX74

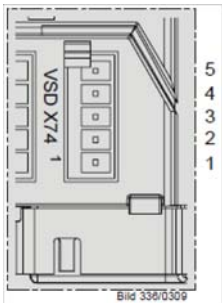

5 -Supply

4 -Feedback signal

3 - PWM (Pulse Width Modulation) speed output

2 - GND (signal reference)

1 -External supply 24V DC

Wiring variants for LMV37

ConnectorX75

2 - Fuel meter input

1 - Supply fuel meter

ConnectorX5-02

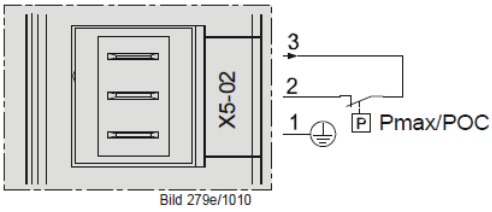

Connections Pmax

ConnectorX64

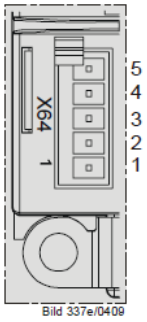

5 -Power supply speed sensor

4 -Speed sensor input

3 - PWM (Pulse Width Modulation) speed output

2 - GND (signal reference)

1 -Controller input (4÷20mA)

ConnectorX74

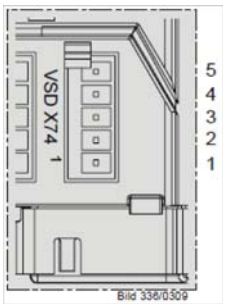

5 -Supply

4 -Feedback signal

3 - PWM (Pulse Width Modulation) speed output

2 - GND (signal reference)

1 -External supply 24V DC

C.I.B. UNIGAS S.p.A.
Via L.Galvani, 9 - 35011 Campodarsego (PD) - ITALY
Tel. +39 049 9200944 - Fax +39 049 9200945/9201269
web site: www.cibunigas.it - e-mail: cibunigas@cibunigas.it

Note: Specifications and and data subject to change. Errors and omissions excepted.

RWF55.5X & RWF55.6X

User manual

M12926CA Rel.0.2 11/2023

DEVICE INSTALLATION

Fixing system

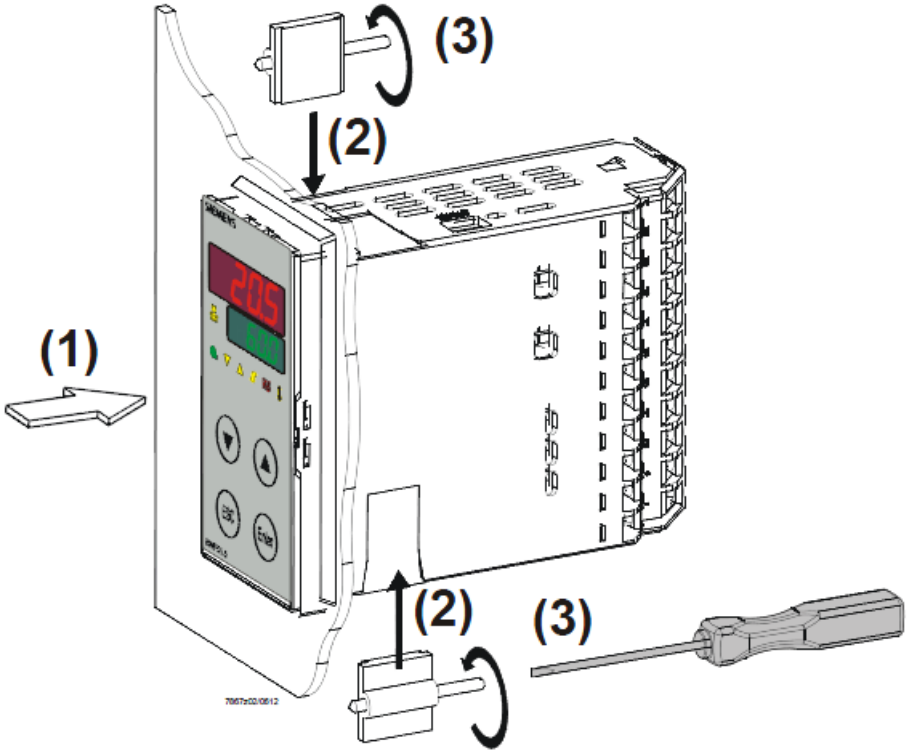

Drilling dimensions:

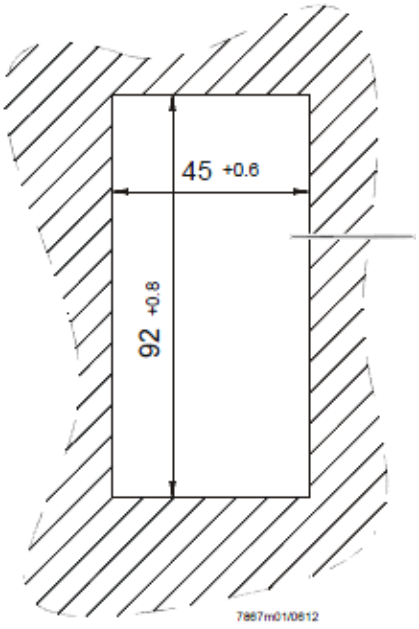

FRONT PANEL

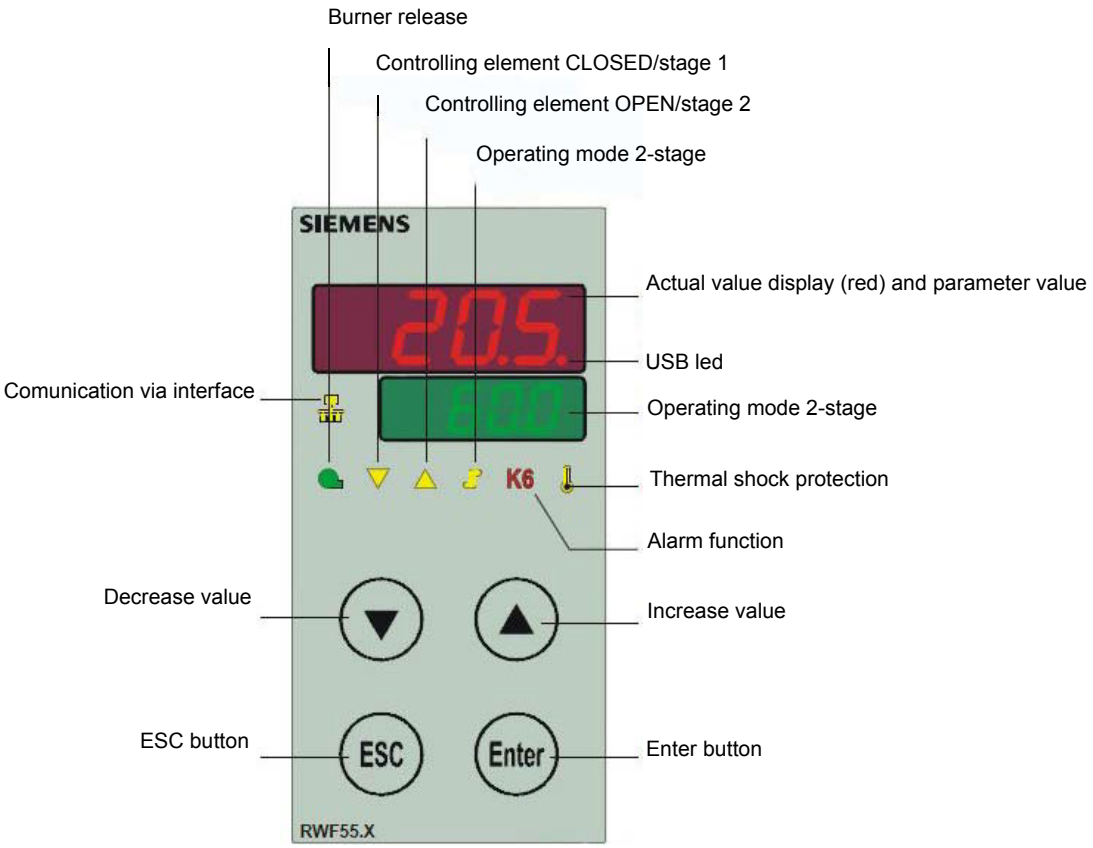
Burner release
Controlling element CLOSED/stage 1
Controlling element OPEN/stage 2
Operating mode 2-stage
SIEMENS
Actual value display (red) and parameter value
USB led
Comunication via interface
Operating mode 2-stage
K6
Thermal shock protection
Alarm function
Decrease value
Increase value
ESC button
ESC
Enter
Enter button
RWF55.X

NAVIGATION MENU

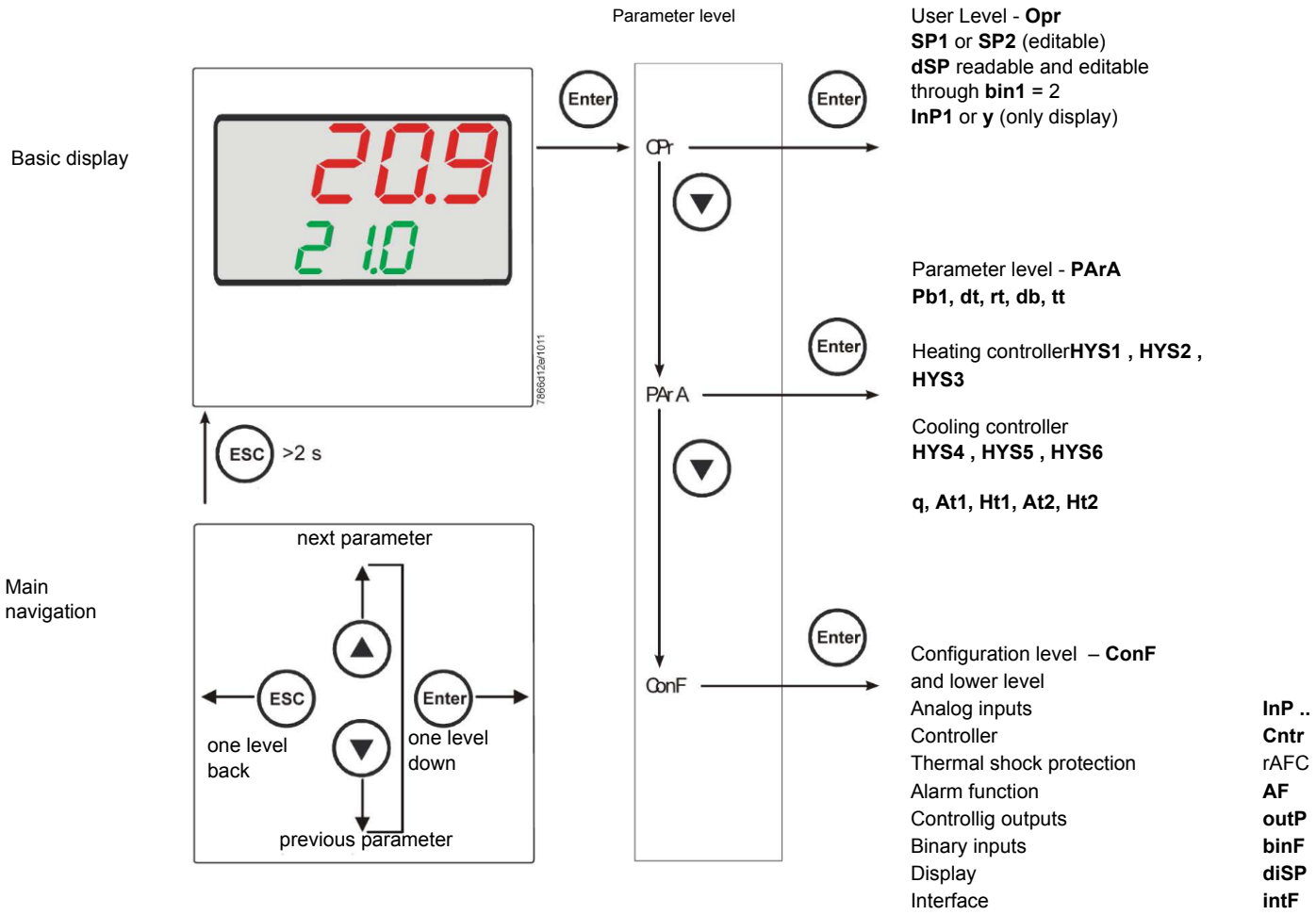

RWF55 is preset good for 90% of applications. However, you can set or edit parameters as follow:

Set-point: set or modification:

When the burner is in stand-by, (safety loop open, that is terminals 3-4/T1-T2 on the 7 pole plug open) push the Enter button: on the lower display (green) Opr appears; push Enter again and in the same display SP1 appears. Push Enter again and the lower display (green SP1) flashes. Using the up and down arrows change the set-point on the upper display (red).Push Enter to confirm and push ESC more times to get the home position.

PID parameters set and modifications (PArA):

Push **Enter** button, on the green display **Opr** appears; using the **down arrow,** scroll until group **PArA** is reached and push **Enter**.
On the green display **Pb1** e appears and on the red one the set parameter. Push is sequence the **down or up** arrow the menu is scrolled.
Push **Enter** to select and the **arrows** to choose the desired value. **Enter** to confirm

Parameter	Display	Range	Factory setting	Remarks
Proportional band	Pb1	1… 9999 digit	10	Typical value for temperature
erivative action	dt	0… 9999 sec.	80	Typical value for temperature
Integral action	rt	0… 9999 sec.	350	Typical value for temperatureT
Dead band (*)	db	0… 999,9 digit	1	Typical value
Servocontrol running time	tt	10… 3000 sec.	15	Set servocontrol running time
Switch-on differential (*)	HYS1	0,0… -1999 digit	-5	Value under setpoint below which the burner switches back on (1N-1P closes)
Switch-off differential 2° stage (*)	HYS2	0,0 … HYS3	3	(enable only with parameter bin1 = 4)
Upper switch-off differential (*)	HYS3	0,0… 9999 digit	5	Value over setpoint above which the burner switches off (1N-1P opens)
Switch-on differential on cooling controller (*)	HYS4	0,0… 9999 digit	5	Do not used (enable only with parameter **CACt** = 0)
Switch-off differential 2° stage on cooling controller (*)	HYS5	HYS6…0,0 digit	5	Do not used (enable only with parameter **CACt** = 0 and parameter **bin1**=0)
Upper switch-off differential on cooling controller (*)	HYS6	0,0… -1999 digit	5	Do not used (enable only with parameter CACt = 0)
Delay modulation	q	0,0… 999,9 digit	0	Do not alter
T Outside temperature Curve point 1 (*)	At1	-40 ...120 digit	-10	First point of external temperature for climatic curve
Boiler temperature Curve point 1 (*)	Ht1	SPL...SPH	60	Set-point temperature for the external temperature 1
TT Outside temperature Curve point 2 (*)	At2	-40 ...120 digit	20	Second point of external temperature for climatic curve
Boiler temperature Curve point 2 (*)	Ht2	SPL...SPH	50	Set-point temperature for the external temperature 2

(*) Parameters affected by setting of decimal place (**ConF > dISP** parameter **dECP**)

Setting the kind of sensor to be connected to the device:

Push the **Enter** button: on the lower display (green) **Opr** appears. Using the **up and down arrows** find **ConF.** Push **Enter** to confirm. Now on the green display the group **InP** appears. Push **Enter** and **InP1** is displaied. Enter to confirm.You are inside **InP1**; the green display shows **Sen1 (sensor type)**, while the red display shows the chosen sensor code Push **Enter** to enter the **Sen1** parameter, then choose the desired sensor using the **arrows.** Push **Enter** to confirm and **ESC** to escape.

Once selected the sensor, you can modify all the other parameters using **up and down arrows** according to the tables here below :

ConF > InP >InP1

Parameter	Value	Description
SEn1 type of sensor for analog input 1	1	Pt100 3 wire
	2	Pt100 2 wire
	3	Pt1000 3 wire
	4	Pt1000 2 wire
	5	Ni1000 3 wire
	6	Ni1000 2 wire
	7	0 ÷ 135 ohm
	8	Cu-CuNi T
	9	Fe-CuNi J
	10	NiCr-Ni K
	11	NiCrSi-NiSi N
	12	Pt10Rh-Pt S
	13	Pt13Rh-Pt R
	14	Pt30Rh-Pt6Rh B
	15	0 ÷ 20mA
	16	4 ÷ 20mA
	17	0 ÷ 10V
	18	0 ÷ 5V
	19	1 ÷ 5V
OFF1 Sensor offset	-1999..**0**.. +9999	Correction value measured by the sensor
SCL1 scale low level	-1999..**0**.. +9999	minimum scale value(for input ohm, mA, V)
SCH1 scale high level	-1999..**100**.. +9999	maximum scale value(for input ohm, mA, V)
dF1 digital filter	0…**0,6**…100	Is used to adapt the digital 2nd order input filter (time in s; 0 s = filter off)
Unit temperature unit	**1** 2	1 = **degrees** Celsius 2 = degrees Fahrenheit

(**bold** = factory settings)

ConF > InP >InP2

Input 2 : this input can be used to specify an external setpoint or carry out setpoint shifting

Parameter	Value	Description
FnC2	0 1 2 3	0= **no function** 1= external setpoint (display **SPE**) 2 =setpoint shifting (display **dSP**) 3 = angular positioning feedback
SEn2 tisensor type input 2	1	0 ÷ 20mA
	2	4 ÷ 20mA
	3	0 ÷ 10V
	4	0 ÷ 5V
	5	1 ÷ 5V
	1	0 ÷ 20mA
OFF2 Sensor offset	-1999..**0**.. +9999	Correction value measured by the sensor
SCL2 scale low level	-1999..**0**.. +9999	minimum scale value(for input ohm, mA, V)
SCH2 scale high level	-1999..**100**.. +9999	maximum scale value(for input ohm, mA, V)
dF2 digital filter	0…**2**…100	Is used to adapt the digital 2nd order input filter (time in s; 0 s = filter off)

(**bold** = factory settings)

ConF > InP >InP3

Input 3: this input is used to acquire the outside temperature

Parameter	Value	Description
SEn3 sensor type input 3sensor type input 2	0	0 =
	1	1 = wire
	2	2 = wire
OFF3 Sensor offset	-1999..**0**.. +9999	Correction value measured by the sensor
dF3 digital filter	0…**1278**…1500	Is used to adapt the digital 2nd order input filter (time in s; 0 s = filter off)

(**bold** = factory settings)

ConF > Cntr

Here, the type of controller, operating action, setpoint limits and presettings for self-optimization are selected

Parameter	Value	Description
CtYP controller type	1 2	**1 = 3-position controller (open-stop-close)** 2 = continuative action controller (0 ÷10V or 4 ÷ 20mA)
CACt control action	**1** 0	1 = **heating controller** 0 = cooling controller
SPL least value of the set-point range	-1999..**0**..+9999	minimum set-point scale
SPH maximum value of the set-point range	-1999..**100**..+999	maximum set-point scale
Self-optimization	0 1	0 = **Free** 1 = Locked Self-optimization can only be disabled or enabled via the ACS411 setup program. Self-optimization is also disabled when the parameter level is locked
oLLo set-point limitation start, operation limit low	**-1999**.... +9999	lower working range limit
oLHi set-point limitation end, operation limit high	-1999.... **+9999**	upper working range limit

(**bold** = factory settings)

ConF > rAFC

Activation boiler shock termic protetion:

RWF55.. can activate the thermal shock protection only on sites where the set-point is lower than 250°C and according to **rAL** parameter

Parameter	Value	Description
FnCT type of contol	 **0** 1 2	tchoose type of range degrees/time **0 = deactived** 1 = Kelvin degrees/minute 2 = Kelvin degrees/hour
rASL ramp rate	**0,0 …** 999,9	Slope of thermal shock protection (only with functions 1 and 2) .
toLP tolerance band ramp	**2 x (HYS1) = 10**…9999	width of tolerance band (in K) about the set-point **0 = tolerance band inactive** 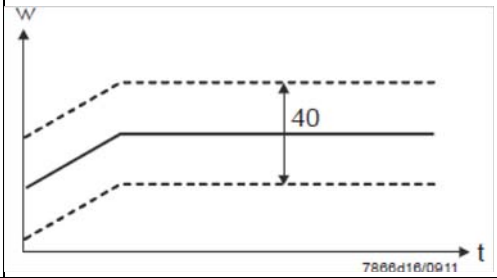
rAL ramp limit	**0**…250	Ramp limit. When this value is lower than the temperature set-point, the RWF controls the output increasing the temp set point step by step according to **rASL**. If this is over the temp set point, the control is performed in cooling

(**bold** = factory settings)

Alarm functionAF

The alarm function can be used to monitor the analog inputs. If the limit value is exceeded, multifunctional relay K6 (terminals **6N** and **6P**) is activated (depending on the switching characteristic)

The alarm function can have different switching functions (lk1 to lk8) and can be set to a deviation from the active setpoint or to a fixed limit value

Limit value **AL** relative to setpoint (x)

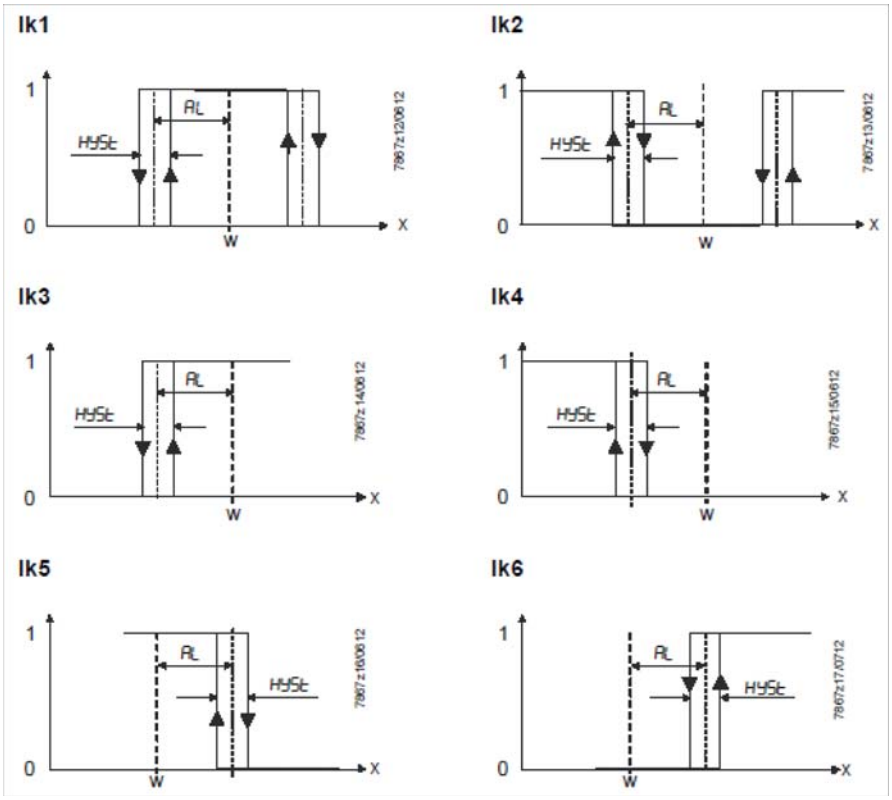

Fixed limit value **AL**

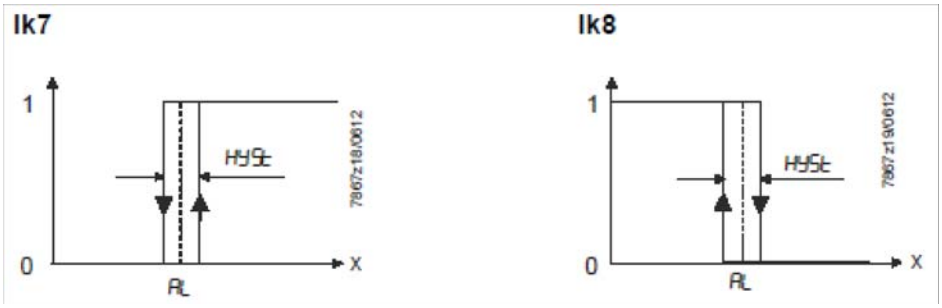

ConF > AF

Parameter	Value	Description
FnCt type of control	0 1 2 3 4 5 6 7 8 9 10 11 12	0 = **Without function** Ik1 = monitored input **InP1** Ik2 = monitored input **InP1** Ik3 = monitored input **InP1** Ik4 = monitored input **InP1** Ik5 = monitored input **InP1** Ik6 = monitored input **InP1** Ik7 = monitored input **InP1** Ik8 = monitored input **InP1** Ik7 = monitored input **InP2** Ik8 = monitored input **InP2** Ik7 = monitored input **InP3** Ik8 = monitored input **InP3**
Alarm value AL	-1999 ... **0** 1999	Limit value or deviation from setpoint to be monitored (see alarm functions **Ik1** to **Ik8**: limit value **AL**) Limit value range for **Ik1** and **Ik2**0 ...9999
HySt switching differential	0… **1**... 9999	Switching differential for limit value **AL**
ACrA response by out of range	**0** 1	**Switched-off** ON Switching state in the case of measuring range overshoot or undershoot (Out of Range)

(**bold** = factory settings)

ConF > OutP

For fuel-air ratio control purposes, the RWF55 has the binary outputs K2, K3 (terminals KQ,K2, K3) and the analog output (terminals A+, A-). The burner is released via relay K1 (terminals 1N, 1P) .

The binary outputs of the RWF55 offer no setting choices

The RWF55 has an analog output.

The analog output offers the following setting choices:

Parameter	Value	Description
FnCt type of control	1 2 3 **4**	1 = analog input 1 doubling with possibility to convert 2 = analog input 2 doubling with possibility to convert 3 = analog input 3 doubling with possibility to convert **4 = Controller's angular positioning is delivered (modulating controller)**
SiGn type of output signal	 **0** 1 2	physical output signal (terminals A+, A-) **0 = 0÷20mA** 1 = 4÷20mA 2 = 0÷10V DC
rOut value when out of input range	**0**…101	signal (in percent) when measurement range is crossed
oPnt zero point	-1999…**0**..+9999	A value range of the output variable is assigned to a physical output signal (for **FnCt** = 1, 2, 3)
End end point	-1999…**100**..+9999	A value range of the output variable is assigned to a physical output signal (for **FnCt** = 1, 2, 3)

(**bold** = factory settings)

ConF > binF

This setting decides on the use of the binary inputs**D1**, **D2**, **DG**

b

Parameter	Value	Description
bin1 binary imput 1 (terminals **DG – D1**)	**0** 1 2 3	**0 = without function** 1 = set-point changeover (SP1 / SP2) 2 = Iset-point shift (Opr > dSP parameter = value of set-point modify) 3 = input alarm
bin2 binary imput 2 (terminalsк **DG – D2**)	**4**	**changeover of operating mode** DG-D2 open = modulating operation DG-D2 close = 2 stage operation

(**bold** = factory settings)

ConF > dISP

.Both displays can be customized to suit your needs by configuring the displayed value, decimal, time out and blocking

Parameter	Value	Description
diSU pper display (red)	0 **1** 2 3 4 6 7	Display value for upper display: 0 = display power-off **1 = analog input 1 (InP1) value** 2 = analog input 2 (InP2) value 3 = analog input 3 (InP3) value 4 = controller's angular positioning 6 = set-point valueв 7 = end value with thermal shock protection
diSL lower display (green)	0 1 2 3 4 **6** 7	Display value for lower display3: 0 = display power-off 1 = analog input 2 (InP2) value 2 = analog input 2 (InP2) value 3 = analog input 2 (InP2) value 4 = controller's angular positioning **6 =** set-point value**в** 7 = end value with thermal shock protection
tout timeout	0..**180**..250	time (s) on completion of which the controller returns automatically to the basic display, if no button is pressed
dECP decimal point	**0** 1 2	**0 = no decimal place** 1 = one decimal place 2 = two decimal place
CodE level lockout	**0** 1 2 3	**0 = no lockout** 1 = configuration level lockout (**ConF**) 2 = parameter and configuration level lockout (**PArA** & **ConF**) 3 = keyboard lockout

(**bold** = factory settings)

ConF > IntF

The controller can be integrated into a data network using an optional RS-485 (terminals R+ and R-) interface or an optional Profibus DP interface(only model**RWF55.6x** terminalsC1-C2-C3-C4)

Parameter	Value	Description
bdrt baudrate	**0** 1 2 3	**0 = 4800 baud** 1 = 9600 baud 2 = 19200 baud 3 = 38400 baud
Adr Device address Modbus	0.. **1**.. 254	Address in the data network
dP Device address Profibus	0..**125**	only withRWF55.6x
dtt Remote detection time	0.. **30**.. 7200s	0 = swiched-off

(**bold** = factory settings)

Manual control :

In order to manual change the burner load, while firing keep pushing the **ESC** button for more than 5 s; on the lower green display **Hand** appears.

using the **UP** and **DOWN** arrows, the load varies.

Keep pushing the **ESC** button for getting the normal operation again.

NB: every time the device shuts the burner down (start led switched off - contact 1N-1P open), the manual control is not active.

Device self-setting (auto-tuning):

If the burner in the steady state does not respond properly to heat generator requests, you can activate the Device's self-setting function, which recalculates PID values for its operation, deciding which are most suitable for the specific kind of request

Follow the below instructions:

push the **UP** and **DOWN** arrows for more than 5 s; on the green lower display **tUnE** appears. Now the device pushes the burner to increase and decrease its output. During this time, the device calculates **PID** parameters (**Pb1**, **dt** and **rt**). After the calculations, the **tUnE** is automatically deactivated and the device has already stored them.

In order to stop the Auto-tuning function while it works, push again the **UP** and **DOWN** arrows for more than 5 s. The calculated **PID** parameters can be manually modified following the previously described instructions.

Display of software version :

The software version is shown by pushing Enter + UP arrow on the upper display.

Weather-compensated setpoint shifting(climatic regulation):

The RWF55 can be configured so that weather-compensated setpoint shifting is activated when an LG-Ni1000 outside sensor or a Pt1000 is connected (see parameter **InP3**).

To take into account the time response of a building, weather-compensated setpoint shifting uses the attenuated outside temperature rather than the current outside temperature

The minimum and maximum setpoints can be set using the lower setpoint limit **SPL** and the upper setpoint limit **SPH** of the menù **Crtr**.

The system also prevents the lower working range limit **oLLo** and upper working range limit **oLHi** from exceeding/dropping below the system temperature limits.

The heating curve describes the relationship between the boiler temperature setpoint and the outside temperature. It is defined by 2 curve points. For 2 outside temperatures, the user defines the boiler temperature setpoint that is required in each case. The heating curve for the weather-compensated setpoint is calculated on this basis. The effective boiler temperature setpoint is limited by the upper setpoint limit **SPH** and the lower setpoint limit **SPL**.

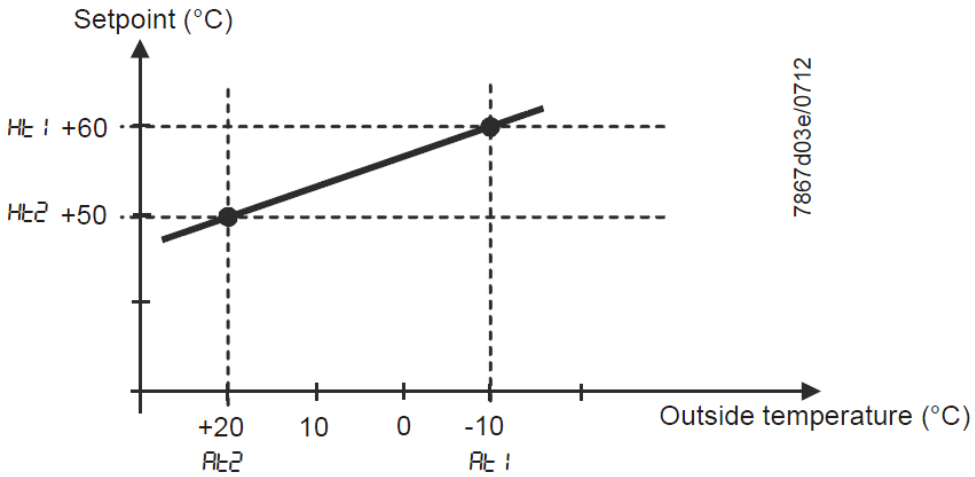

For setting climatic regulation function set:

PArA > parameters**At1, Ht1, At2, Ht2**

ConF > InP > InP3 parameters**SEn3, FnC3 = 1** (Weather-compensated setpoint).

Modbus interface

The tables that follow in this chapter specify the addresses of the readable and writable words that the customer is able to access. The customer may read and/or write the values using SCADA programs, PLCs, or similar.

The entries under Access have the following meanings:

R/O Read Only, value can only be read

R/W Read/Write, value can be read and written

The number of characters specified under Data type in the case of character strings includes the final \0.

Char10 means that the text is up to 9 characters long. The final \0 character is then added to this

User level

Address	**Access**	**Data type**	Signal reference	Parameter
0x0000	R/O	Float	X1	Analog input InP1
0x0002	R/O	Float	X2	Analog input InP2
0x0004	R/O	Float	X3	Analog input InP2
0x0006	R/O	Float	WR	Actual setpoint
0x0008	R/W	Float	SP1	Setpoint 1
0x000A	R/W	Float	SP2 (= dSP)	Setpoint 2
0x1035	R/O	Float	---	Analog input InP3 (unfiltered)
0x1043	R/O	Float	---	Actual angular positioning
0x1058	R/O	Word	B1	Burner alarm

Parameter level

Address	**Access**	**Data type**	Signal reference	Parameter
0x3000	R/W	Float	Pb1	Proportional range 1
0x3004	R/W	Float	dt	Derivative action time
0x3006	R/W	Float	rt	Integral action time
0x300C	R/W	Float	db	Dead band
0x3012	R/W	Word	tt	Controlling element running time
0x3016	R/W	Float	HYS1	Switch-on threshold
0x3018	R/W	Float	HYS2	Switch-off threshold down
0x301A	R/W	Float	HYS3	Switch-off threshold up
0x301C	R/W	Float	HYS4	Switch-on threshold (cooling)
0x301E	R/W	Float	HYS5	Switch-off threshold down (cooling)
0x3020	R/W	Float	HYS6	Switch-off threshold up (cooling)
0x3022	R/W	Float	**q**	Reaction threshold
0x3080	R/W	Float	At1	Outside temperature 1
0x3082	R/W	Float	Ht2	Boiler temperature 1
0x3084	R/W	Float	At2	Outside temperature 2
0x3086	R/W	Float	Ht2	Boiler temperature 2

Configuration level

Address	Access	Data type	Signal reference	Parameter
0x3426	R/W	Float	SCL1	Start of display input 1
0x3428	R/W	Float	SCH1	End of display input 1
0x3432	R/W	Float	SCL2	Start value input 2
0x3434	R/W	Float	SCH2	End value input 2
0x3486	R/W	Float	SPL	Start of setpoint limitation
0x3488	R/W	Float	SPH	End of setpoint limitation
0x342A	R/W	Float	OFFS1	Offset input E1
0x3436	R/W	Float	OFFS2	Offset input E2
0x343A	R/W	Float	OFFS3	Offset input E3
0x1063	R/W	Word	FnCt	Ramp function
0x1065	R/W	Float	rASL	Ramp slope
0x1067	R/W	Float	toLP	Tolerance band ramp
0x1069	R/W	Float	rAL	Limit value
0x1075	R/W	Float	dtt	Remote Detection Timer
0x1077	R/W	Float	dF1	Filter constant input 1
0x1079	R/W	Float	dF2	Filter constant input 2
0x107B	R/W	Float	dF3	Filter constant input 3
0x107D	R/O	Float	oLLo	Lower working range limit
0x107F	R/O	Float	oLHi	Upper working range limit
0x106D	R/W	Word	FnCt	Alarm relay function
0x106F	R/W	Float	AL	Alarm relay limit value (limit value alarm)
0x1071	R/W	Float	HYSt	Alarm relay hysteresis

Remote operation

Address	Access	Data type	Signal reference	Parameter
0x0500	R/W	Word	REM	Activation remote operation *
0x0501	R/W	Word	rOFF	Controller OFF in remote setpoint **
0x0502	R/W	Float	rHYS1	Switch-on threshold remote
0x0504	R/W	Float	rHYS2	Switch-off threshold down remote
0x0506	R/W	Float	rHYS3	Switch-off threshold up remote
0x0508	R/W	Float	SPr	Setpoint remote
0x050A	R/W	Word	RK1	Burner release remote operation
0x050B	R/W	Word	RK2	Relay K2 remote operation
0x050C	R/W	Word	RK3	Relay K3 remote operation
0x050D	R/W	Word	RK6	Relay K6 remote operation
0x050E	R/W	Word	rStEP	Step-by-step control remote operation
0x050F	R/W	Float	rY	Angular positioning output remote operation
0x0511	R/W	Float	rHYS4	Switch-on threshold remote (cooling)
0x0513	R/W	Float	rHYS5	Switch-off threshold down remote (cooling)
0x0515	R/W	Float	rHYS6	Switch-off threshold up remote (cooling)

Legend

* = Local

** = Controller OFF

Dati dell’apparecchio

Address	Access	Data type	Signal reference	Parameter
0x8000	R/O	Char12	---	Software version
0x8006	R/O	Char14	---	VdN number

Stato dell’apparecchio

Address	Access	Data type	Signal reference	Parameter
0x0200	R/O	Word	---	Outputs and states
			Bit 0	Output 1
			Bit 1	Output 3
			Bit 2	Output 2
			Bit 3	Output 4
			Bit 8	Hysteresis limitation
			Bit 9	Control system
			Bit 10	Self-optimization
			Bit 11	Second setpoint
			Bit 12	Measuring range overshoot InP1
			Bit 13	Measuring range overshoot InP2
			Bit 14	Measuring range overshoot InP3
			Bit 15	Calibration mode
0x0201	R/O	Word	---	Binary signals and hardware detection
			Bit 0	Operation mode 2-stage
			Bit 1	Manual mode
			Bit 2	Binary input D1
			Bit 3	Binary input D2
			Bit 4	Thermostat function
			Bit 5	First controller output
			Bit 6	Second controller output
			Bit 7	Alarm relay
			Bit 13	Analog output available
			Bit 14	Interface available

Electric connections :

With 7 pins connector version

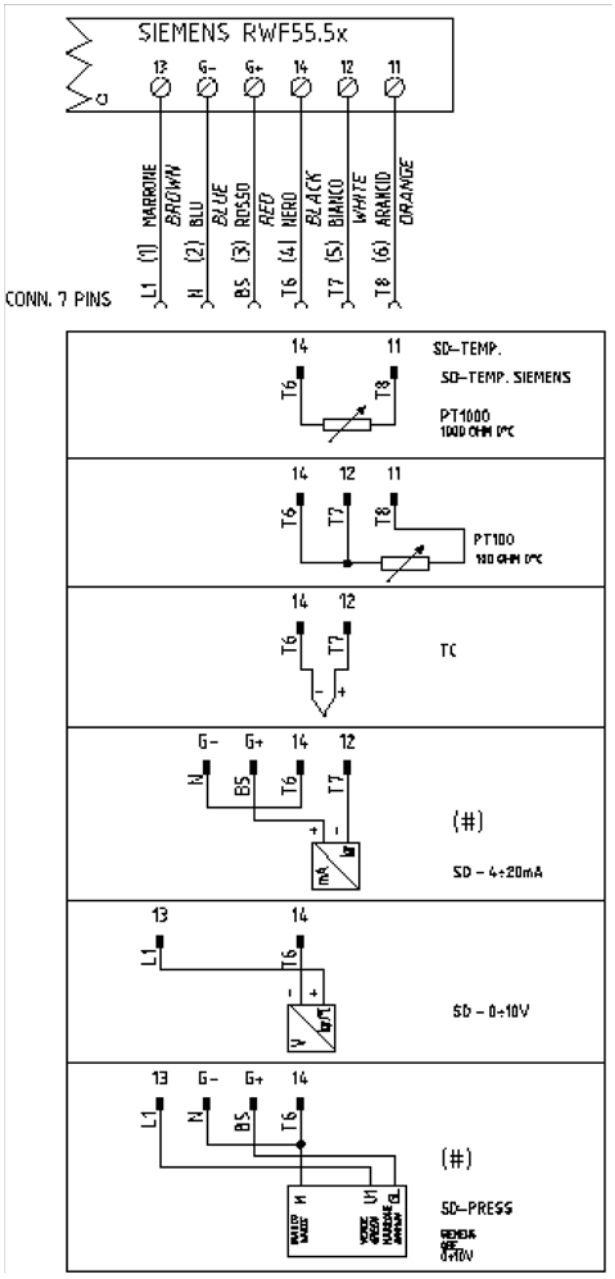

With terminals version

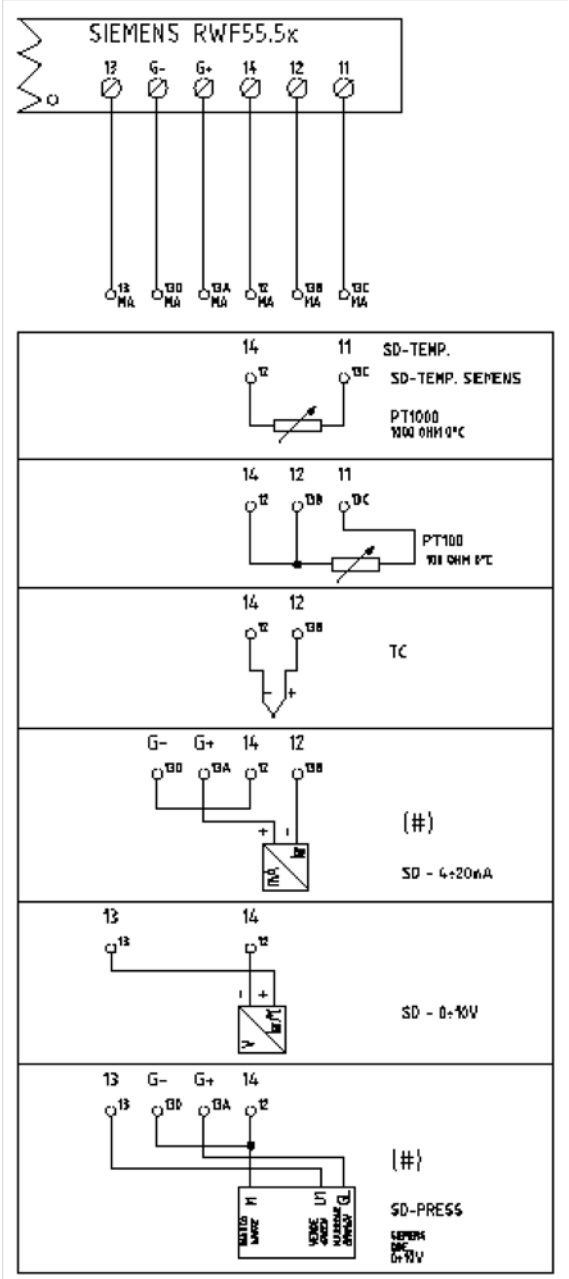

Corrispondences bornes entre RWF55.5x y RWF40.0x0Matches terminals betweenRWF55.5x and RWF40.0x0

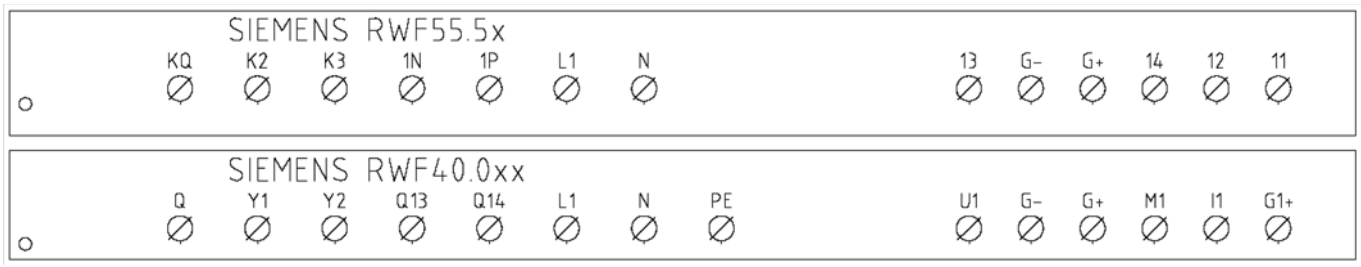

Parameters summarising for RWF55.xx :

Navigation menù	ConF					ConF			PArA						Opr
	Inp					Cntr		diSP							
	Inp1														
Types of probe	SEn1	OFF1	SCL	SCH	Unit	SPL	SPH	dECP	Pb. 1	dt	rt	tt	HYS1 (*)	HYS3 (*)	SP1 (*)
Siemens QAE2120…	6	0	needless	needless	1	30	95	1	10	80	350	(#)	-5	5	80 °C
Siemens QAM2120..	6	0	needless	needless	1	0	80	1	10	80	350	(#)	-2,5	2,5	40°C
Pt1000 (130°C max.)	4	0	needless	needless	1	30	95	1	10	80	350	(#)	-5	5	80°C
Pt1000 (350°C max.)	4	0	needless	needless	1	0	350	1	10	80	350	(#)	-5	10	80°C
Pt100 (130°C max.)	1	0	needless	needless	1	0	95	1	10	80	350	(#)	-5	5	80°C
Pt100 (350°C max)	1	0	needless	needless	1	0	350	1	10	80	350	(#)	-5	10	80°C
Probe4÷20mA / 0÷1,6bar	16	0	0	160	needless	0	160	0	5	20	80	(#)	0	20	100 kPa
Probe4÷20mA / 0÷3bar	16	0	0	300	needless	0	300	0	5	20	80	(#)	0	20	200 kPa
Probe 4÷20mA / 0÷10bar	16	0	0	1000	needless	0	1000	0	5	20	80	(#)	0	50	600 kPa
Probe 4÷20mA / 0÷16bar	16	0	0	1600	needless	0	1600	0	5	20	80	(#)	0	80	600 kPa
Probe 4÷20mA / 0÷25bar	16	0	0	2500	needless	0	2500	0	5	20	80	(#)	0	125	600 kPa
Probe 4÷20mA / 0÷40bar	16	0	0	4000	needless	0	4000	0	5	20	80	(#)	0	200	600 kPa
Probe 4÷20mA / 0÷60PSI	16	0	0	600	needless	0	600	0	5	20	80	(#)	0	30	300 (30PSI)
Probe4÷20mA / 0÷200PSI	16	0	0	2000	needless	0	2000	0	5	20	80	(#)	0	75	600 (60PSI)
Probe4÷20mA / 0÷300PSI	16	0	0	3000	needless	0	3000	0	5	20	80	(#)	0	120	600 (60PSI)
Siemens QBE2002 P4	17	0	0	400	needless	0	400	0	5	20	80	(#)	0	20	200 kPa
Siemens QBE2002 P10	17	0	0	1000	needless	0	1000	0	5	20	80	(#)	0	50	600 kPa
Siemens QBE2002 P16	17	0	0	1600	needless	0	1600	0	5	20	80	(#)	0	80	600 kPa
Siemens QBE2002 P25	17	0	0	2500	needless	0	2500	0	5	20	80	(#)	0	125	600 kPa
Siemens QBE2002 P40	17	0	0	4000	needless	0	4000	0	5	20	80	(#)	0	200	600 kPa
Signal 0÷10V	17	0	needless	needless	needless	needless	needless	needless	5	20	80	(#)			
Signal 4÷20mA	16	0	needless	needless	needless	needless	needless	needless	5	20	80	(#)			

NOTE:

(#) tt – servo control run time

SQL33 ; STM30; SQM10; SQM40; SQM50; SQM54 = 30 (secondi) - STA12B3.41; SQN30.251; SQN72.4A4A20 = 12 (secondi)

(*)These values are factory set - values must be set during operation at the plant based on the real working temperature/pressure value.

WARNING :

With pressure probes in bar the parameters SP1, SCH, SCL, HYS1, HYS3 must be set and displayed in kPa (kilo Pascal); 1bar = 100,000Pa = 100kPa.

With pressure probes in PSI the parameters SP1, SCH, SCL, HYS1, HYS3 must be set and displayed in PSI x10 (example: 150PSI > I display 1500).

APPENDIX: PROBES CONNECTION

To assure the utmost comfort, the control system needs reliable information, which can be obtained provided the sensors have been installed correctly. Sensors measure and transmit all variations encountered at their location.

Measurement is taken based on design features (time constant) and according to specific operating conditions.With wiring run in raceways, the sheath (or pipe) containing the wires must be plugged at the sensor's terminal board so that currents of air cannot affect the sensor's measurements.

Ambient probes (or ambient thermostats)

Installation

The sensors (or room thermostats) must be located in reference rooms in a position where they can take real temperature measure-ments without being affected by foreign factors.

It's good to be admired …even better to be effective

Heating systems: the room sensor must not be installed in rooms with heating units complete with thermostatic valves. Avoid all sources of heat foreign to the system.

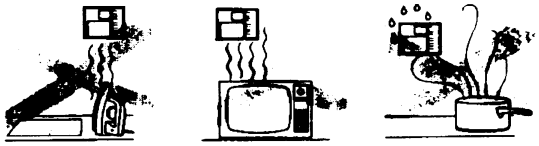

Location

On an inner wall on the other side of the room to heating unitsheight above floor 1.5 m, at least 1.5 m away from external sources of heat (or cold).

.

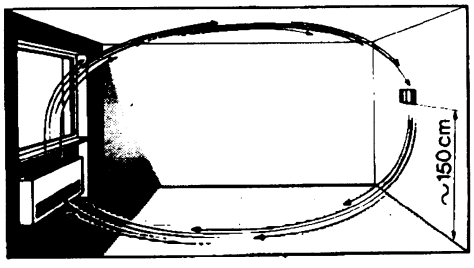

Installation position to be avoided

near shelving or alcoves and recesses, near doors or win-dows, inside outer walls exposed to solar radiation or currents of cold air, on inner walls with heating system pipes, domestic hot water pipes, or cooling system pipes running through them.

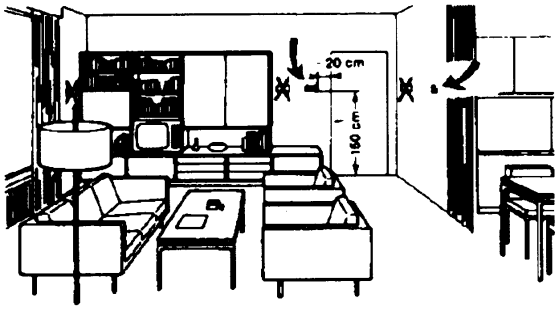

Outside probes (weather)Installation

In heating or air-conditioning systems featuring adjustment in response to outside temperature, the sensor's positioning is of paramount importance.

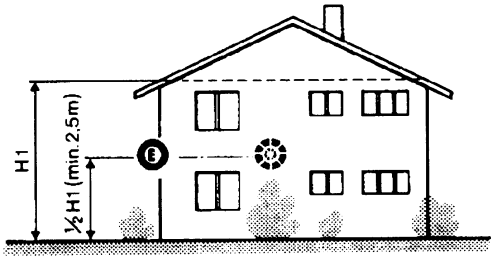

General rule: en on the outer wall of the building where the living rooms are, never on the south-facing wall or in a position where they will be affected by morning sun. If in any doubt, place them on the north or north-east façade.

Positions to be avoidedH

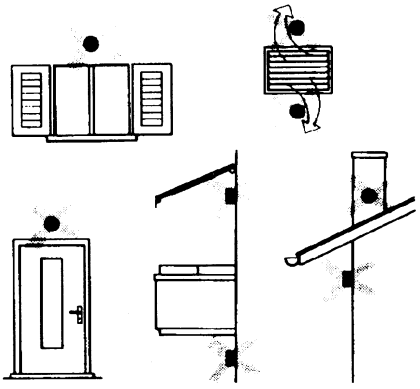

Avoid installing near windows, vents, outside the boiler room, on chimney breasts or where they are protected by balconies, cantilever roofs .

The sensor must not be painted (measurement error) .

Duct or pipe sensors

Installing temperature sensors

For measuring outlet air:

"after delivery fan or

"after coil to be controlled, at a distance of at least 0,5 m

For measuring room temperature:

"before return air intake fan and near room's return airintake.

For measuring saturation temperature: after mist eliminator.

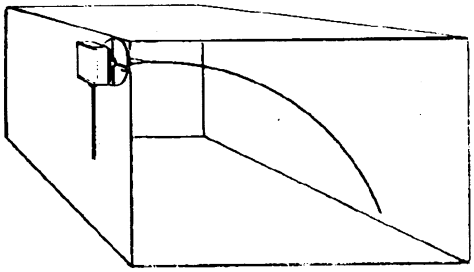

Bend 0.4m sensor by hand (never use tools) as illustrated .

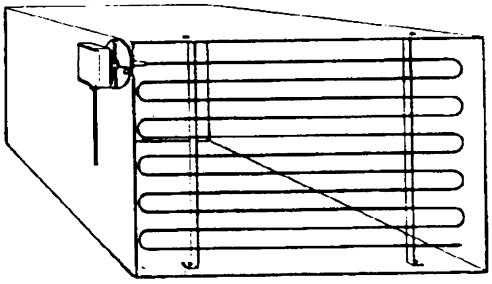

Use whole cross-section of duct, min. distance from walls 50 mm, radius of curvature 10 mm for 2m or 6m sensors

Installing combined humidity sensors

As max. humidity limit sensor on outlet (steam humidifiers) .

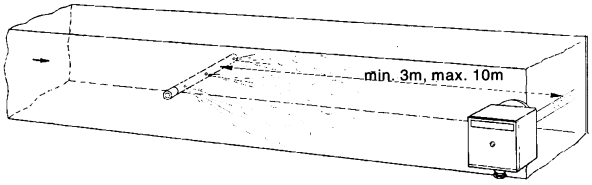

Installing pressure sensors

A - installation on ducts carrying fluids at max. temperature 80°C

B - installation on ducts at temperature over 80°C and for refrigerants

C - installation on ducts at high temperatures :

·"increase length of siphon

"place sensor at side to prevent it being hit by hot air coming from the pipe.

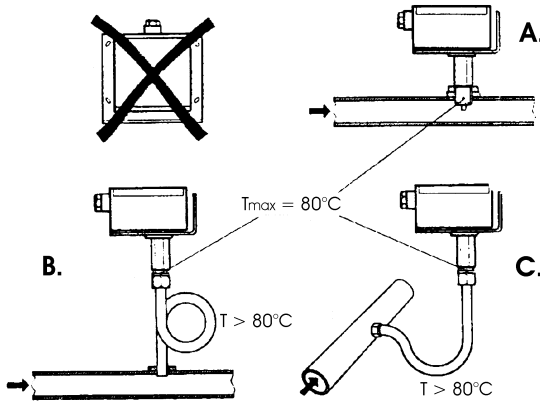

Installing differential pressure sensors for water

Installation with casing facing down not allowed.

With temperature over 80°C, siphons are needed.

To avoid damaging the sensor, you must comply with the following instructions :

when installing: make sure pressure difference is not greater than the value permitted by the sensor

when there are high static pressures, make sure you insert shutoff valves A-B-C.

Putting into operation

Start disable

1=open C1=open C

2=open A2=close B

3=open B3=close A

4= close C

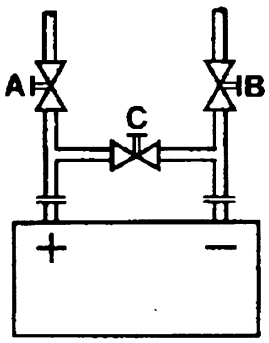

Immersion or strap-on sensors

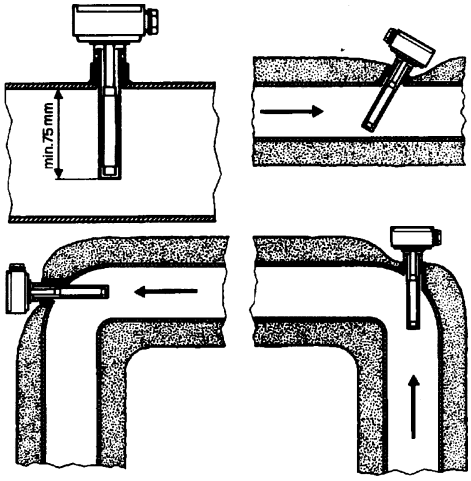

Immersion probes installation

Sensors must be installed on the stretch of pipe in which fluid circulates all the time.

The rigid stem (sensing element doing the measuring) must be inserted by at least 75mm and must face the direction of flow.

Recommended locations: on a bend or on a straight stretch of pipe but tilted by 45° and against the flow of fluid.

Protect them to prevent water from infiltrating (dripping gates, condensation from pipes etc.) .

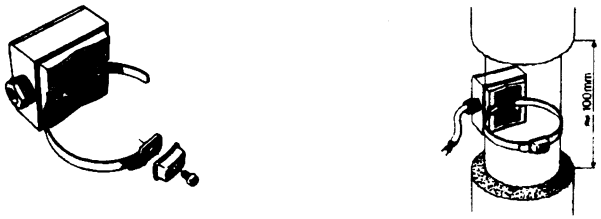

Installing QAD2.. strap-on sensors

Make sure fluid is circulating in the chosen location.

Eliminate insulation and paintwork (including rust inhibitor) on a min. 100mm length of pipe.

Sensors come with straps for pipes up to 100 mm in diameter .

Placing the probes (QAD22.../QAE21.../QAP21.../RCA...)

With pumps on outlet

with 3 ways valves / with 4 ways valves

Panel system / burner control

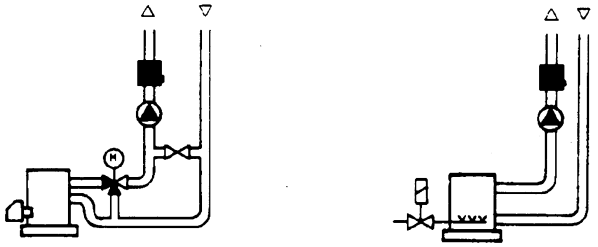

With pumps on return

with 3 ways valves / with 4 ways valves

Strap-on or immersion sensors?

QAD2.. strap-on sensors

Advantages :

- 10 sec. time constant
- Installed with system running (no plumbing work)
- Installation can be changed easily if it proves incorrect

ΠLimits:

- Suitable for pipe diameters max. 100 mm
- Can be affected by currents of air etc.

QAE2... immersion sensors

Advantages:

- Measure "mean" fluid temperature
- No external influence on measurement such as: currents of air, nearby pipes etc.

Limits:

- Time constant with sheath: 20 sec.
- Hard to change installation position if it proves incorrect

Installing differential pressure probes for air

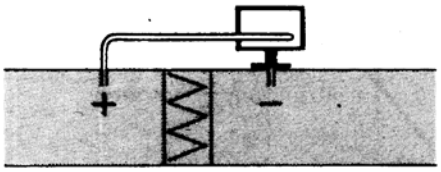

A - Control a filter (clogging)

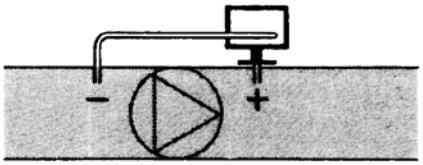

B - Control a fan (upstream/downstream)

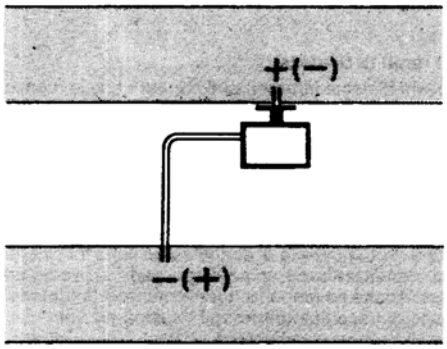

C - Measurement of difference in pressure between two ducts

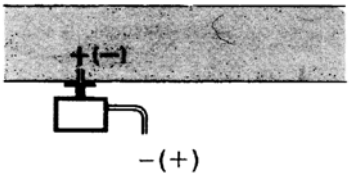

D - Measurement of difference in pressure between two rooms or of inside of duct and outside

Basic principles

Measuring static pressure(i.e. pressure exerted by air on pipe walls)

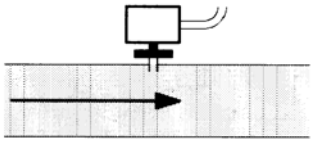

Measuring dinamic pressure

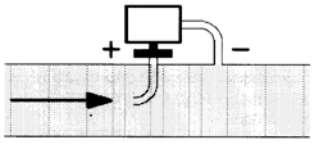

$$Pd = \frac{y\,\vartheta^2}{2g}$$

Legend

y	Kg/m3, specific weight of air
q	m/s, air speed
g	9.81 m/s2 gravity acceleration
Pd	mm C.A., dynamic pressure

Measuring total pressure

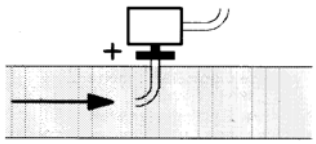

Note: Specifications and data subject to change. Errors and omissions excepted.

MANUALE USER SUPPORT

MULTI-THERMOSTAT

MCX06C

MCX06C is a multi-thermostat with four 100k NTC inputs. It can control up to 4 temperatures showing them (not more than 2 at the same time) on a couple of displays.
It is used to check and adjust oil heater temperatures. it works as follows:
as soon as the burner control gives the GO to the digital 1 input (terminals DI1-COM), the adjustment program runs (the relevant LED is ON). Reading the outlet temperature through the probe **Pb3** (terminals AI3-COM), a PID signal is produced. This signal becomes the set-point for the electric resistors. The electric resistors temperature is read through the probe **Pb1** (terminals AI1-COM) so that a second PID signal is produced. This second PID drives a couple of SCR by means of 0-10 V impulses in order to control the electric resistors temperature.
When the burner is in stand-by, resistor set-point is kept at the temperature set in parameter "**p30**" (see parameter group **REG**).
Probe **Pb4** (terminals AI4-COM) controls the inner heater temperature. As soon the relevant set-point is got, it drives the output number 4 (terminals C4-NO4) linked to the relais KTCN. This allows the oil pump to start and also the burner control proceeds with its cycle.
When set-point **trS** is got to, output number 5 is ON (terminals C5-NO5) linked to the relais KTRS. It switches the resistors off and activates an alarm on the device.
Probe **Pb2** (terminals AI2-COM), when fitted, drives output number 2 (terminals C2-NO2) linked to the relais KTCI. This allows the burner control to proceed with ignition.
See below the set-point recommended figures.

User interface:

Device:

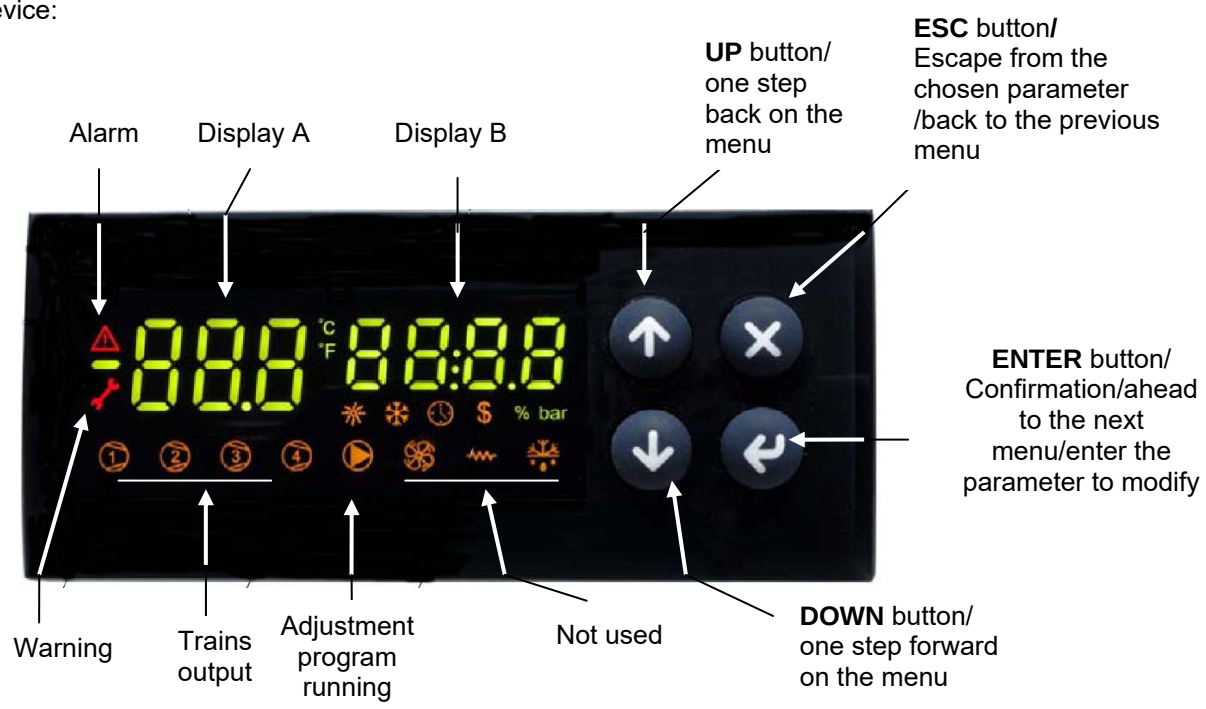

Note :
In normal operation, the display A shows the oil tank resistor temperature (probe Pb1).
In normal operation, the display B shows the oil output temperature (probe Pb3).

Connections from terminal side :

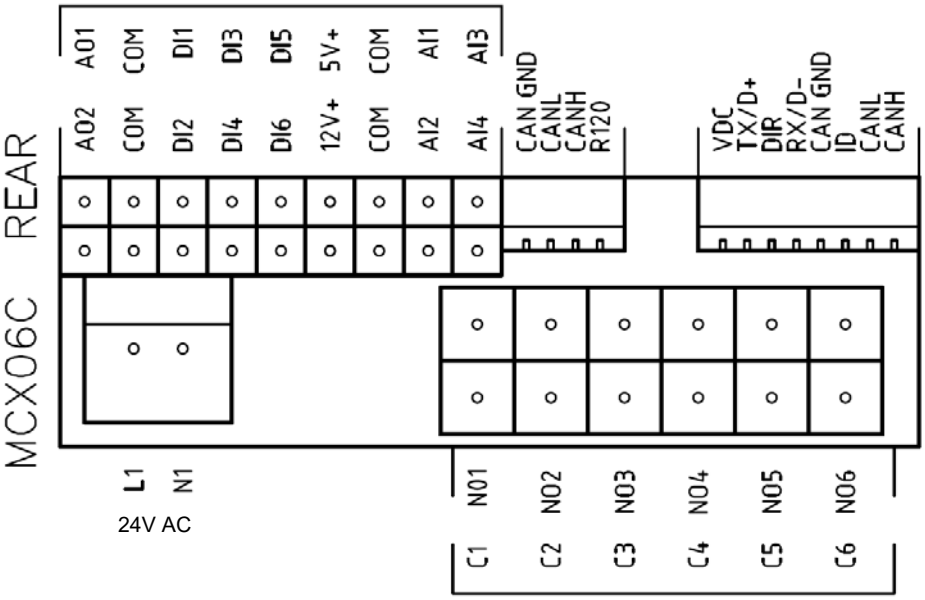

Probe connection:

input **AI1** = probe **Pb1** = set-point "**tr**" = oil heater temperature probe;
input **AI2** = probe **Pb2** = set-point "**tCI**" = plant consent temperature probe (when installed);
input **AI3** = probe **Pb3** = set-point "**OIL**" = oil heater output temperature probe (PID regulation);
input **AI4** = probe **Pb4** = set-point "**tcn**" = oil heater consent temperature probe.

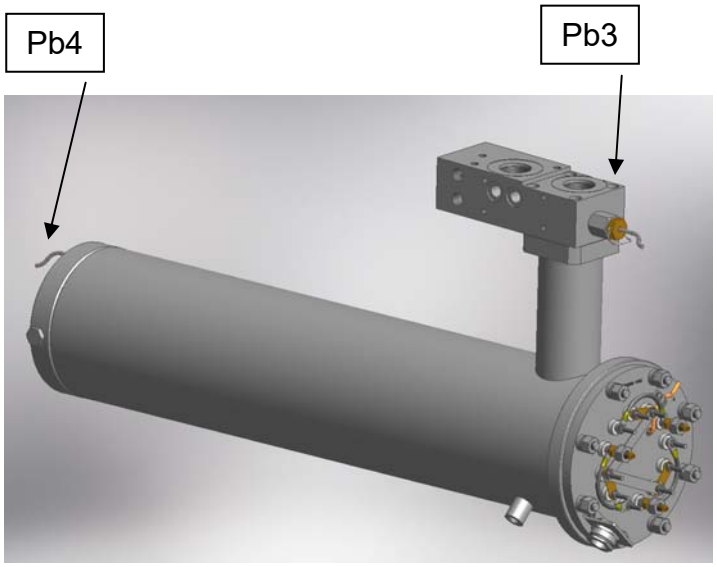

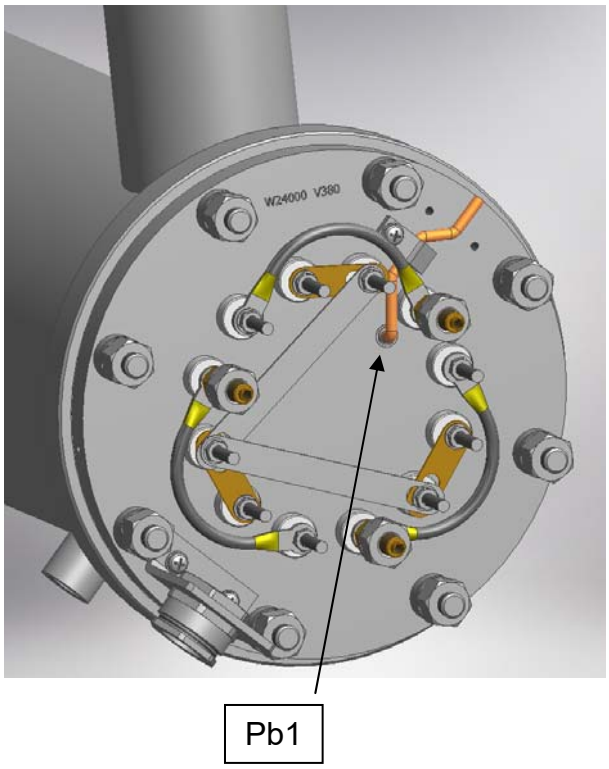

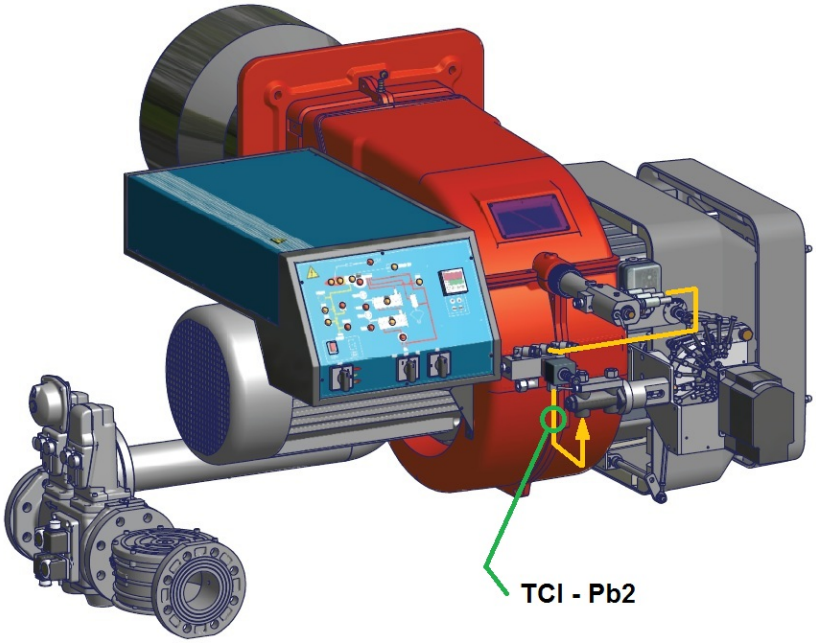

(**tCI - Pb2** probe only for mechanical atomizing burners)

Menu :
To enter the menu below, keep pushing **ENTER** for more than 3 s.

Menu code	Sub-menu code	Function	Notes
Prb		Probes values	You can see in sequence the 4 probe values (UP and DOWN keys): the probe code is on display A (Pb1,..., Pb4) and the probe value is on display B (not fitted or out of work probes show "----").
Log		Login	It defines the access level to menu and parameters (password)
	PAS	Password	Password input
Par		Parameters menu	Access to parameters (you have to login first)
	CnF	Configuration menu	Parameter configuration
	rEG	Regulation menu	Set to set-point, probe, thresholds etc.
ALA		Alarm menu	Access to alarm management
	Act	Active alarms	Show the active alarms
	rES	Reset alarms	Reset of the manual reset alarms
Loc		Lock/Unlock functions	Not used
InF	rEL	Software version	Installed software version
tUN		Autotuning	Activation On, deactivation ESC PID parameter autotuning

Login:
All the parameters inside the **Par** menu are locked by a password.
Without password, only set-points can be modified.
To login, on the log menu, press **ENTER** for more than 3 s. Input your password (level 2 or 3) inside **PAS**
With password for level 3 all the data can be set.

submenu **CnF - configuration parameters group :**

Menu	Parameter	Description	Additional description	Min	Max	Default	U.M.	Visibility condition	Password level	Modbus index
CnF		**CONFIGURATION**							0	
AI1		Analog Input 1							1	
	A1P	Probe 1 Presence	This parameter enables or disables the probe	0	1	1			2	1
	A1C	Calibration Probe 1	Don't modify it	-20,0	20,0	0,0	°C	A1P >0	3	2
AI2		Analog Input 2							1	
	A2P	Probe 2 Presence	This parameter enables or disables the probe	0	1	1			2	3
	A2C	Calibration Probe 2	Don't modify it	-20,0	20,0	0,0	°C	A2P >0	3	4
AI3		Analog Input 3							1	
	A3P	Probe 3 Presence	This parameter enables or disables the probe	0	4	1			2	5
	A3L	Min. Value conversion AI3	Don't modify it	-999,9	999,9	0,0		A3P >2	3	6
	A3H	Max. Value conversion AI3	Don't modify it	-999,9	999,9	30,0		A3P >2	3	7
	A3C	Calibration Probe 3	Don't modify it	-20,0	20,0	0,0	°C	A3P >0	3	8
AI4		Analog Input 4							1	
	A4P	Probe 4 Presence	This parameter enables or disables the probe	0	4	1			2	9
	A4L	Min. Value conversion AI4	Don't modify it	-999,9	999,9	0,0		A4P >2	3	10
	A4H	Max. Value conversion AI4	Don't modify it	-999,9	999,9	30,0		A4P >2	3	11
	A4C	Calibration Probe 4	Don't modify it	-20,0	20,0	0,0	°C	A4P >0	3	12
dI		Digital input							1	
	dI1	Input 1 polarity (Pump)	Change type of digital input (NC o NO)	0	1	1			3	13
	dI2	Alarm polarity from input 2	Change type of digital input (NC o NO)	0	2	2			2	14
	dI3	Alarm polarity from input 3	Change type of digital input (NC o NO)	0	2	2			2	15
	dI4	Alarm polarity from input 4	Change type of digital input (NC o NO)	0	2	2			2	16
	dI5	Alarm polarity from input 5	Change type of digital input (NC o NO)	0	2	2			2	17
	dI6	Alarm polarity from input 6	Change type of digital input (NC o NO)	0	2	2			2	18
dI		Digital output Alarm and Warning							1	
	dO5	Polarity output Warning	Change type of digital input (NC o NO)	0	1	0			3	19
	dO6	Polarity output Alarm	Change type of digital input (NC o NO)	0	1	0			3	20
SIC		Safety probe							1	
	SIp	Selection of safety probe	Probe which also activates the relay Warning (ns. KTRS)	0	4	4			3	21
SyS		Syistem							0	
	dSA	display A output	Probe temperature or set-point to be displayed in the left display	0	8	1			3	22
	dSb	display B output	Probe temperature or set-point to be displayed in the right display	0	8	3			3	23
PAS		Password							1	
	PL1	Password level 1		0	9999	0			1	32
	PL2	Password level 2		0	9999				2	33
	PL3	Password level 3		0	9999				3	34

Menu	Parameter	Description	Additional description	Min	Max	Default	U.M.	Visibility condition	Level	Modbus index
tUN		Autotuning							3	
	tU1	Output temperature hysteresis	Don't modify it	0	50,0	0,5	°C		3	35
	tU2	Startup number	Don't modify it	0	5	2			3	36
	tU3	Measurement cycles number	Don't modify it	1	4	2			3	37
	tU4	Max. differential command exit	Don't modify it	0,01	10,00	10,00	V		3	38
	tU5	Differential reduction exit command (%)	Don't modify it	0	100	15			3	39
	tU6	Calculating mode: 0= Symmetrical; 1=Asymmetrical; 2=Simple	Don't modify it	0	2	2			3	40
	tU7	Enabling	Don't modify it	0	1	1			3	41

Submenu **REG – regulation parameters group :**

Menu	Parameter	Description	Additional description	Min	Max	Default	U.M.	Visibility condition	Level	Modbus index
REG		**REGULATION**							0	
Pb1		Probe 1							0	
	rES	Set-point Probe 1 (Tank resistor)	Don't modify it	-50,0	200,0	0,0	°C		3	42
	AL1	Probe 1 - Low Temperature Alarm Threshold	Don't modify it	-50,0	200,0	-50,0	°C		3	43
	AH1	Probe 1 - High Temperature Alarm Threshold	Don't modify it	-50,0	200,0	200,0	°C		3	44
	d01	Probe 1 differential		0,0	20,0	3,0	°C		3	45
Pb2		Probe 2							0	
	tCI	Set-point Probe 2 (Plant Consent)	Plant consent according to table "**Set point adjustment**"	-50,0	200,0	120,0	°C		0	46
	AL2	Probe 2 - Low Temperature Alarm Threshold	Don't modify it	-50,0	200,0	-50,0	°C		2	47
	AH2	Probe 2 - High Temperature Alarm Threshold	Don't modify it	-50,0	200,0	200,0	°C		2	48
	d02	Probe 2 differential		0,0	20,0	3,0	°C		2	49
Pb3		Probe 3							0	
	rE3	Type of regulation of probe 3 (Oil tank exit)	Type of regulation 0= thermostat; 1= PID (don't modify)	0	1	1			3	50
	OIL	Set-point Probe 3 (Oil tank exit)	Nozzle oil temperature according to the table "**Set point adjustment**"	-50,0	200,0	130,0	°C		0	51
	AL3	Probe 3 - Low Temperature Alarm Threshold (Oil tank exit)	Don't modify it	-50,0	200,0	-50,0	°C		2	52
	AH3	Probe 3 - High Temperature Alarm Threshold (Oil tank exit)	Don't modify it	-50,0	200,0	200,0	°C		2	53
	Pb3	Proportional band for PID Probe 3 (Oil tank exit)	Proportional band for first PID regulation	0,0	200,0	60,0			3	54
	db3	Dead Zone for PID Probe 3 (Oil tank exit)	Dead zone for first PID regulation	0,0	20,0	0,0	°C	rE3 =1	3	55
	rt3	Integral Time (Ti) for PID Probe 3 (Oil tank exit)	Integral time for first PID regulation	0,0	1000,0	120,0	s	rE3 =1	3	56
	dt3	DerivativeTime (Td) for PID Probe 3 (Oil tank exit)	Derivative time for first PID regulation (~ ¼ di rt3)	0,0	300,0	30,0	s	rE3 =1	3	57
	db3	Dead Zone for PID Probe 3 (Oil tank exit)	Dead zone for first PID regulation	0,0	20,0	0,0	°C	rE3 =1	3	55

Menu	Parameter	Description	Additional description	Min	Max	Default	U.M.	Visibility condition	Level	Modbus index
	pi1	Overshooting for Integral action (Oil tank exit)	Don't modify it	100	1000	200		rE3 =1	3	58
	pi2	Derivative action enabling (Oil tank exit)	Don't modify it	0	1	1		rE3 =1	3	59
	pi3	Filtering factor for derivative action (Oil tank exit)	Don't modify it	1	100	20		rE3 =1	3	60
	pi4	Duty cicle PWM for output DO3 and/or AO1 (0-10V)	Don't modify it	1	300	5	s	rE3 =1	3	61
	SL3	Output selection DO3 and/or AO1 (0-10V)	Digital selection output for control thyristors; Don't modify it	0	2	AO1			3	62
	p21	Proportional band for PID Probe 1 (Tank resistor)	Proportional band for second PID regulation	0,0	200,0	50,0		rE3 =1	3	63
	p22	Dead Zone for PID Probe 1 (Tank resistor)	Dead zone for second PID regulation	0,0	20,0	0,0	°C	rE3 =1	3	64
	p23	Integral Time (Ti) for PID Probe 1 (Tank resistor)	Integral time for second PID regulation	0,0	1000,0	110,0	s	rE3 =1	3	65
	p24	DerivativeTime (Td) for PID Probe 1 (Tank resistor)	Derivative time for second PID regulation	0,0	300,0	23,0	s	rE3 =1	3	66
	p25	Overshooting for Integral action (Tank resistor)	Don't modify it	100	1000	200		rE3 =1	3	67
	p26	Derivative action enabling (Tank resistor)	Don't modify it	0	1	1		rE3 =1	3	68
	p27	Filtering factor for derivative action (Tank resistor)	Don't modify it	1	100	20		rE3 =1	3	69
	p28	Min Output PID Probe 3 (Oil tank exit)	Minimum value tank resistor set-point (delta of 100°C above p29)	0,0	1000,0	80,0	°C	rE3 =1	3	70
	p29	Max Output PID Probe 3 (Oil tank exit)	Maximum valuetank resistor set-point	0,0	1000,0	180,0	°C	rE3 =1	3	71
	SP0	Set-point Tank Resistor with oil pump stops (stand by)	Set-point of maintaining resistance during stand by "**Set point adjustment**"	-50,0	200,0	140,0	°C	rE3 =1	0	72
Pb4		Probe 4							0	
	tcn	Setpoint Probe 4 (Oil consent)	Oil consent according table "**Set point adjustment**"	-50,0	200,0	110,0	°C		0	73
	AL4	Low Threshold Probe 4		-50,0	200,0	-50,0	°C		2	74
	trS	Probe 4 - High Temperature Alarm Threshold (Safety Thermostat)	Tank resistor safety temperature according table "**Set point adjustment**"	-50,0	200,0	190,0	°C		0	75
	d04	Probe 4 differential		0,0	20,0	3,0	°C		2	76

Alarms & Warning:
When the red triangle on the top left lights, one or more alarms are activated.
When the red key on the left lights, the output N05-C5 is active and the relay **KTRS** switches the resistors OFF.
Check the reason, correct the failure and, as soon as the temperature is lower than **trS**, reset it through **ALA**/**rES .**
In order to show active alarms and warnings, select the relevant menu through **ALA**/**Act**.and, using the **UP** and **DOWN** buttons, scroll the lines.
In order to perform the manual reset, select **ALA**/**rES**.

Code	Description	Sourse	Active simbol	Reset type
trS	High temperature resistors alarm	probe Pb4 > value trS	red key	Manual
EP1	Probe Pb1 fault	Probe Pb1 fault	red triangle	Automatic
EP2	Probe Pb2 fault	Probe Pb2 fault	red triangle	Automatic
EP3	Probe Pb3 fault	Probe Pb3 fault	red triangle	Automatic
EP4	Probe Pb4 fault	Probe Pb4 fault	red triangle	Automatic

Set point adjustment:

All the parameters inside the **Par** menu are locked by a password. The user can modify only set points, without using any passwords.
The oil viscosity at the nozzle, should be about 1,5°E, which guarantees correct and safe functioning of the burner.
The temperature values in the table, guarantee the respect of that parameter and are valid when the pre heating tank is installed on the burner. For different configurations , please refer to the chapter "Recommendations to design heavy oil feeding plants" on the burner manual
Here below recommended set points:

Menu path				Oil viscosity at 50 °C according to the letter shown in the burner model				
				P	**N**	**E**	**D**	**H**
				89 cSt	< 50 cSt	> 50 cSt < 110 cSt	> 110 cSt < 400 cSt	> 400 cSt < 4000 cSt
				12 °E	< 7°E	> 7 °E < 15 °E	> 15 °E < 50 °E	> 50 °E < 530 °E
Par								
rEG	Pb1	tr	Oil heater temperature probe	parameter not visible				
	Pb2	tCI	Plant consent temperature probe (when installed)	20 °C	70 °C	70 °C	70 °C	---
	Pb3	Oil	oil heater output temperature probe (PID regulation);	60-70 °C	110-120 °C	120-130 °C	130-140 °C	140-150 °C
		SP0	Set-point oil heater with oil pump stopped (stand-by)	45 °C	120 °C	130 °C	140 °C	150 °C
	Pb4	tcn	Oil heater consent temperature probe	40 °C	100 °C	100 °C	110 °C	120 °C
		trS	Safety temperature tank resistors (manual reset)	120 °C	190-200 °C	190-200 °C	190-200 °C	190-200 °C

The above temperature values are suggested and refer to a plant designed according to the prescriptions in the burner user manual.
The suggested values can change in reference to the fuel oil specifications.

USER MANUAL OF MULTI-THERMOSTAT

MCX06C

MCX06C is a multi-thermostat with four 100k NTC inputs. It can control up to 4 temperatures showing them (not more than 2 at the same time) on a couple of displays.
It is used to check and adjust oil heater temperatures.

User interface:
Device:

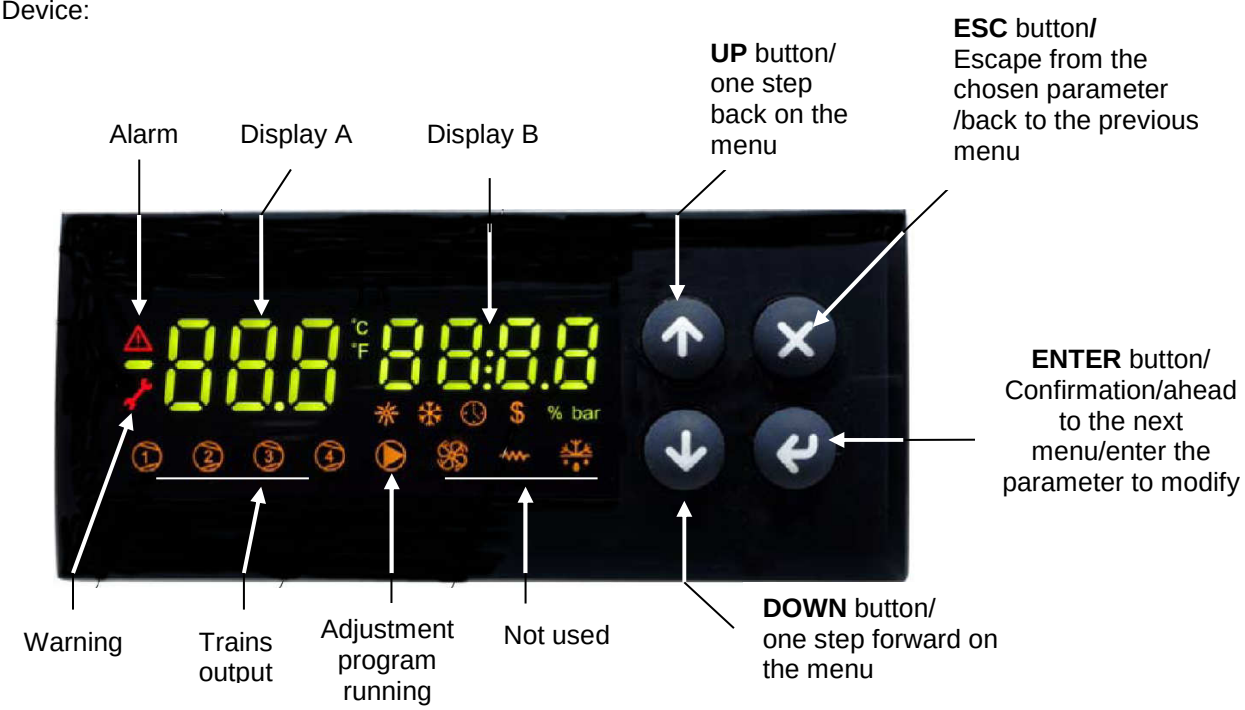

Note :
In normal operation, the display A shows the oil tank resistor temperature (probe Pb1).
In normal operation, the display B shows the oil output temperature (probe Pb3).

Connections from terminal side:

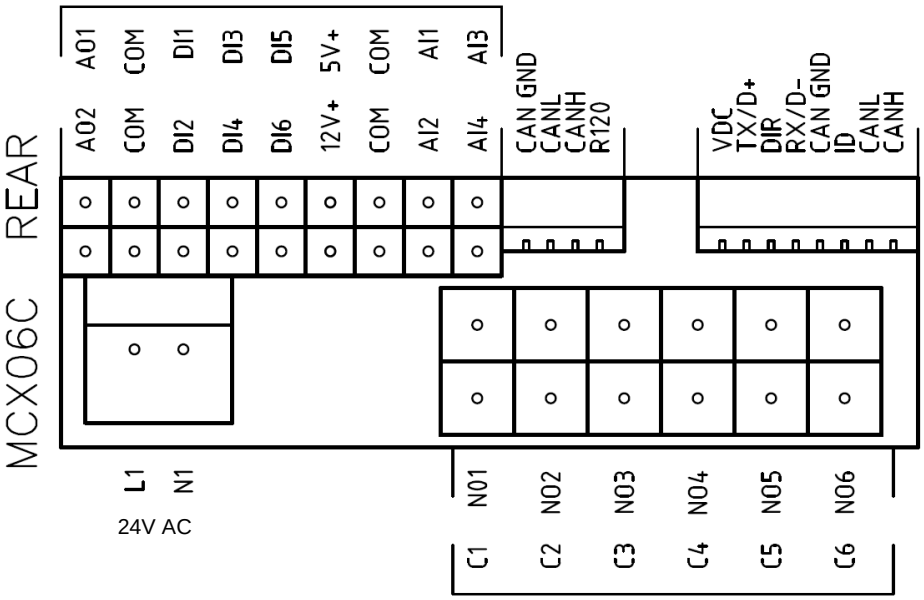

Probe connection:
input **AI1** = probe **Pb1** = set-point "**tr**" = oil heater temperature probe;
input **AI2** = probe **Pb2** = set-point "**tCI**" = plant consent temperature probe (when installed);
input **AI3** = probe **Pb3** = set-point "**OIL**" = oil heater output temperature probe (PID regulation);
input **AI4** = probe **Pb4** = set-point "**tcn**" = oil heater consent temperature probe.

Menu:
To enter the menu below, keep pushing **ENTER** for more than 3 s.

Menu code	Sub-menu code	Function	Notes
Prb		Probes values	You can see in sequence the 4 probe values (UP and DOWN keys): the probe code is on display A (Pb1,..., Pb4) and the probe value is on display B (not fitted or out of work probes show "----").
Log		Login	It defines the access level to menu and parameters (password)
	PAS	Password	Password input
Par		Parameters menu	Access to parameters (you have to login first)
	CnF	Configuration menu	Parameter configuration
	rEG	Regulation menu	Set to set-point, probe, thresholds etc.
ALA		Alarm menu	Access to alarm management
	Act	Active alarms	Show the active alarms
	rES	Reset alarms & Warning	Reset of the manual reset alarms and warning
Loc		Lock/Unlock functions	Not used
InF	rEL	Software version	Installed software version
tUN		Autotuning	Activation On, deactivation ESC PID parameter autotuning

Alarms & Warning:
When the red triangle on the top left lights, one or more alarms are activated.
When the red key on the left lights, the output N05-C5 is active and the relay **KTRS** switches the resistors OFF.
Check the reason, correct the failure and, as soon as the temperature is lower than **trS**, reset it through **ALA**/**rES .**
In order to show active alarms and warnings, select the relevant menu through **ALA**/**Act**.and, using the **UP** and **DOWN** buttons, scroll the lines.
In order to perform the manual reset, select **ALA**/**rES**.

Code	Description	Sourse	Active simbol	Reset type
trS	High temperature resistors alarm	probe Pb4 > value trS	red key	Manual
EP1	Probe Pb1 fault	Probe Pb1 fault	red triangle	Automatic
EP2	Probe Pb2 fault	Probe Pb2 fault	red triangle	Automatic
EP3	Probe Pb3 fault	Probe Pb3 fault	red triangle	Automatic
EP4	Probe Pb4 fault	Probe Pb4 fault	red triangle	Automatic

Set point adjustment:
All the parameters inside the **Par** menu are locked by a password.
The user can modify only set points (menu **rEG**), without using any passwords.
The oil viscosity at the nozzle, should be about 1,5°E, which guarantees correct and safe functioning of the burner.
The temperature values in the table, guarantee the respect of that parameter and are valid when the pre heating tank is installed on the burner. For different configurations , please refer to the chapter "Recommendations to design heavy oil feeding plants" in the burner manual.
Here below recommended set points:

Menu path				Oil viscosity at 50 °C according to the letter show n in the burner model				
				P	**N**	**E**	**D**	**H**
				89 cSt	< 50 cSt	> 50 cSt < 110 cSt	> 110 cSt < 400 cSt	> 400 cSt < 4000 cSt
				12 °E	< 7°E	> 7 °E < 15 °E	> 15 °E < 50 °E	> 50 °E < 530 °E
Par								
rEG	Pb1	tr	Oil heater temperature probe	parameter not visible				
	Pb2	tCI	Plant consent temperature probe (when installed)	20 °C	70 °C	70 °C	70 °C	---
	Pb3	Oil	oil heater output temperature probe (PID regulation);	60-70 °C	110-120 °C	120-130 °C	130-140 °C	140-150 ° C
		SP0	Set-point oil heater with oil pump stopped (stand-by)	45 °C	120 °C	130 °C	140 °C	150 °C
	Pb4	tcn	Oil heater consent temperature probe	40 °C	100 °C	100 °C	110 °C	120 °C
		trS	Safety temperature tank resistors (manual reset)	120 °C	190-200 °C	190-200 °C	190-200 °C	190-200 °C

The above temperature values are suggested and refer to a plant designed according to the prescriptions in the burner user manual. The suggested values can change in reference to the fuel oil specifications.

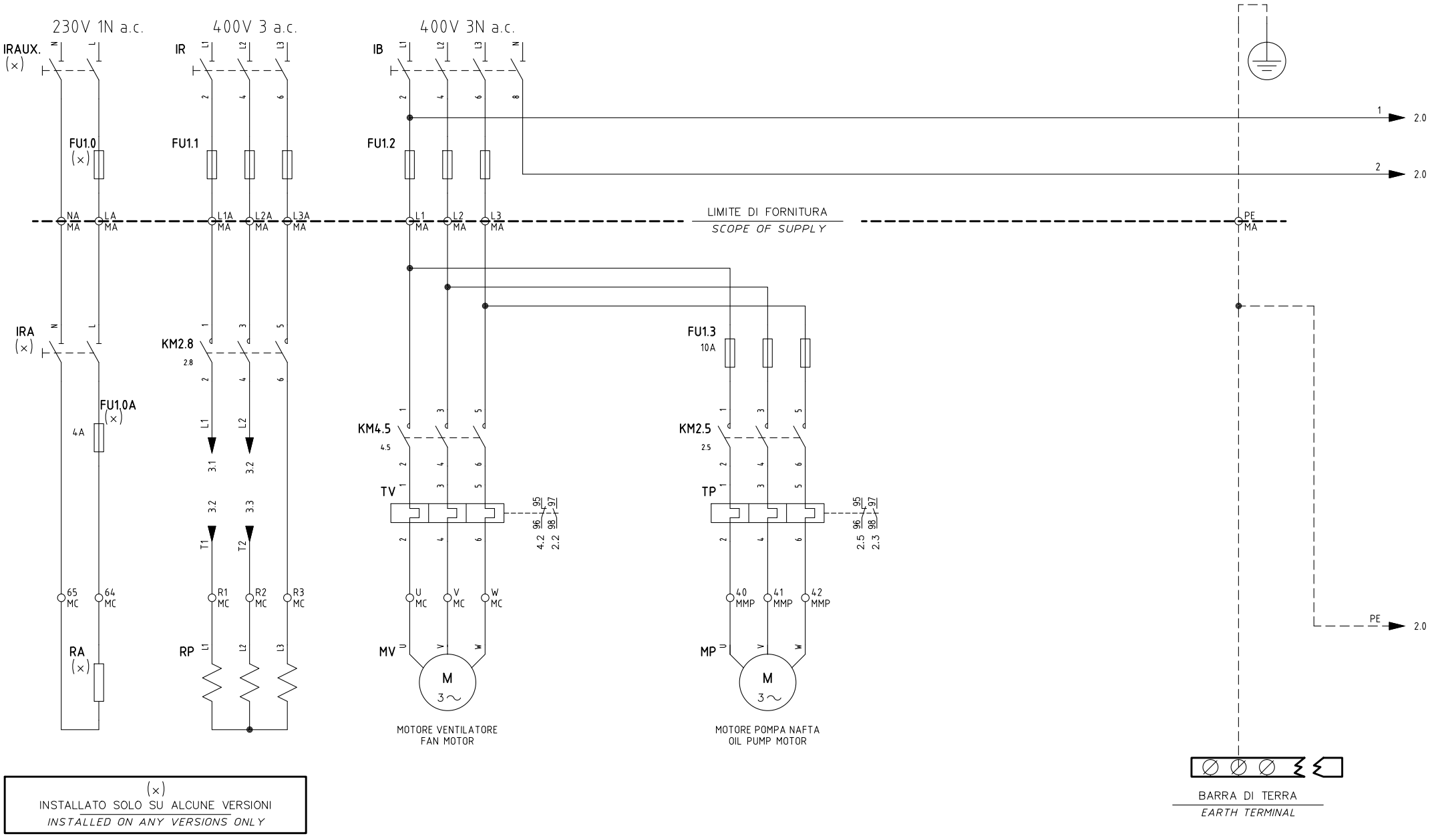

(×)
INSTALLATO SOLO SU ALCUNE VERSIONI
INSTALLED ON ANY VERSIONS ONLY

REV.	MODIFICA	DATA	FIRME
03	CONTACT KA4.5 ADDED	02/10/14	U. PINTON
02	AGGIUNTO/ADDED "PGCP"	11/03/14	U. PINTON
01	MODFIED "MCX06C" CONNECTION	01/02/13	U. PINTON

UNIGAS

Impianto
TIPI/TYPES KPBY60 ÷ KPBY520 /KRBY90 ÷ KRBY520
MODELLO/MODEL MH.PR.A.x.xx.EC

Descrizione
LMV26.300 & AGM60.1A9 + MCX06C + PGCP

Ordine

Commessa

Esecutore
U. PINTON

Data Controllato
02/10/2014

Controllato
E. CAVALLI

Data 20/12/2012
Revisione 03
Dis. N. 05 – 0978

PREC. /
FOGLIO 1
SEGUE 2
TOTALE 14

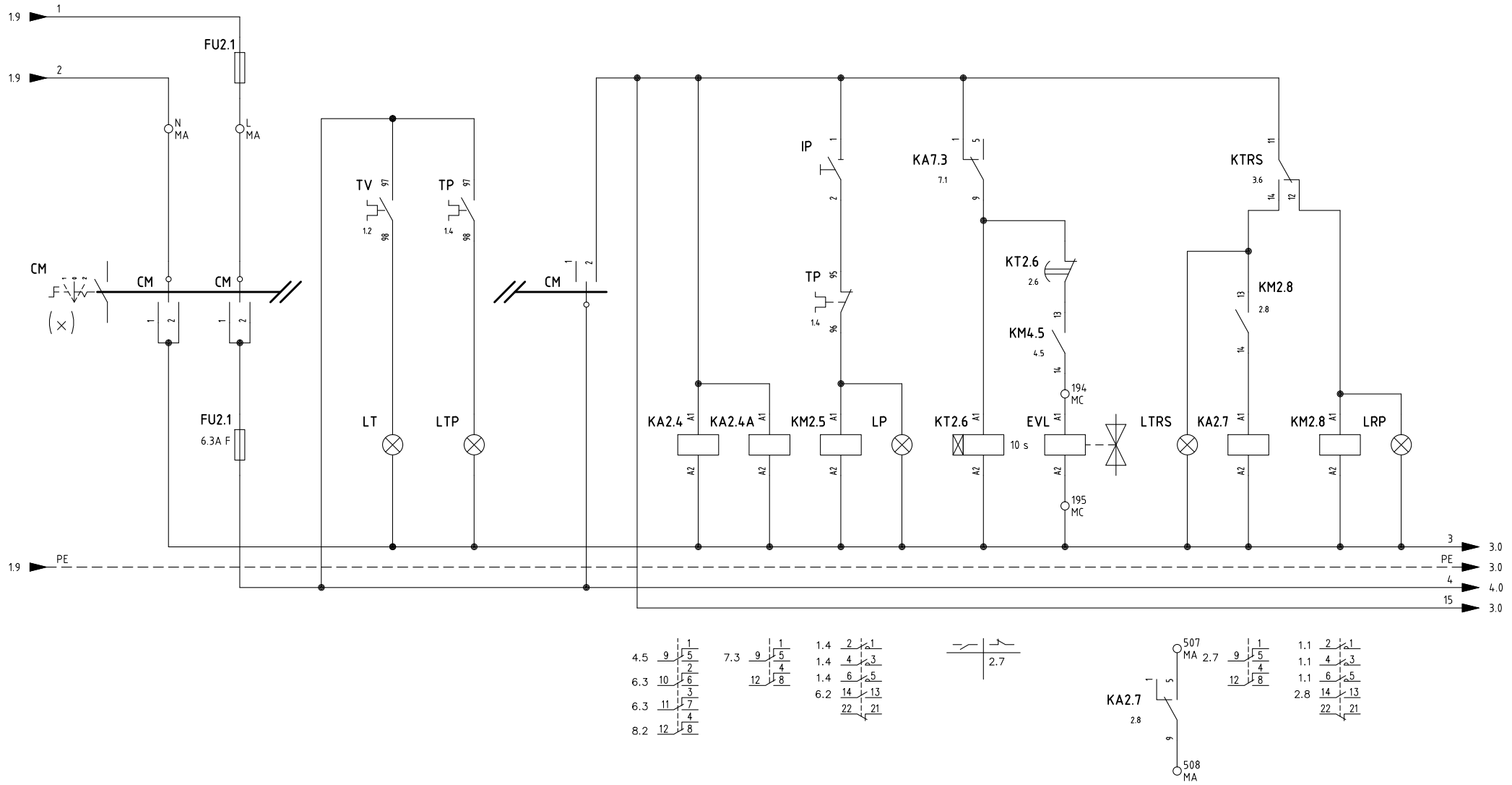

(×)

CM = POS.1 / FUEL 0 / PROG. = G mod	GAS / *GAS*
CM = POS 2 / FUEL 1 / PROG. = LO mod	NAFTA / *HEAVY OIL*

Data 20/12/2012		PREC.	FOGLIO
Revisione 03		1	2
Dis. N. 05 – 0978		SEGUE	TOTALE
		3	14

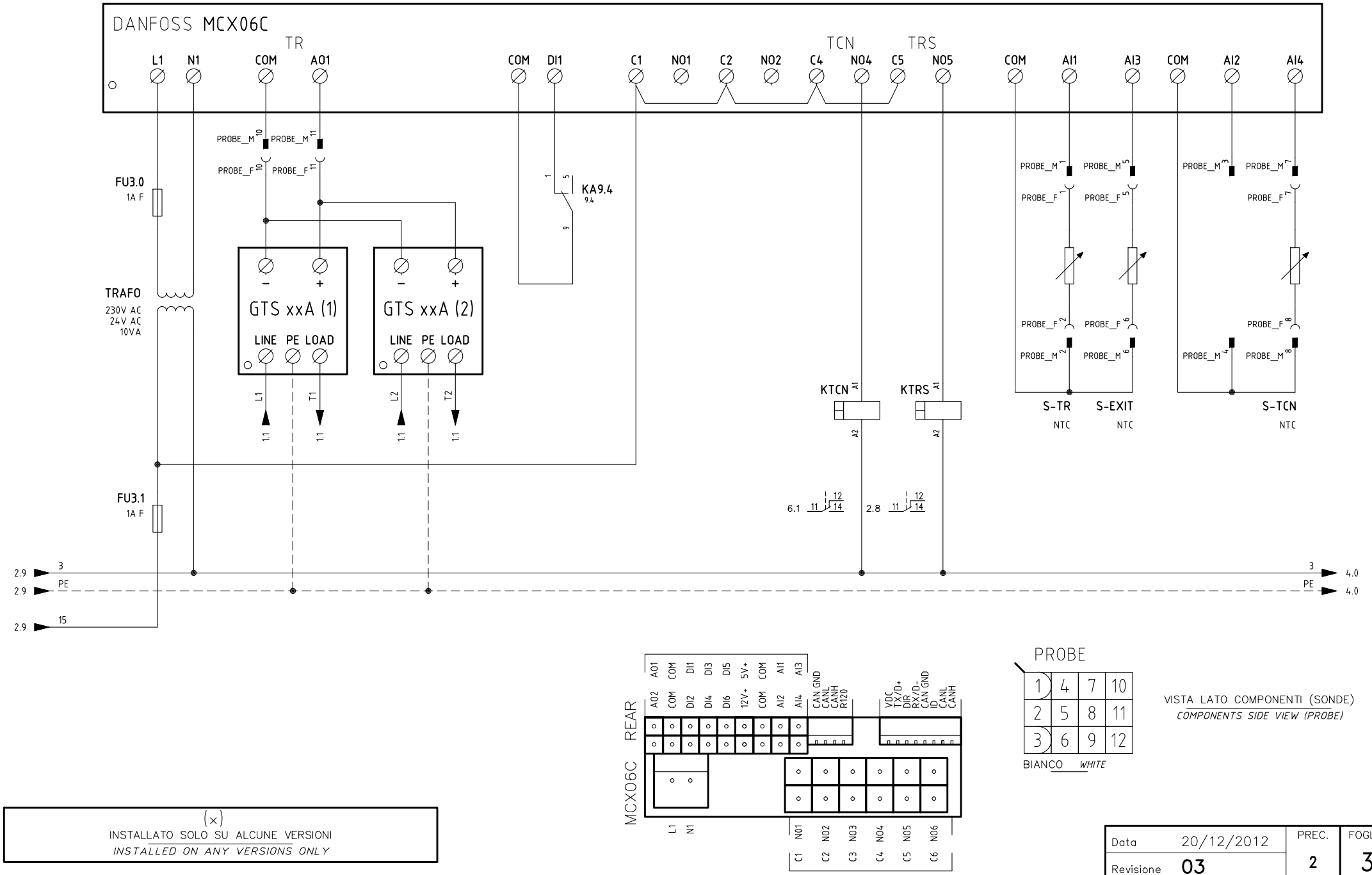

(×)
INSTALLATO SOLO SU ALCUNE VERSIONI
INSTALLED ON ANY VERSIONS ONLY

Data 20/12/2012		PREC. 2	FOGLIO 3
Revisione 03			
Dis. N. 05 – 0978		SEGUE 4	TOTALE 14

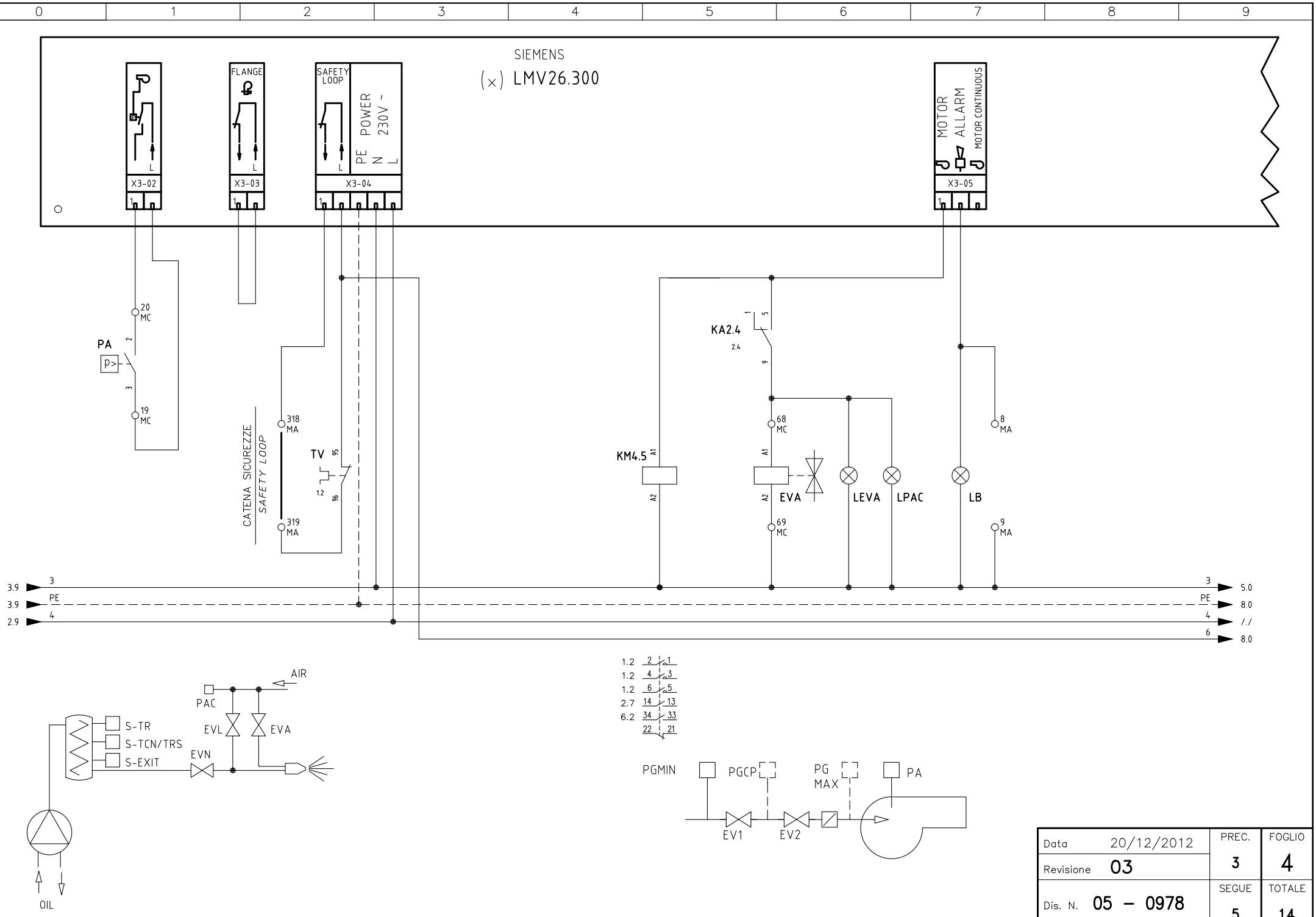

Data 20/12/2012		PREC. 3	FOGLIO 4
Revisione 03			
Dis. N. 05 – 0978		SEGUE 5	TOTALE 14

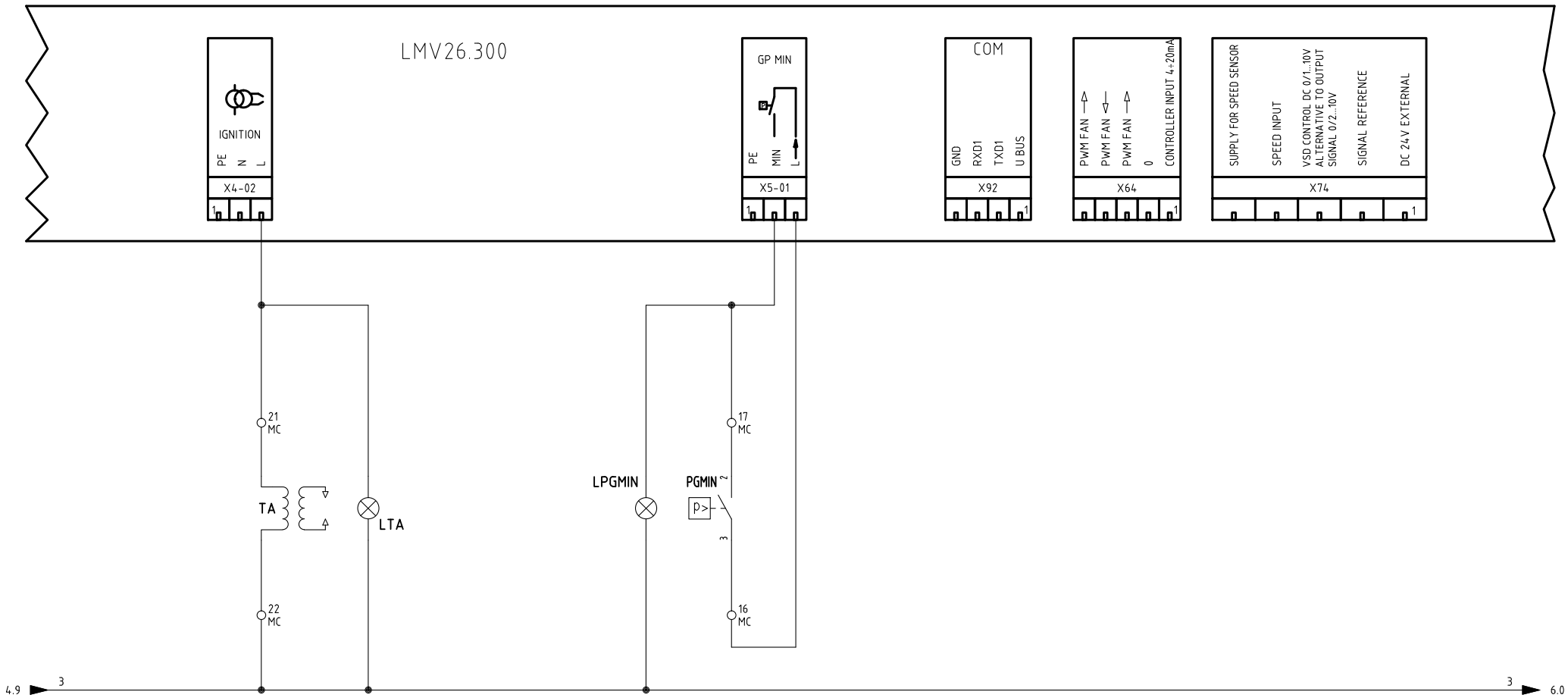

Data 20/12/2012		PREC. 4	FOGLIO 5
Revisione 03			
Dis. N. 05 – 0978		SEGUE 6	TOTALE 14

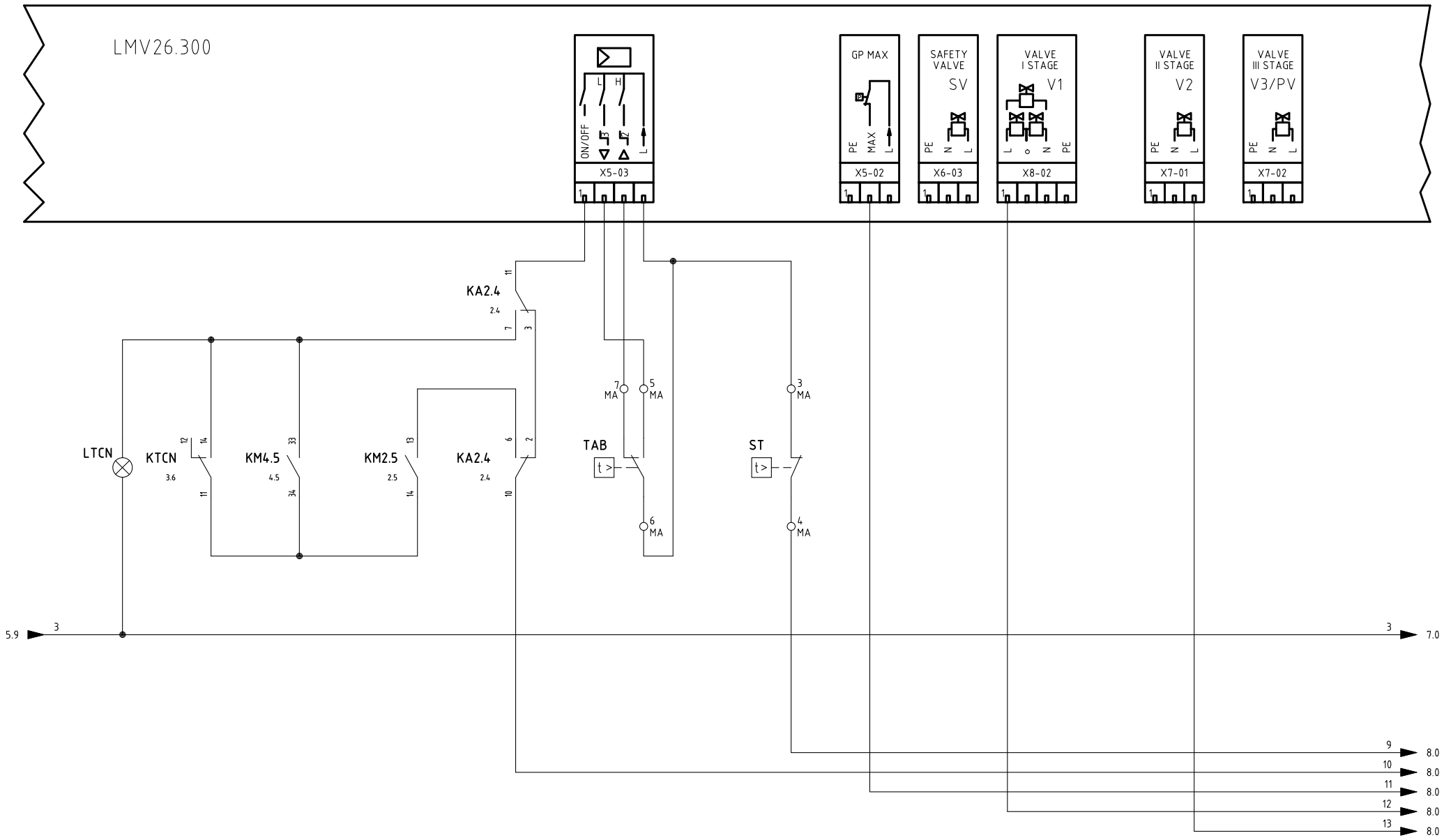

Data 20/12/2012		PREC. 5	FOGLIO 6
Revisione 03			
Dis. N. 05 – 0978		SEGUE 7	TOTALE 14

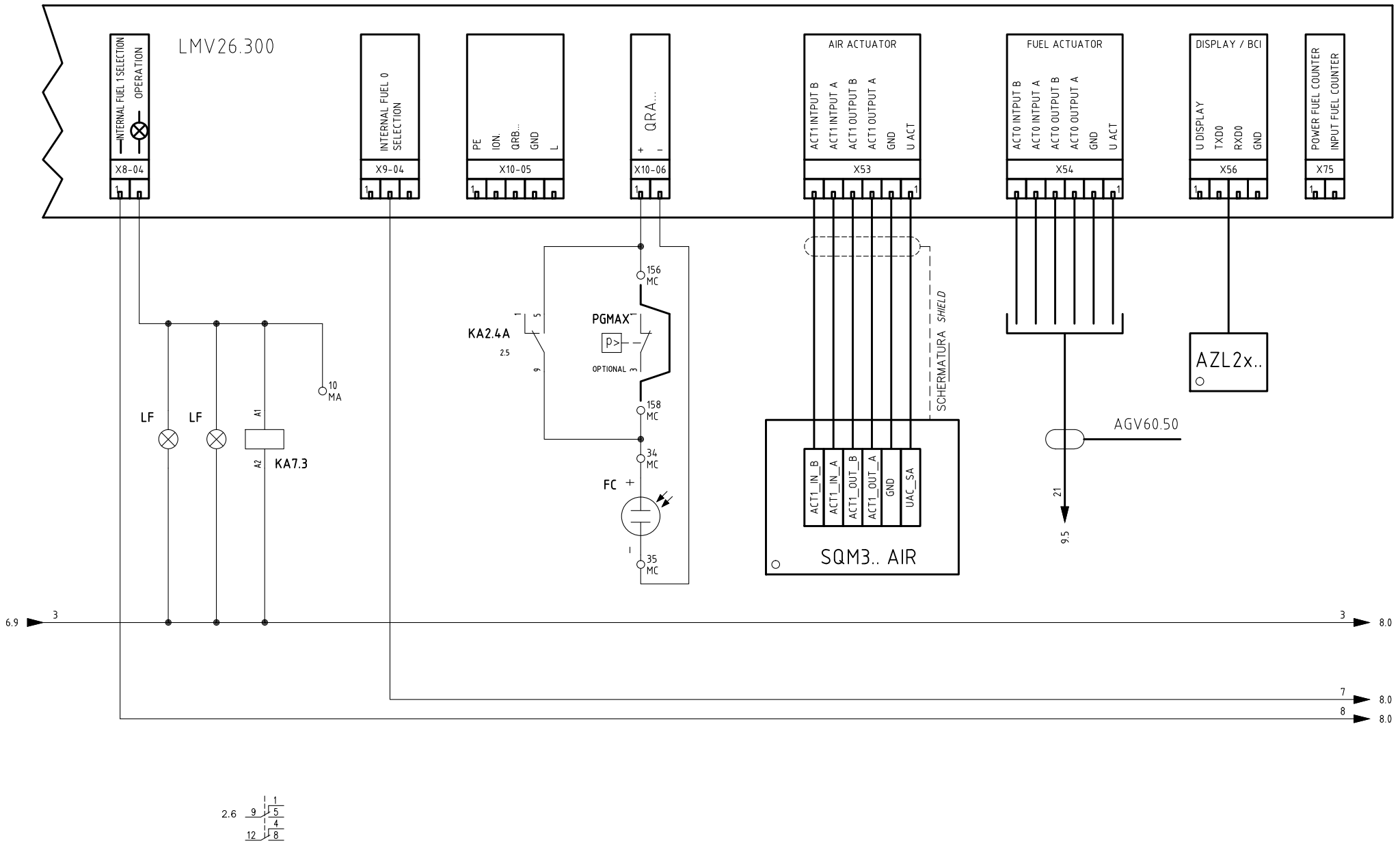

Data 20/12/2012		PREC.	FOGLIO
Revisione 03		6	7
Dis. N. 05 – 0978		SEGUE	TOTALE
		8	14

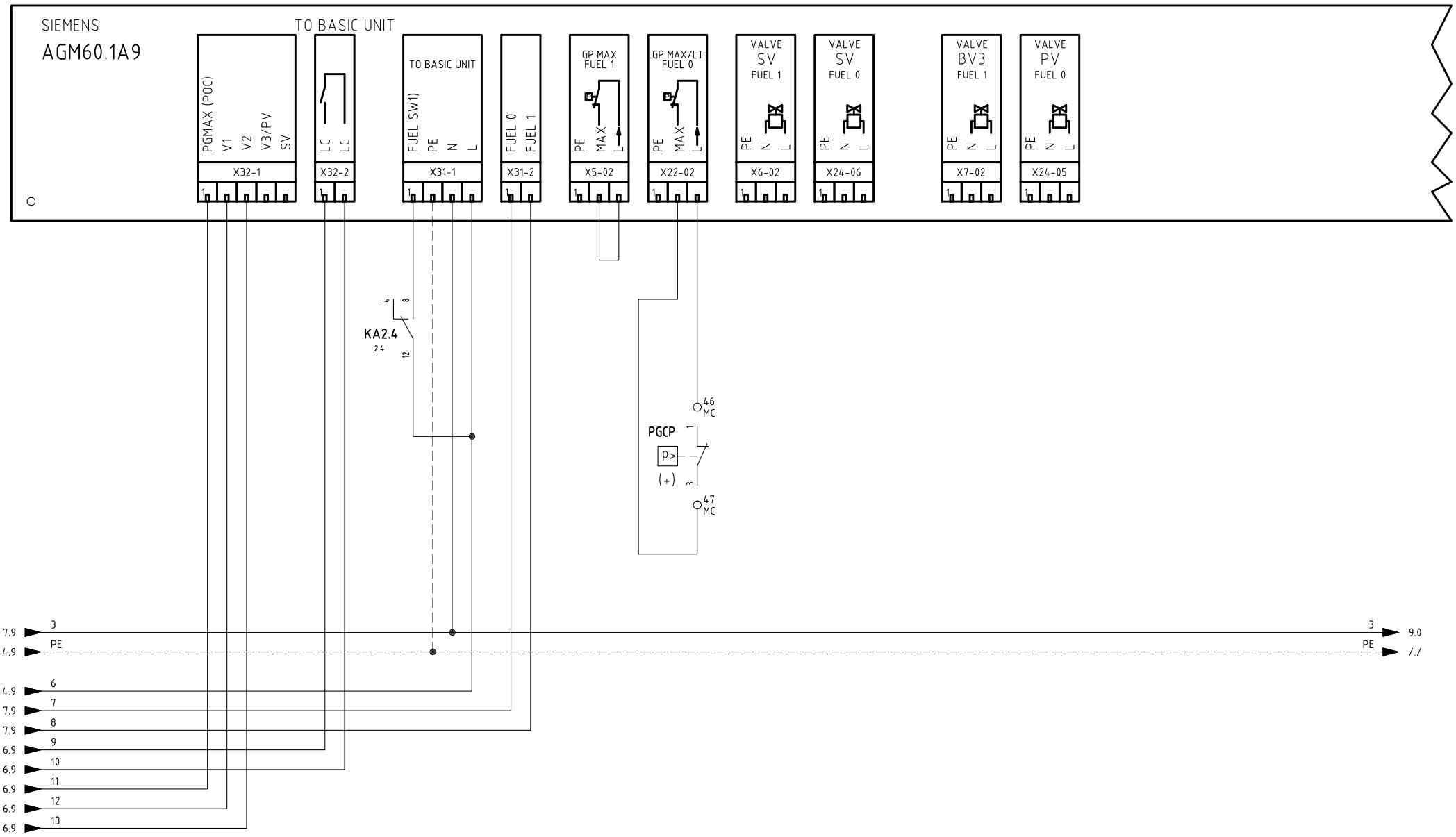

(+)
NON USATO PER VERSIONI SENZA CONTROLLO TENUTA
NOT USED FOR VERSION WITHOUT GAS LEAKAGE

Data 20/12/2012		PREC. 7	FOGLIO 8
Revisione 03			
Dis. N. 05 – 0978		SEGUE 9	TOTALE 14

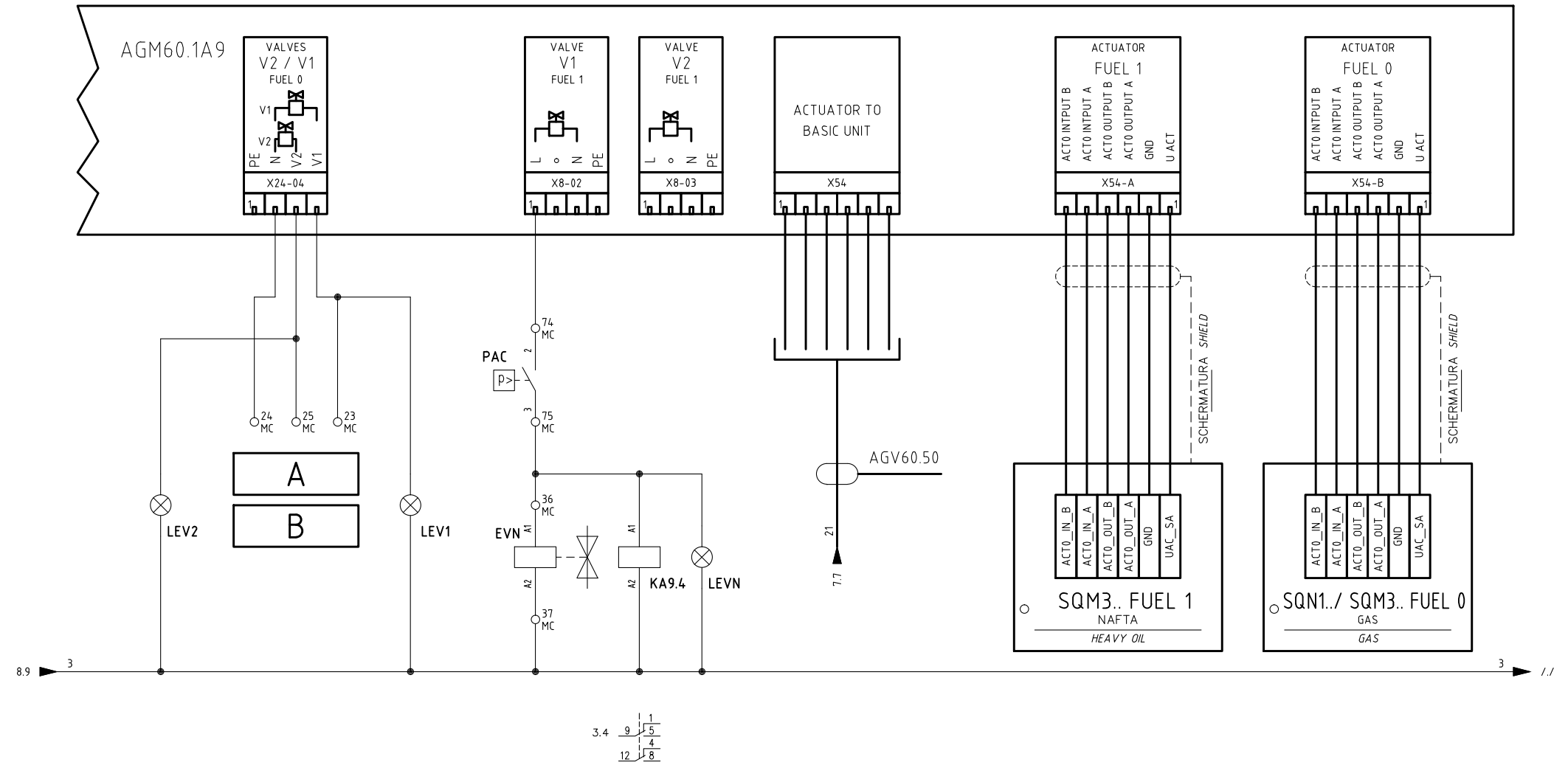

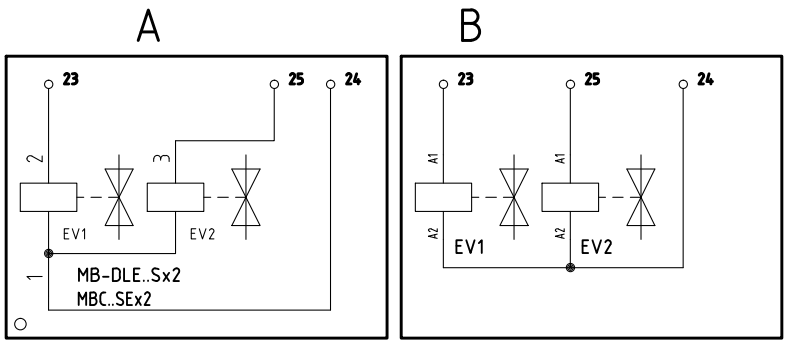

Data 20/12/2012		PREC. 8	FOGLIO 9
Revisione 03			
Dis. N. 05 – 0978		SEGUE 10	TOTALE 14

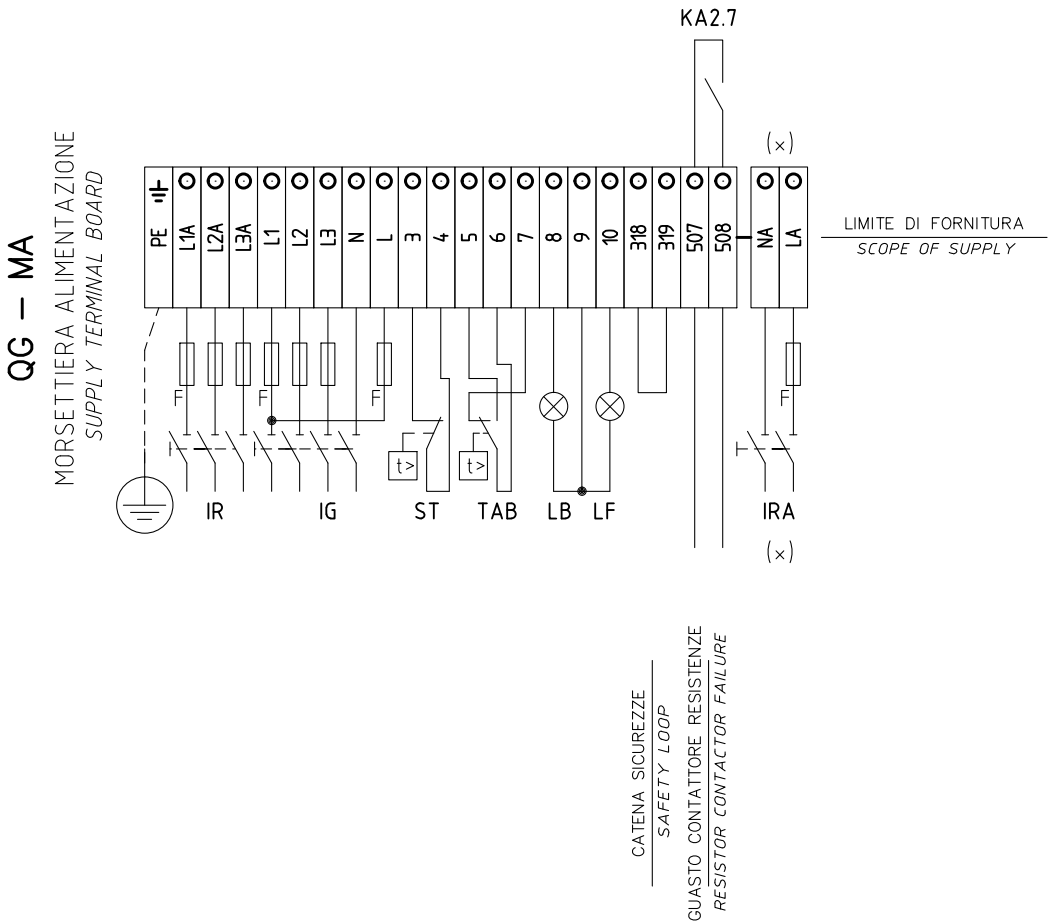

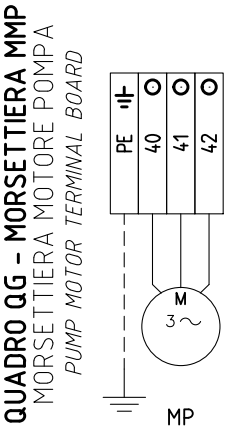

Data 20/12/2012		PREC. 9	FOGLIO 10
Revisione 03			
Dis. N. 05 – 0978		SEGUE 11	TOTALE 14

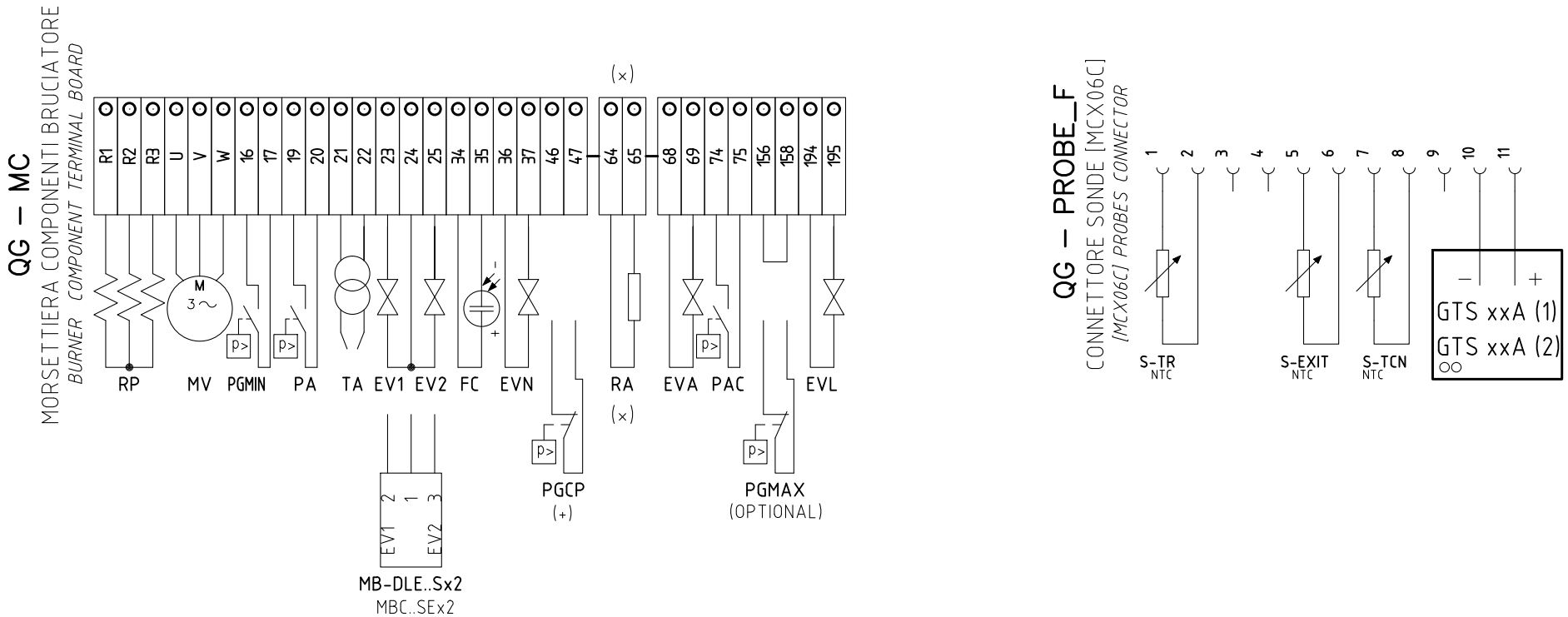

(x)
INSTALLATO SOLO SU ALCUNE VERSIONI
INSTALLED ON ANY VERSIONS ONLY

(+)
NON USATO PER VERSIONI SENZA CONTROLLO TENUTA
NOT USED FOR VERSION WITHOUT GAS LEAKAGE

Data	20/12/2012	PREC. 10	FOGLIO 11
Revisione	03		
Dis. N.	05 – 0978	SEGUE 12	TOTALE 14

	Sigla/Item	Foglio/Sheet	Funzione	Function
	AGM60.1A9	8	APPARECCHIATURA DI COMANDO	CONTROL SCHEME
	AZL2x..	7	INTERFACCIA UTENTE	USER INTERFACE
	CM	2	COMMUTATORE FUNZIONAMENTO 1)GAS 0)SPENTO 2)GASOLIO	MANUAL OPERATION SWITCH 1)GAS 0)OFF 2)LIGHT OIL
	EV1	9	ELETTROVALVOLA GAS LATO RETE	UPSTREAM GAS SOLENOID VALVE
	EV2	9	ELETTROVALVOLA GAS LATO BRUCIATORE	DOWNSTREAM GAS SOLENOID VALVE
	EVA	4	ELETTROVALVOLA ARIA COMPRESSA	COMPRESSED AIR SOLENOID VALVE
	EVL	2	ELETTROVALVOLA LAVAGGIO LANCIA	OIL GUN CLEAN SOLENOID VALVE
	EVN	9	ELETTROVALVOLA NAFTA	OIL SOLENOID VALVE
	FC	7	SONDA UV RILEVAZIONE FIAMMA	UV FLAME DETECTOR
(×)	FU1.0	1	FUSIBILE DI LINEA	LINE FUSE
(×)	FU1.0A	1	FUSIBILE LINEA RESISTENZE AUSILIARIE	LINE AUXILIARY HEATERS FUSE
	FU1.1	1	FUSIBILI LINEA PRERISCALDATORE RP	LINE PRE-HEATING RP FUSES
	FU1.2	1	FUSIBILI LINEA MOTORE VENTILATORE	FAN MOTOR LINE FUSES
	FU1.3	1	FUSIBILI LINEA POMPA	PUMP LINE FUSES
	FU2.1	2	FUSIBILE LINEA AUSILIARI	AUXILIARY LINE FUSE
	FU2.1	2	FUSIBILE LINEA AUSILIARI	AUXILIARY LINE FUSE
	FU3.0	3	FUSIBILE AUSILIARIO	AUXILIARY FUSE
	FU3.1	3	FUSIBILE AUSILIARIO	AUXILIARY FUSE
	GTS xxA (1)	3	TIRISTORE	THYRISTOR
	GTS xxA (2)	3	TIRISTORE	THYRISTOR
	IB	1	INTERRUTTORE LINEA BRUCIATORE	BURNER LINE SWITCH
	IP	2	INTERRUTTORE POMPA NAFTA	OIL PUMP SWITCH
	IR	1	INTERRUTTORE LINEA RESISTENZE PRERISCALDATORE	PRE-HEATING RESISTOR LINE SWITCH
(×)	IRA	1	INTERRUTTORE RESISTENZE AUSILIARIE	AUXILIARY HEATERS SWITCH
(×)	IRAUX.	1	INTERRUTTORE RESISTENZE AUSILIARIE	AUXILIARY HEATERS SWITCH
	KA2.4	2	RELE'' AUSILIARIO	AUXILIARY RELAY
	KA2.4A	2	RELE'' AUSILIARIO	AUXILIARY RELAY
	KA2.7	2	RELE'' AUSILIARIO SEGNALAZIONE GUASTO CONTATTORE RESISTENZE	AUXILIARY RELAY FOR RESISTOR CONTACTOR FAILURE
	KA7.3	7	RELE'' AUSILIARIO	AUXILIARY RELAY
	KA9.4	9	RELE'' AUSILIARIO	AUXILIARY RELAY
	KM2.5	2	CONTATTORE MOTORE POMPA NAFTA	OIL PUMP MOTOR CONTACTOR
	KM2.8	2	CONTATTORE RESISTENZE PRERISCALDATORE [RP]	PRE-HEATING RESISTOR [RP] CONTACTOR
	KM4.5	4	CONTATTORE MOTORE VENTILATORE	FAN MOTOR CONTACTOR
	KT2.6	2	RELE'' TEMPORIZZATORE	DELAYED RELAY
	KTCN	3	RELE'' AUSILIARIO	AUXILIARY RELAY
	KTRS	3	RELE'' AUSILIARIO	AUXILIARY RELAY
	LB	4	LAMPADA SEGNALAZIONE BLOCCO BRUCIATORE	INDICATOR LIGHT FOR BURNER LOCK-OUT
	LEV1	9	LAMPADA SEGNALAZIONE APERTURA [EV1]	INDICATOR LIGHT FOR OPENING OF ELECTRO-VALVE [EV1]
	LEV2	9	LAMPADA SEGNALAZIONE APERTURA [EV2]	INDICATOR LIGHT FOR OPENING OF ELECTRO-VALVE [EV2]

(×)
INSTALLATO SOLO SU ALCUNE VERSIONI
INSTALLED ON ANY VERSIONS ONLY

Data 20/12/2012		PREC. 11	FOGLIO 12
Revisione 03			
Dis. N. 05 – 0978		SEGUE 13	TOTALE 14

	Sigla/Item	Foglio/Sheet	Funzione	Function
	LEVA	4	LAMPADA SEGNALAZIONE APERTURA [EVA]	INDICATOR LIGHT FOR OPENING OF ELECTRO–VALVE [EVA]
	LEVN	9	LAMPADA SEGNALAZIONE APERTURA EVN	СИГНАЛЬНАЯ ЛАМПОЧКА ОТКРЫТИЯ EVN
	LF	7	LAMPADA SEGNALAZIONE FUNZIONAMENTO BRUCIATORE	INDICATOR LIGHT BURNER OPERATION
	LF	7	LAMPADA SEGNALAZIONE FUNZIONAMENTO BRUCIATORE	INDICATOR LIGHT BURNER OPERATION
	LMV26.300	4	APPARECCHIATURA DI COMANDO	CONTROL SCHEME
	LP	2	LAMPADA SEGNALAZIONE FUNZIONAMENTO POMPA	INDICATOR LIGHT FOR PUMP OPERATION
	LPAC	4	LAMPADA SEGNALAZIONE INTERVENTO PRESSOSTATO [PAC]	INDICATOR LIGHT FOR OPERATING PRESSURE SWITCH [PAC]
	LPGMIN	5	LAMPADA SEGNALAZIONE PRESENZA GAS IN RETE	INDICATOR LIGHT FOR PRESENCE OF GAS IN THE NETWORK
	LRP	2	LAMPADA SEGNALAZIONE FUNZIONAMENTO PRERISCALDATORE [RP]	INDICATOR LIGHT FOR PRE–HEATING RESISTOR [RP] OPERATION
	LT	2	LAMPADA SEGNALAZIONE BLOCCO TERMICO MOTORE VENTILATORE	INDICATOR LIGHT FOR FAN MOTOR OVERLOAD THERMAL CUTOUT
	LTA	5	LAMPADA SEGNALAZIONE TRASFORMATORE DI ACCENSIONE	IGNITION TRANSFORMER INDICATOR LIGHT
	LTCN	6	LAMPADA SEGNALAZIONE CONSENSO TERMOSTATO [TCI]	INDICATOR LIGHT FOR [TCI] THERMOSTAT CONSENT
	LTP	2	LAMPADA SEGNALAZIONE BLOCCO TERMICO MOTORE POMPA	INDICATOR LIGHT FOR PUMP MOTOR OVERLOAD THERMAL CUTOUT
	LTRS	2	LAMPADA SEGNALAZIONE BLOCCO TERMOSTATO DI SICUREZZA [TRS]	INDICATOR LIGHT FOR [TRS] SAFETY THERMOSTAT
	MB–DLE..Sx2	9	GRUPPO VALVOLE GAS	GAS VALVES GROUP
	MBC..SEx2	9	GRUPPO VALVOLE GAS (ALTERNATIVO)	GAS VALVES GROUP (ALTERNATIVE)
	MCX06C	3	REGOLATORE TEMPERATURE NAFTA	OIL TEMPERATURE REGULATOR
	MP	1	MOTORE POMPA NAFTA	OIL PUMP MOTOR
	MV	1	MOTORE VENTILATORE	FAN MOTOR
	PA	4	PRESSOSTATO ARIA	AIR PRESSURE SWITCH
	PAC	9	PRESSOSTATO ARIA DI POLVERIZZAZIONE	ATOMISATION AIR PRESSURE SWITCH
	PGCP	8	PRESSOSTATO GAS CONTROLLO PERDITE	GAS LEAKAGE PRESSURE SWITCH
	PGMAX	7	PRESSOSTATO GAS DI MASSIMA PRESSIONE (OPTIONAL)	MAXIMUM PRESSURE GAS SWITCH (OPTIONAL)
	PGMIN	5	PRESSOSTATO GAS DI MINIMA PRESSIONE	MINIMUM GAS PRESSURE SWITCH
(×)	RA	1	RESISTENZE AUSILIARIE	AUXILIARY HEATERS
	RP	1	RESISTENZE PRERISCALDATORE NAFTA	PRE–HEATING TANK RESISTORS
	S–EXIT	3	SONDA TEMPERATURA USCITA BARILOTTO	TANK OUTLET OIL TEMPERATURE PROBE
	S–TCN	3	SONDA TEMPERATURA CONSENSO NAFTA	OIL CONSENT TEMPERATURE PROBE
	S–TR	3	SONDA TEMPERATURA RESISTENZE	RESISTOR TEMPERATURE PROBE
	SQM3.. AIR	7	SERVOCOMANDO SERRANDA ARIA	AIR DAMPER ACTUATOR
	SQM3.. FUEL 1	9	SERVOCOMANDO REGOLATORE NAFTA	HEVY OIL REGULATOR ACTUATOR
	SQN1../ SQM3.. FUEL 0	9	SERVOCOMANDO FARFALLA GAS	GAS THROTTLE VALVE ACTUATOR
	ST	6	SERIE TERMOSTATI/PRESSOSTATI	SERIES OF THERMOSTATS OR PRESSURE SWITCHES
	TA	5	TRASFORMATORE DI ACCENSIONE	IGNITION TRANSFORMER
	TAB	6	TERMOSTATO/PRESSOSTATO ALTA–BASSA FIAMMA	HIGH–LOW THERMOSTAT/PRESSURE SWITCHES
	TP	1	TERMICO MOTORE POMPA	PUMP MOTOR THERMAL
	TRAFO	3	TRASFORMATORE AUSILIARIO	AUXILIARY TRANSFORMER
	TV	1	TERMICO MOTORE VENTILATORE	FAN MOTOR THERMAL

(×)
INSTALLATO SOLO SU ALCUNE VERSIONI
INSTALLED ON ANY VERSIONS ONLY

Data 20/12/2012		PREC.	FOGLIO
Revisione 03		12	13
Dis. N. 05 – 0978		SEGUE	TOTALE
		14	14

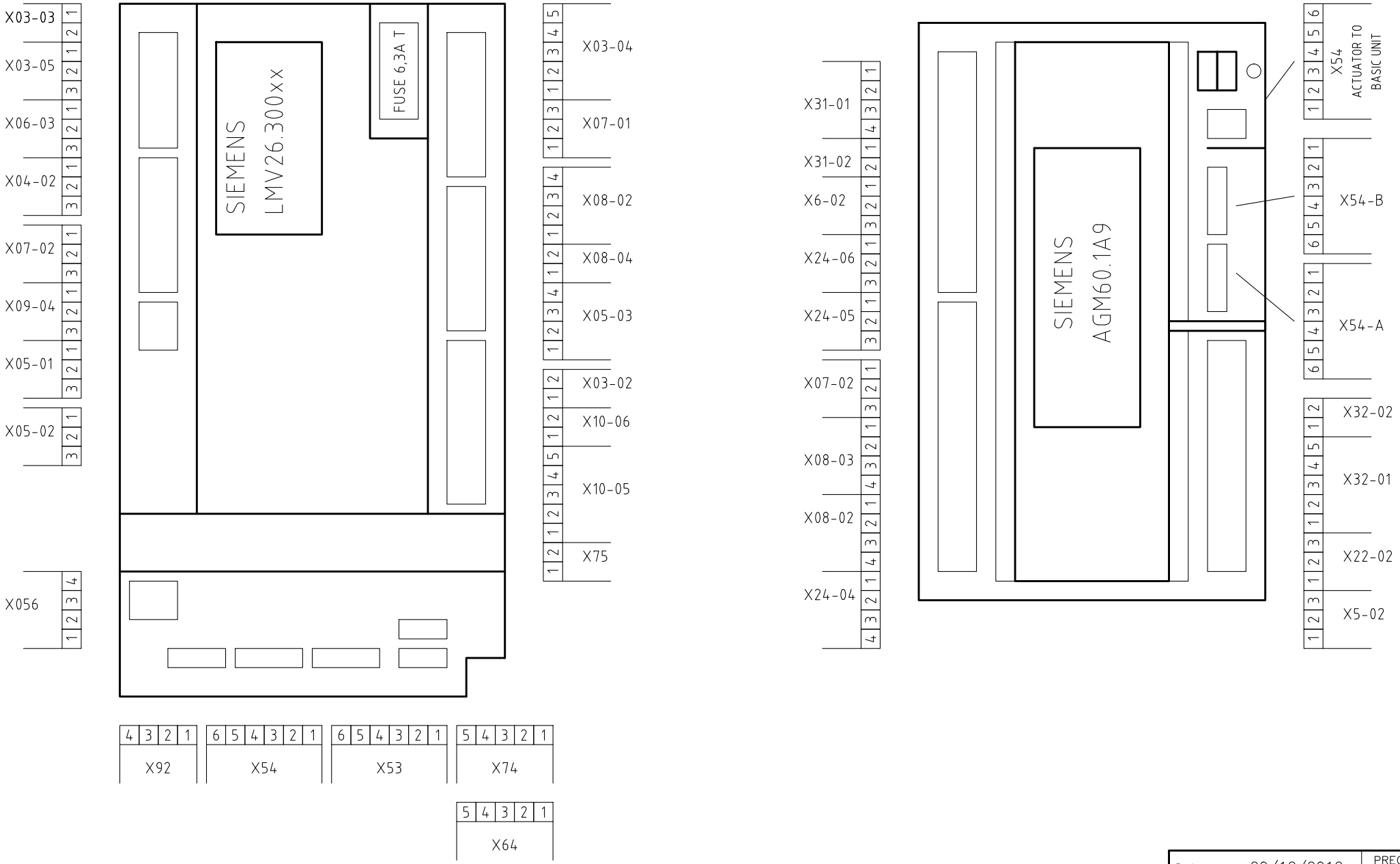

Data 20/12/2012		PREC.	FOGLIO
Revisione 03		13	14
Dis. N. 05 – 0978		SEGUE	TOTALE
		/	14