NG550
NGX550
LG550
LGX550

Microprocessor-controlled (LMV2x/3x)

gas burners

MANUAL OF INSTALLATION - USE - MAINTENANCE

CIB UNIGAS

BURNERS - BRUCIATORI - BRULERS - BRENNER - QUEMADORES - ГОРЕЛКИ

M039245CB Rel. 0.2 01/2024

DANGERS, WARNINGS AND NOTES OF CAUTION

THIS MANUAL IS SUPPLIED AS AN INTEGRAL AND ESSENTIAL PART OF THE PRODUCT AND MUST BE DELIVERED TO THE USER.

INFORMATION INCLUDED IN THIS SECTION ARE DEDICATED BOTH TO THE USER AND TO PERSONNEL FOLLOWING PRODUCT INSTALLATION AND MAINTENANCE.

THE USER WILL FIND FURTHER INFORMATION ABOUT OPERATING AND USE RESTRICTIONS, IN THE SECOND SECTION OF THIS MANUAL. WE HIGHLY RECOMMEND TO READ IT.

CAREFULLY KEEP THIS MANUAL FOR FUTURE REFERENCE.

1) GENERAL INTRODUCTION

- The equipment must be installed in compliance with the regulations in force, following the manufacturer's instructions, by qualified personnel.
- Qualified personnel means those having technical knowledge in the field of components for civil or industrial heating systems, sanitary hot water generation and particularly service centres authorised by the manufacturer.
- Improper installation may cause injury to people and animals, or damage to property, for which the manufacturer cannot be held liable.
- Remove all packaging material and inspect the equipment for integrity.

In case of any doubt, do not use the unit - contact the supplier.

The packaging materials (wooden crate, nails, fastening devices, plastic bags, foamed polystyrene, etc), should not be left within the reach of children, as they may prove harmful.

- Before any cleaning or servicing operation, disconnect the unit from the mains by turning the master switch OFF, and/or through the cut-out devices that are provided.
- Make sure that inlet or exhaust grilles are unobstructed.
- In case of breakdown and/or defective unit operation, disconnect the unit. Make no attempt to repair the unit or take any direct action.

Contact qualified personnel only.

Units shall be repaired exclusively by a servicing centre, duly authorised by the manufacturer, with original spare parts and accessories.

Failure to comply with the above instructions is likely to impair the unit's safety.

To ensure equipment efficiency and proper operation, it is essential that maintenance operations are performed by qualified personnel at regular intervals, following the manufacturer's instructions.

- When a decision is made to discontinue the use of the equipment, those parts likely to constitute sources of danger shall be made harmless.
- In case the equipment is to be sold or transferred to another user, or in case the original user should move and leave the unit behind, make sure that these instructions accompany the equipment at all times so that they can be consulted by the new owner and/or the installer.
- This unit shall be employed exclusively for the use for which it is meant. Any other use shall be considered as improper and, therefore, dangerous.

The manufacturer shall not be held liable, by agreement or otherwise, for damages resulting from improper installation, use and failure to comply with the instructions supplied by the manufacturer.The occurrence of any of the following circustances may cause explosions, polluting unburnt gases (example: carbon monoxide CO), burns, serious harm to people, animals and things:

- Failure to comply with one of the WARNINGS in this chapter
- Incorrect handling, installation, adjustment or maintenance of the burner
- Incorrect use of the burner or incorrect use of its parts or optional supply

2) SPECIAL INSTRUCTIONS FOR BURNERS

- The burner should be installed in a suitable room, with ventilation openings complying with the requirements of the regulations in force, and sufficient for good combustion.
- Only burners designed according to the regulations in force should be used.
- This burner should be employed exclusively for the use for which it was designed.
- Before connecting the burner, make sure that the unit rating is the same as delivery mains (electricity, gas oil, or other fuel).
- Observe caution with hot burner components. These are, usually, near to the flame and the fuel pre-heating system, they become hot during the unit operation and will remain hot for some time after the burner has stopped.

When the decision is made to discontinue the use of the burner, the user shall have qualified personnel carry out the following operations:

a Remove the power supply by disconnecting the power cord from the mains.

b Disconnect the fuel supply by means of the hand-operated shut-off valve and remove the control handwheels from their spindles.

Special warnings

- Make sure that the burner has, on installation, been firmly secured to the appliance, so that the flame is generated inside the appliance fire-box.
- Before the burner is started and, thereafter, at least once a year, have qualified personnel perform the following operations:

a set the burner fuel flow rate depending on the heat input of the appliance;

b set the flow rate of the combustion-supporting air to obtain a combustion efficiency level at least equal to the lower level required by the regulations in force;

c check the unit operation for proper combustion, to avoid any harmful or polluting unburnt gases in excess of the limits permitted by the regulations in force;

d make sure that control and safety devices are operating properly;

e make sure that exhaust ducts intended to discharge the products of combustion are operating properly;

f on completion of setting and adjustment operations, make sure that all mechanical locking devices of controls have been duly tightened;

g make sure that a copy of the burner use and maintenance instructions is available in the boiler room.

- In case of a burner shut-down, reser the control box by means of the RESET pushbutton. If a second shut-down takes place, call the Technical Service, **without trying to RESET further**.
- The unit shall be operated and serviced by qualified personnel only, in compliance with the regulations in force.

3) GENERAL INSTRUCTIONS DEPENDING ON FUEL USED

3a) ELECTRICAL CONNECTION

- For safety reasons the unit must be efficiently earthed and installed as required by current safety regulations.
- It is vital that all saftey requirements are met. In case of any doubt, ask for an accurate inspection of electrics by qualified personnel, since the manufacturer cannot be held liable for damages that may be caused by failure to correctly earth the equipment.
- Qualified personnel must inspect the system to make sure that it is adequate to take the maximum power used by the equipment shown on the equipment rating plate. In particular, make sure that the system cable cross section is adequate for the power absorbed by the unit.
- No adaptors, multiple outlet sockets and/or extension cables are permitted to connect the unit to the electric mains.
- An omnipolar switch shall be provided for connection to mains, as required by the current safety regulations.
- The use of any power-operated component implies observance of a few basic rules, for example:
  - do not touch the unit with wet or damp parts of the body and/or with bare feet;
  - do not pull electric cables;
  - do not leave the equipment exposed to weather (rain, sun, etc.) unless expressly required to do so;
  - do not allow children or inexperienced persons to use equipment;
- The unit input cable shall not be replaced by the user.
  In case of damage to the cable, switch off the unit and contact qualified personnel to replace.
  When the unit is out of use for some time the electric switch supplying all the power-driven components in the system (i.e. pumps, burner, etc.) should be switched off.

3b) FIRING WITH GAS, LIGHT OIL OR OTHER FUELS

GENERAL

- The burner shall be installed by qualified personnel and in compliance with regulations and provisions in force; wrong installation can cause injuries to people and animals, or damage to property, for which the manufacturer cannot be held liable.
- Before installation, it is recommended that all the fuel supply system pipes be carefully cleaned inside, to remove foreign matter that might impair the burner operation.
- Before the burner is commissioned, qualified personnel should inspect the following:

a the fuel supply system, for proper sealing;
b the fuel flow rate, to make sure that it has been set based on the firing rate required of the burner;
c the burner firing system, to make sure that it is supplied for the designed fuel type;
d the fuel supply pressure, to make sure that it is included in the range shown on the rating plate;
e the fuel supply system, to make sure that the system dimensions are adequate to the burner firing rate, and that the system is equipped with all the safety and control devices required by the regulations in force.

- When the burner is to remain idle for some time, the fuel supply tap or taps should be closed.

SPECIAL INSTRUCTIONS FOR USING GAS

Have qualified personnel inspect the installation to ensure that:

a the gas delivery line and train are in compliance with the regulations and provisions in force;
b all gas connections are tight;
c the boiler room ventilation openings are such that they ensure the air supply flow required by the current regulations, and in any case are sufficient for proper combustion.

- Do not use gas pipes to earth electrical equipment.
- Never leave the burner connected when not in use. Always shut the gas valve off.
- In case of prolonged absence of the user, the main gas delivery valve to the burner should be shut off.

Precautions if you can smell gas

a do not operate electric switches, the telephone, or any other item likely to generate sparks;
b immediately open doors and windows to create an air flow to purge the room;
c close the gas valves;
d contact qualified personnel.

- Do not obstruct the ventilation openings of the room where gas appliances are installed, to avoid dangerous conditions such as the development of toxic or explosive mixtures.

DIRECTIVES AND STANDARDS

Gas burners

European directives

-Regulation 2016/426/UE (appliances burning gaseous fuels)
-2014/35/UE (Low Tension Directive)
-2014/30/UE (Electromagnetic compatibility Directive)
-2006/42/EC (Machinery Directive)

Harmonized standards

-UNI EN 676 (Automatic forced draught burners for gaseous fuels)
-EN 55014-1 (Electromagnetic compatibility- Requirements for house hold appliances, electric tools and similar apparatus)
-EN 60204-1:2006 (Safety of machinery – Electrical equipment of machines.)
-CEI EN 60335-1 (Specification for safety of household and similar electrical appliances);
-CEI EN 60335-2-102 (Household and similar electrical appliances. Safety. Particular requirements for gas, oil and solid-fuel burning appliances having electrical connections).
-UNI EN ISO 12100:2010 (Safety of machinery - General principles for design - Risk assessment and risk reduction);

Light oil burners

European directives

-2014/35/UE (Low Tension Directive)
-2014/30/UE (Electromagnetic compatibility Directive)
-2006/42/EC (Machinery Directive)

Harmonized standards

-UNI EN 267-2011(Automatic forced draught burners for liquid fuels)
-EN 55014-1 (Electromagnetic compatibility- Requirements for house hold appliances, electric tools and similar apparatus)
-EN 60204-1:2006 (Safety of machinery – Electrical equipment of machines.)
-CEI EN 60335-1 (Specification for safety of household and similar electrical appliances);
-CEI EN 60335-2-102 (Household and similar electrical appliances. Safety. Particular requirements for gas, oil and solid-fuel burning appliances having electrical connections).
-UNI EN ISO 12100:2010 (Safety of machinery - General principles for design - Risk assessment and risk reduction);

Heavy oil burners

European Directives

-2014/35/UE (Low Tension Directive)
-2014/30/UE (Electromagnetic compatibility Directive)
-2006/42/EC (Machinery Directive)

Harmonized standards

-UNI EN 267(Automatic forced draught burners for liquid fuels)
-EN 55014-1 (Electromagnetic compatibility- Requirements for house hold appliances, electric tools and similar apparatus)
-EN 60204-1:2006 (Safety of machinery – Electrical equipment of machines.)
-CEI EN 60335-1 (Specification for safety of household and similar electrical appliances);
-CEI EN 60335-2-102 (Household and similar electrical appliances. Safety. Particular requirements for gas, oil and solid-fuel burning appliances having electrical connections).
-UNI EN ISO 12100:2010 (Safety of machinery - General principles for design - Risk assessment and risk reduction);

Gas - Light oil burners

European Directives

-Regulation 2016/426/UE (appliances burning gaseous fuels)
-2014/35/UE (Low Tension Directive)
-2014/30/UE (Electromagnetic compatibility Directive)
-2006/42/EC (Machinery Directive)

Harmonized standards

-UNI EN 676 (Automatic forced draught burners for gaseous fuels)
-UNI EN 267(Automatic forced draught burners for liquid fuels)
-EN 55014-1 (Electromagnetic compatibility- Requirements for house hold appliances, electric tools and similar apparatus)
-EN 60204-1:2006 (Safety of machinery – Electrical equipment of machines.)
-CEI EN 60335-1 (Specification for safety of household and similar electrical appliances);
-CEI EN 60335-2-102 (Household and similar electrical appliances. Safety. Particular requirements for gas, oil and solid-fuel burning appliances having electrical connections).
-UNI EN ISO 12100:2010 (Safety of machinery - General principles for design - Risk assessment and risk reduction);

Gas - Heavy oil burners

European directives:

-Regulation 2016/426/UE (appliances burning gaseous fuels)
-2014/35/UE (Low Tension Directive)
-2014/30/UE (Electromagnetic compatibility Directive)
-2006/42/EC (Machinery Directive)

Harmonized standards

-UNI EN 676 (Automatic forced draught burners for gaseous fuels)
-EN 55014-1 (Electromagnetic compatibility- Requirements for house hold appliances, electric tools and similar apparatus)
-EN 60204-1:2006 (Safety of machinery – Electrical equipment of machines.)
-CEI EN 60335-1 (Specification for safety of household and similar electrical appliances);
-CEI EN 60335-2-102 (Household and similar electrical appliances. Safety. Particular requirements for gas, oil and solid-fuel burning appliances having electrical connections).
-UNI EN ISO 12100:2010 (Safety of machinery - General principles for design - Risk assessment and risk reduction);

Industrial burners

European directives

-Regulation 2016/426/UE (appliances burning gaseous fuels)
-2014/35/UE (Low Tension Directive)
-2014/30/UE (Electromagnetic compatibility Directive)
-2006/42/EC (Machinery Directive)

Harmonized standards

-EN 55014-1 (Electromagnetic compatibility- Requirements for house hold appliances, electric tools and similar apparatus)
-EN 746-2 (Industrial thermoprocessing equipment - Part 2: Safety requirements for combustion and fuel handling systems)
-UNI EN ISO 12100:2010 (Safety of machinery - General principles for design - Risk assessment and risk reduction);
-EN 60204-1:2006 (Safety of machinery – Electrical equipment of machines.)
-EN 60335-2 (Electrical equipment of non-electric appliances for household and similar purposes. Safety requirements)

Burner data plate

For the following information, please refer to the data plate:

- burner type and burner model: must be reported in any communication with the supplier
- burner ID (serial number): must be reported in any communication with the supplier
- date of production (year and month)
- information about fuel type and network pressure

Type	--
Model	--
Year	--
S.Number	--
Output	--
Oil Flow	--
Fuel	--
Category	--
Gas Pressure	--
Viscosity	--
El.Supply	--
El.Consump.	--
Fan Motor	--
Protection	--
Drwaing n°	--
P.I.N.	--

SYMBOLS USED

WARNING! Failure to observe the warning may result in irreparable damage to the unit or damage to the environment

DANGER! Failure to observe the warning may result in serious injuries or death.

WARNING! Failure to observe the warning may result in electric shock with lethal consequences

Figures, illustrations and images used in this manual may differ in appearance from the actual product.

BURNER SAFETY

The burners - and the configurations described below - comply with the regulations in force regarding health, safety and the environment. For more in-depth information, refer to the declarations of conformity that are an integral part of this Manual.

DANGER! Incorrect motor rotation can seriously damage property and injure people.

Residual risks deriving from misuse and prohibitions

The burner has been built in order to make its operation safe; there are, however, residual risks.

Do not touch any mechanical moving parts with your hands or any other part of your body. Injury hazard
Do not touch any parts containing fuel (i.e. tank and pipes). Scalding hazard
Do not use the burner in situations other than the ones provided for in the data plate.
Do not use fuels other than the ones stated.
Do not use the burner in potentially explosive environments.
Do not remove or by-pass any machine safety devices.
Do not remove any protection devices or open the burner or any other component while the burner is running.
Do not disconnect any part of the burner or its components while the burner is running.
Untrained staff must not modify any linkages.

After any maintenance, it is important to restore the protection devices before restarting the machine.
All safety devices must be kept in perfect working order.
Personnel authorized to maintain the machine must always be provided with suitable protections.

ATTENTION: while running, the parts of the burner near the generator (coupling flange) are subject to overheating. Where necessary, avoid any contact risks by wearing suitable PPE.

PART I: INSTALLATION

GENERAL FEATURES

The control system is made of the Siemens LMV central unit that performs all the burner control functions and of the Siemens AZL local programming unit that interfaces the system with the user.

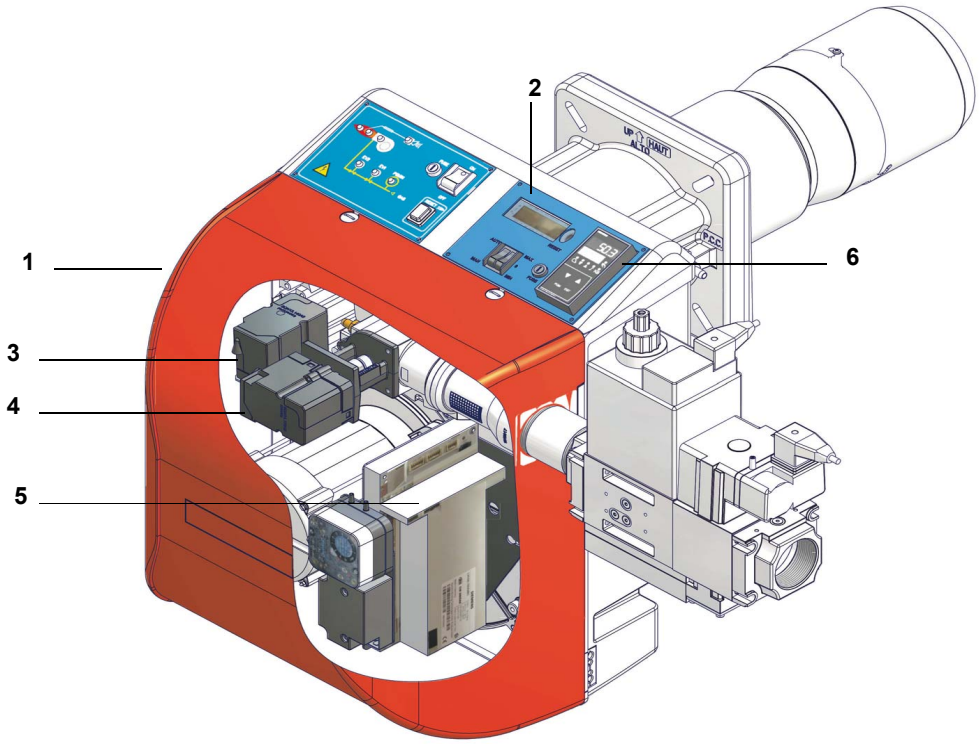

Fig. 1

Keys

1 Burner
2 AZL2..
3 Air actuator
4 Fuel actuator
5 LMV2..
6 Modulator (only modulating models)

The gas coming from the supply line, passes through the valves group provided with filter and governor. This one forces the pressure in the utilisation limits. In the double-stage , progressive and fully- modulating burners, the electric actuator, that moves proportionally the air damper and the gas butterfly valve, is controlled by the LMV2 Burner Management System (BMS). This one allows the optimisation of the gas flue values, as to get an efficient combustion. The combustion head positioning determines the burner's output. Fuel and comburent are routed into separated ways as far as the zone of flame generation (combustion chamber). The air (comburent) and fuel (gas, gas oil, heavy oil) are forced into the combustion chamber. The control panel, placed on the burner's front side, shows each operating stage.

How to interpret the burner "Performance curve"

To check if the burner is suitable for the boiler to which it must be installled, the following parameters are needed:

- furnace input, in kW or kcal/h (kW = kcal/h / 860);
- backpressure (data are available on the boiler ID plate or in the user's manual).

Example:

Furnace input: 600kW

Backpressure: 4mbar

In the "Performance curve" diagram (Fig. 2), draw a vertical line matching the furnace input value and an horizontal line matching the backpressure value. The burner is suitable if the intersection point A is inside the performance curve.

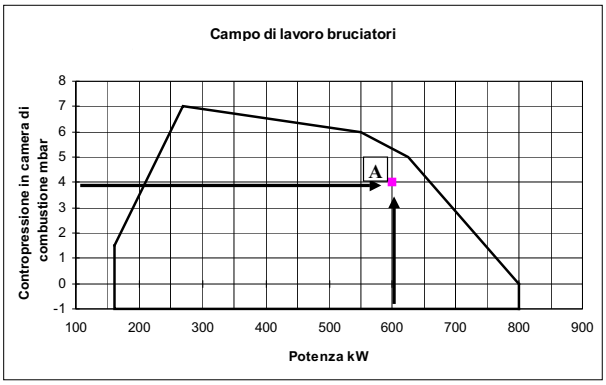

Fig. 2

Data are referred to standard conditions: atmospheric pressure at 1013mbar, ambient temperature at 15°C.

Checking the proper gas train size

To check the proper gas train size, it is necessary to the available gas pressure value upstream the burner's gas valve. Then subtract the backpressure. The result is called **p_{gas}**. Draw a vertical line matching the furnace input value (600kW, in the example), quoted on the x-axis, as far as intercepitng the network pressure curve, according to the installed gas train (DN65, in the example). From the interception point, draw an horizontal line as far as matching, on the y-axis, the value of pressure necessary to get the requested furnace input. This value must be lower or equal to the **p_{gas}** value, calculated before.

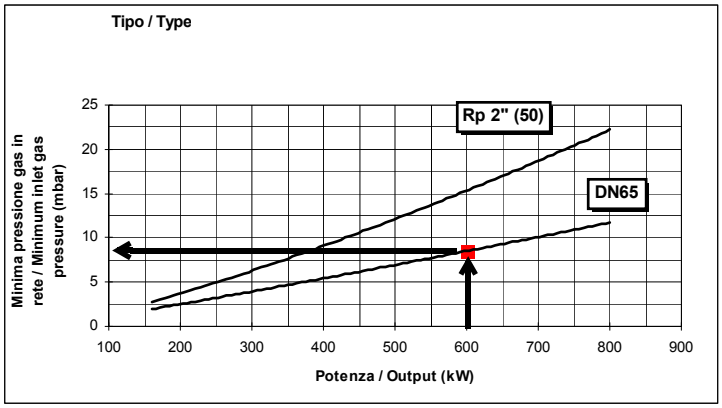

Fig. 3

BURNERS SPECIFICATIONS

Burner model identification

Burners are identified by burner type and model. Burner model identification is described as follows.

Type **NGX550** Model	**M-.**	**MD.**	**S.**	**.***	**A.**	**1.**	**32.**	**EA**
(1)	(2)	(3)	(4)	(5)	(6)	(7)	(8)	(9)

(1) BURNER TYPE	NG - Natural gas burner LG - L.P.G. burner NGX - Low NOx burners LGX - Natural gas Low NOx burners
(2) FUEL	M - Natural gas L - LPG B - Biogas
(3) OPERATION	PR - Progressive MD - Fully modulating
(4) BLAST TUBE	S - standard L - extended
(5) DESTINATION COUNTRY	* - see data plate
(6) BURNER VERSION	A - Standard, Y - Special
(7) EQUIPMENT	0 = 2 gas valves 1= 2 Gas valves + gas proving system (option) 8 = 2 gas valves + gas proving system + maximum gas pressure switch
(8) GAS CONNECTION	25 = Rp1 32 = Rp1"1/4 40 = Rp1"1/2 50 = Rp2
(9)MICROPROCESSOR CONTROLLED BURNER	EA = micro-processor controlled burner EB = micro-processor controlled burner with inverter

Fuel

Type	--
Model	--
Year	--
S.Number	--
Output	--
Oil Flow	--
Fuel	--
Category	--
Gas Pressure	--
Viscosity	--
El.Supply	--
El.Consump.	--

WARNING! The burner must be used only with the fuel specified in the burner data plate .

The burner technical specifications, described in this manual, refer to natural gas (calorific net value Hi = 9.45 kWh/Stm^3, density ρ = 0.717 Kg/Stm^3) and LPG (calorific net value Hi = 26.79 kWh/Stm^3, density ρ = 2.151 Kg/Stm^3). For different fuel such as town gas and biogas, multiply the values of flow and pressure by th corrective factors shown in the table below.

Fuel	**Hi** (KWh/Stm^3)	**ρ** (kg/Stm^3)	f_Q	f_p
Town gas	4,88	0,6023	1,936	3,3
Biogas	6,395	1,1472	1,478	3,5

For example, to obtain the flow and pressure values for the biogas:

$$Q_{biogas} = Q_{naturalGas} \cdot 1,478$$

$$p_{biogas} = p_{naturalGas} \cdot 3,5$$

ATTENTION! The combustion head type and the settings depend on the fuel. The burner must be used only for its intended purpose specified in the burner data plate .

ATTENTION! The corrective factors in the above table depend on the gas composition, so on the calorifc value and the density of the gas. The above value can be taken only as reference.

Matching the burner to the boiler

The burners described in this manual have been tested with combustion chambers that comply with EN676 regulation and whose dimensions are described in the diagram . In case the burner must be coupled with boilers with a combustion chamber smaller in diameter or shorter than those described in the diagram, please contact the supplier, to verify that a correct matching is possible, with respect of the application involved. To correctly match the burner to the boiler verify the necessary input and the pressure in combustion chamber are included in the burner performance curve; otherwise the choice of the burner must be revised consulting the burner manufacturer. To choose the blast tube lenght follow the instructions of the boiler manufacturer. In absence of these consider the following:

- Cast-iron boilers, three pass flue boilers (with the first pass in the rear part): the blast tube must protrude no more than 100 mm into the combustion chamber.
- Pressurised boilers with flame reversal: in this case the blast tube must penetrate at least 50 - 100 mm into combustion chamber in respect to the tube bundle plate.

The length of the blast tubes does not always allow this requirement to be met, and thus it may be necessary to use a suitably-sized spacer to move the burner backwards or to design a blast tube tha suites the utilisation (please, contact the manifacturer).

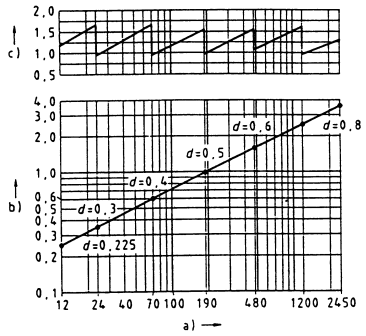

Fig. 4

Key

a) Heat output in kW

b) Length of the flame tube in meters

c) Flame tube firing intensity in MW/m^3

d) Combustion chamber diameter (m)

Fig. 4 - Firing intensity, diameter and lenght of the test flame tube as a function of the heat input in kW.

Country and usefulness gas categories

GAS CATEGORY	COUNTRY																								
I_{2H}	AT	ES	GR	SE	FI	IE	HU	IS	NO	CZ	DK	GB	IT	PT	CY	EE	LV	SI	MT	SK	BG	LT	RO	TR	CH
I_{2E}	LU	PL	-	-	-	-	-	-	-	-	-	-	-	-	-	-	-	-	-	-	-	-	-	-	-
$I_{2E(R)B}$	BE	-	-	-	-	-	-	-	-	-	-	-	-	-	-	-	-	-	-	-	-	-	-	-	-
(*) I_{2EK}	NL	-	-	-	-	-	-	-	-	-	-	-	-	-	-	-	-	-	-	-	-	-	-	-	-
I_{2ELL}	DE	-	-	-	-	-	-	-	-	-	-	-	-	-	-	-	-	-	-	-	-	-	-	-	-
I_{2Er}	FR	-	-	-	-	-	-	-	-	-	-	-	-	-	-	-	-	-	-	-	-	-	-	-	-

(*) Only for I_{2EK} : the appliance was configured for the appliance category K (I2K) and is suitable for the use of G and G+ distribution gases according to the specifications as included in the NTA 8837:2012 Annex D with a Wobbe index of 43.46 – 45.3 MJ/m3 (dry, 0 °C, upper value) or 41.23 – 42.98 (dry, 15 °C, upper value). This appliance can moreover be converted and/or be calibrated for the appliance category E (I2E). This therefore implies that the appliance “is suitable for G+ gas and H gas or is demonstrably suitable for G+ gas and can demonstrably be made suitable for H gas” within the meaning of the “Dutch Decree of 10 May 2016 regarding amendment of the Dutch Gas Appliances Decree and the Dutch Commodities (Administrative Fines) Act in connection with the changing composition of gas in the Netherlands as well as technical amendment of some other decrees.

Technical Specifications

BURNERS		NG550 M-.xx.. 0.25	NG550 M.xx... 0.32	NG550 M.xx... 0.40	NG550 M.xx... 0.50	LG550 L-.xx.. 0.25	LG550 L-.xx... 0.32	LG550 L-.xx... 0.40	LG550 L-.xx... 0.50
Output	min. - max kW	160 - 570							
Fuel		Natural gas				L.P.G.			
Gas category		(see next paragraph)				$I_{3B/P}$			
Gas rate	min.- max Stm^3/h	17 - 60				6.2 - 22			
Gas pressure	min. - max. mbar	(see Note 2)							
Power supply		230V - 50Hz							
Auxiliary Power supply		110 V 2~ 50 Hz							
Total power consumption	kW	0.92							
Electric motor	kW	0.62							
Protection		IP40							
Approx. weight	kg	55							
Valves size / Gas connection		1" / Rp 1	1"1/4 /Rp 1 1/4	1"1/2 / Rp 1 1/2	2" / Rp 2	1" / Rp 1	1"1/4 / Rp 1 1/4	1"1/2 / Rp 1 1/2	2" / Rp 2
Operation		Double stage - Progressive - Fully-modulating							
Operating temperature	°C	-10 ÷ +50							
Storage Temperature	°C	-20 ÷ +60							
Working service*		IntermittentIntermitent							

Low NOx burners

BURNERS		NGX550 M-.xx... 0.25	NGX550 M-.xx... 0.32	NGX550 M-.xx... 0.40	NGX550 M-.xx... 0.50	LGX550 L-.xx... 0.25	LGX550 L-.xx... 0.32	LGX550 L-.xx... 0.40	LGX550 L-.xx... 0.50
Output	min. - max kW	132 - 490							
Fuel		Natural gas				L.P.G.			
Gas category		(see next paragraph)				$I_{3B/P}$			
Gas rate	min.- max Stm^3/h	14 - 52				4,9 - 18,3			
Gas pressure	min. - max. mbar	(see Note 2)							
Power supply		230V - 50Hz							
Auxiliary Power supply		110 V 2~ 50 Hz							
Total power consumption	kW	0.92				0.92			
Electric motor	kW	0.62				0.62			
Protection		IP40				IP40			
Approx. weight	kg	55				55			
Valves size / Gas connection		1" / Rp 1	1"1/4 / Rp 1 1/4	1"1/2 / Rp 1 1/2	2" / Rp 2	1" / Rp 1	1"1/4 / Rp 1 1/4	1"1/2 / Rp 1 1/2	2" / Rp 2
Operation		Double stage - Progressive - Fully-modulating							
Operating temperature	°C	-10 ÷ +50							
Storage Temperature	°C	-20 ÷ +60							
Working service*		Intermitent							

Note1:	**All gas flow rates are referred to Stm^3/h (1013 mbar absolute pressure, 15 °C temperature) and are valid for G20 gas (nett calorific value H_i = 34.02 MJ/Stm^3); for L.P.G. (nett calorific value H_i = 93.5 MJ/Stm^3)**
Note2:	**Maximum gas pressure = 360mbar (with Dungs MBDLE valves)** **Minimum gas pressure = see gas curves.**

*** NOTE ON THE WORKING SERVICE: LMV2 automatically stops after 24h of continuous working. The device immediately starts up, automatically. LMV3 performs countinuous operation.**

ATTENTION : THE BURNER CAN BE SUPPLIED WITH SOME CUSTOMIZATIONS

Version with LMV37.400 - possibility of modifying the "continuous duty" parameter
- modulation with 4-20 mA input signal possible
Version with LMV27.100 / LMV37.400 - Modbus communication with BMS possible with OCI accessory 410.12

Performance curves

NG550 - LG550 Double-stage/Progressive

NGX550 Low NOx burner

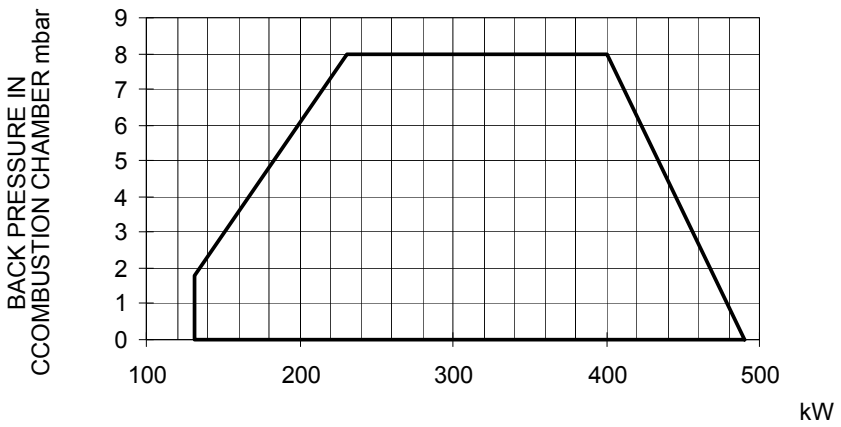

To get the input in kcal/h, multiply value in kW by 860.

Data are referred to standard conditions: atmospheric pressure at 1013mbar, ambient temperature at 15°C.

NOTE: The performance curve is a diagram that represents the burner performance in the type approval phase or in the laboratory tests, but does not represent the regulation range of the machine. On this diagram the maximum output point is usually reached by adjsuting the combustion head to its “MAX” position (see paragraph “Adjusting the combustion head”); the minimum output point is reached setting the combustion head to its “MIN” position. During the first ignition, the combustion head is set in order to find a compromise between the burner output and the generator specifications, that is why the minimum output may be different from the Performance curve minimum

The values in the diagrams refer to **natural gas** with a calorific value of 8125 kcal/Stm^3 (15°C, 1013 mbar) and a density of 0.714 kg/Stm^3 .

The values in the diagrams refer to **GPL** with a calorific value of 22300 kcal/Stm^3 (15°C, 1013 mbar) and a density of 2.14 kg/Stm^3. When the calorific value and the density change, the pressure values should be adjusted accordingly.

$$\Delta p2 = \Delta p1 \quad * \left(\frac{Q2}{Q1}\right)^2 * \left(\frac{\rho 2}{\rho 1}\right)$$

Where:

$p1$	Natural gas pressure shown in diagram
$p2$	Real gas pressure
$Q1$	Natural gas flow rate shown in diagram
$Q2$	Real gas flow rate
$\rho 1$	Natural gas density shown in diagram
$\rho 2$	Real gas density

Pressure in the network/gas rate curves

- **Natural gas burners**

NG550 Progressive

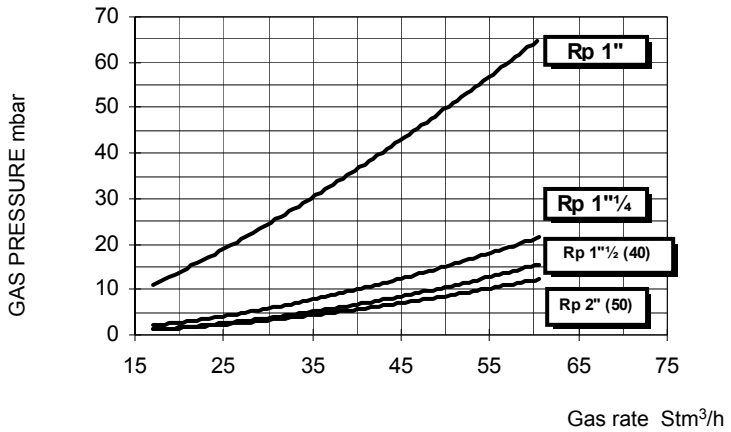

- **L.P.G. Burners**

LG550 Double-stage/Progressive

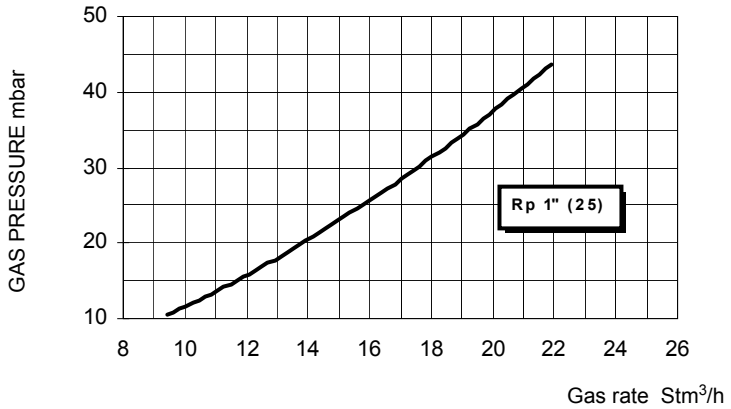

LG550Double-stage/Progressive

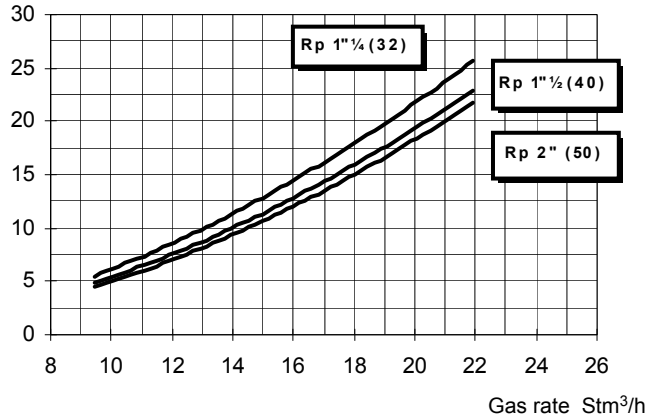

- **Low NOx burners**

NGX550 Progressive

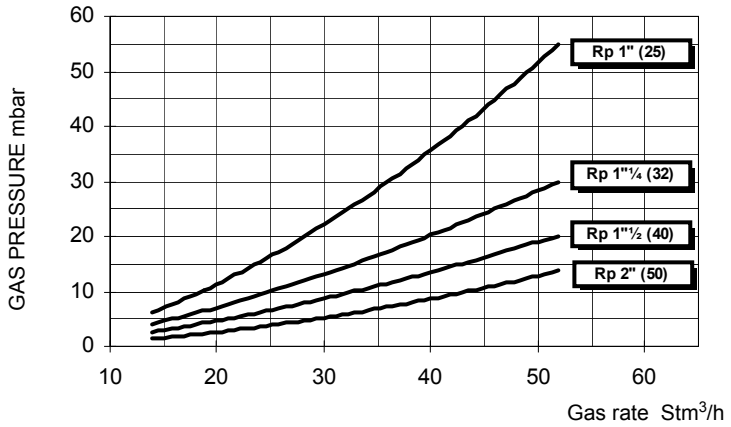

Caution: the gas rate value is quoted on the x-axis, the related network pressure is quoted on the y-axis (pressure value in the combustion chamber is not included). To know the minimum pressure at the gas train inlet, necessary to get the requested gas rate, add the pressure value in the combustion chamber to the value read on the y-axis.

Overall dimensions (mm)

- ***Standard burners***

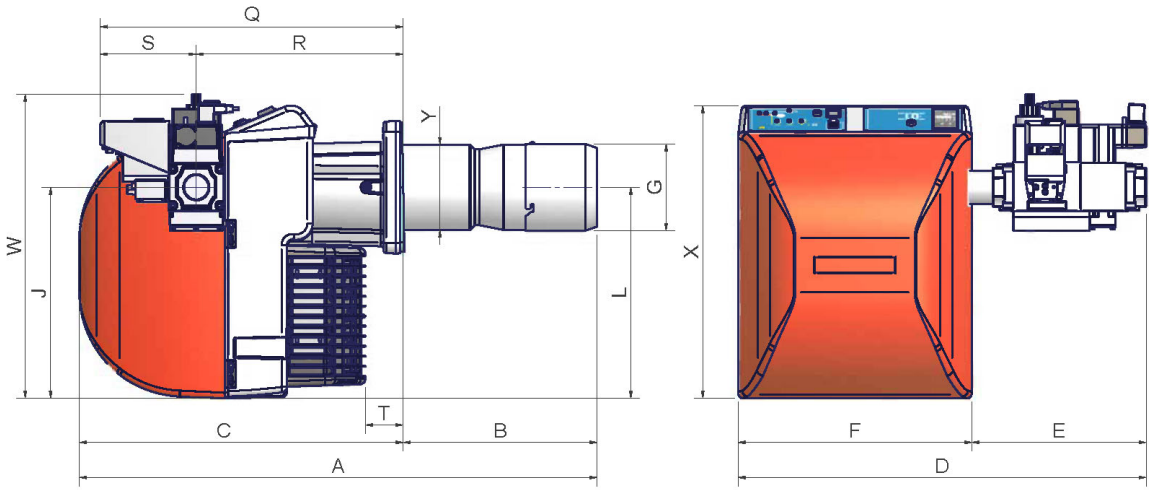

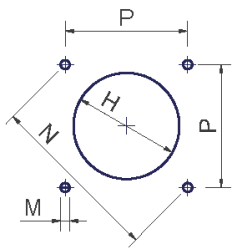

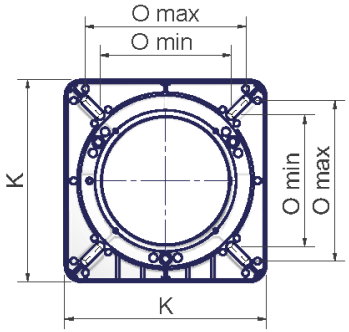

Boiler drilling plate and burner flange

	DN	AS*	AL*	BS*	BL*	C	D ±5mm	E ±5mm	F	G	H	J	K	L	M	N	Omin	Omax	P	Q	R	S	T	W	X	Y
NG/LG550	25/32	843	943	253	353	590	715	232	426	165	178	384	241	384	M10	246	157	192	174	552	377	175	69	543	533	155
NG/LG550	40	843	943	253	353	590	820	337	426	165	178	384	241	384	M10	246	157	192	174	552	377	175	69	553	533	155
NG/LG550	50	843	943	253	353	590	820	337	426	165	178	384	241	384	M10	246	157	192	174	552	377	175	69	603	533	155

* S = standard blast tube
L = extended blast tube

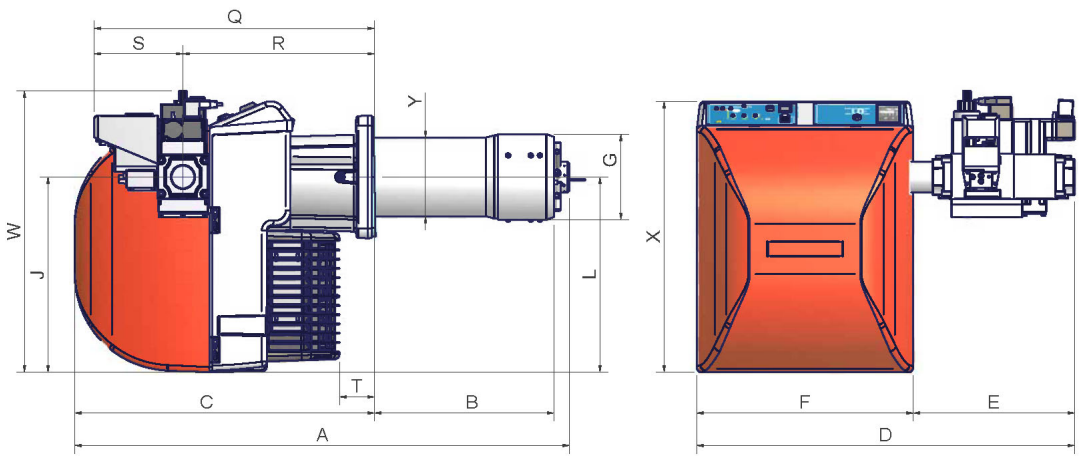

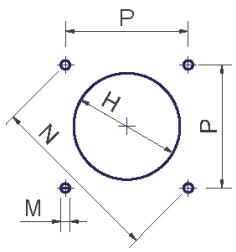

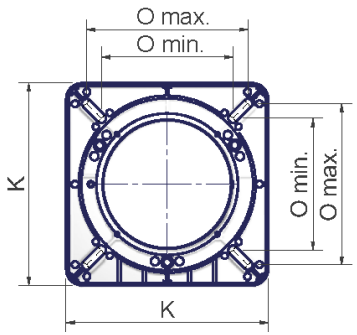

Boiler drilling plate and burner flange

	DN	AS*	AL*	BS*	BL*	C	D ±5mm	E ±5mm	F	G	H	J	K	L	M	N	Omin	Omax	P	Q	R	S	T	W	X	Y
NGX550-LGX550	25/32	874	974	253	353	590	715	232	426	176	198	384	241	384	M10	246	157	192	174	552	377	175	69	543	533	168
	40	874	974	253	353	590	820	337	426	176	198	384	241	384	M10	246	157	192	174	552	377	175	69	553	533	168
	50	874	974	253	353	590	820	337	426	176	198	384	241	384	M10	246	157	192	174	552	377	175	69	603	533	168

* S = standard blast tube
L = extended blast tube

MOUNTINGS AND CONNECTIONS

Packing

urners are despatched in cardboard packages whose dimensions are: 1030mm x 530mm x 570mm (L x P x H)

Packing cases of this type are affected by humidity; the maximum number of cases to be stacked is showed outside the packing.

The following are placed in each packing case.

- Burner with gas train;
- gasket to be inserted between the burner and the boiler;
- envelope containing this manual

When disposing of the burner packing and if the packing is scrapped follow the procedures laid down in the current legislation regarding the disposal of materials.

Fitting the burner to the boiler

To install the burner into the boiler, proceed as follows:

1 make a hole on the closing door of the combustion chamber as described on paragraph “Overall dimensions”)
2 place the burner to the boiler: lift it up and handle it according to the procedure described on paragraph “Handling the burner”;
3 place the stud bolts (5) on boiler’s door, according to the burner drilling template described on paragraph “Overall dimensions”;
4 fasten the stud bolts;
5 place the gasket on the burner flange;
6 install the burner into the boiler;
7 fix the burner to the stud bolts, by means of the fixing nuts, according to the next picture.
8 After fitting the burner to the boiler, ensure that the gap between the blast tube and the refractory lining is sealed with appropriate insulating material (ceramic fibre cord or refractory cement).

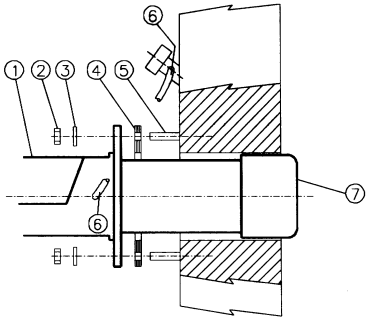

Keys

1 Burner
2 Fixing nut
3 Washer
4 Sealing gasket
5 Stud bolt
7 Blast tube

The burner is designed to work positioned according to the picture below. For different installations, please contact the Technical Department.

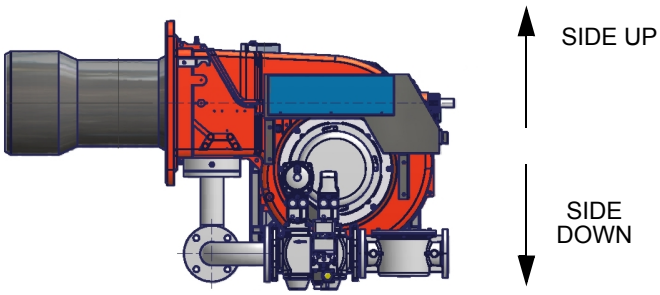

GAS TRAIN CONNECTIONS

This paragraph shows the gas train components which are included in the delivery and those which must be fitted by the customer. The diagram complies with regulations in force

⚠	**ATTENTION:** BEFORE EXECUTING THE CONNECTIONS TO THE GAS PIPE NETWORK, BE SURE THAT THE MANUAL CUTOFF VALVES ARE CLOSED. READ CAREFULLY THE “WARNINGS” CHAPTER AT THE BEGINNING OF THIS MANUAL.

Gas train with valves group MB-DLE (2 valves + gas filter + pressure governor) + VPS504 gas proving system

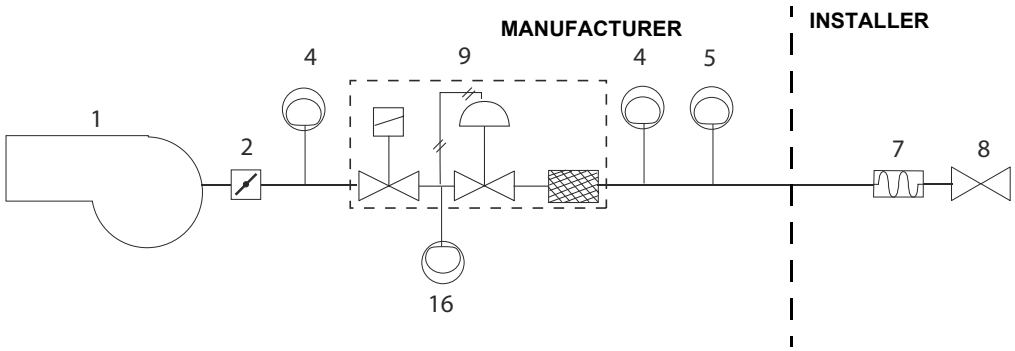

Key

1 Burner
2 Butterfly valve
4 High gas pressure switch (option*)
5 Low gas pressure switch
7 Bellows unit
8 Manual cutoff valve
9 MB-DLE valve group
16 Gas leakage pressure switch (PGCP)

Note: the maximum gas pressure switch can be mounted either upstream or downstream the gas valve but upstream the butterfly gas valve (see item no.4 in the scheme above).

To mount the gas train, proceed as follows:

1) in case of threaded joints: use proper seals according to the gas used;
2) fasten all the items by means of screws, according to the next diagrams, observing the mounting direction for each item.

NOTE: the bellow joint, the manual valve and the gaskets are not part of the standard supply.

The procedures of installation fo the gas valves are shown in the next paragraph.

⚠	**ATTENTION:** once the gas train is mounted according to the diagram, the gas proving test mus be performed, according to the procedure set by the laws in force.

ATTENTION: it is recommended to mount filter and gas valves to avoid that extraneous material drops inside the valves, during maintenance and cleaning operation of the filters (both the filters outside the valves group and the ones built-in the gas valves).

MULTIBLOC DUNGS MB-DLE 405..412

Mounting

1. Mount flange onto tube lines: use appropriate sealing agent (see Fig. 7);
2. insert MB-DLE: note position of O rings (see Fig. 7);
3. tighten screws A, B, C and D (Fig. 5 - Fig. 6), accordind to the mounting positions (Fig. 8);
4. after installation, perform leakage and functional test;
5. disassembly in reverse order.

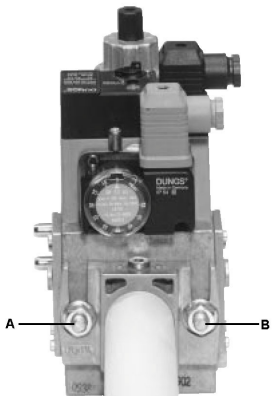

Fig. 5

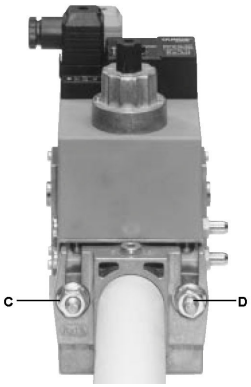

Fig. 6

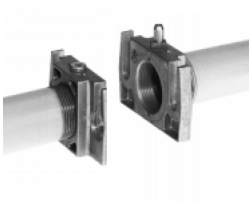

Fig. 7

MOUNTING POSITIONS

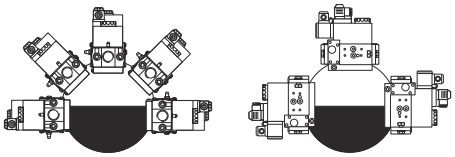

Fig. 8

MULTIBLOC DUNGS MB-DLE 415..420

Mounting

1. Loosen screws A and B **do not** unscrew (Fig. 5 - Fig. 6).
2. unscrew screws C and D (Fig. 5 - Fig. 6).
3. Remove MultiBloc between the threaded flanges (Fig. 6).
4. After mounting, perform leakage and functional tests.

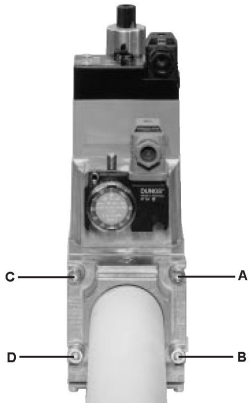

Fig. 9

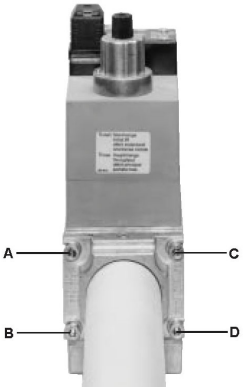

Fig. 10

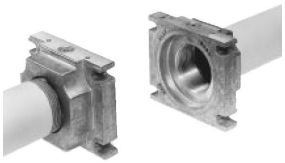

Fig. 11

MOUNTING POSITIONS

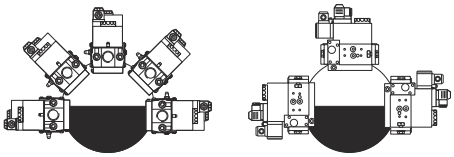

Fig. 12

Once the train is installed, connect the gas valves group plug.

⚠	**ATTENTION:** once the gas train is mounted according to the diagram, the gas proving test mus be performed, according to the procedure set by the laws in force.

ELECTRICAL CONNECTIONS

	Respect the basic safety rules. make sure of the connection to the earthing system. do not reverse the phase and neutral connections. fit a differential thermal magnet switch adequate for connection to the mains.
	ATTENTION: before executing the electrical connections, pay attention to turn the plant's switch to OFF and be sure that the burner's main switch is in 0 position (OFF) too. Read carefully the chapter "WARNINGS", and the "Electrical connections" section.

WARNING: the burner is fitted with a bridge between terminals T6 and T8 on CN2-TAB connector (external side link, male connector); remove this bridge before thermostat connection.

To execute the electrical connections, proceed as follows:

1 find the plug or the plugs, according to the model:
- 7 poles plug for the power supply (for all models);
- 4 poles plug (progressive burners);
- 3-poles plug;

2 execute the electrical connections to the plugs, according to hte burner model (see next paragraph);

3 once all the connections are accomplished, check the fan motor direction (sse next paragraphs);)

4 now the burner is ready to start up.

Identification of linking connectors

Burner power supply connector (Fig. 16) **Probe connection connector** (**fully modulating burners**, Fig. 18)	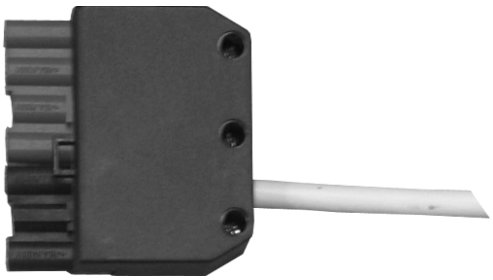 Fig. 13
HIGH/LOW flame connector (progressive burners , Fig. 16)	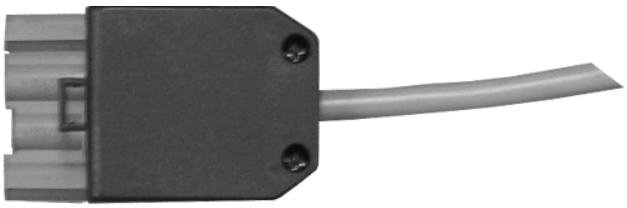 Fig. 14
Fan motor connector (Fig. 17)	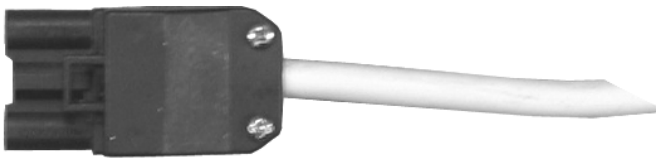 Fig. 15

WARNING: before operating the burner, be sure all connectors are linked as shown in the diagrams.

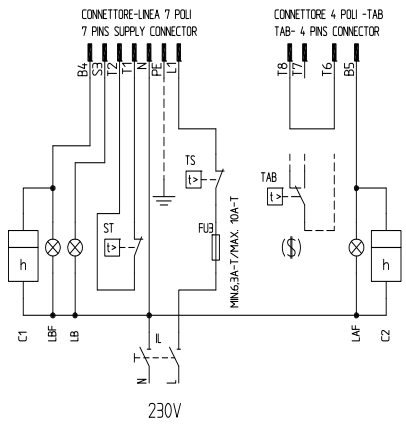

Fig. 16 - 7-poles and 4-poles connectors

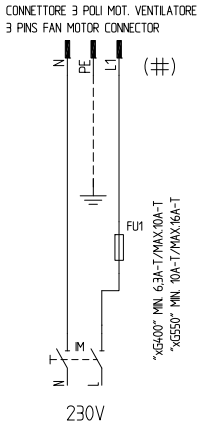

Fig. 17 - Electric motor 3-poles connector

Key

C1	LOW FLAME TIME METER
C2	HIGH FLAME TIME METER
FU1	FAN MOTOR LINE FUSE
FU3	LINE FUSE
IL	BURNER LINE SWITCH
IM	FAN MOTOR LINE SWITCH
KM1	FAN MOTOR CONTACTOR
LAF	BURNER IN HIGH FLAME INDICATOR LIGHT
LB	INDICATOR LIGHT FOR BURNER LOCK-OUT
LBF	BURNER IN LOW FLAME SIGNALLING LAMP
MV	FAN MOTOR
ST	THERMOSTATS O PRESSURE SWITCHES SERIE
TAB	HIGH LOW FLAME THERMOSTAT/PRESSURE SWITCH
TS	SAFETY THERMOSTAT/PRESSURE SWITCH

CONN-MOTORE FAN MOTOR CONNECTOR

CONN-LINEA BURNER POWER SUPPLY CONNNECTOR

CONN-TAB HIGH-LOW FLAME CONNECTOR

($) IF "TAB" USED REMOVE THE BRIDGE BETWEEN TERMINALS T6-T8

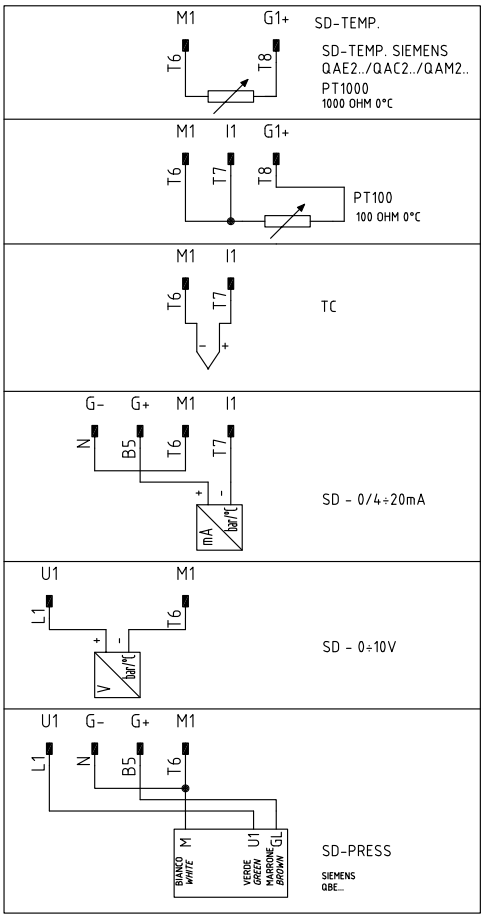

Fig. 18 - Probes connection

Key

C1	LOW FLAME TIME METER
FU1	LINE FUSE FOR FAN MOTOR
FU3	LINE FUSE
FU4	AUXILIARY FUSE
IL	BURNER LINE SWITCH
IM	FAN MOTOR LINE SWITCH
KM1	FAN MOTOR REMOTE CONTACTOR
SIEMENS RWF40	MODULATION REGULATOR
LB	BURNER LOCKOUT SIGNALLING LAMP
LBF	BURNER IN LOW FLAME SIGNALLING LAMP
MV	FAN MOTOR
SD-0÷10V	VOLTAGE SIGNAL
SD-0/4÷20mA	CURENT SIGNAL
SD-PRESS	PRESSURE PROBE
SMA	MAN/AUTO SELECTOR
SMF	OPERATION SELECTOR MIN-0-MAX
ST	PRESSURE SWITCHES OR THERMOSTATS SERIE
TS	SAFETY THERMOSTAT/PRESSURE SWITCH

Note on elecrtical supply

If the power supply to the burner is 230V three-phase or 230V phase-phase (without a neutral), with the Siemens LMV2... control box, between the terminal 2 on the board and the earth terminal, an RC Siemens RC466890660 filter must be inserted.

Key

C - Capacitor (22nF/250V)

LME - Siemens control box

R - Resistor (1Mohm)

RC466890660 - RC Siemens filter

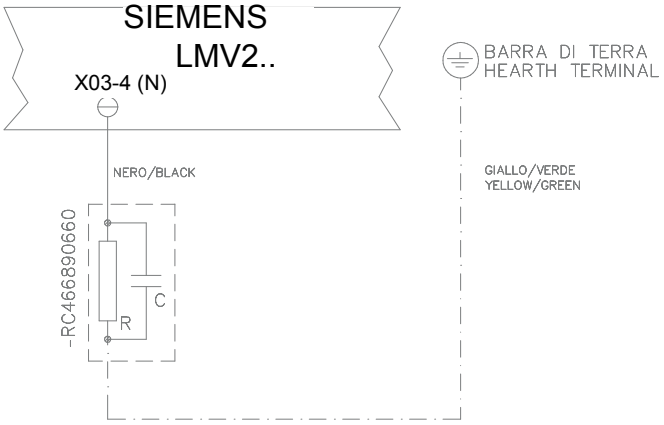

Fig. 19

User interface

The AZL2x.. display is shown below:***User interface***

The AZL2x.. display is shown below:
The keys functions are the following:

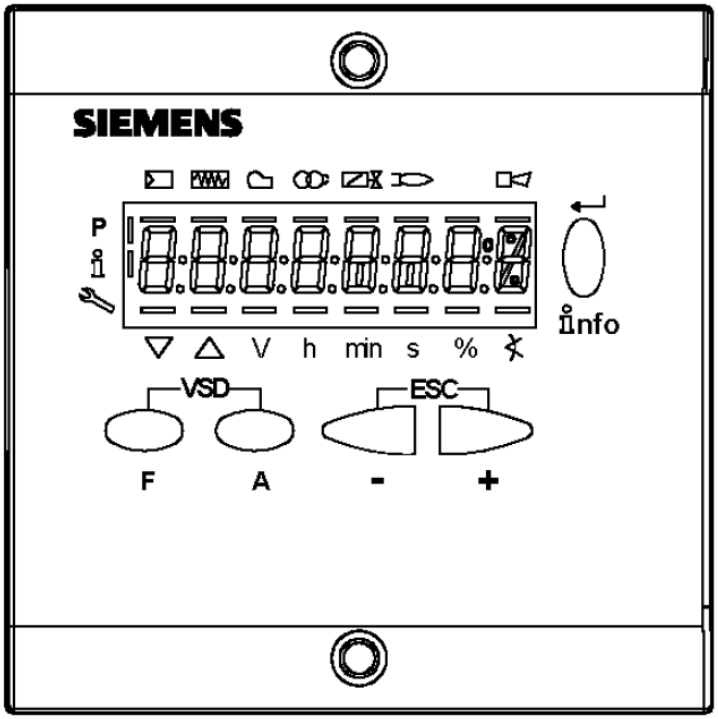

Key F
Used to adjust the “fuel” actuator position (**F**uel): :
While pressing the **F** key, the “fuel” actuator position can be changed by means of the **+** and **-** keys.

Key A
Used to adjust the “air” actuator position (**A**ir):
While pressing the **A** key, the “air” actuator position can be changed by means of the **+** and **-** keys.

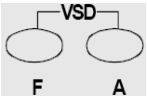

Key F + A
While pressing the two keys contemporarly, the **code** message will appear: by entering the proper password it is possible to access the **Service** mode.

Info and Enter keys
Used for **Info** and **Service** menues
Used as **Enter** key in the setting modes
Used as **Reset** key in the burner operation mode
Used to enter a lower level menu

-Key -
Used to decrease a a value
Used to enter Info and Serivce during the curve adjustments

+Key +
Used to increase a a value
Used to enter Info and Serivce during the curve adjustments

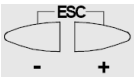

Keys (+ & -)= ESC
By pressing + and - at the same time, the ESCAPE function is perfomed:

to enter a lower level menu

The display will show these data:

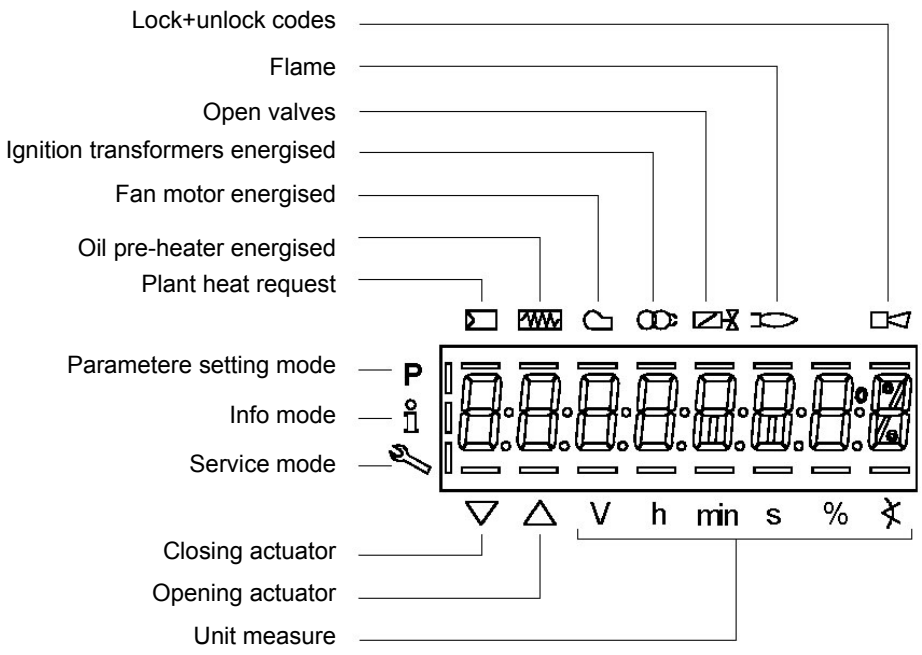

The display will show these data:

Setting menu

The setting menu is divided into different blocks:

Bloc.	Descrizione	Description	Password
100	Informazioni generali	General	OEM / Service / Info
200	Controllo bruciatore	Burner control	OEM / Service
400	Curve rapporto	Ratio curves	OEM / Service
500	Controllo rapporto	Ratio control	OEM / Service
600	Servocomandi	Actuators	OEM / Service
700	Storico errori	Error history	OEM / Service / Info
900	Dati di processo	Process data	OEM / Service / Info

The accesses to the various blocks are allowed by passwords. Passwords are divided into three levels:

- User level (info): no password needed
- Service level (Service)
- Manifacturer level (OEM)

PHASES LIST

During operation, the following program phases are shown. The meaning for each phase is quoted in the table below

Fase / Phase	Funzione	Function
Ph00	Fase blocco	Lockout phase
Ph01	Fase di sicurezza	Safety phase
Ph10	t10 = tempo raggiungimento posizione riposo	t10 = home run
Ph12	Pausa	Standby (stationary)
Ph22	t22 = tempo di salita ventilatore (motore ventilatore = ON, valvola intercetta-zione di sicurezza = ON)	t22 = fan ramp up time (fan motor = ON, safety shutoff valve = ON)
Ph24	Verso posizione preventilazione	Traveling to the prepurge position
Ph30	t1 = tempo preventilazione	t1 = prepurge time
Ph36	Verso posizione accensione	Traveling to the ignition position
Ph38	t3 = tempo preaccensione	t3 = preignition time

Ph40	TSA1 = primo tempo sicurezza (trasformatore accensione ON)	TSA1= 1st safety time (ignition transformer ON)
Ph42	TSA1 = primo tempo sicurezza (trasformatore accensione OFF)	TSA1 = 1st safety time (ignition transformer OFF) t42 = preignition time OFF
Ph44	t44 = intervallo 1	t44 = interval 1
Ph50	TSA2 = secondo tempo sicurezza	TSA2 = 2nd safety time
Ph52	t52 = intervallo 2	t52 = interval 2
Ph60	Funzionamento 1 (stazionario)	Operation 1 (stationary)
Ph62	t62 = massimo tempo bassa fiamma (funzionamento 2, in preparazione per spegnimento, verso bassa fiamma)	t62 = max. time low-fire (operation 2, preparing for shutdown, traveling to low-fire)
Ph70	t13 = tempo postcombustione	t13 = afterburn time
Ph72	Verso posizione postcombustione	Traveling to the postpurge position
Ph74	t8 = tempo postventilazione	t8 = postpurge time
Ph80	t80 = tempo evacuazione controllo tenuta valvole	t80 = valve proving test evacuation time
Ph81	t81 = tempo perdita pressione atmosferica, prova atmosferica	t81 = leakage time test time atmospheric pressure, atmospheric test
Ph82	t82 = test perdita, test riempimento	t82 = leakage test filling test, filling
Ph83	t83 = tempo perdita pressione gas, test pressione	t83 = leakage test time gas pressure, pressure test
Ph90	Tempo attesa “mancanza gas”	Gas shortage waiting time

Entering the Parameter levels

By means of a proper use of the keys, it is possible to enter the various level parameters, as shown in the following flow chart:

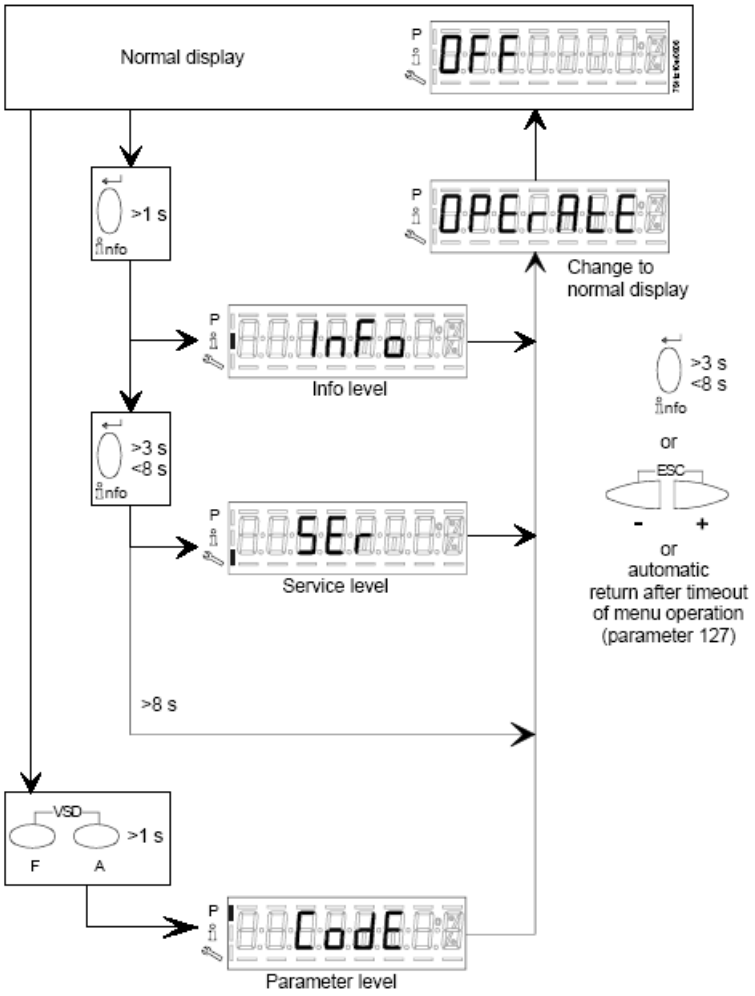

The burner and consequently the LMV2x.. are factory set; the air and fuel curves as set as well.

Info level

To enter the **Info** level, proceed as follows:

1 in any menu position, press keys **+** and **-** at the same time, then the program will start again: the display will show **OFF**.

2 until the display will show **InFo**, Press the **enter (InFo)** key

3 then il will show the first code (167) flashing, on the right side it will show the data entered. By pressing **+** or **-** it is possible to scroll (up or down) the parameter list.

4 If a dot-line is shown on the right, there is no enough room for complete visualisation: press **enter** again the data will be completely shown for 1 to 3 seconds. By pressing **enter** or **+** and**-** at the same time, the system will exit the parameter visualisation and go back to the flashing number.

The **Info** level shows some basic parameters as:

Parameter	***Description***
167	Cubic meters of fule (resettable)
162	Operating hours (resettable)
163	Device operating hours
164	Burners start-ups (resettable)
166	Total number of start-ups
113	Burner number (i.e. serial number)
107	Software version
102	Software date
103	Device serial number
104	Customer code
105	Version
143	Free

5 Example: choose parameter 102 to show the date

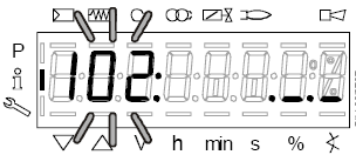

the display shows parameter **102** flashing on the left and characters **._._** on the right.

6 press InFo for 1-3 seconds: the date will appear

7 press InFo to go back to parameter “102”

8 by pressing + / -, it is possible to scroll up/down the parameter list (see table above), or, by pressing ESC or InFo for more seconds, the display will show

9 Once the last parameter is accessed (143) by pressing **+** , the **End** message will flash.

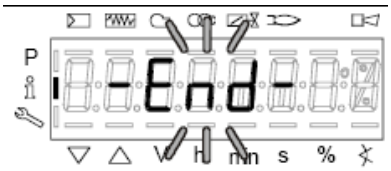

10 Press **InFo** for more than three seconds or for more than three seconds orto return to the normal display.

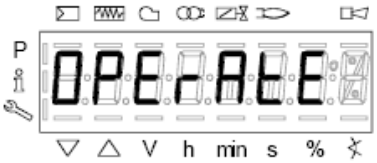

If a message like the one below is shown during operation,

it means that the burner is locked out and the Errore code is shown (in the example “error code:4”); this message is alternating with another message

Diagnostic code (in the example “diagnostic code:3”). Record the codes and find out the fault in the Error table.
To perform the reset, press InFo for one second:

The unit displays an event which does not lead to shutdown.
The display shows current error code **c:** alternating with diagnostic code **d**:

.
Press **InFo** to return to the display of phases.
Example: Error code **111** / diagnostic code 0

To reset, press InFo for a second. Record the codes and check the Error List to find the type of faults.

Service level
To enter the Service mode, press InFo until the display will show:

The service level shows all the information about flame intensity, actuators position, number and lock codes:

Parameter	***Description***
954	Flame intensity
121	% output, if set = automatic operation
922	Actuators position, 00=combustibile; 01= aria
161	Lock-outs number
701..725	Lock-outs History (see chapter 23 in the LMV2x manual)

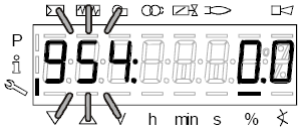

1 .the first parameter will be “954”: the percentage of flame is shown on the right. By pressinf + or - it is possible to scroll up/down the parameter list.

2 Once the last parameter is accessed (143) by pressing **+** , the **End** message will blink.

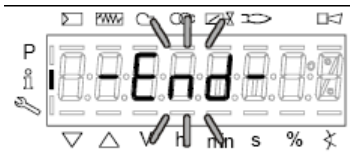

3 Press **InFo** for more than three seconds or for more than three seconds orto return to the normal display.

For further nformation, see tha LMV2 related manual.

●

PHASES LIST During operation, the following program phases are shown. The meaning for each phase is quoted in the table below***Info levelCombustion head pressure curves vs. the gas flow rate***

Curves are referred to pressure= 0mbar in the combustion head!

The curves referred to the gas pressure in the combustion head, depending on the gas flow rate, are referred to the burner in the combustion stage (percentage of residual O_2 in the flues as shown in the “Recommended combustion values” table and CO in the standard limits). During this stage, the combustion head, the gas butterfly valve and the servocontrol are at the maximum opening. Refer to Fig. 20, showing the correct way to measure the gas pressure, considering the values of pressure in combustion chamber, surveyed by means of the pressure gauge or taken from the boiler’s Technical specifications.

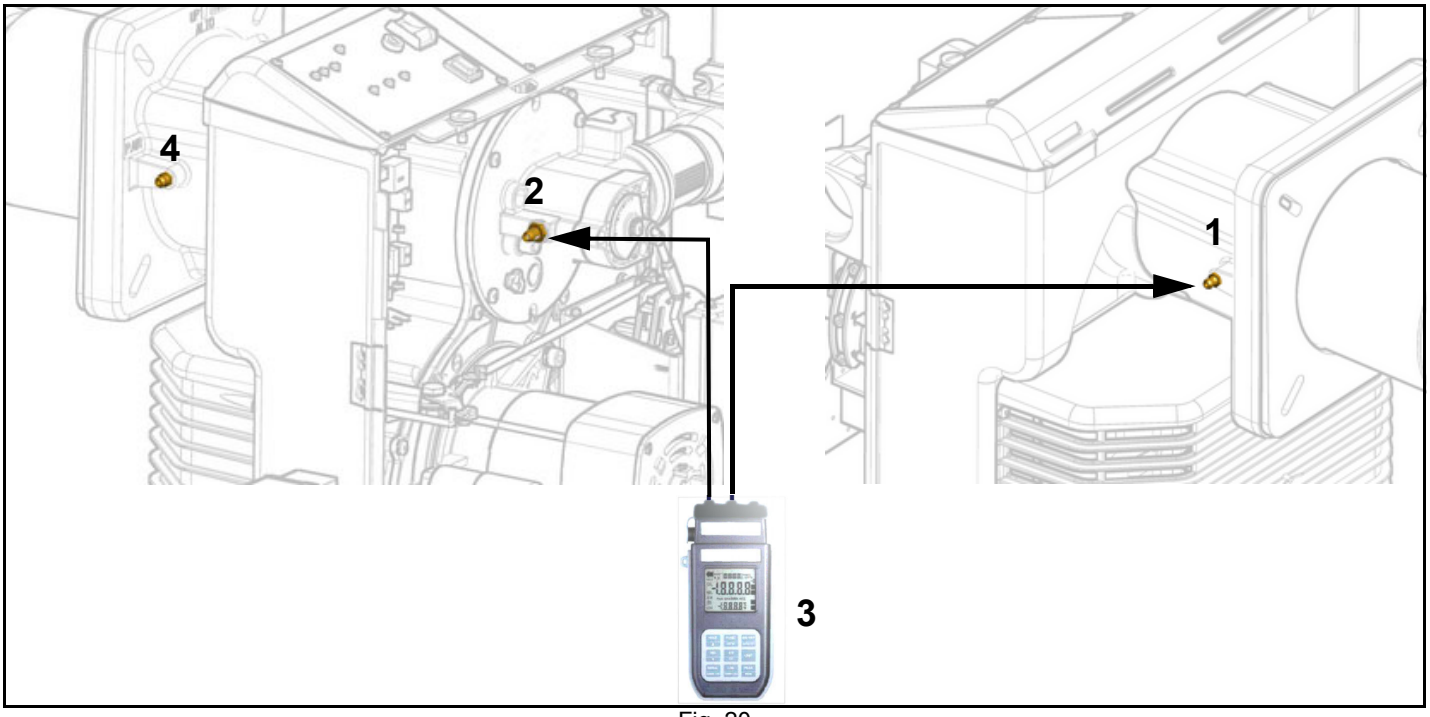

Fig. 20

Key

1 Pressure outlet on the combustion chamber
2 Gas pressure outlet on the butterfly valve
3 Differential pressure gauge
4 Fan air pressure plug

Measuring the gas pressure in the combustion head

In order to measure the pressure in the combustion head, insert the pressure gauge probes: one into the generator’s pressure outlet to get the pressure in the combustion chamber and the other one into the butterfly valve’s pressure outlet of the burner (Fig. 20-3). On the basis of the measured differential pressure, it is possible to get the maximum flow rate: in the pressure - rate curves (showed on the next paragraph), it is easy to get the burner output in kW or Stm3/h (quoted on the x axis) from the pressure measured in the combustion head (quoted on the y axis).

NOTE: THE PRESSURE-RATE CURVES ARE APPROXIMATE; FOR A PROPER SETTING OF THE GAS RATE, PLEASE REFER TO THE GAS METER READING.

Plugs for pressure measurement

To measure the pressure in the combustion chamber, as far as this series, a pressure plug is provided upstream the burner’s blast tube.

Fan air pressure plug

Pressure in combustion chamber plug

The values in the diagrams refer to **natural gas** with a calorific value of 8125 kcal/Stm^3 (15°C, 1013 mbar) and a density of 0.714 kg/Stm^3 .

The values in the diagrams refer to **GPL** with a calorific value of 22300 kcal/Stm^3 (15°C, 1013 mbar) and a density of 2.14 kg/Stm^3. When the calorific value and the density change, the pressure values should be adjusted accordingly.

$$\Delta p2 = \Delta p1 \quad * \left(\frac{Q2}{Q1}\right)^2 * \left(\frac{\rho 2}{\rho 1}\right)$$

Where:

$p1$ Natural gas pressure shown in diagram
$p2$ Real gas pressure
$Q1$ Natural gas flow rate shown in diagram
$Q2$ Real gas flow rate
$\rho 1$ Natural gas density shown in diagram
$\rho 2$ Real gas density

Gas pressure in combustion head vs. gas flow rate curves

NGX550

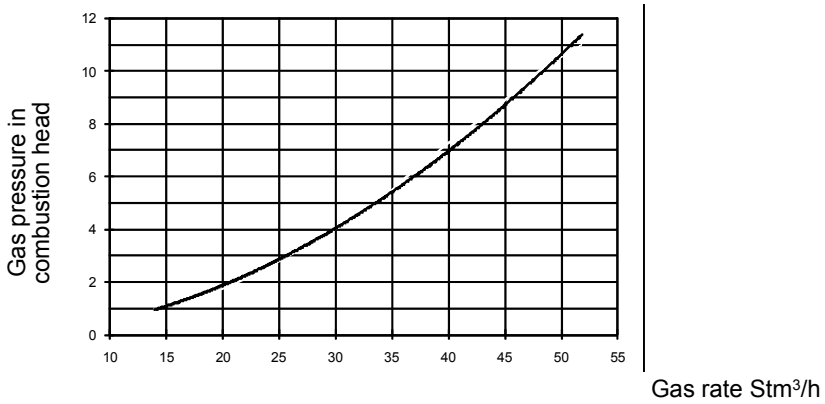

NG550

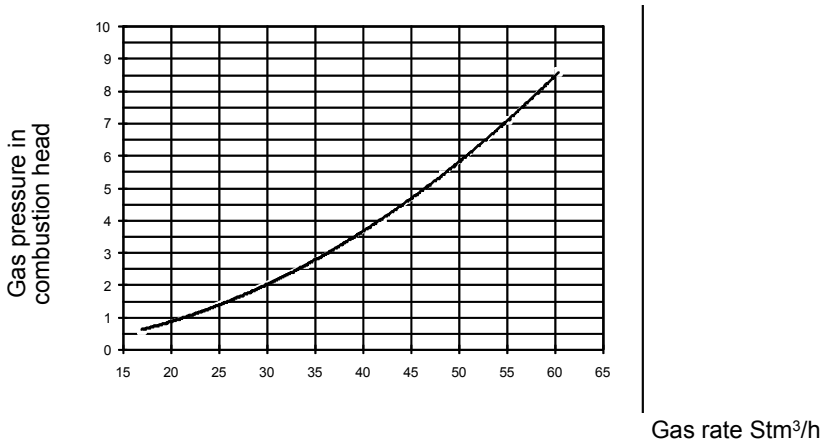

LG550 L.P.G.

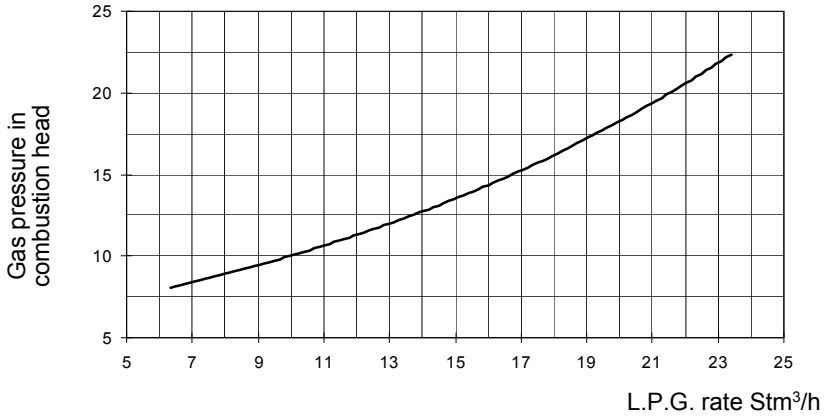

⚠	***ATTENTION:*** **before starting the burner up, be sure that the manual cutoff valves are open and check that the pressure upstream the gas train complies the value quoted on paragraph "Technical specifications". Be sure that the mains switch is closed.**
	ATTENTION: During commissioning operations, do not let the burner operate with insufficient air flow (danger of formation of carbon monoxide); if this should happen, make the gas decrease slowly until the normal combustion values are achieved.
	WARNING: NEVER LOOSE THE SEALED SCREWS! OTHERWISE, THE DEVICE WARRANTY WILL BE INVALIDATE!

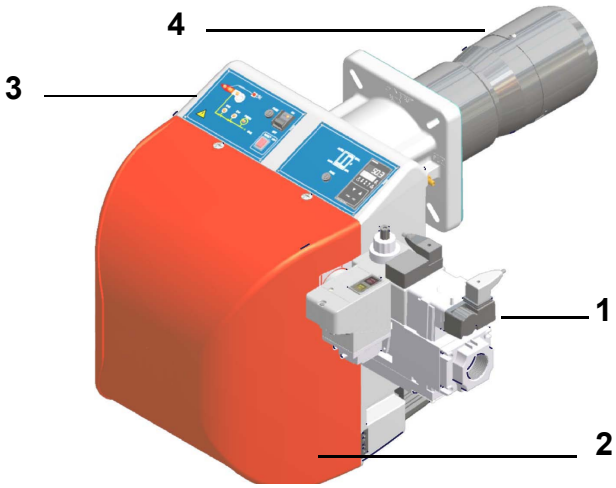

Keys

1 Valve group
2 Cover
3 Control panel
4 Blast tube

To perform the adjustments, unscrew the fixing screws and remove the burner cover.

Startup Output

The start-up heat output shall not exceed 120 kW (single stage burners) or 1/3 of nominal output (double-stage, progressive or fully modulating burners). In order to comply with these requirements, burners are provided with butterfly valve and/or slow-opening safety valve. On double-stage, progressive or modulating burners, the low flame ouptut must be higher than the minimum ouptut quoted in the performance curve (“Gas pressure in combustion head vs. gas flow rate curves” on page 27).

⚠	**IMPORTANT! the combustion air excess must be adjusted according to the in the following chart.**

Recommended combustion parameters		
Fuel	Recommended (%) CO_2	Recommended (%) O_2
Natural gas	9 ÷ 10	3 ÷ 4.8
LPG	11 ÷ 12	2.8 ÷ 4.3

Adjustments - brief description

The air and fuel adjustments must be carried out first at the maximum output (“high flame”): see the LMV2x/LMV3x attached manual.

- Check that the combustion parameters are in the suggested limits.
- Check the flow rate measuring it on the counter or, if it was not possible, verifying the combustion head pressure by means of a differential pressure gauge, as described on par. “Measuring the gas pressure in the combustion head” on page 27.
- Then, adjust the combustion by settin the “air/gas ratio” curvepoints (see the LMV2x/LMV3 attached manual).
- Set, now, the low flame output, in order to avoid the low flame output increasing too much or that the flues temperature gets too low to cause condensation in the chimney.

Adjusting procedure

To change the burner setting during the testing in the plant, follows the next procedure, according to the burner operation.

DUNGS MB-DLE gas valves group: Before starting the burner up, adjust the valves group slow opening: to set the slow opening remove cover **T**, reverse it upside down and use it as a toolto rotate screw **VR**. Decrease the ignition flow rate by screwing, increase it by unscrewing. Do not use a screwdriver on the screw **VR**!

Note: the screw **VSB** must be removed only in case of replacemente of the coil (see picture below).

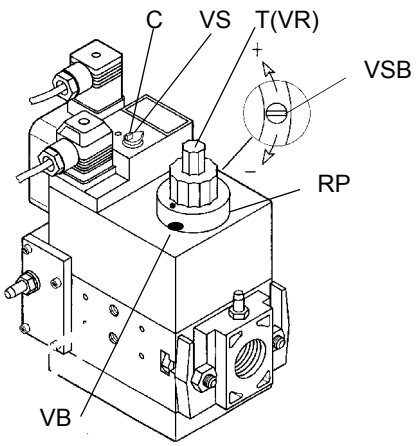

Following the air/fuel ratio curvepoints setting (see the LMV2 manual), go on adjusting air and gas flow rates: check, continuosly, the flue gas analisys, as to avoid combustion with little air; dose the air according to the gas flow rate change following the steps quoted below;

acting on the pressure stabiliser of the valves group, adjust the **gas flow rate in the high flame stage** as to meet the values requested from the boiler/utilisation:

- **Multibloc MB-DLE:** the valve is adjusted by means of the **RP** regulator after slackening the locking screw **VB** by a number of turns. By unscrewing the regulator **RP** the valve opens, screwing the valve closes. The pressure stabilizer is adjusted by operating the screw **VS** located under the cover **C**. By screwing down the pressure is increased and by unscrewing it is reduced. **Note:** the screw **VSB** must be removed only in case of replacemente of the coil.

- Siemens VGD valves group: remove cap **T** and act on the **VR** adjusting screw to increase or decrease the pressure and conse-

quently the gas rate; screwind **VR** the rate increases, unscrewing it decreases (see next figure).

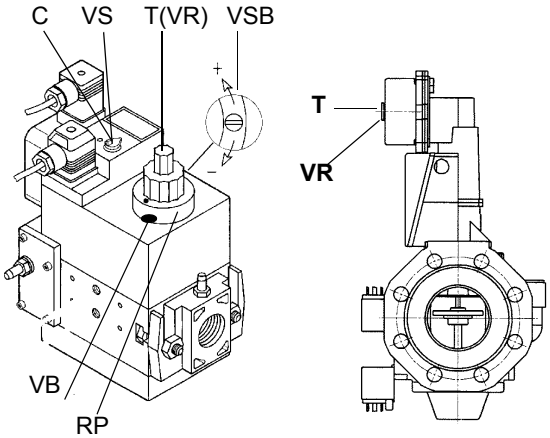

Dungs Multibloc MB-DLE **Siemens VGD..**

⚠ Pressure stabiliser is factory-set. The setting values must be locally adapted to machine conditions. Important! Follow the instructions carefully!

Once the curvepoints are set, adjust the pressure switches (see next par.).

As for the modulating burners, please refer to the related paragraph.

Fully modulating burners

To adjust the fully-modulating burners, use the **CMF** switch on the burner control panel (see next picture), instead of the **TAB** thermostat as described on the previous paragraphs about the progressive burners. Go on adjusting the burner as described before, paying attention to use the CMF switch intead of **TAB**.

The **CMF** position sets the oprating stages: to drive the burner to the high-flame stage, set CMF=1; to drive it to the low-flame stage, set CMF=2.

To move the adjusting cam set CMF=1 or 2 and then CMF=0.

CMF = 0 stop at the current position
CMF = 1 high flame operation
CMF = 2 low flame operation
CMF = 3 automatic operation

As for the modulator setting, please refer to the related documentation.

Adjusting the combustion head

The burner is factory-set with the combustion head at the position that refers to the "MAX" output. The maximum output setting refers to the "fully-ahead" position of the combustion head, as far as standard models (Fig. 23), and to "fully-backward" position for low NOx burners (Fig. 24). As for "fully-ahead" position, it means that the head is towards the boiler, "fully-backward" position means that the head is towards the operator. As far as the reduced output operation, progressively move the combusiton head towards the "MIN" position, rotating clockwise the **VRT** screw (Fig. 22). The **ID** index shows how much the combustion head moved.

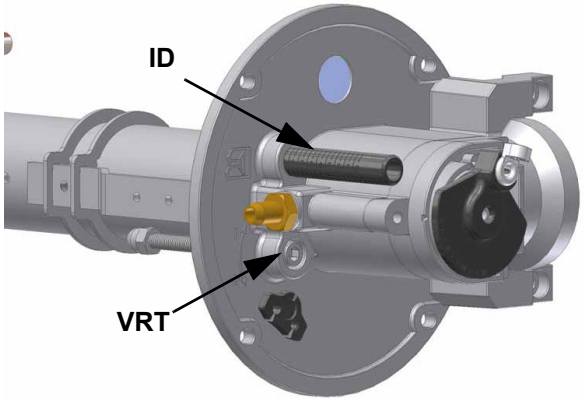

Fig. 22

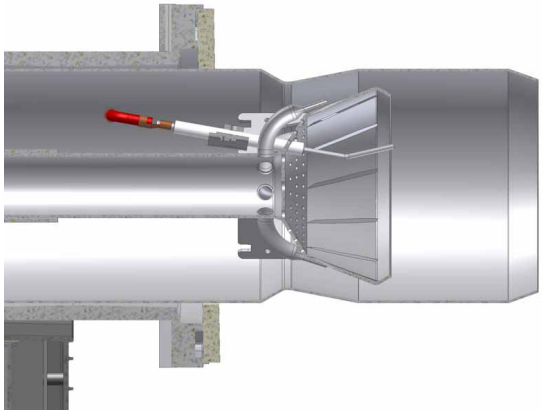

Fig. 23 - Head in "fully-ahead position"

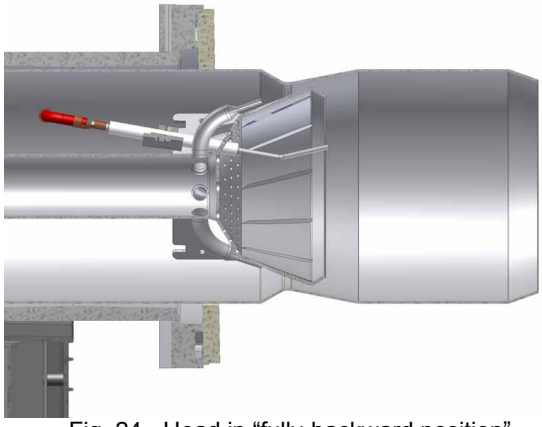

Fig. 24 - Head in "fully-backward position"

Calibration of air and gas pressure switches

The **air pressure switch** locks the control box if the air pressure is not the one requested. If it happens, unlock the burner by means of the control box unlock pushbutton, placed on the burner control panel.

The **gas pressure switches** check the pressure to avoid the burner operate when the pressure value is not in the requested pressure range.

Calibration of air pressure switch (double-stage, progressive and fully-modulating)

To calibrate the air pressure switch, proceed as follows:

- Remove the transparent plastic cap.
- Once air and gas setting have been accomplished, startup the burner.
- During the pre-purge phase o the operation, turn slowly the adjusting ring nut **VR** in the clockwise direction until the burner lockout, then read the value on the pressure switch scale and set it to a value reduced by 15%.
- Repeat the ignition cycle of the burner and check it runs properly.
- Refit the transparent plastic cover on the pressure switch.

Calibration of low gas pressure switch

As for the gas pressure switch calibration, proceed as follows:

- Be sure that the filter is clean.
- Remove the transparent plastic cap.
- While the burner is operating at the maximum output, test the gas pressure on the pressure port of the minimum gas pressure switch.
- Slowly close the manual cutoff valve (placed upstream the pressure switch, see gas train installation diagram), until the detected pressure is reduced by 50%. Pay attention that the CO value in the flue gas does not increase: if the CO values are higher than the limits laid down by law, slowly open the cutoff valve as to get values lower than these limits.
- Check that the burner is operating correctly.
- Clockwise turn the pressure switch adjusting ring nut (as to increase the pressure value) until the burner stops.
- Slowly fully open the manual cutoff valve.
- Refit the transparent plastic cover on the pressure switch.

Adjusting the maximum gas pressure switch (when provided)

To calibrate the maximum pressure switch, proceed as follows according to its mounting position:

1 remove the pressure switch plastic cover;

2 if the maximum pressure switch is mounted upstreaam the gas valves: measure the gas pressure in the network, when flame is off; by means of the adjusting ring nut **VR**, set the value read, increased by the 30%.

3 if the maximum pressure switch is mounted downstream the “gas governor-gas valves” group and upstream the butterfly valve: light the burner, adjust it according to the procedure in the previous paragrph. Then, measure the gas pressure at the operating flow rate, downstream the “gas governor-gas valves” group and upstream the butterfly valve; by means of the adjusting ring nut **VR**, set the value read on step 2, increased by the 30%;

4 replace the plastic cover.

PGCP Gas leakage pressure switch

- remove the pressure switch plastic cover;
- adjust the PGCP pressure switch to the same value set for the minimum gas pressure switch;
- replace the plastic cover.

PART II: OPERATION

LIMITATIONS OF USE

THE BURNER IS AN APPLIANCE DESIGNED AND CONSTRUCTED TO OPERATE ONLY AFTER BEING CORRECTLY CONNECTED TO A HEAT GENERATOR (E.G. BOILER, HOT AIR GENERATOR, FURNACE, ETC.), ANY OTHER USE IS TO BE CONSIDERED IMPROPER AND THEREFORE DANGEROUS.

THE USER MUST GUARANTEE THE CORRECT FITTING OF THE APPLIANCE, ENTRUSTING THE INSTALLATION OF IT TO QUALIFIED PERSONNEL AND HAVING THE FIRST COMMISSIONING OF IT CARRIED OUT BY A SERVICE CENTRE AUTHORISED BY THE COMPANY MANUFACTURING THE BURNER.

A FUNDAMENTAL FACTOR IN THIS RESPECT IS THE ELECTRICAL CONNECTION TO THE GENERATOR'S CONTROL AND SAFETY UNITS (CONTROL THERMOSTAT, SAFETY, ETC.) WHICH GUARANTEES CORRECT AND SAFE FUNCTIONING OF THE BURNER.

THEREFORE, ANY OPERATION OF THE APPLIANCE MUST BE PREVENTED WHICH DEPARTS FROM THE INSTALLATION OPERATIONS OR WHICH HAPPENS AFTER TOTAL OR PARTIAL TAMPERING WITH THESE (E.G. DISCONNECTION, EVEN PARTIAL, OF THE ELECTRICAL LEADS, OPENING THE GENERATOR DOOR, DISMANTLING OF PART OF THE BURNER).

NEVER OPEN OR DISMANTLE ANY COMPONENT OF THE MACHINE.

OPERATE ONLY THE MAIN SWITCH, WHICH THROUGH ITS EASY ACCESSIBILITY AND RAPIDITY OF OPERATION ALSO FUNCTIONS AS AN EMERGENCY SWITCH, AND ON THE RESET BUTTON.

IN CASE OF A BURNER SHUT-DOWN, RESET THE CONTROL BOX BY MEANS OF THE RESET PUSHBUTTON. IF A SECOND SHUT-DOWN TAKES PLACE, CALL THE TECHNICAL SERVICE, WITHOUT TRYING TO RESET FURTHER.

WARNING: DURING NORMAL OPERATION THE PARTS OF THE BURNER NEAREST TO THE GENERATOR (COUPLING FLANGE) CAN BECOME VERY HOT, AVOID TOUCHING THEM SO AS NOT TO GET BURNT.

Burner control panel

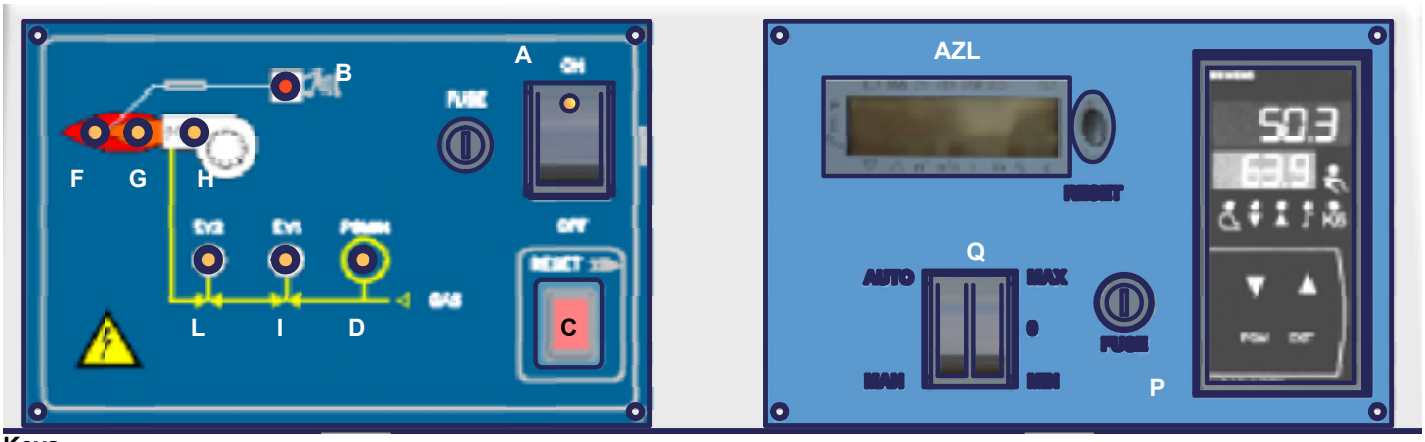

Keys

A Mains switch ON - OFF
B Lockout signalling lamp
C Reset button for control box
D Gas pressure switch consent signalling lamp
F High flame operation signalling lamp (or air damper opening during pre-purge stage)
G Low flame operation signalling lamp
H Ignition transformer in operation signalling light
I EV2 opening signalling lamp
L EV1 opening signalling lamp
P Modulator (on fully modulating burners only)
Q Operation selector MAN - AUTO (operation in manual or automatic mode):
MIN = operation with minimum output
0 = Stop
MAX = operation at the maximum output

OPERATION

⚠	ATTENTION: BEFORE STARTING THE BURNER UP, BE SURE THAT THE MANUAL CUTOFF VALVES ARE OPEN AND CHECK THAT THE PRESSURE VALUE UPSTREAM THE GAS TRAIN MATCHES THE VALUE ON PARAGRAPH “TECHNICAL SPECIFICATIONS”). CHECK THAT THE MAINS SWITCH IS CLOSED. CAREFULLY READ THE “WARNINGS” CHAPTER.

- Turn to the ON position the mains switch A on the burner front panel.
- Check the LMV2 is not in lockout stage (LED B on) if so, unlock by pressing the Enter/InFo key (see LMV2.. manual);
- Check that the control thermostats or pressure switches enable the burner to operate.
- Check the gas supply pressure is sufficient (signalled by an error code on the AZL2..display), if necessary, adjust the pressure switches.
- The startup cycle begins, the actuator drives the air damper to the maximum opening position, the fan motor starts and the pre-purgue phase begins. During the pre-purgue phase, the complete opening of the air damper is signalled by the lamp F on the frontal panel of the electrical board.
- At the end of the pre-purgue phase, the air damper goes to the ignition position, the ignition transformer turns on (signalled by the lamp H) and few seconds later the solenoid valves EV1 and EV2 are energized (lights I and L on the front panel).
- Few seconds after the opening of the valves, the ignition transformer turns off and the lamp H turns off subsequently:

Double-stage burners: the burner is on in low flame stage (light G is on); some seconds later, the high flame operation begins and the burner switches automatically to high flame (light F is on) or remains in low flame operation, accordign to the plant requests.

Progressive and fully modulating burners - few seconds after the gas valve opening, the ignition transformer is de-energized. The burner is in low flame operation and some seconds later, the two-stages operation begins; the burner increases or decreases its output, directly driven by the external thermostat (progressive version) or by the modulator (P in the picture below, fully modulating burners only).

PART III: MAINTENANCE

At least once a year carry out the maintenance operations listed below. In the case of seasonal servicing, it is recommended to carry out the maintenance at the end of each heating season; in the case of continuous operation the maintenance is carried out every 6 months.

WARNING: ALL OPERATIONS ON THE BURNER MUST BE CARRIED OUT WITH THE MAINS DISCONNECTED AND THE FUEL MANAUL CUTOFF VALVES CLOSED!
ATTENTION: READ CAREFULLY THE "WARNINGS" CHAPTER AT THE BEGINNIG OF THIS MANUAL.

ATTENTION when servicing, if it was necessary to disassemble the gas train parts, remember to execute the gas proving test, once the gas train is reassembled, according to the procedure imposed by the law in force.

ROUTINE OPERATIONS

- Clean and examining the gas filter cartdrige, if necessary replace it (Fig. 25 on).
- Removal, examination and cleaning of the combustion head (Fig. 31 on).
- Check the ignition and detection electrodes, clean and adjust if necessary (see Fig. 32). In case of doubr, check the detection current according to the schemes in Fig. 36..
- Cleaning and greasing of sliding and rotating parts.

Removing the filter in the MULTIBLOC DUNGS MB-DLE 405..412

- Check the filter at least once a year!
- Change the filter if the pressure difference between pressure connection 1 and 3 (Fig. 25-Fig. 26)is $\Delta p > 10$ mbar.
- Change the filter if the pressure difference between pressure connection 1 and 3 (Fig. 25-Fig. 26) is twice as high compared to the last check.

You can change the filter without removing the fitting.

1 Interrupt the gas supply closing the on-off valve.
2 Remove screws 1 ÷ 4 using the Allen key n. 3 and remove filter cover 5 in Fig. 27.
3 Remove the filter 6 and replace with a new one.
4 Replace filter cover 5 and tighten screws 1 ÷ 4 without using any force and fasten.
5 Perform leakage and functional test, $p_{max.}$ = 360 mbar.
6 Pay attention that dirt does not fall inside the valve.

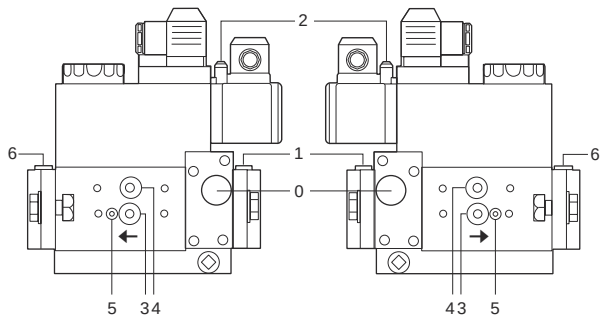

Fig. 25

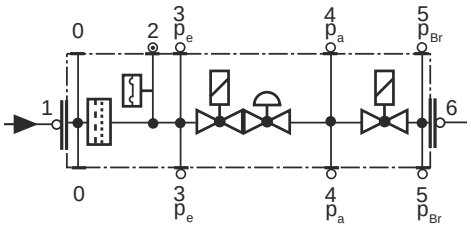

Fig. 26

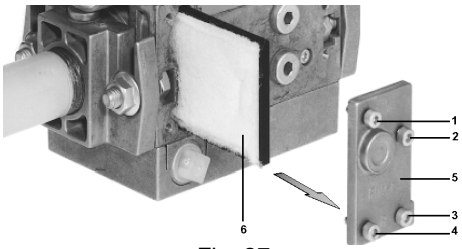

Fig. 27

Removing the filter in the MULTIBLOC DUNGS MB-DLE 415 - 420 B01 1” 1/2 - 2”

- Check the filter at least once a year!
- Change the filter if the pressure difference between pressure connection 1 and 2 (Fig. 28-Fig. 29) $\Delta p > 10$ mbar.
- Change the filter if the pressure difference between pressure connection 1 and 2 (Fig. 28-Fig. 29) is twice as high compared to the last check.

You can change the filter without removing the fitting.

1 Interrupt the gas supply closing the on-off valve.
2 Remove screws 1 ÷ 6 (Fig. 30).
3 Change filter insert.
4 Re-insert filter housing, screw in screws 1 ÷ 6 without using any force and fasten.
5 Perform leakage and functional test, $p_{max.}$ = 360 mbar.
6 Pay attention that dirt does not fall inside the valve.

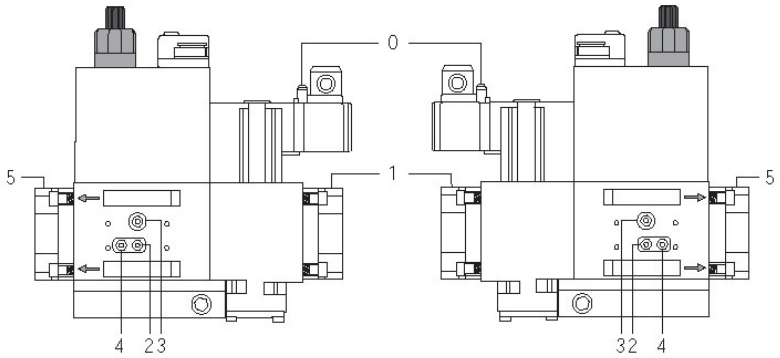

Fig. 28

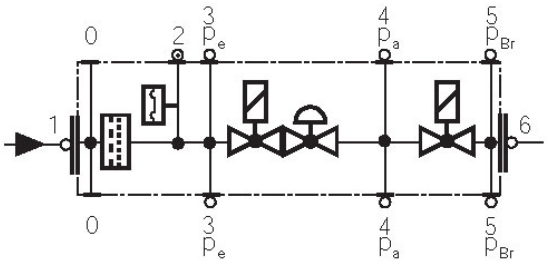

Fig. 29

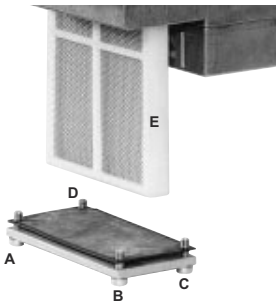

Fig. 30

Removing and cleaning the combustion head

1 Remove the 4 screws V1, V2, V3, V4 and the couple of screws S1 and S2 (Fig. 31).

⚠ **ATTENTION: the screw V1 is longer than the other and must be replaced in its seat.**

2 Remove the connector **CR** of the ionization electrode (Fig. 32).

3 Unplug cable **CA** of the ignition electrode **EA** (Fig. 32) and extract it from the flange by removing the rubber **G** (Fig. 32).

4 To remove the head, the operator must pull it towards himself.

5 Once the combustion head is removed, check that the air and gas holes are not obstructed.

6 Clean the combustion head by means of a vacuum cleaner or, in case of scale, scrape it off by means of a scratchbrush.

7 To reassemble the plate, follow the procedure in reversed order.

⚠ CAUTION: when reassembling, insert the V1, V2, V3 e V4 screws without fastening; insert and fasten the S1 and S2 screws; then fix the V1, V2, V3 and V4 screws.

⚠ **CAUTION: during the assembling phase, before tightening screws V1, V2, V3, V4, tighten screws S1 and S2, then fasten V1, V2, V3, V4.**

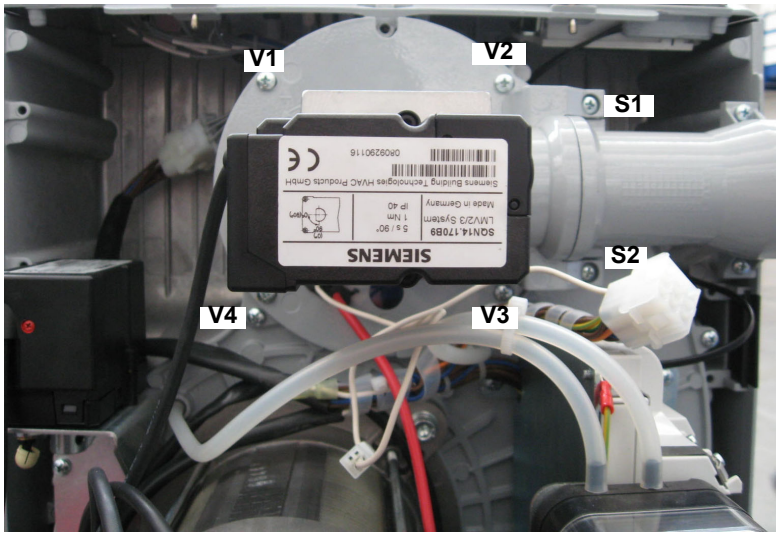

Fig. 31

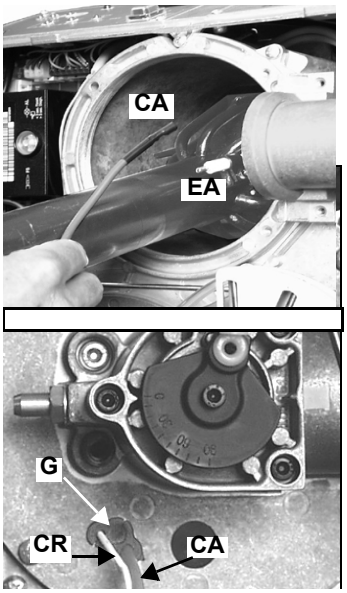

Fig. 32

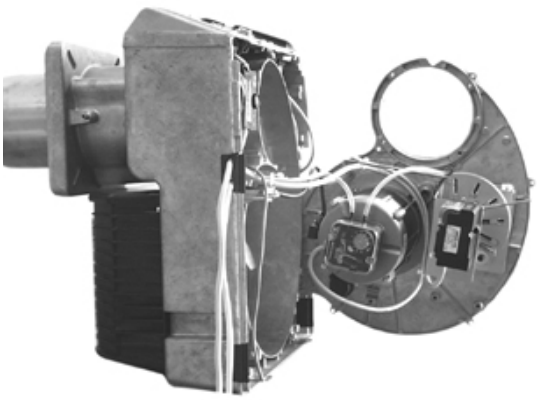

Fig. 33

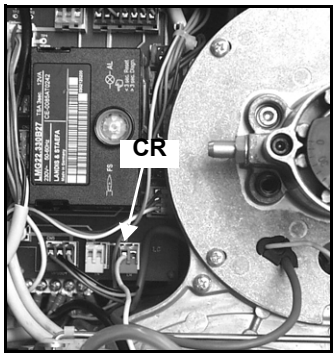

Fig. 34

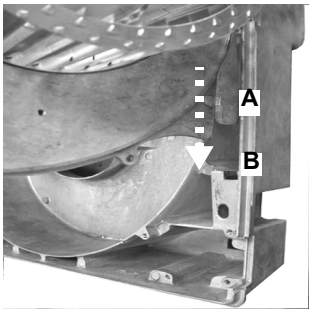

Fig. 35

Removing and cleaning the combustion head

To remove the electrodes, proceed as follows once the combustion head is removed (see “Removing and cleaning the combustion head” a pagina 37):

1 disconnect the cables from the electrodes (**ER** = detection electrode; **EA** = ignition electrode);
2 loosen the fixing screw (**V**);
3 remove the electrodes and replace them, observing the measures quoted on next paragraph;
4 re-connect the cables and re-assemble the combustion head (see picture).

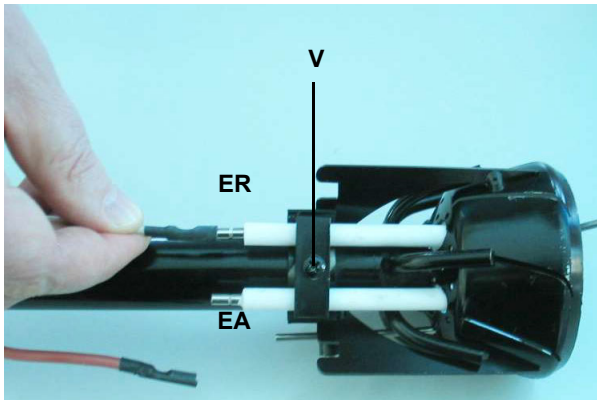

Electrodes position setting

ATTENTION: avoid the ignition and detection electrodes to contact metallic parts (blast tube, head, etc.), otherwise the boiler’s operation would be compromised. Check the electrodes position after any intervention on the combustion head. The gap between the ignition electrode and the ground is **4 ÷ 5 mm** (see Fig. 36).

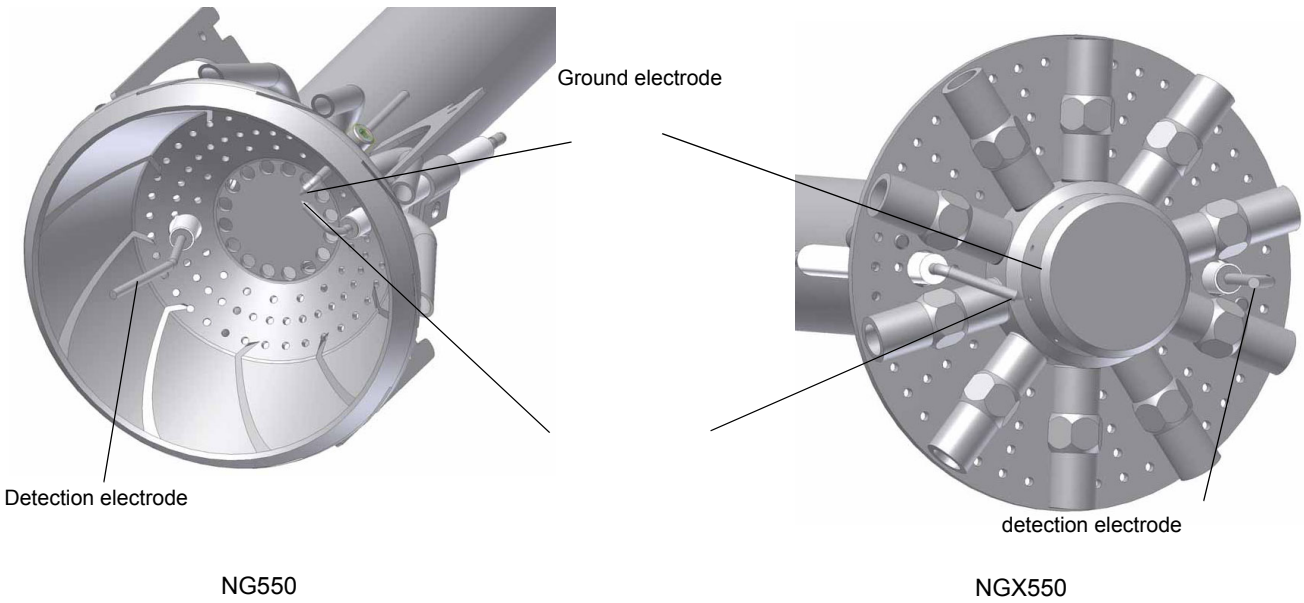

Fig. 36

Checking the detection current

figuraTo measure the detection signals refer to the diagrams in the picture below. If the signal is less than the indicated value, check the position of the detection electrode, the electrical contacts and if necessary replace the detection electrode.

Control box	Minimum detection signal
Siemens LMV2x/3x	4 µA (value on display:30%)

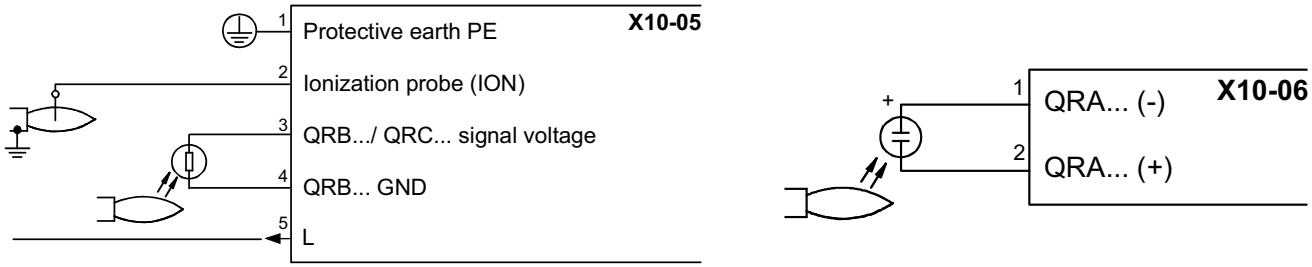

Error code	Diagnostic code	Cause
93	3	Sensore short-circuit

Permissible length of flame detector cable (laid separately): 3 m (core-earth 100 pF / m).

Extraneous light

Extraneous light during standby (phase 12) leads to start prevention, followed by a restart.
Extraneous light during the prepurge phase leads to immediate lockout.
If extraneous light occurs during the shutdown phase, the system switches to the safety phase.
One repetition is permitted. This means that if the error occurs again the next time the system is shut down, the unit initiates lockout.

Seasonal stop

To stop the burner in the seasonal stop, proceed as follows:

1 turn the burner main switch to 0 (Off position)
2 disconnect the power mains
3 close the fuel valve of the supply line

Burner disposal

In case of disposal, follow the instructions according to the laws in force in your country about the “Disposal of materials”.

ELECTRICAL WIRING DIAGRAMS

Wiring diagram SE04-755 - Progressive burners

Wiring diagram SE04-753 - Fully-modulating burners

BURNER EXPLODED VIEW

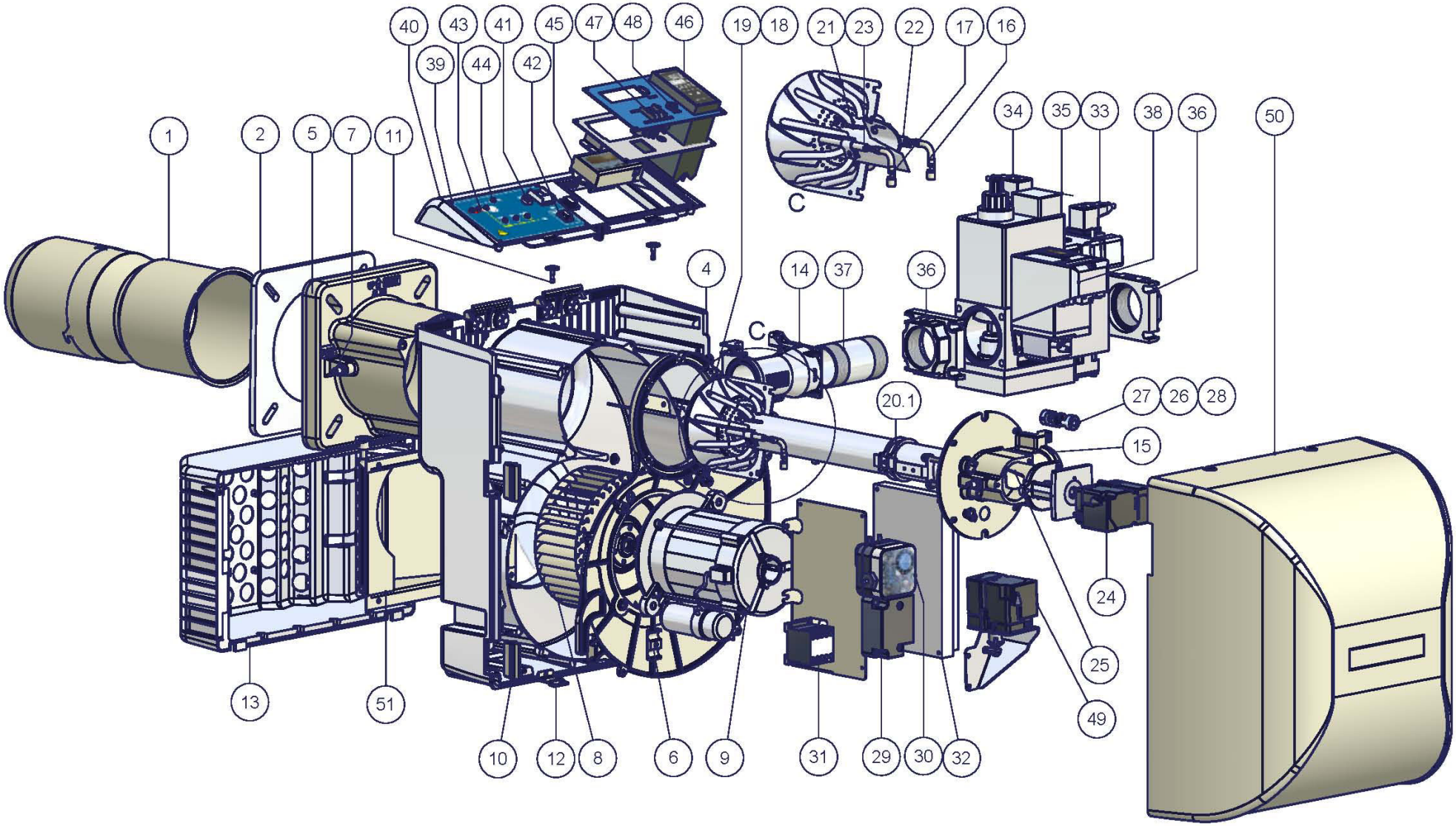

POS.	DESCRIPTION
1	EXTENDED BLAST TUBE
2	GENERATOR GASKET
3	BURNER HOUSING
4	FLANGED PIPE
5	MOTOR SUPPORT PLATE
6	PRESSURE PLUG
7	FAN WHEEL
8	MOTOR
9	FAIRLEAD
10	COVER FIXING SCREW
11	BRACKET
12	AIR INTAKE
13	GAS MANIFOLD
14	GAS MANIFOLD
15	IGNITION CABLE
16	DETECTION CABLE
17	EXTENDED COMBUSTION HEAD (ASSY)
18	COMBUSTION HEAD
19	BRACKET
20	GROUND ELECTRODE
21	DETECTION ELECTRODE
22	IGNITION ELECTRODE
23	ACTUATOR
24	BUTTERFLY GAS VALVE
25	COUPLING
26	HALF-COUPLING

POS.	DESCRIPTION
27	ELASTIC RING
28	IGNITION TRANSFORMER
29	AIR PRESSURE SWITCH
30	CONTACTOR
31	CONTROL BOX
32	CONNECTOR
33	CONNECTOR
34	GAS VALVES GROUP WITH GOVERNOR
35	FLANGE
36	THREADED GAS PIPE
37	GAS PROVING SYSTEM
38	GAS PRESSURE
39	FRONT CONTROL PANEL
40	CONTROL BOARD
41	FUSE
42	LOCK-OUT RESET BUTTON
43	LIGHT
44	LIGHT
45	CONTROL PANEL
46	OUTPUT CONTROLLER
47	SWITCH
48	FRONT CONTROL PANEL
49	ACTUATOR
50	COVER
51	AIR INTAKE DAMPER

ELECTRICAL WIRING DIAGRAMS

Wiring diagram SE04-755 - Progressive burners

Wiring diagram SE04-753 - Fully-modulating burners

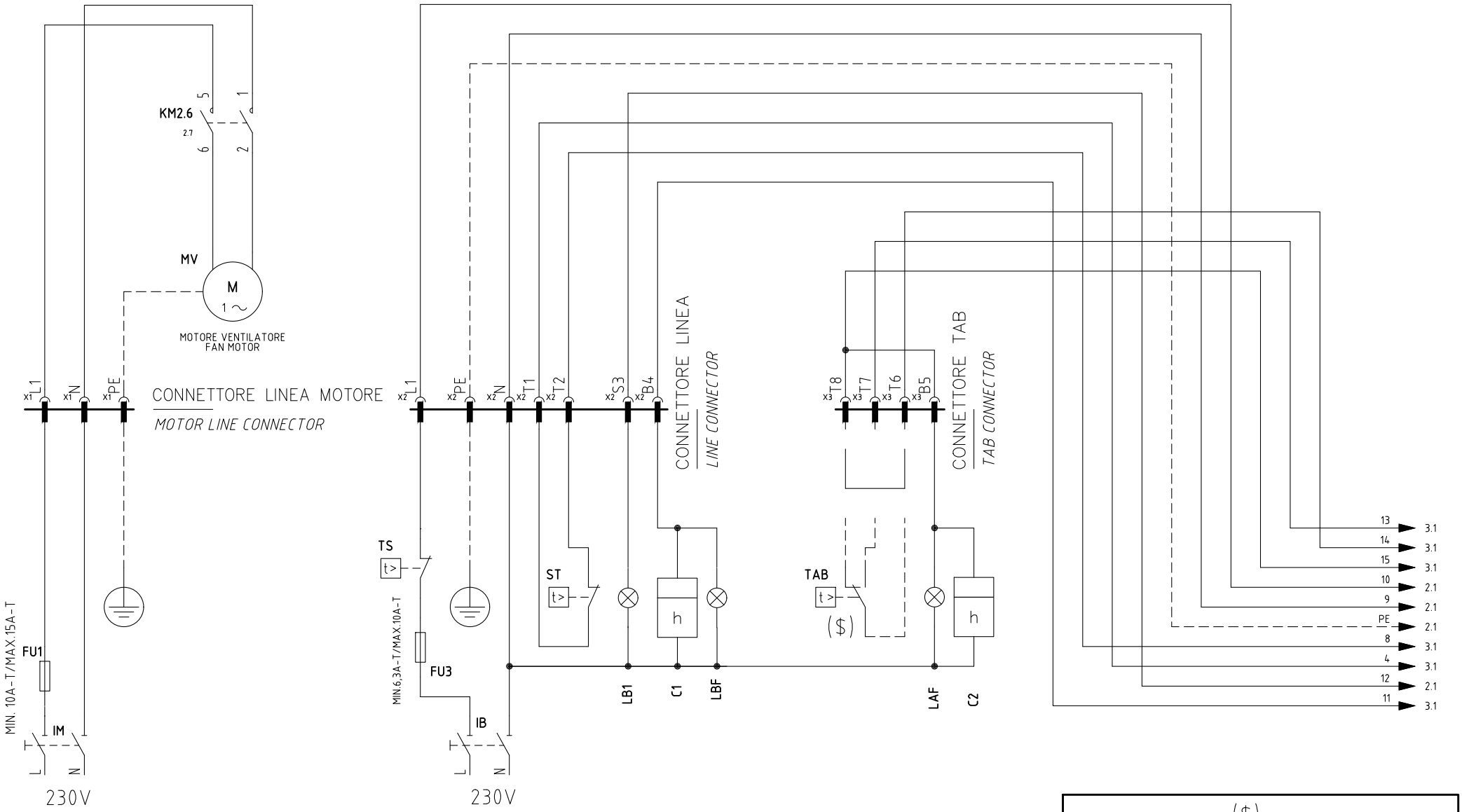

($)
SE USATO "TAB", TOGLIERE IL PONTE TRA I MORSETTI T6–T8
IF USED "TAB", REMOVE THE BRIDGE BETWEEN TERMINALS T6-T8

Data 14/01/2009		PREC.	FOGLIO
Revisione 01		/	1
Dis. N. 04 – 0755		SEGUE	TOTALE
		2	7

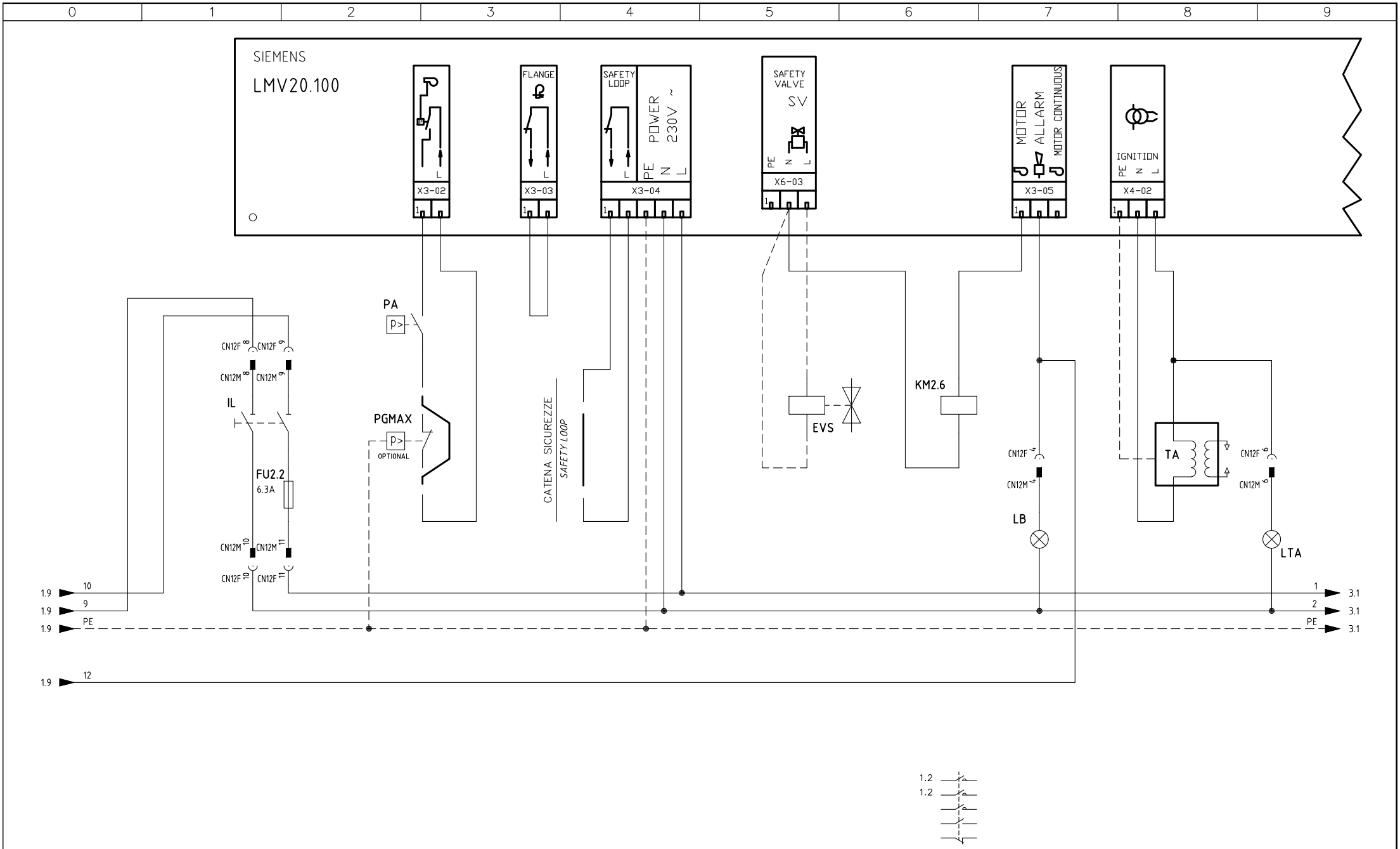

Data	14/01/2009	PREC.	FOGLIO
Revisione	01	1	2
Dis. N.	04 – 0755	SEGUE 3	TOTALE 7

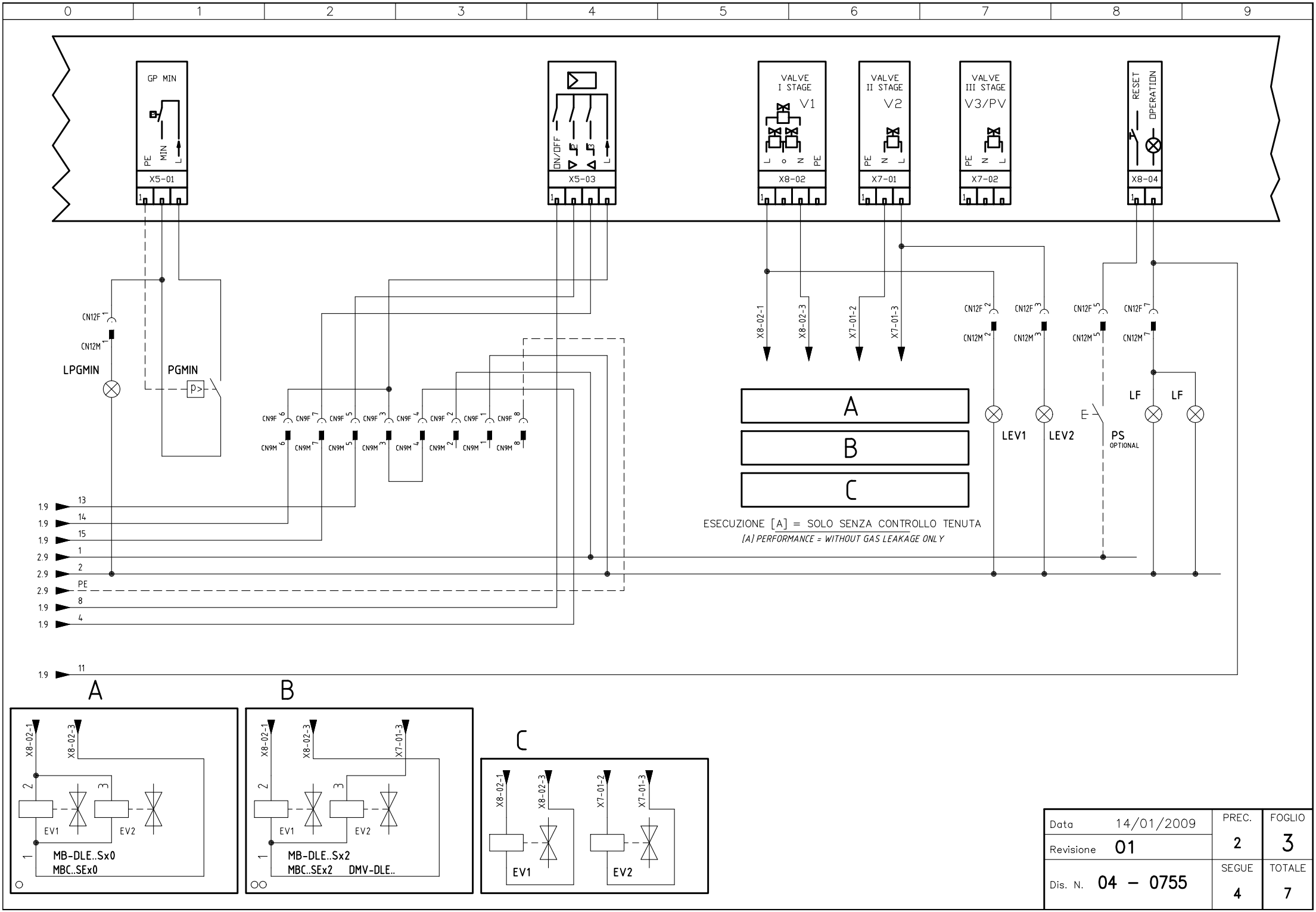

Data	14/01/2009	PREC.	FOGLIO
Revisione	01	2	3
Dis. N.	04 – 0755	SEGUE	TOTALE
		4	7

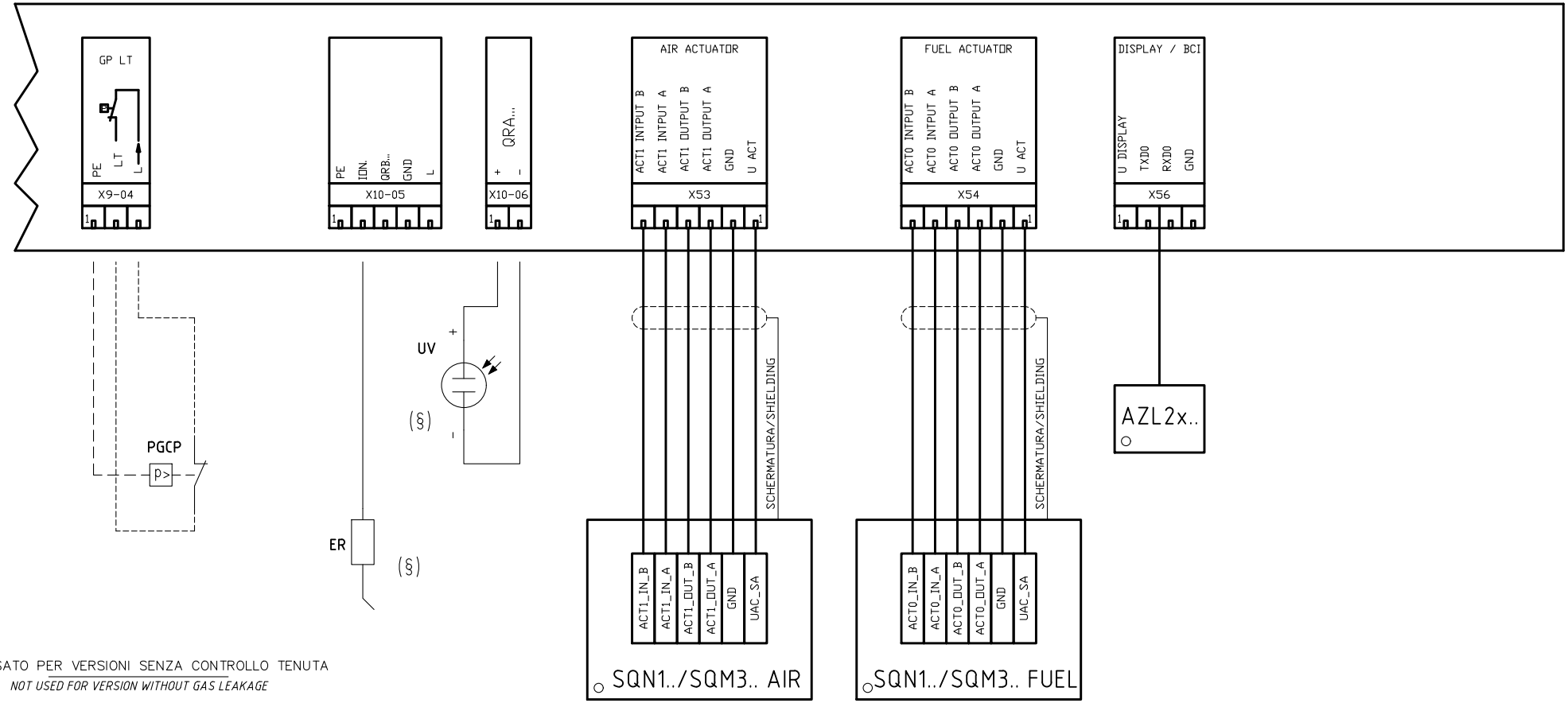

NON USATO PER VERSIONI SENZA CONTROLLO TENUTA

NOT USED FOR VERSION WITHOUT GAS LEAKAGE

(§)

SONDA [UV] IN ALTERNATIVA A SONDA [ER]

PROBE [UV] ALTERNATIVE TO PROBE [ER]

Data 14/01/2009		PREC.	FOGLIO
Revisione 01		3	4
Dis. N. 04 – 0755		SEGUE	TOTALE
		5	7

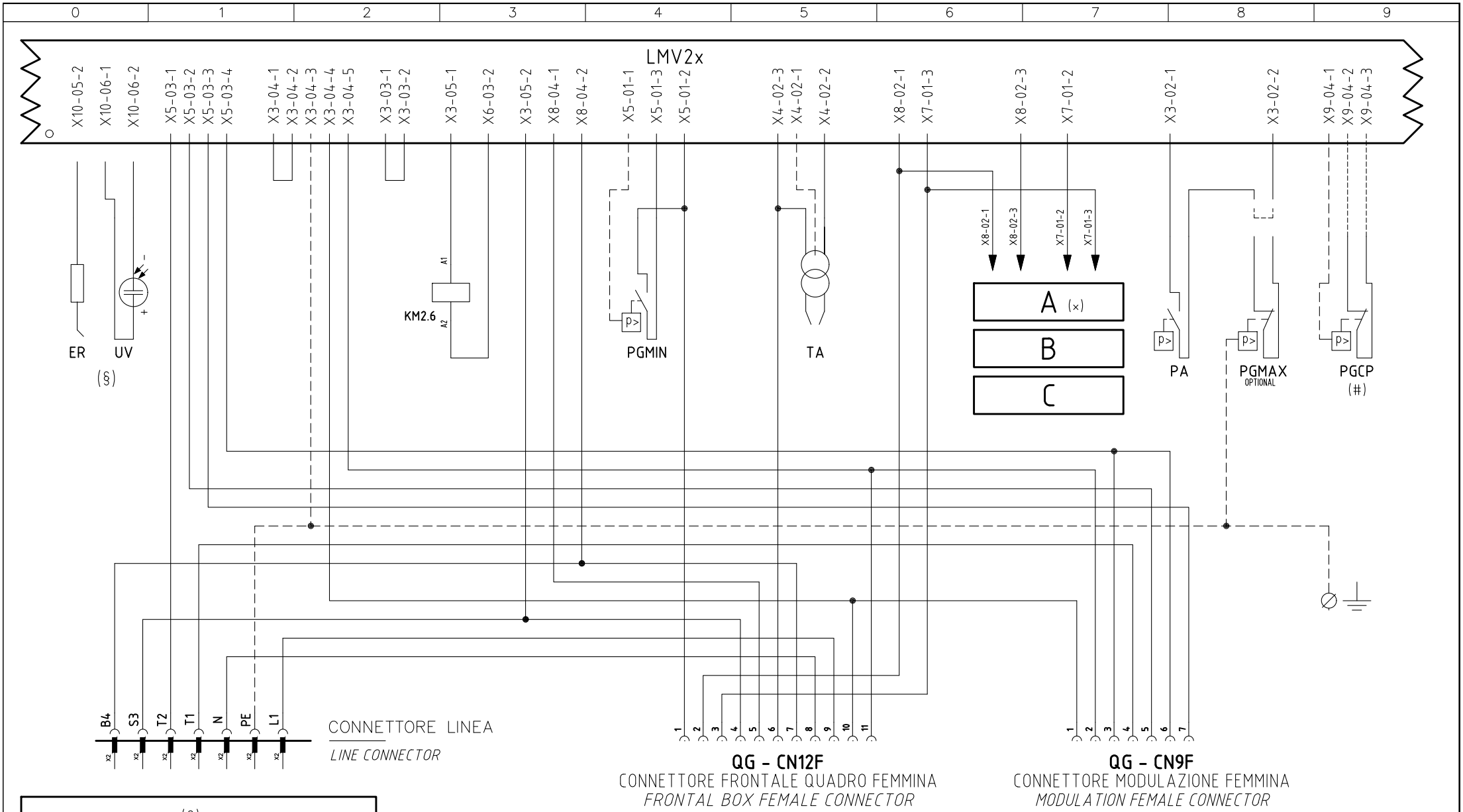

(§)
SONDA [UV] IN ALTERNATIVA A SONDA [ER]
PROBE [UV] ALTERNATIVE TO PROBE [ER]

(#)
NON USATO PER VERSIONI SENZA CONTROLLO TENUTA
NOT USED FOR VERSION WITHOUT GAS LEAKAGE

(×)
ESECUZIONE [A] = SOLO SENZA CONTROLLO TENUTA
[A] PERFORMANCE = WITHOUT GAS LEAKAGE ONLY

INTERFACCIA CONNETTORI / LMV2x

CONNECTORS / LMV2x INTERFACE

Data	14/01/2009	PREC.	FOGLIO
Revisione	01	4	5
Dis. N.	04 – 0755	SEGUE	TOTALE
		6	7

QG - CN12M

CONNETTORE FRONTALE QUADRO MASCHIO

FRONTAL BOX MALE CONNECTOR

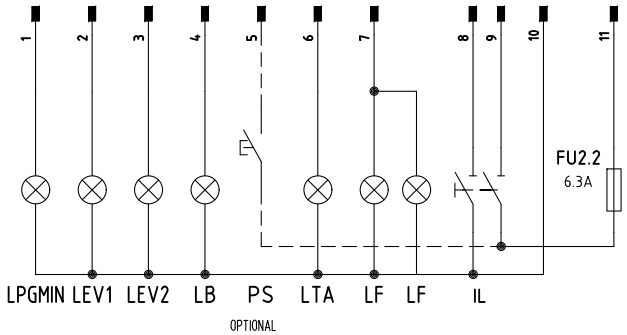

QG - CN9M

CONNETTORE MODULAZIONE MASCHIO

MODULATION MALE CONNECTOR

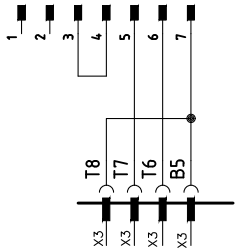

CONNETTORE TAB

TAB CONNECTOR

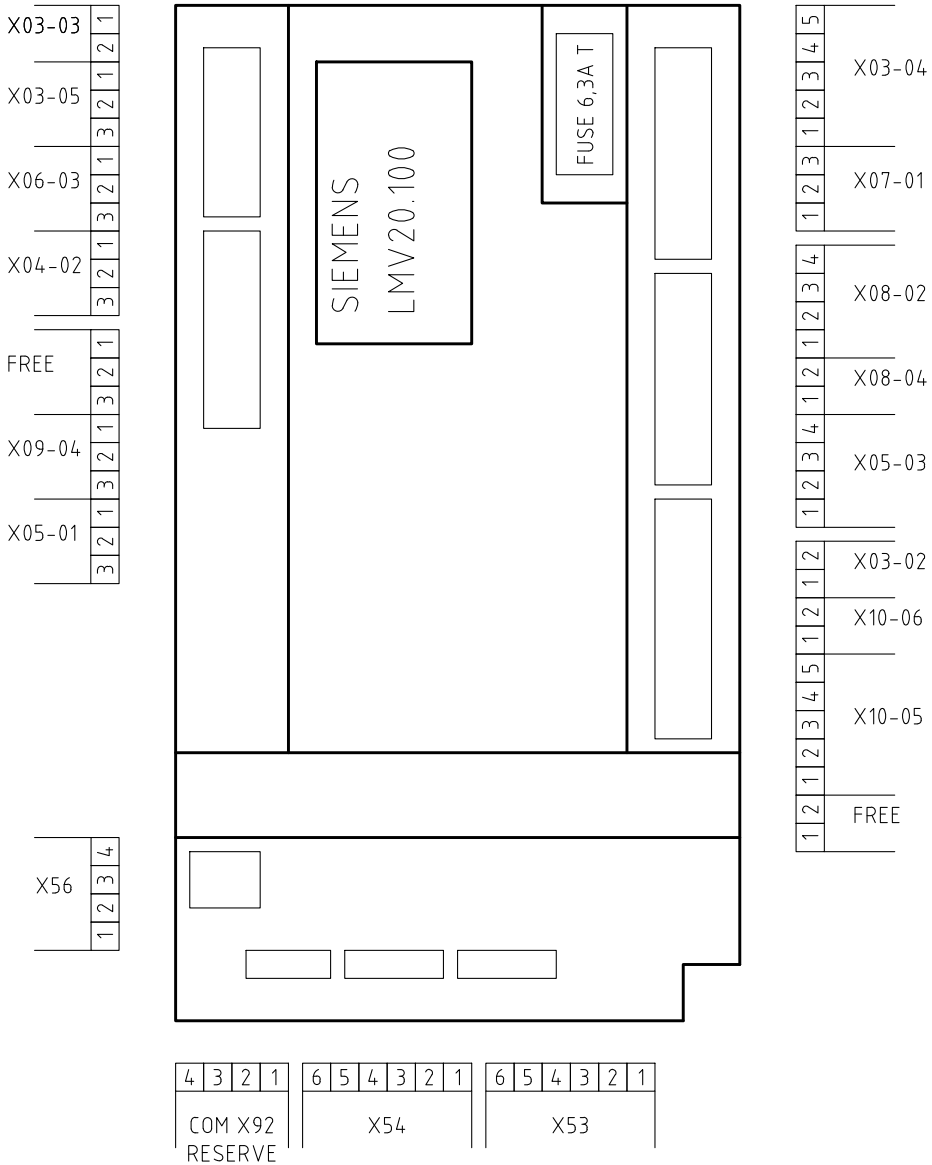

Data	14/01/2009	PREC.	FOGLIO
Revisione	01	5	6
Dis. N.	04 – 0755	SEGUE	TOTALE
		7	7

Sigla/Item	Foglio/Sheet	Funzione	Function
AZL2x..	4	INTERFACCIA UTENTE	USER INTERFACE
C1	1	CONTAORE FUNZIONAMENTO	OPERATION TIME COUNTER
C2	1	CONTAORE ALTA FIAMMA	HIGH FLAME TIME COUNTER
DMV-DLE..	3	GRUPPO VALVOLE GAS (ALTERNATIVO)	GAS VALVES GROUP (ALTERNATIVE)
ER	4	ELETTRODO RILEVAZIONE FIAMMA	FLAME DETECTION ELECTRODE
EV1	3	ELETTROVALVOLA GAS LATO RETE	UPSTREAM GAS SOLENOID VALVE
EV2	3	ELETTROVALVOLA GAS LATO BRUCIATORE	DOWNSTREAM GAS SOLENOID VALVE
EVS	2	ELETTROVALVOLA GAS DI SICUREZZA (OPTIONAL)	SAFETY GAS SOLENOID VALVE (OPTIONAL)
FU1	1	FUSIBILE LINEA MOTORE VENTILATORE	FAN MOTOR LINE FUSE
FU2.2	2	FUSIBILE LINEA AUSILIARI	AUXILIARY LINE FUSE
FU3	1	FUSIBILE LINEA BRUCIATORE	BURNER LINE FUSE
IB	1	INTERRUTTORE LINEA BRUCIATORE	BURNER LINE SWITCH
IL	2	INTERRUTTORE LINEA AUSILIARI	AUXILIARY LINE SWITCH
IM	1	INTERRUTTORE LINEA MOTORE VENTILATORE	FAN MOTOR LINE SWITCH
KM2.6	2	CONTATTORE MOTORE VENTILATORE	FAN MOTOR CONTACTOR
LAF	1	LAMPADA SEGNALAZIONE ALTA FIAMMA BRUCIATORE	BURNER IN HIGH FLAME INDICATOR LIGHT
LB	2	LAMPADA SEGNALAZIONE BLOCCO BRUCIATORE	INDICATOR LIGHT FOR BURNER LOCK-OUT
LB1	1	LAMPADA SEGNALAZIONE BLOCCO BRUCIATORE	INDICATOR LIGHT FOR BURNER LOCK-OUT
LBF	1	LAMPADA SEGNALAZIONE BASSA FIAMMA BRUCIATORE	BURNER IN LOW FLAME INDICATOR LIGHT
LEV1	3	LAMPADA SEGNALAZIONE APERTURA [EV1]	INDICATOR LIGHT FOR OPENING OF ELECTRO-VALVE [EV1]
LEV2	3	LAMPADA SEGNALAZIONE APERTURA [EV2]	INDICATOR LIGHT FOR OPENING OF ELECTRO-VALVE [EV2]
LF	3	LAMPADA SEGNALAZIONE FUNZIONAMENTO BRUCIATORE	INDICATOR LIGHT BURNER OPERATION
LF	3	LAMPADA SEGNALAZIONE FUNZIONAMENTO BRUCIATORE	INDICATOR LIGHT BURNER OPERATION
LMV20.100	2	APPARECCHIATURA DI COMANDO	CONTROL SCHEME
LPGMIN	3	LAMPADA SEGNALAZIONE PRESENZA GAS IN RETE	INDICATOR LIGHT FOR PRESENCE OF GAS IN THE NETWORK
LTA	2	LAMPADA SEGNALAZIONE TRASFORMATORE DI ACCENSIONE	IGNITION TRANSFORMER INDICATOR LIGHT
MB-DLE..Sx0	3	GRUPPO VALVOLE GAS	GAS VALVES GROUP
MB-DLE..Sx2	3	GRUPPO VALVOLE GAS	GAS VALVES GROUP
MBC..SEx0	3	GRUPPO VALVOLE GAS (ALTERNATIVO)	GAS VALVES GROUP (ALTERNATIVE)
MBC..SEx2	3	GRUPPO VALVOLE GAS (ALTERNATIVO)	GAS VALVES GROUP (ALTERNATIVE)
MV	1	MOTORE VENTILATORE	FAN MOTOR
PA	2	PRESSOSTATO ARIA	AIR PRESSURE SWITCH
PGCP	4	PRESSOSTATO GAS CONTROLLO PERDITE (OPTIONAL)	GAS LEAKAGE PRESSURE SWITCH (OPTIONAL)
PGMAX	2	PRESSOSTATO GAS DI MASSIMA PRESSIONE (OPTIONAL)	MAXIMUM PRESSURE GAS SWITCH (OPTIONAL)
PGMIN	3	PRESSOSTATO GAS DI MINIMA PRESSIONE	MINIMUM GAS PRESSURE SWITCH
PS	3	PULSANTE SBLOCCO	RESET BUTTON
SQN1../SQM3.. AIR	4	SERVOCOMANDO SERRANDA ARIA	AIR DAMPER ACTUATOR
SQN1../SQM3.. FUEL	4	SERVOCOMANDO COMBUSTIBILE	FUEL ACTUATOR
ST	1	SERIE TERMOSTATI/PRESSOSTATI	SERIES OF THERMOSTATS OR PRESSURE SWITCHES
TA	2	TRASFORMATORE DI ACCENSIONE	IGNITION TRANSFORMER
TAB	1	TERMOSTATO/PRESSOSTATO ALTA-BASSA FIAMMA	HIGH-LOW THERMOSTAT/PRESSURE SWITCHES
TS	1	TERMOSTATO/PRESSOSTATO DI SICUREZZA	SAFETY THERMOSTAT OR PRESSURE SWITCH
UV	4	SONDA UV RILEVAZIONE FIAMMA (ALTERNATIVA)	UV FLAME DETECTOR (ALTERNATIVE)

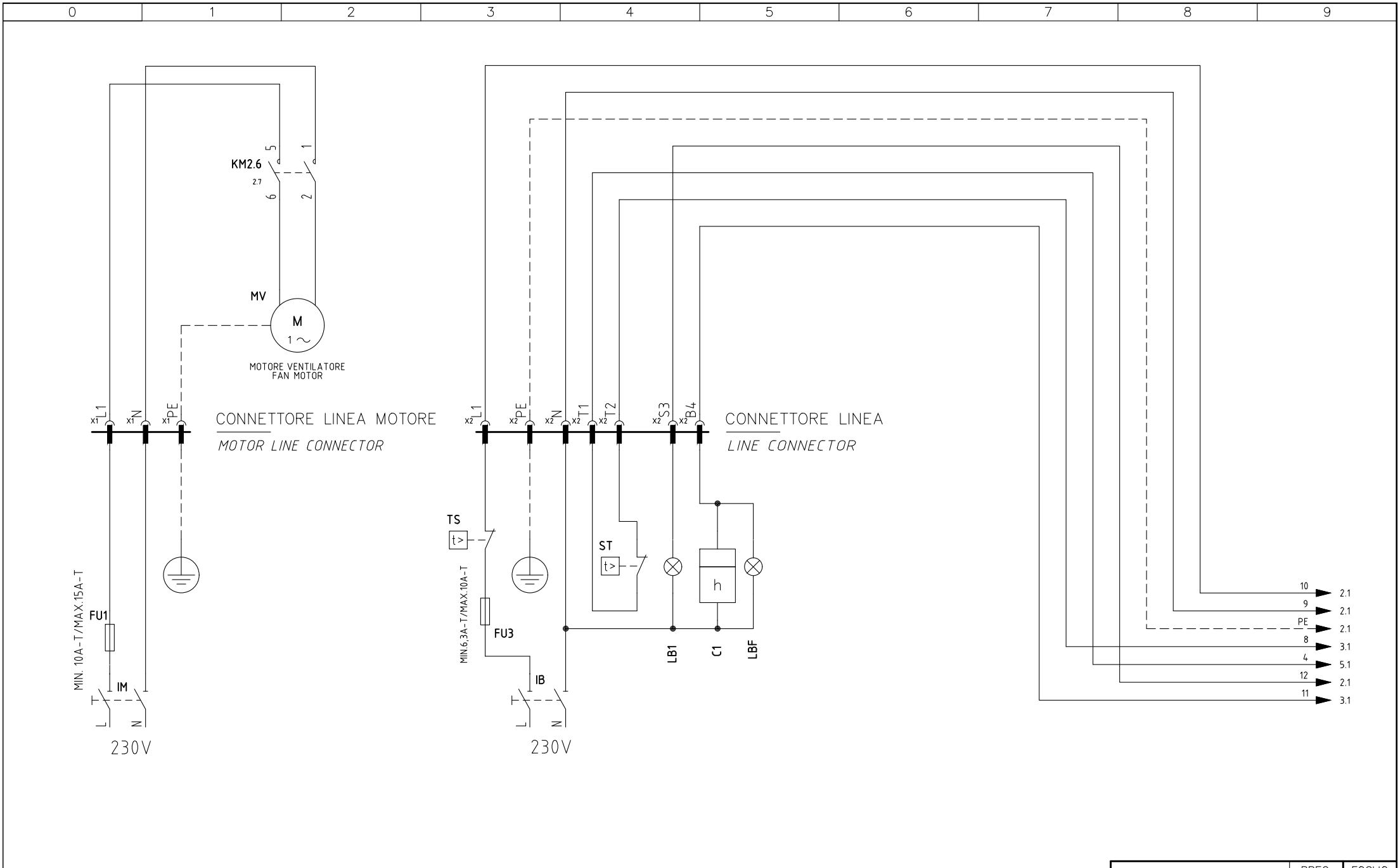

Data 15/10/2008		PREC.	FOGLIO
Revisione 04		/	1
Dis. N. 04 – 0753		SEGUE	TOTALE
		2	10

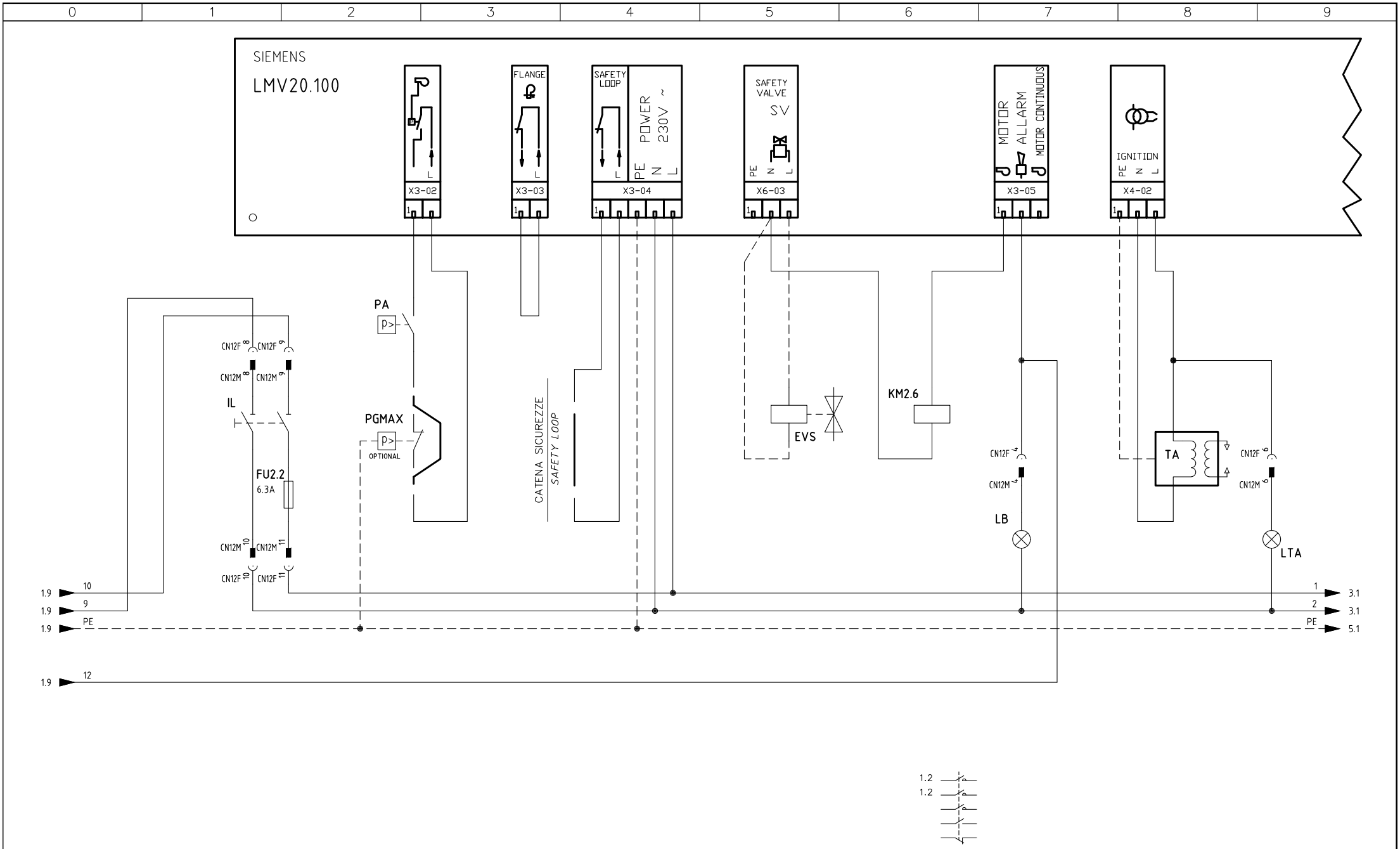

Data	15/10/2008	PREC.	FOGLIO
Revisione	04	1	2
Dis. N.	04 – 0753	SEGUE	TOTALE
		3	10

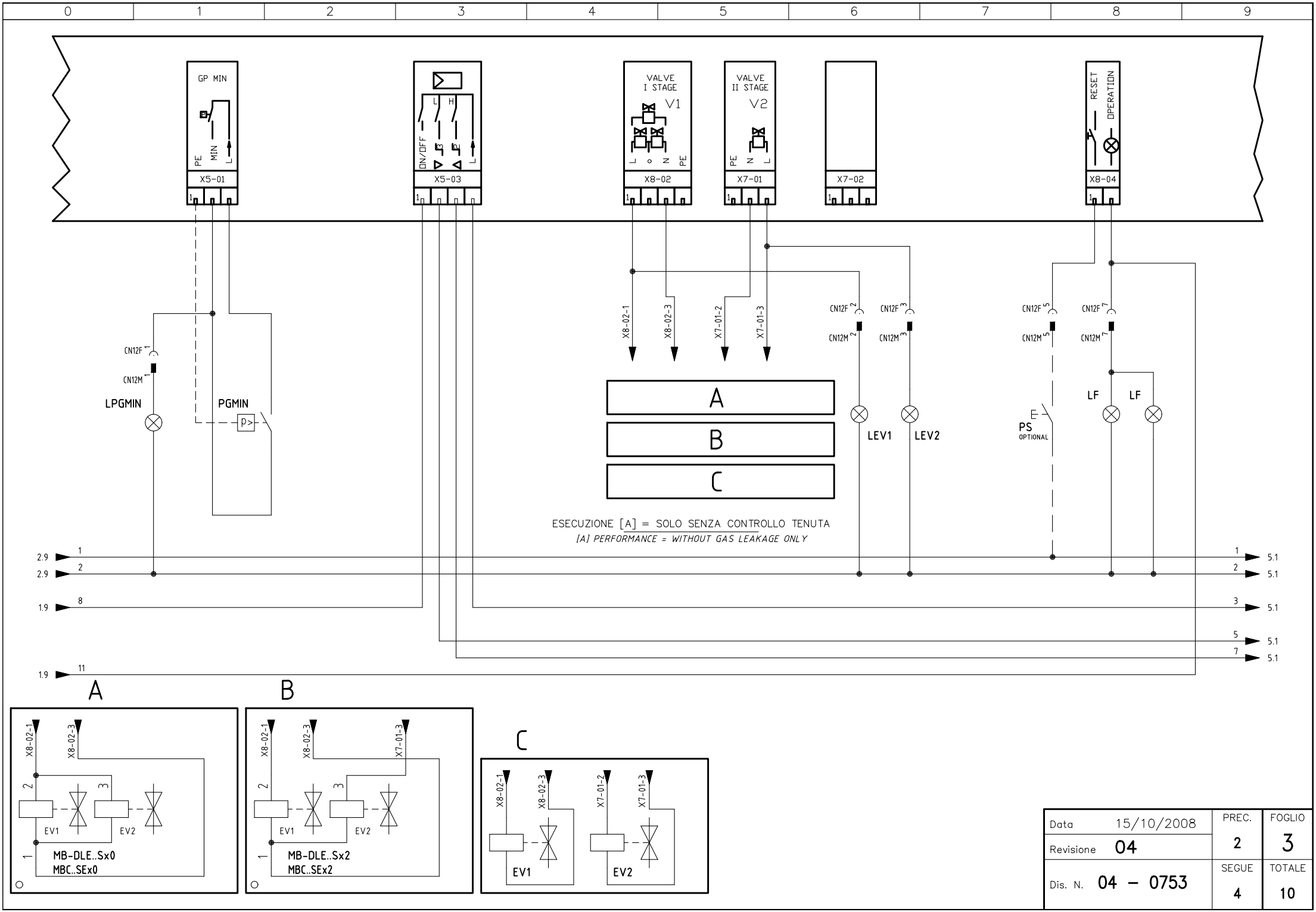

Data	15/10/2008	PREC.	FOGLIO
Revisione	04	2	3
Dis. N.	04 – 0753	SEGUE	TOTALE
		4	10

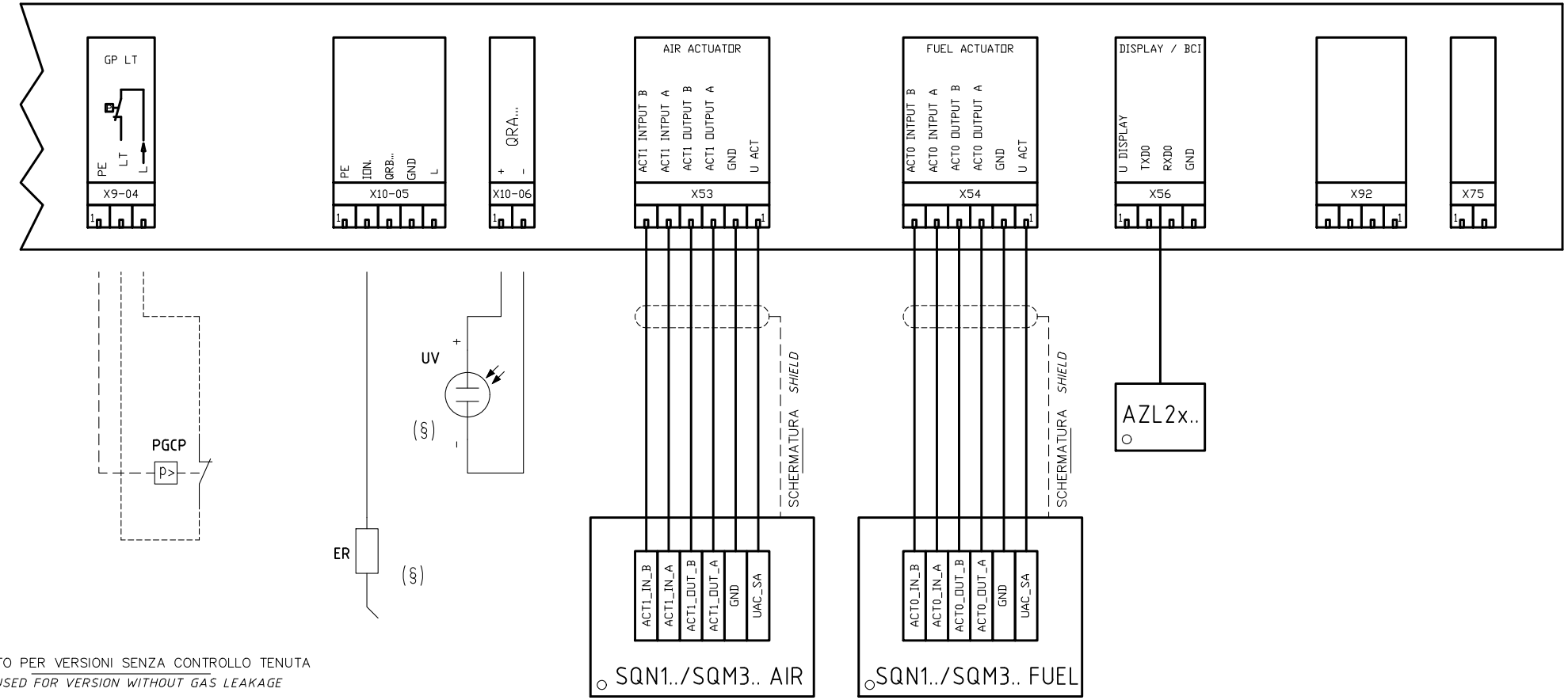

NON USATO PER VERSIONI SENZA CONTROLLO TENUTA
NOT USED FOR VERSION WITHOUT GAS LEAKAGE

(§)

SONDA [UV] IN ALTERNATIVA A SONDA [ER]
PROBE [UV] ALTERNATIVE TO PROBE [ER]

Data 15/10/2008		PREC.	FOGLIO
Revisione 04		3	4
Dis. N. 04 – 0753		SEGUE	TOTALE
		5	10

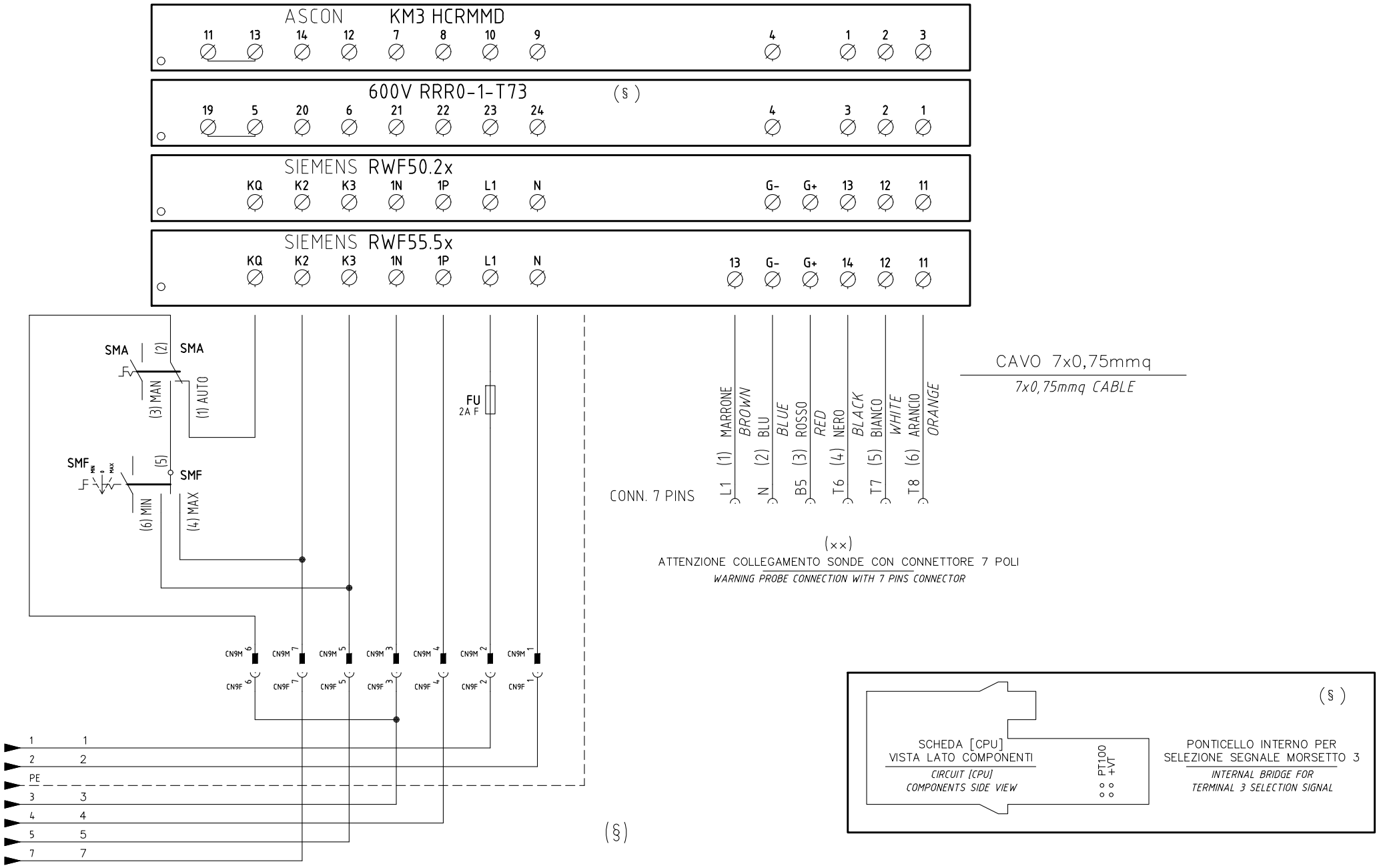

Data	15/10/2008	PREC.	FOGLIO
Revisione	04	4	5
Dis. N.	04 – 0753	SEGUE	TOTALE
		6	10

(xx)
ATTENZIONE COLLEGAMENTO SONDE CON CONNETTORE 7 POLI
WARNING PROBE CONNECTION WITH 7 PINS CONNECTOR

KM3 HCRMMD	600V RRR0-1-T73	RWF55.5x	RWF50.2x

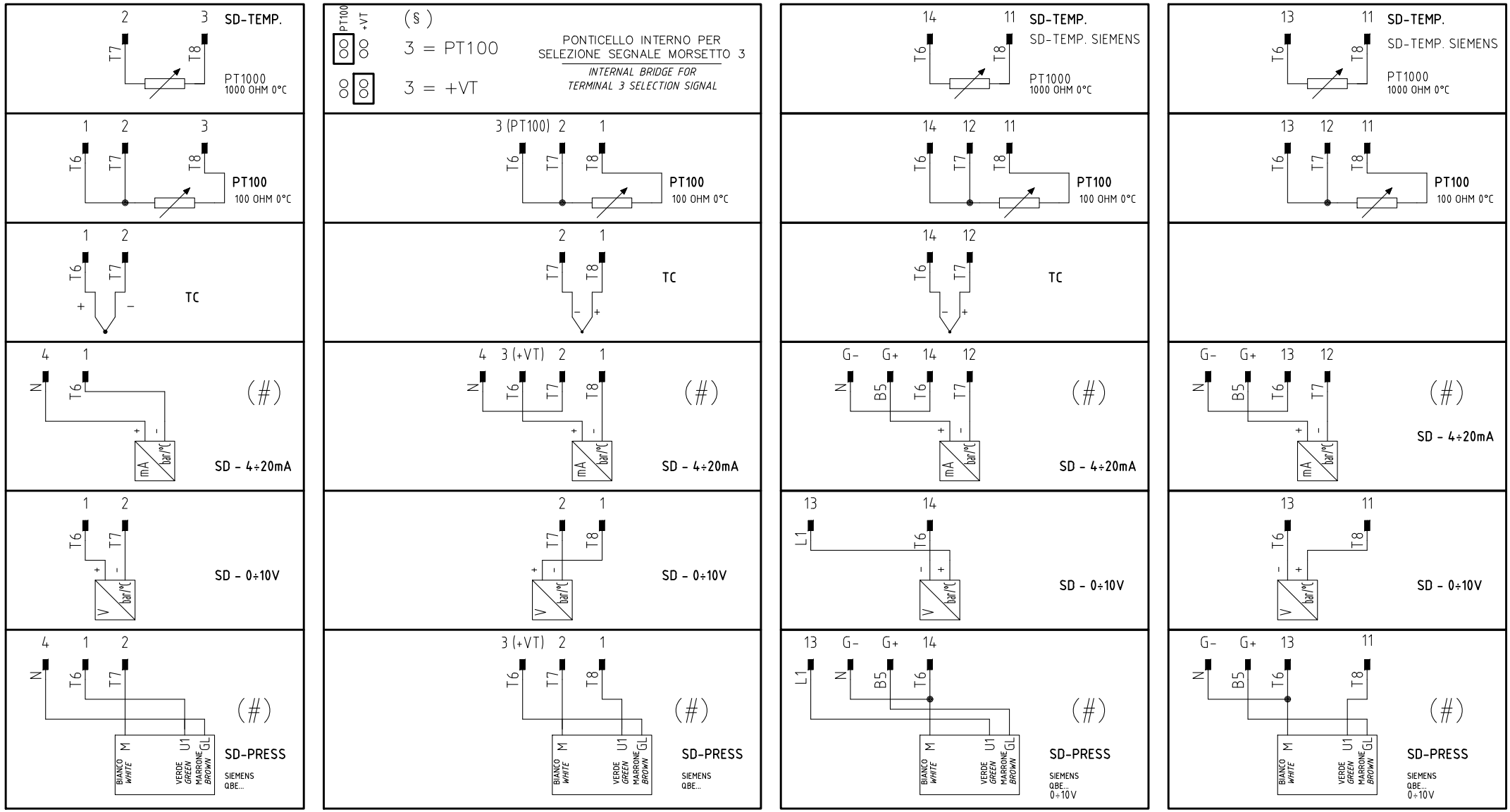

(#)
COLLEGAMENTO SOLO PER TRASDUTTORI PASSIVI
TRASDUCER PASSIVE CONNECTION ONLY

Data 15/10/2008	PREC. 5	FOGLIO 6
Revisione 04		
Dis. N. 04 – 0753	SEGUE 7	TOTALE 10

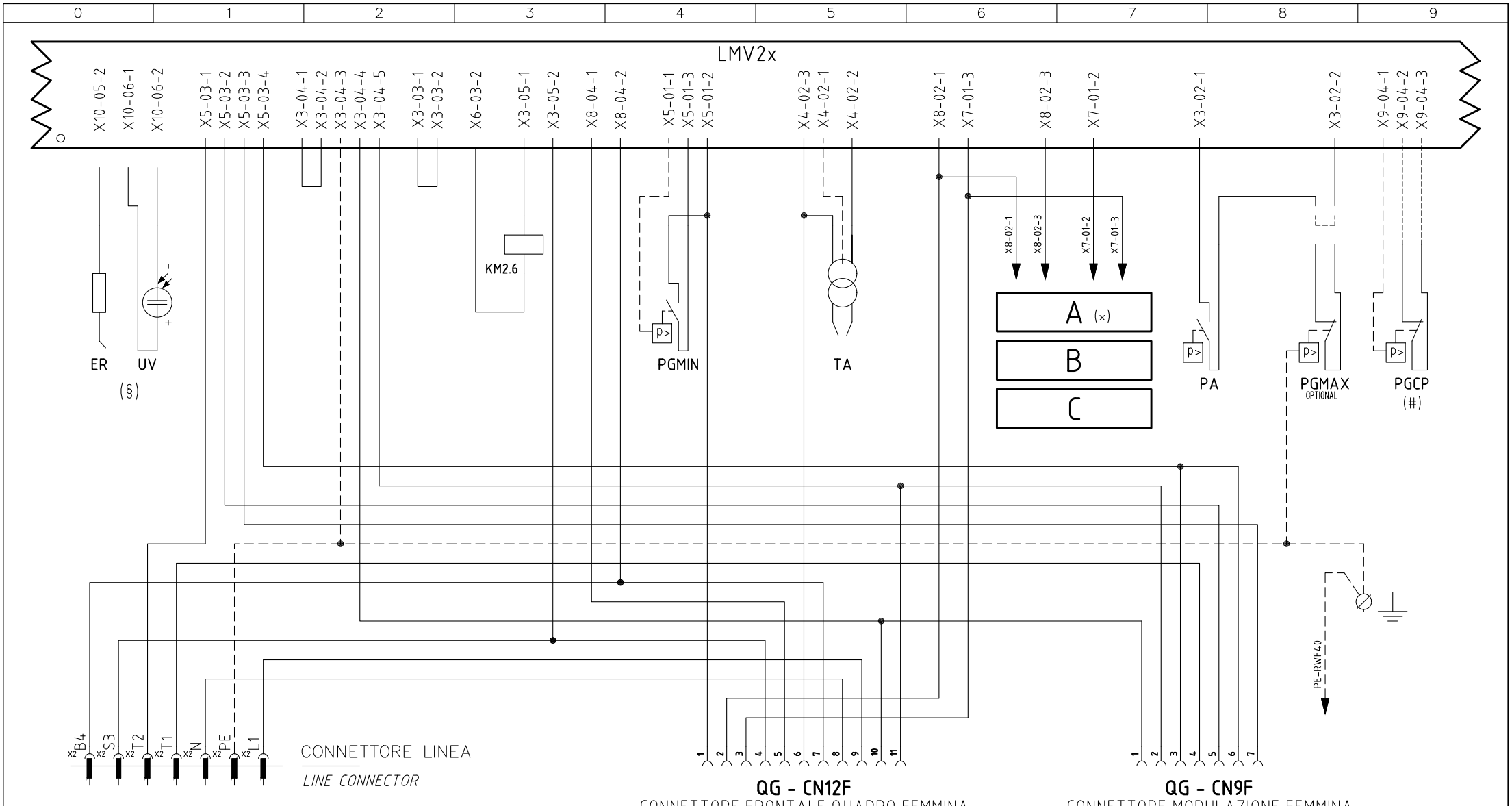

(§) SONDA [UV] IN ALTERNATIVA A SONDA [ER] *PROBE [UV] ALTERNATIVE TO PROBE [ER]*
(#) NON USATO PER VERSIONI SENZA CONTROLLO TENUTA *NOT USED FOR VERSION WITHOUT GAS LEAKAGE*
(x) ESECUZIONE [A] = SOLO SENZA CONTROLLO TENUTA *[A] PERFORMANCE = WITHOUT GAS LEAKAGE ONLY*

INTERFACCIA CONNETTORI [LMV2x]

CONNECTORS [LMV2x] INTERFACE

Data	15/10/2008	PREC.	FOGLIO
Revisione	04	6	7
Dis. N.	04 – 0753	SEGUE	TOTALE
		8	10

QG - CN12M
CONNETTORE FRONTALE QUADRO MASCHIO
FRONTAL BOX MALE CONNECTOR

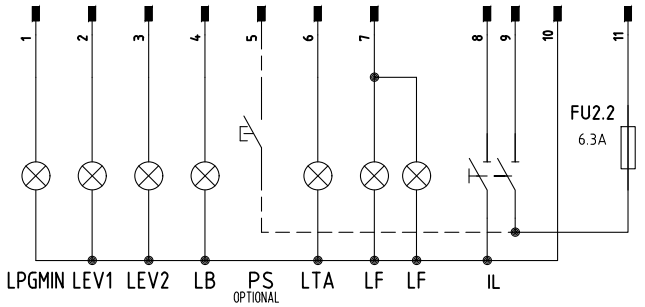

QG - CN9M
CONNETTORE MODULAZIONE MASCHIO
MODULATION MALE CONNECTOR

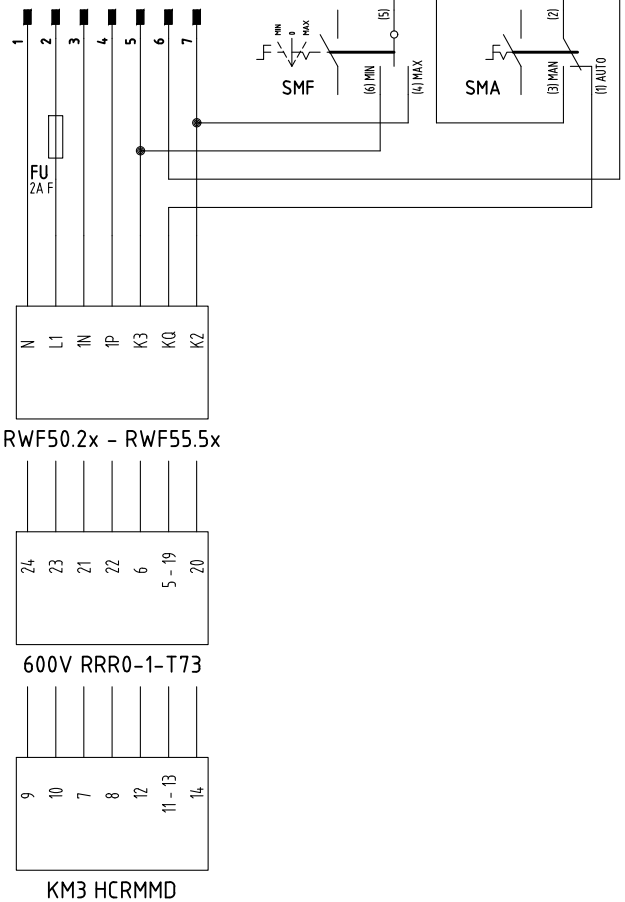

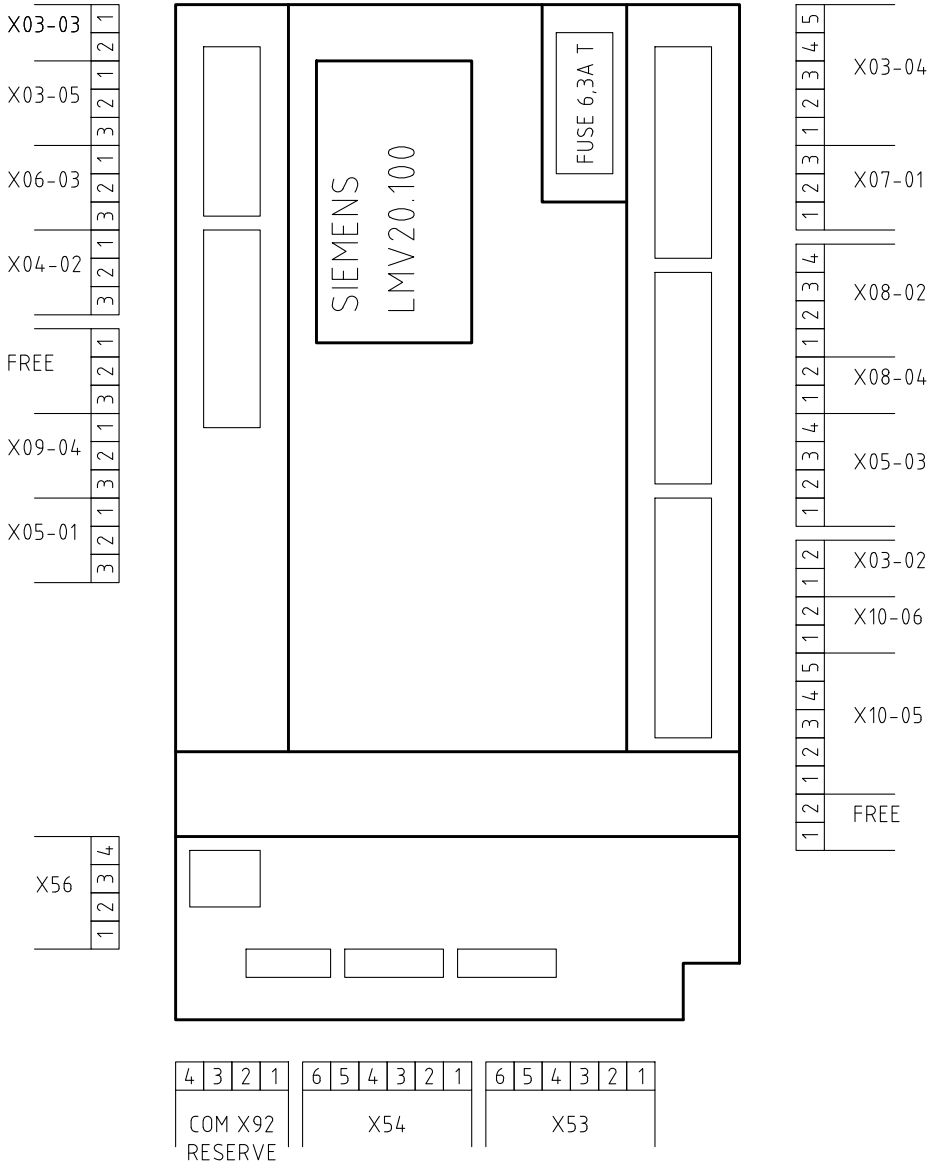

Data	15/10/2008	PREC.	FOGLIO
Revisione	04	7	8
Dis. N.	04 – 0753	SEGUE	TOTALE
		9	10

0	1	2	3	4	5	6	7	8	9

Sigla/Item	Foglio/Sheet	Funzione	Function
600V RRR0-1-T73	5	REGOLATORE MODULANTE (ALTERNATIVO)	BURNER MODULATOR (ALTERNATIVE)
AZL2x..	4	INTERFACCIA UTENTE	USER INTERFACE
C1	1	CONTAORE FUNZIONAMENTO	OPERATION TIME COUNTER
ER	4	ELETTRODO RILEVAZIONE FIAMMA	FLAME DETECTION ELECTRODE
EV1	3	ELETTROVALVOLA GAS LATO RETE	UPSTREAM GAS SOLENOID VALVE
EV2	3	ELETTROVALVOLA GAS LATO BRUCIATORE	DOWNSTREAM GAS SOLENOID VALVE
EVS	2	ELETTROVALVOLA GAS DI SICUREZZA (OPTIONAL)	SAFETY GAS SOLENOID VALVE (OPTIONAL)
FU	5	FUSIBILE	FUSE
FU1	1	FUSIBILE LINEA MOTORE VENTILATORE	FAN MOTOR LINE FUSE
FU2.2	2	FUSIBILE LINEA AUSILIARI	AUXILIARY LINE FUSE
FU3	1	FUSIBILE LINEA BRUCIATORE	BURNER LINE FUSE
IB	1	INTERRUTTORE LINEA BRUCIATORE	BURNER LINE SWITCH
IL	2	INTERRUTTORE LINEA AUSILIARI	AUXILIARY LINE SWITCH
IM	1	INTERRUTTORE LINEA MOTORE VENTILATORE	FAN MOTOR LINE SWITCH
KM2.6	2	CONTATTORE MOTORE VENTILATORE	FAN MOTOR CONTACTOR
KM3 HCRMMD	5	REGOLATORE MODULANTE (ALTERNATIVO)	BURNER MODULATOR (ALTERNATIVE)
LB	2	LAMPADA SEGNALAZIONE BLOCCO BRUCIATORE	INDICATOR LIGHT FOR BURNER LOCK-OUT
LB1	1	LAMPADA SEGNALAZIONE BLOCCO BRUCIATORE	INDICATOR LIGHT FOR BURNER LOCK-OUT
LBF	1	LAMPADA SEGNALAZIONE BASSA FIAMMA BRUCIATORE	BURNER IN LOW FLAME INDICATOR LIGHT
LEV1	3	LAMPADA SEGNALAZIONE APERTURA [EV1]	INDICATOR LIGHT FOR OPENING OF ELECTRO-VALVE [EV1]
LEV2	3	LAMPADA SEGNALAZIONE APERTURA [EV2]	INDICATOR LIGHT FOR OPENING OF ELECTRO-VALVE [EV2]
LF	3	LAMPADA SEGNALAZIONE FUNZIONAMENTO BRUCIATORE	INDICATOR LIGHT BURNER OPERATION
LF	3	LAMPADA SEGNALAZIONE FUNZIONAMENTO BRUCIATORE	INDICATOR LIGHT BURNER OPERATION
LMV20.100	2	APPARECCHIATURA DI COMANDO	CONTROL SCHEME
LPGMIN	3	LAMPADA SEGNALAZIONE PRESENZA GAS IN RETE	INDICATOR LIGHT FOR PRESENCE OF GAS IN THE NETWORK
LTA	2	LAMPADA SEGNALAZIONE TRASFORMATORE DI ACCENSIONE	IGNITION TRANSFORMER INDICATOR LIGHT
MB-DLE..Sx0	3	GRUPPO VALVOLE GAS	GAS VALVES GROUP
MB-DLE..Sx2	3	GRUPPO VALVOLE GAS	GAS VALVES GROUP
MBC..SEx0	3	GRUPPO VALVOLE GAS (ALTERNATIVO)	GAS VALVES GROUP (ALTERNATIVE)
MBC..SEx2	3	GRUPPO VALVOLE GAS (ALTERNATIVO)	GAS VALVES GROUP (ALTERNATIVE)
MV	1	MOTORE VENTILATORE	FAN MOTOR
PA	2	PRESSOSTATO ARIA	AIR PRESSURE SWITCH

0	1	2	3	4	5	6	7	8	9

Sigla/Item	Foglio/Sheet	Funzione	Function
PGCP	4	PRESSOSTATO GAS CONTROLLO PERDITE (OPTIONAL)	GAS LEAKAGE PRESSURE SWITCH (OPTIONAL)
PGMAX	2	PRESSOSTATO GAS DI MASSIMA PRESSIONE (OPTIONAL)	MAXIMUM PRESSURE GAS SWITCH (OPTIONAL)
PGMIN	3	PRESSOSTATO GAS DI MINIMA PRESSIONE	MINIMUM GAS PRESSURE SWITCH
PS	3	PULSANTE SBLOCCO BRUCIATORE	BURNER UNLOCK BUTTON
PT100	6	SONDA DI TEMPERATURA	TEMPERATURE PROBE
RWF50.2x	5	REGOLATORE MODULANTE	BURNER MODULATOR
RWF55.5x	5	REGOLATORE MODULANTE (ALTERNATIVO)	BURNER MODULATOR (ALTERNATIVE)
SD-PRESS	6	SONDA DI PRESSIONE	PRESSURE PROBE
SD-TEMP.	6	SONDA DI TEMPERATURA	TEMPERATURE PROBE
SD - 0÷10V	6	TRASDUTTORE USCITA IN TENSIONE	TRANSDUCER VOLTAGE OUTPUT
SD - 4÷20mA	6	TRASDUTTORE USCITA IN CORRENTE	TRANSDUCER CURRENT OUTPUT
SMA	5	SELETTORE MANUALE/AUTOMATICO	MANUAL/AUTOMATIC SWITCH
SMF	5	SELETTORE MANUALE FUNZIONAMENTO MIN-0-MAX	MIN-0-MAX MANUAL OPERATION SWITCH
SQN1../SQM3.. AIR	4	SERVOCOMANDO SERRANDA ARIA	AIR DAMPER ACTUATOR
SQN1../SQM3.. FUEL	4	SERVOCOMANDO COMBUSTIBILE	FUEL ACTUATOR
ST	1	SERIE TERMOSTATI/PRESSOSTATI	SERIES OF THERMOSTATS OR PRESSURE SWITCHES
TA	2	TRASFORMATORE DI ACCENSIONE	IGNITION TRANSFORMER
TC	6	TERMOCOPPIA	THERMOCOUPLE
TS	1	TERMOSTATO/PRESSOSTATO DI SICUREZZA	SAFETY THERMOSTAT OR PRESSURE SWITCH
UV	4	SONDA UV RILEVAZIONE FIAMMA (ALTERNATIVA)	UV FLAME DETECTOR (ALTERNATIVE)

C.I.B. UNIGAS S.p.A.
Via L.Galvani, 9 - 35011 Campodarsego (PD) - ITALY
Tel. +39 049 9200944 - Fax +39 049 9200945/9201269
web site: www.cibunigas.it - e-mail: cibunigas@cibunigas.it

Note: specifications and data subject to change. Errors and omissions excepted.

AZL2x - LMV2x/3x
Burner Management System

Service manual

M12916CD Rev. 3.4 03/2023

INDEX

MICROPROCESSOR CONTROLLED SYSTEM 6

User interface 6

Parameters level (heating engineer) 8

Setting menu 9

Block 000: Internal Parameter 10

Block 100: General information 10

Block 200: Burner control 13

Block 400: Setting air/fuel ratio curves 25

Block 500: Air/fuel ratio control 26

Block 600: Actuators 28

Block 700: Error history 31

Block 900: Process data 32

Actuators references 33

Gas proving system 33

Air-fuel curve points 33

COMMISSIONING THE BURNER 34

Warm setting 38

Cold setting 39

BURNER STARTUP WITH LMV2x ALREADY PROGRAMMED 40

Reset / manual lockout 42

Timeout for menu operation 42

Entering the Parameter levels 43

Info level 44

Service level 46

PHASES LIST 47

BACKUP PARAMETER WITH AZL2x 48

RESTORE PARAMETER FROM AZL2x TO LMV.. 49

WIRING DIAGRAM 65

Wiring connection for LMV20 65

Wiring variants for LMV27 66

Wiring variants for LMV26 67

Wiring variants for LMV37 68

DANGERS, WARNINGS AND NOTES OF CAUTION

THIS MANUAL IS SUPPLIED AS AN INTEGRAL AND ESSENTIAL PART OF THE PRODUCT AND MUST BE DELIVERED TO THE USER.

INFORMATION INCLUDED IN THIS SECTION ARE DEDICATED BOTH TO THE USER AND TO PERSONNEL FOLLOWING PRODUCT INSTALLATION AND MAINTENANCE.

THE USER WILL FIND FURTHER INFORMATION ABOUT OPERATING AND USE RESTRICTIONS, IN THE SECOND SECTION OF THIS MANUAL. WE HIGHLY RECOMMEND TO READ IT.

CAREFULLY KEEP THIS MANUAL FOR FUTURE REFERENCE.

1) GENERAL INTRODUCTION

- The equipment must be installed in compliance with the regulations in force, following the manufacturer's instructions, by qualified personnel.
- Qualified personnel means those having technical knowledge in the field of components for civil or industrial heating systems, sanitary hot water generation and particularly service centres authorised by the manufacturer.
- Improper installation may cause injury to people and animals, or damage to property, for which the manufacturer cannot be held liable.
- Remove all packaging material and inspect the equipment for integrity.

In case of any doubt, do not use the unit - contact the supplier.

The packaging materials (wooden crate, nails, fastening devices, plastic bags, foamed polystyrene, etc), should not be left within the reach of children, as they may prove harmful.

- Before any cleaning or servicing operation, disconnect the unit from the mains by turning the master switch OFF, and/or through the cut-out devices that are provided.
- Make sure that inlet or exhaust grilles are unobstructed.
- In case of breakdown and/or defective unit operation, disconnect the unit. Make no attempt to repair the unit or take any direct action.

Contact qualified personnel only.

Units shall be repaired exclusively by a servicing centre, duly authorised by the manufacturer, with original spare parts.

Failure to comply with the above instructions is likely to impair the unit's safety.

To ensure equipment efficiency and proper operation, it is essential that maintenance operations are performed by qualified personnel at regular intervals, following the manufacturer's instructions.

- When a decision is made to discontinue the use of the equipment, those parts likely to constitute sources of danger shall be made harmless.
- In case the equipment is to be sold or transferred to another user, or in case the original user should move and leave the unit behind, make sure that these instructions accompany the equipment at all times so that they can be consulted by the new owner and/or the installer.
- For all the units that have been modified or have options fitted then original accessory equipment only shall be used.
- This unit shall be employed exclusively for the use for which it is meant. Any other use shall be considered as improper and, therefore, dangerous.

The manufacturer shall not be held liable, by agreement or otherwise, for damages resulting from improper installation, use and failure to comply with the instructions supplied by the manufacturer.The occurrence of any of the following circustances may cause explosions, polluting unburnt gases (example: carbon monoxide CO), burns, serious harm to people, animals and things:

- Failure to comply with one of the WARNINGS in this chapter
- Incorrect handling, installation, adjustment or maintenance of the burner
- Incorrect use of the burner or incorrect use of its parts or optional supply

2) SPECIAL INSTRUCTIONS FOR BURNERS

- The burner should be installed in a suitable room, with ventilation openings complying with the requirements of the regulations in force, and sufficient for good combustion.
- Only burners designed according to the regulations in force should be used.
- This burner should be employed exclusively for the use for which it was designed.
- Before connecting the burner, make sure that the unit rating is the same as delivery mains (electricity, gas oil, or other fuel).
- Observe caution with hot burner components. These are, usually, near to the flame and the fuel pre-heating system, they become hot during the unit operation and will remain hot for some time after the burner has stopped.

When the decision is made to discontinue the use of the burner, the user shall have qualified personnel carry out the following operations:

a Remove the power supply by disconnecting the power cord from the mains.

b) Disconnect the fuel supply by means of the hand-operated shut-off valve and remove the control handwheels from their spindles.

Special warnings

- Make sure that the burner has, on installation, been firmly secured to the appliance, so that the flame is generated inside the appliance firebox.
- Before the burner is started and, thereafter, at least once a year, have qualified personnel perform the following operations:

a set the burner fuel flow rate depending on the heat input of the appliance;

b set the flow rate of the combustion-supporting air to obtain a combustion efficiency level at least equal to the lower level required by the regulations in force;

c check the unit operation for proper combustion, to avoid any harmful or polluting unburnt gases in excess of the limits permitted by the regulations in force;

d make sure that control and safety devices are operating properly;

e make sure that exhaust ducts intended to discharge the products of combustion are operating properly;

f on completion of setting and adjustment operations, make sure that all mechanical locking devices of controls have been duly tightened;

g make sure that a copy of the burner use and maintenance instructions is available in the boiler room.

- In case of a burner shut-down, reser the control box by means of the RESET pushbutton. If a second shut-down takes place, call the Technical Service, **without trying to RESET further**.
- The unit shall be operated and serviced by qualified personnel only, in compliance with the regulations in force.

3) GENERAL INSTRUCTIONS DEPENDING ON FUEL USED

3a) ELECTRICAL CONNECTION

- For safety reasons the unit must be efficiently earthed and installed as required by current safety regulations.
- It is vital that all saftey requirements are met. In case of any doubt, ask for an accurate inspection of electrics by qualified personnel, since the manufacturer cannot be held liable for damages that may be caused by failure to correctly earth the equipment.
- Qualified personnel must inspect the system to make sure that it is adequate to take the maximum power used by the equipment shown on the equipment rating plate. In particular, make sure that the system cable cross section is adequate for the power absorbed by the unit.
- No adaptors, multiple outlet sockets and/or extension cables are permitted to connect the unit to the electric mains.
- An omnipolar switch shall be provided for connection to mains, as required by the current safety regulations.
- The use of any power-operated component implies observance of a few basic rules, for example:
  - do not touch the unit with wet or damp parts of the body and/or with bare feet;
  - do not pull electric cables;

- do not leave the equipment exposed to weather (rain, sun, etc.) unless expressly required to do so;
- do not allow children or inexperienced persons to use equipment;

- The unit input cable shall not be replaced by the user.

In case of damage to the cable, switch off the unit and contact qualified personnel to replace.

When the unit is out of use for some time the electric switch supplying all the power-driven components in the system (i.e. pumps, burner, etc.) should be switched off.

3b) FIRING WITH GAS, LIGHT OIL OR OTHER FUELS

GENERAL

- The burner shall be installed by qualified personnel and in compliance with regulations and provisions in force; wrong installation can cause injuries to people and animals, or damage to property, for which the manufacturer cannot be held liable.
- Before installation, it is recommended that all the fuel supply system pipes be carefully cleaned inside, to remove foreign matter that might impair the burner operation.
- Before the burner is commissioned, qualified personnel should inspect the following:

a the fuel supply system, for proper sealing;

b the fuel flow rate, to make sure that it has been set based on the firing rate required of the burner;

c the burner firing system, to make sure that it is supplied for the designed fuel type;

d the fuel supply pressure, to make sure that it is included in the range shown on the rating plate;

e the fuel supply system, to make sure that the system dimensions are adequate to the burner firing rate, and that the system is equipped with all the safety and control devices required by the regulations in force.

- When the burner is to remain idle for some time, the fuel supply tap or taps should be closed.

SPECIAL INSTRUCTIONS FOR USING GAS

Have qualified personnel inspect the installation to ensure that:

a the gas delivery line and train are in compliance with the regulations and provisions in force;

b all gas connections are tight;

c the boiler room ventilation openings are such that they ensure the air supply flow required by the current regulations, and in any case are sufficient for proper combustion.

- Do not use gas pipes to earth electrical equipment.
- Never leave the burner connected when not in use. Always shut the gas valve off.
- In case of prolonged absence of the user, the main gas delivery valve to the burner should be shut off.

Precautions if you can smell gas

a do not operate electric switches, the telephone, or any other item likely to generate sparks;

b immediately open doors and windows to create an air flow to purge the room;

c close the gas valves;

d contact qualified personnel.

- Do not obstruct the ventilation openings of the room where gas appliances are installed, to avoid dangerous conditions such as the development of toxic or explosive mixtures.

DIRECTIVES AND STANDARDS

Gas burners

European directives:

- Directive 2009/142/EC - Gas Appliances;
- Directive 2006/95/EC on low voltage;
- Directive 2004/108/EC on electromagnetic compatibility

Harmonised standards :

-UNI EN 676 (Gas Burners;-EN 55014-1Electromagnetic compatibility - Requirements for household appliances, electric tools and similar apparatus.

-CEI EN 60335-1(Household and similar electrical appliances - Safety. Part 1: General requirements;

-EN 50165 (Electrical equipment of non-electric appliances for household and similar purposes. Safety requirements.

-EN 60335-2-102 (Household and similar electrical appliances. Safety. Particular requirements for gas, oil and solid-fuel burning appliances having electrical connections)

Light oil burners

European directives:

- Directive 2006/95/EC on low voltage;
- Directive 2004/108/EC on electromagnetic compatibility

Harmonised standards :

-CEI EN 60335-1(Household and similar electrical appliances - Safety. Part 1: General requirements;

-UNI 267 Automatic forced draught burners for liquid fuels

-EN 55014-1Electromagnetic compatibility - Requirements for household appliances, electric tools and similar apparatus.

-EN 50165 (Electrical equipment of non-electric appliances for household and similar purposes. Safety requirements.

National standards :

-UNI 7824: Monobloc nebulizer burners for liquid fuels. Characteristics and test methods

Heavy oil burners

European directives:

- Directive 2006/95/EC on low voltage;
- Directive 2004/108/EC on electromagnetic compatibility

Harmonised standards :

-CEI EN 60335-1 Household and similar electrical appliances - SafetyPart 1: General requirements;

-EN 55014-1Electromagnetic compatibility - Requirements for household appliances, electric tools and similar apparatus.

- EN 50165 Electrical equipment of non-electric appliances for household and similar purposes. Safety requirements.

National standards :

-UNI 7824: Monobloc nebulizer burners for liquid fuels. Characteristics and test methods

Gas - Light oil burners

European directives:

- Directive 2009/142/EC - Gas Appliances;
- Directive 2006/95/EC on low voltage;
- Directive 2004/108/EC on electromagnetic compatibility

Harmonised standards :

-UNI EN 676 Gas Burners

-EN 55014-1Electromagnetic compatibility - Requirements for household appliances, electric tools and similar apparatus.

-UNI 267 Automatic forced draught burners for liquid fuels

-CEI EN 60335-1(Household and similar electrical appliances - Safety. Part 1: General requirements;

- EN 50165 Electrical equipment of non-electric appliances for household and similar purposes. Safety requirements.

National standards :

-UNI 7824: Monobloc nebulizer burners for liquid fuels. Characteristics and test methods

Gas - Heavy oil burners

European directives:

- Directive 2009/142/EC - Gas Appliances;
- Directive 2006/95/EC on low voltage;
- Directive 2004/108/EC on electromagnetic compatibility

Harmonised standards :

-EN 55014-1Electromagnetic compatibility - Requirements for household appliances, electric tools and similar apparatus.

-UNI EN 676 (Gas Burners;

-CEI EN 60335-1(Household and similar electrical appliances - Safety. Part 1: General requirements;

- EN 50165 Electrical equipment of non-electric appliances for household and similar purposes. Safety requirements.

National standards :

-UNI 7824: Monobloc nebulizer burners for liquid fuels. Characteristics and test methods

Industrial burners

European directives:

- Directive 2009/142/EC - Gas Appliances;
- Directive 2006/95/EC on low voltage;
- Directive 2004/108/EC on electromagnetic compatibility

Harmonised standards :

-EN 55014-1Electromagnetic compatibility - Requirements for household appliances, electric tools and similar apparatus.

-EN 50165 Electrical equipment of non-electric appliances for household and similar purposes. Safety requirements.

-UNI EN 746-2: Industrial thermoprocessing equipment

Burner data plate

For the following information, please refer to the data plate:

- burner type and burner model: must be reported in any communication with the supplier
- burner ID (serial number): must be reported in any communication with the supplier
- date of production (year and month)
- information about fuel type and network pressure

Type	--
Model	--
Year	--
S.Number	--
Output	--
Oil Flow	--
Fuel	--
Category	--
Gas Pressure	--
Viscosity	--
El.Supply	--
El.Consump.	--
Fan Motor	--
Protection	--
Drwaing n°	--
P.I.N.	--

SYMBOLS USED

WARNING!	Failure to observe the warning may result in irreparable damage to the unit or damage to the environment
DANGER!	Failure to observe the warning may result in serious injuries or death.
WARNING!	Failure to observe the warning may result in electric shock with lethal consequences

MICROPROCESSOR CONTROLLED SYSTEM

The control system is made of the Siemens LMV central unit that performs all the burner control functions and of the Siemens AZL local programming unit that interfaces the system with the user.

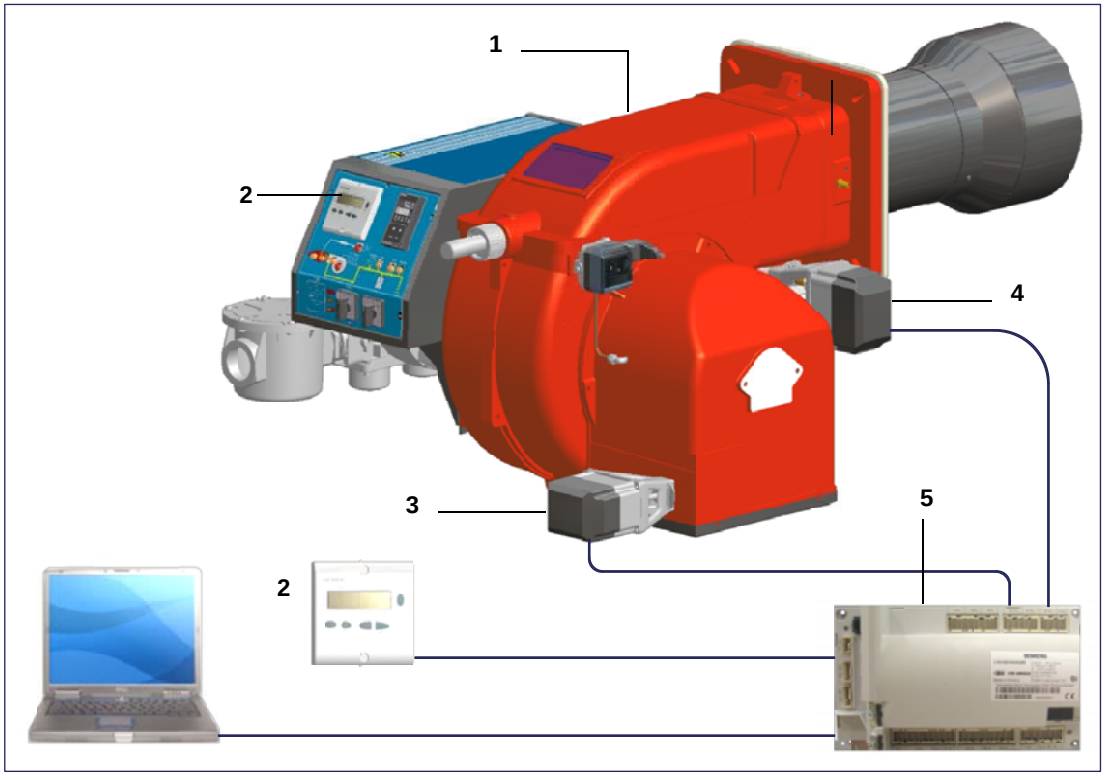

Keys

1 Burner
2 AZL2..
3 Air actuator
4 Fuel actuator
5 LMV2..

User interface

The AZL2x.. display/programming unit is shown below:

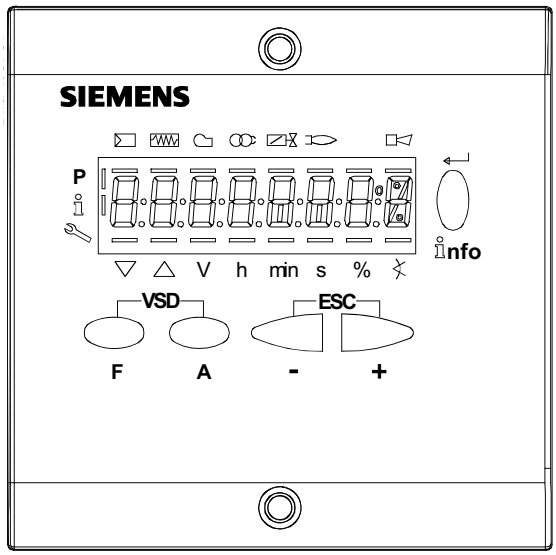

The keys functions are the following:

Key F
Used to adjust the “fuel” actuator position (**F**uel): :
While pressing the **F** key, the “fuel” actuator position can be changed by means of the **+** and **-** keys.

Key A
Used to adjust the “air” actuator position (**A**ir):
While pressing the **A** key, the “air” actuator position can be changed by means of the **+** and **-** keys.

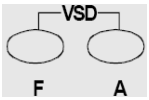

Key F + A
While pressing the two keys contemporarly, the **code** message will appear: by entering the proper password it is possible to access the **Service** mode.

Info and Enter keys
Used for **Info** and **Service** menues
Used as **Enter** key in the setting modes
Used as **Reset** key in the burner operation mode
Used to enter a lower level menu

-Key -
Used to decrease a a value
Used to enter Info and Serivce during the curve adjustments

+Key +
Used to increase a a value
Used to enter Info and Serivce during the curve adjustments

Keys (+ & -)= ESC
By pressing + and - at the same time, the ESCAPE function is perfomed:

to enter a lower level menu

The display will show these data:

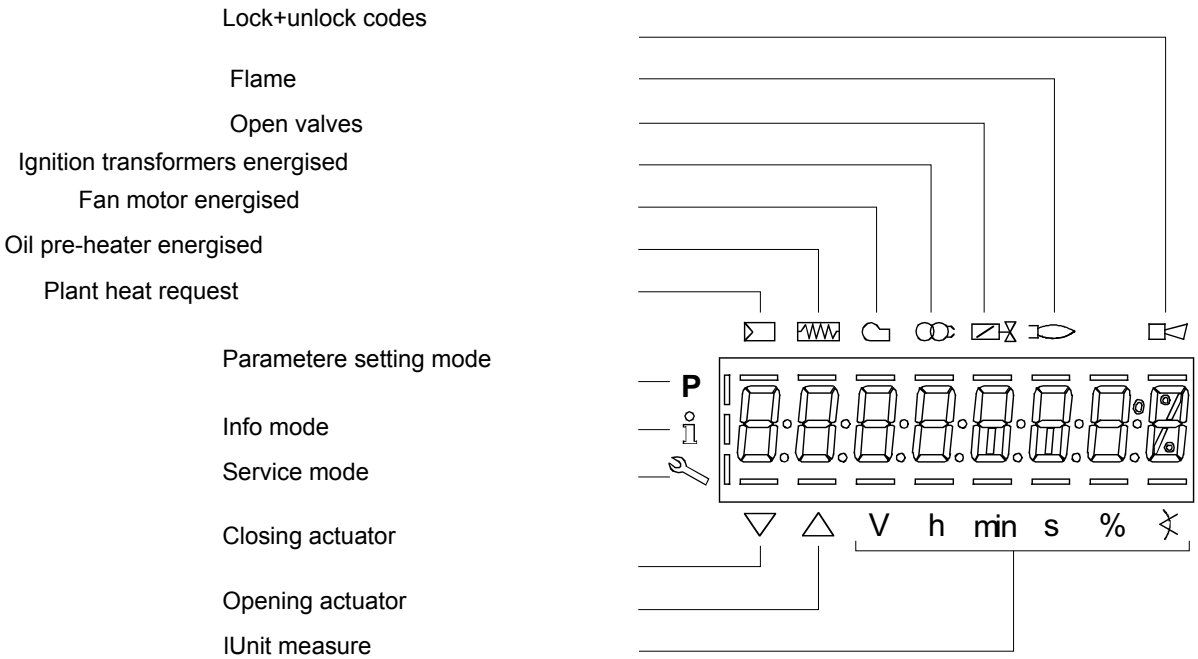

Parameters level (heating engineer)

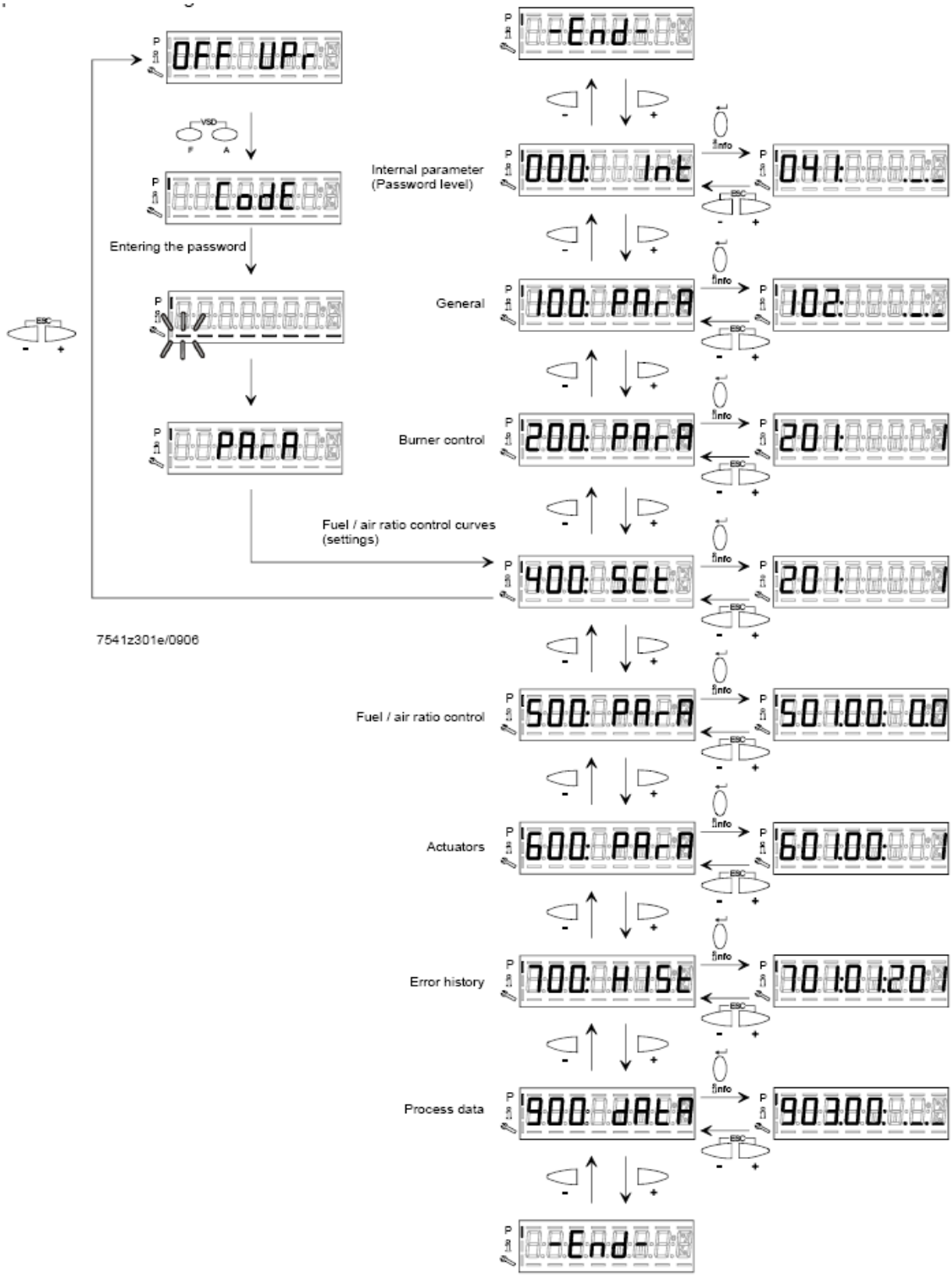

Setting menu

The seeting menu is divided into different blocks:

Bloc.	Descrizione	Description	Password
000		Internal parameters	OEM / Service
100	Informazioni generali	General	OEM / Service / Info
200	Controllo bruciatore	Burner control	OEM / Service
300	Controllo bruciatore (solo **LMV26**)	Burner control (**LMV26** only)	OEM / Service
400	Curve rapporto	Ratio curves	OEM / Service
500	Controllo rapporto	Ratio control	OEM / Service
600	Servocomandi	Actuators	OEM / Service
700	Storico errori	Error history	OEM / Service / Info
900	Dati di processo	Process data	OEM / Service / Info

The access to the various blocks is allowed by passwords. Passwords are divided into three levels:

- User level (info): no password needed
- Service level (Service)
- Manifacturer level (OEM)

Block 000: Internal Parameter

Param.	Descrizione	Description	Password
041	Password livello assistenza (ingegnere del calore)	Password heating engineer (4 characters)	OEM
042	Password livello OEM (costruttore del bruciatore)	Password OEM (5 characters)	OEM
050	Start backup/restore via AZL2x/PC	Start backup / restore via AZL2.../ PC software (set parameter to 1) Index 0: Create backup Index 1: Execute restore Error diagnostics via negative values (see error code 137)	SO
055	Identificazione bruciatore (backup dati)	Burner identification of AZL2... backup data set	SO
056		ASN extraction of AZL2... backup data set	SO
057	Versione software creata dal set dati backup	Software version when creating the AZL2... backup data set	Service / Info

Block 100: General information

Param.	Descrizione	Description	Password	LMV20 LMV27	LMV26	LMV37
102	Data produzione (in gg-mm-aa)	Identification date (yy-mm-dd)	Service / Info	x	x	x
103	Numero identificativ	Identification number	Service / Info	x	x	x
104	Set di parametri preimpostati: codice cliente	Preselected parameter set: customer code	Service / Info	x	x	x
105	Set di parametri preimpostati: versione	Preselected parameter set: version	Service / Info	x	x	x
107	Versione softwar	Software version	Service / Info	x	x	x
108	Variante software	Software variant	Service / Info	x	x	x
113	Identificativo bruciatore	Burner identification	Service / Info SO password for writing	x	x	x
121	Potenza manuale Valore “Undefined = automatico Impostare un valore inferiore a = in modo che il display mostri --- altrimenti, il controllore rimarrà sempre in stand-by e il display mostrerà la scritta OFF lampeggiante.	Manual output Undefined = automatic mode	Service / Info	x	x	x

125	Frequenza di rete 0 = 50 Hz 1 = 60 Hz	Mains frequency 0 = 50 Hz 1 = 60 Hz	Service / Info	x	x	x
126	Luminosità display	Display brightness	Service / Info	x	x	x
127	Tempo dopo il quale, se non viene premuto nessun tast il software esce dalla modalita programmazione (valore fabbrica = 60min - range impostazione: 10 - 120 min)	Timeout for menu operation (default value = 60min - range: 10 - 120 min)	OEM	x	x	x
130	Azzeramento Storico errori Impostare prima il parametro a 1 e poi a 2; se compare “0” = lo Storico è stato azzerato se compare “-1” = scaduto tempo sequ. 1_2	Delete display of error history To delete display : set to 1 then to 2; return value “0” = error history deleted return value “-1” = timeout of 1_2 sequence	OEM / Service	x	x	x
141	Attivazione comunicazione bus 0 = off 1 = Modbus 2 = riserva	Operating mode BACS 0 = off 1 = Modbus 2 = reserved	OEM / Service		x	x
142	Tempo d'arresto in caso di guasto di comunicazione	Setback time in the event of communication breakdown	OEM / Service		x	x
143	Riserva	Reserved	Service / Info		x	x
144	Riserva	Reserved	OEM / Service		x	x
145	Indirizzo dispositivo per Modbus	Device address for Modbus	OEM / Service		x	x
146	Velocità di trasmissione per Modbus	Baud rate for Modbus	OEM / Service		x	x
147	Parità per Modbus	Parity for Modbus	OEM / Service		x	x
148	on una interruzione della comunicazione bus: 0 ... 19.9 = bruciatore spento 20 ... 100 = 20 ... 100% potenza Per il funzionamento multistadio: 0 = bruciatore OFF, P1, P2, P3 non valido = nessun standard di prestazione della LMV.	Performance standard at interruption of communication with building automation For modulation operation the setting range is as fol-lows: 0…19.9 = burner off 20…100 = 20…100% burner rating For multistage operation apply to setting range: 0 = burner OFF, P1, P2, P3 Invalid = no performance standards of the building auto-mation	OEM / Service		x	x
161	Numero di avarie	Number of faults	Service / Info	x	x	x
162	Ore di esercizio (azzerabile da Service)	Operating hours (resettable by Service)	Service / Info	x	x	x
163	Ore di esercizio (con dispositivo sotto tensione)	Operating hours (when unit is live)	Service / Info	x	x	x
164	Numero di partenze (azzerabile da Service)	Number of startups (resettable by Service)	Service / Info	x	x	x
165	Numero di partenze	Number of startups	Service / Info	x	x	x

166	Numero totale di partenze (non azzerabile)	Total number of startups	Service / Info	x	x	x
167	Volume combustibile (azzerabile da OEM)	Fuel volume (resettable by OEM)	Service / Info	x	x	x
172	Fuel 1(secondo combustibile)Ore di esercizio (azzerabile da Service)	Fuel 1: Operation hours resettable	Service / Info		x	
174	Fuel 1 (secondo combustibile) Numero di partenze (azzerabile da Service)	Fuel 1: Number of startups resettable	Service / Info		x	
175	Fuel 1 (secondo combustibile) Numero di partenze	Fuel 1: Number of startups	Service / Info		x	
177	Fuel 1 (secondo combustibile) Volume combustibile (azzerabile da OEM)	Fuel 1: Fuel volume resettable (m^3, l, ft^3, gal)	Service / Info		x	

Param.	Descrizione	Description	Password	LMV20 LMV27	LMV26	LMV37
201	Modalità funzionamento bruciatore (rampa combustibile, modulante / multistadio, servo-comandi, ecc.) __= non definito (cancellazione curve) **1** = accensione diretta a gas (G mod) **2** = accensione tramite pilota gas con attacco tra le due elettrovalvole EV1/EV2 del gas (Gp1 mod) **3** = accensione tramite pilota gas con attacco a monte dell'elettrovalvola EV1 del gas (Gp2 mod) **4** = accensione a gasolio - modulante (Lo mod) **5** = accensione a gasolio - bistadio (Lo 2 stage) **6** = accensione a gasolio - tristadio (Lo 3 stage) **7** = accensione diretta a gas - regolazione pneumatica (G mod pneu) **8** = accensione tramite pilota gas con attacco tra le due elettrovalvole EV1/EV2 del gas - regolazione pneumatica (Gp1 mod pneu) **9** = accensione tramite pilota gas con attacco a monte dell'elettrovalvola EV1 del gas - regolazione pneumatica (Gp2 mod pneu)	Burner operating mode (fuel train, modulating / multistage, actuators, etc..) __= undefined (delete curves) **1** = gas direct ignition (G mod) **2** = ignition by gas pilot connected between the two gas solenoid valves EV1/EV2 (Gp1 mod) **3** = ignition by gas pilot connected upstream the gas EV1 (Gp2 mod) **4** = light oil ignition - modulating (Lo mod) **5** = light oil ignition - double stage (Lo 2 stage) **6** = light oil ignition - three stage (Lo 3 stage) **7** = gas direct ignition - pneumatic regulation (G mod pneu) **8** = ignition by gas pilot connected between the two gas solenoid valves EV1/EV2 - pneumatic regulation (Gp1 mod pneu) **9** = ignition by gas pilot connected upstream the gas EV1 - pneumatic regulation (Gp2 mod pneu)	OEM / Service	x	x	x
	10 = olio modulante con accensione tramite pilota (LOGp mod) **11** = olio 2 stadi con accensione tramite pilota (LOGp 2-stage) **12** = olio modulante con 2 valvole combustibile (LOmod 2 valvole) **13** = olio modulante con 2 valvole combustibile e con accensione tramite pilota (LOGp 2 valvole) **14** = gas modulante pneumatico senza servomotori (Gmod pneu)	**10** = LoGp mod **11** = LoGp 2-stage **12** = Lo mod 2 fuel valves **13** = LoGp mod 2 fuel valves **14** = G mod pneu without actuator				

	15 = gas rampa Gp1 modulante pneumatico senza servomotori (Gp1 mod pneu) **16** = gas rampa Gp2 modulante pneumatico senza servomotori (Gp2 mod pneu) **17** = olio LO 2 stadi senza servomotori **18** = olio LO 3 stadi senza servomotori **19** = gas Gmod con solo servomotore gas **20** = gas Gp1 mod con solo servomotore gas **21** = gas Gp2 mod con solo servomotore gas **22** = olio LO mod con solo servomotore olio	**15** = Gp1 mod pneu without actuator **16** = Gp2 mod pneu without actuator **17** = Lo 2-stage without actuator **18** = Lo 3-stage without actuator **19** = G mod gas actuator only **20** = Gp1 mod gas actuator only **21** = Gp2 mod gas actuator only **22** = Lo mod oil actuator only				
208	Stop programma **0** = non attivo **1** = posizione preventilazione (Ph24 - fase 24 del programma) **2** = posizione accensione (Ph36 - fase 36 del programma) **3** = intervallo di tempo 1 (Ph44 - fase 44 del programma) **4** = intervallo di tempo 2 (Ph52 - fase 52 del programma)	Program stop **0** = deactivated **1** = pre-purge position (Ph24 - program phase 24) **2** = ignition position (Ph36 - program phase 36) **3** = interval 1 (Ph44 - program phase 44) **4** = interval 2 (Ph52 - program phase 52)	OEM / Service	x	x	x
210	Allarme impedimento avviamento **0** = non attivo **1** = attivo	Alarm in the event of start prevention **0** = deactivated **1** = activated	OEM / Service	x	x	x
211	Tempo aumento giri ventilatore (valore fabbrica = 2s - range impostazione: 2 - 60 s)	Fan ramp up time (default value = 2s - range: 2 - 60 s)	OEM / Service	x	x	x
212	Tempo massimo raggiungimento bassa fiamma (valore fabbrica = 45 s - range impostazione: 0.2 s - 10 min) Stabilisce il massimo intervallo di tempo durante il quale il bruciatore raggiunge la minima potenza e poi si spegne	Maximum time down to low-fire (default value = 45 s - range: 0.2 s - 10 min) It states the maximum time interval during which the burner drives to the low output and then turns off	OEM / Service		x	
213	Tempo minimo raggiungimento posizione di stand by (valore fabbrica = 2 s - range impostazione: 2 - 60 s)	Min. time home run (default value = 2 s - range: 2 - 60 s)	OEM	x	x	x
214	Tempo massimo inizio partenza	Max. time start release	OEM	x	x	x
215	Limite ripetizioni catena di sicurezza (valore fabbrica = 16 - range impostazione:1 - 16)	Repetition limit safety loop (default value = 16 - range: 1 - 16)	OEM / Service	x	x	x
217	Tempo massimo per rilevazione segnale (valore fabbrica = 30s - range impostazione: 5s - 10 min)	Max. time to detector signal (default value = 30s - range: 5s - 10 min)	OEM	x	x	x

221	Gas: sonda rilevazione fiamma attivo (valore fabbrica = 1)	Gas: active detector flame evaluation (default value = 1) **0** = QRB../QRC.. **1** = ION / QRA..	OEM / Service	x	x	x
222	Gas: Preventilazione (valore fabbrica = 1) **1** = attivo **0** = non attivo ATTENZIONE : In ambito civile la norma EN676 rende obbligatoria la preventilazione. In ambito industriale, vedere i casi in cui la norma EN746-2 prevede la possibilità di non fare la preventilazione. In questi ultimi casi il bruciatore deve essere costruito obbligatoriamente con controllo di tenuta e valvole gas in classe A	Gas: Pre-purging (default value = 1) **1** = active **0** = deactivated WARNING: in the civil field, the prepurge is mandatory according to the standard EN676. In the industrial fiels, check if the pre purge can be avoided according to the stanrds EN746-2 If the prepurge is not performed, the burner must be equipped with two valves and the proving system.	OEM / Service	x	x	x
223	Limite ripetizioni pressostato gas di minima pressione (valore fabbrica = 16 - range impostazione:1 - 16)	Repetition limit pressure switch-min-gas (default value = 16 - range:1 - 16)	OEM / Service	x	x	x
225	Gas: tempo di preventilazione (valore fabbrica = 20s - range impostazione:20s - 60min)	Gas: Prepurge time (default value = 20s - range:20s - 60min)	OEM / Service	x	x	x
226	Gas: tempo di preaccensione (valore fabbrica = 2s - range impostazione:0.2s - 60min)	Gas: Preignition time (default value = 2s - range: 0.2s - 60min)	OEM / Service	x	x	x
227	Gas: tempo di sicurezza 1 (TSA1) (valore fabbrica = 3s - range impostazione:0.2 - 10s)	Gas: Safety time 1 (TSA1) (default value = 3s - range: 0.2 - 10s)	OEM	x	x	x
229	Gas: tempo di risposta a cadute di pressione entro TSA1 e TSA2 (valore fabbrica = 1.8s - range impostazione:0.2s - 9.8s)	Gas: time to respond to pressure faults in TSA1 e TSA2 (default value = 1.8s - range: 0.2s - 9.8s)	OEM	x	x	x
230	Gas: Intervallo 1 (valore fabbrica = 2s - range impostazione:0.2s - 60min)	Gas: Interval 1 (default value = 2s - range: 0.2s - 60min)	OEM / Service	x	x	x
231	Gas: tempo di sicurezza 2 (TSA2) (valore fabbrica = 3s - range impostazione:0.2 - 10s)	Gas: Safety time 2 (TSA2) (default value = 3s - range:0.2 - 10s)	OEM	x	x	x
232	Gas: Intervallo 2 (valore fabbrica = 2s - range impostazione:0.2s - 60min)	Gas: Interval 2 (default value = 2s - range:0.2s - 60min)	OEM / Service	x	x	
233	Gas: Tempo postcombustione (valore fabbrica = 8s - range impostazione:0.2s - 60s)	Gas: postcombustion time (default value = 8s - range:0.2s - 60s)	OEM / Service	x	x	x
234	Gas: Tempo postventilazione (valore fabbrica = 0.2s - range impostazione:0.2s - 180min)	Gas: Postpurge time (default value = 0.2s - range:0.2s - 180min)	OEM / Service	x	x	x

236	Gas: Pressostato gas di minima (default = 1) 0 = inattivo 1 = pressostato gas di minima (a monte valvola V1) 2 = controllo perditavalvole via pressostato (montato tra le valvole V1 e V2)	Gas: Pressure switch-min input 0 = inactive 1 = pressure switch-min (upstream of fuel valve 1 (V1)) 2 = valve proving via pressure switch-min (between fuel valves 1 (V1) and 2 (V2))	OEM / Service	x	x	
237	Gas: Pressostato gas di massima / ingresso-POC 0 = inattivo 1= pressostato gas di massima 2= POC 3 = pressostato controllo perdite	Gas: Pressure switch-max / POC input 0 = inactive 1 = pressure switch-max 2 = POC 3 = pressure switch valve proving			x	x
239	Gas: Forzatura al funzionamento intermittente 0 = disattivato 1 = attivato Attenzione : di default questo parametro è attivo = (1); esso è modificabile solo su LMV37. Dal punto di vista della sicurezza, il funzionamento continuo è valido esclusivamente per bruciatori di gas con elettrodo di rilevazione.	Gas: Forced intermittent operation 0 = deactivated 1 = activated	OEM			x
240	Limite ripetizioni perdita di fiamma (valore fabbrica = 2 - range impostazione:1 - 2)	Repetition limit loss of flame (default value= 2 - range:1 - 2)	OEM	x	x	x
241	Gas: esecuzione controllo tenuta (valore fabbrica = 2) **0** = no controllo tenuta **1** = controllo tenuta in avviamento **2** = controllo tenuta in arresto **3** = controllo tenuta in arresto e in avviamento	Gas: execution proving test (default value= 2) **0** = no proving test **1** = proving test on startup **2** = proving test on shutdown **3** = proving test on shutdown and on startup	OEM / Service	x	x	x
242	Gas: tempo evacuazione controllo tenuta (valore fabbrica = 3s - range impostazione:0.2s - 10s)	Gas: proving test evacuation time (default value = 3s - range:0.2s - 10s)	OEM	x	x	x

243	Gas: tempo pressione atmosferica controllo tenuta (valore fabbrica = 10s - range impostazione:0.2s - 60s)	Gas: proving test time atmospheric pressure (default value = 10s - range:0.2s - 60s)	OEM	x	x	x
244	Gas: tempo riempimento controllo tenuta (valore fabbrica = 3s - range impostazione:0.2s - 10s)	Gas: proving test filling time (default value = 3s - range:0.2s - 10s)	OEM	x	x	x
245	Gas: tempo test pressione gas (valore fabbrica = 10s - range impostazione:0.2s - 60s)	Gas: proving test time gas pressure (default value = 10s - range:0.2s - 60s)	OEM	x	x	x
246	Gas: tempo attesa consenso pressostato di minima (valore fabbrica = 10s - range impostazione:0.2s - 60s) Se la pressione del gas è troppo bassa, in fase 22 non verrà eseguito l'avviamento: il sistema compie un numero impostabile di tentativi finché non si arriva al blocco. Il tempo di attesa tra un tentativo e il successivo viene raddoppiato ad ogni tentativo.	Gas: waiting time gas shortage (default value = 10s - range:0.2s - 60s) If the gas pressure is too low, in phase 22 the startup will not be performed: the system tries for a certain number of times the it locks out. The time interval between two attempts is doubled at each attempt.	OEM	x	x	x
248	Gas: Tempo di post-ventilazione 3 (abortito con regolatore di potenza (LR)-ON	Gas: Postpurge time 3 (abortion with load controller (LR)-ON	OEM / Service	x	x	x
261	Olio: sonda rilevazione fiamma attivo (valore fabbrica = 0) **0** = QRB../QRC.. **1** = ION / QRA..	Oil: active detector flame evaluation (default value = 0) **0** = QRB../QRC.. **1** = ION / QRA..	OEM / Service	x	x	x
262	Olio: preventilazione (valore fabbrica = 1) **1** = attivo **0** = non attivo In ambito civile la norma EN267 rende obbligatoria la preventilazione. In ambito industriale, vedere i casi in cui la norma EN746-2 prevede la possibilità di non fare la preventilazione.	Oil: prepurging (default value = 1) **0** = deactivated **1** = activated **0** = deactivated WARNING: in the civil field, the prepurge is mandatory according to the standard EN267. In the industrial fiels, check if the pre purge can be avoided according to the standard EN746-2	OEM / Service	x	x	x
265	Olio: tempo preventilazione (valore fabbrica = 15s - range impostazione:15s - 60min)	Oil: prepurging time (default value = 15s - range:15s - 60min)	OEM / Service	x	x	x
266	Olio: tempo preaccensione (valore fabbrica = 2s - range impostazione:0.2s - 60min)	Oil: preignition time (default value = 2s - range:0.2s - 60min)	OEM / Service	x	x	x
267	Olio: tempo di sicurezza 1 (TSA1) (valore fabbrica = 5s - range impostazione:0.2 - 15s)	Oil: safety time 1 (TSA1) (default value = 5s - range:0.2 - 15s)	OEM	x	x	x
269	Olio: tempo di risposta a cadute di pressione entro TSA1 e TSA2 (valore fabbrica = 1.8s - range impostazione:0.2s - 14.8s)	Oil: time to respond to pressure faults in TSA1 and TSA2 (default value = 1.8s - range:0.2s - 14.8s)	OEM	x	x	x

270	Olio: Intervallo 1 (valore fabbrica = 2s - range impostazione:0.2s - 60min)	Oil: Interval 1 (default value = 2s - range:0.2s - 60min)	OEM / Service	x	x	x
271	Olio: tempo di sicurezza 2 (TSA2) (valore fabbrica = 3s - range impostazione:0.2 - 10s)	Oil: safety time 2 (TSA2) (default value = 3s - range:0.2 - 10s)	OEM	x	x	x
272	Olio: Intervallo 2 (valore fabbrica = 2s - range impostazione:0.2s - 60min)	Oil: Interval 2 (default value = 2s - range:0.2s - 60min)	OEM / Service	x	x	x
273	Olio: Tempo postcombustione (valore fabbrica = 8s - range impostazione:0.2s - 60s)	Oil: Postcombustion time (default value = 8s - range:0.2s - 60s)	OEM / Service	x	x	x
274	Olio: Tempo postventilazione (valore fabbrica = 0.2s - range impostazione:0.2s - 180min)	Oil: Postpurging time (default value = 0.2s - range:0.2s - 180min)	OEM / Service	x	x	x
276	Olio : Pressostato olio di minima (default = 1) 0 = inattivo 1 = attivo dalla fase 38 2 = attivo dal tempo di sicurezza (TSA)	Oil. Pressure switch-min input 0 = inactive 1 = active from phase 38 2 = active from safety time (TSA)	OEM / Service	x	x	
277	Olio: Pressostato olio di massima / ingresso-POC 0 = inattivo 1= pressostato olio di massima 2= POC	Oil: Pressure switch-max/POC input 0 = inactive 1 = pressure switch-max 2 = POC			x	
279	Olio: Forzatura al funzionamento intermittente 0 = disattivato 1 = attivato Attenzione : di default questo parametro è attivo = (1); esso è modificabile solo su LMV37..	Oil: Forced intermittent operation 0 = deactivated 1 = activated	OEM		x	x
280	Limite ripetizioni perdita di fiamma (valore fabbrica = 2 - range impostazione:1 - 2)	Repetition limit value loss of flame (default value = 2 - range:1 - 2)	OEM	x	x	x
281	Olio: tempo iniezione olio (valore fabbr. = 1) **0** = preaccensione corta (Ph38 - fase programma 38) **1** = preaccensione lunga (con ventilatore) (Ph22 - fase programma 22)	Oil: time oil ignition (default value = 1) **0** = short preignition (Ph38-progr. phase 38) **1** = long preignition (with fan) (Ph22 - program phase 22)	OEM / Service	x	x	x
284	Olio: Tempo di post-ventilazione 3 (abortito con regolatore di potenza (LR)-ON	Oil: Postpurge time 3 (abortion with load controller (LR)-ON	OEM / Service	x	x	x

Block 300: Burner control (only with LMV26)

Param.	Descrizione	Description	Password	LMV20 LMV27	LMV26	LMV37
301	Combustibile 1 : Modalità funzionamento bruciatore (rampa combustibile, modulante / multistadio, servocomandi, ecc.) __= non definito (cancellazione curve) **1** = accensione diretta a gas (G mod) **2** = accensione tramite pilota gas con attacco tra le due elettrovalvole EV1/EV2 del gas (Gp1 mod) **3** = accensione tramite pilota gas con attacco a monte dell'elettrovalvola EV1 del gas (Gp2 mod) **4** = accensione a gasolio - modulante (Lo mod) **5** = accensione a gasolio - bistadio (Lo 2 stage) **6** = accensione a gasolio - tristadio (Lo 3 stage) **7** = accensione diretta a gas - regolazione pneumatica (G mod pneu) **8** = accensione tramite pilota gas con attacco tra le due elettrovalvole EV1/EV2 del gas - regolazione pneumatica (Gp1 mod pneu) **9** = accensione tramite pilota gas con attacco a monte dell'elettrovalvola EV1 del gas - regolazione pneumatica (Gp2 mod pneu) **10** = olio modulante con accensione tramite pilota (LOGp mod)	Fuel 1 : Burner operating mode (fuel train, modulating / multistage, actuators, etc..) __= undefined (delete curves) **1** = gas direct ignition (G mod) **2** = ignition by gas pilot connected between the two gas solenoid valves EV1/EV2 (Gp1 mod) **3** = ignition by gas pilot connected upstream the gas EV1 (Gp2 mod) **4** = light oil ignition - modulating (Lo mod) **5** = light oil ignition - double stage (Lo 2 stage) **6** = light oil ignition - three stage (Lo 3 stage) **7** = gas direct ignition - pneumatic regulation (G mod pneu) **8** = ignition by gas pilot connected between the two gas solenoid valves EV1/EV2 - pneumatic regulation (Gp1 mod pneu) **9** = ignition by gas pilot connected upstream the gas EV1 - pneumatic regulation (Gp2 mod pneu) **10** = LoGp mod	OEM / Service		x	

	11 = olio 2 stadi con accensione tramite pilota (LOGp 2-stage) **12** = olio modulante con 2 valvole combustibile (LOmod 2 valvole) **13** = olio modulante con 2 valvole combustibile e con accensione tramite pilota (LOGp 2 valvole) **14** = gas modulante pneumatico senza servomotori (Gmod pneu) **15** = gas rampa Gp1 modulante pneumatico senza servomotori (Gp1 mod pneu) **16** = gas rampa Gp2 modulante pneumatico senza servomotori (Gp2 mod pneu)	**11** = LoGp 2-stage **12** = Lo mod 2 fuel valves **13** = LoGp mod 2 fuel valves **14** = G mod pneu without actuator **15** = Gp1 mod pneu without actuator **16** = Gp2 mod pneu without actuator				
	17 = olio LO 2 stadi senza servomotori **18** = olio LO 3 stadi senza servomotori **19** = gas Gmod con solo servomotore gas **20** = gas Gp1 mod con solo servomotore gas **21** = gas Gp2 mod con solo servomotore gas **22** = olio LO mod con solo servomotore olio	**17** = Lo 2-stage without actuator **18** = Lo 3-stage without actuator **19** = G mod gas actuator only **20** = Gp1 mod gas actuator only **21** = Gp2 mod gas actuator only **22** = Lo mod oil actuator only			x	
321	Combustibile 1 - Gas: sonda rilevazione fiamma attivo (valore fabbrica = 1) - **0** = QRB../QRC.. **1** = ION / QRA..	Fuel 1 - Gas: active detector flame evaluation (default value = 1) **0** = QRB../QRC.. **1** = ION / QRA..	OEM / Service		x	
322	Combustibile 1 - Gas: Preventilazione (valore fabbrica = 1) **1** = attivo **0** = non attivo ATTENZIONE : In ambito civile la norma EN676 rende obbligatoria la preventilazione. In ambito industriale, vedere i casi in cui la norma EN746-2 prevede la possibilità di non fare la preventilazione. In questi ultimi casi il bruciatore deve essere costruito obbligatoriamente con controllo di tenuta e valvole gas in classe A.	Fuel 1 - Gas: Pre-purging (default value = 1) **1** = active **0** = deactivated WARNING: in the civil field, the prepurge is mandatory according to the standard EN676. In the industrial fiels, check if the pre purge can be avoided according to the stanrds EN746-2 If the prepurge is not performed, the burner must be equipped with two valves and the proving system.	OEM / Service		x	
323	Limite ripetizioni pressostato gas di minima pressione (valore fabbrica = 16 - range impostazione:1 - 16)	Repetition limit pressure switch-min-gas (default value = 16 - range:1 - 16)	OEM / Service		x	
325	Combustibile 1 - Gas: tempo di preventilazione (valore fabbrica = 20s - range impostazione:20s - 60min)	Fuel 1 - Gas: Prepurge time (default value = 20s - range:20s - 60min)	OEM / Service		x	

326	Combustibile 1 - Gas: tempo di preaccensione (valore fabbrica = 2s - range impostazione:0.2s - 60min)	Fuel 1 - Gas: Preignition time (default value = 2s - range: 0.2s - 60min)	OEM / Service		x	
327	Combustibile 1 - Gas: tempo di sicurezza 1 (TSA1) (valore fabbrica = 3s - range impostazione:0.2 - 10s)	Fuel 1 - Gas: Safety time 1 (TSA1) (default value = 3s - range: 0.2 - 10s)	OEM		x	
329	Combustibile 1 - Gas: tempo di risposta a cadute di pressione entro TSA1 e TSA2 (valore fabbrica = 1.8s - range impostazione:0.2s - 9.8s)	Fuel 1 - Gas: time to respond to pressure faults in TSA1 e TSA2 (default value = 1.8s - range: 0.2s - 9.8s)	OEM		x	
330	Combustibile 1 - Gas: Intervallo 1 (valore fabbrica = 2s - range impostazione:0.2s - 60min)	Fuel 1 - Gas: Interval 1 (default value = 2s - range: 0.2s - 60min)	OEM / Service		x	
331	Combustibile 1 - Gas: tempo di sicurezza 2 (TSA2) (valore fabbrica = 3s - range impostazione:0.2 - 10s)	Fuel 1 - Gas: Safety time 2 (TSA2) (default value = 3s - range:0.2 - 10s)	OEM		x	
332	Combustibile 1 - Gas: Intervallo 2 (valore fabbrica = 2s - range impostazione:0.2s - 60min)	Fuel 1 - Gas: Interval 2 (default value = 2s - range:0.2s - 60min)	OEM / Service		x	
333	Combustibile 1 - Gas: Tempo postcombustione (valore fabbrica = 8s - range impostazione:0.2s - 60s)	Fuel 1 - Gas: postcombustion time (default value = 8s - range:0.2s - 60s)	OEM / Service		x	
334	Combustibile 1 - Gas: Tempo postventilazione (valore fabbrica = 0.2s - range impostazione:0.2s - 180min)	Fuel 1 - Gas: Postpurge time (default value = 0.2s - range:0.2s - 180min)	OEM / Service		x	
336	Combustibile 1 - Gas: Pressostato gas di minima (default = 1) 0 = inattivo 1 = pressostato gas di minima (a monte valvola V1) 2 = controllo perditavalvole via pressostato (montato tra le valvole V1 e V2)	Fuel 1 - Gas: Pressure switch-min input 0 = inactive 1 = pressure switch-min (upstream of fuel valve 1 (V1)) 2 = valve proving via pressure switch-min (between fuel valves 1 (V1) and 2 (V2))	OEM / Service		x	
337	Combustibile 1 - Gas: Pressostato gas di massima / ingressoPOC 0 = inattivo 1= pressostato gas di massima 2= POC 3 = pressostato controllo perdite	Fuel 1 - Gas: Pressure switch-max / POC input 0 = inactive 1 = pressure switch-max 2 = POC 3 = pressure switch valve proving			x	

340	Limite ripetizioni perdita di fiamma (valore fabbrica = 2 - range impostazione:1 - 2)	Repetition limit loss of flame (default value= 2 - range:1 - 2)	OEM		x	
341	Combustibile 1 - Gas: esecuzione controllo tenuta (valore fabbrica = 2) **0** = no controllo tenuta **1** = controllo tenuta in avviamento **2** = controllo tenuta in arresto **3** = controllo tenuta in arresto e in avviamento	Fuel 1 - Gas: execution proving test (default value= 2) **0** = no proving test **1** = proving test on startup **2** = proving test on shutdown **3** = proving test on shutdown and on startup	OEM / Service		x	
342	Combustibile 1 - Gas: tempo evacuazione controllo tenuta (valore fabbrica = 3s - range impostazione:0.2s - 10s)	Fuel 1 - Gas: proving test evacuation time (default value = 3s - range:0.2s - 10s)	OEM		x	
343	Combustibile 1 - Gas: tempo pressione atmosferica controllo tenuta (valore fabbrica = 10s - range impostazione:0.2s - 60s)	Fuel 1 - Gas: proving test time atmospheric pressure (default value = 10s - range:0.2s - 60s)	OEM		x	
344	Combustibile 1 - Gas: tempo riempimento controllo tenuta (valore fabbrica = 3s - range impostazione:0.2s - 10s)	Fuel 1 - Gas: proving test filling time (default value = 3s - range:0.2s - 10s)	OEM		x	
345	Combustibile 1 - Gas: tempo test pressione gas (valore fabbrica = 10s - range impostazione:0.2s - 60s)	Fuel 1 - Gas: proving test time gas pressure (default value = 10s - range:0.2s - 60s)	OEM		x	
346	Combustibile 1 - Gas: tempo attesa consenso pressostato di minima (valore fabbrica = 10s - range impostazione:0.2s - 60s) Se la pressione del gas è troppo bassa, in fase 22 non verrà eseguito l'avviamento: il sistema compie un numero impostabile di tentativi finché non si arriva al blocco. Il tempo di attesa tra un tentativo e il successivo viene raddoppiato ad ogni tentativo.	Fuel 1 - Gas: waiting time gas shortage (default value = 10s - range:0.2s - 60s) If the gas pressure is too low, in phase 22 the startup will not be performed: the system tries for a certain number of times the it locks out. The time interval between two attempts is doubled at each attempt.	OEM		x	
348	Combustibile 1 - Gas: Tempo di post-ventilazione 3 (abortito con regolatore di potenza (LR)-ON	Fuel 1 - Gas: Postpurge time 3 (abortion with load controller (LR)-ON	OEM / Service		x	
361	Combustibile 1 - Olio: sonda rilevazione fiamma attivo (valore fabbrica = 0) **0** = QRB../QRC.. **1** = ION / QRA..	Fuel 1 - Oil: active detector flame evaluation (default value = 0) **0** = QRB../QRC.. **1** = ION / QRA..	OEM / Service		x	

362	Combustibile 1 - Olio: preventilazione (valore fabbrica = 1) **1** = attivo **0** = non attivo In ambito civile la norma EN267 rende obbligatoria la preventilazione. In ambito industriale, vedere i casi in cui la norma EN746-2 prevede la possibilità di non fare la preventilazione.	Fuel 1 - Oil: prepurging (default value = 1) **0** = deactivated **1** = activated **0** = deactivated WARNING: in the civil field, the prepurge is mandatory according to the standard EN267. In the industrial fiels, check if the pre purge can be avoided according to the standard EN746-2	OEM / Service		x	
365	Combustibile 1 - Olio: tempo preventilazione (valore fabbrica = 15s - range impostazione:15s - 60min)	Fuel 1 - Oil: prepurging time (default value = 15s - range:15s - 60min)	OEM / Service		x	
366	Combustibile 1 - Olio: tempo preaccensione (valore fabbrica = 2s - range impostazione:0.2s - 60min)	Fuel 1 - Oil: preignition time (default value = 2s - range:0.2s - 60min)	OEM / Service		x	
367	Combustibile 1 - Olio: tempo di sicurezza 1 (TSA1) (valore fabbrica = 5s - range impostazione:0.2 - 15s)	Fuel 1 - Oil: safety time 1 (TSA1) (default value = 5s - range:0.2 - 15s)	OEM		x	
369	Combustibile 1 - Olio: tempo di risposta a cadute di pressione entro TSA1 e TSA2 (valore fabbrica = 1.8s - range impostazione:0.2s - 14.8s)	Fuel 1 - Oil: time to respond to pressure faults in TSA1 and TSA2 (default value = 1.8s - range:0.2s - 14.8s)	OEM		x	
370	Combustibile 1 - Olio: Intervallo 1 (valore fabbrica = 2s - range impostazione:0.2s - 60min)	Fuel 1 - Oil: Interval 1 (default value = 2s - range:0.2s - 60min)	OEM / Service		x	
371	Combustibile 1 - Olio: tempo di sicurezza 2 (TSA2) (valore fabbrica = 3s - range impostazione:0.2 - 10s)	Fuel 1 - Oil: safety time 2 (TSA2) (default value = 3s - range:0.2 - 10s)	OEM		x	
372	Combustibile 1 - Olio: Intervallo 2 (valore fabbrica = 2s - range impostazione:0.2s - 60min)	Fuel 1 - Oil: Interval 2 (default value = 2s - range:0.2s - 60min)	OEM / Service		x	
373	Combustibile 1 - Olio: Tempo postcombustione (valore fabbrica = 8s - range impostazione:0.2s - 60s)	Fuel 1 - Oil: Postcombustion time (default value = 8s - range:0.2s - 60s)	OEM / Service		x	
374	Combustibile 1 - Olio: Tempo postventilazione (valore fabbrica = 0.2s - range impostazione:0.2s - 180min)	Fuel 1 - Oil: Postpurging time (default value = 0.2s - range:0.2s - 180min)	OEM / Service		x	
377	Combustibile 1 - Olio: Pressostato olio di massima / ingressoPOC 0 = inattivo 1= pressostato olio di massima 2= POC	Fuel 1 - Oil: Pressure switch-max/POC input 0 = inactive 1 = pressure switch-max 2 = POC			x	

380	Limite ripetizioni perdita di fiamma (valore fabbrica = 2 - range impostazione:1 - 2)	Repetition limit value loss of flame (default value = 2 - range:1 - 2)	OEM		x	
381	Combustibile 1 - Olio: tempo iniezione olio (valore fabbr. = 1) **0** = preaccensione corta (Ph38 - fase programma 38) **1** = preaccensione lunga (con ventilatore) (Ph22 - fase programma 22)	Fuel 1 - Oil: time oil ignition (default value = 1) **0** = short preignition (Ph38-progr. phase 38) **1** = long preignition (with fan) (Ph22 - program phase 22)	OEM / Service		x	
384	Combustibile 1 - Olio: Tempo di post-ventilazione 3 (abortito con regolatore di potenza (LR)-ON	Fuel 1 - Oil: Postpurge time 3 (abortion with load controller (LR)-ON	OEM / Service		x	

Block 400: Setting air/fuel ratio curves

Param.	Descrizione	Description	Password	LMV20 LMV27	LMV26	LMV37
401	Curve controllo servocomando combustibile (F): si accede alla lista dei punti da impostare (da P0 a P9) - consultare paragrafo “Impostazione curve”	Ratio control curve fuel actuator (F): it accesses to the parameter list of the points to be set (P0 to P9) - see paragrapf “Setting the curves”	OEM / Service	x	x	x
402	Curve controllo servocomando aria (A): si accede alla lista dei punti da impostare (da P0 a P9) - consultare paragrafo “Impostazione curve”	Ratio control curve air actuator (A): it accesses to the parameter list of the points to be set (P0 to P9) - see paragraph “Setting the curves”	OEM / Service	x	x	x
403	Curve controllo inverter (F + A): si accede alla lista dei punti da impostare (da P0 a P9) - consultare paragrafo “Impostazione curve”	Ratio control curves VSD (curve setting only)	SO		x	x
404	Combustibile 1 - Curve controllo servocomando combustibile 1 (F): si accede alla lista dei punti da impostare (da P0 a P9) - consultare paragrafo “Impostazione curve”	Fuel 1: Ratio control curves fuel actuator (curve setting only)	SO		x	
405	Combustibile 1 - Curve controllo servocomando aria (A): si accede alla lista dei punti da impostare (da P0 a P9) - consultare paragrafo “Impostazione curve”	Fuel 1: Ratio control curves air actuator (curve setting only)	SO		x	
406	Combustibile 1 - Curve controllo inverter (F + A): si accede alla lista dei punti da impostare (da P0 a P9) - consultare paragrafo “Impostazione curve”	Fuel 1: Ratio control curves VSD (curve setting only)	SO		x	

Block 500: Air/fuel ratio control

Param.	Descrizione	Description	Password	LMV20 LMV27	LMV26	LMV37
501	Posizione **servocomando combustibile** in assenza di fiamma (no-flame) **Indice 0** = posizione di sosta = 0° **Indice 1** = posizione preventilazione = 0° **Indice 2** = posizione postventilazione = 15°	No-flame position fuel actuator **Index 0** = no-load position = 0° **Index 1** = prepurge position = 0° **Index 2** = postpurge position = 15°	OEM / Service	x	x	x
502	Posizione **servocomando aria** in assenza di fiamma (no-flame) **Indice 0** = posizione di sosta = 0° **Indice 1** = posizione preventilazione = 90° **Indice 2** = posizione postventilazione = 45°	No-flame position air actuator **Index 0** = no-load position = 0° **Index 1** = prepurge position = 90° **Index 2** = postpurge position = 45°	OEM / Service	x	x	x
503	**% giri motore con inverter** 0% = ventilatore fermo, 100% = ventilatore al massimo della velocità **Indice 0** = posizione di sosta = 0% **Indice 1** = posizione preventilazione = 100% **Indice 2** = posizione postventilazione = 50%	No-flame speeds VSD Index 0 = no-load speed = 0% Index 1 = prepurge speed = 100% Index 2 = postpurge speed = 50%	OEM / Service		x	x
504	Combustibile 1 - Posizione **servocomando combustibile** in assenza di fiamma (no-flame) **Indice 0** = posizione di sosta = 0° **Indice 1** = posizione preventilazione = 0° **Indice 2** = posizione postventilazione = 15°	Fuel 1 No-flame position fuel actuator **Index 0** = no-load position = 0° **Index 1** = prepurge position = 0° **Index 2** = postpurge position = 15°	OEM / Service		x	
505	Combustibile 1 - Posizione **servocomando aria** in assenza di fiamma (no-flame) **Indice 0** = posizione di sosta = 0° **Indice 1** = posizione preventilazione = 90° **Indice 2** = posizione postventilazione = 45°	Fuel 1 No-flame position air actuator **Index 0** = no-load position = 0° **Index 1** = prepurge position = 90° **Index 2** = postpurge position = 45°	OEM / Service		x	
506	Combustibile 1 - **% giri motore con inverter** 0% = ventilatore fermo, 100% = ventilatore al massimo della velocità **Indice 0** = posizione di sosta = 0% **Indice 1** = posizione preventilazione = 100% **Indice 2** = posizione postventilazione = 50%	Fuel 1 No-flame speeds VSD Index 0 = no-load speed = 0% Index 1 = prepurge speed = 100% Index 2 = postpurge speed = 50%	OEM / Service		x	
522	Tempo rampa di salita inverter	Ramp up	OEM / Service		x	x
523	Tempo rampa di discesa inverter	Ramp down	OEM / Service		x	x

542	Activation of VSD / PWM fan (PWM = Pulse-Width Modulation) 0=deactived 1=actived	Activation of VSD / PWM fan (PWM = Pulse-Width Modulation)	OEM / Service		x	x

			Parameter 544						
			Modulation **32s**	Modulation **48s**	Modulation **64s**	Modulation **80s**			
544	Actuator	Actuating speed parameter 613	Max. delta between the curve points				OEM / Service	x	x	x
	Actuator (<= 5Nm)	5s / 90°	31°	46°	62°	77°				
	Actuator **SQM33.7**	17s / 90°	**9° (1)**	13°	18°	22°				

(1) in this case the max. position of 90° can't be reached

545	Percentuale minima di carico per modulazione (valore fabbrica = n.d. - range impostazione:20%-100%)	Lower load limit (default value = n.d. - range:20%-100%)	OEM / Service	x	x	x
546	Percentuale massima di carico per modulazione (valore fabbrica = n.d. - range impostazione:20%-100%)	Higher load limite (default value = n.d. - range:20%-100%)	OEM / Service	x	x	x
565	Combustibile 1 - Percentuale minima di carico per modulazione (valore fabbrica = n.d. - range impostazione:20%-100%)	Fuel 1 Lower load limit (default value = n.d. - range:20%-100%)	OEM / Service		x	
566	Combustibile 1 - Percentuale massima di carico per modulazione (valore fabbrica = n.d. - range impostazione:20%-100%)	Fuel 1 Higher load limite (default value = n.d. - range:20%-100%)	OEM / Service		x	

Block 600: Actuators

Param.	Descrizione	Description	Password	LMV20 LMV27	LMV26	LMV37
601	Impostazione punto di riferimento **Indice 0** = combustibile **Indice 1** = aria **0** = chiuso (<0°) **1** = aperto (>90°)	Selection of reference point **Index 0** = fuel **Index 1** = air **0** = closed (<0°) **1** = open (>90°)	OEM	x	x	x
602	Direzione rotazione del servocomando **Indice 0** = combustibile **Indice 1** = aria **0** = antiorario **1** = orario VEDI MESSAGGIO DI “ATTENZIONE” RIPORTATO SOTTO.	Actuator’s direction of rotation **Index 0** = fuel **Index 1** = air **0** = counterclockwise **1** = clockwise SEE “WARNING” MESSAGE QUOTED BELOW.	OEM	x	x	x
606	Limite tolleranza per monitoraggio posizione (0.1°) **Indice 0** = combustibile **Indice 1** = aria	Tolerance limit of position monitoring (0.1°) **Index 0** = fuel **Index 1** = air	OEM / Service	x	x	x
608	Combustibile 1 - Impostazione punto di riferimento **Indice 0** = combustibile **Indice 1** = aria **0** = chiuso (<0°) **1** = aperto (>90°)	Fuel 1 : Selection of reference point **Index 0** = fuel **Index 1** = air **0** = closed (<0°) **1** = open (>90°)	OEM		x	
609	Combustibile 1 - Direzione rotazione del servocomando **Indice 0** = combustibile **Indice 1** = aria **0** = antiorario **1** = orario VEDI MESSAGGIO DI “ATTENZIONE” RIPORTATO SOTTO.	Fuel 1 : Actuator’s direction of rotation **Index 0** = fuel **Index 1** = air **0** = counterclockwise **1** = clockwise SEE “WARNING” MESSAGE QUOTED BELOW.	OEM		x	
610	Combustibile 1 - Limite tolleranza per monitoraggio posizione (0.1°) **Indice 0** = combustibile **Indice 1** = aria	Fuel 1 : Tolerance limit of position monitoring (0.1°) **Index 0** = fuel **Index 1** = air	OEM / Service		x	

611	Tipo di riferimento dei servocomandi index 0 = fuel (default = 0 (riferimento standard) index 1 = air (default = 0 (riferimento standard) 0 = standard 1 = fermo entro il raggio utile 2 = fermi interni (SQN1...) 3 = entrambi	Type of referencing Index 0 = fuel Index 1 = air 0 = standard 1 = stop within usable range 2 = internal stop (SQN1...) 3 = both	OEM	x	x	x
612	Combustibile 1 - Tipo di riferimento del servocomando combustibile 0 = standard 1 = fermo entro il raggio utile 2 = fermi interni (SQN1...) 3 = entrambi	Fuel 1: Type of reference for fuel actuator 0 = standard 1 = range stop in the usable range 2 = internal range stop (SQN1…) 3 = both	OEM		x	
613	Tipo di servocomando **Indice 0** = combustibile **Indice 1** = aria 0 = 5s / 90° (1Nm, 1,2Nm, 3Nm) 1 = 10s / 90° (6Nm) 2 = 17s / 90° (10Nm)	Type of actuator **Index 0** = fuel **Index 1** = air 0 = 5 s / 90° (1Nm, 1,2Nm, 3Nm) 1 = 10 s / 90° (6Nm) 2 = 17 s / 90° (10Nm)	OEM	x	x	x
614	Combustibile 1 :Tipo di servocomando **Indice 0** = combustibile **Indice 1** = aria 0 = 5s / 90° (1Nm, 1,2Nm, 3Nm) 1 = 10s / 90° (6Nm) 2 = 17s / 90° (10Nm)	Fuel 1 : Type of actuator **Index 0** = fuel **Index 1** = air 0 = 5 s / 90° (1Nm, 1,2Nm, 3Nm) 1 = 10 s / 90° (6Nm) 2 = 17 s / 90° (10Nm)	OEM		x	
641	Attivazione procedura di standardizzazione inverter (riferirsi al codice errore 82) 0 = standardizzazione disattivata 1 = standardizzaione attivata	Control of speed standardization of VSD Error diagnostics of negative values (refer to error code 82)0 = no speed standardization 1 = speed standardization active			x	x

645	Configurazione uscita analogica % di carico (valore fabbrica = 0) **0** = DC 0..10 V **1** = DC 2..10 V **2** = DC 0/2..10 V	Configuration of analog output (default value = 0) **0** = DC 0..10 V **1** = DC 2..10 V **2** = DC 0/2..10 V	OEM / Service	**LMV27**	x	x

⚠	**ATTENTION:** as for SQM3x actuators, set the direction according to the acutator function. As far as SQN1x actuators, set **always** the counterclockwise direction, independently from the model chosen for the specific function.

Block 700: Error history

Param.	Descrizione	Description	Password
701	Storico errori: 701 - 725.01.codice	Error history: 701 - 725.01.code	Service / Info
°	Storico errori: 701 - 725.02.codice diagnostico	Error history: 701 - 725.02.diagnostic code	Service / Info
°	Storico errori: 701 - 725.03.classe errore	Error history: 701 - 725.03.error class	Service / Info
°	Storico errori: 701 - 725.04.fase	Error history: 701 - 725.04.phase	Service / Info
°	Storico errori: 701 - 725.05.contatore avvii	Error history: 701 - 725.05.startup counter	Service / Info
725	Storico errori: 701 - 725.06.carico	Error history: 701 - 725.06.load	Service / Info

Block 900: Process data

Param.	Descrizione	Description	Password
903	Potenza attuale (valore fabbrica = 0% - range impostazione = 0-100%) **Indice 0** = combustibile **Indice 1** = aria	Current output (default value = 0% - range = 0-100%) **Index 0** = fuel **Index 1** = air	Service / Info
922	Posizione incrementale servocomandi (valore fabbrica = 0% - range impostazione = -50% - 150%) **Indice 0** = combustibile **Indice 1** = aria	Incremental position of actuators (default value = 0% - range = -50% - 150%) **Index 0** = fuel **Index 1** = air	Service / Info
935	Giri motore assoluti	Absolute speed	OEM / Service
936	Giri motore in fase standardizzazione	Standardized speed	Service / Info
942	Sorgente potenza attiva	Active load source	OEM / Service
945	Solo con **LMV26:** Combustibile attuale 0 = combustibile 0 1 = combustibile 1	Actual fuel 0 = fuel 0 1 = fuel 1	Service / Info
947	Risultato interrogazione contatti (codifica bit)	Result of contact sensing (bit-coded)	Service / Info
950	Stato relè (codifica bit)	Required relay state (bit-coded)	Service / Info
954	Intensità di fiamma (0% ÷ 100%); minima corrente 30% = 4µA; massima corrente100% = 16µA; massima corrente ammissibile = 40µA.	Intensity of flame (range = 0% - 100%) minimum current 30% = 4µA; maximum current100% = 16µA; maximum current possible = 40µA.	Service / Info
961	Stato moduli esterni e display	Status of external modules and display	Service / Info
981	Errore memoria: codice	Error memory: code	Service / Info
982	Errore memoria: codice diagnostica	Error memory: diagnostic code	Service / Info
992	Flag di errore	Error Flags	OEM / Service

Actuators references

An incremental transducer is used to ensure position feedback. Referencing of the actuators must be performed after power-on. In addition, at the end of each shutdown in phase 10, the actuators are referenced to ensure that individual stepping errors, which could lead to shutdown, do not accumulate. If a position error occurs, the system switches to the safety phase (phase 01), enabling the actuators with detected position errors to be referenced. During the following phase 10, the only actuators that are referenced are those that were not referenced before in the safety phase (phase 01). The position of the reference point can be selected depending on the type of burner design, either the CLOSED position (<0°) or the OPEN position (>90°).

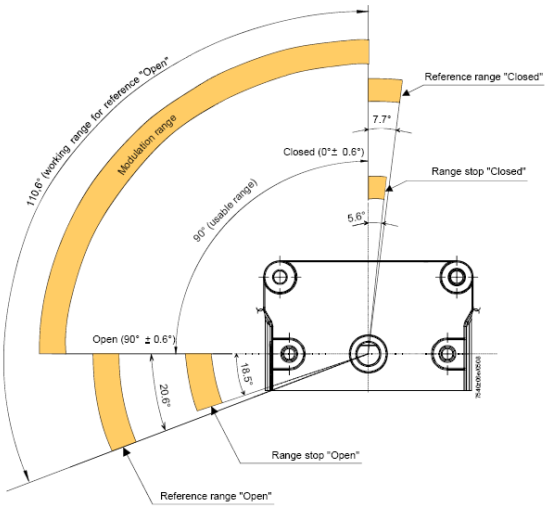

Param.	Descrizione	Description	Password
601	Impostazione punto di riferimento **Indice 0** = combustibile **Indice 1** = aria **0** = chiuso (<0°) **1** = aperto (>90°)	Selection of reference point **Index 0** = fuel **Index 1** = air **0** = closed (<0°) **1** = open (>90°)	OEM

If the acutators position is exchanged (error code: 85), the burner will lockout and will try to adjust for three times, then it will lock out.

Gas proving system

Valve proving is only active when firing on gas. This is a leakage test designed to detect leaking gas valves and, if necessary, to prevent the valves from opening or ignition from being switched on. Lockout is initiated. When performing valve proving, the gas valve on the burner side is opened first to bring the test space to atmospheric pressure. Then, the valve is closed whereupon the pressure in the test space must not exceed a certain level, measured by the gas leakage pressure switch (PGCP). Then, the gas valve on the mains side is opened to fill the gas pipe. When the valve is closed again, the gas pressure must not drop below a certain level. Valve proving can be parameterized to take place on startup, shutdown, or on both phases.

Air-fuel curve points

There are 10 air-fuel curve points: T

P0 = ignition position. Only for ignition; after the ignition, the burner works between Point P1 (low flame) and point P9 (high flame) without going back to P0.

P0 can be set everywhere irrespective of all the other points.

COMMISSIONING THE BURNER

The LMV2x complete programming must be performed on units that has never been set before or reset units (e.g. spare parts).
The programming procedure is performed by setting the following main parameters:

1 if LMV.. is a spare part, insert burner ID (parameter **113**) at least 4 digit.
2 type of fuel train (parameter "**201**")
3 air/fuel ratio curvepoints (Block "**400**")
4 maximum load percentage (parameter "**546**")
5 minimum load percentage (parameter "**545**")

⚠	CAUTION: if an error message as "Loc.." appears when the unit is turned to on for the first time, press ENTER (InFo) until the "Reset" message apperas. After few seconds, the message "OffUpr" will be displayed.

This message shows that the unit has not been programmed before or that the operating mode (fuel train) is not set yet or that the unit has not been completely programmed. Pree keys **F** (Fuel) and **A** (Air) at the same time unitl the display shows **code** and next it will show 7 bars the first on the left is flashing. If the display shows "Off", it means that the unitis already set, then see the instructions on chapter "Adjsuting the burner with LMV2x already programmed").

At the first LMV startup, the AZL display will show

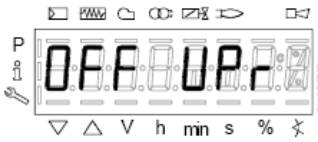

It means that the unit was never set or that no mode was chisen or that some parameters have to be set furthert.
Push F (fuel) and A (Air) together untilthe display shows **code** and then a 7 digit dashed line blinking on the left.

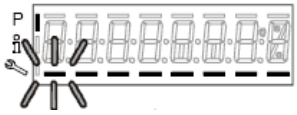

Press the "**+**" key until the first character of the password (the default password is 9876), then press **ENTER (InFo)**, the character now turn to a bar while the second bar starts flashing. Press "**+**" until the second character is entered, then press **ENTER (InFo)**.
Repeat the procedure until the last character si set, then press **ENTER (InFo)**, then **ENTER** again until the message **PArA** appears: then the first parameters block ("**400**") will be shown:

Press **ENTER (InFo)** again, to gain access to programming the operating mode (fuel train):

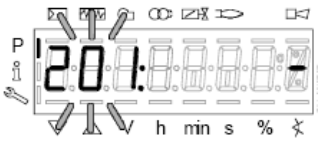

In the example, set configuration **1** = direct gas ignition (G mod).
Other possibilities are below listed:

the types of fuel trains are the following:

Param.	Descrizione	Description	Password
201	Modalità funzionamento bruciatore (rampa comb., mod. / multistadio, servocom., ecc.) __= non definito (cancellazione curve)___= **1** = accensione diretta a gas (G mod) **2** = accensione tramite pilota gas con attacco tra le due elettrovalvole EV1/EV2 gas (Gp1 mod) **3** = accens. tramite pilota gas con attacco a monte dell'elettrov. EV1 del gas (Gp2 mod) **4** = accensione a gasolio - modul. (Lo mod) **5** = accens. a gasolio - bistadio (Lo 2 stage) **6** = accens. a gasolio - tristadio (Lo 3 stage)	Burner operating mode (fuel train, mod / multi-stage, actuators, etc.) __= undefined (delete curves) **1** = gas direct ignition(G mod) **2** = gas pilot ignition with connection between the two gas solenodi valves EV1/EV2 (Gp1 mod) **3** = gas pilot ignition with connection upstrem the gas solenoid valve EV1 (Gp2 mod) **4** = Light Oil - modulating (Lo mod) **5** = Light Oil - 2stages (Lo 2 stage) **6** = Light Oil - 3stages (Lo 3 stage)	OEM / Service

G mod

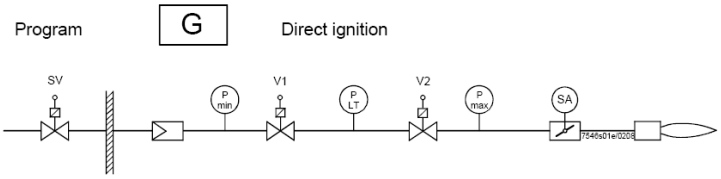

Gp1 mod

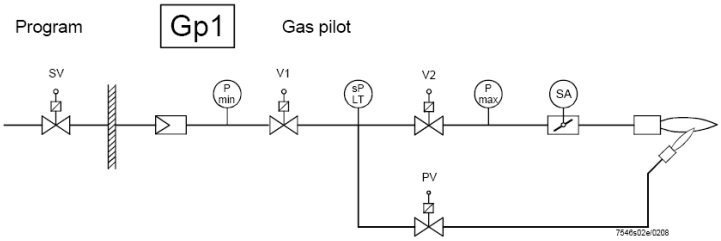

Gp2 mod

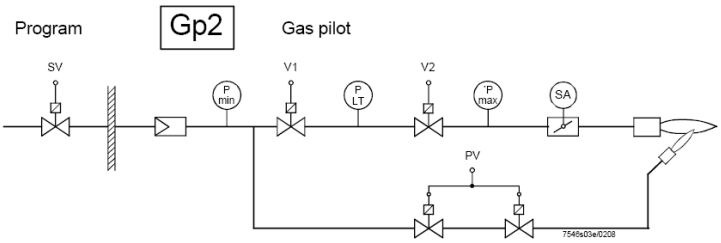

Lo mod

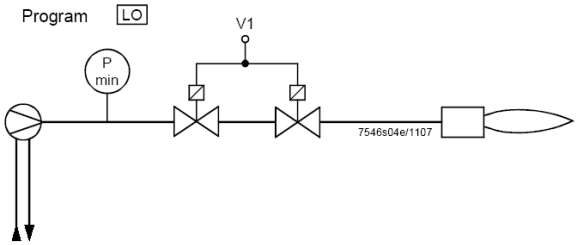

Lo 2-stage

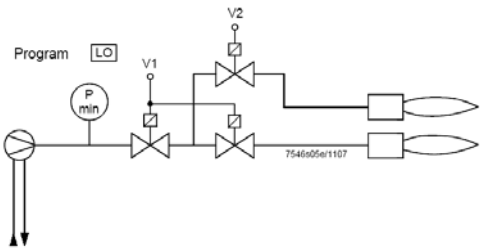

Lo 3-stage

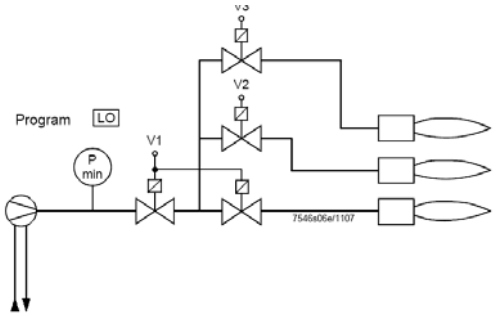

In the example the Gmod gas train has been set (Configuration “1”).
Choose the fuel train by pressing ENTER, then press “**+**” / “**-**”. Press ENTER to confirm: number “1” will appear on the right side of the display.

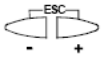

Then press ESC

to quit. The following display is:

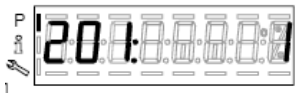

Press “**+**” to show the first point to be set P0.

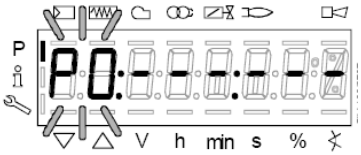

Press **F** and **“+”** to increase the opening angle of the fuel actuator “**0F”** until the requested value is reached (for example 12°÷15°, see below) for the ignition point; or press **F** and **“-”** to decrease the angle:

To set the air damper opening angle “0A” in the ignition point (10° for example - see below), press “A” and “+” “A” and “-” at the same time:

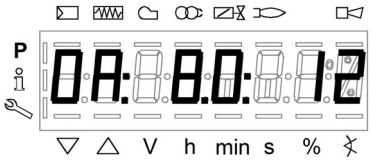

LMV37:
Now the air and fuel quantities are set at the ignition point P0:
By pressing “+”, point P9 can be programmed to set the air and fuel values at the maximum output

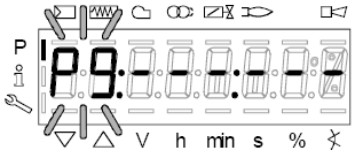

go on as described above to the the opening angles of the air actuator (A) and fuel actuator (F):

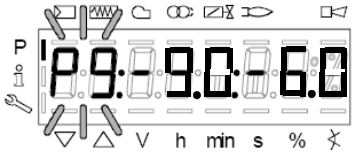

⚠	**CAUTION:** at the first burner adjustment, it is recommended to set the maximum output P9 at the same value (or little higher) of the ignition point, in order to safely reach point P9 next (see next paragraph).

By pressing “+” the display will show:

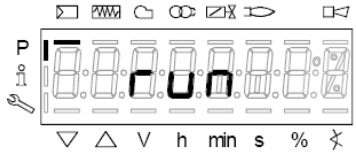

The burner is ready to startup. Now it is possible to re-set the curve points while the burner is operating (“warm setting”) by pressing the ENTER (InFo) or while the burner is in stand-by mode (“cold setting”) by pressing ENTER .

Warm setting

1 Once pressed button **"enter"** and the chain thermostats open (X5-03 terminals), the LMV.. show Ph12.Then close the chain termostat and the unit performs the prepurge cycle (see "Phases List") and stops at the ignition point P0 without ignition anyway.

2 By pressing "+", the burners lights abd the air/fuel ratio can be properly set in presence of flame.

3 By pressing "+" again, the next point P1 is shown (eqaul to P0 as the unit automatically set P0=P1);

4 By pressing "+" again, the "Calc" message will be displayed: the unit is processing the sir/fuel ratio curvepoints until point P9, previuosly set. Once the processing is perfomed the calculated point P2 is shown.By pressing "+" again, the "Calc" message will be displayed: the unit is processing the sir/fuel ratio curvepoints until point P9, previuosly set. Once the processing is perfomed the calculated point P2 is shown.

5 By pressing "+", it is possible to go through the processed curve until point P9 is reached.

Note: if the point doesn't blink, servomotors are still running.

6 n order to set P9 with the gas flow rate according to the generator needs, follow this procedure:

Note: the purpose is to fully open the gas throttle and later on to adjust the gas flow rate through the gas pressure governor.

- Operate smoothly opening by just a few degrees the air damper and later on increasing the gas throttle opening it by a few degrees. Keep monitoring the flue through the flue analyser. Keep the air excess inside normal figures (from 3% to 7% residual O2) operating by means for the air damper servomotor;
- Keep increasing the air damper opening and then the gas throttle, as done in the sequence above, remebering to get the full firing rate wih the gas throttle fully open (or the oil pressure regulator at its maximum pressure position).

See example below:

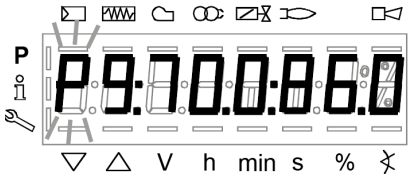

- If, while opening the gas throttle, the gas flow rate was too high, reduce it only through the gas governor and keep opening the throttle until the 60÷70° position is got.
- If the gas train is equipped with a governor and a valve with an adjustable gas flow rate, fully open also this last valve, smoothly! The gas flow rate is always set by means of the governor.

7 As soon as all the devices are fully open, set the gas flow rate through the governor.

8 Set the air damper position in order to get the reccomended air excess (3÷4.8% O2 on gas and 2.9÷4.9 % on oil).

Note1: on high flame, if the gas flow rate is changed by means of the governor, all the other points below high flame must be checked again.

9 After having set the high flame point P9, keep "-" pressed for some seconds unitl "Calc" is displayed in order to have the LMV recalculating all the points:

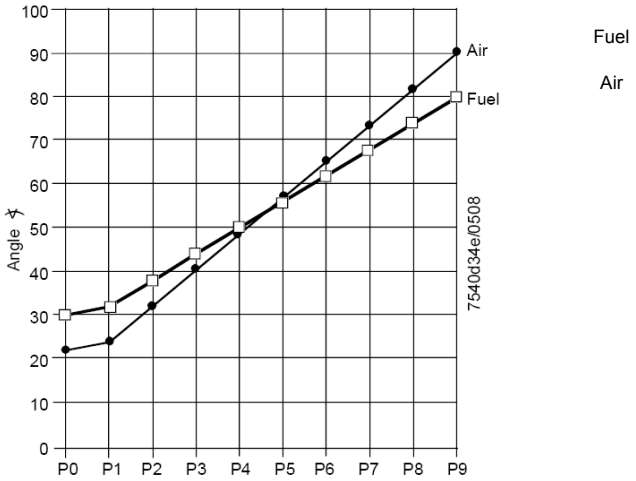

10 the unit will automatically reach point P8 processed: check the combustion values in this point and, if necessary, change it.

11 Press "-" to go down to the lower points and check the combustion values, change the points if necessary.

Note: if in an intermediate point (for example P5), the change of the actuators position is important according to the processed point

P5, keep pressing “-” unitl “Calc” is displayed. The curve will be processed again downwards point P1.

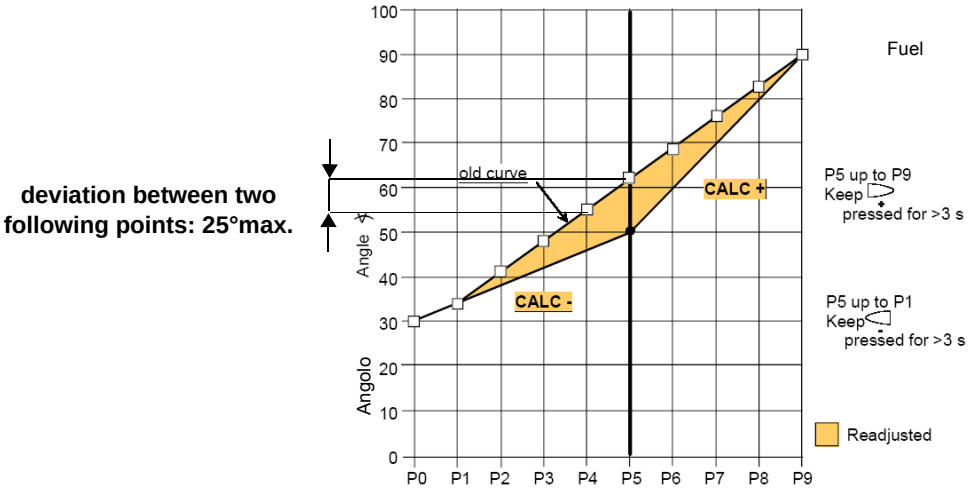

12 press “-” to go through the lower points and check the combustion values, if necessary change the points as described above.

13 By pressing ESC, at the end of the points adjusments, the parameter “**546”** (setting the maximum load) will be displayed; press ENTER (InFo), then “+” until 100%, then press ENTER (InFo) again, ESC and then “+”.

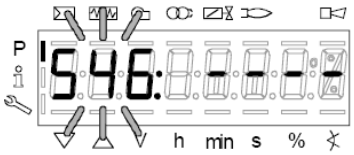

14 The parameter “**545”** (setting the minimum load) is displayed: press ENTER (InFo), then “+” until 20%. Press ENTER, then press ESC for three times. The message “oP” will be displayed as well as the load percentage at the burner is working on.

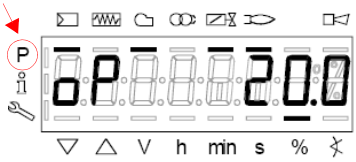

he hyphen related to the symbol “P” (highlited in the picture) will be off to show that the unit exited the programmig mode. The burner will then work automatically, following the curve set.

.**Note1:** if the curvepoints settings is quit before end (by pressing ESC or for a faulty shutdown), the message “OFF UPr” (Start prevention) will be diplayed until all the curvepoints will be set.

Note2: if the gas flow rate at high flame point (maximum load) is changed by means of the pressure stabiliser, all the curvepoints must be checked by going through the curve downwards and resetting them if necessary.

Note3: if the point does not flash, it means thet the actuators have not reached the set position yet.

Note4: if an error occurs causing a safety shutdwon during the processing of the curve, the processing itself will be interrupted.

Cold setting

The ”cold setting“ (without flame) can be performed only when all the curve points values are known (for instance, in case of replacement).

⚠	**When the burner is off, if you modify one curve set point, when the burner restarts the AZL2x shows OFF UPr (OFF UPr0 or OFF UPr1 for LMV26). The LMV.. then, requires a new "warm" startup (see procedure paragraph "Warm Setting”) by checking again all points of curve from P0 to P9.**

BURNER STARTUP WITH LMV2x ALREADY PROGRAMMED

Once the LMV turns on, the AZL display will show

The burners is basically factory set. The air/fuel ratio curve is set with the maximum output point P9 a little higher or equal to P0. To adjust the burner on the plant site, adjust the maximum output point to the flow rate values really requested. Then go through the curve-points, by pressing “+” several times to reach point P9: then adjust the air actuator position (for the air damper) and the fuel acttuator (for the butterfly valve, in case of gas or the oil pressure governor incase of oil), by adjusting the fuel flow rate by means of the gas pressure stabiliser (for gas) or the oil pressure governor (for oil), checking the combustion valeus contemporarly. Once the burner is adjusted at the maximum output, press “-” for more than 5 seconds to process the curve downwards. The curve is then a straight line: go on checking the combustion values point by point; change them if necessary and in case linearise the curve again.

Before starting the burner up, press **F** and **A** at the same time

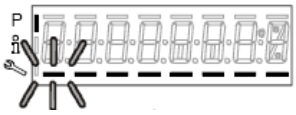

enter the password following the procedure on chapter “Programming LMV2x”.

Press ENTER until the display will show:

Press ENTER again: it will show

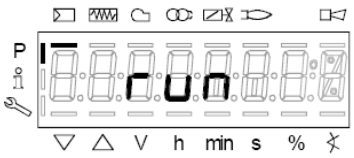

press ENTER (InFo)

: the display will show phase 12.

Ph12: *Standby* phase (stationary)

Ph12: *Standby* phase (stationary)

By closing the thermostatic series, the burner startup cycle will take place:

Ph22: *Fan ramp up* phase (fan motor = ON, safety shutoff valve = ON)

Ph24: *Traveling to prepurge position* phase

Ph30: *Prepurge* phase

Ph36: *Traveling to ignition position* phase

Ph38: *Preignition* phase

Ph40: *1st safety time* phase (ignition transformer ON)

Ph42: *1st safety time* phase (ignition transformer OFF), preignition time OFF

Ph44: *Interval1*

The startup sequence stops at phase 44.

The burners is lit and is in“P1” position (low flame point):

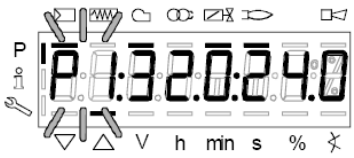

Set the air/fuel ratio curvepoints as described on chapter “Programming the LMV2x”

Note: the other phases are
Ph60 = operation (OP= in modulation)
Ph62 = travelling to shutdown
Ph70 = off but in prepurge after the burntime
Ph72 = travelling to postpurging
Ph74 = postpurge (countdown is displayed)

Press ESC the parameter “**546**” (Setting the maximum load) is displayed

Then press to exit the programming mode.
The display will show:

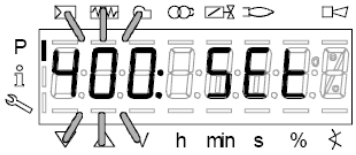

Press for a second time: the display will show the load percentage the burner is working at.

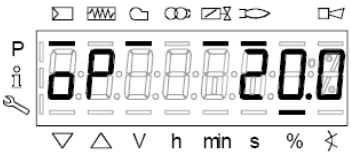

When the generator reaches the programmed set-point, the burner will be in stand-by: the display will show

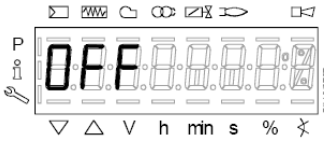

Reset / manual lockout

The system can be manually locked by simultaneously pressing the **ENTER (InFo)** button and **any other button** on the AZL2.... This function allows the user to stop the system from the operating level should an emergency occur. When making a reset, the following actions are carried out:

- Alarm relay and the fault display are off
- the lockout position is cancelled
- the unit performs a reset, then it switches to stand-by

If the unit is in the lockout position, a reset can be made by pressing the **InFo** button for 1…3 seconds. The function is available only when the unit is in the lockout position. Longer or shorter pushes on the button do not produce a reset so that the system maintains the lockout position.

Codice errore / Error code	Codice diagnostico / Diagnostic code	Descrizione / Meaning
167	2	/ Manual lockout via AZL2…

Timeout for menu operation

The time for automatically leaving the parameter setting level can be adjusted between 10 and 120 minutes, using the parameter 127 (Timeout for menu operation). If, during that period of time, there is no operation via the AZL2..., the parameter setting level is quit and the password level reset to *Info / Service*.

Caution! In addition, this timeout or interruption of communication between the LMV2.. and the AZL2... during the time the curves are set leads to lockout!

Codice erroreC Error code	Codice diagnostico Diagnostic code	DescrizioneMeaning
167	8	Manual locking

Entering the Parameter levels

By means of a proper use of the keys, it is possible to enter the various level parameters, as shown in the following flow chart:

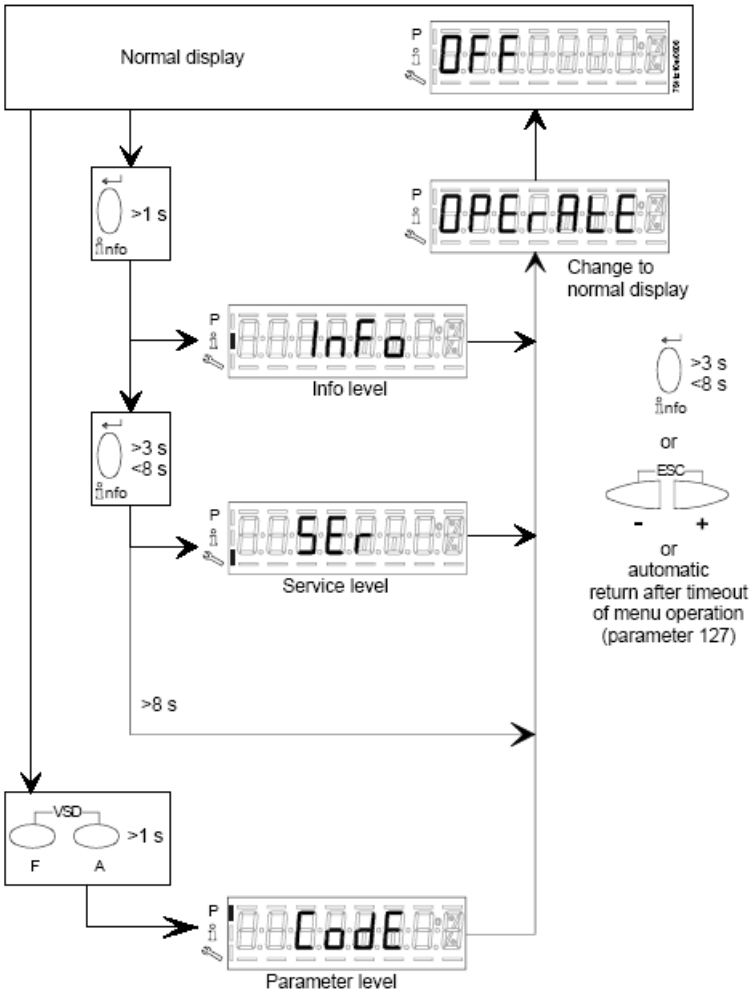

The burner and consequently the LMV2x.. are factory set; the air and fuel curves as set as well.

Info level

To enter the **Info** level, proceed as follows:

1 in any menu position, press keys **+** and **-** at the same time, then the program will start again: the display will show **OFF**.

2 , until the display will show **InFo**, Press the **enter (InFo)** key

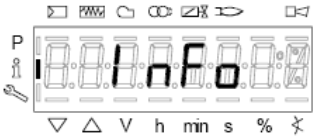

3 then il will show the first code (167) flashing, on the right side it will show the data entered. By pressing **+** or **-** it is possible to scroll (up or down) the parameter list.

4 If a dot-line is shown on the right, there is no enough room for complete visualisation: press **enter** again the data will be completely shown for 1 to 3 seconds. By pressing **enter** or **+** and**-** at the same time, the system will exit the parameter visualisation and go back to the flashing number.The **Info** level shows some basic parameters as:

Parameter	***Description***
167	Cubic meters of fule (resettable)
162	Operating hours (resettable)
163	Device operating hours
164	Burners start-ups (resettable)
166	Total number of start-ups
113	Burner number (i.e. serial number)
107	Software version
102	Software date
103	Device serial number
104	Customer code
105	Version
143	Free

5 Example: choose parameter 102 to show the date

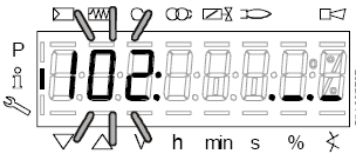

the display shows parameter **102** flashing on the left and characters **._._** on the right.

6 press InFo for 1-3 seconds: the date will appear

7 press InFo to go back to parameter “102”

8 by pressing + / -, it is possible to scroll up/down the parameter list (see table above), or, by pressing ESC or InFo for more seconds, the display will show

9 Once the last parameter is accessed (143) by pressing **+** , the **End** message will flash.

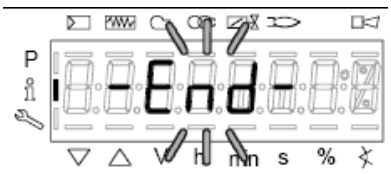

10 Press **InFo** for more than three seconds or for more than three seconds orto return to the normal display.

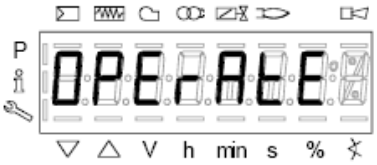

If a message like the one below is shown during operation,

it means that the burner is locked out and the Errore code is shown (in the example “error code:4”); this message is alternating with another message

Diagnostic code (in the example “diagnostic code:3”). Record the codes and find out the fault in the Error table
To perform the reset, press InFo for one second:

The unit displays an event which does not lead to shutdown.
The display shows current error code **c:** alternating with diagnostic code **d**:

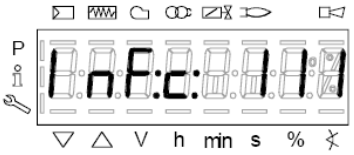

.
Press **InFo** to return to the display of phases.
Example: Error code **111** / diagnostic code 0

To reset, press InFo for a second. Record the codes and check the Error List to find the type of faults.

Service level

To enter the Service mode, press InFo until the display will show:

The service level shows all the information about flame intensity, actuators position, number and lock codes:

Parameter	*Description*
954	Flame intensity
121	% output, if set = automatic operation
922	Actuators position, 00=combustibile; 01= aria
161	Lock-outs number
701..725	Lock-outs History (see chapter 23 in the LMV2x manual)

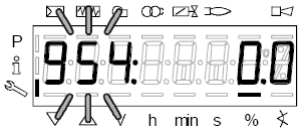

1 the first parameter will be “954”: the percentage of flame is shown on the right. By pressinf + or - it is possible to scroll up/down the parameter list.

2 Once the last parameter is accessed (143) by pressing **+** , the **End** message will blink.

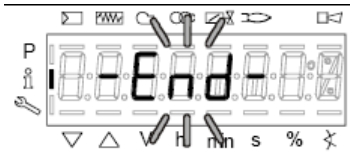

3 Press **InFo** for more than three seconds or for more than three seconds orto return to the normal display.

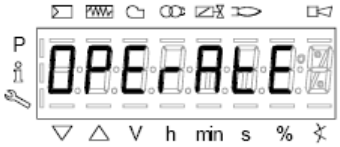

PHASES LIST

Fase /Phase	Funzione	Function
Ph00	Fase blocco	Lockout phase
Ph01	Fase di sicurezza	Safety phase
Ph10	t10 = tempo raggiungimento posizione riposo	t10 = home run
Ph12	Pausa	Standby (stationary)
Ph22	t22 = tempo di salita ventilatore (motore ventilatore = ON, valvola intercettazione di sicurezza = ON)	t22 = fan ramp up time (fan motor = ON, safety shutoff valve = ON)
Ph24	Verso posizione preventilazione	Traveling to the prepurge position
Ph30	t1 = tempo preventilazione	t1 = prepurge time
Ph36	Verso posizione accensione	Traveling to the ignition position
Ph38	t3 = tempo preaccensione	t3 = preignition time
Ph40	TSA1 = primo tempo sicurezza (trasformatore accensione ON)	TSA1= 1st safety time (ignition transformer ON)
Ph42	TSA1 = primo tempo sicurezza (trasformatore accensione OFF)	TSA1 = 1st safety time (ignition transformer OFF), t42 = preignition time OFF
Ph44	t44 = intervallo 1	t44 = interval 1
Ph50	TSA2 = secondo tempo sicurezza	TSA2 = 2nd safety time
Ph52	t52 = intervallo 2	t52 = interval 2
Ph60	Funzionamento 1 (stazionario)	Operation 1 (stationary)
Ph62	t62 = massimo tempo bassa fiamma (funzionamento 2, in preparazione per spegnimento, verso bassa fiamma)	t62 = max. time low-fire (operation 2, preparing for shutdown, traveling to low-fire)
Ph70	t13 = tempo postcombustione	t13 = afterburn time
Ph72	Verso posizione postcombustione	Traveling to the postpurge position
Ph74	t8 = tempo postventilazione	t8 = postpurge time
Ph80	t80 = tempo evacuazione controllo tenuta valvole	t80 = valve proving test evacuation time
Ph81	t81 = tempo perdita pressione atmosferica, prova atmosferica	t81 = leakage time test time atmospheric pressure, atmospheric test
Ph82	t82 = test perdita, test riempimento	t82 = leakage test filling test, filling
Ph83	t83 = tempo perdita pressione gas, test pressione	t83 = leakage test time gas pressure, pressure test
Ph90	Tempo attesa “mancanza gas”	Gas shortage waiting time

BACKUP PARAMETER WITH AZL2x

On the AZL2x you can save the configuration to download on another appliance LMV.

To do this:

access up, press **F** and **A** at the same time

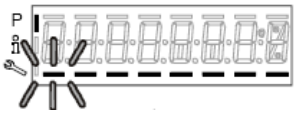

enter the password following the procedure on chapter “Programming LMV2x”.

Press ENTER until the display will show:

with the button go to the group **000** of the parameters and press ;with the buttons **+** and **-** go to **050** parameter

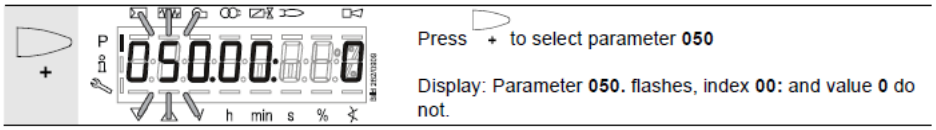

press the disply show

press again with the button **+** select **1** and start the backup process by pressing .

After about 5 seconds the backup process ends and the display shows 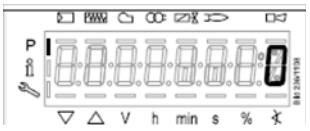

.

⚠	**It is recommended that you perform a backup procedure whenever you change the parameters of the LMV for having a copy in AZL2x**!

RESTORE PARAMETER FROM AZL2x TO LMV..

To copy the previously saved configuration on AZL2x proceed as follows:
access up, press **F** and **A** at the same time

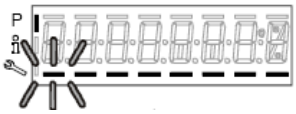

enter the password following the procedure on chapter “Programming LMV2x”.
Press ENTER until the display will show:

⚠	**To copy the configuration from AZL2x to LMV. It is important that the type of LMV is the same (for example LMV20 with LMV20, etc.) and that 113 "Burner ID" of the burner is the same value that is saved in the configuration you want to copy.**

With the buttons 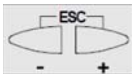 go to the group **100** of the parameters, press на 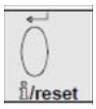 and always with the buttons **+** and **-** go to **113** parameter "Burner ID", press and verify (and/or change with buttons by pressing enter to confirm)

iWith the buttons 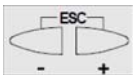 go to the group **000** of the parameters, press end select the **050** parameter

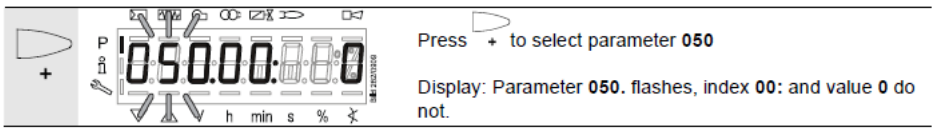

press the disply show

with the button 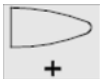 the display shows

press again with the button **+** select **1** and start the restore process by pressing .

After about 5 seconds the restore process ends and the display shows 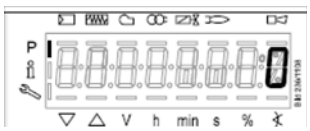 .
Now, LMV has the same configuration that was stored on AZL2x.

ERROR CODE TABLE

Error code	Diagnostic code	Meaning for the LMV2x/3x... system	Remedy
no Comm		**No communication between LMV26... basic unit and AZL2...**	Check wiring for line interruption/loose contact
2	**#**	**No flame at the end of safety time (TSA)**	
	1	*No flame at the end of safety time 1 (TSA1)*	
	2	*No flame at the end of safety time 2 (TSA2)*	
3	**#**	Air pressure failure	
	0	*Air pressure off*	
	1	*Air pressure on*	
	4	*Air pressure on – prevention of startup*	
	20	*Air pressure, combustion pressure – start prevention*	
	68	*Air pressure, POC – start prevention*	
	84	*Air pressure, combustion pressure, POC – start prevention*	
4	**#**	**Extraneous light**	
	0	*Extraneous light during startup*	
	1	*Extraneous light during shutdown*	
	2	*Extraneous light during startup – prevention of startup*	
	6	*Extraneous light during startup, air pressure – start prevention*	
	18	*Extraneous light during startup, combustion pressure – start prevention*	
	24	*Extraneous light during startup, air pressure, combustion pressure – start prevention*	
	66	*Extraneous light during startup, POC – start prevention*	
	70	*Extraneous light during startup, air pressure, POC – start prevention*	
	82	*Extraneous light during startup, combustion pressure, POC – start prevention*	
	86	*Extraneous light during startup, air pressure, combustion pressure, POC – start prevention*	
7	**#**	**Loss of flame**	
	0	*Loss of flame*	
	3...255	*Loss of flame due to TÜV test (loss-of-flame test)*	Diagnostics corresponds to the period of time from shutdown of fuel valves to the detection of loss of flame (resolution 0.2 s → Value 5 = 1 s)

Error code	Diagnostic code	Meaning for the LMV20... system	Remedy
12	**#**	**Valve proving**	
	0	*Fuel valve 1 (V1) leaking* *(fuel valve 2 with valve proving via X5-01)*	With valve proving via X5-01 (gas pressure switch-min) - Check if valve on the burner side is leaking - Check if pressure switch for valve proving is closed, if gas pressure exist - Check wiring for short-circuit
	1	*Fuel valve 2 (V2) leaking* *(fuel valve 1 with valve proving via X5-01)*	With valve proving via X5-01 (gas pressure switch-min) - Check if valve on the gas side is leaking - Check wiring for short-circuit
	2	*Valve proving not possible*	Valve proving activated, but pressure switch-min selected as input function for X9-04 (check parameters 238 and 241)
	3	*Valve proving not possible*	Valve proving activated, but no input assigned (check parameters 236 and 237)
	4	*Valve proving not possible*	Valve proving activated, but 2 inputs assigned (set parameter 237 to pressure switch-max or POC)
	5	*Valve proving not possible*	Valve proving activated, but 2 inputs assigned (check parameters 236 and 237)
	81	*V1 leaking*	Check to see if the valve on the gas side is leaking Check wiring to see if there is an open-circuit
	83	*V2 leaking*	Check to see if the valve on the burner side is leaking Check to see if the pressure switch for the leakage test is closed when gas pressure is present Check wiring for short-circuit
14	**#**	**POC**	
	0	*POC open*	Check to see if the valve's closing contact is closed
	1	*POC close*	Check wiring Check to see if the valve's closing contact opens when valve is controlled
	64	*POC open - start prevention*	Check wiring to see if there is a line interruption. Check to see if the valve's closing contact is closed
19	*80*	*Combustion pressure, POC – start prevention*	Check to see if pressure switch has closed with no combustion pressure present Check wiring for short-circuit
20	**#**	**Pressure switch-min (Pmin)**	
	0	*No minimum gas /oil pressure*	Check wiring for open-circuit
	1	*Gas shortage – start prevention*	Check wiring for open-circuit
21	**#**	**Pressure switch-max / POC**	
	0	*Pressure switch-max: Max. gas / oil pressure exceeded* *POC: POC open (software version ≤ V02.00)*	Check wiring to see if there is a line interruption. POC: Check to see if the valve's closing contact is closed.

Error code	Diagnostic code	Meaning for the LMV2x/3x... system	Remedy
22 OFF S	**#**	**Safety loop / burner flange**	
	0	*Safety loop / burner flange open*	
	1	*Safety loop / burner flange open - prevention of startup*	
	3	*Safety loop/burner flange, extraneous light – start prevention*	
	5	*Safety loop/burner flange, air pressure – start prevention*	
	17	*Safety loop/burner flange, combustion pressure – start prevention*	
	19	*Safety loop/burner flange, extraneous light, combustion pressure – start prevention*	
	21	*Safety loop/burner flange, air pressure, combustion pressure – start prevention*	
	23	*Safety loop/burner flange, extraneous light, air pressure, combustion pressure – start prevention*	
	65	*Safety loop/burner flange, POC – start prevention*	
	67	*Safety loop/burner flange, extraneous light, POC – start prevention*	
	69	*Safety loop/burner flange, air pressure, POC – start prevention*	
	71	*Safety loop/burner flange, extraneous light, air pressure, POC – start prevention*	
	81	*Safety loop/burner flange, combustion pressure, POC – start prevention*	
	83	*Safety loop/burner flange, extraneous light, combustion pressure, POC – start prevention*	
	85	*Safety loop/burner flange, air pressure, combustion pressure, POC – start prevention*	
	87	*Safety loop/burner flange, extraneous light, air pressure, combustion pressure, POC – start prevention*	
50	**#**	**Internal error**	Make a reset; if error occurs repeatedly, replace the unit
51	**#**	**Internal error**	Make a reset; if error occurs repeatedly, replace the unit
55	**#**	**Internal error**	Make a reset; if error occurs repeatedly, replace the unit
56	**#**	**Internal error**	Make a reset; if error occurs repeatedly, replace the unit
57	**#**	**Internal error**	Make a reset; if error occurs repeatedly, replace the unit

Error code	Diagnostic code	Meaning for the LMV2x/3x... system	Remedy
58	**#**	**Internal error**	Make a reset; if error occurs repeatedly, replace the unit
61 Fuel Chg	**#**	**Fuel changeover**	
Fuel Chg	*0*	*Fuel 0*	No error - change to Fuel 0
Fuel Chg	*1*	*Fuel 1*	No error - change to Fuel 1
62 Fuel Err	**#**	**Invalid fuel signals / fuel information**	
Fuel Err	*0*	*Invalid fuel selection (Fuel 0 + 1 = 0)*	Check wiring to see if there is an open-circuit Note Curves cannot be set.
Fuel Err	*1*	*Different fuel selection between the µCs*	Make a reset; if error occurs repeatedly, replace the unit
Fuel Err	*2*	*Different fuel signals between the µCs*	Make a reset; if error occurs repeatedly, replace the unit
Fuel Err	*3*	*Invalid fuel selection (Fuel 0 + 1 = 1)*	Check wiring for short-circuit Note Curves cannot be set. LMV26...: Optional press reset button >3 seconds.
65	**#**	**Internal error**	Make a reset; if error occurs repeatedly, replace the unit
66	**#**	**Internal error**	Make a reset; if error occurs repeatedly, replace the unit
67	**#**	**Internal error**	Make a reset; if error occurs repeatedly, replace the unit
70	**#**	**Internal error fuel-air ratio control: Position calculation modulating**	
	23	*Output invalid*	No valid output
	26	*Curvepoints undefined*	Adjust the curvepoints for all actuators
71	**#**	**Special position undefined**	
	0	*Home position*	Parameterize the home position for all actuators used
	1	*Prepurge position*	Parameterize the prepurge position for all actuators used
	2	*Postpurge position*	Parameterize the postpurge position for all actuators used
	3	*Ignition position*	Parameterize the ignition position for all actuators used
72	**#**	**Internal error fuel-air ratio control**	Make a reset; if error occurs repeatedly, replace the unit
73	**#**	**Internal error fuel-air ratio control: Position calculation multistep**	
	23	*Output invalid*	No valid output
	26	*Curvepoints undefined*	Adjust the curvepoints for all actuators

Error code	Diagnostic code	Meaning for the LMV2x/3x... system	Remedy
75	**#**	**Internal error fuel-air ratio control: Data clocking check**	
	1	*Current output different*	
	2	*Target output different*	
	4	*Target positions different*	
	16	*Different positions reached*	Can be caused by different standardized speeds (e.g. after restore of data set) when the VSD is activated → standardize again and check adjustment of the fuel-air ratio control system
76	**#**	**Internal error fuel-air ratio control**	Make a reset; if error occurs repeatedly, replace the unit
80	**#**	**Control range limitation of VSD**	Basic unit could not correct the difference in speed and reached a control range limit. 1. Basic unit is not standardized for this motor → repeat standardization. **Caution!** **Settings of fuel-air ratio control must be checked.** 2. Ramp time settings of the VSD are not shorter than those of the basic unit (parameters 522, 523). 3. Characteristic of the VSD is not linear. Configuration of the voltage input at the VSD must accord with that of the basic unit (parameter 645). 4. VSD does not follow quickly enough the changes of the basic unit. Check settings of the VSD (input filter, slippage compensation, hiding different speeds)
	1	*Control range limitation at the bottom*	VSD speed was too high
	2	*Control range limitation at the top*	VSD speed was too low
81	*1*	*Interrupt limitation speed input*	Too much electromagnetic interference on the sensor line → improve EMC

Error code	Diagnostic code	Meaning for the LMV2x/3x... system	Remedy
82	**#**	**Error during VSD's speed standardization**	
	1	*Timeout of standardization (VSD ramp down time too long)*	Timeout at the end of standardization during ramp down of the VSD → ramp time settings of the VSD are not shorter than those of the basic unit (parameter: 523)
	2	*Storage of standardized speed not successful*	Error during storage of the standardized speed → lock the basic unit, then reset it and repeat the standardization
	3	*Line interruption speed sensor*	Basic unit receives no pulses from the speed sensor: 1. Motor does not turn. 2. Speed sensor is not connected. 3. Speed sensor is not activated by the sensor disk (check distance)
	4	*Speed variation / VSD ramp up time too long / speed below minimum limit for standardization*	Motor has not reached a stable speed after ramp up. 1. Ramp time settings of the VSD are not shorter than those of the basic unit (parameters 522, 523). 2. Characteristic of the VSD is not linear. Configuration of the voltage input at the VSD must accord with that of the basic unit (parameter 645). 3. VSD does not follow quickly enough the changes of the basic unit. Check settings of the VSD (input filter, slippage compensation, hiding different speeds) 4. Speed of VSD lies below the minimum for standardization (650 1/min)
	5	*Wrong direction of rotation*	Motor's direction of rotation is wrong. 1. Motor turns indeed in the wrong direction → change parameterization of the direction of rotation or interchange 2 live conductors. 2. Sensor disk is fitted the wrong way → turn the sensor disk.
	6	*Unplausible sensor signals*	The required pulse pattern (60°, 120°, 180°) has not been correctly identified. 1. Speed sensor does not detect all tappets of the sensor disk → check distance 2. As the motor turns, other metal parts are detected also, in addition to the tappets → improve mounting. 3. Electromagnetic interference on the sensor lines → check cable routing, improve EMC
	7	*Invalid standardized speed*	The standardized speed measured does not lie in the permissible range → motor turns too slowly or too fast
	15	*Speed deviation µC1 + µC2*	The speeds of microcomputer 1 and 2 deviated too much. This can be caused by wrong standardized speeds (e.g. after restoring a data set to a new unit) → repeat standardization and check the fuel-air ratio

Error code	Diagnostic code	Meaning for the LMV2x/3x... system	Remedy
	20	*Wrong phase of phase manager*	Standardization was made in a wrong phase. Permitted are only phases ≤12 → controller OFF, start standardization again
	21	*Safety loop / burner flange open*	Safety loop or burner flange is open → repeat standardization with safety loop closed
	22	*Air actuator not referenced*	Air actuator has not been referenced or has lost its referencing. 1. Check if the reference position can be approached. 2. Check if actuators have been mixed up. 3. If error only occurs after the start of standardization, the actuator might be overloaded and cannot reach its destination.
	23	*VSD deactivated*	Standardization was started with VSD deactivated → activate the VSD and repeat standardization
	24	*No valid operating mode*	Standardization was started without valid operating mode → activate valid operating mode and repeat standardization
	25	*Pneumatic air-fuel ratio control*	Standardization was started with pneumatic air-fuel ratio control → standardization with pneumatic air-fuel ratio control not possible
	128	*Running command with no preceding standardization*	VSD is controlled but not standardized → make standardization
	255	*No standardized speed available*	Motor turns but is not standardized → make standardization

Error code	Diagnostic code	Meaning for the LMV2x/3x... system	Remedy
83	**#**	**Speed error VSD**	Required speed has not been reached
	Bit 0 *Valency 1*	*Lower control range limitation of control*	Speed has not been reached because control range limitation has become active → for measures, refer to error code 80
	Bit 1 *Valency 2...3*	*Upper control range limitation of control*	Speed has not been reached because control range limitation has become active → for measures, refer to error code 80
	Bit 2 *Valency 4...7*	*Interruption via disturbance pulses*	Speed has not been reached due to too much electromagnetic interference on the sensor line → for measures, refer to error code 81
	Bit 3 *Valency ≥ 8*	*Curve too steep in terms of ramp speed*	Speed has not been reached because detected curve slope was too steep. 1. With a LMV26... ramp of 20 s, the curve's slope may be a maximum of 10% speed change between 2 curvepoints in modulating mode. With a LMV26... ramp of 10 s, the curve's slope may be a maximum of 20% speed change between 2 curvepoints in modulating mode. With a LMV26... ramp of 5 s, the curve's slope may be a maximum of 40% speed change between 2 curvepoints in modulating mode. → Between the ignition point (P0) and the low-fire point (P1), the speed change in modulating mode may be a maximum of 40%, independent of the LMV26... ramp. 2. The setting of the VSD ramp must be about 20% faster than the ramps in the basic unit (parameters 522, 523).
	Bit 4 *Valency ≥ 16*	*Interruption of speed signal*	No speed detected in spite of control. 1. Check if the motor turns. 2. Check if the speed sensor delivers a signal (LED / check distance from the sensor disk). 3. Check wiring of the VSD.
	Bit 5 *Valency ≥ 32*	*Quick shutdown due to excessive speed deviation*	Speed deviation was for about 1 s >10% outside the anticipated range. 1. Check ramp times of the LMV26... and VSD. 2. Check wiring of the VSD.

Error code	Diagnostic code	Meaning for the LMV2x/3x... system	Remedy
84	**#**	**Curve slope actuators**	
	Bit 0 *Valency 1*	*VSD: Curve too steep in terms of ramp speed*	1. The curve's slope may be a maximum of 10% speed change between 2 curvepoints in modulating operation, with a LMV26... ramp of 20 seconds The curve's slope may be a maximum of 20% speed change between 2 curvepoints in modulating operation, with a LMV26... ramp of 10 seconds The curve's slope may be a maximum of 40% speed change between 2 curvepoints in modulating operation, with a LMV26... ramp of 5 seconds → Between the ignition point (P0) and the low-fire point (P1), the speed change in modulating mode may be a maximum of 40%, independent of the LMV26... ramp. 2. Setting of the VSD ramp must be about 20% shorter than the ramps in the basic unit (parameters 522 and 523)
	Bit 1 *Valency 2..3*	*Fuel actuator: Curve too steep in terms of ramp rate*	The slope of the curve may be a maximum position change of 31° between 2 curvepoints in modulating mode
	Bit 2 *Valency 4..7*	*Air actuator: Curve too steep in terms of ramp rate*	The slope of the curve may be a maximum position change of 31° between 2 curvepoints in modulating mode
85	**#**	*Referencing error ones actuators*	
	0	*Referencing error of fuel actuator*	Referencing of fuel actuator not successful. Reference point could not be reached. 1. Check to see if actuators have been mixed up. 2. Check to see if actuator is locked or overloaded.
	1	*Referencing error of air actuator*	Referencing of fuel actuator not successful Reference point could not be reached. 1. Check to see if actuators have been mixed up. 2. Check to see if actuator is locked or overloaded.
	Bit 7 *Valency ≥ 128*	*Referencing error due to parameter change*	Parameterization of an actuator (e.g. the reference position) has been changed. To trigger new referencing, this error is set
86	**#**	**Error fuel actuator**	
	0	*Position error*	Target position could not be reached within the required tolerance band → check to see if actuator is locked or overloaded
	Bit 0 *Valency 1*	*Line interruption*	*Line interruption* detected at actuator's terminals → check wiring (voltage X54 across pin 5 or 6 and pin 2 >0.5 V)
	Bit 3 *Valency ≥8*	*Curve too steep in terms of ramp rate*	The slope of the curve may be a maximum position change of 31° between 2 curvepoints in modulating mode
	Bit 4 *Valency ≥ 16*	*Step deviation in comparison with last referencing*	Actuator was overloaded or mechanically twisted. 1. Check to see if the actuator is blocked somewhere along its working range. 2. Check to see if the torque is sufficient for the application.

Error code	Diagnostic code	Meaning for the LMV2x/3x... system	Remedy
87	**#**	**Error air actuator**	
	0	*Position error*	Target position could not be reached within the required tolerance band → check to see if actuator is locked or overloaded
	Bit 0 *Valency 1*	*Line interruption*	Line interruption detected at actuator's terminals → check wiring (voltage X53 across pin 5 or 6 and pin 2 >0.5 V)
	Bit 3 *Valency ≥ 8*	*Curve too steep in terms of ramp rate*	The slope of the curve may be a maximum position change of 31° between 2 curvepoints in modulating mode
	Bit 4 *Valency ≥ 16*	*Sectional deviation in comparison with last referencing*	Actuator was overloaded or mechanically twisted. 1. Check to see if the actuator is blocked somewhere along its working range. 2. Check to see if the torque is sufficient for the application.
90	**#**	**Internal error basic unit**	
91	**#**	**Internal error basic unit**	
93	**#**	**Error flame signal acquisition**	
	3	*Short-circuit of sensor*	Short-circuit at QRB... 1. Check wiring. 2. Flame detector possibly fault.
95	**#**	**Error relay supervision**	
	3 Ignition transformer *4 Fuel valve 1* *5 Fuel valve 2* *6 Fuel valve 3*	*External power supply NO contact*	Check wiring
96	**#**	**Error relay supervision**	
	3 Ignition transformer *4 Fuel valve 1* *5 Fuel valve 2* *6 Fuel valve 3*	*Relay contacts have welded*	Test the contacts: 1. Unit connected to power: Fan output must be dead. 2. Disconnect power: Disconnect fan. No resistive connection between fan output and neutral conductor allowed. If one of the 2 tests fails, release the unit since contact have definitively welded and safety can no longer be ensured.
97	**#**	**Error relay supervision**	
	0	*Safety relay contacts have welded or external power supply fed to safety relay*	Test the contacts: 1. Unit connected to power: Fan output must be dead. 2. Disconnect power: Disconnect fan. No resistive connection between fan output and neutral conductor allowed. If one of the 2 tests fails, release the unit since contacts have definitively welded and safety can no longer be ensured.

Error code	Diagnostic code	Meaning for the LMV2x/3x... system	Remedy
98	**#**	**Error relay supervision**	
	2 Safety valve *3 Ignition transformer* *4 Fuel valve 1* *5 Fuel valve 2* *6 Fuel valve 3*	*Relay does not pull in*	Make a reset; if error occurs repeatedly, replace the unit
99	**#**	**Internal error relay control**	Make a reset; if error occurs repeatedly, replace the unit
	3	*Internal error relay control*	Make a reset. If error occurs repeatedly, replace the unit Software version V03.10: If error C:99 D:3 occurs during standardization of the VSD, deactivate temporarily function *Alarm in case of start prevention* (parameter number 210 = 0, when using a release contact) or *interrupt* the controller-ON signal
100	**#**	**Internal error relay control**	Make a reset; if error occurs repeatedly, replace the unit
105	**#**	**Internal error contact sampling**	
	0 Pressure switch-min *1 Pressure switch-max / POC* *2 Fuel selection 0 / Reset* *3 Air pressure* *4 Load controller open* *5 Load controller on / off* *6 Load controller close* *7 Safety loop / Burner flange* *8 Safety valve* *9 Ignition transformer* *10 Fuel valve 1* *11 Fuel valve 2* *12 Fuel valve 3* *13 Fuel selection 1 / Reset*	*Stuck-At failure*	Can be caused by capacitive loads or supply of DC voltage to the mains voltage inputs. The diagnostic code indicates the input where the problem occurred
106	**#**	**Internal error contact request**	Make a reset; if error occurs repeatedly, replace the unit
107	**#**	**Internal error contact request**	Make a reset; if error occurs repeatedly, replace the unit
108	**#**	**Internal error contact request**	Make a reset; if error occurs repeatedly, replace the unit
110	**#**	**Internal error voltage monitor test**	Make a reset; if error occurs repeatedly, replace the unit
111	**#**	**Power failure**	Mains voltage to low Exchange ratio diagnostics code → voltage value (230 V: 1.683)
112	*0*	*Mains voltage recovery*	Error code for triggering a reset on power restoration (no error)
113	**#**	**Internal error mains voltage supervision**	Make a reset; if error occurs repeatedly, replace the unit
115	**#**	**Internal error system counter**	
116	*0*	*Designed life time exceeded (250´000 startups)*	Warning threshold has been reached. The unit should be replaced

Error code	Diagnostic code	Meaning for the LMV2x/3x... system	Remedy
117	*0*	*Life time exceeded* *Operation no longer allowed*	Switch-off threshold has been reached
120	*0*	*Interrupt limitation fuel meter input*	Too many disturbance pulses at the fuel meters input → Improve EMC
121	**#**	**Internal error EEPROM access**	Make a reset, repeat last parameterization / check. Restore the parameter set, if error occurs repeatedly, replace the unit
122	**#**	**Internal error EEPROM access**	Make a reset, repeat last parameterization / check. Restore the parameter set, if error occurs repeatedly, replace the unit
123	**#**	**Internal error EEPROM access**	Make a reset, repeat last parameterization / check. Restore the parameter set, if error occurs repeatedly, replace the unit
124	**#**	**Internal error EEPROM access**	Make a reset, repeat last parameterization / check. Restore the parameter set, if error occurs repeatedly, replace the unit
125	**#**	**Internal error EEPROM read access**	Make a reset, repeat last parameterization / check. If error occurs repeatedly, replace the unit
126	**#**	**Internal error EEPROM write access**	Make a reset, repeat last parameterization / check. If error occurs repeatedly, replace the unit
127	**#**	**Internal error EEPROM access**	Make a reset, repeat last parameterization / check. Restore the parameter set, if error occurs repeatedly, replace the unit
128	*0*	*Internal error EEPROM access - synchronization during initialization*	Make a reset; if error occurs repeatedly, replace the unit
129	**#**	**Internal error EEPROM access – command synchronization**	Make a reset, repeat last parameterization / check. If error occurs repeatedly, replace the unit
130	**#**	**Internal error EEPROM access - timeout**	Make a reset, repeat last parameterization / check. If error occurs repeatedly, replace the unit
131	**#**	**Internal error EEPROM access - page on abort**	Make a reset, repeat last parameterization / check. If error occurs repeatedly, replace the unit
132	**#**	**Internal error EEPROM register initialization**	Make a reset; if error occurs repeatedly, replace the unit
133	**#**	**Internal error EEPROM access – Request synchronization**	Make a reset, repeat last parameterization / check. If error occurs repeatedly, replace the unit
134	**#**	**Internal error EEPROM access – Request synchronization**	Make a reset, repeat last parameterization / check. If error occurs repeatedly, replace the unit
135	**#**	**Internal error EEPROM access – Request synchronization**	Make a reset, repeat last parameterization / check. If error occurs repeatedly, replace the unit
136	*1*	*Restore started*	Restore of a backup has been started (no error)

Error code	Diagnostic code	Meaning for the LMV2x/3x... system	Remedy
137	**#**	**Internal error – backup / restore**	
	157 (-99)	*Restore – ok, but backup < data set of current system*	Restore successful, but backup data record is smaller than in the current system
	239 (-17)	*Backup – storage of backup in AZL2... faulty*	Reset and repeat backup
	240 (-16)	*Restore – no backup in AZL2...*	No backup stored in AZL2...
	241 (-15)	*Restore – abortion due to unsuitable product no. (ASN)*	Backup has an unsuitable product no. (ASN) and must not be restored
	242 (-14)	*Backup – backup made is inconsistent*	Backup is faulty and cannot be transferred back
	243 (-13)	*Backup – data comparison between µCs faulty*	Reset and repeat backup
	244 (-12)	*Backup data are incompatible*	Backup data are incompatible with the current software version, restore not possible
	245 (-11)	*Access error to parameter Restore_Complete*	Reset and repeat backup
	246 (-10)	*Restore – timeout when storing in EEPROM*	Reset and repeat backup
	247 (-9)	*Data received are inconsistent*	Backup data record invalid, restore not possible
	248 (-8)	*Restore cannot at present be made*	Reset and repeat backup
	249 (-7)	*Restore – abortion due to unsuitable burner identification*	Backup has an unsuitable burner identification and must not be transferred to the unit
	250 (-6)	*Backup – CRC of one page is not correct*	Backup data record invalid, restore not possible
	251 (-5)	*Backup – burner identification is not defined*	Define burner identification and repeat backup
	252 (-4)	*After restore, pages still on ABORT*	Reset and repeat backup
	253 (-3)	*Restore cannot at present be made*	Reset and repeat backup
	254 (-2)	*Abortion due to transmission error*	Reset and repeat backup
	255 (-1)	*Abortion due to timeout during backup / restore*	Make a reset, check the connections and repeat backup / restore In case of repeated backup timeout, the AZL2... does not yet support backup functionality
146	**#**	**Timeout building automation interface**	Refer to Modbus User Documentation (A7541)
	1	*Modbus timeout*	
	2	*reserved*	

Error code	Diagnostic code	Meaning for the LMV2x/3x... system	Remedy
150	**#**	**TÜV test**	
	1 (-1)	*Invalid phase*	TÜV test may only be started in phase 60 (operation)
	2 (-2)	*TÜV test default output too low*	TÜV test default output must not be smaller than the lower output limit
	3 (-3)	*TÜV test default output too high*	TÜV test default output must not be greater than the upper output limit
	4 (-4)	*Manual interruption*	No error: Manual abortion of TÜV test by user
	5 (-5)	*TÜV test timeout*	No loss of flame after shutdown of fuel valves 1. Check to see if there is extraneous light 2. Check wiring to see if there is a short-circuit 3. Check to see if valve is leaking
165	**#**	**Internal error**	
166	*0*	*Internal error watchdog reset*	
167	**#**	**Manual locking**	Unit has been manually locked (no error)
	1	*Manual locking by contact*	
	2	*Manual locking by AZL2...*	
	3	*Manual locking by PC tool*	
	8	*Manual locking by the AZL2...* *Timeout / communication breakdown*	During a curve adjustment via the AZL2..., the timeout for menu operation has elapsed (setting via parameter 127), or communication between the LMV26... and the AZL2... has broken down
	9	*Manual locking by the PC tool* *Communication breakdown*	During a curve adjustment via the ACS410, communication between the LMV26... and the ACS410 was interrupted for more than 30 seconds
	33	*Manual locking by the PC tool* *Test of lockout*	PC tool made a reset attempt with an error-free system
168	**#**	**Internal error management**	Make a reset; if error occurs repeatedly, replace the unit
169	**#**	**Internal error management**	Make a reset; if error occurs repeatedly, replace the unit
170	**#**	**Internal error management**	Make a reset; if error occurs repeatedly, replace the unit
171	**#**	**Internal error management**	Make a reset; if error occurs repeatedly, replace the unit
200 OFF	**#**	**System error-free**	No error

Error code	Diagnostic code	Meaning for the LMV2x/3x... system	Remedy
201 OFF UPr0 or **OFF UPr1**	**#**	**Prevention of startup**	Start prevention due to unparameterized unit Go to error history, entry 702, for initial cause of the error with shutdown in connection with the first curve settings
	Bit 0 *Valency 1*	*No operating mode selected*	
	Bit 1 *Valency 2..3*	*No fuel train defined*	
	Bit 2 *Valency 4..7*	*No curves defined*	
	Bit 3 *Valency 8..15*	*Standardized speed undefined*	
	Bit 4 *Valency 16..31*	*Backup / restore was not possible*	
202	**#**	**Internal error operating mode selection**	Redefine the operating mode (parameter 201)
203	**#**	**Internal error**	Redefine the operating mode (parameter 201). Make a reset; if error occurs repeatedly, replace the unit
204	**Phase number**	**Program stop**	Program stop is active (no error)
205	**#**	**Internal error**	Make a reset; if error occurs repeatedly, replace the unit
206	*0*	*Inadmissible combination of units* *(basic unit – AZL2...)*	
207	**#**	**Version compatibility basic unit – AZL2...**	
	0	*Basic unit version too old*	
	1	*AZL2... version too old*	
208	**#**	**Internal error**	Make a reset; if error occurs repeatedly, replace the unit
209	**#**	**Internal error**	Make a reset; if error occurs repeatedly, replace the unit
210	*0*	*Selected operating mode is not released for the basic unit*	Select a released operating mode for the basic unit
240	**#**	**Internal error**	Make a reset; if error occurs repeatedly, replace the unit
245	**#**	**Internal error**	Make a reset; if error occurs repeatedly, replace the unit
250	**#**	**Internal error**	Make a reset; if error occurs repeatedly, replace the unit

WIRING DIAGRAM

Wiring connection for LMV20

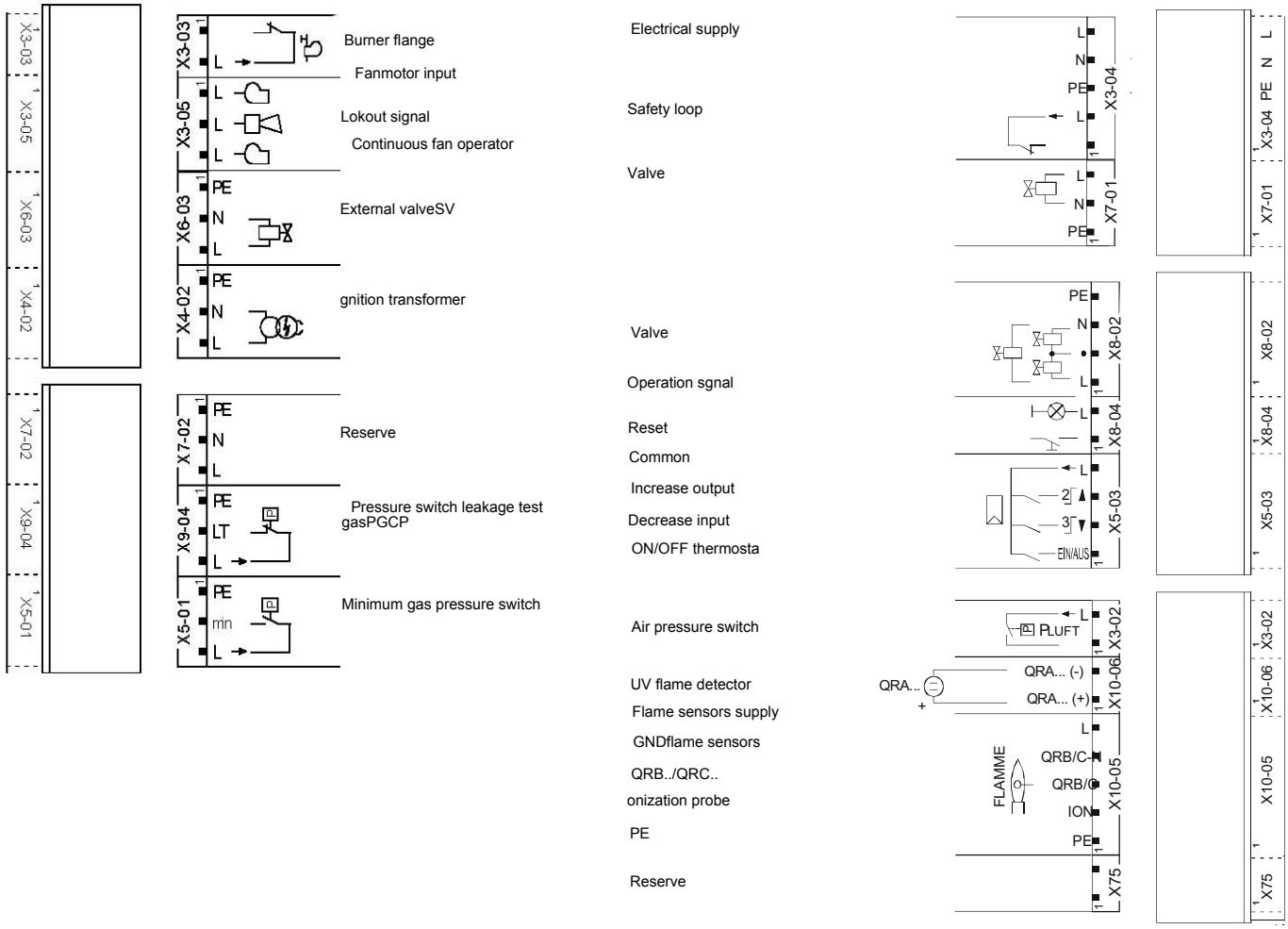

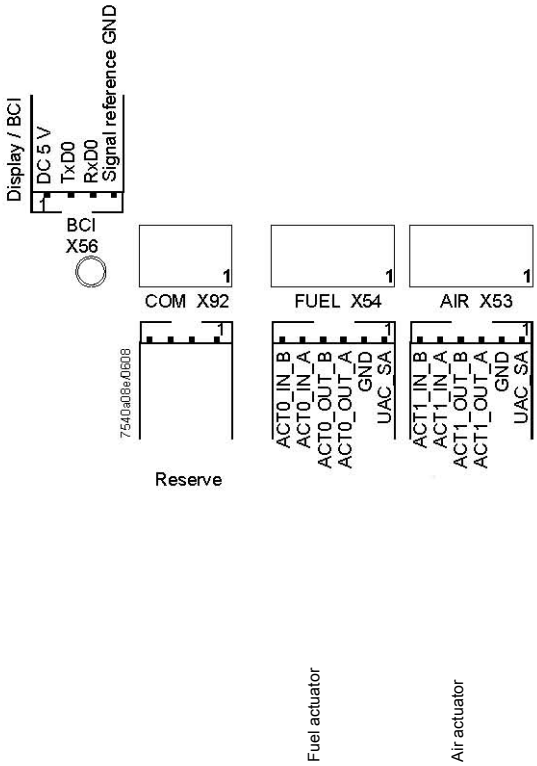

Wiring variants for LMV27

ConnectorX75

2 - Fuel meter input

1 - Supply fuel meter

ConnectorX5-02

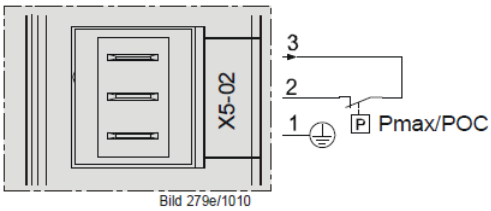

ConnectionsPmax

Wiring variants for LMV26

ConnectorX08-04 / X09-04

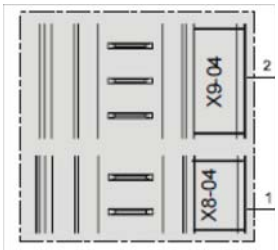

2 - Fuel 0

1 - Fuel1

ConnectorX75

2 - Fuel meter input

1 - Supply fuel meter

ConnectorX64

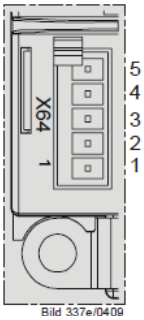

5 -Power supply speed sensor

4 -Speed sensor input

3 - PWM (Pulse Width Modulation) speed output

2 - GND (signal reference)

1 -Controller input (4÷20mA)

ConnectorX74

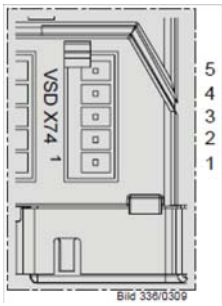

5 -Supply

4 -Feedback signal

3 - PWM (Pulse Width Modulation) speed output

2 - GND (signal reference)

1 -External supply 24V DC

Wiring variants for LMV37

ConnectorX75

2 - Fuel meter input

1 - Supply fuel meter

ConnectorX5-02

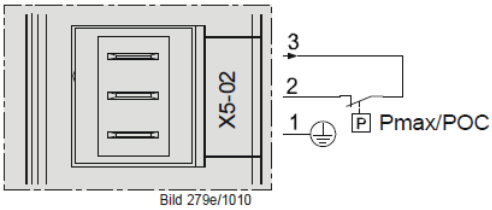

Connections Pmax

ConnectorX64

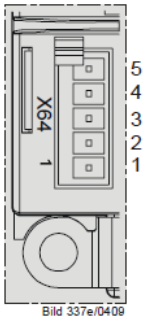

5 -Power supply speed sensor

4 -Speed sensor input

3 - PWM (Pulse Width Modulation) speed output

2 - GND (signal reference)

1 -Controller input (4÷20mA)

ConnectorX74

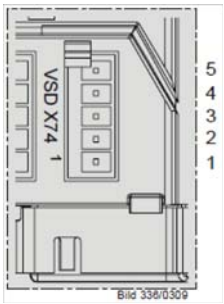

5 -Supply

4 -Feedback signal

3 - PWM (Pulse Width Modulation) speed output

2 - GND (signal reference)

1 -External supply 24V DC

C.I.B. UNIGAS S.p.A.
Via L.Galvani, 9 - 35011 Campodarsego (PD) - ITALY
Tel. +39 049 9200944 - Fax +39 049 9200945/9201269
web site: www.cibunigas.it - e-mail: cibunigas@cibunigas.it

Note: Specifications and and data subject to change. Errors and omissions excepted.