TN1030
TN1050

Heavy oil
Industrial Burners

MANUAL OF INSTALLATION - USE - MAINTENANCE

CIB UNIGAS

BURNERS - BRUCIATORI - BRULERS - BRENNER - QUEMADORES - ГОРЕЛКИ

M039208CA REV. 0 03/2008

WARNINGS

THIS MANUAL IS SUPPLIED AS AN INTEGRAL AND ESSENTIAL PART OF THE PRODUCT AND MUST BE DELIVERED TO THE USER.

INFORMATION INCLUDED IN THIS SECTION ARE DEDICATED BOTH TO THE USER AND TO PERSONNEL FOLLOWING PRODUCT INSTALLATION AND MAINTENANCE.

THE USER WILL FIND FURTHER INFORMATION ABOUT OPERATING AND USE RESTRICTIONS, IN THE SECOND SECTION OF THIS MANUAL. WE HIGHLY RECOMMEND TO READ IT.

CAREFULLY KEEP THIS MANUAL FOR FUTURE REFERENCE..

1) GENERAL INTRODUCTION

- The equipment must be installed in compliance with the regulations in force, following the manufacturer's instructions, by qualified personnel.
- Qualified personnel means those having technical knowledge in the field of components for civil or industrial heating systems, sanitary hot water generation and particularly service centres authorised by the manufacturer.
- Improper installation may cause injury to people and animals, or damage to property, for which the manufacturer cannot be held liable.
- Remove all packaging material and inspect the equipment for integrity.

In case of any doubt, do not use the unit - contact the supplier.

The packaging materials (wooden crate, nails, fastening devices, plastic bags, foamed polystyrene, etc), should not be left within the reach of children, as they may prove harmful.

- Before any cleaning or servicing operation, disconnect the unit from the mains by turning the master switch OFF, and/or through the cut-out devices that are provided.
- Make sure that inlet or exhaust grilles are unobstructed.
- In case of breakdown and/or defective unit operation, disconnect the unit. Make no attempt to repair the unit or take any direct action.

Contact qualified personnel only.

Units shall be repaired exclusively by a servicing centre, duly authorised by the manufacturer, with original spare parts.

Failure to comply with the above instructions is likely to impair the unit's safety.

To ensure equipment efficiency and proper operation, it is essential that maintenance operations are performed by qualified personnel at regular intervals, following the manufacturer's instructions.

- When a decision is made to discontinue the use of the equipment, those parts likely to constitute sources of danger shall be made harmless.
- In case the equipment is to be sold or transferred to another user, or in case the original user should move and leave the unit behind, make sure that these instructions accompany the equipment at all times so that they can be consulted by the new owner and/or the installer.
- For all the units that have been modified or have options fitted then original accessory equipment only shall be used.
- This unit shall be employed exclusively for the use for which it is meant. Any other use shall be considered as improper and, therefore, dangerous.

The manufacturer shall not be held liable, by agreement or otherwise, for damages resulting from improper installation, use and failure to comply with the instructions supplied by the manufacturer.

2) SPECIAL INSTRUCTIONS FOR BURNERS

- The burner should be installed in a suitable room, with ventilation openings complying with the requirements of the regulations in force, and sufficient for good combustion.
- Only burners designed according to the regulations in force should be used.
- This burner should be employed exclusively for the use for which it was designed.
- Before connecting the burner, make sure that the unit rating is the same as delivery mains (electricity, gas oil, or other fuel).
- Observe caution with hot burner components. These are, usually, near to the flame and the fuel pre-heating system, they become hot during the unit operation and will remain hot for some time after the burner has stopped.

When the decision is made to discontinue the use of the burner, the user shall have qualified personnel carry out the following operations:

a Remove the power supply by disconnecting the power cord from the mains.

b) Disconnect the fuel supply by means of the hand-operated shut-off valve and remove the control handwheels from their spindles.

Special warnings

- Make sure that the burner has, on installation, been firmly secured to the appliance, so that the flame is generated inside the appliance firebox.
- Before the burner is started and, thereafter, at least once a year, have qualified personnel perform the following operations:

a set the burner fuel flow rate depending on the heat input of the appliance;

b set the flow rate of the combustion-supporting air to obtain a combustion efficiency level at least equal to the lower level required by the regulations in force;

c check the unit operation for proper combustion, to avoid any harmful or polluting unburnt gases in excess of the limits permitted by the regulations in force;

d make sure that control and safety devices are operating properly;

e make sure that exhaust ducts intended to discharge the products of combustion are operating properly;

f on completion of setting and adjustment operations, make sure that all mechanical locking devices of controls have been duly tightened;

g make sure that a copy of the burner use and maintenance instructions is available in the boiler room.

- In case of repeated burner shut-downs, do not continue re-setting the unit manually. Contact qualified personnel to take care of such defects.
- The unit shall be operated and serviced by qualified personnel only, in compliance with the regulations in force.

3) GENERAL INSTRUCTIONS DEPENDING ON FUEL USED

3a) ELECTRICAL CONNECTION

- For safety reasons the unit must be efficiently earthed and installed as required by current safety regulations.
- It is vital that all saftey requirements are met. In case of any doubt, ask for an accurate inspection of electrics by qualified personnel, since the manufacturer cannot be held liable for damages that may be caused by failure to correctly earth the equipment.
- Qualified personnel must inspect the system to make sure that it is adequate to take the maximum power used by the equipment shown on the equipment rating plate. In particular, make sure that the system cable cross section is adequate for the power absorbed by the unit.
- No adaptors, multiple outlet sockets and/or extension cables are permitted to connect the unit to the electric mains.
- An omnipolar switch shall be provided for connection to mains, as required by the current safety regulations.
- The use of any power-operated component implies observance of a few basic rules, for example:

© do not touch the unit with wet or damp parts of the body and/or with bare feet;

© do not pull electric cables;

© do not leave the equipment exposed to weather (rain, sun, etc.) unless expressly required to do so;

© do not allow children or inexperienced persons to use equipment;

- The unit input cable shall not be replaced by the user.

In case of damage to the cable, switch off the unit and contact qualified personnel to replace.

When the unit is out of use for some time the electric switch supplying all

the power-driven components in the system (i.e. pumps, burner, etc.) should be switched off.

3b) FIRING WITH GAS, LIGHT OIL OR OTHER FUELS

GENERAL

- The burner shall be installed by qualified personnel and in compliance with regulations and provisions in force; wrong installation can cause injuries to people and animals, or damage to property, for which the manufacturer cannot be held liable.
- Before installation, it is recommended that all the fuel supply system pipes be carefully cleaned inside, to remove foreign matter that might impair the burner operation.
- Before the burner is commissioned, qualified personnel should inspect the following:

a the fuel supply system, for proper sealing;
b the fuel flow rate, to make sure that it has been set based on the firing rate required of the burner;
c the burner firing system, to make sure that it is supplied for the designed fuel type;
d the fuel supply pressure, to make sure that it is included in the range shown on the rating plate;
e the fuel supply system, to make sure that the system dimensions are adequate to the burner firing rate, and that the system is equipped with all the safety and control devices required by the regulations in force.

- When the burner is to remain idle for some time, the fuel supply tap or taps should be closed.

SPECIAL INSTRUCTIONS FOR USING GAS

Have qualified personnel inspect the installation to ensure that:

a the gas delivery line and train are in compliance with the regulations and provisions in force;
b all gas connections are tight;
c the boiler room ventilation openings are such that they ensure the air supply flow required by the current regulations, and in any case are sufficient for proper combustion.

- Do not use gas pipes to earth electrical equipment.
- Never leave the burner connected when not in use. Always shut the gas valve off.
- In case of prolonged absence of the user, the main gas delivery valve to the burner should be shut off.

Precautions if you can smell gas

a do not operate electric switches, the telephone, or any other item likely to generate sparks;
b immediately open doors and windows to create an air flow to purge the room;
c close the gas valves;
d contact qualified personnel.

- Do not obstruct the ventilation openings of the room where gas appliances are installed, to avoid dangerous conditions such as the development of toxic or explosive mixtures.

DIRECTIVES AND STANDARDS

Gas burners

European directives:
- Directive 90/396/CEE - Gas Appliances;
- Directive 2006/95/EC on low voltage;
- Directive 2004/108/CEE on electromagnetic compatibility

Harmonised standards :
-UNI EN 676 (Gas Burners;
-CEI EN 60335-1(Household and similar electrical appliances - Safety. Part 1: General requirements;
- EN 50165 (Electrical equipment of non-electric appliances for household and similar purposes. Safety requirements.

Light oil burners

European directives:
- Directive 2006/95/EC on low voltage;
- Directive 2004/108/CEE on electromagnetic compatibility

Harmonised standards :
-CEI EN 60335-1(Household and similar electrical appliances - Safety. Part 1: General requirements;
- EN 50165 (Electrical equipment of non-electric appliances for household and similar purposes. Safety requirements.

National standards :
-UNI 7824: Monobloc nebulizer burners for liquid fuels. Characteristics and test methods

Heavy oil burners

European directives:
- Directive 2006/95/EC on low voltage;
- Directive 2004/108/CEE on electromagnetic compatibility

Harmonised standards :
-CEI EN 60335-1 Household and similar electrical appliances - SafetyPart 1: General requirements;
- EN 50165 Electrical equipment of non-electric appliances for household and similar purposes. Safety requirements.

National standards :
-UNI 7824: Monobloc nebulizer burners for liquid fuels. Characteristics and test methods

Gas - Light oil burners

European directives:
- Directive 90/396/CEE Gas Appliances;
- Directive 2006/95/EC on low voltage;
- Directive 2004/108/CEE on electromagnetic compatibility

Harmonised standards :
-UNI EN 676 Gas Burners
-CEI EN 60335-1(Household and similar electrical appliances - Safety. Part 1: General requirements;
- EN 50165 Electrical equipment of non-electric appliances for household and similar purposes. Safety requirements.

National standards :
-UNI 7824: Monobloc nebulizer burners for liquid fuels. Characteristics and test methods

Gas - Heavy oil burners

European directives:
- Directive 90/396/CEE - Gas Appliances;
- Directive 2006/95/EC on low voltage;
- Directive 2004/108/CEE on electromagnetic compatibility

Harmonised standards :
-UNI EN 676 (Gas Burners;
-CEI EN 60335-1(Household and similar electrical appliances - Safety. Part 1: General requirements;
- EN 50165 Electrical equipment of non-electric appliances for household and similar purposes. Safety requirements.

National standards :
-UNI 7824: Monobloc nebulizer burners for liquid fuels. Characteristics and test methods

PART I: INSTALLATION MANUAL

GENERAL FEATURES

This series of industrial burners is designed for all those applications that require big-sized air fans or air-flue heat exchangers to be installed in sound-proof areas to reduce noise. They can be provided with built-in or separately-mounted control panel (console or wall-mounted.

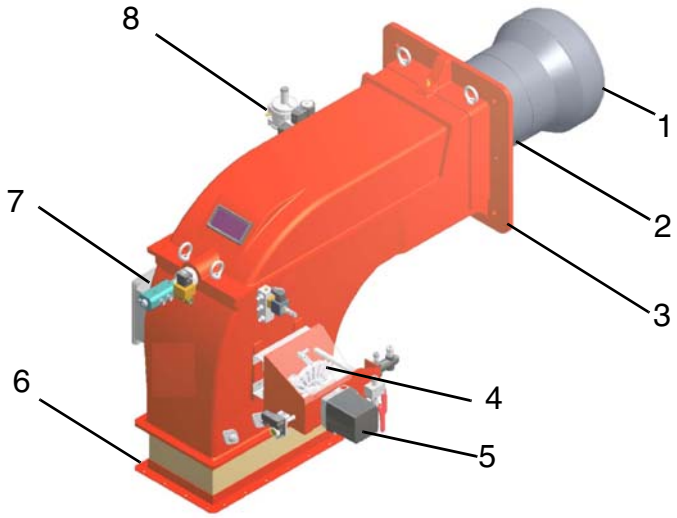

Fig. 1

1 Combustion head
2 Blast tube
3 Burner flange
4 Adjusting cam
5 Actuator
6 Air inlet flange
7 Oil gun
8 Ignitor gas train

The fuel coming from the supply line, is pushed by the pump to the nozzle and then into the combustion chamber, where the mixture between fuel and air takes place and consequently the flame.

In the burners, the mixture bertween fuel and air, to perform clean and efficient combustion, is activated by atomisation of oil into very small particles. This process is achieved making pressurised oil passing through the nozzle.

The pump main function is to transfer oil from the tank to the nozzle in the desired quantity and pressure. To adjust this pressure, pumps are provided with a pressure regulator (except for some models for which a separate regulating valve is provided). Other pumps are provided with two pressure regulators: one for the high and one for low pressure (in double-stage systems with one nozzle).

In the double-stage burners, the electric actuator (5), that moves the air damper, allows the optimisation of the gas flue values, as to get an efficient combustion. The position of the combustion head determines the burner's output. The air (comburent) and fuel (light oil) are forced into the combustion chamber, as to let the flame light up.

How to choose the burner

To check if the burner is suitable for the boiler to which it must be installled, the following parameters are needed:

- fuel
- furnace input, in kW or kcal/h (kW = kcal/h / 860);
- boiler type;
- combustione head type (reverse flame or three phase)'
- temperature or pressure of the thermal carrier fluid
- Comburent air temperature
- Air duct positioning
- Pressure in the combustion chamber
- Elevation (altitude) of burner installation
- Gas train (only for gas burners)
- Pumping unit (only for light-oil or heavy-oil burners)
- Air fan
- Bilt-in or separated control panel

- backpressure (data are available on the boiler ID plate or in the user's manual).

Burners provided with built-in control panel are designed for IP40 index of protection. For other values of IP, please contact the CIB UNIGAS Technical Dpt.

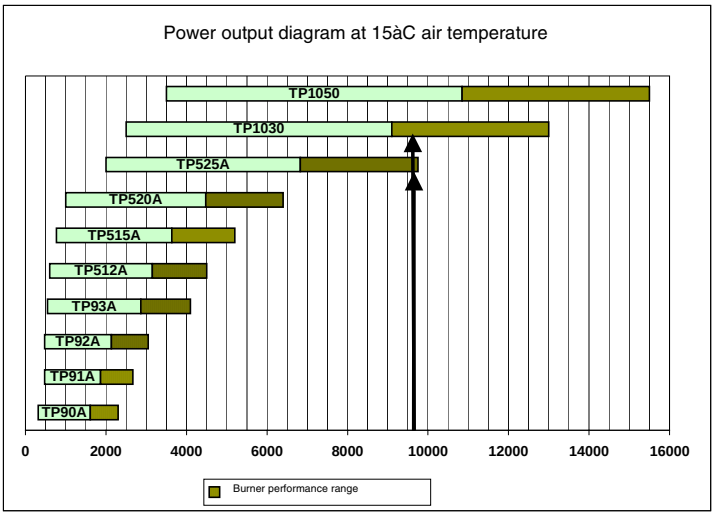

Data requested:

- furnace input;
- air temperature
- altitude
- generator pressure or temperature

Example:

- furnace input: 9600kW
- air temperature: 15°C
- altitude: 0m

Fig. 2

See the diagram in Fig. 2, as to find the burners that better suite the power range requested in the exmple (9600kW). Once the models are founded out, the choice regards technical and economical features. Technical features can be summarised in a higher modulation ratio (fewer start-ups, less consumption, fewer swigings in the generator temperature and pressure values.

Burner model identification

Burners are identified by burner type and model. Burner model identification is described as follows.

Type **TN1030** Model	**N.**	**PR.**	**S.**	***.**	**G.**
(1)	(2)	(3)	(4)	(5)	(6)

(1) BURNER TYPE	**TN1030**
(2) FUEL	N - Heavy oil, standard viscosity <= 7° E @ 50° C D - Heavy oil, high viscosity <= 50° E @ 50° C E - Ecological heavy oil, viscosity between 7°E and 15°E @ 50° C
(3) OPERATION	PR - Progressive MD - Fully-modulating
(4) BLAST TUBE	S - standard
(5) DESTINATION COUNTRY	* - see data plate
(6) BURNER VERSION	G - Control panel and junction box

Specifications

Note: Output values are valid for comburent air temperature lower than 50°C.

		TN 1030	TN 1050
Output	kW	2550 - 13300	3500 - 15500
Fuel		Heavy oil	
Oil viscosity	°E, 50 °C	50	
Flow rate	kg/h	227 - 1158	312 - 1381
Power supply		400V 3Na.c. 50Hz	
Electrical power consumption	kW	54	
Pump motor	kW	5.5	
Pre-heater resistors	kW	24 + 24	
Index of protection		IP40	
Approx. weight	kg	200	
Operation		Progressive - Fully modulating	
Operating temperature	°C	-10 / +50	
Storage temperature	°C	-20 / +60	
Working service *		Intermittent	

*** NOTE ON THE BURNER WORKING SERVICE:** for safety reasons, one controlled shutdown must be performed every 24 hours of continuous operation.

WARNING: the ignitor operates with natural gas or LPG and its working service is intermittent. For further information, see paragraph “Ignitor gas train”.

Performance Curves

TN1030

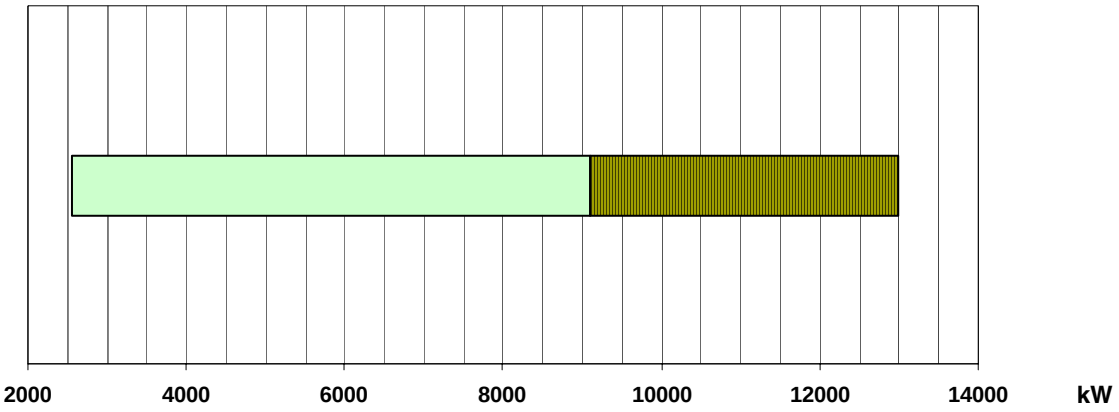

TN1050

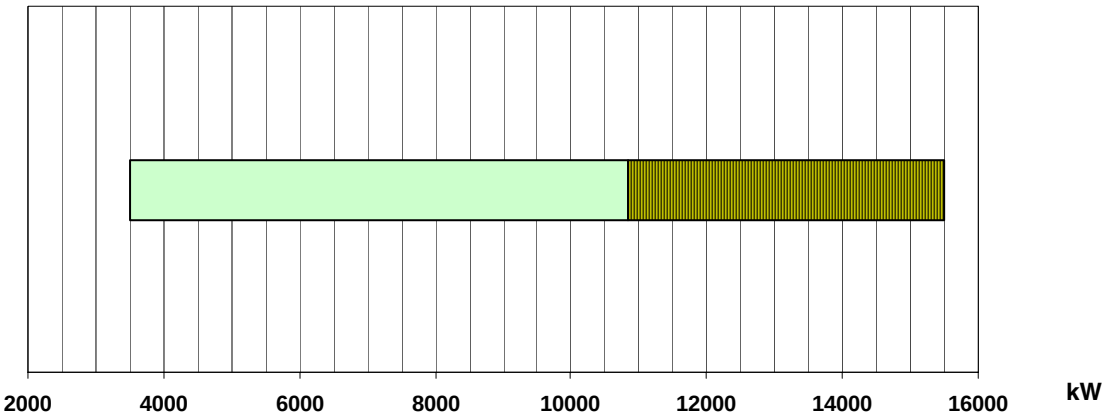

Performance range

To get the input in kcal/h, multiply value in kW by 860. Data are referred to standard conditions: 1013mbar, 15°C

Overall dimensions (mm) (TN1030)

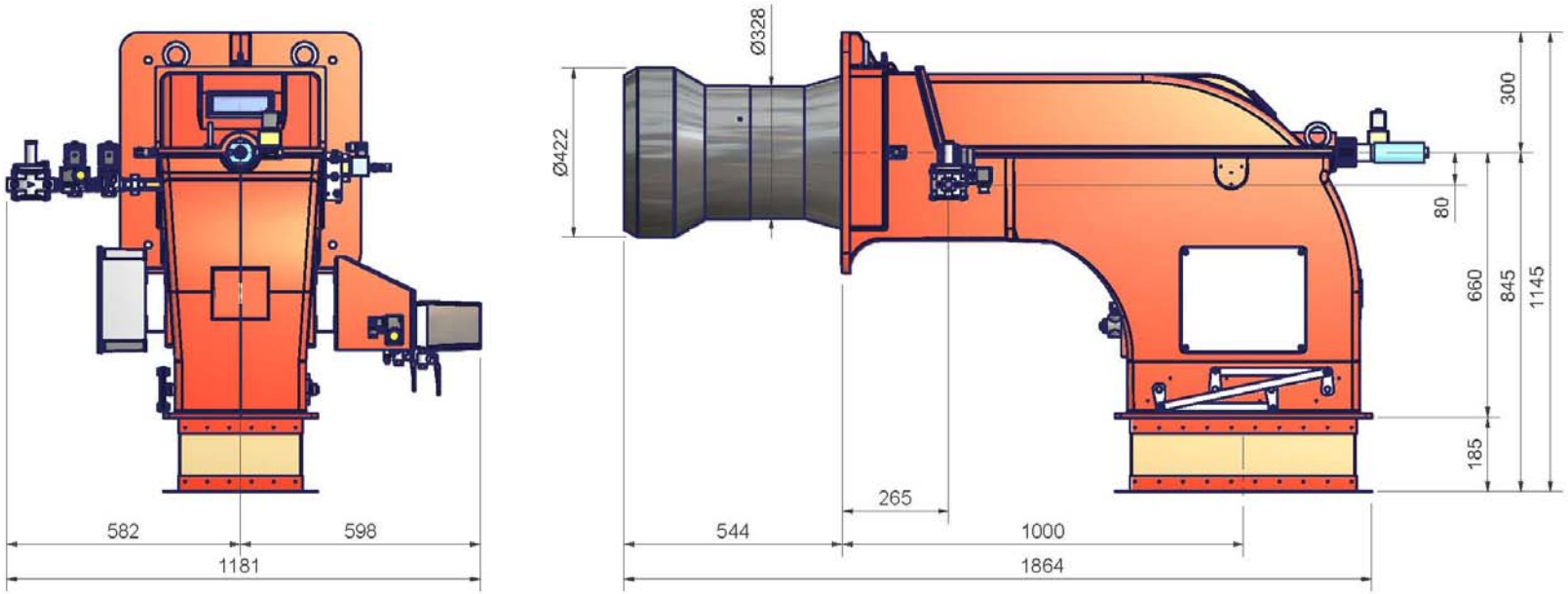

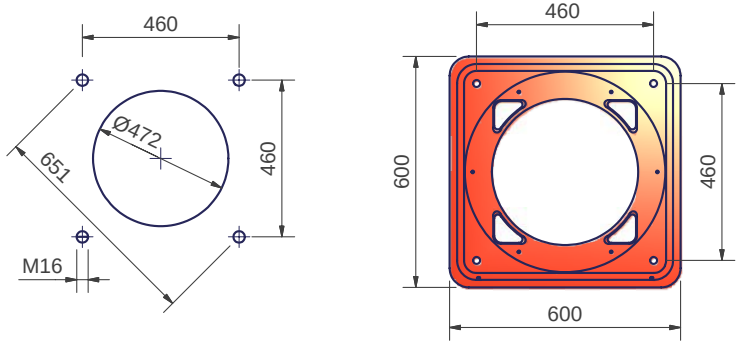

Boiler drilling plate and burner flange

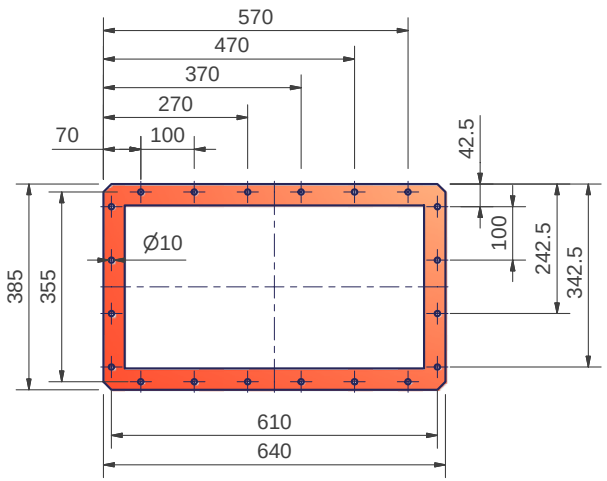

Air inlet flange

MOUNTING AND CONNECTING THE BURNER

Packing

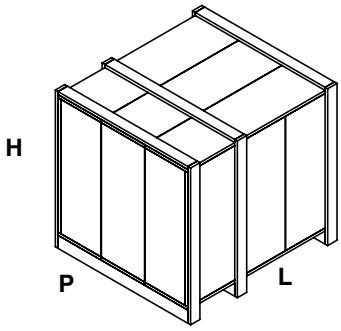

The burners are despatched in wooden crates whose dimensions are:

2280 x 1730 x 1360mm (L x P x H)

Packing cases of this kind are affected by humidity and are not suitable for stacking. In each packing case, you will find:

1 burner;
2 flexible hoses;
1 light oil filter;
1 gasket to be inserted between the burner and the boiler;
1 envelope containing this manual.

Packing cases of this type are affected by humidity and are not suitable for stacking.

The following are placed in each packing case:

Handling the burner

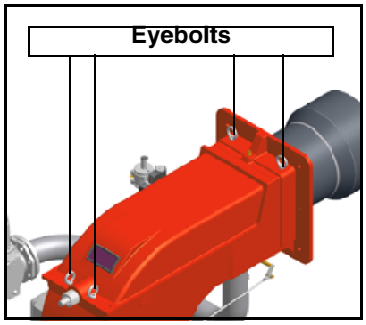

⚠	**ATTENTION! the lfting and moving operations must be carried out by specialised and trained personnel. If these operations are not carried out perfectly, there is the residual risk of the burner to overturn and fall down.**
	As for moving the burner, use means suited for the weight to sustain (see paragraph "Technical specifications").

The burner is provided with eyebolts, for handling operations.

Fitting the burner to the boiler

To perform the installation, proceed as follows:

1 drill the furnace plateas decribed in paragraph ("Overall dimensions");
2 place the burner towards the furnace plate: lift and move the burner by means of its eyebolts placed on the top side (see"Lifting and moving the burner");
3 screw the stud bolts (5) in the plate holes, according to the burner's drilling plate described on paragraph "Overall dimensions";
4 place the gasket on the burner's flange;
5 install the burner into the boiler;
6 fix the burner to the stud bolts, by means of the fixing nuts, according to the picture below.
7 After fitting the burner to the boiler, ensure that the gap between the blast tube and the refractory lining is sealed with appropriate insulating material (ceramic fibre cord or refractory cement).

;

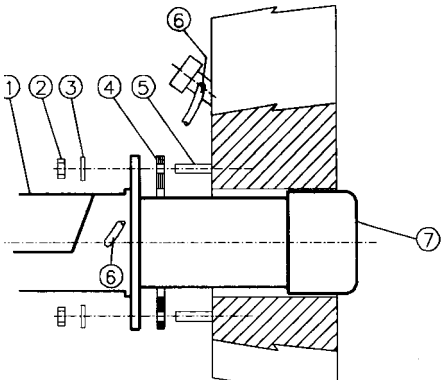

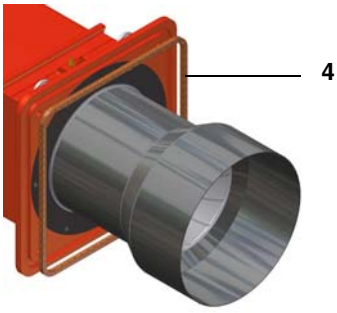

Keys

1 Burner
2 Fixing nut
3 Washer
4 Ceramic fibre plait
5 Stud bolt
7 Blast tube

Installing the fan

Pay attention when designing the air duct: dimensioning must be performed according to the flow rate, the temperature, the distance between the fan and the burner and according to the fan features as well.

⚠	**ATTENTION!** The bellows unit provided is made of canvas and is provided with blocking spacers to avoid breaking it during installation: **first** place the bellows unit between flanges, **then** remove the spacers.

Matching the burner to the boiler

The burners described in this manual have been tested with combustion chambers that comply with EN676 regulation and whose dimensions are described in the diagram . In case the burner must be coupled with boilers with a combustion chamber smaller in diameter or shorter than those described in the diagram, please contact the supplier, to verify that a correct matching is possible, with respect of the application involved. To correctly match the burner to the boiler verify the necessary input and the pressure in combustion chamber are included in the burner performance curve; otherwise the choice of the burner must be revised consulting the burner manufacturer. To choose the blast tube lenght follow the instructions of the boiler manufacturer. In absence of these consider the following:

- Cast-iron boilers, three pass flue boilers (with the first pass in the rear part): the blast tube must protrude no more than 100 mm into the combustion chamber.
- Pressurised boilers with flame reversal: in this case the blast tube must penetrate at least 50 - 100 mm into combustion chamber in respect to the tube bundle plate.

The length of the blast tubes does not always allow this requirement to be met, and thus it may be necessary to use a suitably-sized spacer to move the burner backwards or to design a blast tube tha suites the utilisation (please, contact the manifacturer).

Burner ignitor

Execute the burner ignitor connections as follows:

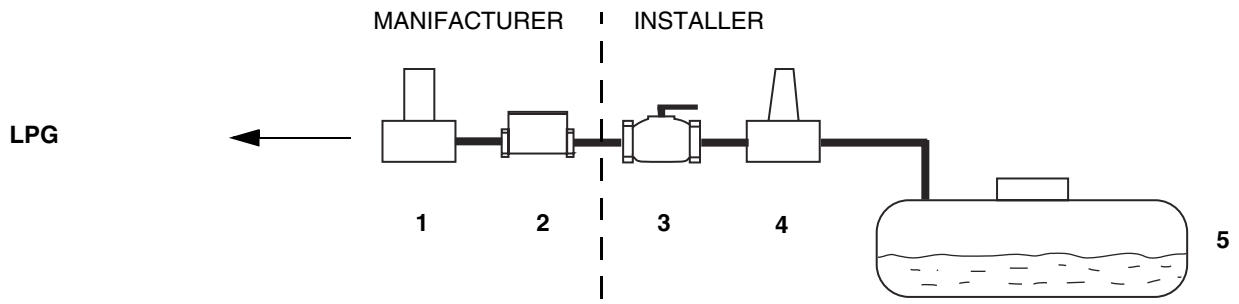

Legenda

1 Gas valve
2 Gas filter
3 Manual cutoff valve
4 Pressure reducer
5 Tank

Gas supply: LPG

Gas pressure: 100 mbar

Once the gas train in installed, execute the electrical connections for all its items (gas valves group, pressure switch).

⚠	**ATTENTION:** once the gas train is mounted according to the diagram on picture above, the gas proving test mus be performed, according to the procedure set by the laws in force.

Hydraulic system

The pumps that are used can be installed both into single-pipe and double-pipe systems.

Single-pipe system: a single pipe drives the oil from the tank to the pump's inlet. Then, from the pump, the pressurised oil is driven to the nozzle: a part comes out from the nozzle while the othe part goes back to the pump. In this system, the by-pass plug, if provided, must be removed and the optional return port, on the pump's body, must be sealed by steel plug and washer.

Double-pipe system: as for the single pipe system, a pipe that connects the tank to the pump's inlet is used besides another pipe that connects the pump's return port to the tank, as well. The excess of oil goes back to the tank: this installation can be considered self-bleeding. If provided, the inside by-pass plug must be installed to avoid air and fuel passing through the pump.

Burners come out from the factory provided for double-pipe systems. They can be suited for single-pipe system (recommended in the case of gravity feed) as decribed before.

The bypass plug inserted beween high pressure and shaft seal is only intended to change the pump rotation, check the presence of this plug with a 4 mm Allen key in the pressure outlet of the pump.

Caution: changing the direction of pump rotation involves changing of all pump connections.

To change from a 1-pipe system to a 2-pipe-system, insert the by-pass plug **G** (as for ccw-rotation- referring to the pump shaft).

Caution: Changing the direction of rotation, all connections on top and side are reversed.

pipeline length in meters.

Key

A Oil under suction
B Oil under pressure
1 To the pressure adjustment valve
2 Vacuum gauge port
3 Pressure gauge port
5 Suction (from the tank)
6 By-pass plug inserted

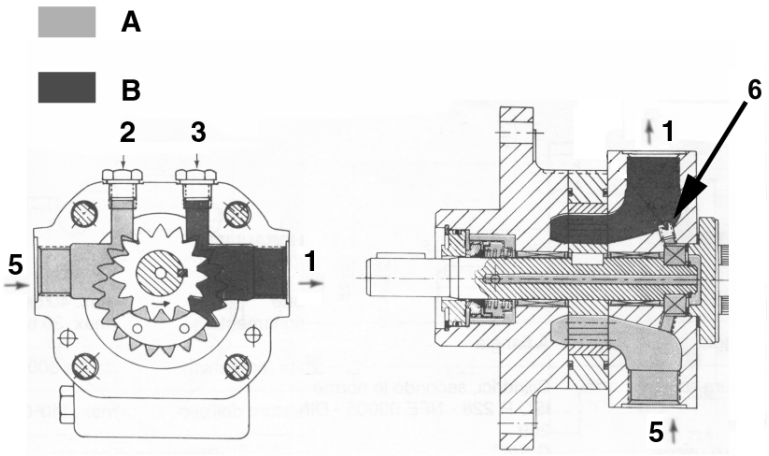

Bleed

Bleeding in two-pipe operation is automatic : it is assured by a bleed flat on the piston. In one-pipe operation, the plug of a pressure gauge port must be loosened until the air is evacuated from the system.

Suntec T pump

Viscosity	4 - 800 cSt
Oil temperature	0 - 140 °C
Minimum suction pressure	- 0,45bar to prevent gasing
Maximum suction pressure	5 bar
Rated speed	3600 rpm max.

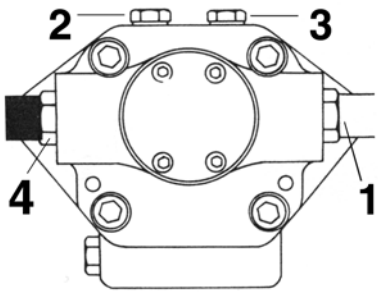

Key

1 To pressure adjusting valve G3/4
2 Pressure/vacuum gauge port to measure the inlet pressure/vacuum G1/4
3 Pressure gauge port G1/4
4 Inlet G3/4

Suntec TV Pressure governor

Pressure adjustment

Remove cap-nut 1 and the gasket 2, unscrew the lock nut 4. To increase pressure, twist adjusting screw 3 clockwise.

To decrease the pressure, twist screw counterclockwise. Tight the lock nut 4, refit the gasket 2 and the cap nut 1.

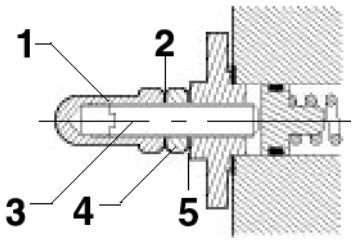

Fig. 3

Key

1 Cap nut
2 Gasket
3 Adjusting screw
4 Lock nut
5 Gasket

Connections to the oil gun

1 Inlet
2 Return
3 Gun opening
4 Heating wire (only for high density oil burners)
5 Cartdrige-type heater (only for Ecoden or high density oil burners)

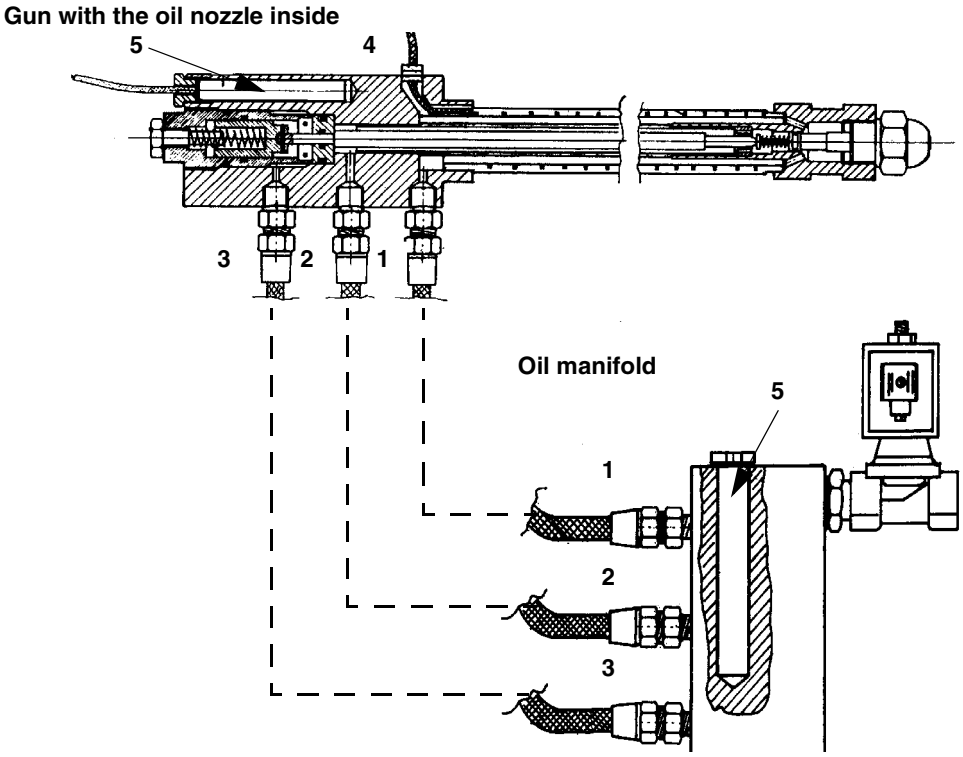

Connecting the burner to the light oil pumping unitConnecting the burner to the oil pumping unit

Follow the scheme in the picture below to connect the burner to the oil pumping unit. The pump sends the oil coming from the tank to the burner. The pressure governor makes the oil reach the nozzle at the required pressure, while the excess of oil goes back to the tank. To change the delivery pressure act on the adjusting screw of the delivery pressure governor.

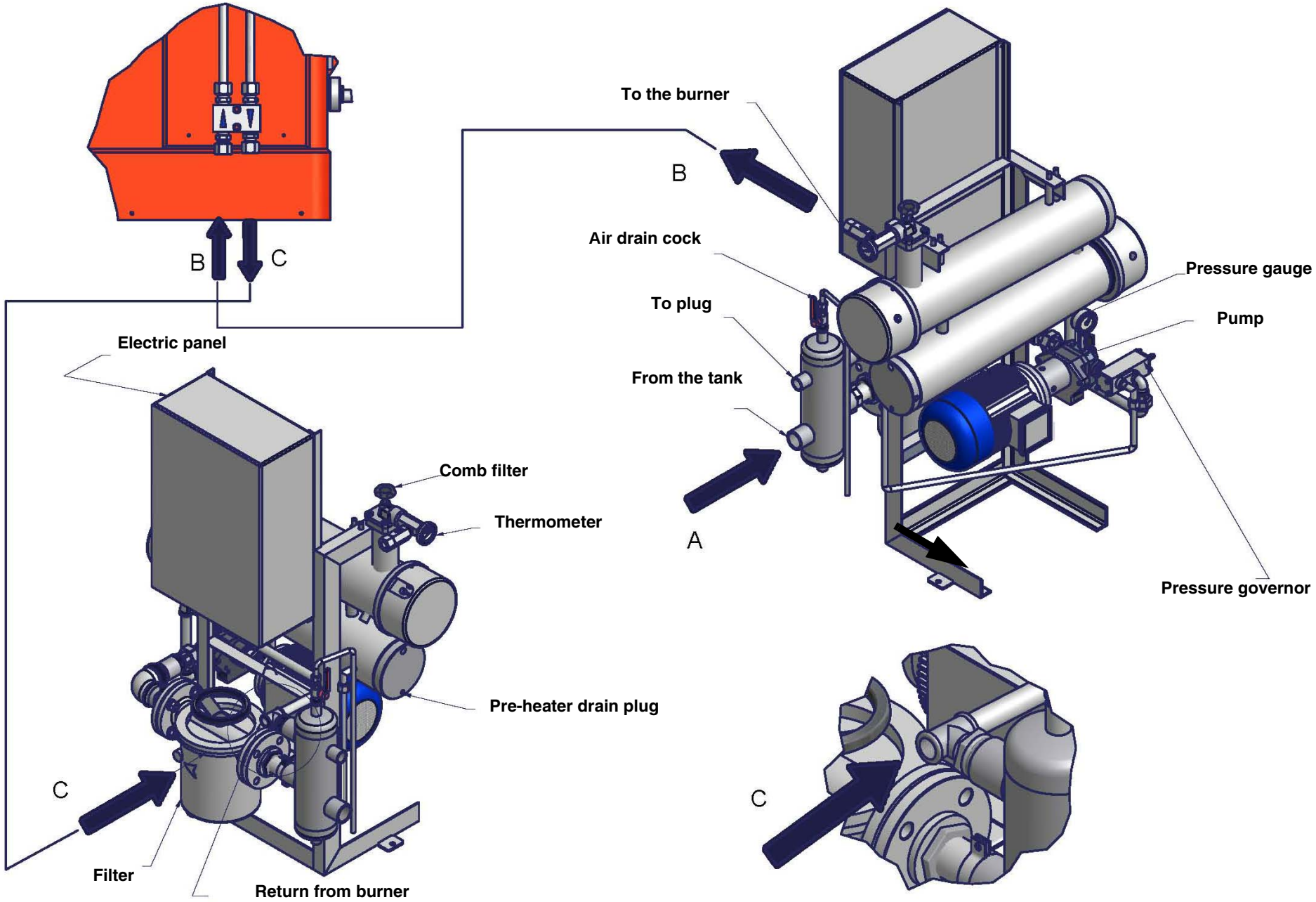

About the use of fuel pumps

- Make sure that the by-pass plug is not used in a single pipe installation, because the fuel unit will not function properly and damage to the pump and burner motor could result.
- Do not use fuel with additives to avoid the possible formation over time of compounds which may deposit between the gear teeth, thus obstructing them.
- After filling the tank, wait before starting the burner. This will give any suspended impurities time to deposit on the bottom of the tank, thus avoiding the possibility that they might be sucked into the pump.
- On initial commissioning a "dry" operation is foreseen for a considerable length of time (for example, when there is a long suction line to bleed). To avoid damages inject some lubrication oil into the vacuum inlet.
- Care must be taken when installing the pump not to force the pump shaft along its axis or laterally to avoid excessive wear on the joint, noise and overloading the gears.
- Pipes should not contain air pockets. Rapid attachment joint should therefore be avoided and threaded or mechanical seal junctions preferred. Junction threads, elbow joints and couplings should be sealed with removable sg component. The number of junctions should be kept to a minimum as they are a possible source of leakage.
- Do not use PTFE tape on the suction and return line pipes to avoid the possibility that particles enter circulation. These could deposit on the pump filter or the nozzle, reducing efficiency. Always use O-Rings or mechanical seal (copper or aluminium gaskets) junctions if possible.
- An external filter should always be installed in the suction line upstream of the fuel unit.

Electrical connections

⚠	**RESPECT THE BASIC SAFETY RULES. MAKE SURE OF THE CONNECTION TO THE EARTHING SYSTEM. DO NOT REVERSE THE PHASE AND NEUTRAL CONNECTIONS. FIT A DIFFERENTIAL THERMAL MAGNET SWITCH ADEQUATE FOR CONNECTION TO THE MAINS. STRICTLY OBSERVE THE DATA PLATE.**

As far as electrical connections, see the “ELECTRICAL WIRING DIAGRAMS” chapter.

Once the burner electrical connection is accomplished, remember to check the rotation of the motors.

Motors must rotate in the direction showed on their casing. In the event of wrong rotation, reverse the three-phase supply and check again the motor rotation.

Rotation of fan motor and pump motor

Once the electrical connection of the burner is executed, remember to check the rotation of the motors. The motor should rotate according to the indication on the body. In the event of wrong rotation, reverse the three-phase supply and check again the rotation of the motor.

Connecting the oil heating resistors

18 - 24 kW

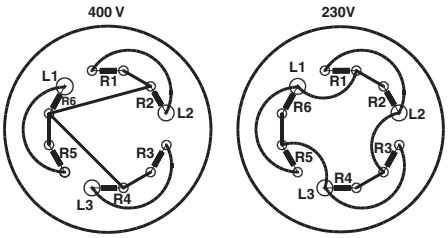

PUMP MOTOR CONNECTION

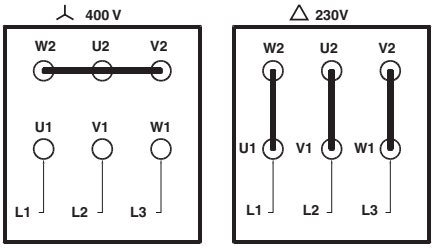

Connecting the fan motor

In case of star-delta start-up, connect all the 6 wires, according to the sequence shown in the “Electrical wiring diagrams” chapter. If the start-up is performes by means of inverter, follow the instructions on the related manual.

Guidelines for the appropriate use of heavy oil

For a correct operation of heavy oil or dual fuel burners (gas - heavy oil), the supply plant must be correctly build and it must ensure two fundamental conditions:

- CONSTANT PRESSURE
- CONSTANT TEMPERATURE

Here below we explain why it is essential to heat the oil and keep it under pressure.

Consider, as an example, a fuel oil with the following properties:

- Fuel oil BTZ (low sulphur rate)
- Viscosity from 3 to 5 °E at 50 °C

Such a fuel (see curve n. 3 in Fig. 4), at a temperature of 20° C, changes its viscosity from 3 - 5 °E to 15-20 °E and, at 10° C the viscosity exceeds 40° E.

In such conditions, obviously, the fuel couldn't be carried from the tank to the burner.

Once the oil has been heated, it can't be sucked by the burner pump, unless you keep it in pressure. In fact, as per drawing in Fig. 6, the pump manufacturer states that the minimum feeding pressure must be 1 bar at 40 °C temperature.

Should you try to suck the heated oil directly from the tank, you could get cavitation. The burner pump would constantly loose pressure as long as you heat the fuel. In this way you bring the nozzle pressure to values different from the one stated by the nozzle manufacturer. In such way the atomization would result incorrect.

From the diagram in Fig. 5, you get the pre-heating temperature of the oil according to viscosity and, from diagram in Fig. 6, you get the pump feeding pressure according to temperature.

Therefore, it is necessary in order to set up a suitable oil circuit, look at the diagrams in Fig. 8 and Fig. 9, taken from UNI 9248 "FEEDING LINES FOR LIQUID FUELS TRANSPORT FROM TANK TO BURNER".

In any case, whatever is the choosen solution to realise the oil circuit, you must act according to what is mentioned here above (constant pressure and constant temperature).

After setting up the feeding circuit, you have to decide the temperature and pressure values to be set up in the components of the feeding pipeline and of the burner.

Please find here below, a set up table regarding several types of fuels.

FUEL	VISCOSITY AT 50 °C		PIPELINE PRESSURE	PIPELINE TEMPERATURE*	PUMP SUPPLY TEMPERATURE (DIAGRAM IN Fig. 12)
	°E		bar	°C	°C
Fluid BTZ (ecoflu)	3	7	1- 2	20	30
High viscosity BTZ (Ecoden)	7	15	1- 2	50	50
High viscosity	15	50	1- 2	65	80

Tab. 1 - Supply pipeline

FUEL	VISCOSITY AT 50 °C		NOZZLE PRESSURE MEASURED IN THE GUN	RETURN NOZZLE PRESSURE		TEMPERATURE ON THE PRE-HEATING RESISTORS THERMOSTAT TR*		TEMPERATURE OF THE RESISTORS SAFETY THERMOSTAT TRS	TEMPERATURE ON THE OIL ENABLING THERMOSTAT TCN	TEMPERATURE ON THE PLANT ENABLING THERMOSTAT TCI
				min.	max.	min.	max.			
	°E		bar	bar		°C		°C	°C	°C
Fluid BTZ (ecoflu)	3	7	25	7-97	20	100	115	170	80	50 - 60
High viscosity BTZ (Ecoden)	7	15	25	7-9	20	125	140	190	100	60 - 80
High viscosity	15	50	25	7-9	20	145	160	190	110	70 - 90

Tab. 2 - Burner

* The temperature in the pre-heater must be set to get a viscosity in the nozzle from 1.4 to 1.6 °E.

VISCOSITY UNITS CONVERSION TABLE						
Cinematics Engler (Degrees) °E	**Cinematics (Centistokes) cSt**	**Cinematics (Centipoises) cps**	**Saybolt Universal (Seconds) S.S.U.**	**Saybolt Furol (Seconds) S.S.F.**	**Redwood n. 1 (Seconds) R.S.I**	**Redwood n. 2 (Seconds) R.S.II**
2.95	20.60	20.60	100		88.4	
3.21	23.00	23.00	110		97.1	
3.49	25.3	25.3	120		105.9	
3.77	27.5	27.5	130		114.8	
4.04	29.8	29.8	140		123.6	
4.32	32.1	32.1	150		132.4	
4.59	34.3	34.3	160		141.1	
4.88	36.5	36.5	170		150.0	
5.15	38.7	38.7	180		158.8	
5.44	41.0	41.0	190		167.5	
5.72	43.2	43.2	200	23	176.4	
6.28	47.5	47.5	220	25.3	194.0	
6.85	51.9	51.9	240	27.0	212	
7.38	56.2	56.2	260	28.7	229	
7.95	60.6	60.6	280	30.5	247	
8.51	64.9	64.9	300	32.5	265	
9.24	70.4	70.4	325	35.0	287	
9.95	75.8	75.8	350	37.2	309	
10.7	81.2	81.2	375	39.5	331	
11.4	86.6	86.6	400	42.0	353	
12.1	92.0	92.0	425	44.2	375	
12.8	97.4	97.4	450	47.0	397	
13.5	102.8	102.8	475	49	419	
14.2	108.2	108.2	500	51	441	
15.6	119.2	119.2	550	56	485	
17.0	120.9	120.9	600	61	529	
18.5	140.7	140.7	650	66	573	
19.9	151.3	151.3	700	71	617	
21.3	162.3	162.3	750	76	661	
22.7	173.2	173.2	800	81	705	
24.2	184.0	184.0	850	86	749	
25.6	194.8	194.8	900	91	793	
27.0	206	206	950	96	837	
28.4	216	216	1000	100	882	
34.1	260	260	1200	212	1058	104
39.8	303	303	1400	141	1234	122
45.5	346	346	1600	160	1411	138
51	390	390	1800	180	1587	153
57	433	433	2000	200	1703	170
71	541	541	2500	250	2204	215
85	650	650	3000	300	2646	255
99	758	758	3500	350	3087	300

Tab. 3

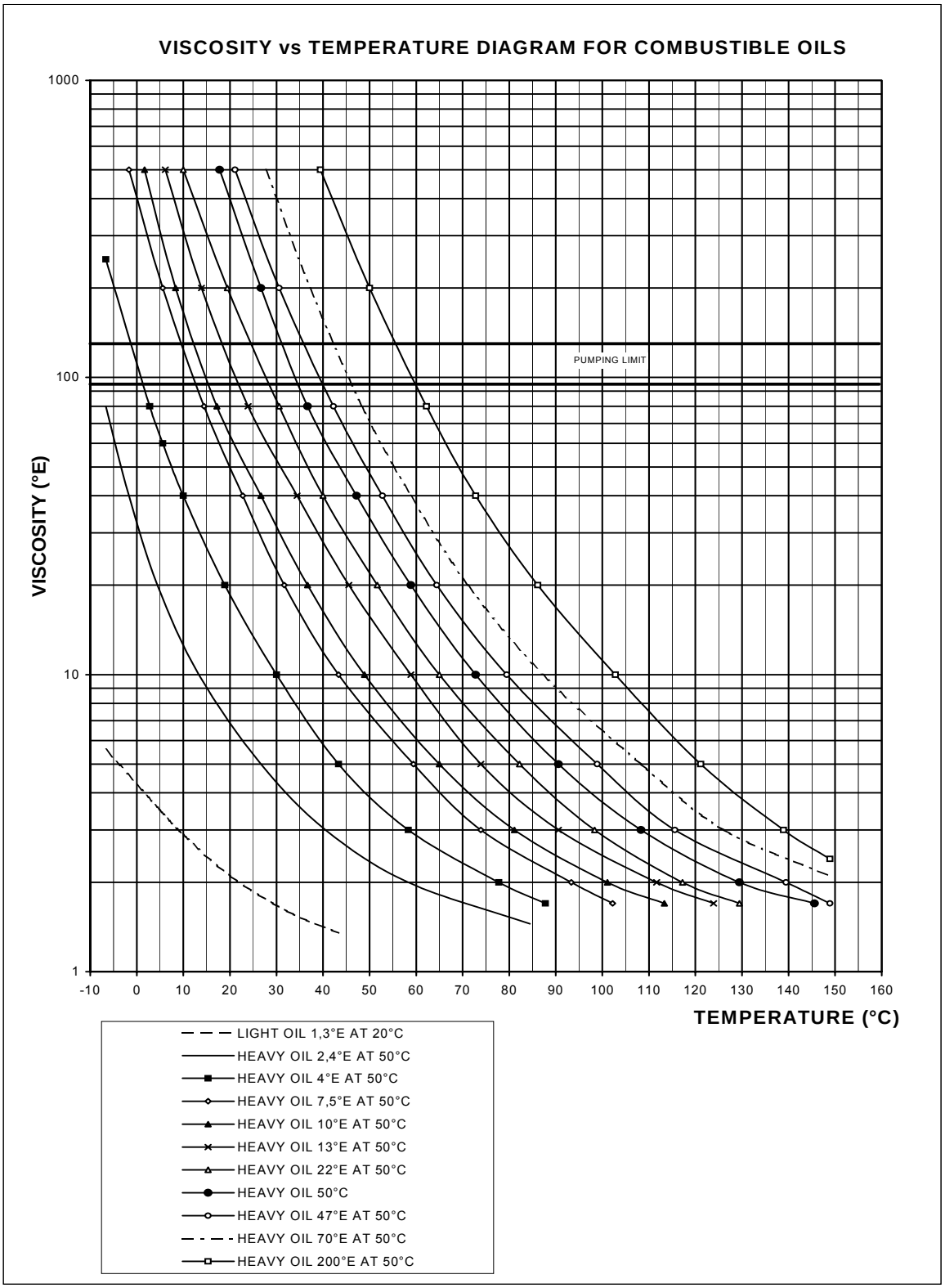

Fig. 4

The burners must be feeded with fuel with a minimum temperature at the pump inlet, as a function of the oil viscosity, as showed ondiagrmas in Fig. 4, Fig. 5 and Fig. 7.

Minimum feeding temperature vs. oil viscosity

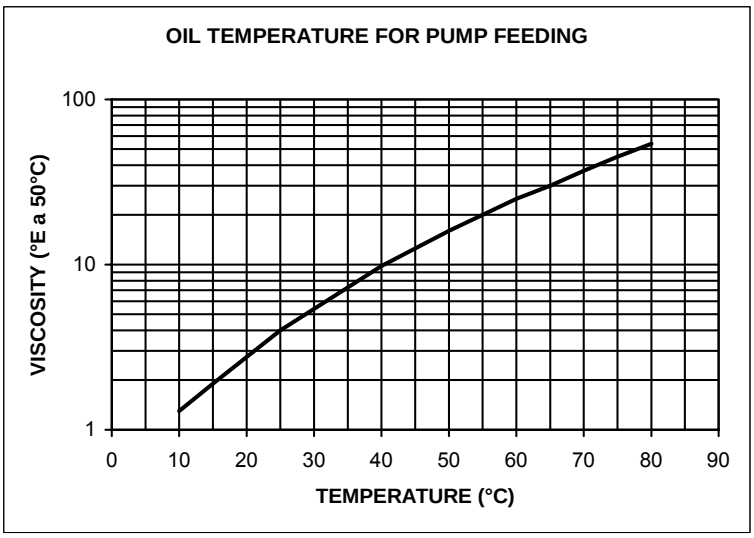

Fig. 5

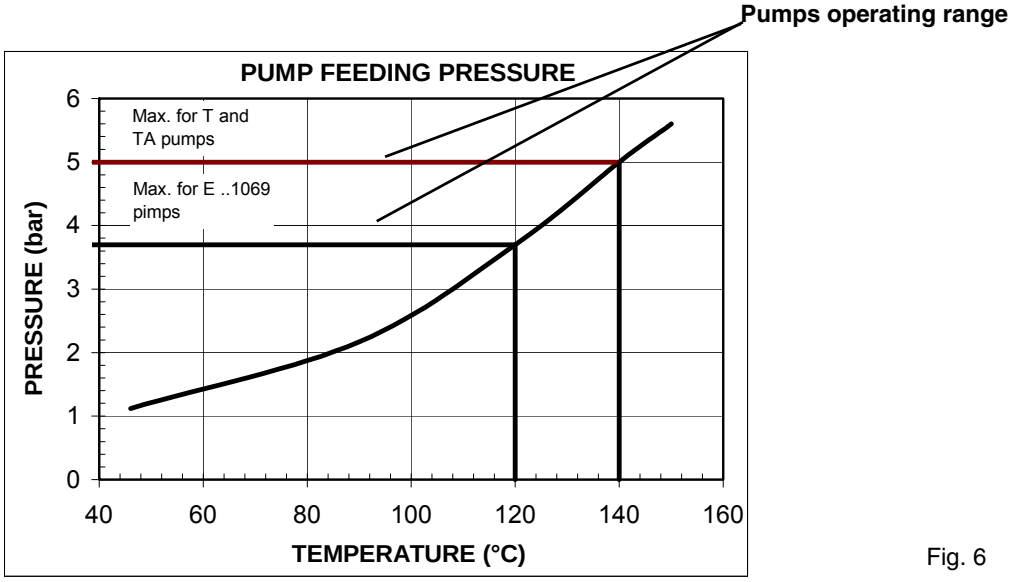

Fig. 6

The use of heavy oil forces to feed the burner to a pressure strictly related to the oil temperature. This avoids damage to the pump caused by gassification.

VISCOSITY vs. TEMPERATURE DIAGRAM

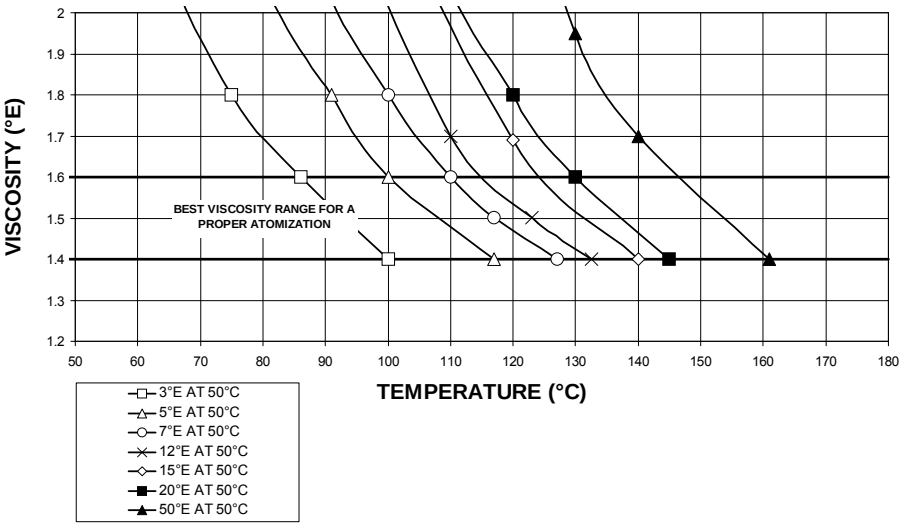

Fig. 7

HYDRAULIC DIAGRAMS

Fig. 8 - **Hydraulic diagram 3ID0023 - Single burner configuration**

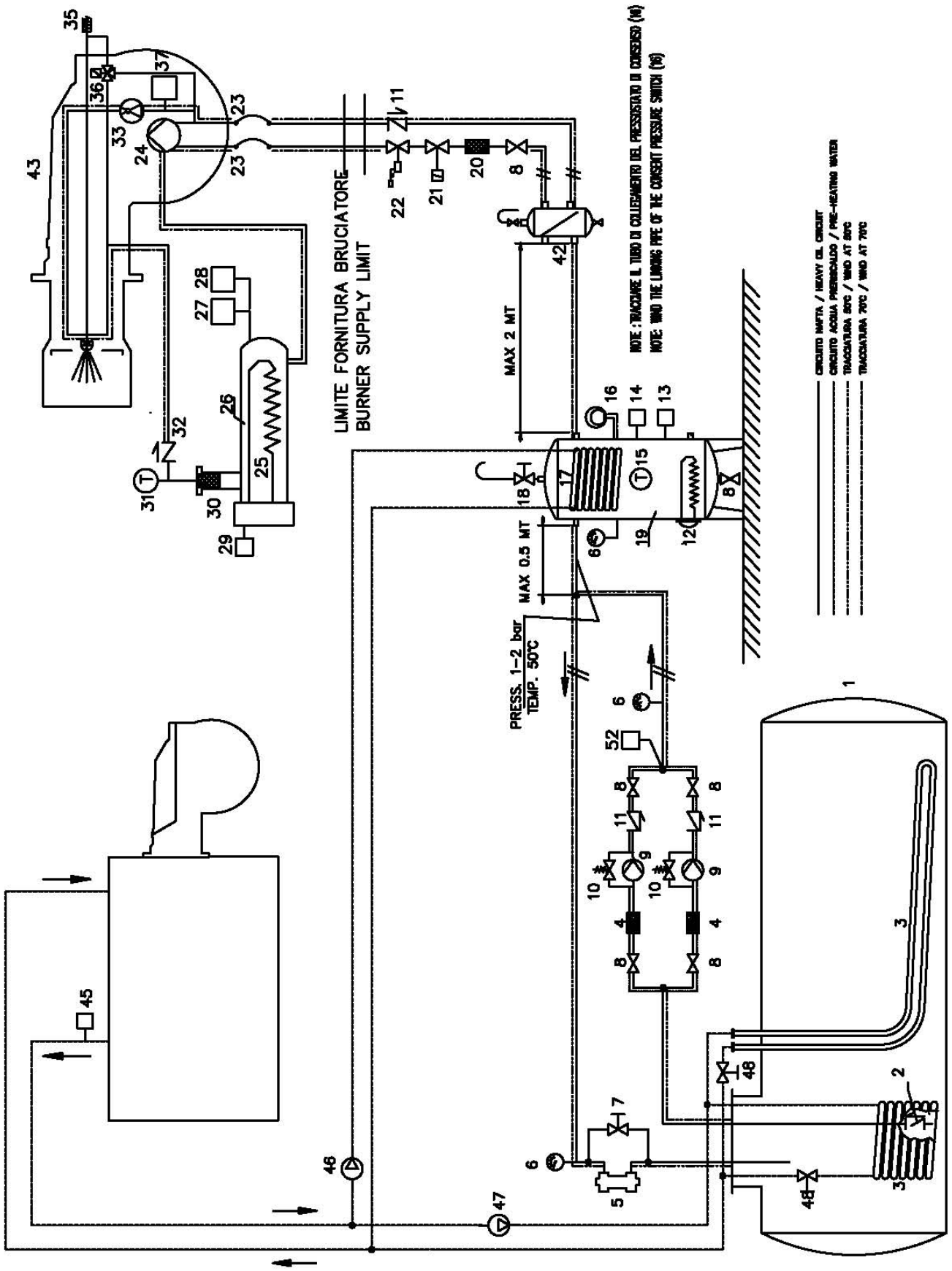

Fig. 9 - **Hydraulic diagram 3ID0014 - Two or more burners configuration**

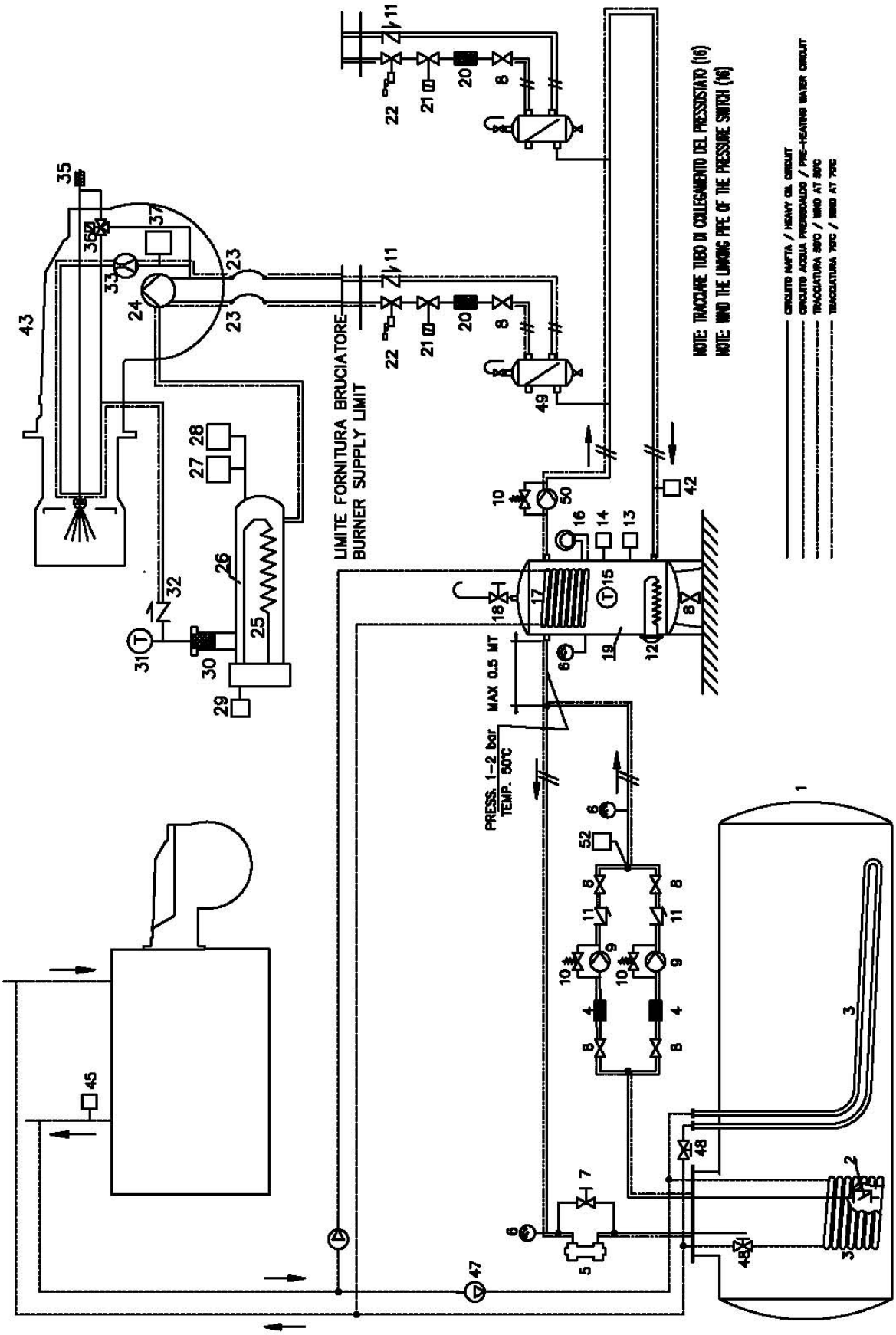

-

Hydraulic Diagram 3ID0014

1 Main tank
2 Bottom valve
3 Main tank pre-heating pipe
4 Oil filter (filtration, 1mm)
5 Circuit pressure regulator
6 Manometer
7 Pressure regulation by-pass valve
8 Manual valve
9 Oil pump
10 Pump pressure regulator
11 Unidirectional valve
12 Service tank pre-heating resistor
13 Service tank pre-heating thermostat
14 Burner consent thermostat
15 Thermometer
16 Consent pressure switch for service tank resistor
17 Service tank heating pipe
18 Service tank air drain valve
19 Service tank
20 Oil filter
21 Fuel solenoid valve
22 Fuel valve
23 Burner pump flexible hoses
24 Burner oil pump
25 Pre-heating tank resistor
26 Pre heating tank
27 Oil consent thermostat
28 Heather safety thermostat
29 Thermostat for oil temperature setting
30 Tank filter
31 Thermometer
32 Check valve
35 Oil needle drive piston
36 Oil rate regulator
37 Burner consent thermostat
42 Burner start consent thermostat
43 Burner
45 Thermostat for pipes pre-heating pumps
46 Water pump for service tank pre-heating (1)
47 Water pump for main tank pre-heating (19)
48 Water pre-heating balance setting valve
50 Oil circulation pump
52 Oil ring max. pressure switch

Hydraulic Diagram 3ID0023

1 Main tank
2 Bottom valve
3 Main tank pre-heating pipe
4 Oil filter
5 Circuit pressure regulator
6 Manometer
7 Pressure regulation by-pass valve
8 Manual valve
9 Oil pump
10 Pump pressure regulator
11 Unidirectional valve
12 Service tank pre-heating resistor
13 Service tank pre-heating thermostat
14 Burner consent thermostat
15 Thermometer
16 Consent pressure switch for service tank resistor
17 Service tank heating pipe
18 Service tank air drain valve
19 Service tank
20 Oil filter
21 Fuel solenoid valve
22 Fuel valve
23 Burner pump flexible hoses
24 Burner oil pump
25 Pre-heating tank resistor
26 Pre heating tank
27 Oil consent thermostat
28 Pre-heating tank resistors safety thermostat
29 Thermostat for oil temperature setting
30 Pre-heating tank filter
31 Thermometer
32 Check valve
33 Return pressure regulator
35 Oil needle drive piston
36 Three way valve for piston drive
37 Burner consent thermostat
42 Air separation bottle
43 Burner
45 Thermostat for pipes pre-heating pumps
46 Water pump for service tank pre-heating (1)
47 Water pump for main tank pre-heating (19)
48 Valves for setting of pre-heating water balance
52 Oil ring max. pressure switch

OIL NOZZLES

The light oil flow rate can be adjusted choosing a by-pass nozzle that suits the boiler/utilisation output and setting the delivery and return pressure values according to the ones quoted on the chart below and the diagram s (as far as reading the pressure values, see next paragraphs).

NOZZLE	NOZZLE SUPPLY PRESSURE bar	HIGH FLAME RETURN PRESSURE bar	LOW FLAME RETURN PRESSURE bar
FLUIDICS WR2	25	20	7 (recommended)
BERGONZO B	25	20	7 (recommended)
BERGONZO C	25	20	7 (recommended)

- **FLUIDICS nozzles**

	FLOW RATE kg/h	
DIMENSIONS	**Min**	**Max**
40	13	40
50	16	50
60	20	60
70	23	70
80	26	80
90	30	90
100	33	100
115	38	115
130	43	130
145	48	145
160	53	160
180	59	180
200	66	200
225	74	225
250	82	250
275	91	275
300	99	300
330	109	330
360	119	360
400	132	400
450	148	450
500	165	500
550	181	550
600	198	600
650	214	650
700	231	700
750	250	750
800	267	800

Tab. 4

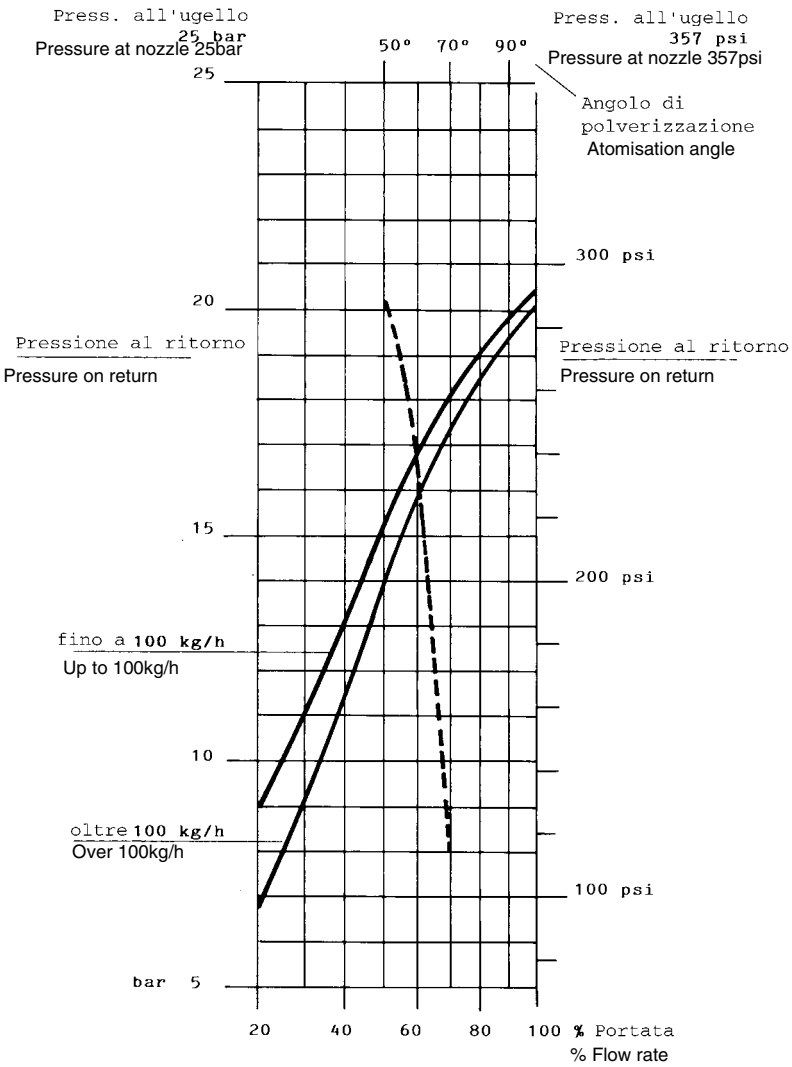

Fig. 10

----------Atomisation angle according to the return pressure

_____ % Flow rate

Example: as for over 100kg/h nozzles, the 80% of the nozzle flow rate can be obtained with a return pressure at about 18bar (see Fig. 10).

- **BERGONZO NOZZLES**

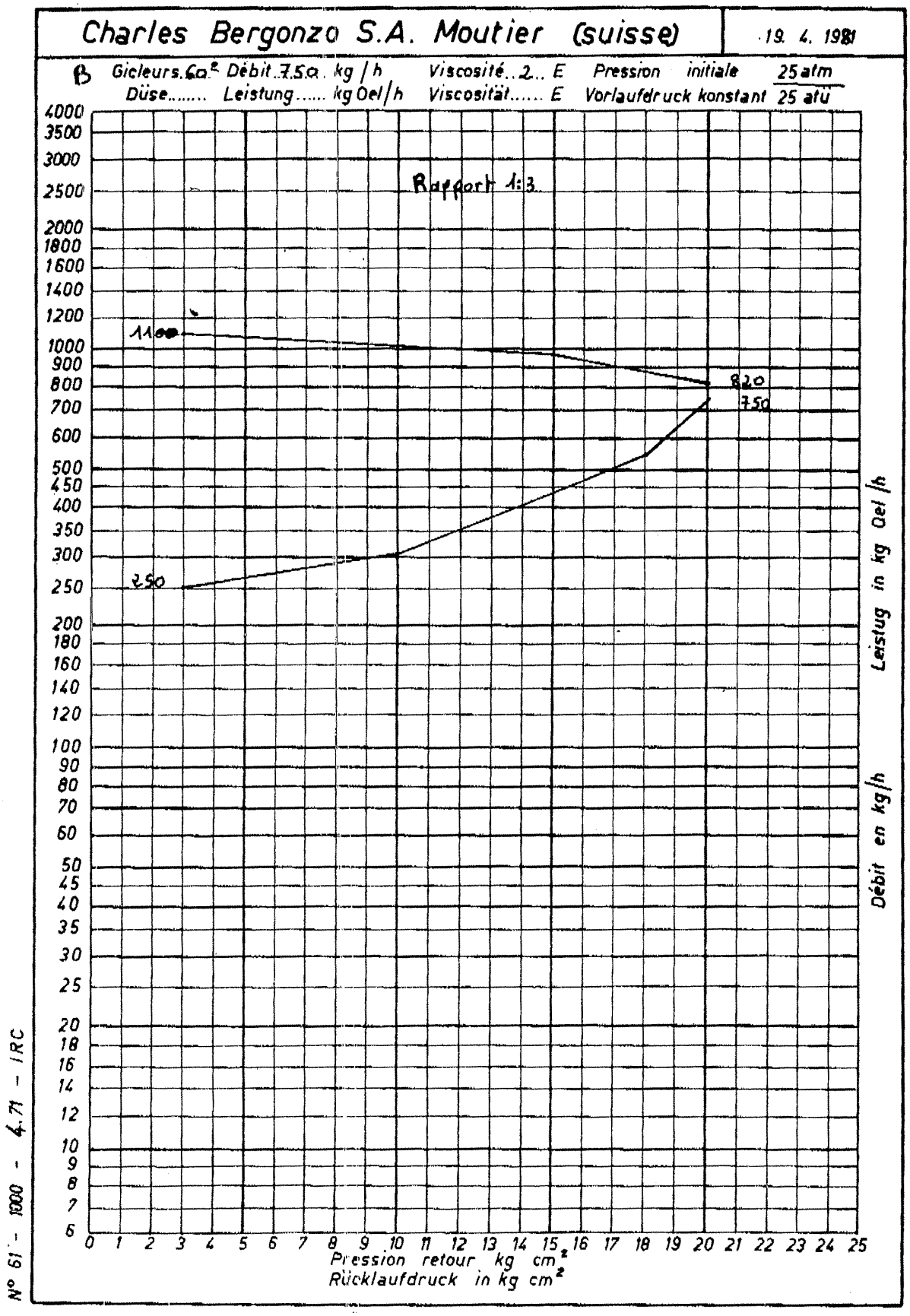

Fig. 11

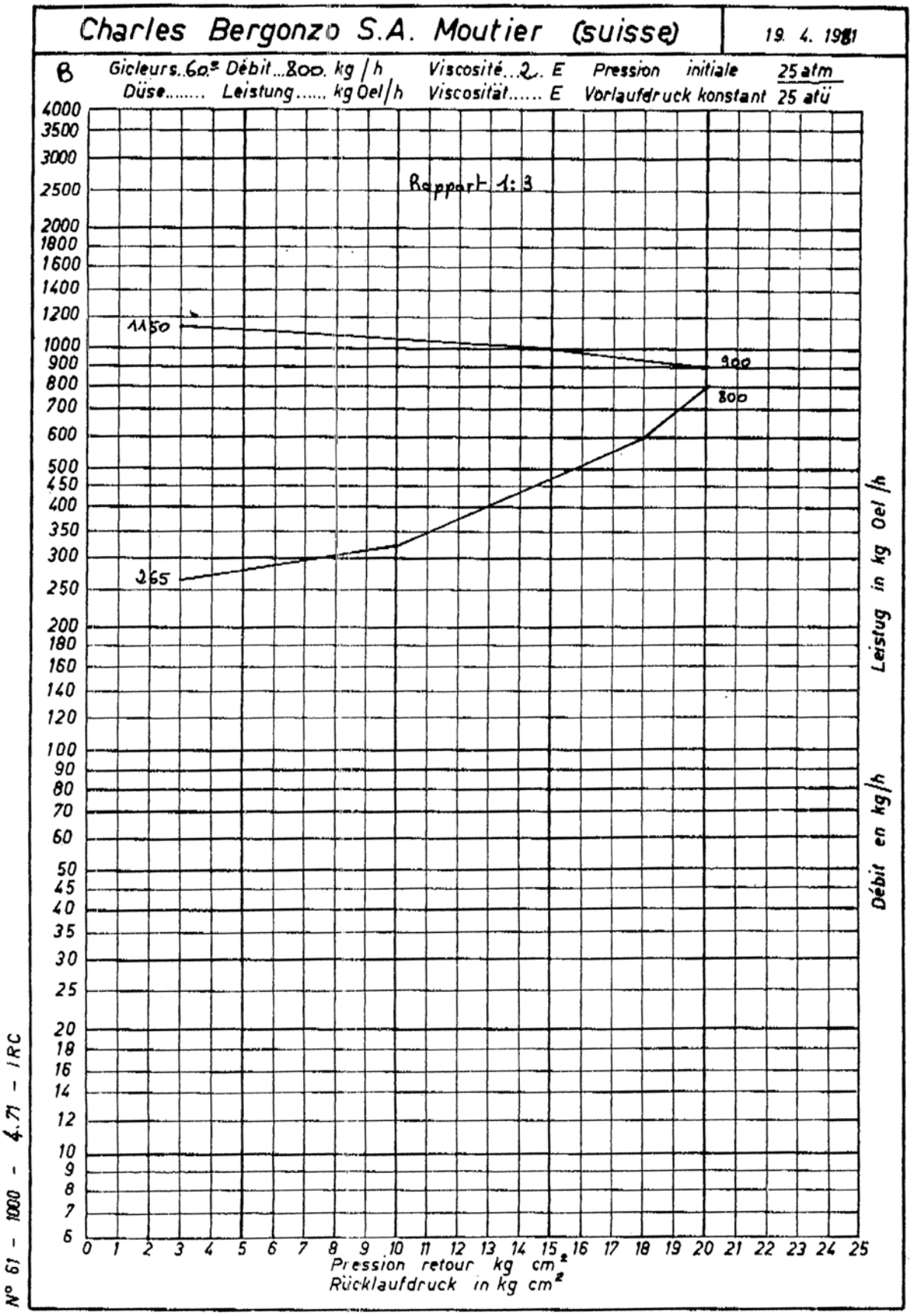
Charles Bergonzo S.A. Moutier (suisse)
19. 4. 1981
B
Gicleurs..60.ᵉ Débit...800. kg / h
Viscosité...2.. E
Pression initiale 25 atm
Düse..... Leistung..... kg Oel/h
Viscosität..... E
Vorlaufdruck konstant 25 atü
Rapport 1:3
1150
900
800
265
Leistug in kg Oel /h
Débit en kg/h
Pression retour kg cm²
Rücklaufdruck in kg cm²
N° 61 - 1000 - 4.71 - IRC

Fig. 12

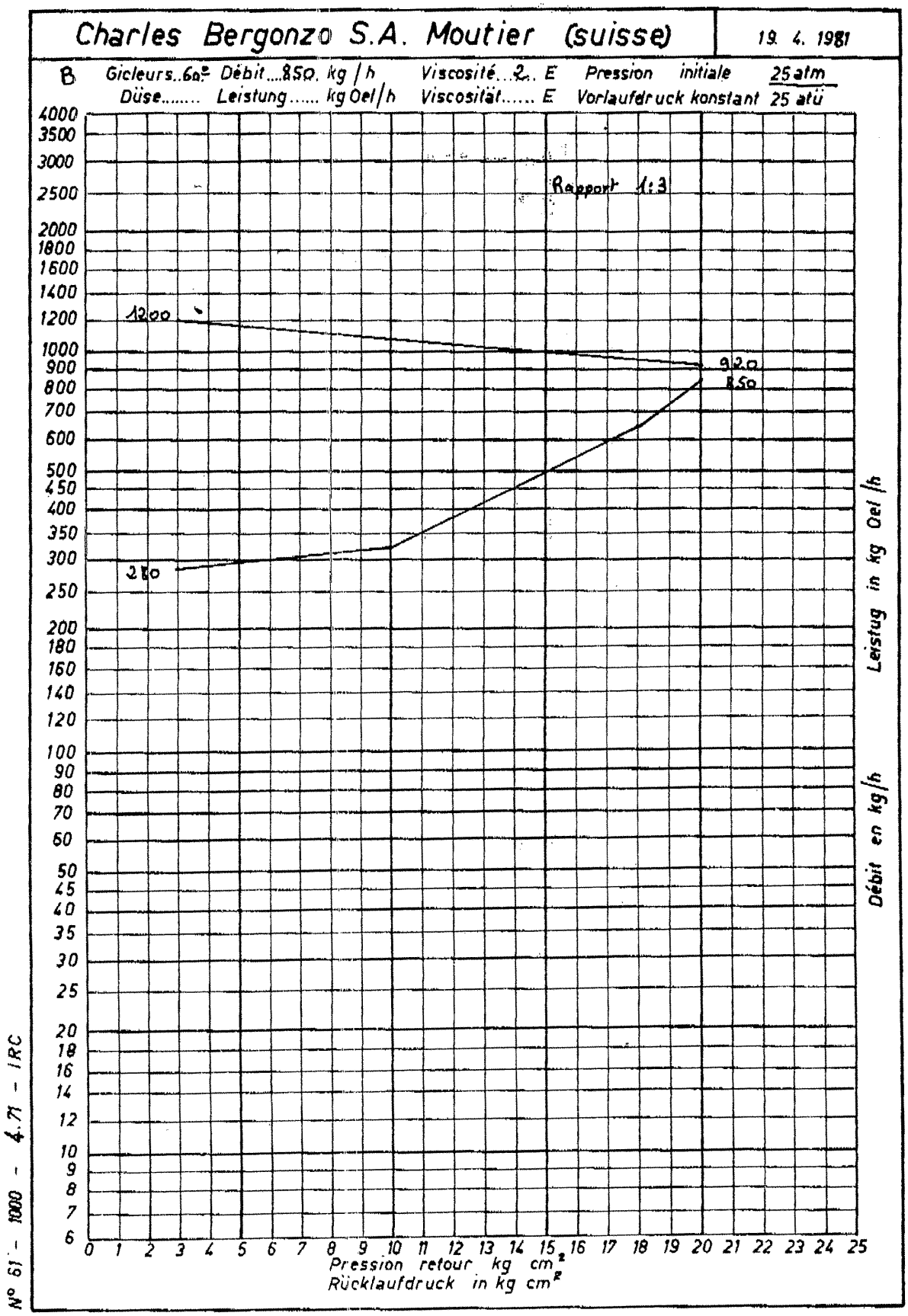
Charles Bergonzo S.A. Moutier (suisse)
19. 4. 1981
B
Gicleurs..60° Débit....850. kg/h Viscosité...2.. E Pression initiale 25 atm
Düse..... Leistung..... kg Oel/h Viscosität..... E Vorlaufdruck konstant 25 atü
Rapport 1:3
1200
920
850
280
Leistug in kg Oel/h
Débit en kg/h
Pression retour kg cm²
Rücklaufdruck in kg cm²
N° 61 - 1000 - 4.71 - IRC

Fig. 13

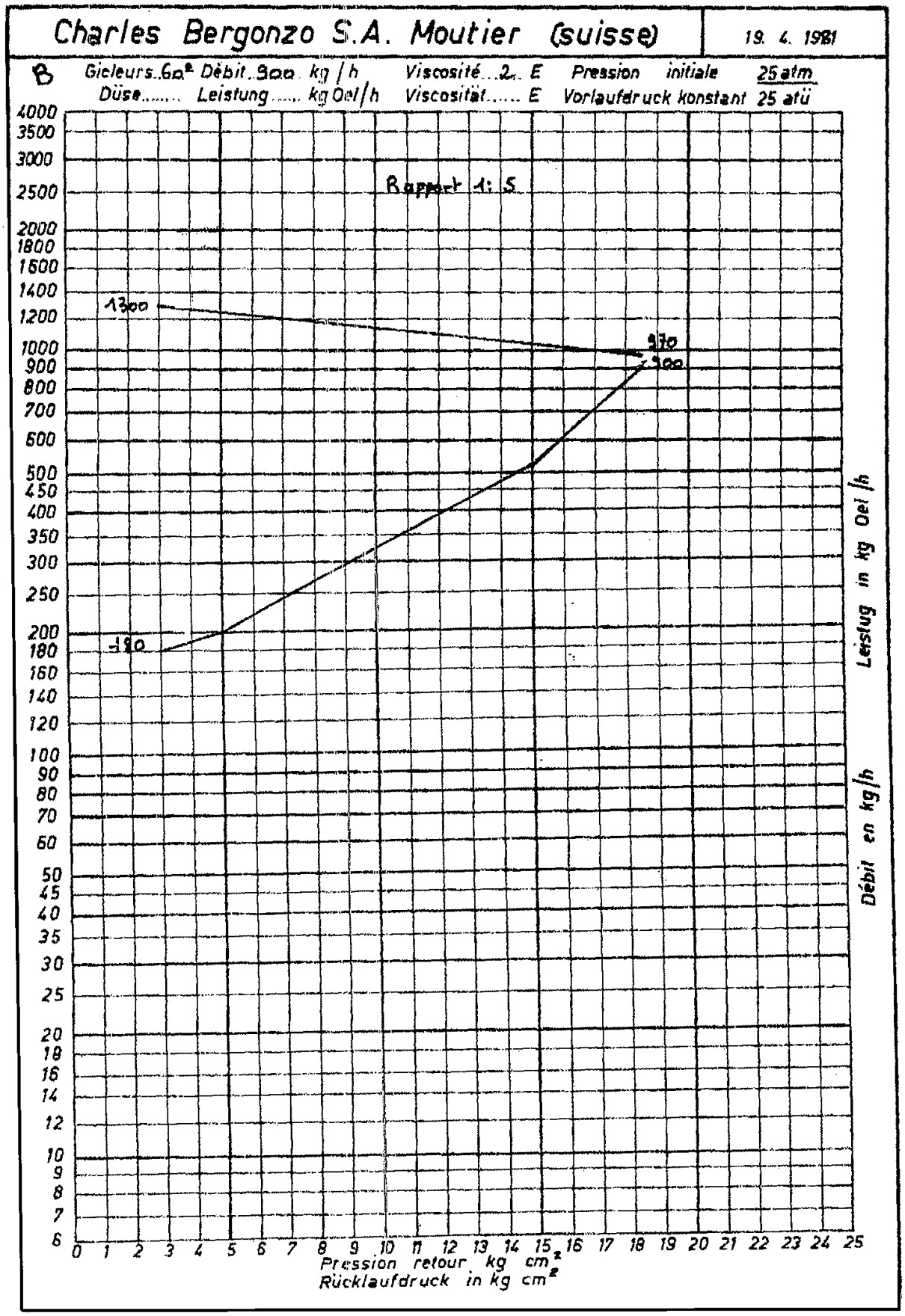
Charles Bergonzo S.A. Moutier (suisse)
19. 4. 1981
B
Gicleurs 60° Débit 900 kg/h
Viscosité 2 E
Pression initiale 25 atm
Düse..... Leistung..... kg Oel/h
Viscosität..... E
Vorlaufdruck konstant 25 atü
Rapport 1:5
1300
970
900
180
Leistug in kg Oel/h
Débit en kg/h
Pression retour kg cm²
Rücklaufdruck in kg cm²

Fig. 14

Oil thermostat adjustment

To find the thermostats, remove the cover of the burner switchboard. Adjust them using a screwdriver on the VR screw as shown in the next picture.

NOTE: thermostat **TCI** is provided on burners fired with fuel oil having a 50° E at 50° C viscosity only.

TCN - Oil enabling thermostat (Fig. 15)

Adjust this thermostat to a value 10% lower than that showed in the viscosity-temperature diagram (Fig. 4).

TRS - Resistor safety thermostat (Fig. 15)

The thermostat is set during factory testing at about 190° C.

This thermostat trips when the operating temperature exceeds the set limit. Ascertain the cause of the malfunction and reset the thermostat by means of the PR button.

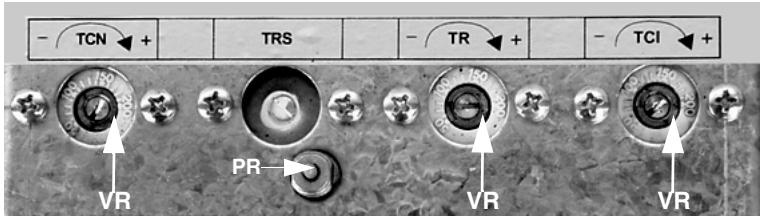

Fig. 15

TR - Resistor thermostat (Fig. 15)

Adjust this thermostat to the correct value according to the viscosity-temperature diagram (Fig. 4) and check the temperature by using a thermometer with a scale of up to 200° C mounted on the pre-heating tank.

TCI - Installation enabling thermostat (Fig. 15)

This thermostat is fitted on burners fired with oil at a viscosity of 50° E at 50° C only. Set the thermostat to a temperature about 40° C lower than the TR.

ADJUSTMENTS

⚠	***ATTENTION:*** **before starting the burner up, be sure that the manual cutoff valves are open and check that the pressure upstream the gas train complies the value quoted on paragraph "Technical specifications". Be sure that the mains switch is closed.**
	Before starting up the burner, make sure that the return pipe to the tank is not obstructed. Any obstruction would cause the pump seal to break.
	.***ATTENTION:*** During commissioning operations, do not let the burner operate with insufficient air flow (danger of formation of carbon monoxide); if this should happen, make the gas decrease slowly until the normal combustion values are achieved.

⚠	**IMPORTANT! the combustion air excess must be adjusted according to the in the following chart:**

Recommended combustion parameters		
Fuel	***Recommended (%) CO_2***	***Recommended (%) O_2***
Heavy oil <=7°E a 50 °C	11 ÷ 12	4.2 ÷ 6.2
Heavy oil >=7°E a 50 °C	11 ÷ 12.5	4.7 ÷ 6.7

Adjusting the gas ignitor

To change the pilot gas valve flow rate, proceed as follows:

1 remove the protection on the bottom of the valve, moving it counterclockwise (see next figure);

2 rotate clockwise the nut 1 as shown in to close the valve or counterclockwise to open.

To perform a finest adjustment, act directly on the pressure stabiliser as follows (see next figure):

3 remove the cap **T**: to increase the gas pressure at the outlet use a screwdriver on the screw **TR** as shown in the next picture. Screw to increase the pressure, unscrew to decrease; once the regulation is performed, replace cap **T**.

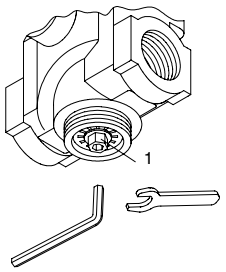

Brahma gas valve EGR*12

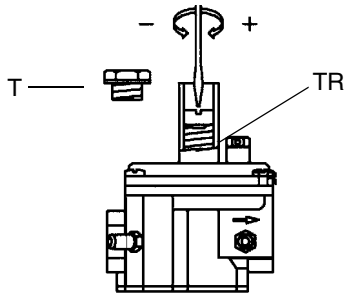

Pressure stabiliser

Adjustments - brief description

Adjust the air and fuel flow rates at the maximum output ("high flame") first, by means of the air damper and the adjusting cam respectively.

- Check that the combustion parameters are in the suggested limits.
- Check the nozzle flow rate.
- Then, adjust the combustion values corresponding to the points between maximum and minimum: set the shape of the adjusting cam foil. The adjusting cam sets the air/fuel ratio in those points, regulating the opening-closing of the fuel governor.
- Set, now, the low flame output, acting on the low flame microswitch of the actuator in order to avoid the low flame output increasing too much or that the flues temperature gets too low to cause condensation in the chimney.

Adjustment procedure

1 Check the fan motor rotation.

2 With the electrical panel open, prime the oil pump acting directly on the related **CP** contactor (see next picture): check the pump motor rotation and keep pressed for some seconds until the oil circuit is charged;

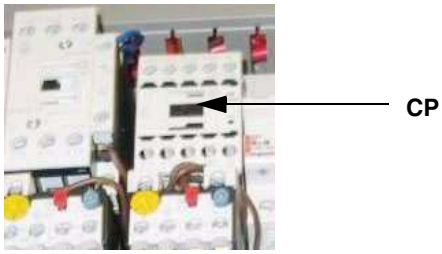

3 bleed the air from the **M** pressure gauge port (Fig. 16) by loosing the cap without removing it, then release the contactor.

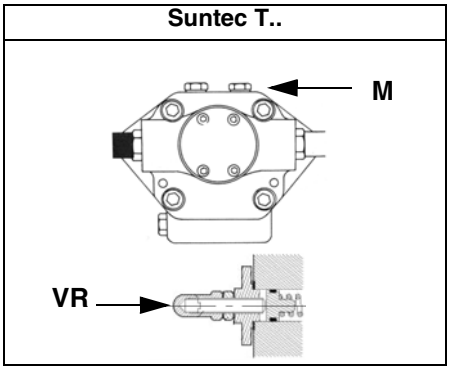

Fig. 16

1 Before starting the burner up, drive the high flame actuator microswitch matching the low flame one (in order to let the burner operates at the lowest output) to achieve safely the high flame stage;

2 cam IV (stroke limitation cam) must be set a little higher than the cam III to limit the output during the first seconds the flame appears;

NOTE: cam IV must shift according to cam III.

3 Turn the burner on by means of its main switch: if the burner locks press the RESET button on the control panel - see chapter "OPERATION" on page 25.

4 start the burner up by means of the thermostat series and wait until the pre-purge time comes to an end and the burner starts up;

5 drive the burner to high flame stage, by means fo the thermostat **TAB**.

6 Then move progressively the microswitch to higher values until it reaches the high flame position; always check the combustion values and eventually adjust the oil pressure (see next step).

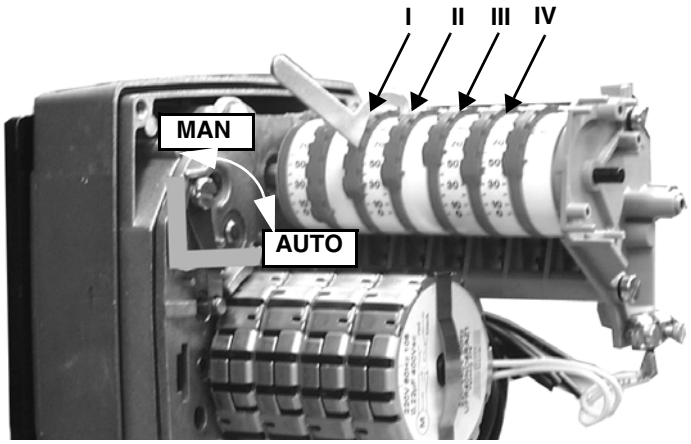

Actuator cams

I	High flame
II	Stand-by and Ignition
III	Low flame
IV	Stroke limitation

7 The nozzle supply pressure is already factory-set and must not be changed. Only if necessary, adjust the supply pressure as follows (see related paragraph);insert a pressure gauge into the port showed on Fig. 17 and act on on the pump adjusting screw **VR** (see Fig. 16 and page 11) as to get the nozzle pressure at 25bar (Fluidics/Bergonzo nozzles - see diagram on page 22).

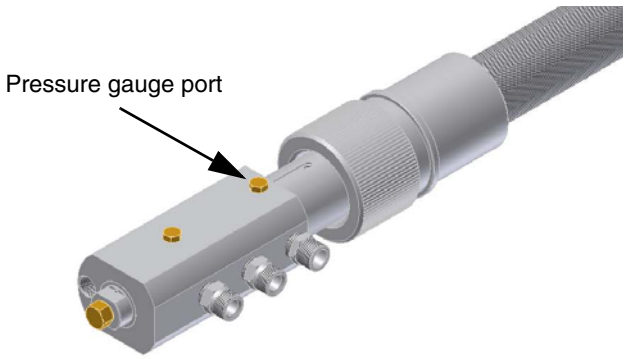

Fig. 17

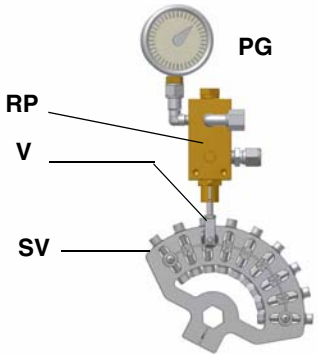

Fig. 18

8 In order to get the maximum oil flow rate, adjust the pressure (reading its value on the **PG** pressure gauge (see picture above): always checking the combustion parameters, the adjustment is to be performed by means of the **SV** adjusting cam screw (see picture above) when the cam has reached the high flame position.

9 To adjust the **air flow rate in the high flame stage**, loose the **RA** nut and screw **VRA** as to get the desired air flow rate: moving the rod **TR** towards the air damper shaft, the air damper opens and consequently the air flow rate increases, moving it far from the shaft the air damper closes and the air flow rate decreases.

Note: once the procedure is perfomed, be sure that the blocking nut **RA** is fasten. Do not change the position of the air damper rods.

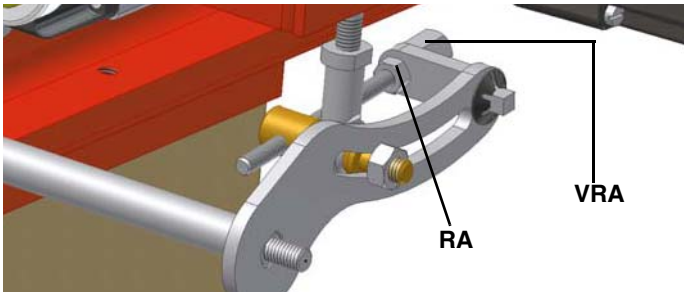

10 Only if necessary, change the combusiton head position: to let the burner operate at a lower output, loose the **VB** screw and move progressively back the combustion head towards the MIN position, by turning clockwise the **VRT** ring nut. Fasten **VB** screw when the adjustment is accomplished.

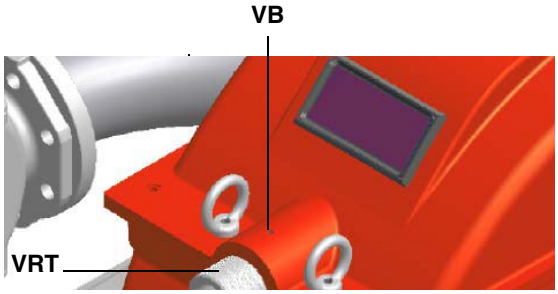

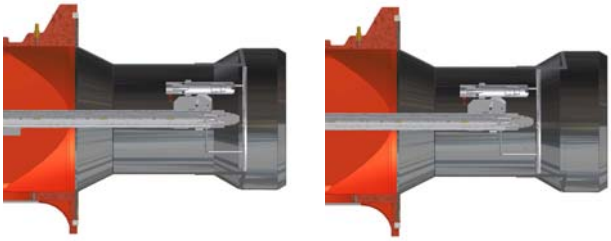

"MAX"head position "MIN" head position

Attention! if it is necessary to change the head position, repeat the air and gas adjustments described above.

11 the air and oil rate are now adjusted at the maximum output stage, go on with the point to point adjustement on the **SV** (Fig. 18) adjusting cam as to reach the minimum output point.

12 As for the point-to-point regulation in order to set the cam foil shape, move the low flame microswitch (cam III) a little lower than the maximum position (90°);

13 set the **TAB** thermostat to the minimum in order that the actuator moves progressively towards the low flame position;

14 move cam III (low flame) towards the minimum to move the actuator towards the low flame until the two bearings find the adjusting screw that refers to a lower position: screw **V** to increase the rate, unscrew to decrease, in order to get the pressure as showed on diagrams on page 16, according to the nozzle provided and the requested rate.

15 Move again cam III towards the minimum to meet the next screw on the adjusting cam and repeat the previous step; go on this way as to reach the desired low flame point.

NOTE: remembern that cam IV must shift according to cam III (see step 2).

16 The low flame position must never match the ignition position that is why cam **III** must be set 20°- 30° more than the ignition position.

17 Turn the burner off; then start it up again. If the adjustment is not correct, repeat the previous steps.

18 Now adjust the air pressure switch (see next paragraph).

Calibration of air pressure switch

To calibrate the air pressure switch, proceed as follows:

- Remove the transparent plastic cap.
- Once air and fuel setting have been accomplished, startup the burner.
- During the pre-purge phase o the operation, turn slowly the adjusting ring nut **VR** in the clockwise direction (to increase the adjusting pressure) until the burner lockout, then read the value on the pressure switch scale and set it to a value reduced by 15%.
- Repeat the ignition cycle of the burner and check it runs properly.
- Refit the transparent plastic cover on the pressure switch.

Fully modulating burners

To adjust the fully-modulating burners, use the **CMF** switch on the burner control panel (see chapter “ELECTRICAL WIRING DIAGRAMS”), instead of the **TAB** thermostat as described on the previous paragraphs about the progressive burners. Go on adjusting the burner as described before, paying attention to use the CMF switch intead of **TAB**.

The **CMF** position sets the oprating stages: to drive the burner to the high-flame stage, set CMF=2; to drive it to the low-flame stage, set CMF=1.

To move the adjusting cam set CMF=1 and then CMF=0.

CMF = 0 stop
CMF = 1 low flame operation
CMF = 2 high flame operation
CMF = 3 automatic operation

For further details, see the burner modulator reference guide.

PART II: OPERATION

LIMITATIONS OF USE

THE BURNER IS AN APPLIANCE DESIGNED AND CONSTRUCTED TO OPERATE ONLY AFTER BEING CORRECTLY CONNECTED TO A HEAT GENERATOR (E.G. BOILER, HOT AIR GENERATOR, FURNACE, ETC.), ANY OTHER USE IS TO BE CONSIDERED IMPROPER AND THEREFORE DANGEROUS.

THE USER MUST GUARANTEE THE CORRECT FITTING OF THE APPLIANCE, ENTRUSTING THE INSTALLATION OF IT TO QUALIFIED PERSONNEL AND HAVING THE FIRST COMMISSIONING OF IT CARRIED OUT BY A SERVICE CENTRE AUTHORISED BY THE COMPANY MANUFACTURING THE BURNER.

A FUNDAMENTAL FACTOR IN THIS RESPECT IS THE ELECTRICAL CONNECTION TO THE GENERATOR'S CONTROL AND SAFETY UNITS (CONTROL THERMOSTAT, SAFETY, ETC.) WHICH GUARANTEES CORRECT AND SAFE FUNCTIONING OF THE BURNER.

THEREFORE, ANY OPERATION OF THE APPLIANCE MUST BE PREVENTED WHICH DEPARTS FROM THE INSTALLATION OPERATIONS OR WHICH HAPPENS AFTER TOTAL OR PARTIAL TAMPERING WITH THESE (E.G. DISCONNECTION, EVEN PARTIAL, OF THE ELECTRICAL LEADS, OPENING THE GENERATOR DOOR, DISMANTLING OF PART OF THE BURNER).

NEVER OPEN OR DISMANTLE ANY COMPONENT OF THE MACHINE.

OPERATE ONLY THE MAIN SWITCH, WHICH THROUGH ITS EASY ACCESSIBILITY AND RAPIDITY OF OPERATION ALSO FUNCTIONS AS AN EMERGENCY SWITCH, AND ON THE RESET BUTTON.

IN THE EVENT OF REPEATED LOCKOUTS, DO NOT PERSIST WITH THE RESET BUTTON AND CONTACT QUALIFIED PERSONNEL WHO WILL PROCEED TO ELIMINATE THE MALFUNCTION.

WARNING: DURING NORMAL OPERATION THE PARTS OF THE BURNER NEAREST TO THE GENERATOR (COUPLING FLANGE) CAN BECOME VERY HOT, AVOID TOUCHING THEM SO AS NOT TO GET BURNT.

OPERATION

⚠	***ATTENTION:*** **before starting the burner up, be sure that the manual cutoff valves are open and check that the pressure upstream the gas train complies the value quoted on paragraph "Technical specifications".**

1 Set to the ON position the main switch on the burner control panel.
2 Check the control box is not in the lockout position; in such a case reset it by the reset pushbutton.
3 Check that the series of thermostats (or pressure switches) enable the burner to operate.
4 The startup sequence begins: the control box ignites the fan and pump motors and energises the ignition transformer as well.
5 At the end of the pre-purge stage, the light oil solenoid valve EVG is energised and the burner is on.
6 The ignition transformer is energized for few seconds after the ignition of the flame (post-ignition time) and at the end of this time is de-energised.
7 After the ignition the actuator moves to the high flame position for some seconds, then the operation begins and the burner switches to high flame or to low flame, according to the plant demand.

PART III: MAINTENANCE

At least once a year carry out the maintenance operations listed below. In the case of seasonal servicing, it is recommended to carry out the maintenance at the end of each heating season; in the case of continuous operation the maintenance is carried out every 6 months.

⚠	**WARNING: ALL OPERATIONS ON THE BURNER MUST BE CARRIED OUT WITH THE MAINS DISCONNECTED AND THE FUEL MANAUL CUTOFF VALVES CLOSED!**
	ATTENTION: READ CAREFULLY THE "WARNINGS" CHAPTER AT THE BEGINNIG OF THIS MANUAL.

ROUTINE MAINTENANCE

- Check and clean the ignitor gas filter cartdrige, replace if necessary.
- Check and clean the fuel filter cartdrige, replace if necessary.
- Check and clean the filter inside the light oil pump: filter must be thoroughly cleaned at least once in a season to ensure correct working of the fuel unit. To remove the filter, unscrew the four screws on the cover. When reassemble, make sure that the filter is mounted with the feet toward the pump body. If the gasket between cover and pump housing should be damaged, it must be replaced. An external filter should always be installed in the suction line upstream of the fuel unit.
- Check the fuel hoses for possible leaks.
- Remove, clean and check the combustion head (see Fig. 21).
- Check and clean the ignition electrode on the pilot burner, adjust and, if necessary, replace it (page 35).
- Check and clean the detection photoresistor, adjust and, if necessary, replace it (Fig. 23).
- Remove and clean the fuel nozzle ⚠ ***(Important:* cleaning must be performed using solvent, not metal tools!*).*** At the end of maintenance operations after the burner reassembly, light the flame and check its shape, replacing the nozzle whenever a questionable flame shape appears. Whenever the burner is used intensely, we recommend preventively replacing the nozzle at the start of each heating season.
- Clean and grease levers and rotating parts.

Maintenance of the governor with filter (ignitor gas train)

figura sottofigura sottoBefore disassmbling the device, be sure that there is no pressurised gas inside it.

To check the filtering part (1) on threaded bodies (see):

- remove the bottom cover, unscrewing the fixing screws;
- remove the filtering part (1), clean it with water and soap, blow it with compressed air or replace it if necessary;
- reassemble the filtering part in its initial position checking that it is placed in its own slots (see);
- reassemble the bottom cover (3), being sure that the main bolt is centered in the bottom cover slot.

To check the filtering part (1) on flanged bodies (see):

- remove the bottom cover, unscrewing the fixing screws;
- remove the filtering part (1), clean it with water and soap, blow it with compressed air or replace it if necessary;
- reassemble the filtering part in its initial position checking that it is placed in its own slots (see);

NOTE: pay attention that the teflon ring (5): while reassembling the cover (3), it must be placed inside the proper bell/slot (6).

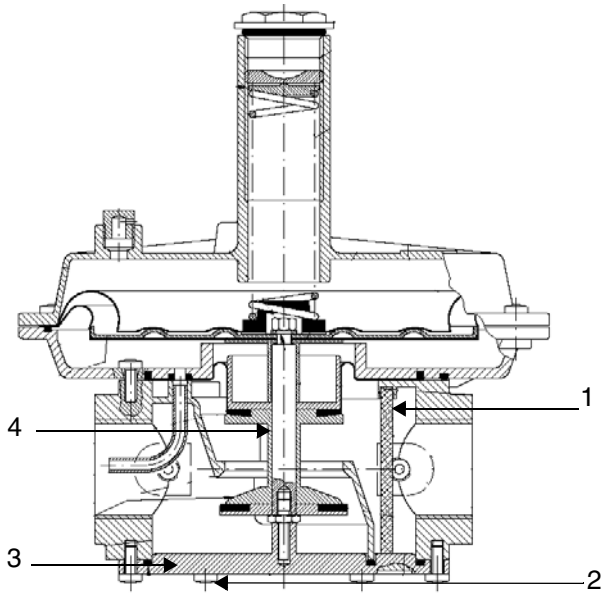

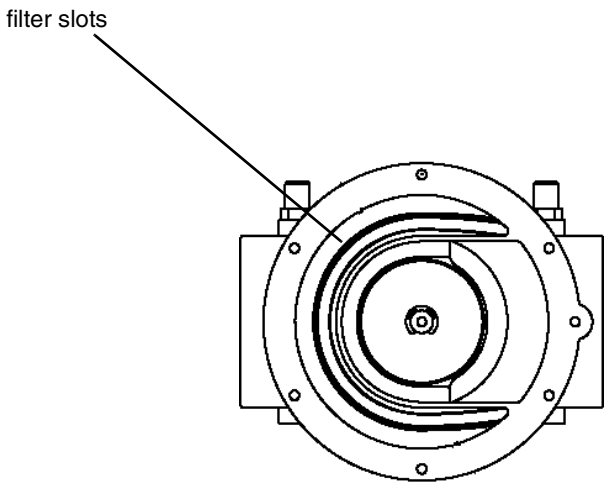

Light oil filter maintenance

For correct and proper servicing, proceed as follows:

1 shut off fuel in the line section being serviced;
2 unscrew the tray;
3 remove the filter cartridge from its support and wash it with petrol or replace if necessary; check seal O-Ring, replace if necessary;
4 reassemble the tray and restore fuel flow.

Removing the combustion head

- Remove the top cover C;
- remove the photoresistor from its seat;
- unscrew the revolving connectors (E in Fig. 20) on the fuel pipes (use 2 spanners to avoid loosening the connections attached to the distributor block);
- loosen the screw VRT to free the threaded rod AR, then screw out the 2 screws V holding the washer R and the screw VRT in position;
- remove the whole assembly as shown in Fig. 19.

Note: to replace the combustion head reverse the procedure described above.

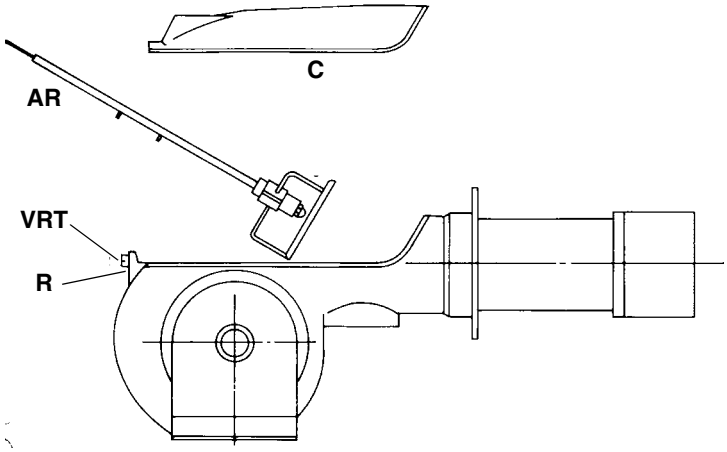

Fig. 19

Removing the gun

1 Remove the combustion head, as described on the previous paragraph;
2 slacken the screw VB
3 remove the lance with the nozzle holder
4 to replace the combustion head reverse the procedure described above.

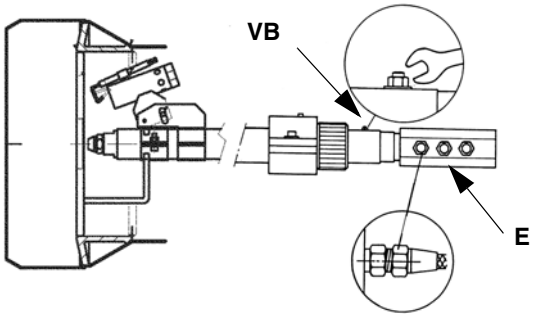

Fig. 20

Electrode position setting

⚠	**ATTENTION:** avoid the ignition electrode to contact metallic parts (blast tube, head, etc.), otherwise the boiler's operation would be compromised. Check the electrode position after any intervention on the combustion head.

To guarantee a good ignition, the masures below (in mm) must be observed (Fig. 21).

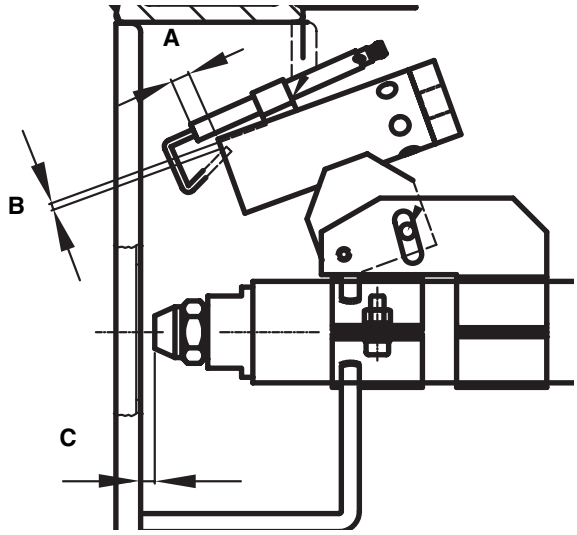

A= 8 mm
B= 3 mm
C= 8 mm

Fig. 21

Replacing the ignition electrode

⚠	**ATTENTION:** avoid the ignition electrode to contact metallic parts (blast tube, head, etc.), otherwise the boiler's operation would be compromised. Check the electrode position after any intervention on the combustion head.

To replace the ignition electrode, proceed as follows:

1 remove the burner cover
2 disconnect the electrode cable
3 remove the combustion head (see par. "Removing the combustion head");
4 loose the screw that fasten the ignition electrode to the burner pilot;
5 remove the electrode and replace it, referring to the values quoted on Fig. 21;

Cleaning and replacing the detection photoresistor

To clean/replace the detection photoresistor proceed as follows:

1 Disconnect the system from the electrical power supply.
2 Shut off the fuel supply
3 remove the photoresistor from its slot;
4 clean it using a clean cloth;
5 if necessary, replace it;
6 insert the photoresistor into its slot.

Checking the detection current

To measure the detection signal follow the diagram in Fig. 22 - Fig. 23.

If the signal is not in the advised range, check the electrical contacts, the cleaning of the combustion head, the position of the photoresistor and if necessary replace it.

Control box	Minimum current intensity with flame-Minimum detection signal
Siemens LAL	6.5µA

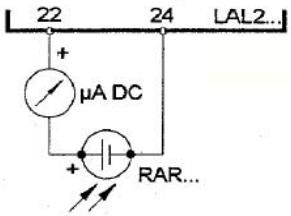

Fig. 22

Flame detector	Minimum detection signal
Krom Schroeder IFW15	1µA

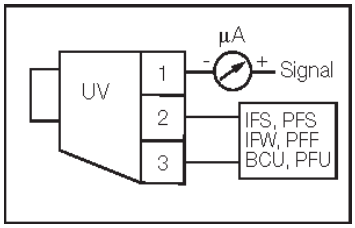

Fig. 23

Seasonal stop

To stop the burner in the seasonal stop, proceed as follows:

1 turn the burner's main switch to 0 (Off position)
2 disconnect the power mains
3 close the fuel cock of the supply line

Burner disposal

In case of disposal, follow the instructions according to the laws in force in your country about the "Disposal of materials".

TROUBLESHOOTING

	THE BURNER DOESN'T START	THE BURNER REPEATS PRE-PURGE	NOISY FUEL PUMP	THE BURNER DOESN'T START AND STOPS	THE BURNER STARTS AND STOPS	THE BURNER DOESN'T SWITCH TO HIGH FLAME	THE BURNER STOPS DURING OPERATION	THE BURNER STOPS AND REPEATS THE CYCLE DURING OPE-RATION
MAIN SWITCH OPEN	●							
LINE FUSE INTERVENTION	●							
MAX. PRESSURE SWITCH FAULT	●							●
FAN THERMAL CUTOUT INTERVENTION	●							
AUXILIARY RELAIS FUSES INTERVENTION	●							
CONTROL BOX FAULT	●	●		●	●		●	
SERVOCONTROL FAULT						●		
SMOKEY FLAME					●		●	
IGNITION TRANSFORMER FAULT				●				
IGNITION ELECTRODE DIRTY OR BADLY POSITIONED				●				
DIRTY NOZZLE				●			●	
FUEL SOLENOID VALVE DEFECTIVE				●			●	
PHOTORESISTOR DIRTY OR DEFECTIVE					●		●	
HI-LO FLAME THERMOSTAT DEFECTIVE						●		
WRONG POSITION OF SERVOCONTROL CAMS						●		
FUEL PRESSURE TOO LOW				●				
DIRTY FUEL FILTERS			●	●			●	

SPARE PARTS

Desription	TN1030
FLAME DETECTOR mod.KROM-SCHROEDER IFW15	2020114
CONTROL BOX mod.SIEMENS LAL2..	2020420
PILOT DETECTION ELECTRODE	2080115
PILOT IGNITION ELECTRODE	2080258
OIL FILTER	2090209
AIR PRESSURE SWITCH	2160085
IGNITOR GAS PRESSURE SWITCH	2160086
IGNITION TRANSFORMER	2170136
PUMP MOTOR	2180257
3-WAYS SOLENOID VALVE mod. SIRAI	2190437
GAS SOLENOID VALVE mod. BRAHMA EG*R12	2190502
OIL FLEXIBLE HOSES L = 600	2340059
OIL FLEXIBLE HOSES 3/8” L=385	2340088
GAS FLEXIBLE HOSES 1/2”M	234FX07
OIL FLEXIBLE HOSES L=347	234FX24
OIL FLEXIBLE HOSES L=485	234FX31
ADJUSTING CAM FOIL	2440014
ACTUATOR (SIEMENS SQM10)	2480004
DETECTION PHOTORESISTOR (SIEMENS RAR)	2510009
PRESSURE GOVERNOR	2570008
PRESSURE GOVERNOR (SUNTEC TV40)	2570036
MODULATOR (SIEMENS RWF40)	2570112
PUMP (SUNTEC T4)	2590148
NOZZLE (specify angle and rate when ordering) mod. BERGONZO B	2610210
GAS GOVERNOR WITH FILTER	2800085
COMBUSTION HEAD	30601A5
BLAST TUBE	30910L5
OIL RESISTOR (24kW)	6060008
IGNITION CABLE	6050157
OIL RESISTOR CARTRIDGE (80W)	6060010

SIEMENS LAL.. CONTROL BOX

Use

- Control and supervision of oil atomization burners
- For burners of medium to high capacity
- For intermittent operation (at least one controlled shutdown every 24 hours)
- Universally applicable for multistage or modulating burners

Housing and plug-in base

- Made of impact-proof and heat-resistance black plastic
- Lockout reset button with viewing window; located behind it:
- Lockout warning lamp
- Lockout indicator coupled to the spindle of the sequence switch and visible in the transparent lockout reset button
- uses easy-to-remember symbols to indicate the type of fault and the point in time lockout occurred

Base and plug-in section of the LAL... are designed such that only burner controls of the LAL... family can be plugged in.

- 24 connection terminals
- Auxiliary terminals «31» and «32»
- 3 earth terminals terminating in a lug for earthing the burner
- 3 neutral conductor terminals prewired to terminal 2
- 14 knockout holes for cable entry by means of cable glands
- 8 at the side
- 6 in the bottom of the base
- 6 lateral threaded knockout holes for cable entry glands Pg11 or M20

Operation

Flame detector and flame simulation test are made automatically during burner off times and the prepurge time «t1». If loss of flame occurs during operation, the burner control will initiate lockout. If automatic repetition of the startup sequence is required, the clearly marked wire link on the plug-in section of the LAL... must be cut away.

Pre-conditions for burner startup

- Burner control is not in the lockout position
- Sequence switch is in its start position (with LAL2 voltage is present at terminals 11 and 12.
- Air damper is closed; end switch «z» for the CLOSED position must feed power from terminal 11 to terminal8.
- Contact of the limit thermostat or pressure switch «W» and the contacts of any other switching devices in the control loop between terminals 4 and 5 must be closed e.g. a control contact for the oil preheater's temperature
- Normally closed contact of the air pressure switch must be closed.

Startup sequence

Start command by «R»:

«R» closes the start control loop between terminals 4 and 5

- The sequence switch starts to run
- Only prepurging, fan motor at terminal 6 receives power
- Pre- and postpurging, fan motor or flue gas fan at terminal 7 receives power on completion of «t7»
- On completion of «t16», the control command for opening the air damper is delivered via terminal 9
- Terminal 8 receives no power during the positioning time
- The sequence switch continues to run only after the air damper has fully closed.

t1 Prepurge time with air damper fully open:

- The correct functioning of the flame supervision circuit is checked during «t1»
- The burner control will initiate lockout if correct functioning is not ensured.

With LAL2:

Shortly after the beginning of «t1», the air pressure switch must change over from terminal 13 to terminal 14 otherwise, the burner control will initiate lockout start of the air pressure check.

t3 Short preignition time:

«Z» must be connected to terminal 16, release of fuel via terminal 18.

t3' Long preignition time: «Z» connected to terminal 15.

t3n Postignition time:

- «Z» must be connected to terminal 15

- With short preignition, «Z» remains on until «TSA» has elapsed connection to terminal 16.

t4 Interval «BV1 – BV2» or «BV1 - LR»: On completion of «t4», voltage is present at terminal 19. The voltage is required to power «BV2» connected to auxiliary switch «v» in the actuator.

t5 Interval: On completion of «t5», terminal 20 receives power. At the same time, control outputs 9 to 11 and input 8 are galvanically separated from the LAL...'s control section.

LAL... is now protected against reverse voltages from the load control circuit. With the release of «LR» at terminal 20, the startup sequence of the LAL... ends. After a few idle steps (steps with no contact position changes), the sequence switch switches itself off.

B Operating position of the burner

B-C Burner operation: during burner operation, «LR» drives the air damper to the nominal load or low-fire position, depending on heat demand; the release of the nominal load takes place via auxiliary switch «v» in the actuator and in the event of loss of flame during operation, the LAL... will initiate lockout. For automatic start repetition, the clearly marked wire link «B» on the plugin section of the LAL... must be cut away.

C Controlled shutdown: in the case of controlled shutdown, «BV...» will immediately be closed. At the same time, the sequence switch is started to program «t6»

C-D Sequence switch travels to start position «A»

t6 Postpurge time: fan «M2» connected to terminal 7. Shortly after the start of «t6», terminal 10 receives power and the air damper is driven to the MIN position. Full closing of the air damper starts only shortly before «t6» has elapsed initiated by the control signal at terminal 11. During the following burner off time, terminal 11 is live.

t13 Permissible afterburn time: during «t13», the flame signal input may still receive a flame signal.

D-A End of control program: start position

As soon as the sequence switch has reached the start position – having thereby switched itself off – the flame detector and flame simulation test will start again.

During burner off times, the flame supervision circuit is live.

Lockout and indication of the stop position

Whenever a fault occurs, the sequence switch stops and with it the lockout indicator. The symbol appearing above the reading mark indicates the type of fault:

◀ No start. One of the contacts is not closed (also refer to «Preconditions for burner startup»):

Extraneous light:

Lockout during or after completion of the control program

Examples: nonextinguished flame, leaking fuel valves faulty flame supervision circuit.

▲ Interruption of startup. No OPEN signal at terminal 8 from the changeover end switch «a». Terminals 6, 7 and 15 are live until fault has been corrected

P Lockout**.** No air pressure indication at the beginning of the air pressure check. Air pressure failure after the air pressure check.

■ Defect in the flame supervision circuit.

▼ Interruption of the startup sequence. No positioning signal at terminal 8 from the auxiliary switch «m» for the low-fire position. Terminals 6, 7 and 15 are live until fault has been corrected.

1 Lockout. No flame signal at the end of the safety time.

I Flame signa has been lost during operation.

A Consenso all'avviamento (ad esempio tramite il termostato o il pressostato R dell'impianto

B Operating position of the burner

B-C Burner operation: during burner operation, «LR» drives the air damper to the nominal load or low-fire position, depending on heat demand; the release of the nominal load takes place via auxiliary switch «v» in the actuator and in the event of loss of flame during operation, the LAL... will initiate lockout. For automatic start repetition, the clearly marked wire link «B» on the plugin section of the LAL... must be cut away.

C Controlled shutdown: in the case of controlled shutdown, «BV...» will immediately be closed. At the same time, the sequence switch is started to program «t6»

C-D Sequence switch travels to start position «A».

During burner off times, the flame supervision circuit is live.

Lockout indication

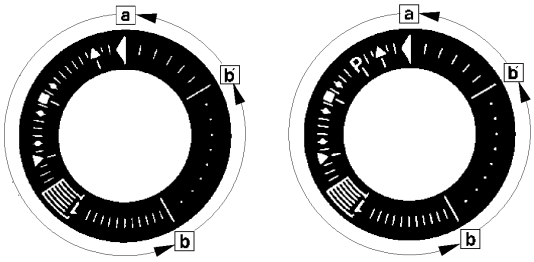

a-b Startup sequence
b-b' Idle step (with no contact confirmation)
b(b')-a Postpurge program

Burner control can immediately be reset after lockout:
Do not press the lockout reset button for more than 10 seconds
The sequence switch always travels to the start position first
After resetting
After rectification of a fault that led to shutdown
After each power failure
During this period of time, power is only fed to terminals 7 and 9...11.
Then, the LAL.... will program a new burner startup sequence

Specifications

Power supply	AC 230 V -15 / +10 %
for LAL2... on request AC 100 V -15 %...AC 110 V +10 %	
Frequency	50 Hz -6 %...60 Hz +6 %
Absorption	AC 3.5 VA
Mounting position	optional
Protection	IP 40
Perm. input current at terminal 1	AC 5 A max., 20 A peak
Perm. current rating of control terminals 3, 6, 7, 9...11, 15...20	4 A max., 20 A peak
Internal fuse	T6,3H250V according to IEC 127
External fuse	max. 10 A
Weight	Device 1000 g
	Plug-in base 165 g

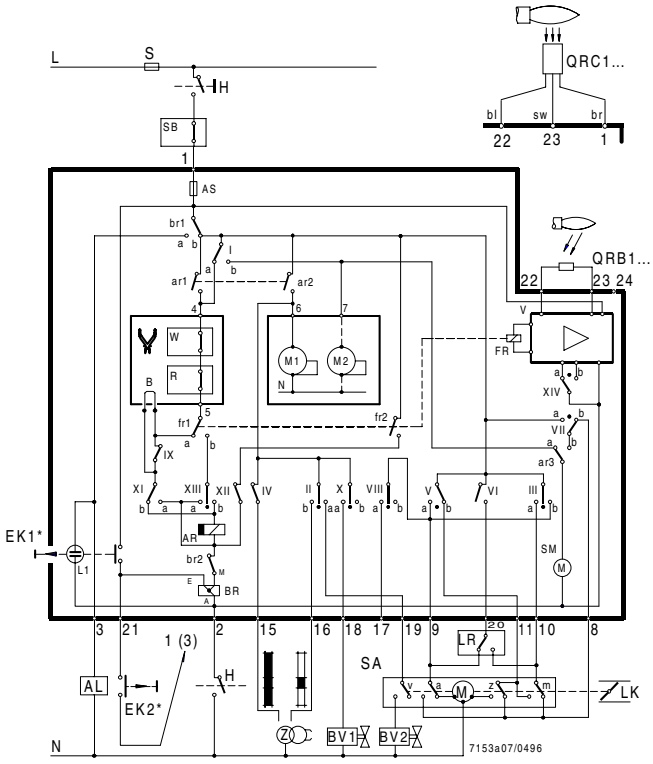

Sequence diagram

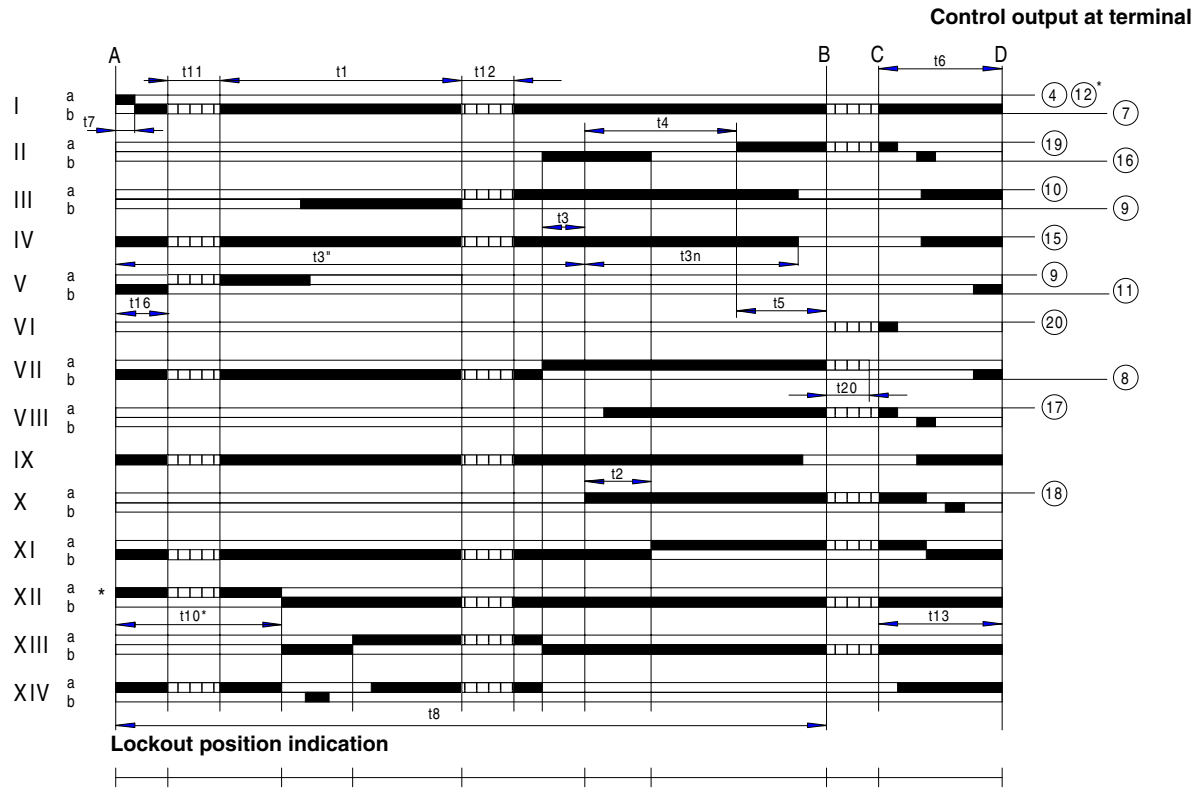

Key

t1	Prepurge time with air damper fully open
t2	Safety time
t3	Preignition time, short («Z» connected to terminal 16)
T3’	Preignition time, long («Z» connected to terminal 15)
t3n	Postignition time («Z» connected to terminal 15)
t4	Interval between voltage at terminals 18 and 19 («BV1-BV2»)
t5	Interval between voltage at terminals 19 and 20 («BV2» load controller)
t6	Postpurge time (with «M2»)
t7	Interval between start command and voltage at terminal 7 (start delay time for «M2»)
t8	Duration of startup sequence (excluding «t11» and «t12»)
t10	Interval from startup to the beginning of the air pressure check
t11	Air damper running time to the OPEN position
t12	Air damper running time to the low-fire position (MIN)
t13	Permissible afterburn time
t16	Interval to the OPEN command for the air damper
t20	For self-shutdown of the sequence switch

KROM-SCHROEDER IFW15 FLAME DETECTOR

- For flame detection
- For multi-flame control for intermittent
- operation in conjunction with the
- flame control units IFS
- Ionisation or UV control
- Potential-free change-over contacts
- Integrated flame control signal

APPLICATION

For the detection and signalling of the presence of a flame by means of ionisation or UV control. The flame detector is intended for use in conjunction with the flame control units IFS 110 IM, IFS 111 IM, IFS 410 or IFS 414. It can also be used where there is no fully automatic control required.

FEATURES

- Flame control with ionisation electrode or UV probe
- For intermittent operation
- Potential-free contacts for flame detection (1 normally closed, 1 normally open)

Function

The flame detector is ready for operation as soon as the mains voltage is applied to it. When the flame is established, the d.c. current energises a relay. The contacts of this relay can be used for control functions according to the application.

In a **multi-flame control system** (Fig. 2), several burners may be controlled at the same time. A flame control unit (e.g. IFS 110 IM) is used for the entire control functions and this also controls the first burner (only in the case of ionisation control). All remaining burners of this group are each controlled by an IFW 15 flame detector.

Should the flame controlled by a flame detector be extinguished during operation, the flame signal to the control unit is interrupted and an emergency cut-off occurs. This also occurs if a flame is simulated prior to ignition.

Technical data

Mains voltage:

IFW 15: 220/240 VAC -15/+10%, 50/60 Hz for earthed mains

IFW 15T: 110/120 VAC -15/+10%, 50/60 Hz or
220/240 VAC -15/+10%, 50/60 Hz for earthed or non-earthed mains

Consumption: 12 VA

Output voltage for ionisation electrode: 230 VAC

Ionisation current: > 1 µA

Output signal:

Potential-free contacts (1 normally closed, 1 normally open)

Contact load: max. 2 A

Connection terminals: 2 x 1.5 mm2

Flame detection: Lamp in the device

Ambient temperature: 20 °C to +60 °C

Fitting position: Arbitrary

Weight: 370 g

Construction: Housing made of impact-resistant plastic.

Plug-in upper housing with amplifying stage and green lamp for flame detection.

Plug socket with terminals, earthing strip and neutral bar 5 openings for Pg 9 cable gland provided.

Project planning information

Multi-flame control: No more than 5 flame detectors should be used per flame control unit since it must be guaranteed that all burners are ignited within the flame control unit's safety period (3 s, 5 s or 10 s).

Very long gas pipes may possibly lead to delayed ignition of a burner and to switchoff of the entire system. This is why the pilot gas valves should be installed directly on the burners. In the case of ionisation control, one of the burners can be monitored by the flame control unit.

In the case of UV control, one IFW 15 flame detector must be used per burner. A diode of type EM 513 must be fitted as shown on the wiring diagram (Fig. 4).

Load of the flame control unit per output: 1A, total current: 2 A.

Decoupling relays must be provided if the currents exceed these values.

Ionisation line: Max. 50 m; condition: well away from mains cable and sources of radiated noise - no electrical interference.

Several ionisation lines may be laid together in one plastic conduit. Avoid metal conduits wherever possible. Use high-voltage cables, non-screened.

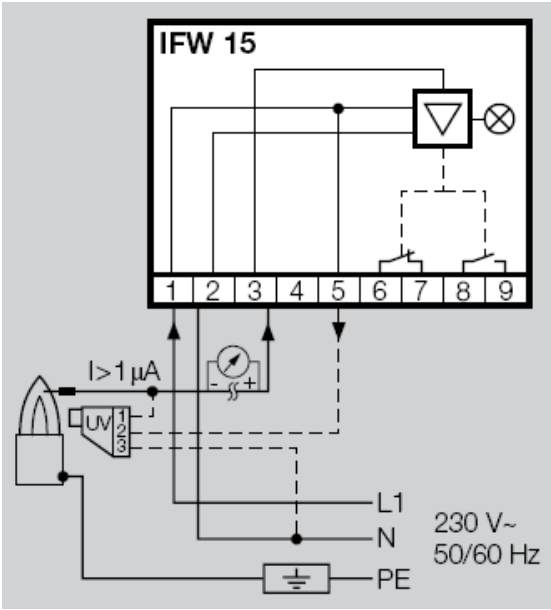

Fig. 1

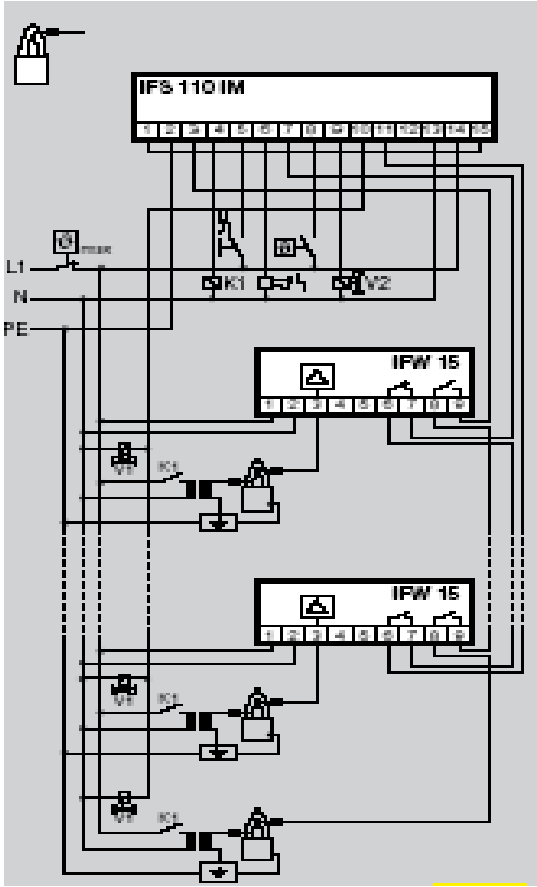

C.I.B. UNIGAS S.p.A.
Via L.Galvani, 9 - 35011 Campodarsego (PD) - ITALY
Tel. +39 049 9200944 - Fax +39 049 9200945/9201269
web site: www.cibunigas.it - e-mail: cibunigas@cibunigas.it

Note: specifications and data subject to change without notice. Errors and omissions excepted.

MANUALE USER SUPPORT

MULTI-THERMOSTAT

MCX06C

MCX06C is a multi-thermostat with four 100k NTC inputs. It can control up to 4 temperatures showing them (not more than 2 at the same time) on a couple of displays.
It is used to check and adjust oil heater temperatures. it works as follows:
as soon as the burner control gives the GO to the digital 1 input (terminals DI1-COM), the adjustment program runs (the relevant LED is ON). Reading the outlet temperature through the probe **Pb3** (terminals AI3-COM), a PID signal is produced. This signal becomes the set-point for the electric resistors. The electric resistors temperature is read through the probe **Pb1** (terminals AI1-COM) so that a second PID signal is produced. This second PID drives a couple of SCR by means of 0-10 V impulses in order to control the electric resistors temperature.
When the burner is in stand-by, resistor set-point is kept at the temperature set in parameter "**p30**" (see parameter group **REG**).
Probe **Pb4** (terminals AI4-COM) controls the inner heater temperature. As soon the relevant set-point is got, it drives the output number 4 (terminals C4-NO4) linked to the relais KTCN. This allows the oil pump to start and also the burner control proceeds with its cycle.
When set-point **trS** is got to, output number 5 is ON (terminals C5-NO5) linked to the relais KTRS. It switches the resistors off and activates an alarm on the device.
Probe **Pb2** (terminals AI2-COM), when fitted, drives output number 2 (terminals C2-NO2) linked to the relais KTCI. This allows the burner control to proceed with ignition.
See below the set-point recommended figures.

User interface:

Device:

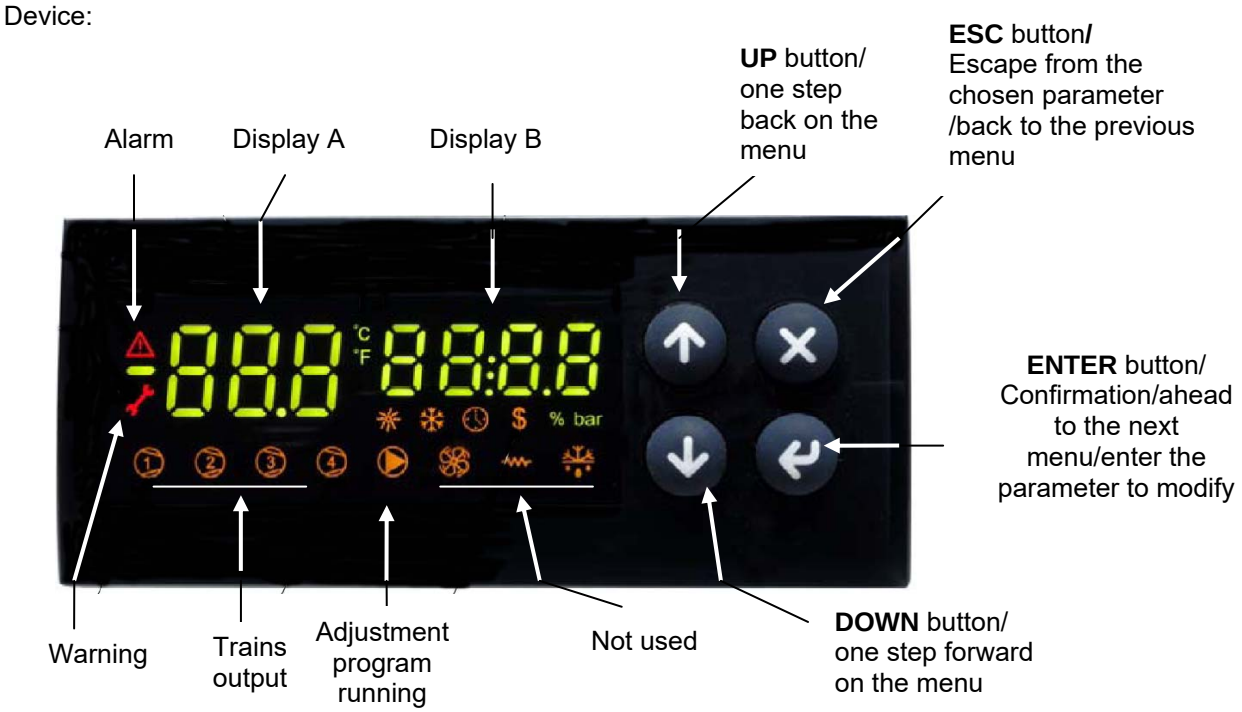

Note :
In normal operation, the display A shows the oil tank resistor temperature (probe Pb1).
In normal operation, the display B shows the oil output temperature (probe Pb3).

Connections from terminal side :

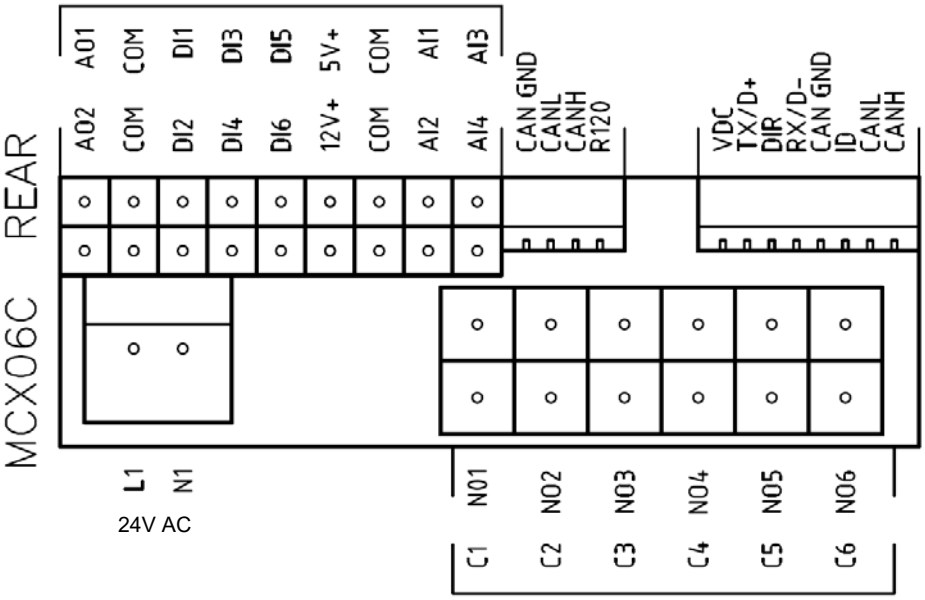

Probe connection:

input **AI1** = probe **Pb1** = set-point "**tr**" = oil heater temperature probe;
input **AI2** = probe **Pb2** = set-point "**tCI**" = plant consent temperature probe (when installed);
input **AI3** = probe **Pb3** = set-point "**OIL**" = oil heater output temperature probe (PID regulation);
input **AI4** = probe **Pb4** = set-point "**tcn**" = oil heater consent temperature probe.

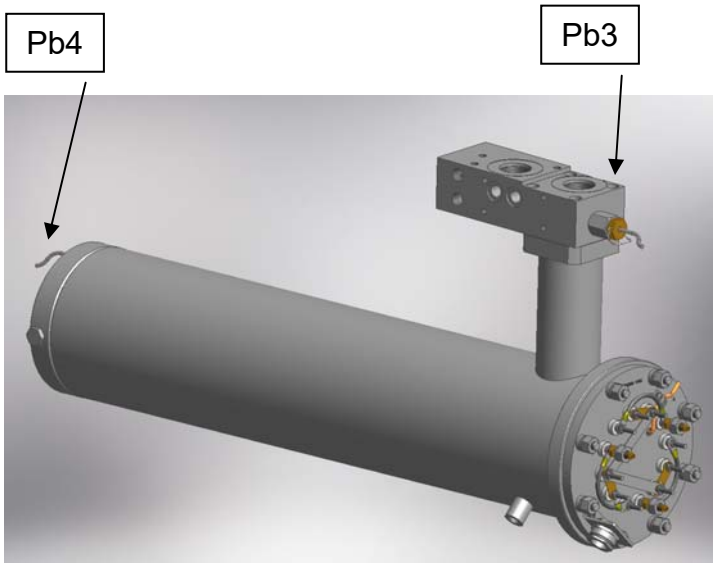

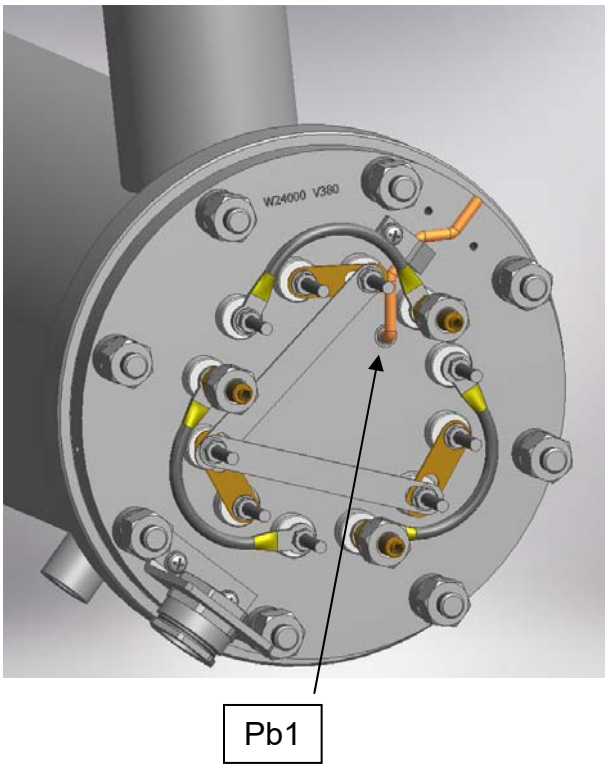

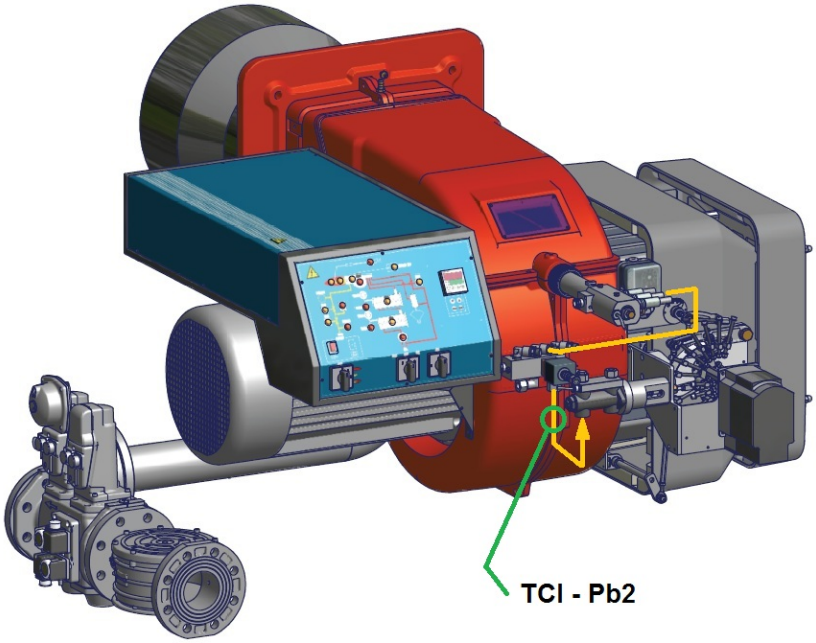

(**tCI - Pb2** probe only for mechanical atomizing burners)

Menu :
To enter the menu below, keep pushing **ENTER** for more than 3 s.

Menu code	Sub-menu code	Function	Notes
Prb		Probes values	You can see in sequence the 4 probe values (UP and DOWN keys): the probe code is on display A (Pb1,..., Pb4) and the probe value is on display B (not fitted or out of work probes show "----").
Log		Login	It defines the access level to menu and parameters (password)
	PAS	Password	Password input
Par		Parameters menu	Access to parameters (you have to login first)
	CnF	Configuration menu	Parameter configuration
	rEG	Regulation menu	Set to set-point, probe, thresholds etc.
ALA		Alarm menu	Access to alarm management
	Act	Active alarms	Show the active alarms
	rES	Reset alarms	Reset of the manual reset alarms
Loc		Lock/Unlock functions	Not used
InF	rEL	Software version	Installed software version
tUN		Autotuning	Activation On, deactivation ESC PID parameter autotuning

Login:
All the parameters inside the **Par** menu are locked by a password.
Without password, only set-points can be modified.
To login, on the log menu, press **ENTER** for more than 3 s. Input your password (level 2 or 3) inside **PAS**
With password for level 3 all the data can be set.

submenu **CnF - configuration parameters group :**

Menu	Parameter	Description	Additional description	Min	Max	Default	U.M.	Visibility condition	Password level	Modbus index
CnF		**CONFIGURATION**							0	
AI1		Analog Input 1							1	
	A1P	Probe 1 Presence	This parameter enables or disables the probe	0	1	1			2	1
	A1C	Calibration Probe 1	Don't modify it	-20,0	20,0	0,0	°C	A1P >0	3	2
AI2		Analog Input 2							1	
	A2P	Probe 2 Presence	This parameter enables or disables the probe	0	1	1			2	3
	A2C	Calibration Probe 2	Don't modify it	-20,0	20,0	0,0	°C	A2P >0	3	4
AI3		Analog Input 3							1	
	A3P	Probe 3 Presence	This parameter enables or disables the probe	0	4	1			2	5
	A3L	Min. Value conversion AI3	Don't modify it	-999,9	999,9	0,0		A3P >2	3	6
	A3H	Max. Value conversion AI3	Don't modify it	-999,9	999,9	30,0		A3P >2	3	7
	A3C	Calibration Probe 3	Don't modify it	-20,0	20,0	0,0	°C	A3P >0	3	8
AI4		Analog Input 4							1	
	A4P	Probe 4 Presence	This parameter enables or disables the probe	0	4	1			2	9
	A4L	Min. Value conversion AI4	Don't modify it	-999,9	999,9	0,0		A4P >2	3	10
	A4H	Max. Value conversion AI4	Don't modify it	-999,9	999,9	30,0		A4P >2	3	11
	A4C	Calibration Probe 4	Don't modify it	-20,0	20,0	0,0	°C	A4P >0	3	12
dI		Digital input							1	
	dI1	Input 1 polarity (Pump)	Change type of digital input (NC o NO)	0	1	1			3	13
	dI2	Alarm polarity from input 2	Change type of digital input (NC o NO)	0	2	2			2	14
	dI3	Alarm polarity from input 3	Change type of digital input (NC o NO)	0	2	2			2	15
	dI4	Alarm polarity from input 4	Change type of digital input (NC o NO)	0	2	2			2	16
	dI5	Alarm polarity from input 5	Change type of digital input (NC o NO)	0	2	2			2	17
	dI6	Alarm polarity from input 6	Change type of digital input (NC o NO)	0	2	2			2	18
dI		Digital output Alarm and Warning							1	
	dO5	Polarity output Warning	Change type of digital input (NC o NO)	0	1	0			3	19
	dO6	Polarity output Alarm	Change type of digital input (NC o NO)	0	1	0			3	20
SIC		Safety probe							1	
	SIp	Selection of safety probe	Probe which also activates the relay Warning (ns. KTRS)	0	4	4			3	21
SyS		Syistem							0	
	dSA	display A output	Probe temperature or set-point to be displayed in the left display	0	8	1			3	22
	dSb	display B output	Probe temperature or set-point to be displayed in the right display	0	8	3			3	23
PAS		Password							1	
	PL1	Password level 1		0	9999	0			1	32
	PL2	Password level 2		0	9999				2	33
	PL3	Password level 3		0	9999				3	34

Menu	Parameter	Description	Additional description	Min	Max	Default	U.M.	Visibility condition	Level	Modbus index
tUN		Autotuning							3	
	tU1	Output temperature hysteresis	Don't modify it	0	50,0	0,5	°C		3	35
	tU2	Startup number	Don't modify it	0	5	2			3	36
	tU3	Measurement cycles number	Don't modify it	1	4	2			3	37
	tU4	Max. differential command exit	Don't modify it	0,01	10,00	10,00	V		3	38
	tU5	Differential reduction exit command (%)	Don't modify it	0	100	15			3	39
	tU6	Calculating mode: 0= Symmetrical; 1=Asymmetrical; 2=Simple	Don't modify it	0	2	2			3	40
	tU7	Enabling	Don't modify it	0	1	1			3	41

Submenu **REG – regulation parameters group :**

Menu	Parameter	Description	Additional description	Min	Max	Default	U.M.	Visibility condition	Level	Modbus index
REG		**REGULATION**							0	
Pb1		Probe 1							0	
	rES	Set-point Probe 1 (Tank resistor)	Don't modify it	-50,0	200,0	0,0	°C		3	42
	AL1	Probe 1 - Low Temperature Alarm Threshold	Don't modify it	-50,0	200,0	-50,0	°C		3	43
	AH1	Probe 1 - High Temperature Alarm Threshold	Don't modify it	-50,0	200,0	200,0	°C		3	44
	d01	Probe 1 differential		0,0	20,0	3,0	°C		3	45
Pb2		Probe 2							0	
	tCI	Set-point Probe 2 (Plant Consent)	Plant consent according to table "**Set point adjustment**"	-50,0	200,0	120,0	°C		0	46
	AL2	Probe 2 - Low Temperature Alarm Threshold	Don't modify it	-50,0	200,0	-50,0	°C		2	47
	AH2	Probe 2 - High Temperature Alarm Threshold	Don't modify it	-50,0	200,0	200,0	°C		2	48
	d02	Probe 2 differential		0,0	20,0	3,0	°C		2	49
Pb3		Probe 3							0	
	rE3	Type of regulation of probe 3 (Oil tank exit)	Type of regulation 0= thermostat; 1= PID (don't modify)	0	1	1			3	50
	OIL	Set-point Probe 3 (Oil tank exit)	Nozzle oil temperature according to the table "**Set point adjustment**"	-50,0	200,0	130,0	°C		0	51
	AL3	Probe 3 - Low Temperature Alarm Threshold (Oil tank exit)	Don't modify it	-50,0	200,0	-50,0	°C		2	52
	AH3	Probe 3 - High Temperature Alarm Threshold (Oil tank exit)	Don't modify it	-50,0	200,0	200,0	°C		2	53
	Pb3	Proportional band for PID Probe 3 (Oil tank exit)	Proportional band for first PID regulation	0,0	200,0	60,0			3	54
	db3	Dead Zone for PID Probe 3 (Oil tank exit)	Dead zone for first PID regulation	0,0	20,0	0,0	°C	rE3 =1	3	55
	rt3	Integral Time (Ti) for PID Probe 3 (Oil tank exit)	Integral time for first PID regulation	0,0	1000,0	120,0	s	rE3 =1	3	56
	dt3	DerivativeTime (Td) for PID Probe 3 (Oil tank exit)	Derivative time for first PID regulation (~ ¼ di rt3)	0,0	300,0	30,0	s	rE3 =1	3	57
	db3	Dead Zone for PID Probe 3 (Oil tank exit)	Dead zone for first PID regulation	0,0	20,0	0,0	°C	rE3 =1	3	55

Menu	Parameter	Description	Additional description	Min	Max	Default	U.M.	Visibility condition	Level	Modbus index
	pi1	Overshooting for Integral action (Oil tank exit)	Don't modify it	100	1000	200		rE3 =1	3	58
	pi2	Derivative action enabling (Oil tank exit)	Don't modify it	0	1	1		rE3 =1	3	59
	pi3	Filtering factor for derivative action (Oil tank exit)	Don't modify it	1	100	20		rE3 =1	3	60
	pi4	Duty cicle PWM for output DO3 and/or AO1 (0-10V)	Don't modify it	1	300	5	s	rE3 =1	3	61
	SL3	Output selection DO3 and/or AO1 (0-10V)	Digital selection output for control thyristors; Don't modify it	0	2	AO1			3	62
	p21	Proportional band for PID Probe 1 (Tank resistor)	Proportional band for second PID regulation	0,0	200,0	50,0		rE3 =1	3	63
	p22	Dead Zone for PID Probe 1 (Tank resistor)	Dead zone for second PID regulation	0,0	20,0	0,0	°C	rE3 =1	3	64
	p23	Integral Time (Ti) for PID Probe 1 (Tank resistor)	Integral time for second PID regulation	0,0	1000,0	110,0	s	rE3 =1	3	65
	p24	DerivativeTime (Td) for PID Probe 1 (Tank resistor)	Derivative time for second PID regulation	0,0	300,0	23,0	s	rE3 =1	3	66
	p25	Overshooting for Integral action (Tank resistor)	Don't modify it	100	1000	200		rE3 =1	3	67
	p26	Derivative action enabling (Tank resistor)	Don't modify it	0	1	1		rE3 =1	3	68
	p27	Filtering factor for derivative action (Tank resistor)	Don't modify it	1	100	20		rE3 =1	3	69
	p28	Min Output PID Probe 3 (Oil tank exit)	Minimum value tank resistor set-point (delta of 100°C above p29)	0,0	1000,0	80,0	°C	rE3 =1	3	70
	p29	Max Output PID Probe 3 (Oil tank exit)	Maximum valuetank resistor set-point	0,0	1000,0	180,0	°C	rE3 =1	3	71
	SP0	Set-point Tank Resistor with oil pump stops (stand by)	Set-point of maintaining resistance during stand by "**Set point adjustment**"	-50,0	200,0	140,0	°C	rE3 =1	0	72
Pb4		Probe 4							0	
	tcn	Setpoint Probe 4 (Oil consent)	Oil consent according table "**Set point adjustment**"	-50,0	200,0	110,0	°C		0	73
	AL4	Low Threshold Probe 4		-50,0	200,0	-50,0	°C		2	74
	trS	Probe 4 - High Temperature Alarm Threshold (Safety Thermostat)	Tank resistor safety temperature according table "**Set point adjustment**"	-50,0	200,0	190,0	°C		0	75
	d04	Probe 4 differential		0,0	20,0	3,0	°C		2	76

Alarms & Warning:
When the red triangle on the top left lights, one or more alarms are activated.
When the red key on the left lights, the output N05-C5 is active and the relay **KTRS** switches the resistors OFF.
Check the reason, correct the failure and, as soon as the temperature is lower than **trS**, reset it through **ALA**/**rES .**
In order to show active alarms and warnings, select the relevant menu through **ALA**/**Act**.and, using the **UP** and **DOWN** buttons, scroll the lines.
In order to perform the manual reset, select **ALA**/**rES**.

Code	Description	Sourse	Active simbol	Reset type
trS	High temperature resistors alarm	probe Pb4 > value trS	red key	Manual
EP1	Probe Pb1 fault	Probe Pb1 fault	red triangle	Automatic
EP2	Probe Pb2 fault	Probe Pb2 fault	red triangle	Automatic
EP3	Probe Pb3 fault	Probe Pb3 fault	red triangle	Automatic
EP4	Probe Pb4 fault	Probe Pb4 fault	red triangle	Automatic

Set point adjustment:

All the parameters inside the **Par** menu are locked by a password. The user can modify only set points, without using any passwords.
The oil viscosity at the nozzle, should be about 1,5°E, which guarantees correct and safe functioning of the burner.
The temperature values in the table, guarantee the respect of that parameter and are valid when the pre heating tank is installed on the burner. For different configurations , please refer to the chapter "Recommendations to design heavy oil feeding plants" on the burner manual
Here below recommended set points:

Menu path				Oil viscosity at 50 °C according to the letter shown in the burner model				
				P	**N**	**E**	**D**	**H**
				89 cSt	< 50 cSt	> 50 cSt < 110 cSt	> 110 cSt < 400 cSt	> 400 cSt < 4000 cSt
				12 °E	< 7°E	> 7 °E < 15 °E	> 15 °E < 50 °E	> 50 °E < 530 °E
Par								
rEG	Pb1	tr	Oil heater temperature probe	parameter not visible				
	Pb2	tCI	Plant consent temperature probe (when installed)	20 °C	70 °C	70 °C	70 °C	---
	Pb3	Oil	oil heater output temperature probe (PID regulation);	60-70 °C	110-120 °C	120-130 °C	130-140 °C	140-150 °C
		SP0	Set-point oil heater with oil pump stopped (stand-by)	45 °C	120 °C	130 °C	140 °C	150 °C
	Pb4	tcn	Oil heater consent temperature probe	40 °C	100 °C	100 °C	110 °C	120 °C
		trS	Safety temperature tank resistors (manual reset)	120 °C	190-200 °C	190-200 °C	190-200 °C	190-200 °C

The above temperature values are suggested and refer to a plant designed according to the prescriptions in the burner user manual.
The suggested values can change in reference to the fuel oil specifications.

USER MANUAL OF MULTI-THERMOSTAT

MCX06C

MCX06C is a multi-thermostat with four 100k NTC inputs. It can control up to 4 temperatures showing them (not more than 2 at the same time) on a couple of displays.
It is used to check and adjust oil heater temperatures.

User interface:
Device:

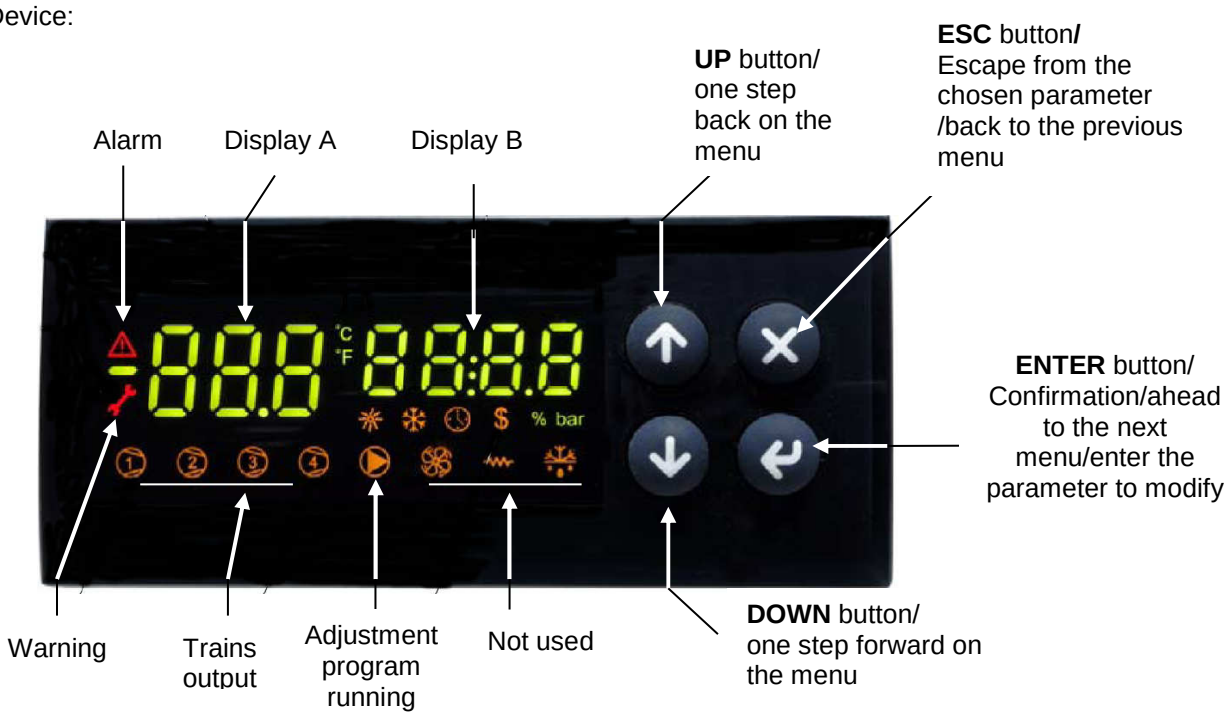

Note :
In normal operation, the display A shows the oil tank resistor temperature (probe Pb1).
In normal operation, the display B shows the oil output temperature (probe Pb3).

Connections from terminal side:

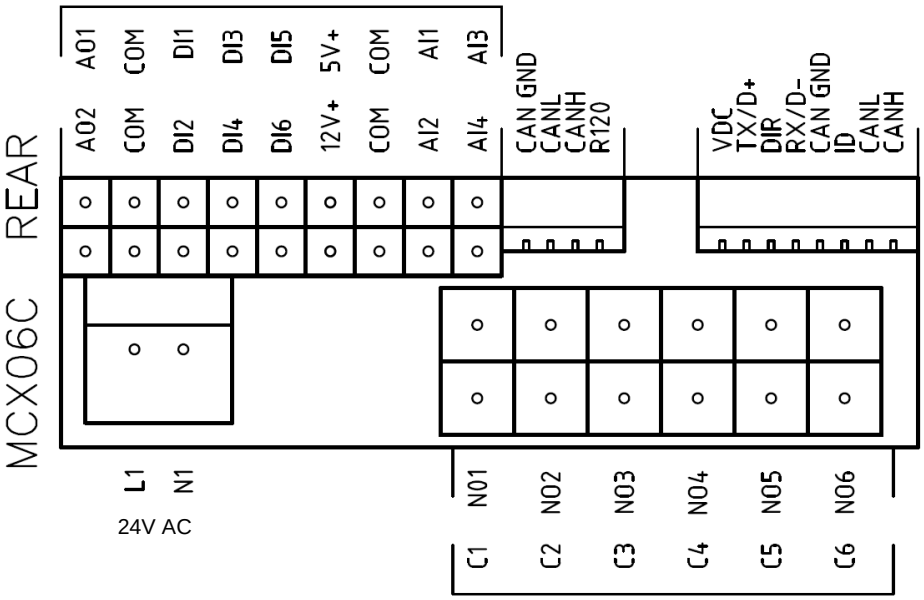

Probe connection:
input **AI1** = probe **Pb1** = set-point "**tr**" = oil heater temperature probe;
input **AI2** = probe **Pb2** = set-point "**tCI**" = plant consent temperature probe (when installed);
input **AI3** = probe **Pb3** = set-point "**OIL**" = oil heater output temperature probe (PID regulation);
input **AI4** = probe **Pb4** = set-point "**tcn**" = oil heater consent temperature probe.

Menu:
To enter the menu below, keep pushing **ENTER** for more than 3 s.

Menu code	Sub-menu code	Function	Notes
Prb		Probes values	You can see in sequence the 4 probe values (UP and DOWN keys): the probe code is on display A (Pb1,..., Pb4) and the probe value is on display B (not fitted or out of work probes show "----").
Log		Login	It defines the access level to menu and parameters (password)
	PAS	Password	Password input
Par		Parameters menu	Access to parameters (you have to login first)
	CnF	Configuration menu	Parameter configuration
	rEG	Regulation menu	Set to set-point, probe, thresholds etc.
ALA		Alarm menu	Access to alarm management
	Act	Active alarms	Show the active alarms
	rES	Reset alarms & Warning	Reset of the manual reset alarms and warning
Loc		Lock/Unlock functions	Not used
InF	rEL	Software version	Installed software version
tUN		Autotuning	Activation On, deactivation ESC PID parameter autotuning

Alarms & Warning:
When the red triangle on the top left lights, one or more alarms are activated.
When the red key on the left lights, the output N05-C5 is active and the relay **KTRS** switches the resistors OFF.
Check the reason, correct the failure and, as soon as the temperature is lower than **trS**, reset it through **ALA/rES .**
In order to show active alarms and warnings, select the relevant menu through **ALA/Act**.and, using the **UP** and **DOWN** buttons, scroll the lines.
In order to perform the manual reset, select **ALA/rES**.

Code	Description	Sourse	Active simbol	Reset type
trS	High temperature resistors alarm	probe Pb4 > value trS	red key	Manual
EP1	Probe Pb1 fault	Probe Pb1 fault	red triangle	Automatic
EP2	Probe Pb2 fault	Probe Pb2 fault	red triangle	Automatic
EP3	Probe Pb3 fault	Probe Pb3 fault	red triangle	Automatic
EP4	Probe Pb4 fault	Probe Pb4 fault	red triangle	Automatic

Set point adjustment:
All the parameters inside the **Par** menu are locked by a password.
The user can modify only set points (menu **rEG**), without using any passwords.
The oil viscosity at the nozzle, should be about 1,5°E, which guarantees correct and safe functioning of the burner.
The temperature values in the table, guarantee the respect of that parameter and are valid when the pre heating tank is installed on the burner. For different configurations , please refer to the chapter "Recommendations to design heavy oil feeding plants" in the burner manual.
Here below recommended set points:

Menu path				Oil viscosity at 50 °C according to the letter show n in the burner model				
				P	**N**	**E**	**D**	**H**
				89 cSt	< 50 cSt	> 50 cSt < 110 cSt	> 110 cSt < 400 cSt	> 400 cSt < 4000 cSt
				12 °E	< 7°E	> 7 °E < 15 °E	> 15 °E < 50 °E	> 50 °E < 530 °E
Par								
rEG	Pb1	tr	Oil heater temperature probe	parameter not visible				
	Pb2	tCI	Plant consent temperature probe (when installed)	20 °C	70 °C	70 °C	70 °C	---
	Pb3	Oil	oil heater output temperature probe (PID regulation);	60-70 °C	110-120 °C	120-130 °C	130-140 °C	140-150 ° C
		SP0	Set-point oil heater with oil pump stopped (stand-by)	45 °C	120 °C	130 °C	140 °C	150 °C
	Pb4	tcn	Oil heater consent temperature probe	40 °C	100 °C	100 °C	110 °C	120 °C
		trS	Safety temperature tank resistors (manual reset)	120 °C	190-200 °C	190-200 °C	190-200 °C	190-200 °C

The above temperature values are suggested and refer to a plant designed according to the prescriptions in the burner user manual. The suggested values can change in reference to the fuel oil specifications.

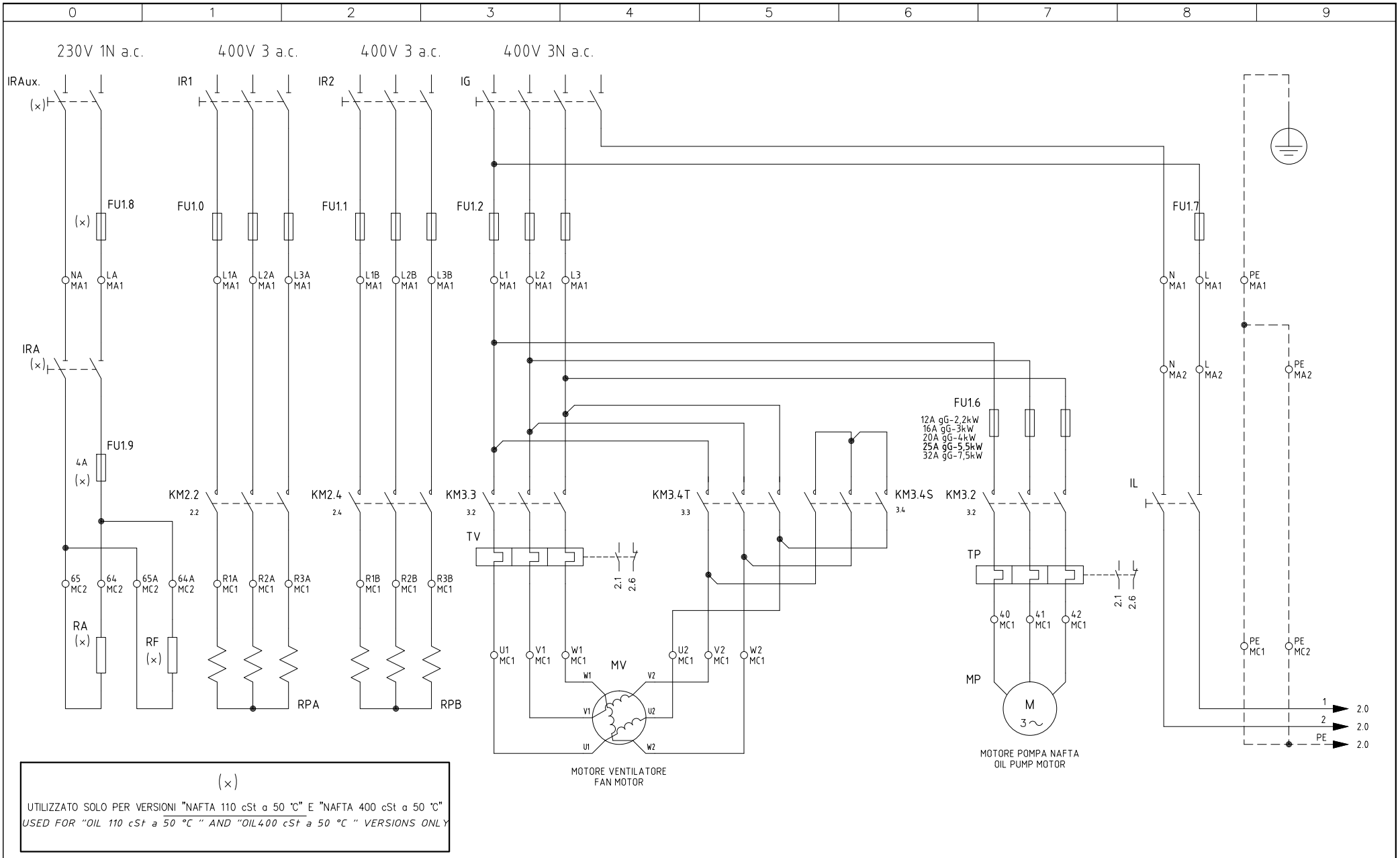

REV.	MODIFICA	DATA	FIRME
02	TOLTO/REMOVED "CMF"	04/10/11	U. PINTON
01	AGGIUNTO/ADDED SQM40.265A	15/12/09	U. PINTON

UNIGAS

Impianto: TIPI/TYPES PN1025/PN1030/P1040
MODELLO/MODEL x–.PR.S.xx.A

Descrizione: CON IFW15T
WITH IFW15T

Ordine:
Commessa:
Esecutore: U. PINTON
Data Controllato: 04/10/2011
Controllato: S. MARCHETTI

Data: 13/05/2009
Revisione: 02
Dis. N. 12 – 154

PREC.: /
FOGLIO: 1
SEGUE: 2
TOTALE: 7

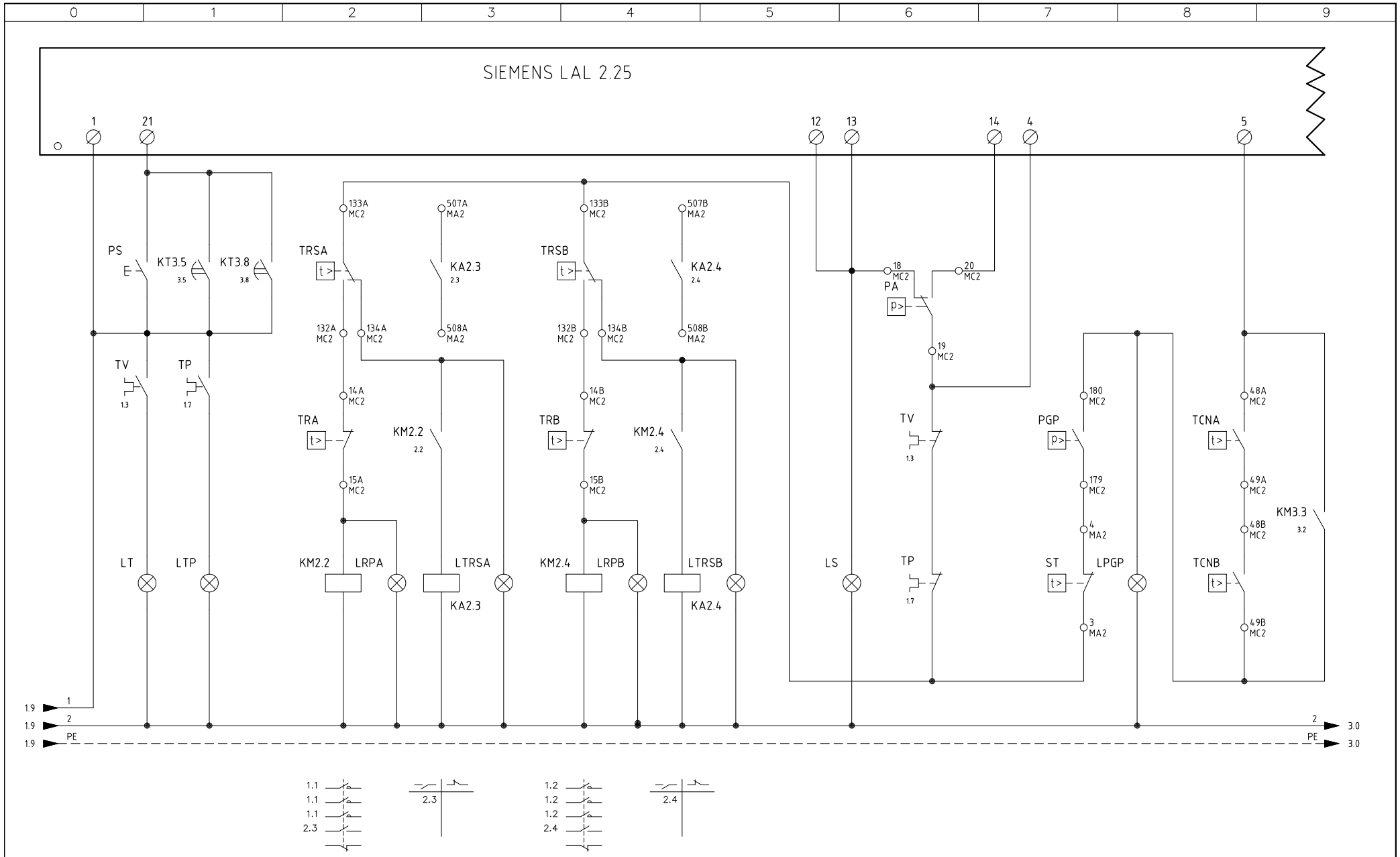

Data 13/05/2009		PREC.	FOGLIO
Revisione 02		1	2
Dis. N. 12 – 154		SEGUE	TOTALE
		3	7

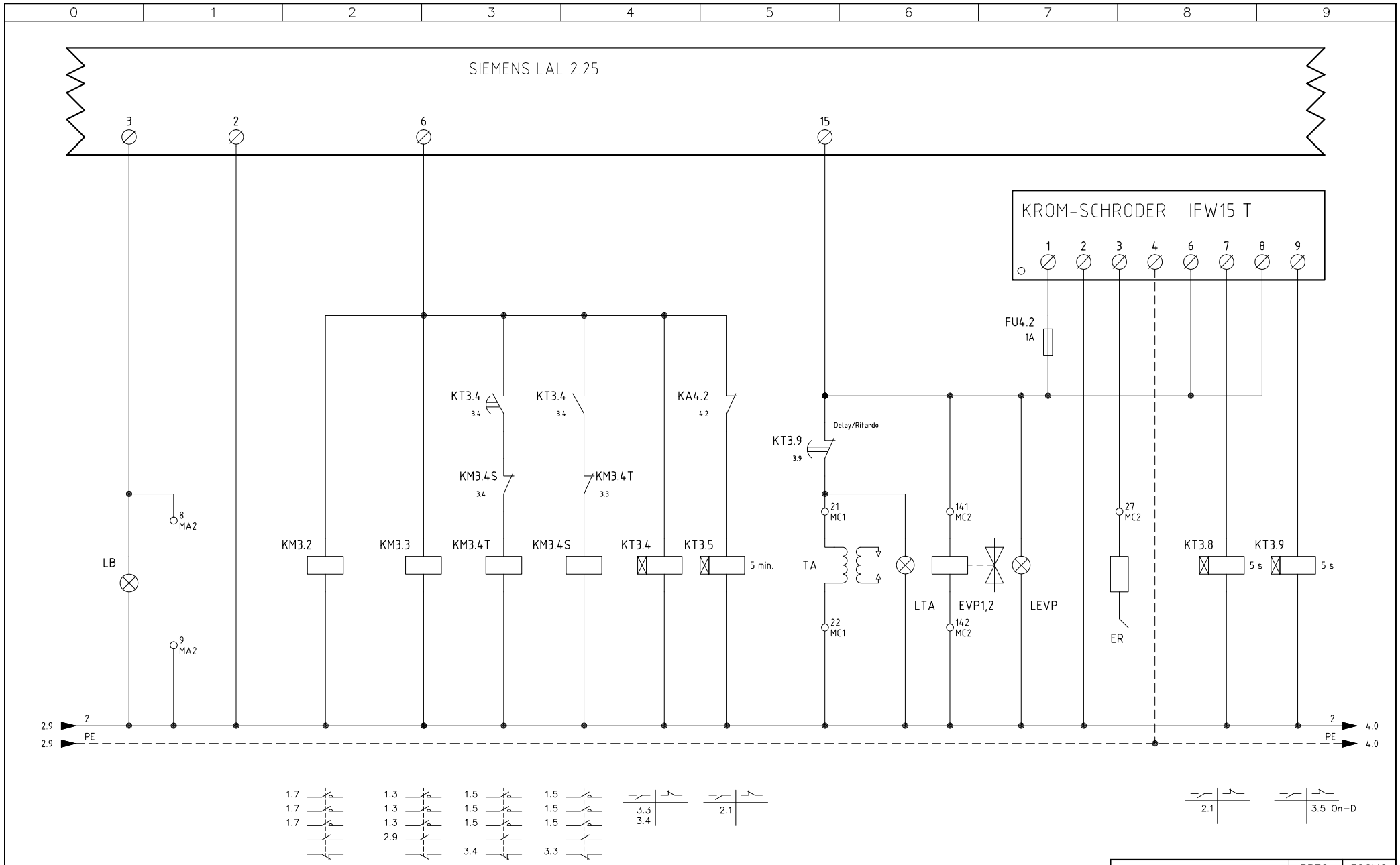

Data	13/05/2009	PREC.	FOGLIO
Revisione	02	2	3
Dis. N.	12 – 154	SEGUE	TOTALE
		4	7

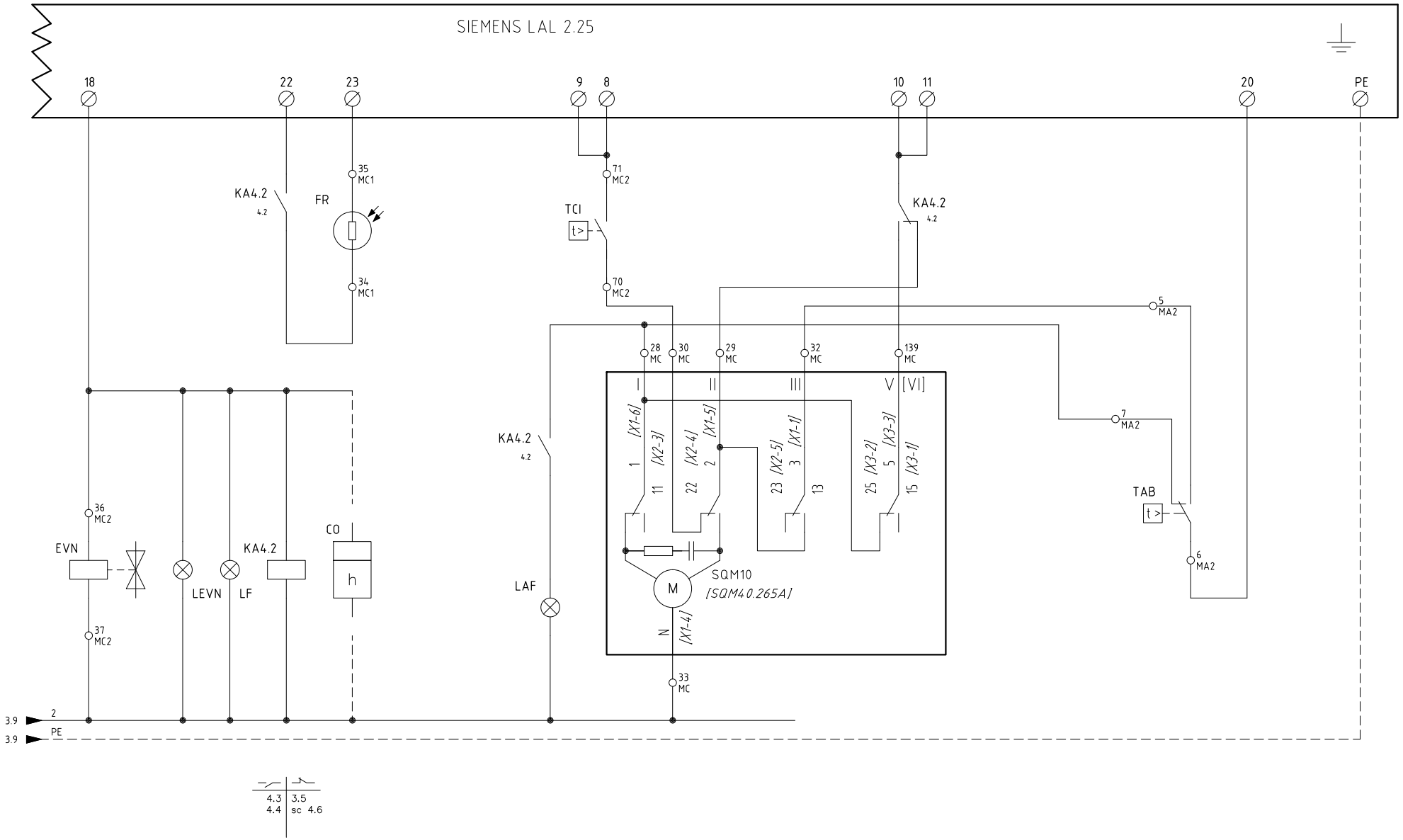

Data 13/05/2009		PREC.	FOGLIO
Revisione 02		3	4
Dis. N. 12 – 154		SEGUE	TOTALE
		5	7

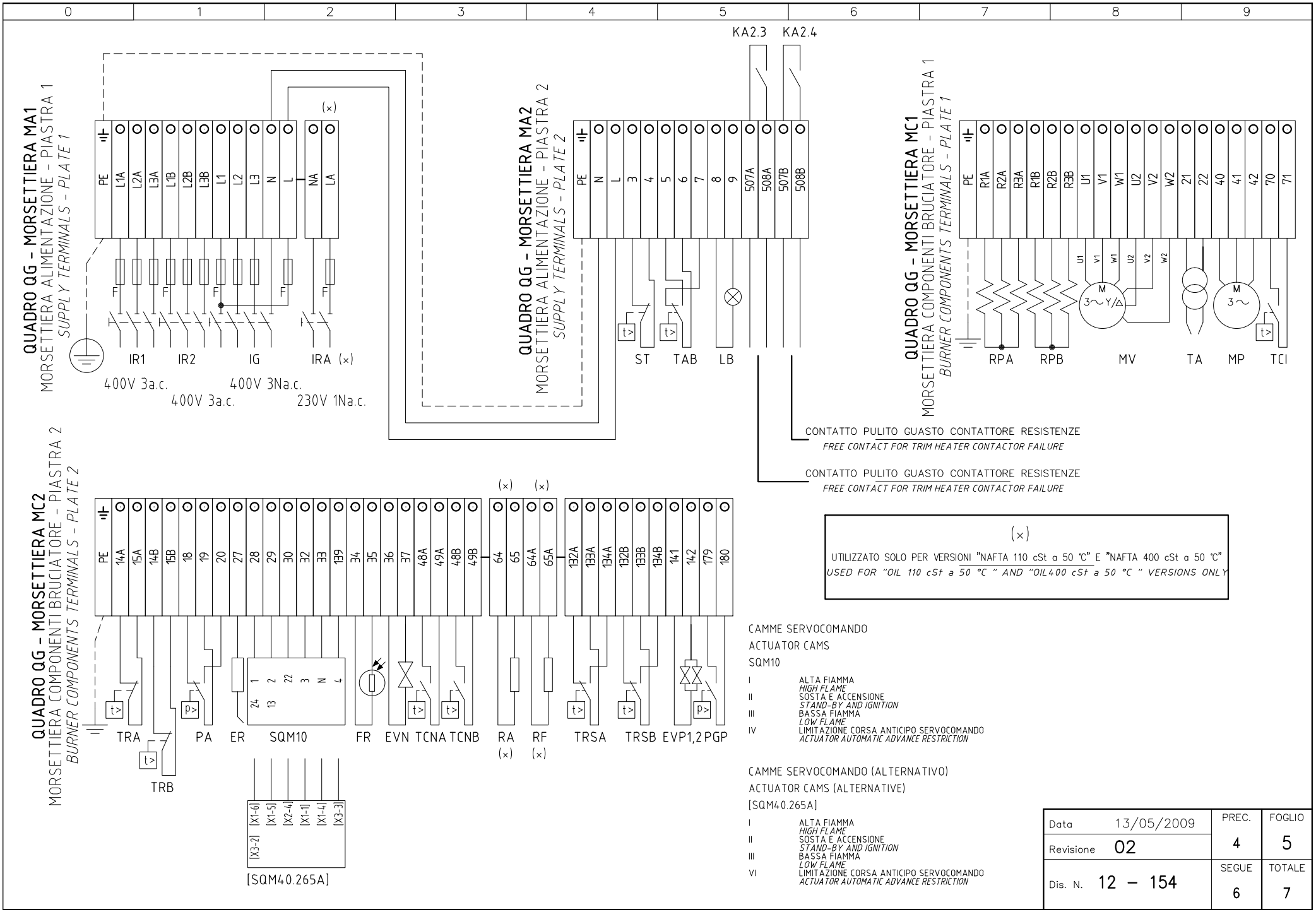
QUADRO QG - MORSETTIERA MA1
MORSETTIERA ALIMENTAZIONE - PIASTRA 1
SUPPLY TERMINALS - PLATE 1
PE L1A L2A L3A L1B L2B L3B L1 L2 L3 N L NA LA
IR1 IR2 IG IRA (x)
400V 3a.c.
400V 3a.c.
400V 3Na.c.
230V 1Na.c.
QUADRO QG - MORSETTIERA MA2
MORSETTIERA ALIMENTAZIONE - PIASTRA 2
SUPPLY TERMINALS - PLATE 2
PE N L 3 4 5 6 7 8 9 507A 508A 507B 508B
KA2.3 KA2.4
ST TAB LB
QUADRO QG - MORSETTIERA MC1
MORSETTIERA COMPONENTI BRUCIATORE - PIASTRA 1
BURNER COMPONENTS TERMINALS - PLATE 1
PE R1A R2A R3A R1B R2B R3B U1 V1 W1 U2 V2 W2 21 22 40 41 42 70 71
RPA RPB MV TA MP TCI
CONTATTO PULITO GUASTO CONTATTORE RESISTENZE
FREE CONTACT FOR TRIM HEATER CONTACTOR FAILURE
CONTATTO PULITO GUASTO CONTATTORE RESISTENZE
FREE CONTACT FOR TRIM HEATER CONTACTOR FAILURE
QUADRO QG - MORSETTIERA MC2
MORSETTIERA COMPONENTI BRUCIATORE - PIASTRA 2
BURNER COMPONENTS TERMINALS - PLATE 2
PE 14A 15A 14B 15B 18 19 20 27 28 29 30 32 33 139 34 35 36 37 48A 49A 48B 49B 64 65 64A 65A 132A 133A 134A 132B 133B 134B 141 142 179 180
TRA TRB PA ER SQM10 FR EVN TCNA TCNB RA RF TRSA TRSB EVP1,2 PGP
[SQM40.265A]
(x)
UTILIZZATO SOLO PER VERSIONI "NAFTA 110 cSt a 50 °C" E "NAFTA 400 cSt a 50 °C"
USED FOR "OIL 110 cSt a 50 °C " AND "OIL400 cSt a 50 °C " VERSIONS ONLY
CAMME SERVOCOMANDO
ACTUATOR CAMS
SQM10
I ALTA FIAMMA
HIGH FLAME
II SOSTA E ACCENSIONE
STAND-BY AND IGNITION
III BASSA FIAMMA
LOW FLAME
IV LIMITAZIONE CORSA ANTICIPO SERVOCOMANDO
ACTUATOR AUTOMATIC ADVANCE RESTRICTION
CAMME SERVOCOMANDO (ALTERNATIVO)
ACTUATOR CAMS (ALTERNATIVE)
[SQM40.265A]
I ALTA FIAMMA
HIGH FLAME
II SOSTA E ACCENSIONE
STAND-BY AND IGNITION
III BASSA FIAMMA
LOW FLAME
VI LIMITAZIONE CORSA ANTICIPO SERVOCOMANDO
ACTUATOR AUTOMATIC ADVANCE RESTRICTION
Data 13/05/2009
Revisione 02
Dis. N. 12 – 154
PREC. 4
FOGLIO 5
SEGUE 6
TOTALE 7

	SIGLA/ITEM	FOGLIO/SHEET	FUNZIONE	FUNCTION
	CO	4	CONTAORE DI FUNZIONAMENTO (OPTIONAL)	OPERATION TIME COUNTER (OPTIONAL)
	ER	3	ELETTRODO RILEVAZIONE FIAMMA PILOTA	PILOT FLAME DETECTION ELECTRODE
	EVN	4	ELETTROVALVOLA NAFTA	OIL SOLENOID VALVE
	EVP1,2	3	ELETTROVALVOLE PILOTA GAS	PILOT GAS ELECTRO-VALVES
	FR	4	FOTORESISTENZA RILEVAZIONE FIAMMA	PHOTORESISTOR FLAME DETECTOR
	FU1.0	1	FUSIBILI LINEA PRERISCALDATORE [RPA]	LINE PRE-HEATING [RPA] FUSES
	FU1.1	1	FUSIBILI LINEA PRERISCALDATORE [RPB]	LINE PRE-HEATING [RPB] FUSES
	FU1.2	1	FUSIBILI LINEA BRUCIATORE	BURNER LINE FUSES
	FU1.6	1	FUSIBILI LINEA POMPA	PUMP LINE FUSES
	FU1.7	1	FUSIBILE LINEA AUSILIARI	AUXILIARY LINE FUSE
(x)	FU1.8	1	FUSIBILE LINEA RESISTENZE AUSILIARIE	LINE AUXILIARY RESISTORS FUSE
(x)	FU1.9	1	FUSIBILE RESISTENZE AUSILIARIE	AUXILIARY RESISTORS FUSE
	FU4.2	3	FUSIBILE AUSILIARIO	AUXILIARY FUSE
	IFW15 T	3	RELE' RILEVAZIONE FIAMMA	FLAME DETECTOR RELAY
	IG	1	INTERRUTTORE LINEA BRUCIATORE	BURNER LINE SWITCH
	IL	1	INTERRUTTORE LINEA AUSILIARI	AUXILIARY LINE SWITCH
	IR1	1	INTERRUTTORE LINEA RESISTENZE PRERISCALDATORE	PRE-HEATING RESISTORS LINE SWITCH
	IR2	1	INTERRUTTORE LINEA RESISTENZE PRERISCALDATORE	PRE-HEATING RESISTORS LINE SWITCH
(x)	IRA	1	INTERRUTTORE RESISTENZE AUSILIARIE	AUXILIARY RESISTORS SWITCH
(x)	IRAux.	1	INTERRUTTORE RESISTENZE AUSILIARIE	AUXILIARY RESISTORS SWITCH
	KA2.3	2	RELE' AUSILIARIO SEGNALAZIONE GUASTO CONTATTORE RESISTENZE	AUXILIARY RELAY FOR TRIM HEATER CONTACTOR FAILURE
	KA2.4	2	RELE' AUSILIARIO SEGNALAZIONE GUASTO CONTATTORE RESISTENZE	AUXILIARY RELAY FOR TRIM HEATER CONTACTOR FAILURE
	KA4.2	4	RELE' AUSILIARIO	AUXILIARY RELAY
	KM2.2	2	CONTATTORE RESISTENZE PRERISCALDATORE [RPA]	PRE-HEATING RESISTORS [RPA] CONTACTOR
	KM2.4	2	CONTATTORE RESISTENZE PRERISCALDATORE [RPB]	PRE-HEATING RESISTORS [RPB] CONTACTOR
	KM3.2	3	CONTATTORE MOTORE POMPA NAFTA	OIL PUMP MOTOR CONTACTOR
	KM3.3	3	CONTATTORE MOTORE VENTILATORE (LINEA)	FAN MOTOR CONTACTOR (LINE)
	KM3.4S	3	CONTATTORE MOTORE VENTILATORE (STELLA)	FAN MOTOR CONTACTOR (STAR)
	KM3.4T	3	CONTATTORE MOTORE VENTILATORE (TRIANGOLO)	FAN MOTOR CONTACTOR (DELTA)
	KT3.4	3	TEMPORIZZATORE STELLA/TRIANGOLO	STAR/DELTA DELAYED RELAY
	KT3.5	3	RELE' TEMPORIZZATORE	DELAYED RELAY
	KT3.8	3	temporizzatore	TIMER
	KT3.9	3	TEMPORIZZATORE	TIMER
	LAF	4	LAMPADA SEGNALAZIONE ALTA FIAMMA BRUCIATORE	BURNER IN HIGH FLAME INDICATOR LIGHT
	LB	3	LAMPADA SEGNALAZIONE BLOCCO BRUCIATORE	INDICATOR LIGHT FOR BURNER LOCK-OUT
	LEVN	4	LAMPADA SEGNALAZIONE APERTURA EVN	INDICATOR LIGHT FOR OPENING OF ELECTRO-VALVE EVN

(x)

UTILIZZATO SOLO PER VERSIONI "NAFTA 110 cSt a 50 °C" E "NAFTA 400 cSt a 50 °C"

USED FOR "OIL 110 cSt a 50 °C " AND "OIL400 cSt a 50 °C " VERSIONS ONLY

Data 13/05/2009		PREC.	FOGLIO
Revisione 02		5	6
Dis. N. 12 – 154		SEGUE	TOTALE
		7	7

	SIGLA/ITEM	FOGLIO/SHEET	FUNZIONE	FUNCTION
	LEVP	3	LAMPADA SEGNALAZIONE APERTURA EVP	INDICATOR LIGHT FOR OPENING OF ELECTRO-VALVE EVP
	LF	4	LAMPADA SEGNALAZIONE FUNZIONAMENTO BRUCIATORE	INDICATOR LIGHT BURNER OPERATION
	LPGP	2	LAMPADA SEGNALAZIONE PRESSOSTATO GAS PILOTA	INDICATOR LIGHT FOR PRESENCE OF GAS IN THE PILOT NETWORK
	LRPA	2	LAMPADA SEGNALAZIONE FUNZIONAMENTO PRERISCALDATORE [RPA]	INDICATOR LIGHT FOR PRE-HEATING RESISTOR [RPA] OPERATION
	LRPB	2	LAMPADA SEGNALAZIONE FUNZIONAMENTO PRERISCALDATORE [RPB]	INDICATOR LIGHT FOR PRE-HEATING RESISTOR [RPB] OPERATION
	LS	2	LAMPADA SEGNALAZIONE SOSTA BRUCIATORE	INDICATOR LIGHT FOR BURNER STAND-BY
	LT	2	LAMPADA SEGNALAZIONE BLOCCO TERMICO	INDICATOR LIGHT FOR MOTOR THERMAL CUTOUT
	LTA	3	LAMPADA SEGNALAZIONE TRASFORMATORE DI ACCENSIONE	IGNITION TRANSFORMER INDICATOR LIGHT
	LTP	2	LAMPADA SEGNALAZIONE BLOCCO TERMICO POMPA	INDICATOR LIGHT FOR PUMP OVERLOAD TRIPPED
	LTRSA	2	LAMPADA SEGNALAZIONE BLOCCO TERMOSTATO DI SICUREZZA [TRSA]	INDICATOR LIGHT FOR [TRSA] SAFETY THERMOSTAT
	LTRSB	2	LAMPADA SEGNALAZIONE BLOCCO TERMOSTATO DI SICUREZZA [TRSB]	INDICATOR LIGHT FOR [TRSB] SAFETY THERMOSTAT
	MP	1	MOTORE POMPA NAFTA	OIL PUMP MOTOR
	MV	1	MOTORE VENTILATORE	FAN MOTOR
	PA	2	PRESSOSTATO ARIA	AIR PRESSURE SWITCH
	PGP	2	PRESSOSTATO PILOTA GAS	PILOT MINIMUM GAS PRESSURE SWITCH
	PS	2	PULSANTE SBLOCCO FIAMMA	LOCK-OUT RESET BUTTON
(x)	RA	1	RESISTENZE AUSILIARIE	AUXILIARY RESISTORS
(x)	RF	1	RESISTENZA AUSILIARIA FILTRO NAFTA	OIL FILTER AUXILIARY RESISTOR
	RPA	1	RESISTENZE PRERISCALDATORE NAFTA	PRE-HEATING TANK RESISTORS
	RPB	1	RESISTENZE PRERISCALDATORE NAFTA	PRE-HEATING TANK RESISTORS
	SIEMENS LAL 2.25	2	APPARECCHIATURA CONTROLLO FIAMMA	CONTROL BOX
	SQM10	4	SERVOCOMANDO SERRANDA ARIA	AIR DAMPER ACTUATOR
	ST	2	SERIE TERMOSTATI/PRESSOSTATI	SERIES OF THERMOSTATS OR PRESSURE SWITCHES
	TA	3	TRASFORMATORE DI ACCENSIONE	IGNITION TRANSFORMER
	TAB	4	TERMOSTATO/PRESSOSTATO ALTA-BASSA FIAMMA	HIGH-LOW THERMOSTAT/PRESSURE SWITCHES
	TCI	4	TERMOSTATO CONSENSO IMPIANTO	PLANT CONSENT THERMOSTAT
	TCNA	2	TERMOSTATO CONSENSO NAFTA PRERISCALDATORE [RPA]	OIL CONSENT THERMOSTAT FOR PRE- HEATING [RPA] RESISTORS
	TCNB	2	TERMOSTATO CONSENSO NAFTA PRERISCALDATORE [RPB]	OIL CONSENT THERMOSTAT FOR PRE- HEATING [RPB] RESISTORS
	TP	1	TERMICO MOTORE POMPA	PUMP MOTOR THERMAL
	TRA	2	TERMOSTATO DI REGOLAZIONE PRERISCALDATORE [RPA]	REGULATION THERMOSTAT FOR PRE-HEATING [RPA] RESISTORS
	TRB	2	TERMOSTATO DI REGOLAZIONE PRERISCALDATORE [RPB]	REGULATION THERMOSTAT FOR PRE-HEATING [RPB] RESISTORS
	TRSA	2	TERMOSTATO DI SICUREZZA PRERISCALDATORE [RPA]	PRE-HEATING [RPA] A SAFETY THERMOSTAT
	TRSB	2	TERMOSTATO DI SICUREZZA PRERISCALDATORE [RPB]	PRE-HEATING [RPB] A SAFETY THERMOSTAT
	TV	1	TERMICO MOTORE VENTILATORE	FAN MOTOR THERMAL
	[SQM40.265A]	4	SERVOCOMANDO SERRANDA ARIA (ALTERNATIVO)	AIR DAMPER ACTUATOR (ALTERNATIVE)

(x)

UTILIZZATO SOLO PER VERSIONI "NAFTA 110 cSt a 50 °C" E "NAFTA 400 cSt a 50 °C"

USED FOR "OIL 110 cSt a 50 °C " AND "OIL400 cSt a 50 °C " VERSIONS ONLY

Data 13/05/2009	PREC.	FOGLIO
Revisione 02	6	7
Dis. N. 12 – 154	SEGUE	TOTALE
	/	7