KTP1030
KTP1050
KTP1080

Progressive and fully-modulating gas - heavy oil dual fuel burners

MANUAL OF INSTALLATION - USE - MAINTENANCE

CIB UNIGAS

BURNERS - BRUCIATORI - BRULERS - BRENNER - QUEMADORES - ГОРЕЛКИ

M039207CB Rev. 1 05/2008

WARNINGS

THIS MANUAL IS SUPPLIED AS AN INTEGRAL AND ESSENTIAL PART OF THE PRODUCT AND MUST BE DELIVERED TO THE USER.

INFORMATION INCLUDED IN THIS SECTION ARE DEDICATED BOTH TO THE USER AND TO PERSONNEL FOLLOWING PRODUCT INSTALLATION AND MAINTENANCE.

THE USER WILL FIND FURTHER INFORMATION ABOUT OPERATING AND USE RESTRICTIONS, IN THE SECOND SECTION OF THIS MANUAL. WE HIGHLY RECOMMEND TO READ IT.

CAREFULLY KEEP THIS MANUAL FOR FUTURE REFERENCE..

1) GENERAL INTRODUCTION

- The equipment must be installed in compliance with the regulations in force, following the manufacturer's instructions, by qualified personnel.
- Qualified personnel means those having technical knowledge in the field of components for civil or industrial heating systems, sanitary hot water generation and particularly service centres authorised by the manufacturer.
- Improper installation may cause injury to people and animals, or damage to property, for which the manufacturer cannot be held liable.
- Remove all packaging material and inspect the equipment for integrity.

In case of any doubt, do not use the unit - contact the supplier.

The packaging materials (wooden crate, nails, fastening devices, plastic bags, foamed polystyrene, etc), should not be left within the reach of children, as they may prove harmful.

- Before any cleaning or servicing operation, disconnect the unit from the mains by turning the master switch OFF, and/or through the cut-out devices that are provided.
- Make sure that inlet or exhaust grilles are unobstructed.
- In case of breakdown and/or defective unit operation, disconnect the unit. Make no attempt to repair the unit or take any direct action.

Contact qualified personnel only.

Units shall be repaired exclusively by a servicing centre, duly authorised by the manufacturer, with original spare parts.

Failure to comply with the above instructions is likely to impair the unit's safety.

To ensure equipment efficiency and proper operation, it is essential that maintenance operations are performed by qualified personnel at regular intervals, following the manufacturer's instructions.

- When a decision is made to discontinue the use of the equipment, those parts likely to constitute sources of danger shall be made harmless.
- In case the equipment is to be sold or transferred to another user, or in case the original user should move and leave the unit behind, make sure that these instructions accompany the equipment at all times so that they can be consulted by the new owner and/or the installer.
- For all the units that have been modified or have options fitted then original accessory equipment only shall be used.
- This unit shall be employed exclusively for the use for which it is meant. Any other use shall be considered as improper and, therefore, dangerous.

The manufacturer shall not be held liable, by agreement or otherwise, for damages resulting from improper installation, use and failure to comply with the instructions supplied by the manufacturer.

2) SPECIAL INSTRUCTIONS FOR BURNERS

- The burner should be installed in a suitable room, with ventilation openings complying with the requirements of the regulations in force, and sufficient for good combustion.
- Only burners designed according to the regulations in force should be used.
- This burner should be employed exclusively for the use for which it was designed.
- Before connecting the burner, make sure that the unit rating is the same as delivery mains (electricity, gas oil, or other fuel).
- Observe caution with hot burner components. These are, usually, near to the flame and the fuel pre-heating system, they become hot during the unit operation and will remain hot for some time after the burner has stopped.

When the decision is made to discontinue the use of the burner, the user shall have qualified personnel carry out the following operations:

a Remove the power supply by disconnecting the power cord from the mains.

b) Disconnect the fuel supply by means of the hand-operated shut-off valve and remove the control handwheels from their spindles.

Special warnings

- Make sure that the burner has, on installation, been firmly secured to the appliance, so that the flame is generated inside the appliance firebox.
- Before the burner is started and, thereafter, at least once a year, have qualified personnel perform the following operations:

a set the burner fuel flow rate depending on the heat input of the appliance;

b set the flow rate of the combustion-supporting air to obtain a combustion efficiency level at least equal to the lower level required by the regulations in force;

c check the unit operation for proper combustion, to avoid any harmful or polluting unburnt gases in excess of the limits permitted by the regulations in force;

d make sure that control and safety devices are operating properly;

e make sure that exhaust ducts intended to discharge the products of combustion are operating properly;

f on completion of setting and adjustment operations, make sure that all mechanical locking devices of controls have been duly tightened;

g make sure that a copy of the burner use and maintenance instructions is available in the boiler room.

- In case of repeated burner shut-downs, do not continue re-setting the unit manually. Contact qualified personnel to take care of such defects.
- The unit shall be operated and serviced by qualified personnel only, in compliance with the regulations in force.

3) GENERAL INSTRUCTIONS DEPENDING ON FUEL USED

3a) ELECTRICAL CONNECTION

- For safety reasons the unit must be efficiently earthed and installed as required by current safety regulations.
- It is vital that all saftey requirements are met. In case of any doubt, ask for an accurate inspection of electrics by qualified personnel, since the manufacturer cannot be held liable for damages that may be caused by failure to correctly earth the equipment.
- Qualified personnel must inspect the system to make sure that it is adequate to take the maximum power used by the equipment shown on the equipment rating plate. In particular, make sure that the system cable cross section is adequate for the power absorbed by the unit.
- No adaptors, multiple outlet sockets and/or extension cables are permitted to connect the unit to the electric mains.
- An omnipolar switch shall be provided for connection to mains, as required by the current safety regulations.
- The use of any power-operated component implies observance of a few basic rules, for example:

© do not touch the unit with wet or damp parts of the body and/or with bare feet;

© do not pull electric cables;

© do not leave the equipment exposed to weather (rain, sun, etc.) unless expressly required to do so;

© do not allow children or inexperienced persons to use equipment;

- The unit input cable shall not be replaced by the user.

In case of damage to the cable, switch off the unit and contact qualified personnel to replace.

When the unit is out of use for some time the electric switch supplying all

the power-driven components in the system (i.e. pumps, burner, etc.) should be switched off.

3b) FIRING WITH GAS, LIGHT OIL OR OTHER FUELS

GENERAL

- The burner shall be installed by qualified personnel and in compliance with regulations and provisions in force; wrong installation can cause injuries to people and animals, or damage to property, for which the manufacturer cannot be held liable.
- Before installation, it is recommended that all the fuel supply system pipes be carefully cleaned inside, to remove foreign matter that might impair the burner operation.
- Before the burner is commissioned, qualified personnel should inspect the following:

a the fuel supply system, for proper sealing;
b the fuel flow rate, to make sure that it has been set based on the firing rate required of the burner;
c the burner firing system, to make sure that it is supplied for the designed fuel type;
d the fuel supply pressure, to make sure that it is included in the range shown on the rating plate;
e the fuel supply system, to make sure that the system dimensions are adequate to the burner firing rate, and that the system is equipped with all the safety and control devices required by the regulations in force.

- When the burner is to remain idle for some time, the fuel supply tap or taps should be closed.

SPECIAL INSTRUCTIONS FOR USING GAS

Have qualified personnel inspect the installation to ensure that:

a the gas delivery line and train are in compliance with the regulations and provisions in force;
b all gas connections are tight;
c the boiler room ventilation openings are such that they ensure the air supply flow required by the current regulations, and in any case are sufficient for proper combustion.

- Do not use gas pipes to earth electrical equipment.
- Never leave the burner connected when not in use. Always shut the gas valve off.
- In case of prolonged absence of the user, the main gas delivery valve to the burner should be shut off.

Precautions if you can smell gas

a do not operate electric switches, the telephone, or any other item likely to generate sparks;
b immediately open doors and windows to create an air flow to purge the room;
c close the gas valves;
d contact qualified personnel.

- Do not obstruct the ventilation openings of the room where gas appliances are installed, to avoid dangerous conditions such as the development of toxic or explosive mixtures.

DIRECTIVES AND STANDARDS

Gas burners

European directives:
- Directive 90/396/CEE - Gas Appliances;
- Directive 2006/95/EC on low voltage;
- Directive 2004/108/CEE on electromagnetic compatibility

Harmonised standards :
-UNI EN 676 (Gas Burners;
-CEI EN 60335-1(Household and similar electrical appliances - Safety. Part 1: General requirements;
- EN 50165 (Electrical equipment of non-electric appliances for household and similar purposes. Safety requirements.

Light oil burners

European directives:
- Directive 2006/95/EC on low voltage;
- Directive 2004/108/CEE on electromagnetic compatibility

Harmonised standards :
-CEI EN 60335-1(Household and similar electrical appliances - Safety. Part 1: General requirements;
- EN 50165 (Electrical equipment of non-electric appliances for household and similar purposes. Safety requirements.

National standards :
-UNI 7824: Monobloc nebulizer burners for liquid fuels. Characteristics and test methods

Heavy oil burners

European directives:
- Directive 2006/95/EC on low voltage;
- Directive 2004/108/CEE on electromagnetic compatibility

Harmonised standards :
-CEI EN 60335-1 Household and similar electrical appliances - SafetyPart 1: General requirements;
- EN 50165 Electrical equipment of non-electric appliances for household and similar purposes. Safety requirements.

National standards :
-UNI 7824: Monobloc nebulizer burners for liquid fuels. Characteristics and test methods

Gas - Light oil burners

European directives:
- Directive 90/396/CEE Gas Appliances;
- Directive 2006/95/EC on low voltage;
- Directive 2004/108/CEE on electromagnetic compatibility

Harmonised standards :
-UNI EN 676 Gas Burners
-CEI EN 60335-1(Household and similar electrical appliances - Safety. Part 1: General requirements;
- EN 50165 Electrical equipment of non-electric appliances for household and similar purposes. Safety requirements.

National standards :
-UNI 7824: Monobloc nebulizer burners for liquid fuels. Characteristics and test methods

Gas - Heavy oil burners

European directives:
- Directive 90/396/CEE - Gas Appliances;
- Directive 2006/95/EC on low voltage;
- Directive 2004/108/CEE on electromagnetic compatibility

Harmonised standards :
-UNI EN 676 (Gas Burners;
-CEI EN 60335-1(Household and similar electrical appliances - Safety. Part 1: General requirements;
- EN 50165 Electrical equipment of non-electric appliances for household and similar purposes. Safety requirements.

National standards :
-UNI 7824: Monobloc nebulizer burners for liquid fuels. Characteristics and test methods

PART I: INSTALLATION MANUAL

GENERAL FEATURES

This series of industrial burners is designed for all those applications that require big-sized air fans or air-flue heat exchangers to be installed in sound-proof areas to reduce noise. They can be provided with built-in or separately-mounted control panel (console or wall-mounted).

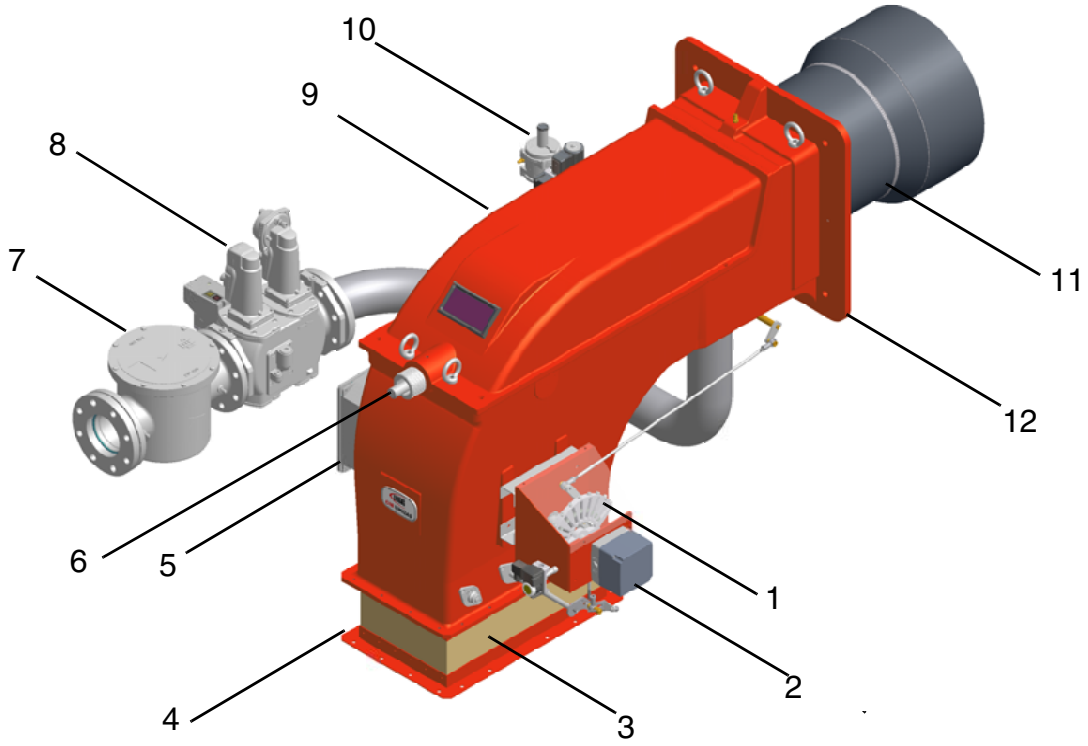

Fig. 1

1 Adjusting cam
2 Actuator
3 Bellows
4 Air inlet flange
5 Junction box
6 Combustion head adjusting screw
7 Gas filter
8 Gas valves group
9 Cover
10 Ignitor gas train
11 Combustion head-blast tube group
12 Burner flange

Gas operation: the gas coming from the supply line, passes through the valves group provided with filter and stabiliser. This one forces the pressure in the utilisation limits. The actuator (2) moves proportionally the air damper and the gas butterfly valve It drives an adjusting cam (13) with variable shape. This one allows the optimisation of the gas flue values, as to get an efficient combustion.

Heavy oil operation:the fuel coming from the supply line, is pushed by the pump to the nozzle and then into the combustion chamber, where the mixture between fuel and air takes place and consequently the flame.

In the burners, the mixture bertween fuel and air, to perform clean and efficient combustion, is activated by atomisation of oil into very small particles. This process is achieved making pressurised oil passing through the nozzle.

The pump main function is to transfer oil from the tank to the nozzle in the desired quantity and pressure. To adjust this pressure, pumps are provided with a pressure regulator (except for some models for which a separate regulating valve is provided). Other pumps are provided with two pressure governors: one for the high and one for low pressure (in double-stage systems with one nozzle).

The adjustable combustion head can improve the burner performance. The combustion head determines the energetic quality and the geometry of the flame. Fuel and comburent are routed into separated ways as far as the zone of flame generation (combustion chamber).

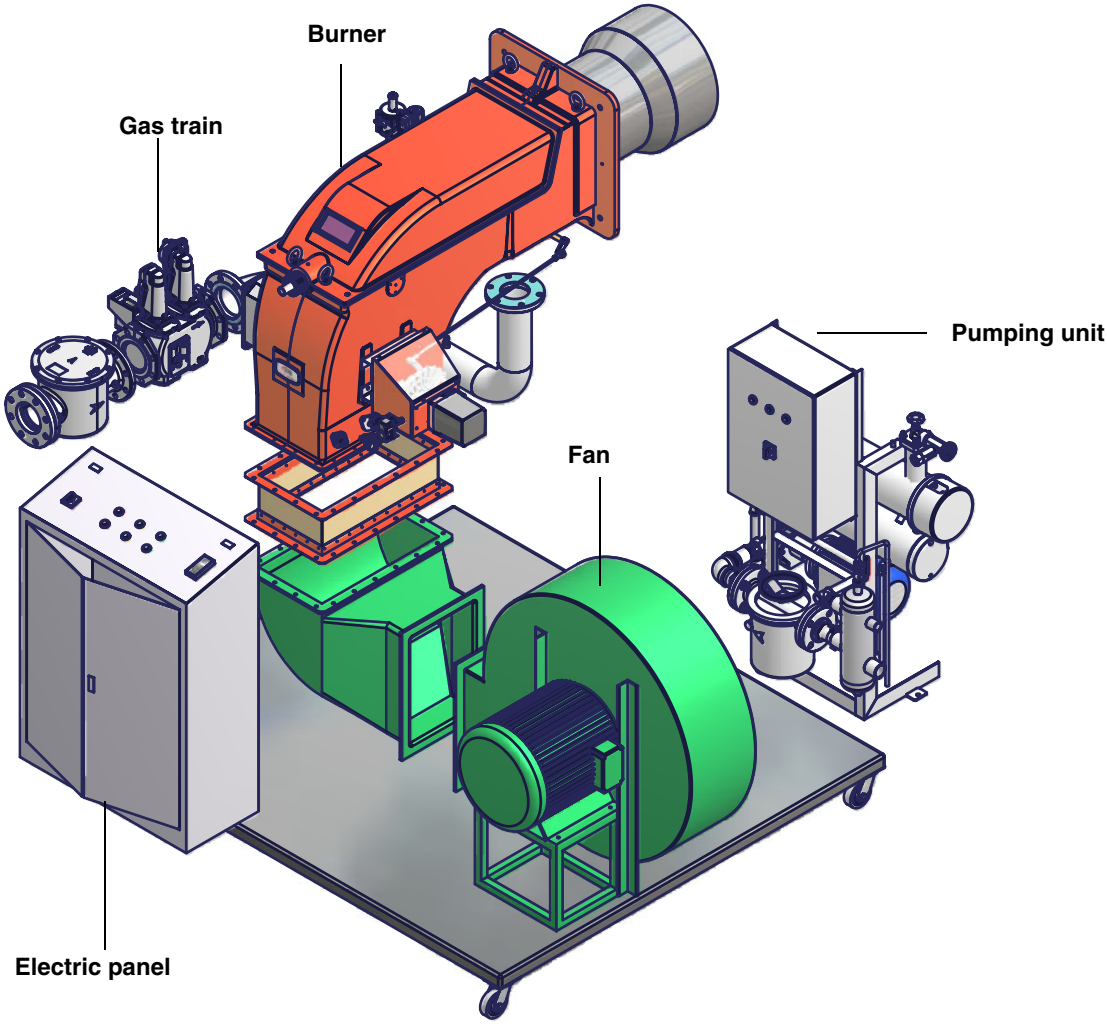

Note: the picture shows one of the possible installations. Fan, electrical panel and pumping unit can be placed according to the customer needs.

How to choose the burner

To check if the burner is suitable for the boiler to which it must be installled, the following parameters are needed:

- fuel
- furnace input, in kW or kcal/h (kW = kcal/h / 860);
- boiler type;
- combustione head type (reverse flame or three phase)'
- temperature or pressure of the thermal carrier fluid
- Comburent air temperature
- Air duct positioning
- Pressure in the combustion chamber
- Elevation (altitude) of burner installation
- Gas train (only for gas burners)
- Pumping unit (only for light-oil or heavy-oil burners)
- Air fan
- Bilt-in or separated control panel
- backpressure (data are available on the boiler's ID plate or in the user's manual).

Burners provided with built-in control panel are designed for IP40 index of protection. For other values of IP, please contact the manifacturer Technical Dpt.

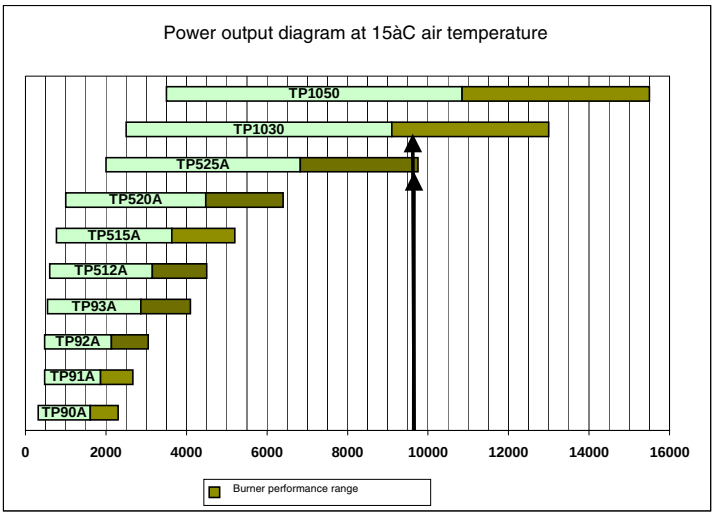

Data requested:

- furnace input;
- air temperature
- altitude
- generator pressure or temperature

Example:

- furnace input: 9600kW
- air temperature: 15°C
- altitude: 0m

Fig. 2

See the diagram in Fig. 2, as to find the burners that better suite the power range requested in the exmple (9600kW). Once the models are founded out, the choice regards technical and economical features. Technical features can be summarised in a higher modulation ratio (fewer start-ups, less consumption, fewer swigings in the generator temperature and pressure values.

Checking the proper gas train size

To check the proper gas train size, it is necessary to the available gas pressure value upstream the burner's gas valve. Then subtract the backpressure. The result is called **p_{gas}**. Draw a vertical line matching the furnace input value (600kW, in the example), quoted on the x-axis, as far as intercepitng the network pressure curve, according to the installed gas train (DN65, in the example). From the interception point, draw an horizontal line as far as matching, on the y-axis, the value of pressure necessary to get the requested furnace input. This value must be lower or equal to the **p_{gas}** value, calculated before.

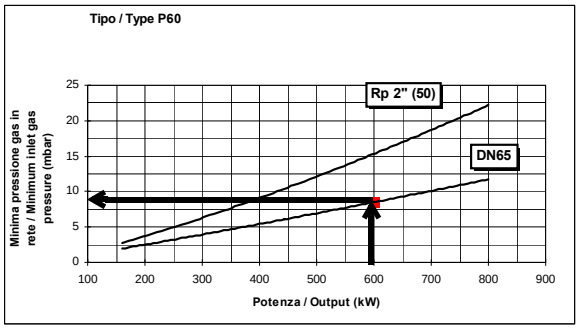

Fig. 3

Burner model identification

Burners are identified by burner type and model. Burner model identification is described as follows.

Type **KTP1030** (1)	Model **MN. PR. S. *. A. 1. 80** (2) (3) (4) (5) (6) (7) (8)
(1) BURNER TYPE	**KTP1030 - KTP1050 - TP1080**
(2) FUEL	MN - Dual fuel gas-heavy oil Heavy oil, standard viscosity <= 7° E @ 50° C MD - Dual fuel gas-heavy oil <= 50° E @ 50° C ME - Natural gas - ecological heavy oil between 7° and 15° at 50°C
(3) OPERATION (Available versions)	PR - Progressive MD - Fully modulating
(4) BLAST TUBE	S - Standard
(5) DESTINATION COUNTRY	* - see data plate
(6) BURNER VERSION	A - Standard Y - Special
(7) EQUIPMENT	1 = 2 valves + gas proving system 8 = 2 valves + gas proving system + high gas pressure switch
(8) GAS CONNECTION	80 = DN80 100 = DN100 125 = DN125

Technical specifications

BURNER TYPE		**KTP1030**	**KTP1050**	**TP1080**
Output	min - max kW	2550-13300	3500-15500	4500-19000
Fuel		Natural gasHeavy oil -		
Category		(see next paragraph)		
Gas rate	min.-max. (Stm^3/h)	270-1376	370-1641	476-2010
Viscosity	°E, 50 °C	50		
Heavy oil rate	min. - max. kg/h	227 - 1158	312 - 1381	401- 1693
Power supply		400V 3N~ 50Hz		
Pump motor	kW	5.5	5.5	5.5
Pre-heating resistors	kW	24+24	24+24	24+24
Total power consumption	kW	54		
Protection		IP40		
Operation		Progressive - Fully modulating		
Pressure		(see Note 2)		
Gas train 80	ØValves - Connection	80 / DN80		
Gas train 100	ØValves - Connection	100 / DN100		
Gas train 125	ØValves - Connection	125 / DN125		
Weight	kg	300		
Operating temperature	°C	-10 ÷ +50		
Storage Temperature	°C	-20 ÷ +60		
Working service*		Internittent		

Note1:	**all gas flow rates are referred to Stm^3/h (1013 mbar absolute pressure, 15 °C temperature) and are valid for G20 natural gas (net calorific value H_i = 34.02 MJ/Stm^3).**
Note2:	**Maximum gas pressure = 500mbar (with Siemens VGD gas valves).** **Minimum gas pressure = see gas curves.**

***NOTE ON THE BURNER WORKING SERVICE:** for safety reasons, one controlled shutdown must be performed every 24 hours of continuous operation.

Country and usefulness gas categories

GAS CATEGORY	**COUNTRY**																								
I_{2H}	AT	ES	GR	SE	FI	IE	HU	IS	NO	CZ	DK	GB	IT	PT	CY	EE	LV	SI	MT	SK	BG	LT	RO	TR	CH
I_{2E}	LU	PL	-	-	-	-	-	-	-	-	-	-	-	-	-	-	-	-	-	-	-	-	-	-	-
$I_{2E(R)B}$	BE	-	-	-	-	-	-	-	-	-	-	-	-	-	-	-	-	-	-	-	-	-	-	-	-
I_{2L}	NL	-	-	-	-	-	-	-	-	-	-	-	-	-	-	-	-	-	-	-	-	-	-	-	-
I_{2ELL}	DE	-	-	-	-	-	-	-	-	-	-	-	-	-	-	-	-	-	-	-	-	-	-	-	-
I_{2Er}	FR	-	-	-	-	-	-	-	-	-	-	-	-	-	-	-	-	-	-	-	-	-	-	-	-

Overall dimensions (mm)Overall dimensions (mm)

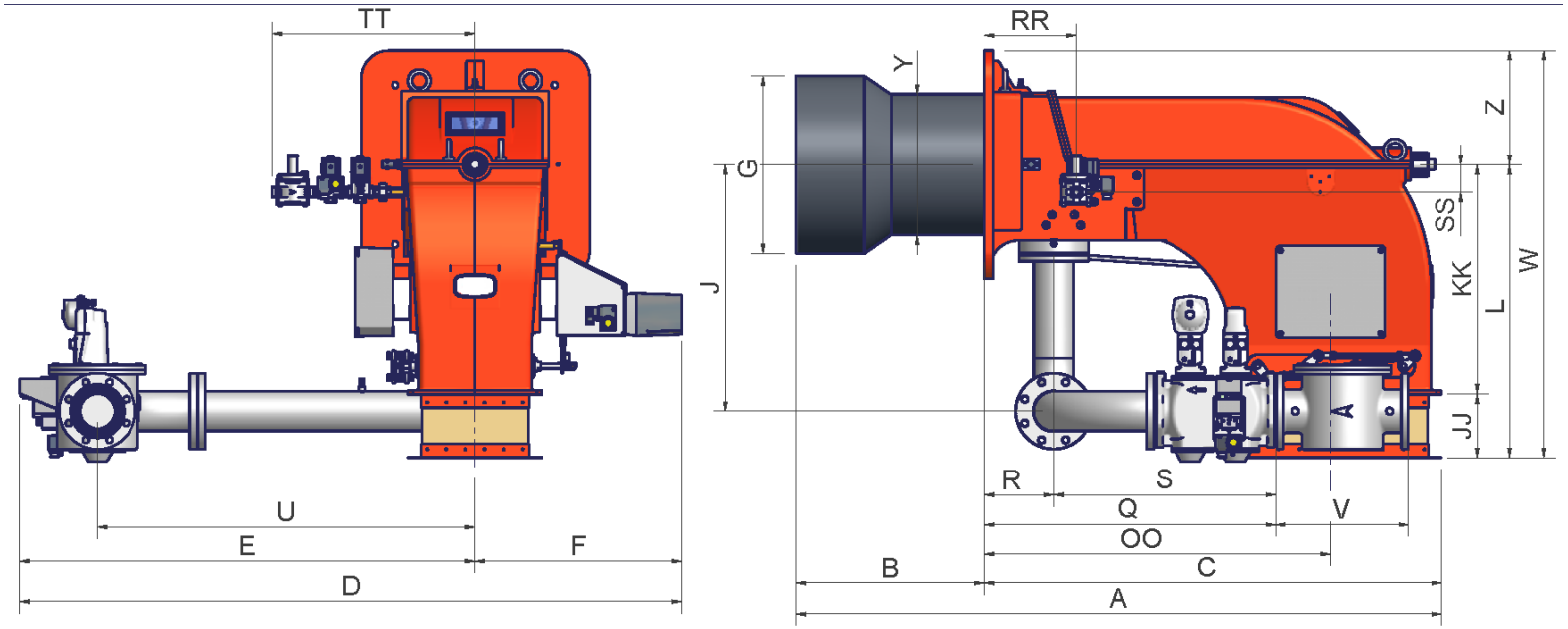

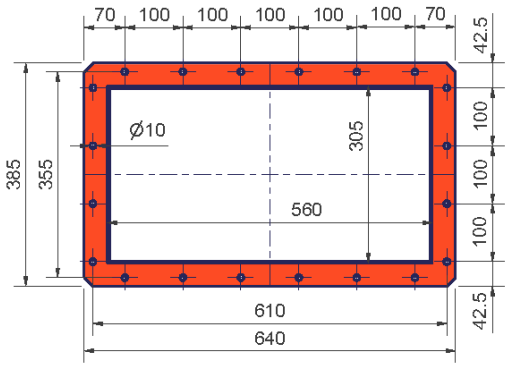

Air inlet flange

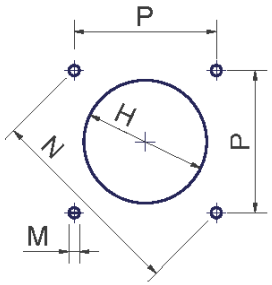

Boiler drilling plate

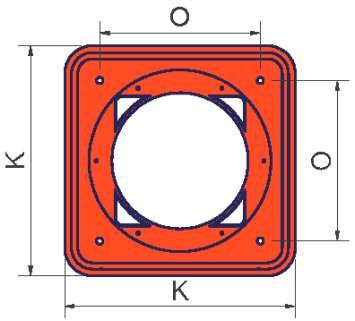

Burner flange

NOTE: the overall dimensions are referred to burners provided with Siemens VGD valves.

	DN	A	B	C	CC	D	E	F	G	H	J	JJ	K	KK	L	M	N	O	OO	P	Q	R	RR	S	SS	TT	U	V	W	Y	Z
KTP1030	80	1864	544	1320	348	1898	1301	597	464	504	710	185	660	660	845	M16	651	460	1000	460	936	200	265	736	80	587	1092	322	1175	372	330
KTP1030	100	1864	544	1320	348	1914	1317	597	464	504	710	185	660	660	845	M16	651	460	1000	460	842	200	265	642	80	587	1092	382	1175	372	330
KTP1050	80	1864	544	1320	348	1898	1301	597	489	539	710	185	660	660	845	M16	651	460	1000	460	936	200	265	736	80	587	1092	322	1175	408	330
KTP1050	100	1864	544	1320	348	1914	1317	597	489	539	710	185	660	660	845	M16	651	460	1000	460	842	200	265	642	80	587	1092	382	1175	408	330
KTP1080	100	1864	544	1320	348	1914	1317	597	514	564	710	185	660	660	845	M16	651	460	1000	460	842	200	265	642	80	587	1092	382	1175	408	330
KTP1080	125	1864	544	1320	348	1946	1349	597	514	564	710	185	660	660	845	M16	651	460	1000	460	954	200	265	754	80	587	1192	480	1175	408	330

Performance curves

KTP1030

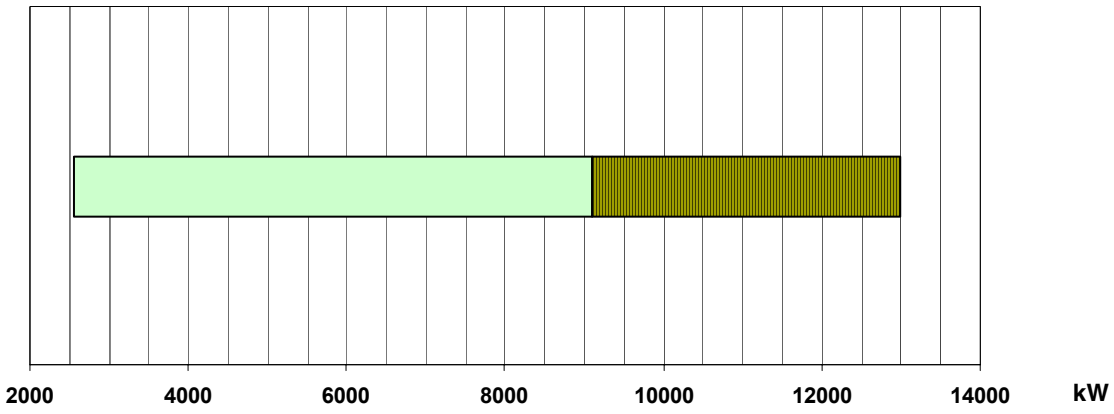

KTP1050

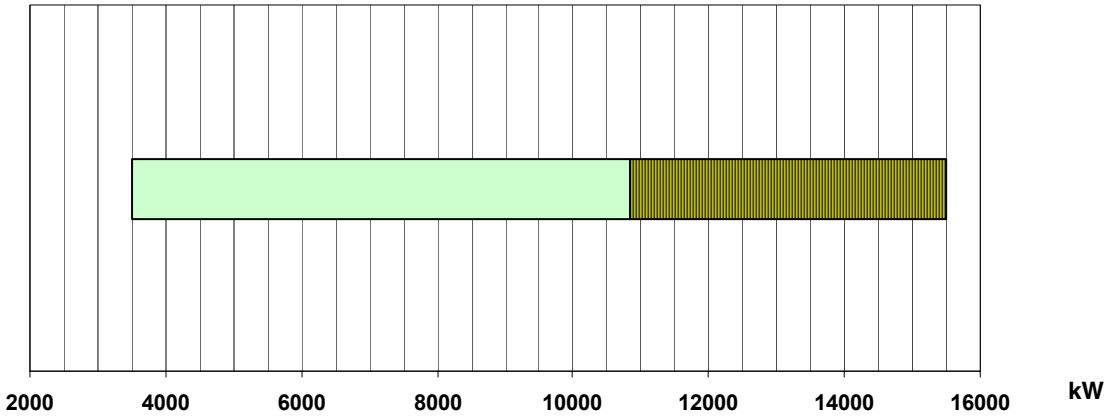

KTP1080

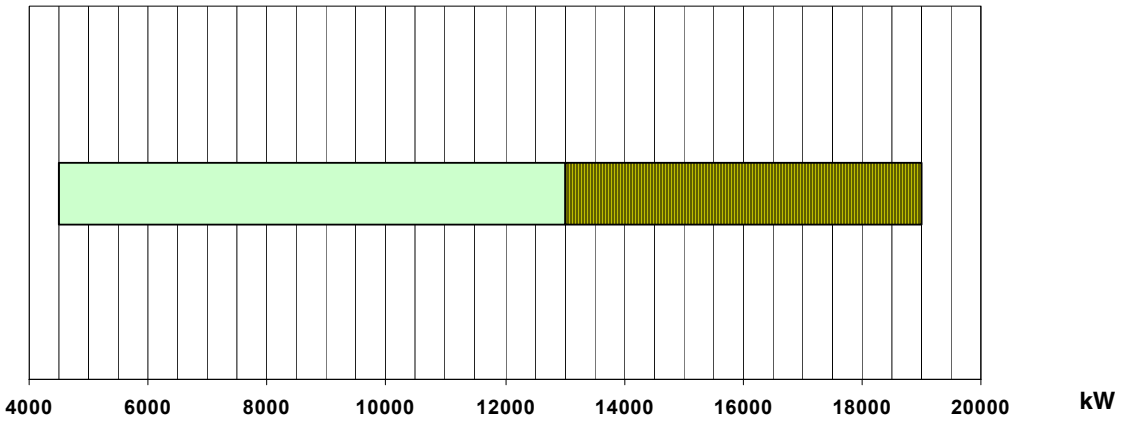

Performance range

To get the input in kcal/h, multiply value in kW by 860.
Data are referred to standard conditions: 1013mbar, 15°C.

Pressure in the network / gas rate curves

KTP1030

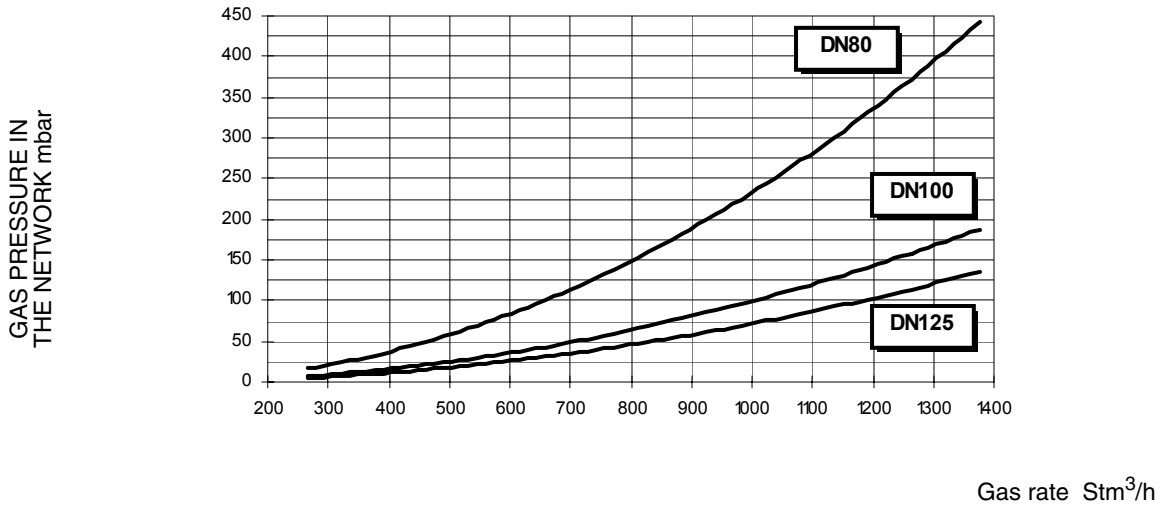

KTP1050

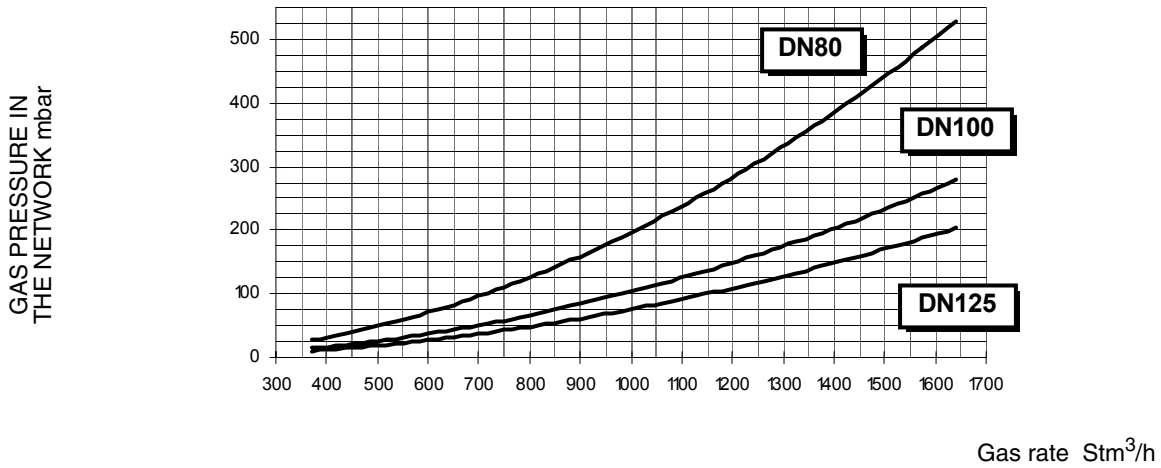

KTP1080

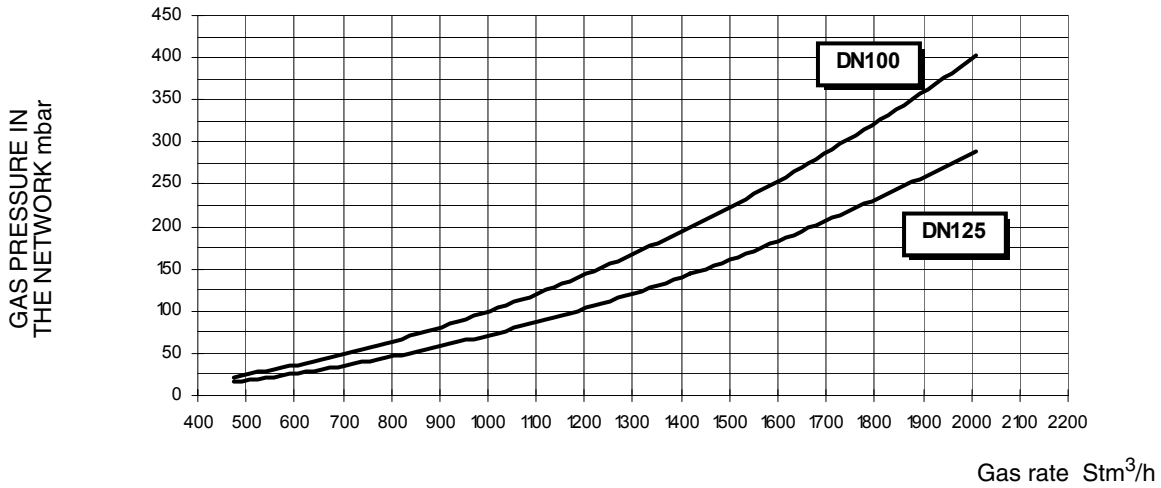

INSTALLATION

Packing

The burners are despatched in wodden crates whose dimensions are:

KTP1030 - KTP1050: 2180mm x 1180mm x 1210mm (L x P x H**)**

KTP1080: 2180mm x 1580mm x 1560mm (L x P x H)

Packing cases of this type are affected by humidity and are not suitable for stacking.

In each packing case, find:

1 burner with gas train detached;

1 gasket to be inserted between the burner and the boiler;

2 flexible oil pipes;

1 oil filter;

1 envelope containing this manual

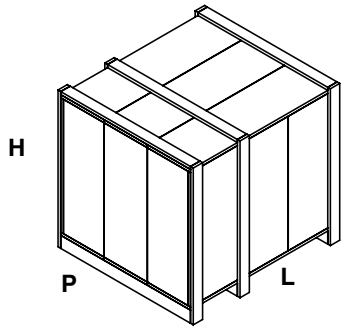

To get rid of the burner's packing, follow the procedures laid down by current laws on disposal of materials.

Handling the burner

⚠	**ATTENTION! Handling operations must be performed by trained personnel specialised on handling loads. If these operations are not carried out correctly, the residual risk for the machine to overturn and fall down remains.**
	To handle the machine, use means suitable to handle requested loads (see par. "Technical specifications")."

The burner is provided with eye-bolts for lifting.

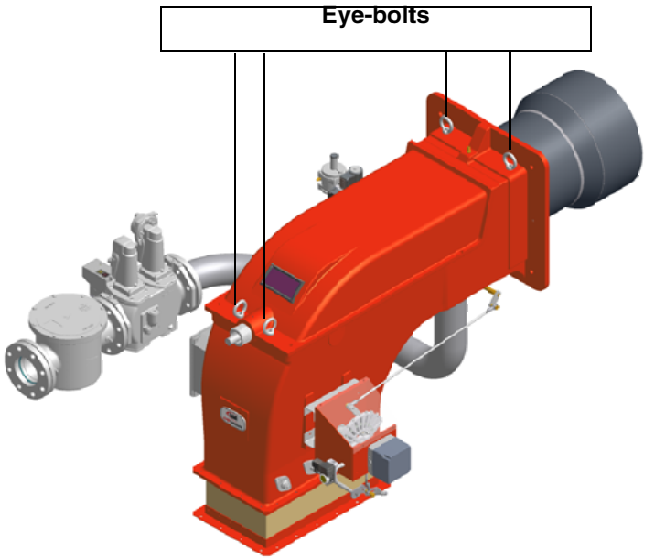

Fitting the burner to the boiler

1 To perform the installation, it is necessary to drill the boiler door as described on paragraph “Overall dimensions”;
2 screw the studbolts (5) on the boiler door, according to the drilling plate (see paragraph “Overall dimensions”);
3 move the burner towards the boiler: lift the burner by means of the eyebolts placed on its top side;
4 place the flange to the boiler and a gasket between them;
5 fit the glass fibre plait;
6 replace the blast tube: before fastening completely the screws, avoid any misalignement between the blast tube axis and the combustion head axis;
7 install the burner to the boiler;
8 fix the burner to the stud bolts, by means of the fixing nuts, according to Fig. 4.
9 After fitting the burner to the boiler, ensure that the gap between the blast tube and the refractory lining is sealed with appropriate insulating material (ceramic fibre cord or refractory cement).

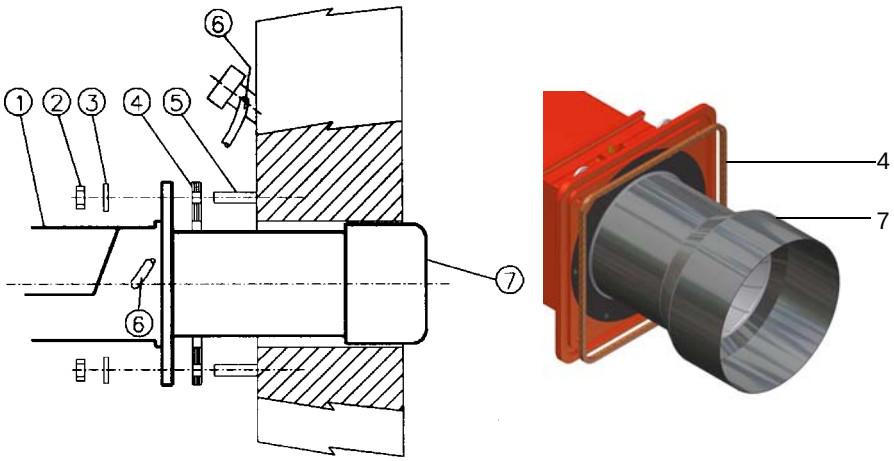

Fig. 4

Keys

1 Burner
2 Fixing nut
3 Washer
4 Gasket
5 Stud bolt
7 Blast tube

Fan installation

Pay attention when designing the air duct: dimensioning must be performed according to the flow rate, the temperature, the distance between the fan and the burner and according to the fan features as well.

⚠	**ATTENTION!** The bellows unit provided is made of canvas and is provided with blocking spacers to avoid breaking it during installation: **first** place the bellows unit between flanges, **then** remove the spacers. Canvas has to be stretched after the installation, but not stressed.

Matching the burner to the boiler

To correctly match the burner to the boiler verify the necessary input and the pressure in combustion chamber are included in the burner performance curve; otherwise the choice of the burner must be revised consulting the burner manufacturer.

To choose the blast tube lenght follow the instructions of the boiler manufacturer. In absence of these consider the following:

- Cast-iron boilers, three pass flue boilers (with the first pass in the rear part): the blast tube must protrude no more than 100 mm into the combustion chamber.
- Pressurised boilers with flame reversal: in this case the blast tube must penetrate at least 50 - 100 mm into combustion chamber in respect to the tube bundle plate.

The length of the blast tubes does not always allow this requirement to be met, and thus it may be necessary to use a suitably-sized spacer to move the burner backwards.

GAS TRAIN CONNECTIONS

The diagrams show the components of the gas trai included in the delivery and which must be fitted by the installer.The diagrams are in compliance with the current laws.

⚠	**ATTENTION:** BEFORE EXECUTING THE CONNECTIONS TO THE GAS PIPE NETWORK, BE SURE THAT THE MANUAL CUTOFF VALVES ARE CLOSED.

Gas train - 1 (DN80/100): Gas train with valves group VGD40 with built-in gas pressure governor + VPS504 gas proving system

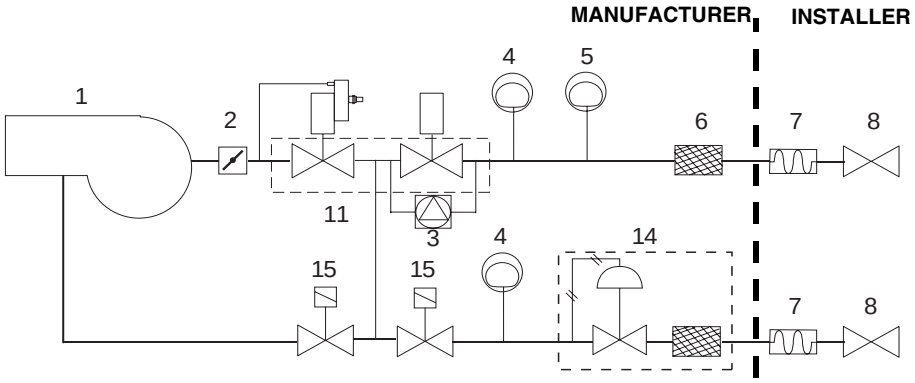

Gas train 2 (DN80/100): Gas train with valves group MBC 1900/3100/5000SE (2 valves + gas filter + pressure governor + pressure switch) + VPS504 gas proving system

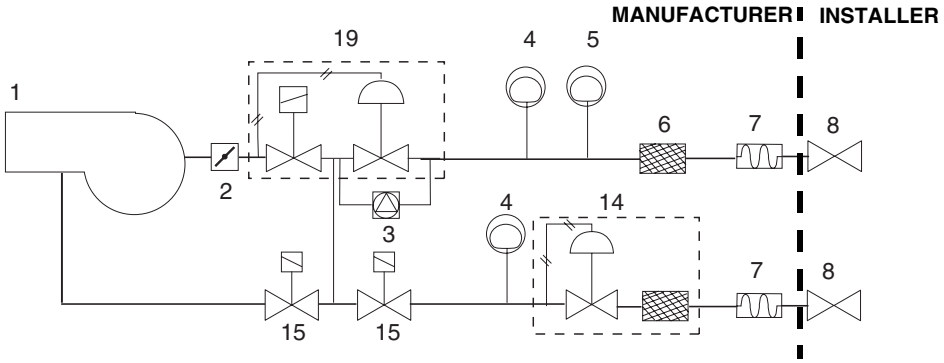

Gas train - 3: Gas train with valves group VGD 40 with built-in gas pressure governor + gas leakage pressure switch (PGCP) for Siemens LDU/LMV burner control

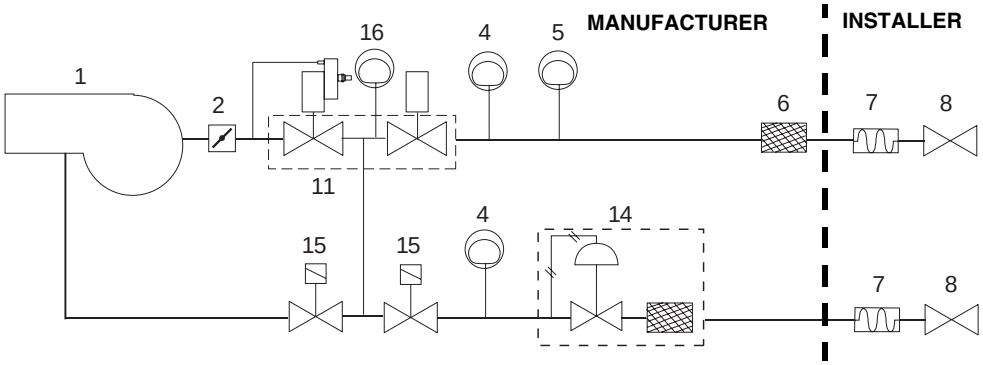

Key

1	Burner	8	Manual cutoff valve
2	Butterfly valve	11	VGD Valves group
3	Gas proving system	14	Pressure governor with filter
4	Low gas pressure switch	15	Ignitor gas valve
5	High gas pressure switch (option)	19	MBC Valves group (DN80/100)
6	Gas filter		
7	Bellow joint		

Connecting the pilot gas train

The pilot gas train is already installed to the burner, the following connections must be executed:

- connection from the filter with stabiliser to the gas supply network
- connection from the valve to the main gas train, by means of the pipe provided with the burner.

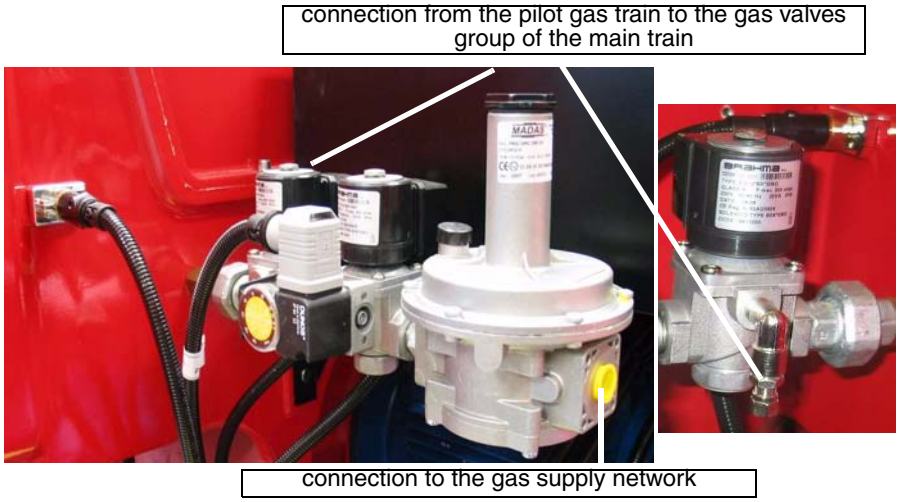

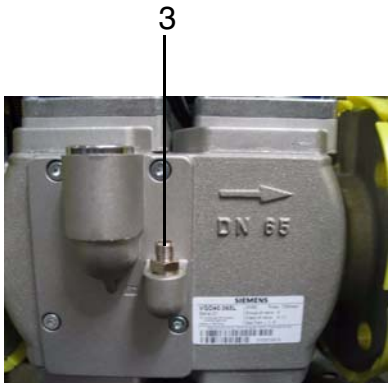

SIEMENS VGD40..

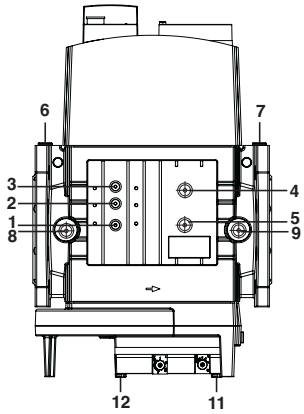

DUNGS MBC3100-5000SE

Fig. 5 - pipe port (3) for connecting the pilot gas train to the valves group of the main gas train

-

Assembling the gas train

To assemble the main gas train, proceed as follows:

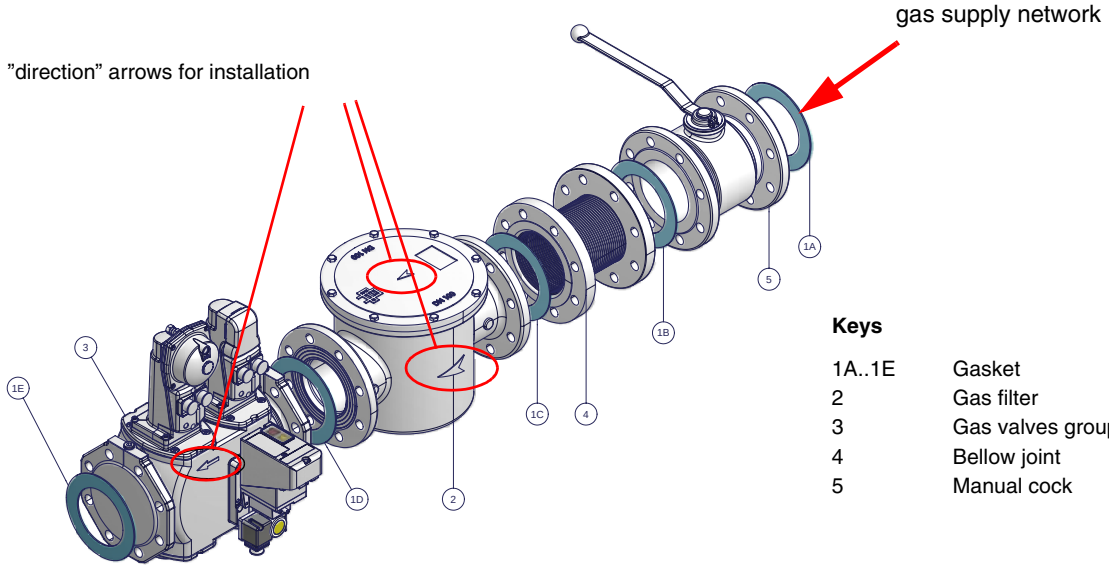

Keys

1A..1E	Gasket
2	Gas filter
3	Gas valves group
4	Bellow joint
5	Manual cock

Fig. 6 - Example of gas train

1) in case of flanged joints: place a gasket (no. 1A..1E - Fig. 6) between the elements

2) fasten all the items by means of screws, according to the shcemes shown before, obesrving the mounting direction for each item.

NOTE: the bellow joint, the manual valve and the gaskets are not part of the standard supply.

⚠	**ATTENTION:** once the gas train is mounted according to the diagram on Fig. 6, the gas proving test mus be performed, according to the procedure set by the laws in force.

The procedures of installation fo the gas valves are showed in the next paragraphs, according to the gas train used:

- flanged gas trains with Multibloc Dungs MBC..SE 1900-3100-5000 or Siemens VGD40.. (flanged valves group)

Siemens VGD20.. and VGD40.. gas valves - with SKP2.. (pressure stabiliser)

Mounting

- When mounting the VGD.. double gas valve, two flanges are required;
- to prevent cuttings from falling inside the valve, first fit the flanges to the piping and then clean the associated parts;
- install the valve;
- the direction of gas flow must be in accordance with the direction of the arrow on the valve body;
- ensure that the bolts on the flanges are properly tightened;
- ensure that the connections with all components are tight;
- make certain that the O-rings and gaskets between the flanges and the double gas valve are fitted.
- Connect the reference gas pipe (**TP** in figure), to the gas pressure nipples placed on the gas pipe, downstream the gas valves: gas pressure must be measured at a distance that must be at least 5 times the pipe size .

Leave the blowhole free (**SA** in figure). Should the spring fitted not permit satisfactory regulation, ask one of our service centres for a suitable replacement.

⚠ **WARNING: removing the four screws BS causes the device to be unserviceable!**

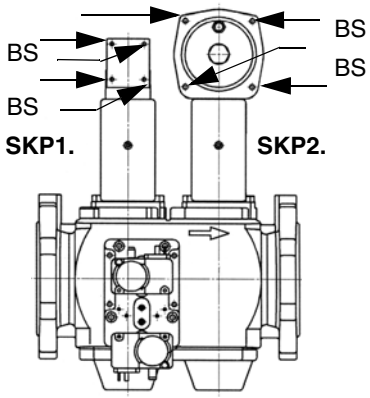

Fig. 7

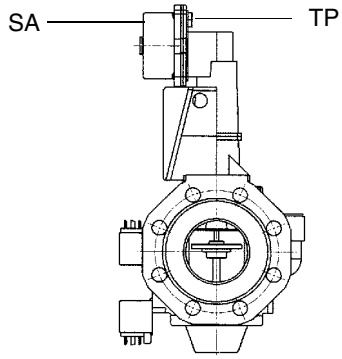

Fig. 8

.MOUNTING POSITIONS

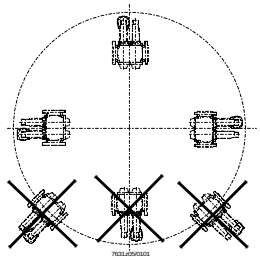

Fig. 9

MULTIBLOC DUNGS MBC1900-3100-5000SE (Flanged valves group)

Mounting

1. Insert setscrews A
2. Insert seals
3. Insert setscrews B
4. Tighten setscrews A + B.

Ensure correct seating of the seal!

6. After installation, perform leakage and functional test.
7. Disassembly in reverse order.

Mounting positions

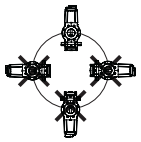

OPTION

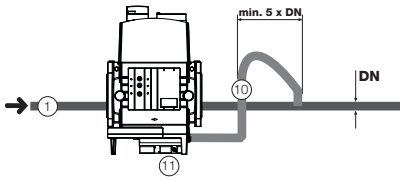

10 = pulse lines

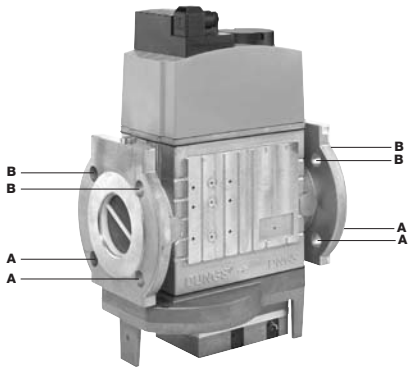

Fig. 10

Pressure adjusting range

The pressure adjusting range, upstream the gas valves group, changes according to the spring provided with the valve group.

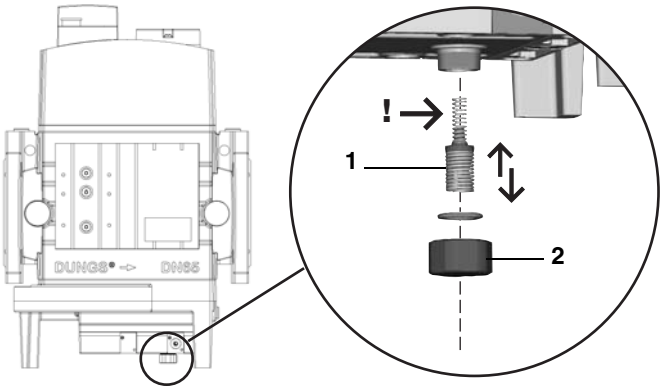

DUNGS MBC..SE

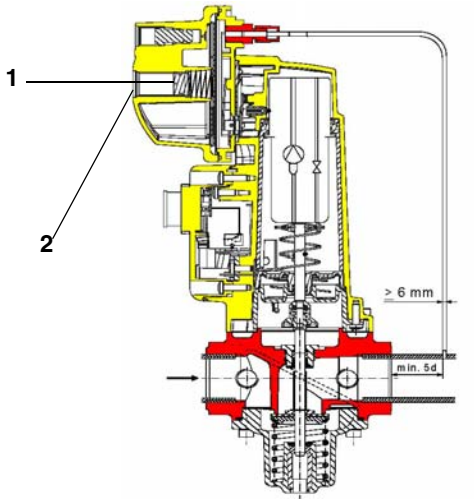

Siemens SKP actuator

Keys

1 spring

2 cap

DUNGS MBC valves:

Performance range (mbar)	4 - 20	20 - 40	40 - 80	80 - 150
Spring colour	-	ed	black	green

Siemens VGD valves with SKP actuator:

Performance range (mbar)	0 - 22	15 - 120	100 - 250
Spring colour	neutral	yellow	red

Once the train is installed, connect electrically all its elements: gas valves group, pressure switches, gas proving system.

⚠	**ATTENTION:** once the gas train is mounted according to the diagram on Fig. 6, the gas proving test mus be performed, according to the procedure set by the laws in force.

Hydraulic system

The pumps that are used can be installed both into single-pipe and double-pipe systems.

Single-pipe system: a single pipe drives the oil from the tank to the pump's inlet. Then, from the pump, the pressurised oil is driven to the nozzle: a part comes out from the nozzle while the othe part goes back to the pump. In this system, the by-pass plug, if provided, must be removed and the optional return port, on the pump's body, must be sealed by steel plug and washer.

Double-pipe system: as for the single pipe system, a pipe that connects the tank to the pump's inlet is used besides another pipe that connects the pump's return port to the tank, as well. The excess of oil goes back to the tank: this installation can be considered self-bleeding. If provided, the inside by-pass plug must be installed to avoid air and fuel passing through the pump.

Burners come out from the factory provided for double-pipe systems. They can be suited for single-pipe system (recommended in the case of gravity feed) as decribed before.To change from a 1-pipe system to a 2-pipe-system, insert the by-pass plug **G** (as for ccw-rotation- referring to the pump shaft).

Caution: Changing the direction of rotation, all connections on top and side are reversed.

Suntec T

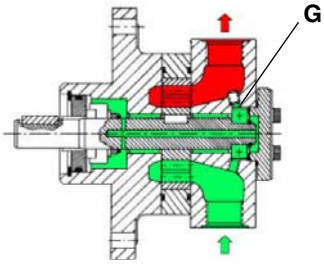

Bleed

Bleeding in two-pipe operation is automatic : it is assured by a bleed flat on the piston. In one-pipe operation, the plug of a pressure gauge port must be loosened until the air is evacuated from the system.

About the use of fuel pumps

- Make sure that the by-pass plug is not used in a single pipe installation, because the fuel unit will not function properly and damage to the pump and burner motor could result.
- Do not use fuel with additives to avoid the possible formation over time of compounds which may deposit between the gear teeth, thus obstructing them.
- After filling the tank, wait before starting the burner. This will give any suspended impurities time to deposit on the bottom of the tank, thus avoiding the possibility that they might be sucked into the pump.
- On initial commissioning a "dry" operation is foreseen for a considerable length of time (for example, when there is a long suction line to bleed). To avoid damages inject some lubrication oil into the vacuum inlet.
- Care must be taken when installing the pump not to force the pump shaft along its axis or laterally to avoid excessive wear on the joint, noise and overloading the gears.
- Pipes should not contain air pockets. Rapid attachment joint should therefore be avoided and threaded or mechanical seal junctions preferred. Junction threads, elbow joints and couplings should be sealed with removable sg component. The number of junctions should be kept to a minimum as they are a possible source of leakage.
- Do not use PTFE tape on the suction and return line pipes to avoid the possibility that particles enter circulation. These could deposit on the pump filter or the nozzle, reducing efficiency. Always use O-Rings or mechanical seal (copper or aluminium gaskets) junctions if possible.
- An external filter should always be installed in the suction line upstream of the fuel unit.

Suntec T pump

Viscosity	4 - 800 cSt
Oil temperature	0 - 140 °C
Minimum suction pressure	- 0,45bar to prevent gasing
Maximum suction pressure	5 bar
Rated speed	3600 rpm max.

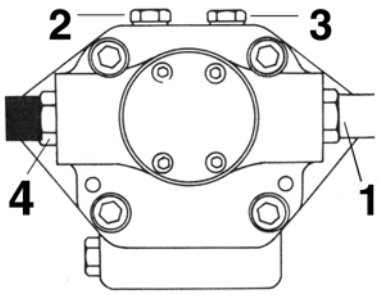

Key

1 To pressure adjusting valve G3/4

2 Pressure/vacuum gauge port to measure the inlet pressure/vacuum G1/4

3 Pressure gauge port G1/4

4 Inlet G3/4

Suntec TV Pressure governor

Pressure adjustment

Remove cap-nut 1 and the gasket 2, unscrew the lock nut 4. To increase pressure, twist adjusting screw 3 clockwise.

To decrease the pressure, twist screw counterclockwise. Tight the lock nut 4, refit the gasket 2 and the cap nut 1.

Key

1 Cap nut
2 Gasket
3 Adjusting screw
4 Lock nut
5 Gasket

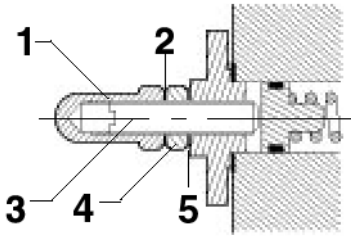

Fig. 11

Assembling the light oil flexible hoses

To connect the flexible light oil hoses to the pump, proceed as follows, according to the pump provided:

1 remove the closing nuts **A** and **R** on the inlet and return connections of the pump;

2 screw the rotating nut of the two flexible hoses on the pump **being careful to avoid exchanging the inlet and return lines**: see the arrows marked on the pump that show the inlet and the return (see prevoius paragraph).

Connections to the oil gun

1 Inlet (C)
2 Return (B)
3 Lance opening (A)
4 Heating wire (only for high density oil burners)
5 Cartdrige-type heater (only for Ecoden or heavy oil burners)

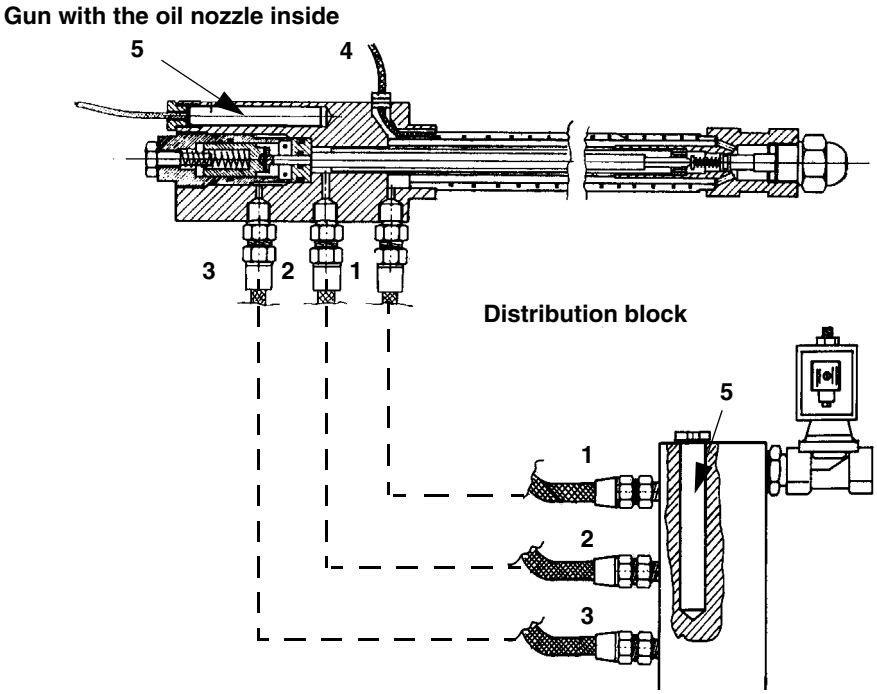

Connecting the burner to the oil pumping unit

Follow the scheme in the picture below to connect the burner to the oil pumping unit. The pump sends the oil coming from the tank to the burner. The pressure governor makes the oil reach the nozzle at the required pressure, while the excess of oil goes back to the tank. To change the delivery pressure act on the adjusting screw of the delivery pressure governor.

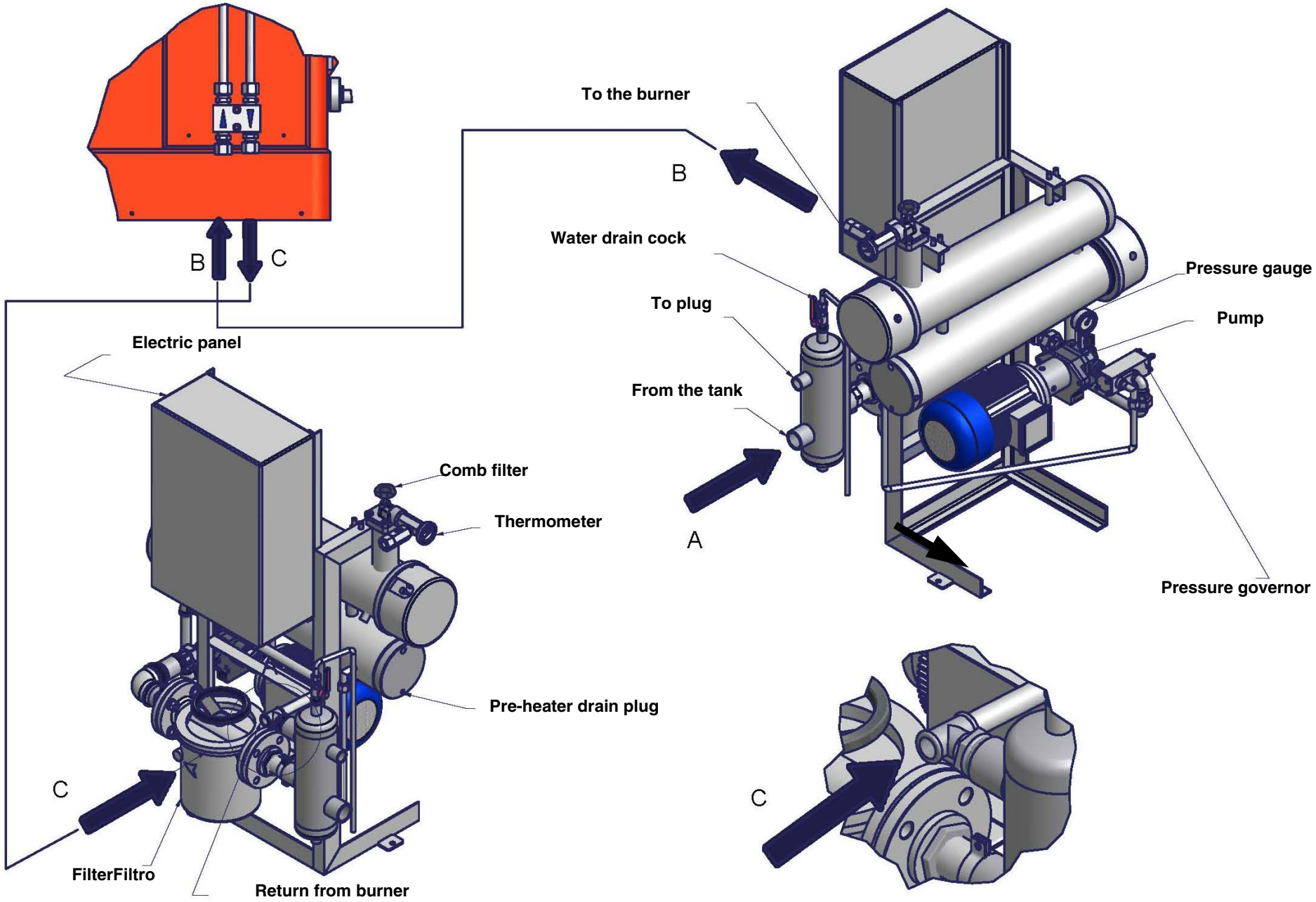

Guidelines for the appropriate use of heavy oil

For a correct operation of heavy oil or dual fuel burners (gas - heavy oil), the supply plant must be correctly build and it must ensure two fundamental conditions:

- CONSTANT PRESSURE
- CONSTANT TEMPERATURE

Here below we explain why it is essential to heat the oil and keep it under pressure.

Consider, as an example, a fuel oil with the following properties:

- Fuel oil BTZ (low sulphur rate)
- Viscosity from 3 to 5 °E at 50 °C

Such a fuel (see curve n. 3 in Fig. 12), at a temperature of 20° C, changes its viscosity from 3 - 5 °E to 15-20 °E and, at 10° C the viscosity exceeds 40° E.

In such conditions, obviously, the fuel couldn't be carried from the tank to the burner.

Once the oil has been heated, it can't be sucked by the burner pump, unless you keep it in pressure. In fact, as showed on drawing in Fig. 14, the pump manufacturer states that the minimum feeding pressure must be 1 bar at 40 °C temperature.

Should you try to suck the heated oil directly from the tank, you could get cavitation. The burner pump would constantly loose pressure as long as you heat the fuel. In this way you bring the nozzle pressure to values different from the one stated by the nozzle manufacturer. In such way the atomization would result incorrect.

From the diagram in Fig. 13, you will find the pre-heating temperature of the oil according to viscosity and, from diagram in Fig. 14, you get the pump feeding pressure according to temperature.

Therefore, it is necessary in order to set up a suitable oil circuit, look at the diagrams in Fig. 16 and Fig. 17, taken from UNI 9248 "FEEDING LINES FOR LIQUID FUELS TRANSPORT FROM TANK TO BURNER".

In any case, whatever is the choosen solution to realise the oil circuit, you must act according to what is mentioned here above (constant pressure and constant temperature).

After setting up the feeding circuit, you have to decide the temperature and pressure values to be set up in the components of the feeding pipeline and of the burner.

Please find here below, a set up table regarding several types of fuels.

FUEL	VISCOSITY AT 50 °C		PIPELINE PRESSURE	PIPELINE TEMPERATURE*	PUMP SUPPLY TEMPERATURE (DIAGRAM IN Fig. 12)
	°E		bar	°C	°C
Fluid BTZ (ecoflu)	3	7	1 - 2	20	30
High viscosity BTZ (Ecoden)	7	15	1 - 2	50	50
High viscosity	15	50	1 - 2	65	80

Tab. 1 - Supply pipeline

FUEL	VISCOSITY AT 50 °C		NOZZLE PRESSURE MEASURED IN THE GUN	RETURN NOZZLE PRESSURE		TEMPERATURE ON THE PRE-HEATING RESISTORS THERMOSTAT TR*		TEMPERATURE OF THE RESISTORS SAFETY THERMOSTAT TRS	TEMPERATURE ON THE OIL ENABLING THERMOSTAT TCN	TEMPERATURE ON THE PLANT ENABLING THERMOSTAT TCI
				min.	max.	min.	max.			
	°E		bar	bar		°C		°C	°C	°C
Fluid BTZ (ecoflu)	3	7	25	7	20	100	115	190	80	-
High viscosity BTZ (Ecoden)	7	15	25	7	20	125	140	190	100	60 - 80
High viscosity	15	50	25	7	20	145	160	190	110	70 - 90

Tab. 2 - Burner

* The temperature in the pre-heater must be set to get a viscosity in the nozzle from 1.4 to 1.6 °E.

VISCOSITY UNITS CONVERSION TABLE						
Cinematics Engler (Degrees) °E	**Cinematics (Centistokes) cSt**	**Cinematics (Centipoises) cps**	**Saybolt Universal (Seconds) S.S.U.**	**Saybolt Furol (Seconds) S.S.F.**	**Redwood n. 1 (Seconds) R.S.I**	**Redwood n. 2 (Seconds) R.S.II**
2.95	20.60	20.60	100		88.4	
3.21	23.00	23.00	110		97.1	
3.49	25.3	25.3	120		105.9	
3.77	27.5	27.5	130		114.8	
4.04	29.8	29.8	140		123.6	
4.32	32.1	32.1	150		132.4	
4.59	34.3	34.3	160		141.1	
4.88	36.5	36.5	170		150.0	
5.15	38.7	38.7	180		158.8	
5.44	41.0	41.0	190		167.5	
5.72	43.2	43.2	200	23	176.4	
6.28	47.5	47.5	220	25.3	194.0	
6.85	51.9	51.9	240	27.0	212	
7.38	56.2	56.2	260	28.7	229	
7.95	60.6	60.6	280	30.5	247	
8.51	64.9	64.9	300	32.5	265	
9.24	70.4	70.4	325	35.0	287	
9.95	75.8	75.8	350	37.2	309	
10.7	81.2	81.2	375	39.5	331	
11.4	86.6	86.6	400	42.0	353	
12.1	92.0	92.0	425	44.2	375	
12.8	97.4	97.4	450	47.0	397	
13.5	102.8	102.8	475	49	419	
14.2	108.2	108.2	500	51	441	
15.6	119.2	119.2	550	56	485	
17.0	120.9	120.9	600	61	529	
18.5	140.7	140.7	650	66	573	
19.9	151.3	151.3	700	71	617	
21.3	162.3	162.3	750	76	661	
22.7	173.2	173.2	800	81	705	
24.2	184.0	184.0	850	86	749	
25.6	194.8	194.8	900	91	793	
27.0	206	206	950	96	837	
28.4	216	216	1000	100	882	
34.1	260	260	1200	212	1058	104
39.8	303	303	1400	141	1234	122
45.5	346	346	1600	160	1411	138
51	390	390	1800	180	1587	153
57	433	433	2000	200	1703	170
71	541	541	2500	250	2204	215
85	650	650	3000	300	2646	255
99	758	758	3500	350	3087	300

Tab. 3

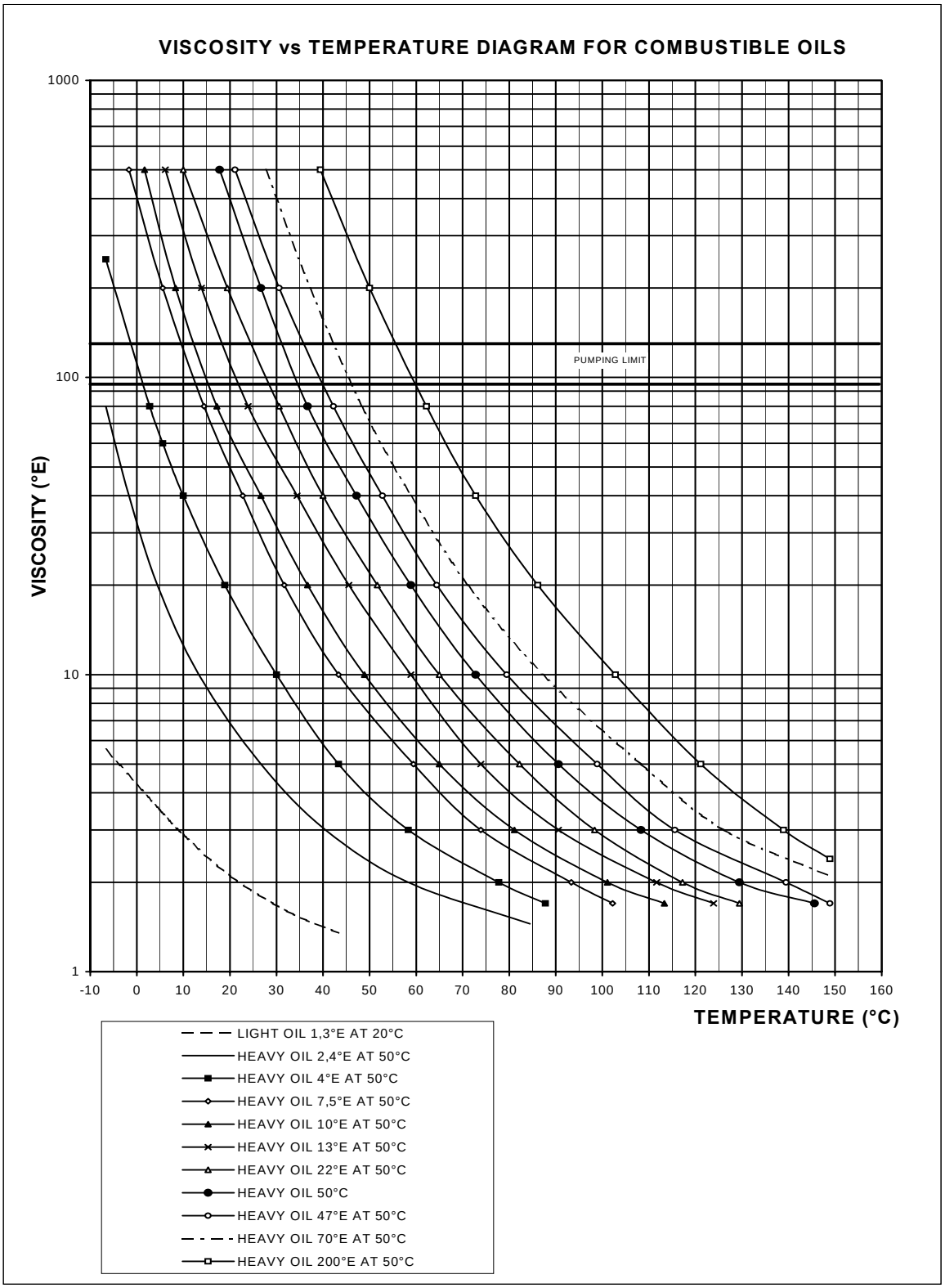

Fig. 12

Burners must be supplied with fuel at a minimum temperature at the pump inlet, as a function of the oil viscosity, as shown in Fig. 12, Fig. 13 and Fig. 15.

Minimum feeding temperature vs. oil viscosity

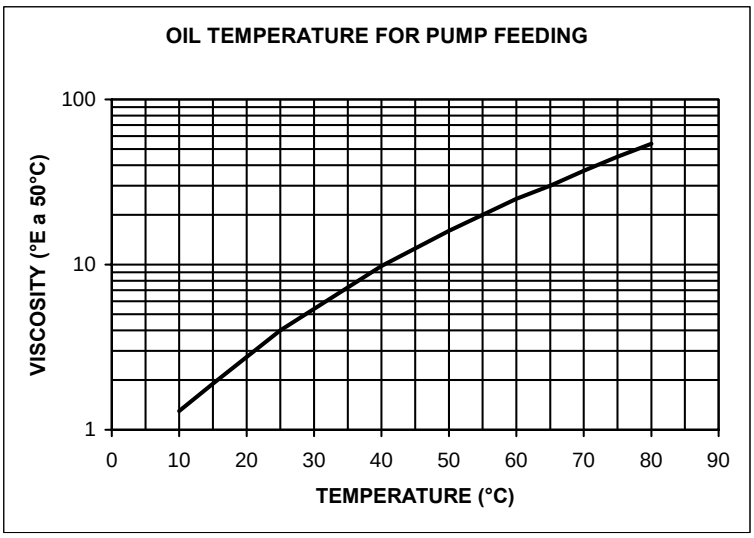

Fig. 13

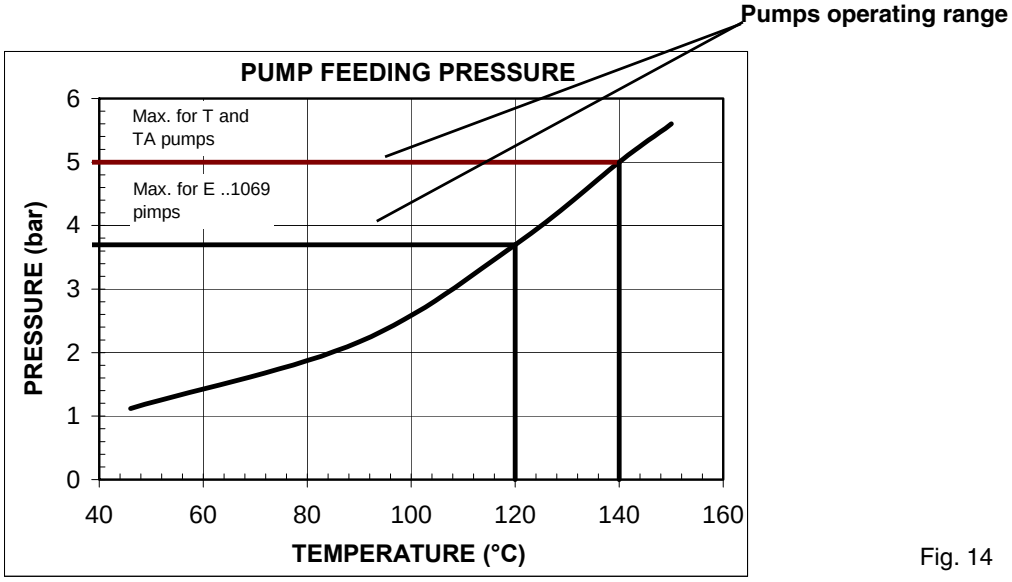

Fig. 14

The use of heavy oil forces to feed the burner to a pressure strictly related to the oil temperature. This avoids damage to the pump caused by gassification.

VISCOSITY vs. TEMPERATURE DIAGRAM

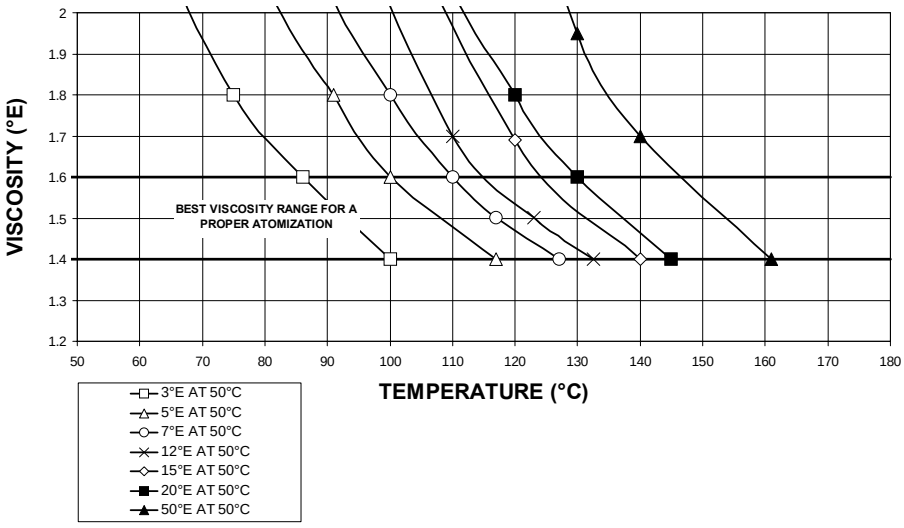

Fig. 15

HYDRAULIC DIAGRAMS

Fig. 16 - **Hydraulic diagram 3ID0023 - Single burner configuration**

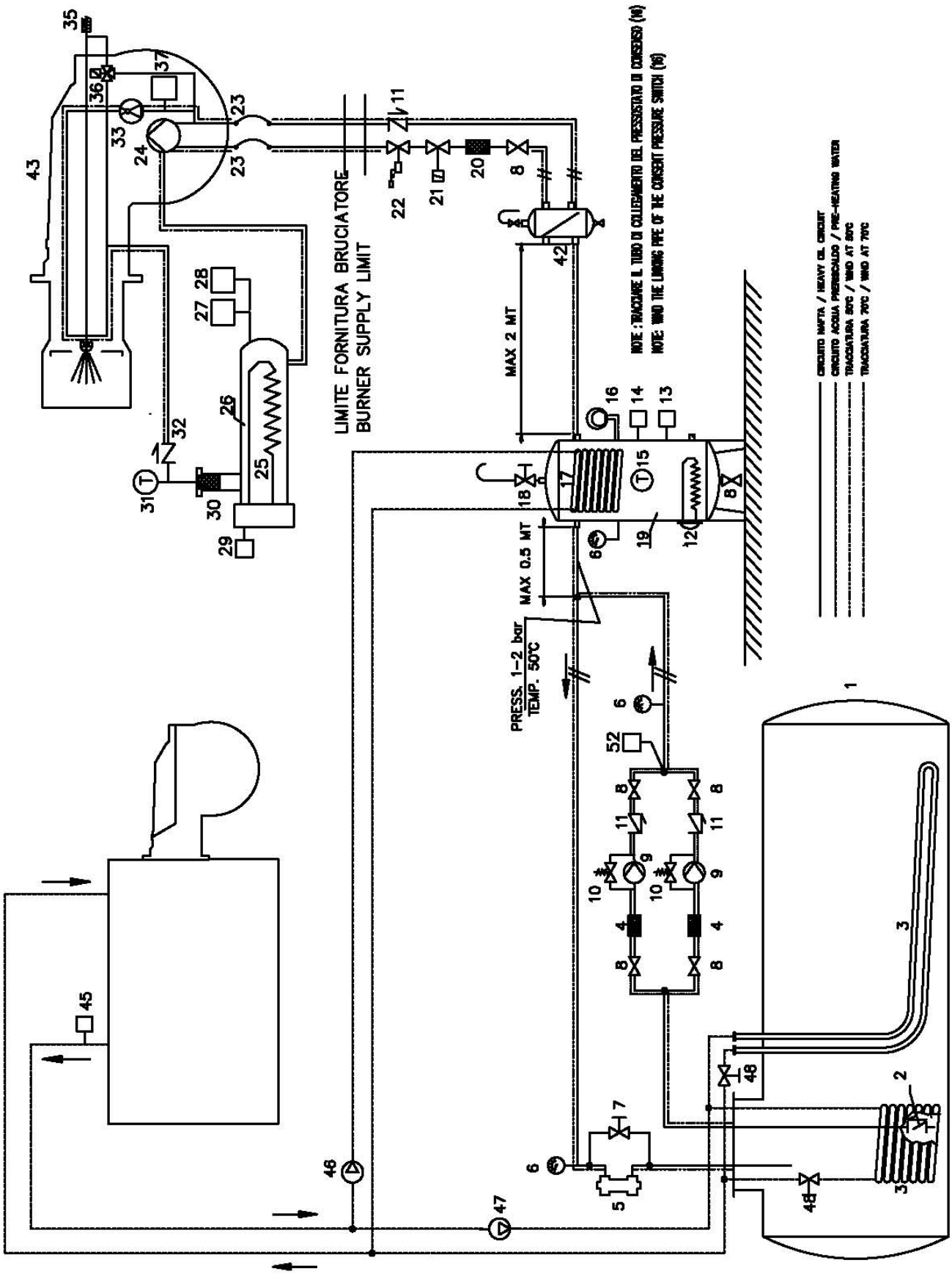

Fig. 17 - **Hydraulic diagram 3ID0014 - Two or more burners configuration**

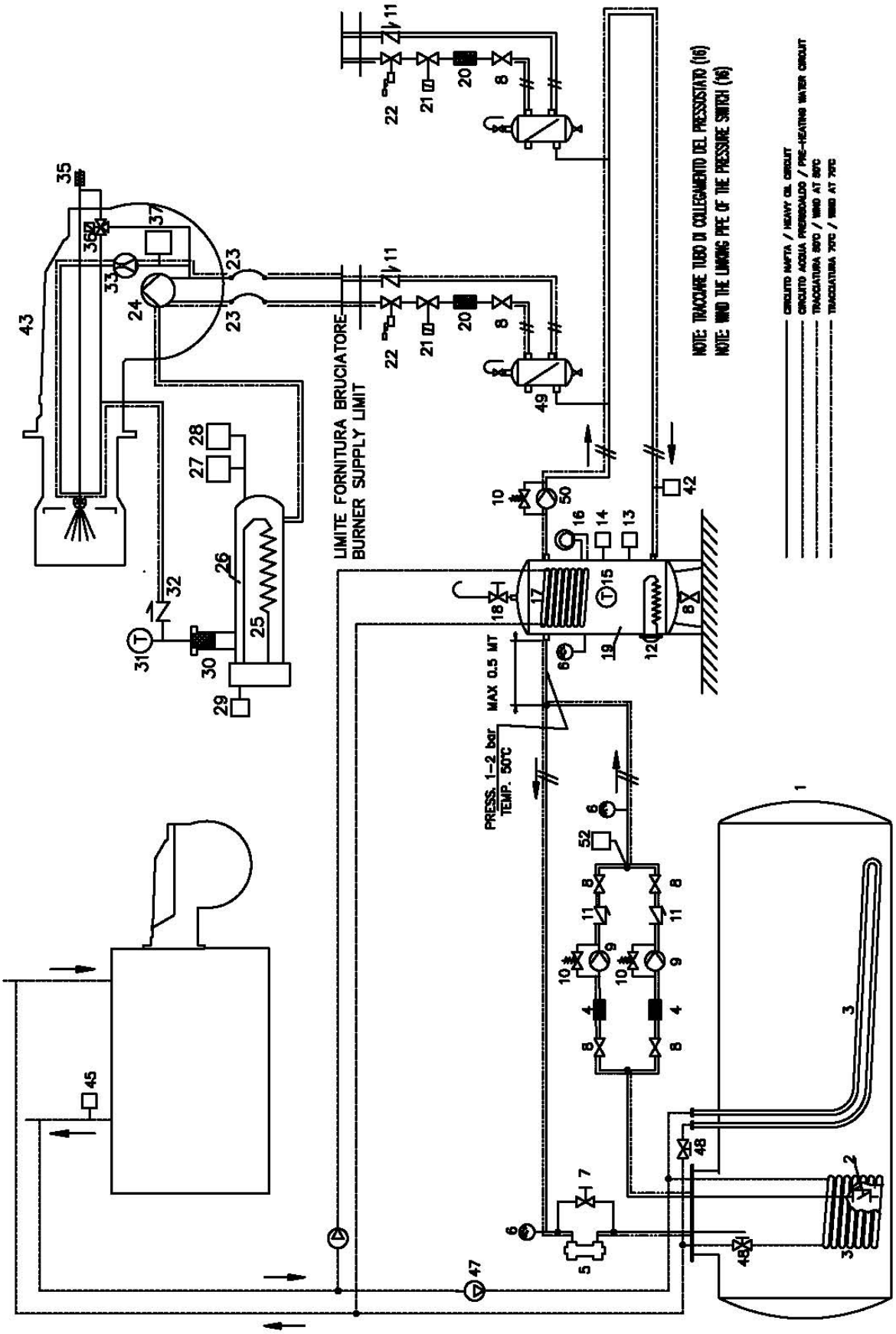

-

Hydraulic Diagram 3ID0014

1 Main tank
2 Bottom valve
3 Main tank pre-heating pipe
4 Oil filter (filtration, 1mm)
5 Circuit pressure regulator
6 Manometer
7 Pressure regulation by-pass valve
8 Manual valve
9 Oil pump
10 Pump pressure regulator
11 Unidirectional valve
12 Service tank pre-heating resistor
13 Service tank pre-heating thermostat
14 Burner consent thermostat
15 Thermometer
16 Consent pressure switch for service tank resistor
17 Service tank heating pipe
18 Service tank air drain valve
19 Service tank
20 Oil filter
21 Fuel solenoid valve
22 Fuel valve
23 Burner pump flexible hoses
24 Burner oil pump
25 Pre-heating tank resistor
26 Pre heating tank
27 Oil consent thermostat
28 Heather safety thermostat
29 Thermostat for oil temperature setting
30 Tank filter
31 Thermometer
32 Check valve
35 Oil needle drive piston
36 Oil rate regulator
37 Burner consent thermostat
42 Burner start consent thermostat
43 Burner
45 Thermostat for pipes pre-heating pumps
46 Water pump for service tank pre-heating (1)
47 Water pump for main tank pre-heating (19)
48 Water pre-heating balance setting valve
50 Oil circulation pump
52 Oil ring max. pressure switch

Hydraulic Diagram 3ID0023

1 Main tank
2 Bottom valve
3 Main tank pre-heating pipe
4 Oil filter
5 Circuit pressure regulator
6 Manometer
7 Pressure regulation by-pass valve
8 Manual valve
9 Oil pump
10 Pump pressure regulator
11 Unidirectional valve
12 Service tank pre-heating resistor
13 Service tank pre-heating thermostat
14 Burner consent thermostat
15 Thermometer
16 Consent pressure switch for service tank resistor
17 Service tank heating pipe
18 Service tank air drain valve
19 Service tank
20 Oil filter
21 Fuel solenoid valve
22 Fuel valve
23 Burner pump flexible hoses
24 Burner oil pump
25 Pre-heating tank resistor
26 Pre heating tank
27 Oil consent thermostat
28 Pre-heating tank resistors safety thermostat
29 Thermostat for oil temperature setting
30 Pre-heating tank filter
31 Thermometer
32 Check valve
33 Return pressure regulator
35 Oil needle drive piston
36 Three way valve for piston drive
37 Burner consent thermostat
42 Air separation bottle
43 Burner
45 Thermostat for pipes pre-heating pumps
46 Water pump for service tank pre-heating (1)
47 Water pump for main tank pre-heating (19)
48 Valves for setting of pre-heating water balance
52 Oil ring max. pressure switch

Electrical connections

	Respect the basic safety rules. make sure of the connection to the earthing system. do not reverse the phase and neutral connections. fit a differential thermal magnet switch adequate for connection to the mains.
	ATTENTION: before executing the electrical connections, pay attention to turn the plant's switch to OFF and be sure that the burner's main switch is in 0 position (OFF) too. Read carefully the chapter "WARNINGS", and the "Electrical connections" section.

To execute the electrical connections, proceed as follows:

1 remove the cover from the electrical board, unscrewing the fixing screws;
2 to execute the electrical connections see chapter "Electric wiring diagrams";
3 check the direction of the fan motor (see next paragraph)
4 refit the panel cover.

	WARNING: The burner is provided with an electrical bridge between terminals 6 and 7; when connecting the high/ low flame thermostat, remove this bridge before connecting the thermostat.
	IMPORTANT: Connecting electrical supply wires to the burner teminal block MA, be sure that the ground wire is longer than phase and neutral ones.

To execute the electrical connections see the "ELECTRICAL WIRING DIAGRAMS".

Rotation of fan motor and pump motor

Once the electrical connection of the burner is executed, remember to check the rotation of the motors. The motor should rotate according to the indication on the body. In the event of wrong rotation, reverse the three-phase supply and check again the rotation of the motor.

Connecting the oil heating resistors

18 - 24 kW

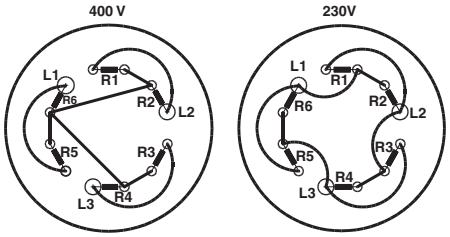

PUMP MOTOR CONNECTION

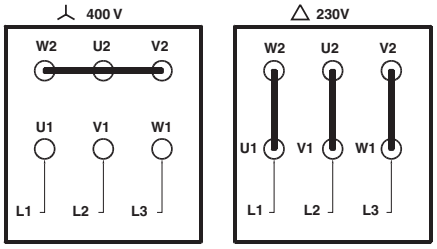

Connecting the fan motor

In case of star-delta start-up, connect all the 6 wires, according to the sequence shown in the "Electrical wiring diagrams" chapter. If the start-up is performes by means of inverter, follow the instructions on the related manual.

Oil thermostat adjustment

To find the thermostats, remove the cover of the burner switchboard. Adjust them using a screwdriver on the VR screw as shown in the next picture.

NOTE: thermostat **TCI** is provided on burners fired with fuel oil having a 50° E at 50° C viscosity only.

TCN - Oil enabling thermostat (Fig. 18)

Adjust this thermostat to a value 10% lower than that showed in the viscosity-temperature diagram (Fig. 12).

TRS - Resistor safety thermostat (Fig. 18)

The thermostat is set during factory testing at about 190° C.

This thermostat trips when the operating temperature exceeds the set limit. Ascertain the cause of the malfunction and reset the thermostat by means of the PR button.

TR - Resistor thermostat (Fig. 18)

Adjust this thermostat to the correct value according to the viscosity-temperature diagram (Fig. 12) and check the temperature by using a thermometer with a scale of up to 200° C mounted on the pre-heating tank.

TCI - Installation enabling thermostat (Fig. 18)

This thermostat is fitted on burners fired with oil at a viscosity of 50° E at 50° C only. Set the thermostat according to the data showed on page 20.

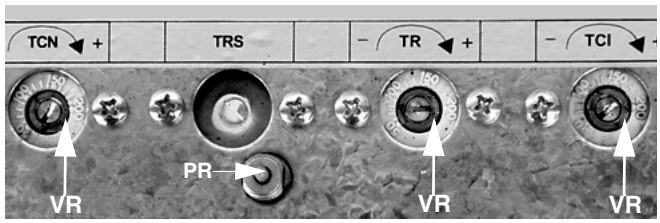

Fig. 18

ADJUSTMENT

⚠	***ATTENTION:*** **before starting the burner up, be sure that the manual cutoff valves are open and check that the pressure upstream the gas train complies the value quoted on paragraph "Technical specifications". Be sure that the mains switch is closed.**
	ATTENTION: During commissioning operations, do not let the burner operate with insufficient air flow (danger of formation of carbon monoxide); if this should happen, make the gas decrease slowly until the normal combustion values are achieved.
	WARNING: EVER LOOSE THE SEALED SCREWS, OTHERWISE THE DEVICE WARRANTY WILL BE IMMEDIATELY INVALIDATE!

⚠	**IMPORTANT! the combustion air excess must be adjusted according to the in the following chart:**

Recommended combustion parameters		
Fuel	***Recommended (%) CO_2***	***Recommended (%) O_2***
Natural gas	9 ÷ 10	3 ÷ 4.8
Heavy oil <=7°E a 50 °C	11 ÷ 12	4.2 ÷ 6.2
Heavy oil >=7°E a 50 °C	11 ÷ 12.5	4.7 ÷ 6.7

Combustion head gas pressure curves depending on the flow rate

Curves are referred to pressure = 0mbar in the combustion head!

The curves referred to the gas pressure in the combustion head, depending on the gas flow rate, are referred to the burner properly adjusted (percentage of residual O_2 in the flues as shown in the "Recommended combustion values" table and CO in the standard limits). During this stage, the combustion head, the gas butterfly valve and the servocontrol are at the maximum opening. Refer to Fig. 19, showing the correct way to measure the gas pressure, considering the values of pressure in combustion chamber, surveyed by means of the pressure gauge or taken from the boiler's Technical specifications.

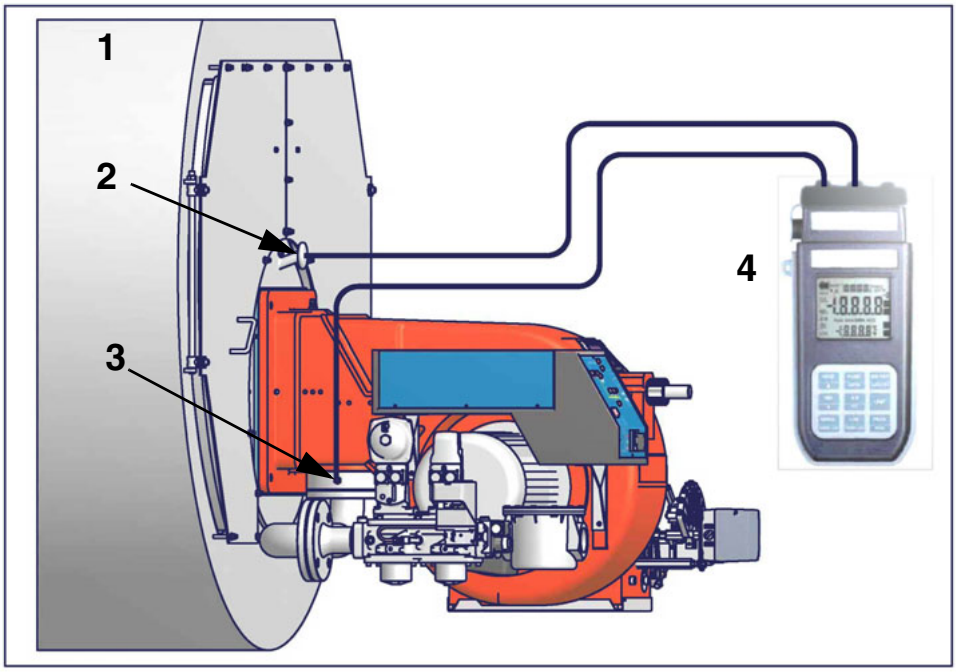

Fig. 19

Key

1 Generator
2 Pressure outlet on the combustion chamber
3 Gas pressure outlet on the butterfly valve
4 Differential pressure gauge

Measuring the gas pressure in the combustion head

In order to measure the pressure in the combustion head, insert the pressure gauge probes: one into the combustion chamber's pressure outlet (Fig. 19-2) to get the pressure in the combustion chamber and the other one into the butterfly valve's pressure outlet of the burner (Fig. 19-3). On the basis of the measured differential pressure, it is possible to get the maximum flow rate: in the pressure - rate curves (showed on the next paragraph), it is easy to find out the burner's output in Stm^3/h (quoted on the x axis) from the pressure measured in the combustion head (quoted on the y axis). The data obtained must be considered when adjusting the gas flow rate.

NOTE: THE PRESSURE-RATE CURVES ARE GIVEN AS INFORMATION ONLY; FOR A PROPER SETTING OF THE GAS RATE, PLEASE REFER TO THE GAS METER READING.

Pressure - rate in combustion head curves

KTP1030

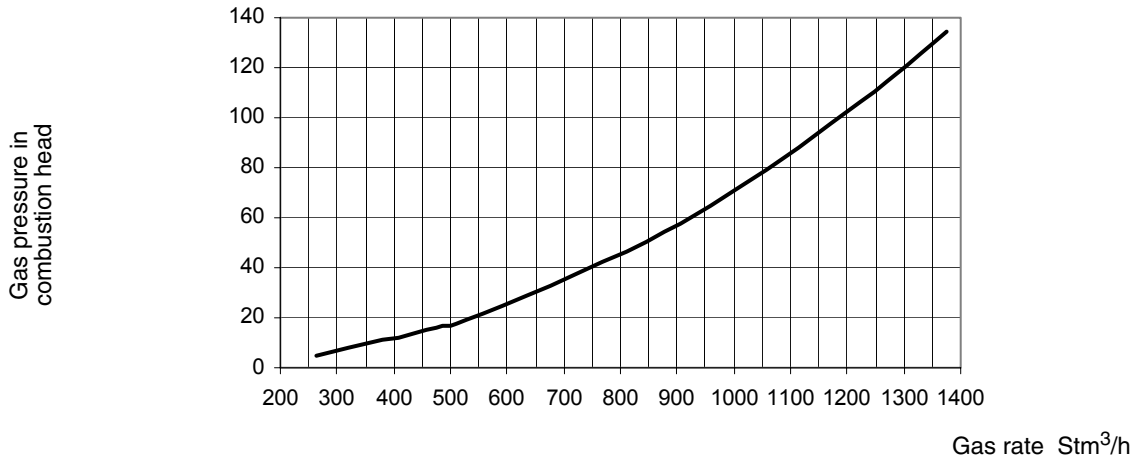

KTP1050

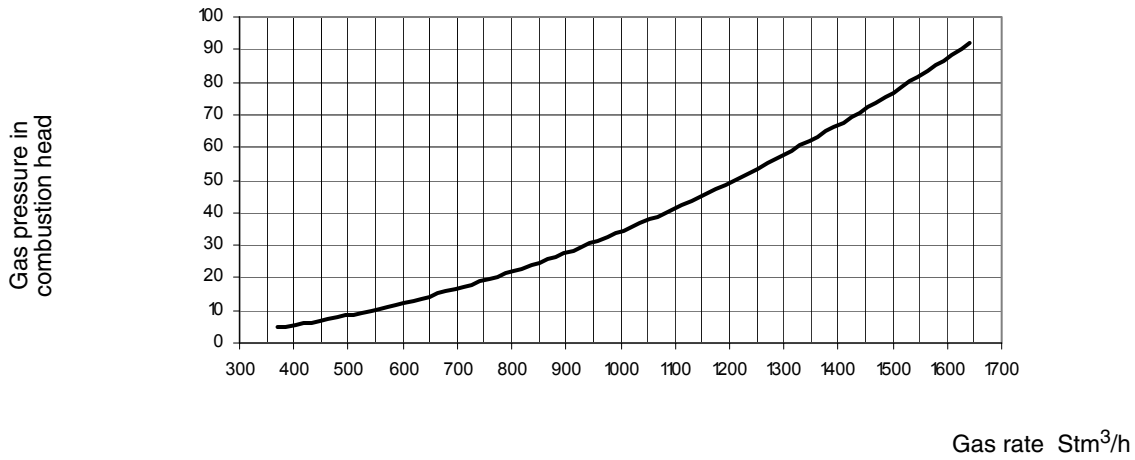

KTP1080

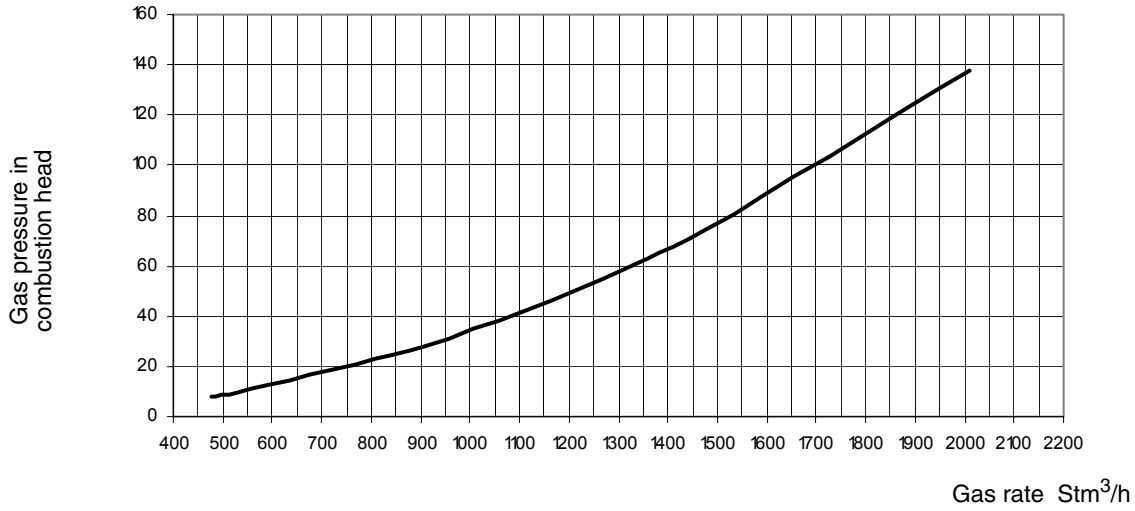

ADJUSTING AIR AND GAS FLOW RATES

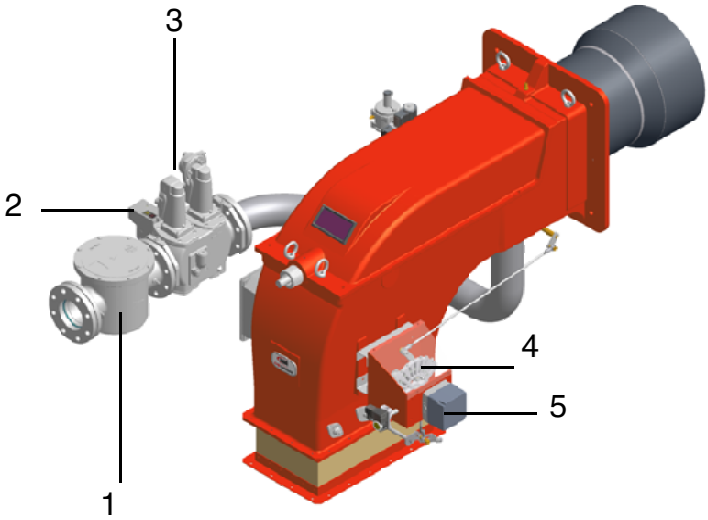

Fig. 20

Keys

1 Gas filter
2 Gas proving system
3 Gas valves
4 Adjusting cam
5 Actuator

Gas Filter

The gas filters remove the dust particles that are present in the gas, and prevent the elements at risk (e.g.: burner valves, counters and regulators) from becoming rapidly blocked. The filter is normally installed upstream from all the control and on-off devices.

VPS504 Gas proving system

The VPS504 check the operation of the seal of the gas shut off valves. This check is carried out as soon as the boiler thermostat gives a start signal to the burner, creating, by means of the diaphragm pump inside it, a pressure in the test space of 20 mbar higher than the supply pressure.

When wishing to monitor the test, install a pressure gauge ranged to that of the pressure supply point PA.

If the test cycle is satisfactory, after a few seconds the consent light LC (yellow) comes on. In the opposite case the lockout light LB (red) comes on.

To restart it is necessary to reset the appliance by pressing the illuminated pushbutton LB.

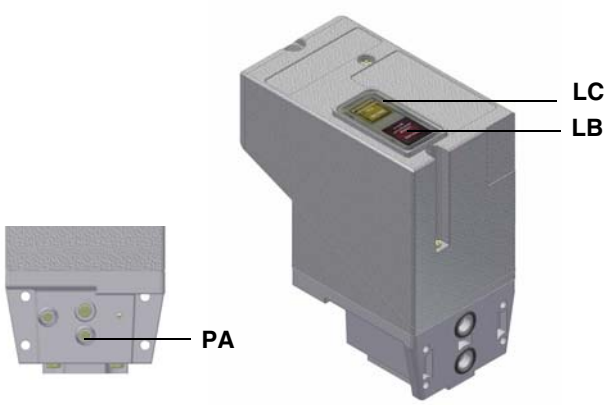

Fig. 21

*Adjusting the injector gas flow rate: Brahma EG12*R valve and pressure governor*

To change the injector gas valve flow rate, proceed as follows:

1 remove the protection on the bottom of the valve, moving it counterclockwise (see next picture);

2 rotate clockwise the nut 1 as shown, to close the valve; counterclockwise to open the valve.

To perform a finest adjustment, act directly on the pressure governor as follows (see next picture):

3 remove the cap **T**: to increase theoutlet gas pressure, use a screwdriver on the screw **TR** as shown in the picture below. Screw to increase the pressure, unscrew to decrease; once the regulation is performed, replace cap **T**.

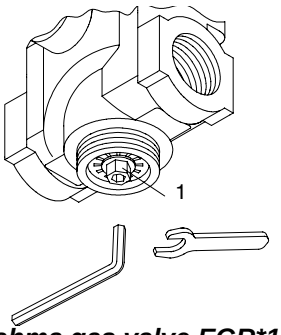

Brahma gas valve EGR*12

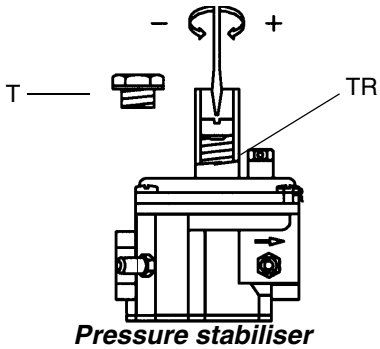

Pressure stabiliser

Adjustments - brief description

Adjust the air and gas flow rates at the maximum output (“high flame”) first, by means of the air damper and the adjusting cam respectively.

- Check that the combustion parameters are in the suggested limits.
- Check the flow rate measuring it on the counter or, if it was not possible, verifying the combustion head pressure by means of a differential pressure gauge, as described on par. “Measuring the gas pressure in the combustion head” on page 28.
- Then, adjust the combustion values corresponding to the points between maximum and minimum: set the shape of the adjusting cam foil. The adjusting cam sets the air/gas ratio in those points, regulating the opening-closing of the throttle gas valve.
- Set, now, the low flame output, acting on the low flame microswitch of the actuator in order to avoid the low flame output increasing too much or that the flues temperature gets too low to cause condensation in the chimney.

Now, adjust the burner according to the actuator model provided.

Adjustment procedure

To change the burner setting during the testing in the plant, follow the next procedure.

On the DUNGS MBC..SE gas valves group, set the pressure regulator to 1/3 of its stroke, using a 2.5 allen key.

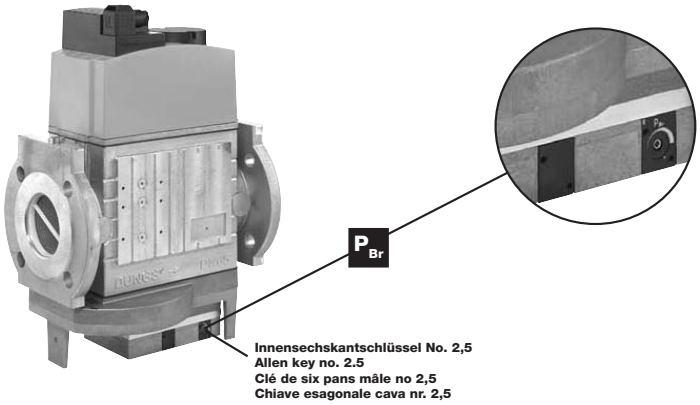

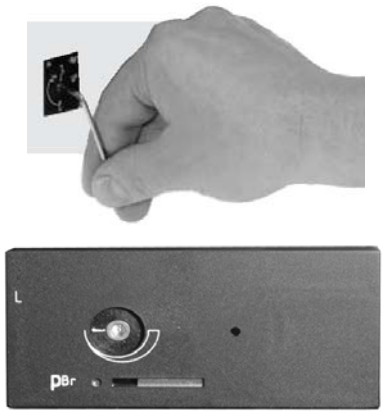

Pressure setting

1 Before starting the burner up, drive the high flame actuator microswitch matching the low flame one (in order to let the burner operates at the lowest output) to safely achieve the high flame stage.

2 cam IV (stroke limitation cam) must be set a little higher than the cam III to limit the output in the first seconds the flame appears;
NOTE: cam IV must shift according to cam III.

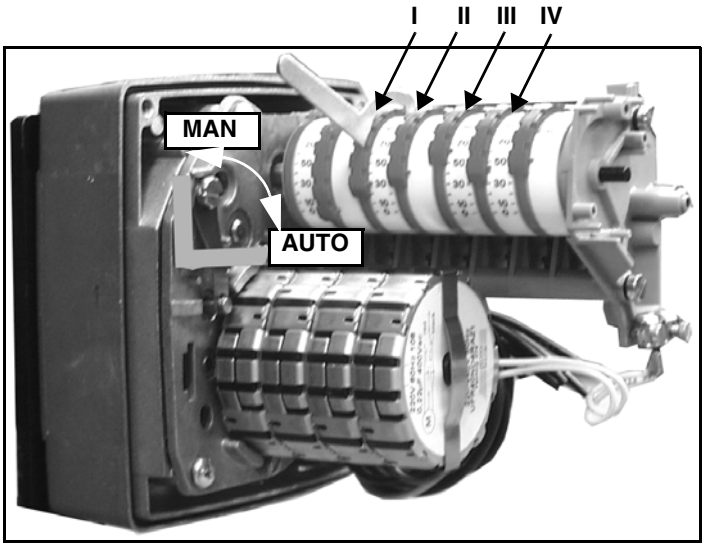

Servocontrol cams

I	High flame
II	Stand-by and Ignition
III	Low flame (gas)
IV	Low flame (oil)
V	Stroke limitation

1 turn the burner on by selecting GAS fuel by means of the burner **CM** switch (it is placed on the burner control panel - see Đèñ. 58)

2 check the fan motor rotation.

3 Before starting the burner up, drive the high flame actuator microswitch matching the low flame one (in order to let the burner operates at the lowest output) to safely achieve the high flame stage.

4 Start the burner up by means of the thermostat series and wait until the pre-purge time comes to an end and that the burner starts up;

5 drive the burner to high flame stage, by means fo the thermostat **TAB**.

6 Then move progressively the microswitch to higher values until it reaches the high flame position; always check the combustion values and eventually adjusting the gas by means of the valves group stabiliser.

7 go on adjusting air and gas flow rates: check, continuosly, the flue gas analisys, as to avoid combustion with little air; dose the air

according to the gas flow rate change following the steps quoted below;

8 acting on the pressure stabiliser of the valves group, adjust the **gas flow rate in the high flame stage** as to meet the values requested by the boiler/utilisation:

- Siemens VGD valves group: remove cap **T** and act on the **VR** adjusting screw to increase or decrease the pressure and consequently the gas rate; screwind **VR** the rate increases, unscrewing it decreases (see next figure).

- Dungs MBC..SE valves group: act on its pressure governor to increase or decrease the pressure and consequently the gas rate.

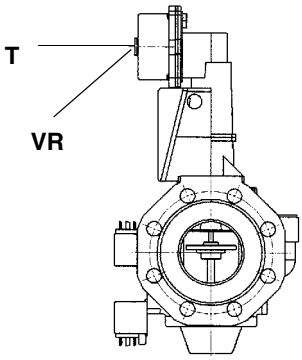

:

Siemens VGD..

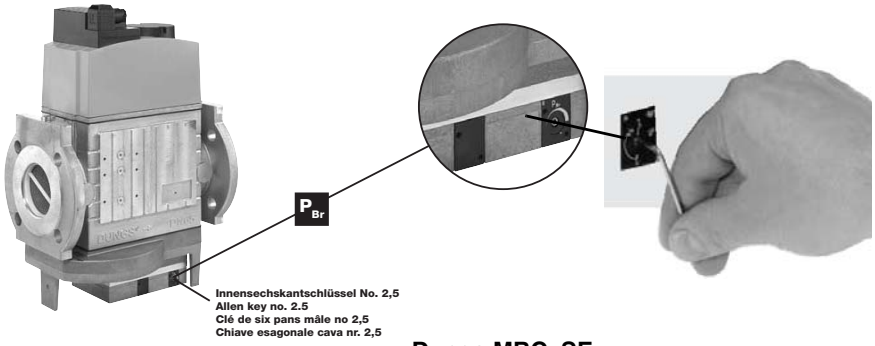

Dungs MBC..SE

9 To adjust the **air flow rate in the high flame stage**, loose the **RA** nut and screw **VRA** as to get the desired air flow rate: moving the rod **TR** towards the air damper shaft, the air damper opens and consequently the air flow rate increases, moving it far from the shaft the air damper closes and the air flow rate decreases.

Note: once the procedure is perfomed, be sure that the blocking nut **RA** is fasten. Do not change the position of the air damper rods.

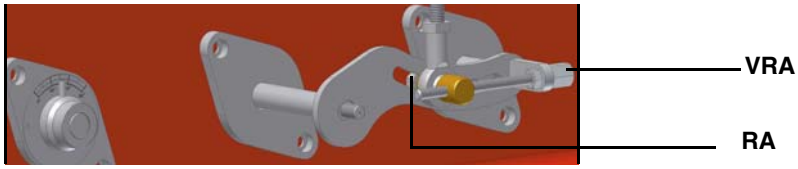

Note: once the procedure is perfomed, be sure that the blocking nut **RA** is fasten. Do not change the position of the air damper rods.

10 Only if necessary, change the combusiton head position: to let the burner operate at a lower output, loose the **VB** screw and move progressively back the combustion head towards the MIN position, by turning clockwise the **VRT** ring nut. Fasten **VB** screw when the adjustment is accomplished.

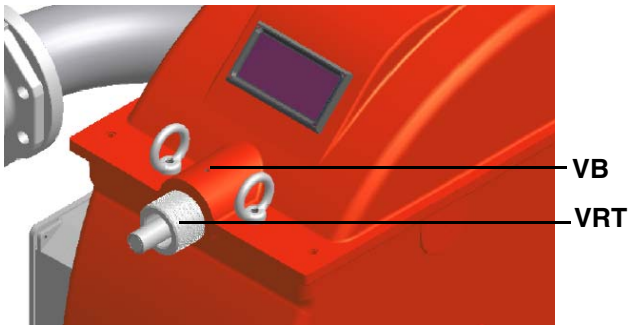

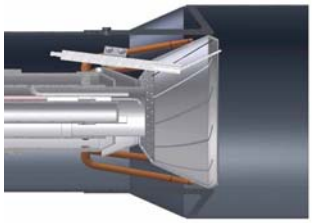

"MAX"head position

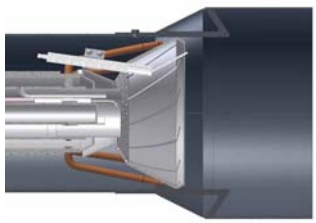

head position

Attention! if it is necessary to change the head position, repeat the air and gas adjustments described above.

11 the air and gas rate are now adjusted at the maximum power stage, go on with the point to point adjustement on the **SV1** (gas side) adjusting cam as to reach the minimum output point.

12 as for the point-to-point regulation, move the gas low flame microswitch (cam III) a little lower than the maximum position (90°);

13 set the **TAB** thermostat to the minimum in order that the actuator moves progressively towards the low flame position;

14 move cam III to the minimum to move the actuator towards the low flame until the two bearings find the adjusting screw that refers to the lower position: screw **V1** to increase the rate, unscrew to decrease.

15 Move again cam III towards the minimum to meet the next screw on the adjusting cam and repeat the previous step; go on this way as to reach the desired low flame point.

16 Now adjust the pressure switches (see next paragraph).

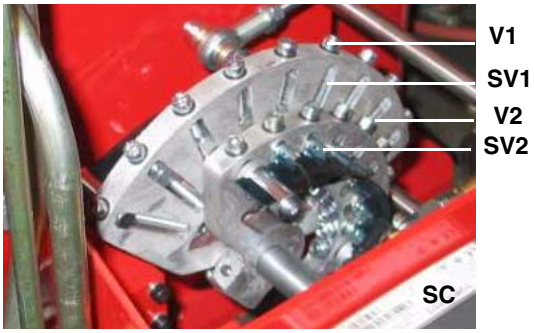

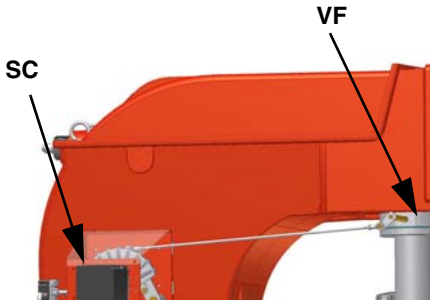

butterfly valve close

butterfly valve open

Calibration of air pressure switch

To calibrate the air pressure switch, proceed as follows:

- Remove the transparent plastic cap.
- Once air and fuel setting have been accomplished, startup the burner.
- During the pre-purge phase o the operation, turn slowly the adjusting ring nut **VR** in the clockwise direction (to increase the adjusting pressure) until the burner lockout, then read the value on the pressure switch scale and set it to a value reduced by 15%.
- Repeat the ignition cycle of the burner and check it runs properly.
- Refit the transparent plastic cover on the pressure switch.

Calibration of minimum gas pressure switch

As for the gas pressure switch calibration, proceed as follows:

- Be sure that the filter is clean.
- Remove the transparent plastic cap.
- While the burner is operating at the maximum output, test the gas pressure on the pressure port of the minimum gas pressure switch.
- Slowly close the manual cutoff valve (placed upstream the pressure switch, see gas train installation diagram), until the detected pressure is reduced by 50%. Pay attention that the CO value in the flue gas does not increase: if the CO values are higher than the limits laid down by law, slowly open the cutoff valve as to get values lower than these limits.
- Check that the burner is operating correctly.
- Clockwise turn the pressure switch adjusting ring nut (as to increase the pressure value) until the burner stops.
- Slowly fully open the manual cutoff valve.
- Refit the transparent plastic cover on the pressure switch.

Adjusting the high gas pressure switch (when provided)

To calibrate the high pressure switch, proceed as follows:

- remove the plastic cover;
- measure the gas pressure in the network, when flame is off;
- by means of the adjusting ring nut **VR**, set the value read on step 2, increased by the 30%;
- replace the plastic cover.

PGCP Gas leakage pressure switch (witn SiemensLDU/Siemens LMV burner control)

- remove the pressure switch plastic cover;
- adjust the PGCP pressure switch to the same value set for the minimum gas pressure switch;
- replace the plastic cover.;

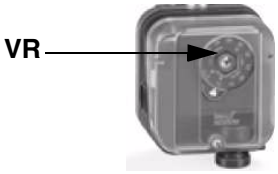

Fully modulating burners

To adjust the fully-modulating burners, use the **CMF** switch on the burner control panel (see next picture), instead of the **TAB** thermostat as described on the previous paragraphs about the progressive burners. Go on adjusting the burner as described before, paying attention to use the CMF switch intead of **TAB**.

The **CMF** position sets the oprating stages: to drive the burner to the high-flame stage, set CMF=1; to drive it to the low-flame stage, set CMF=2.

To move the adjusting cam set CMF=1 or 2 and then CMF=0.

CMF = 0 stop at the current position
CMF = 1 high flame operation
CMF = 2 low flame operation
CMF = 3 automatic operation

Adjusting heavy oil flow rate

The light oil flow rate can be adjusted choosing a by-pass nozzle that suits the boiler/utilisation output and setting the delivery and return pressure values according to the ones quoted on the chart below and the diagram on Fig. 22 (as far as reading the pressure values, see next paragraphs).

NOZZLE	DELIVERY PRESSURE bar	RETURN PRESSURE MAX. bar	RETURN PRESSURE MIN. bar
FLUIDICS WR2	25	20	7 (recommended)
BERGONZO B/C	25	20	7 (recommended)

Tab. 4

	FLOW RATE kg/h	
DIMENSIONS	**Min**	**Max**
40	13	40
50	16	50
60	20	60
70	23	70
80	26	80
90	30	90
100	33	100
115	38	115
130	43	130
145	48	145
160	53	160
180	59	180
200	66	200
225	74	225
250	82	250
275	91	275
300	99	300
330	109	330
360	119	360
400	132	400
450	148	450
500	165	500
550	181	550
600	198	600
650	214	650
700	231	700
750	250	750
800	267	800

Fig. 22

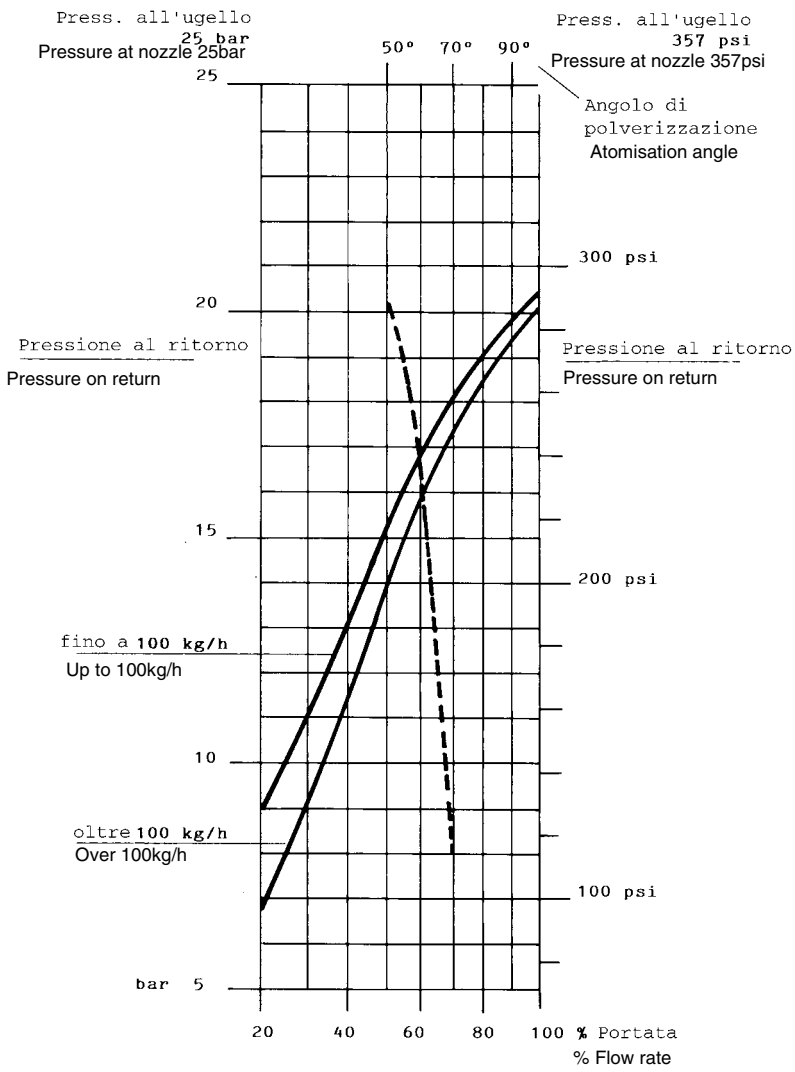

----------Atomisation angle according to the return pressure
_____ % Flow rate

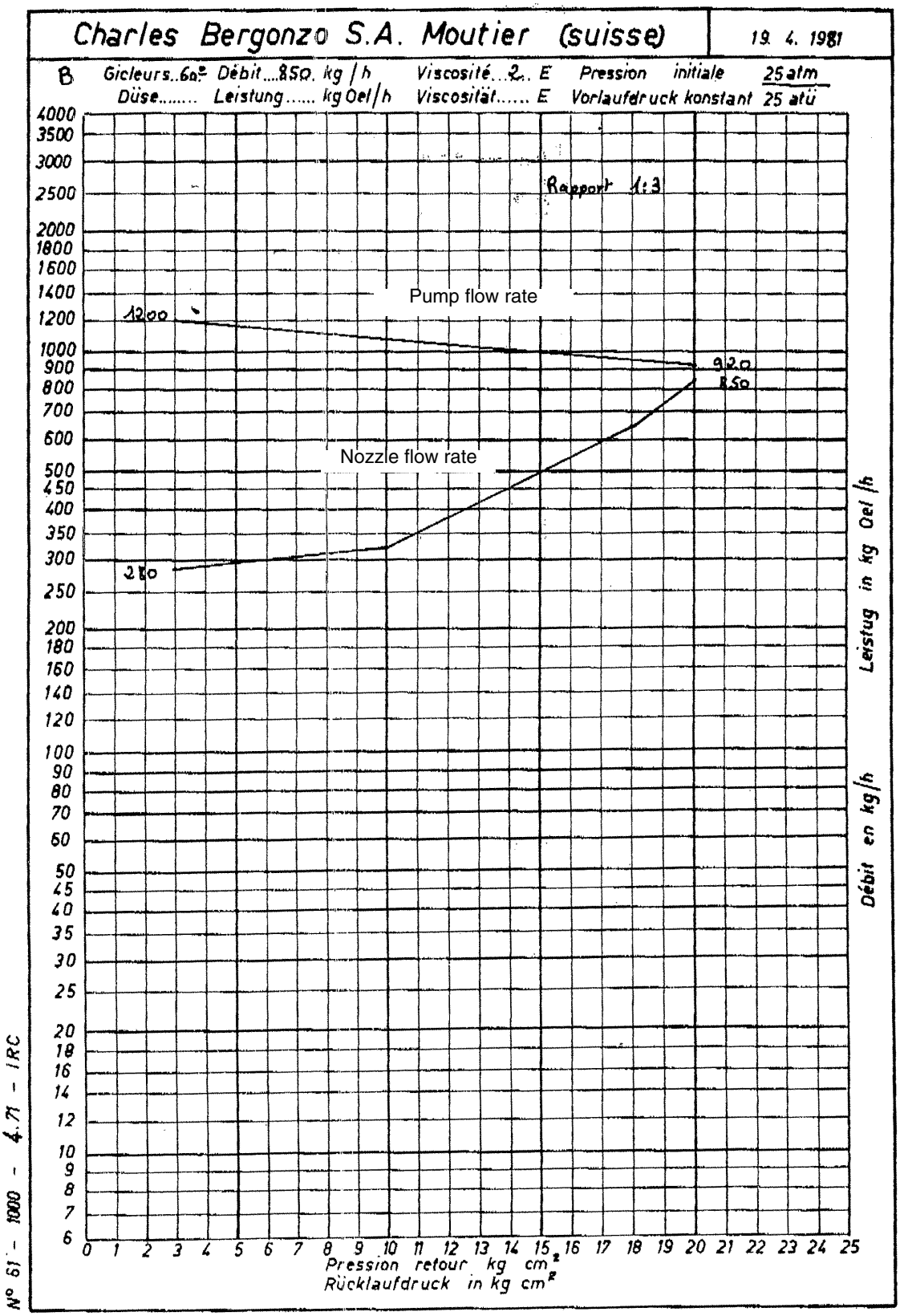

Fig. 23 - Bergonzo nozzle - example with 850kg/h nozzle

1 Once the air and gas flow rates are adjusted, turn the burner off, turn the burner on again by means of the **CM** selector to switch to the heavy oil operation (OIL, on the burner control panel (see page 28).

2 with the electrical panel open, prime the oil pump acting directly on the related **CP** contactor (see next picture): check the pump

motor rotation and keep pressing for some seconds until the oil circuit is charged;

3 bleed the air from the **M** pressure gauge port (Fig. 24) by loosing the cap without removing it, then release the contactor.

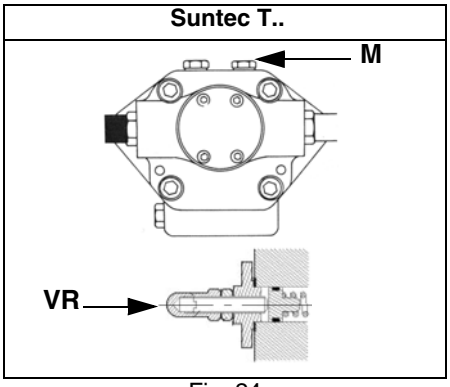

Fig. 24

4 Before starting the burner up, drive the high flame actuator microswitch matching the low flame one (in order to let the burner operates at the lowest output) to achieve safely the high flame stage.

5 record the high flame value set during the gas operation adjustments (see previous paragraphs);

6 start the burner up by means of the thermostat series and wait until the pre-purge time comes to an end and that the bruner starts up;

7 drive the burner to high flame stage, by means fo the thermostat **TAB**.

8 Then move progressively the microswitch to higher values until it reaches the high flame position; always check the combustion values and eventually adjusting the oil pressure (see next step).

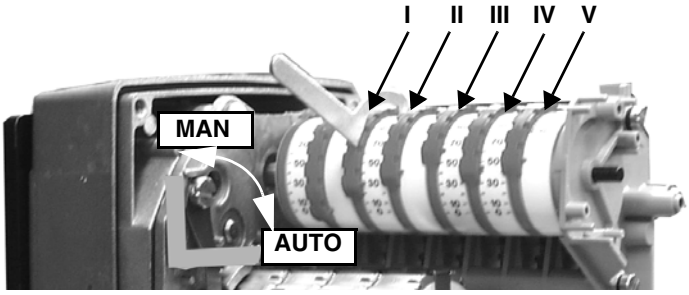

Actuator cams

I	High flame
II	Stand-by and Ignition
III	Low flame (gas)
IV	Low flame (oil)
V	Stroke limitation

9 the nozzle suplly pressureis already factory-set and must not be changed. Only if necessary, adjust the supply pressure as follows (see related paragraph); insert a pressure gauge into the port showed on Fig. 25 and act on on the pump adjusting screw **VR** (see Fig. 24 and page 17) as to get the nozzle pressure at 25bar (Bergonzo nozzle - see page 34).

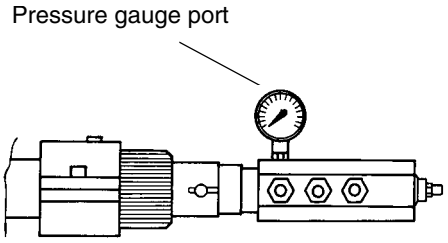

Fig. 25

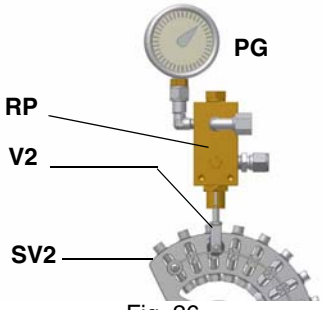

Fig. 26

10 in order to get the maximum oil flow rate, adjust the pressure (reading its value on the **PG** pressure gauge) without changing the air flow rate set during the gas operation adjustments (see previous paragraph): checking always the combustion parameters, the adjustment is to be performed by means of the **SV2** adjusting cam screw (see picture) when the cam has reached the high flame position.

11 as for the point-to-point regulation in order to set the cam foil shape, move the oil low flame microswitch (cam IV) a little lower than the maximum position (90°);

12 set the **TAB** thermostat to the minimum in order that the actuator moves progressively towards the low flame position;

13 move cam IV (oil low flame) towards the minimum to move the actuator towards the low flame until the two bearings find the adjusting screw that refers to a lower position: screw **V2** to increase the rate, unscrew to decrease, in order to get the pressure as showed on chart/diagram on page 34, according to the requested rate.

14 Move again cam V towards the minimum to meet the next screw on the adjusting cam and repeat the previous step; go on this way as to reach the desired low flame point.

15 The low flame position must never match the ignition position that is why cam **IV** must be set 20°- 30° more than the ignition position.

16 Set cam V (“stroke limitation cam”) 5° higher than the lowest “low flame cam” (cam III or cam IV).

17 Turn the burner off; then start it up again. If the adjustment is not correct, repeat the previous steps.

18 Replace the actuator and control panel covers.

As far as fully-modulating burners, see paragraph “Fully modulating burners” on page 34.

Heavy oil gun

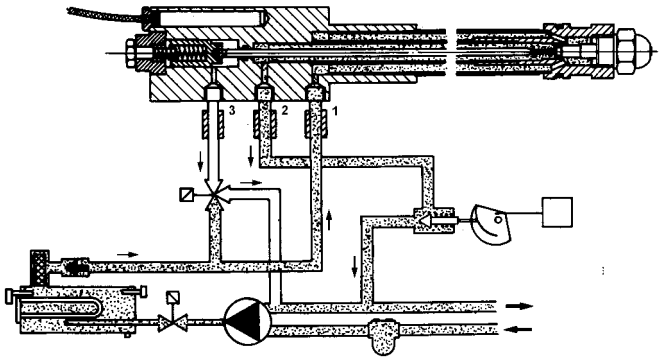

Fig. 27 - Nozzle pre-purge

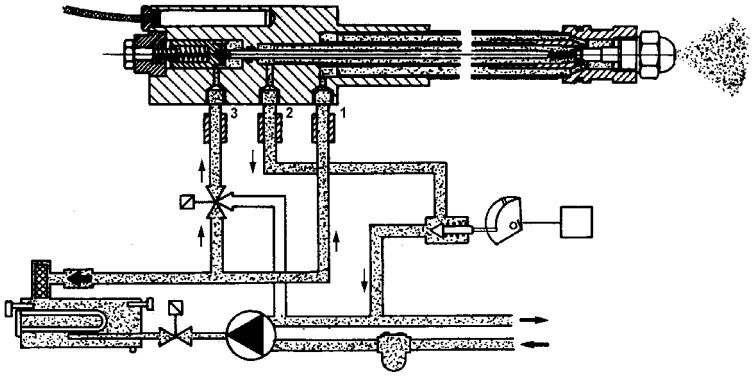

Fig. 28 -Ignition

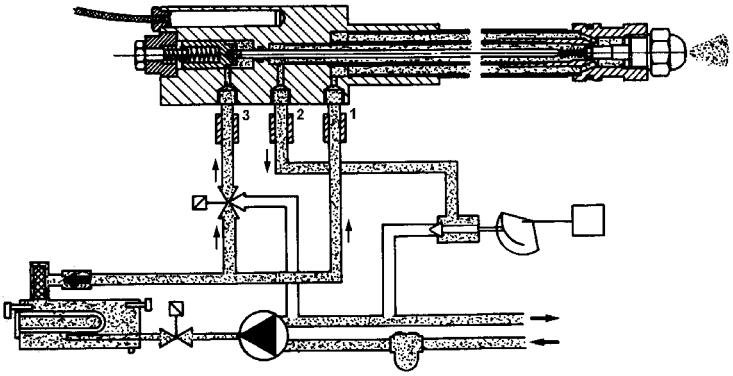

Fig. 29 -High flame

PART II: OPERATION

LIMITATIONS OF USE

THE BURNER IS AN APPLIANCE DESIGNED AND CONSTRUCTED TO OPERATE ONLY AFTER BEING CORRECTLY CONNECTED TO A HEAT GENERATOR (E.G. BOILER, HOT AIR GENERATOR, FURNACE, ETC.), ANY OTHER USE IS TO BE CONSIDERED IMPROPER AND THEREFORE DANGEROUS.

THE USER MUST GUARANTEE THE CORRECT FITTING OF THE APPLIANCE, ENTRUSTING THE INSTALLATION OF IT TO QUALIFIED PERSONNEL AND HAVING THE FIRST COMMISSIONING OF IT CARRIED OUT BY A SERVICE CENTRE AUTHORISED BY THE COMPANY MANUFACTURING THE BURNER.

A FUNDAMENTAL FACTOR IN THIS RESPECT IS THE ELECTRICAL CONNECTION TO THE GENERATOR'S CONTROL AND SAFETY UNITS (CONTROL THERMOSTAT, SAFETY, ETC.) WHICH GUARANTEES CORRECT AND SAFE FUNCTIONING OF THE BURNER.

THEREFORE, ANY OPERATION OF THE APPLIANCE MUST BE PREVENTED WHICH DEPARTS FROM THE INSTALLATION OPERATIONS OR WHICH HAPPENS AFTER TOTAL OR PARTIAL TAMPERING WITH THESE (E.G. DISCONNECTION, EVEN PARTIAL, OF THE ELECTRICAL LEADS, OPENING THE GENERATOR DOOR, DISMANTLING OF PART OF THE BURNER).

NEVER OPEN OR DISMANTLE ANY COMPONENT OF THE MACHINE.

OPERATE ONLY THE MAIN SWITCH, WHICH THROUGH ITS EASY ACCESSIBILITY AND RAPIDITY OF OPERATION ALSO FUNCTIONS AS AN EMERGENCY SWITCH, AND ON THE RESET BUTTON.

IN THE EVENT OF REPEATED LOCKOUTS, DO NOT PERSIST WITH THE RESET BUTTON AND CONTACT QUALIFIED PERSONNEL WHO WILL PROCEED TO ELIMINATE THE MALFUNCTION.

WARNING: DURING NORMAL OPERATION THE PARTS OF THE BURNER NEAREST TO THE GENERATOR (COUPLING FLANGE) CAN BECOME VERY HOT, AVOID TOUCHING THEM SO AS NOT TO GET BURNT.

OPERATION

⚠	***ATTENTION:*** **before starting the burner up, be sure that the manual cutoff valves are open and check that the pressure upstream the gas train complies the value quoted on paragraph "Technical specifications".**

- Choose the type of fuel by turning the burner switch, on the burner control panel.
  CAUTION: if the fuel chosen is heavy oil, be sure the cutoff valves on the supply and return pipes are open.
- Check the control box is not locked (signalling light on); if so, reset it by means of the reset pushbutton.
- Check the series of thermostats and pressure switches turn the burner to on.

Gas operation

- Check the gas feeding pressure is sufficient (signalling lamp on).

Burners provided with gas proving system: the gas proving system test begins; when the test is performed the proving system LED turns on. At the end of the test, the burner staring cycle begins: in case of leakage in a valve, the gas proving system stops the burner and the related lamp turns on. Reset it, by means of the reset pushbutton on the device, in burners with VPS504 (pushbutton **LB** in picture), or by the pushbutton on the burner panel if this one is fitted with LDU11 proving system.

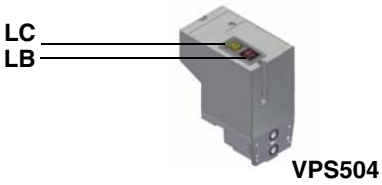

NOTE: if the burner is fitted with Dungs VPS504, the pre-purgue phase starts once the gas proving system is successfully performed. Since the pre-purgue phase must be carried out with the maximum air rate, the control box drives the actuator opening and when the maximum opening position is achieved, the pre-purge time counting starts.

- At the end of the pre-purge time, the actuator drives the complete closing (ignition with gas position) and, as this is achieved the ignition transformer is energised; the ignitor gas valves and the main gas valves open.
- Few seconds after the valves opening, the transformer is de-energised and the related lamp turns off.
- The burner is now operating, meanwhile the actuator goes to the high flame position and, after some seconds, the two-stage operation begins; the burner is driven automatically to high flame or low flame, according to the plant requirements.

Operation in high or low flame is signalled by the related lamp on the burner control panel.

Heavy oil operation

- The fan motor starts and the pre-purge phase as well. Since the pre-purge phase must be carried out at the maximum air rate, the control box drives the actuator opening and when the maximum opening position is reached, the pre-purge time counting starts.
- At the end of the pre-purge time, the actuator is in the oil ignition position: the ignition transformer is energised (related lamp on); the ignitor gas valves and the oil valves open. Few seconds after the valves opening, the transformer is de-energised and lamp turns off.
- The burner is now operating, meanwhile the actuator goes to the high flame position; after some seconds, the two-stage operation begins; the burner is driven automatically to high flame or low flame, according to the plant requirements.

Operation in high or low flame is signalled by the related lamps on the burner control panel.

PART III: MAINTENANCE

At least once a year carry out the maintenance operations listed below. In the case of seasonal servicing, it is recommended to carry out the maintenance at the end of each heating season; in the case of continuous operation the maintenance is carried out every 6 months.

⚠	**WARNING: ALL OPERATIONS ON THE BURNER MUST BE CARRIED OUT WITH THE MAINS DISCONNECTED AND THE FUEL MANAUL CUTOFF VALVES CLOSED!**
	ATTENTION: READ CAREFULLY THE "WARNINGS" CHAPTER AT THE BEGINNIG OF THIS MANUAL.

ROUTINE MAINTENANCE

- Clean and examine the gas filter cartridge and replace it if necesssary (see next paragraph).
- Check and clean the oil filter cartridge; replace it if necessary (see next paragraphs).
- Examine the condition of the oil flexible hoses and check for possible leaks.
- Check and clean if necessary the oil heaters and the tank, according to the fuel type and its use; remove the heaters flange fixing nuts and remove the heaters from the tank: clean by using steam or solvents and not metallic things.

CAUTION: *avoid the contact of steam, solvent and other liquids with the electric terminals of the resistor. On flanged heaters, replace the seal gasket before refitting it. Routine inspections must be carried out to determine the frequency of cleaning.*

- Clean and examine the filter inside the oil pump. Filter must be thoroughly cleaned at least once in a season to ensure correct working of the fuel unit. To remove the filter, unscrew the four screws on the cover. When reassemble, make sure that the filter is mounted with the feet toward the pump body. If the gasket between cover and pump housing should be damaged, it must be replaced. An external filter should always be installed in the suction line upstream of the fuel unit.
- Remove and clean the combustion head (page 41).
- Examine and clean the ignition electrodes, adjust and replace if necessary (see page 42).
- Examine and clean the detection probe, adjust and replace if necessary (see page 43).
- Examine the detection current (see page 43).
- Remove and clean (page 42) the heavy oil nozzle ***(Important: use solvents for cleaning, not metal utensils)*** and at the end of the maintenance procedures, after replacing the burner, turn it on and check the shape of the flame; if in doubt replace the nozzle. Where the burner is used intensively it is recommended to replace the nozzle as a preventive measure, at the begin of the operating season.
- Clean and grease joints and rotating parts.

IMPORTANT:Remove the combustion head before checking the ignition electrodes.

⚠	**CAUTION: avoid the contact of steam, solvent and other liquids with the electric terminals of the resistor. On flanged heaters, replace the seal gasket before refitting it. Periodic inspections must be carried out to determine the frequency of cleaning.**
⚠	**ATTENTION:** when servicing, if it was necessary to disassemble the gas train parts, remember to execute the gas proving test, once the gas train is reassembled, according to the procedure imposed by the law in force.

Gas filter maintenance

⚠	**ATTENTION:** Before opening the filter, close the manual cutoff valve downstream the filter and bleed the gas; check that inside the filter there is no pressurised gas.

To clean or remove the filter, proceed as follows:

1 remove the cap unscrewing the fixing screws (A);
2 remove the filtering cartridge (B), clean it using water and soap, blow it with compressed air(or replace it, if necessary)
3 replace the cartridge in its proper position taking care to place it inbetween the guides as not to hamper the cap replacement;
4 be sure to replace the Or ring into its place (C) and replace the cover fastening by the proper screws (A).

A

B

C

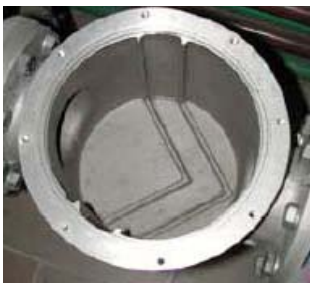

Replacing the spring in the gas valve group

To replace the spring in the gas valve group,proceed as follows:

1 Carefully twist the protection cap 1 and the O-ring 2.
2 remove the “set value” spring 3 from housing 4.
3 Replace spring 3.
4 Carefully insert the new “set value” spring. Pay attention to mount properly. First insert the spring part with smaller diameter in the housing.
5 Place O-ring 2 in protective cap 1. Screw in the protective cap with the O-ring in it.

Stick the adhesive label for spring identification on the type plate.

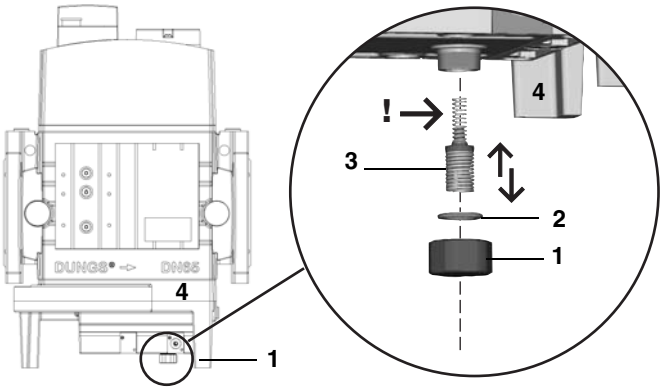

DUNGS MBC..SE

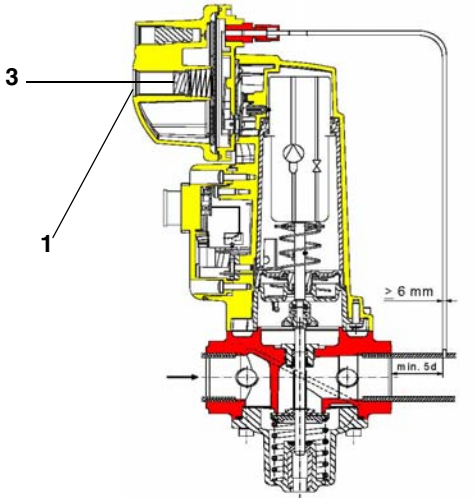

SKP Siemens actuator

Self-cleaning filter

Fitted only on high viscosity oil burners. Periodically turn the knob to clean the filter.

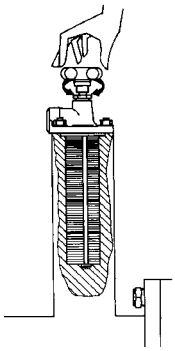

Removing the combustion head

1 Remove the cover **H**.
2 Slide the photoresistance out of its housing.
3 Unscrew the **V** screws that block the gas collector **G**, loosen the three joints **E** and remove the ass.y as shown on the following picture.
4 Clean the combustion head by means fo a vacuum cleaner; scrape off the scale by means fo a metallic brush.

Note: to remount the burner, floow the same procedure in the reversed order.

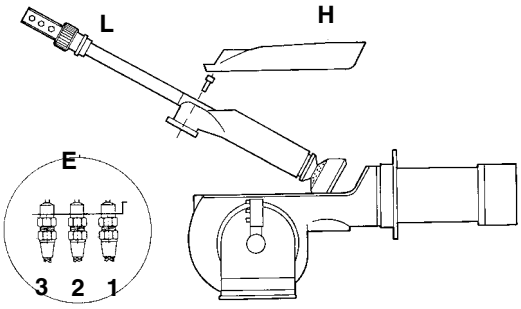

Key

1 Inlet
2 Return
3 Gun opening
E Oil piping connections
H Cover
L Oil gun

Adjusting the ignition electrode

⚠	**ATTENTION:** avoid the ignition electrode to contact metallic parts (blast tube, head, etc.), otherwise the boiler's operation would be compromised. Check the electrode position after any intervention on the combustion head.

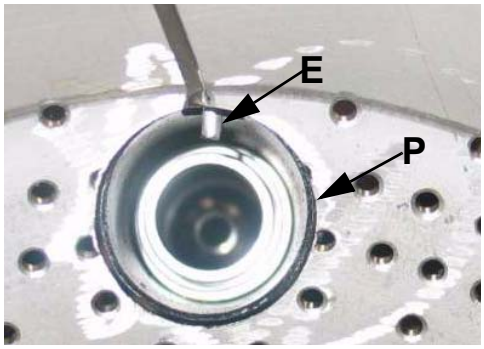

Fig. 30 - Detailed view of the diffuser with pilot (P) and ignition elecctrode (E)

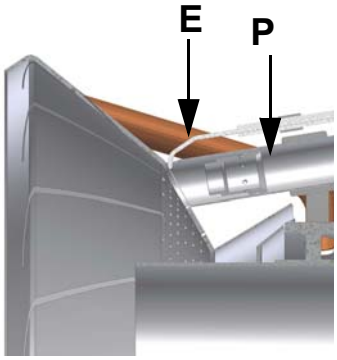

Fig. 31 - Detailed view of the combustion head with pilot (P) and ignition elecctrode (E)

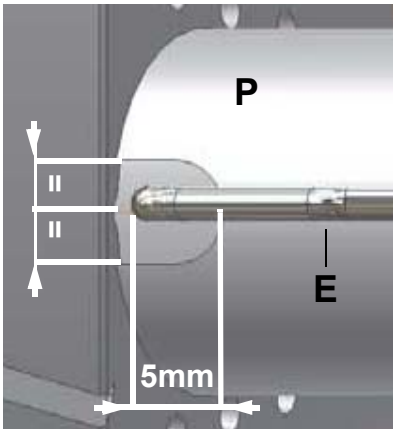

Fig. 32

Observe the values quoted on Fig. 32.

.

Replacing the ignition electrode

⚠	**ATTENTION:** avoid the ignition electrode to contact metallic parts (blast tube, head, etc.), otherwise the boiler's operation would be compromised. Check the electrode position after any intervention on the combustion head.

To replace the ignition electrode, proceed as follows:

1 remove the burner cover
2 disconnect the electrode (E) cable (CE);
3 remove the combustion head (see par. "Removing the combustion head");
4 loose screw (B) that fasten the ignition electrode (E) to the burner pilot (P);
5 remove the electrode and replace it, referring to the values quoted on Fig. 32.

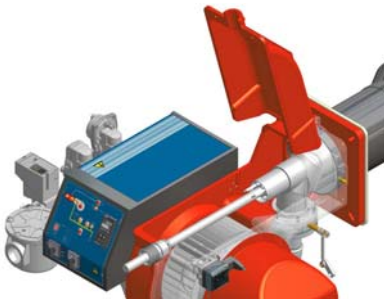

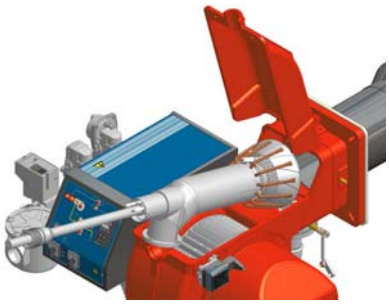

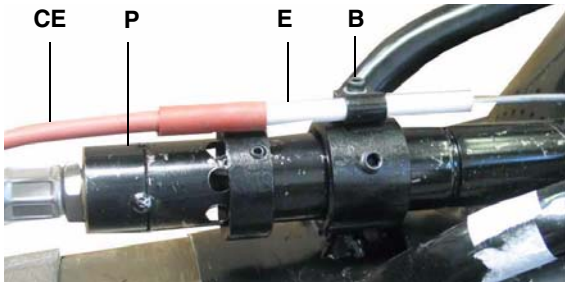

Cleaning and replacing the detection photocell

The photocell working life is about 10000 working hours (about 1 year), at max 50°C after which it must be replaced.

To clean/replace the detection photocell, proceed as follows:

1 Disconnect the system from the electrical power supply.
2 Shut off the fuel supply;
3 remove the photocell from its slot (see next figure);
4 clean the bulbe if dirty, taking care not to touch it with bare hands;
5 if necessary, replace the bulb;
6 replace the photocell into its slot.

Checking the detection current

To check the detection signal follow the scheme in Fig. 33.

If the signal is lower than the value quoted, check the position of the UV detector (photocell), the electrical contacts and, if necessary, replace the UV detector.

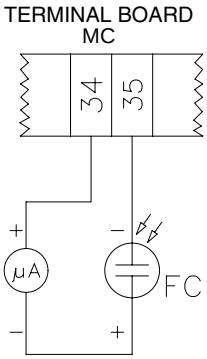

Control box	Minimum detection signal
Siemens LFL1.3..	70μA with UV detector)

Fig. 33: Detection by photocell QRA..

Seasonal stop

To stop the burner in the seasonal stop, proceed as follows:

1 turn the burner's main switch to 0 (Off position)
2 disconnect the power mains
3 close the fuel cock of the supply line

Burner disposal

In case of disposal, follow the instructions according to the laws in force in your country about the "Disposal of materials".

TROUBLESHOOTING

CAUSE / TROUBLE	THE BURNER DOESN'T START	CONTINUES WITH PRE-PRGEe	DOESN'T START AND LOCK-OUT	DOESN'T START AND REPEATS THE CYCLE	STARTS AND REPEATS THE CYCLE	DOESN'T SWITCH TO HI FLAME	LOCKOUT DURING OPERATION	TURNS OFF AND REPEATS CYCLE DURING OPERATION
MAIN SWITCH OPEN	●							
LACK OF GAS	●							
HIGH GAS PRESSURE SWITCH DEFECTIVE	●							
DEFECTIVE THERMOSTAT	●							
OVERLOAD TRIPPED INTERVENTION	●							
AUXILIARIES FUSES INTERRUPTED	●							
DEFECTIVE AIR PRESSURE SWITCH	●							
DEFECTIVE CONTROL BOX	●		●				●	
DEFECTIVE ACTUATOR	●	●	●				●	
AIR PRESSURE SWITCH FAULT OR BAD SETTING		●						
GAS PRESSURE SWITCH BAD SETTING							●	
IGNITION TRANSFORMER FAULT			●	●	●			●
DETECTION ELECTRODE BAD POSITION			●					
BUTTERFLY VALVE BAD SETTING			●					
DEFECTIVE GAS GOVERNOR			●					
DEFECTIVE GAS GOVERNOR				●	●			●
DEFECTIVE HI-LO FLAME THERMOSTAT						●		
ACTUATOR CAM WRONG SETTING						●		
PHOTODETECTOR FAULT OR WRONG SETTING							●	

ELECTRICAL WIRING DIAGRAMS

WARNING
1 - Electrical supply 400V 50Hz 3N a.c.
2 - Do not reverse phase with neutral
3 - Ensure burner is properly earthed

Wiring diagram 12-143

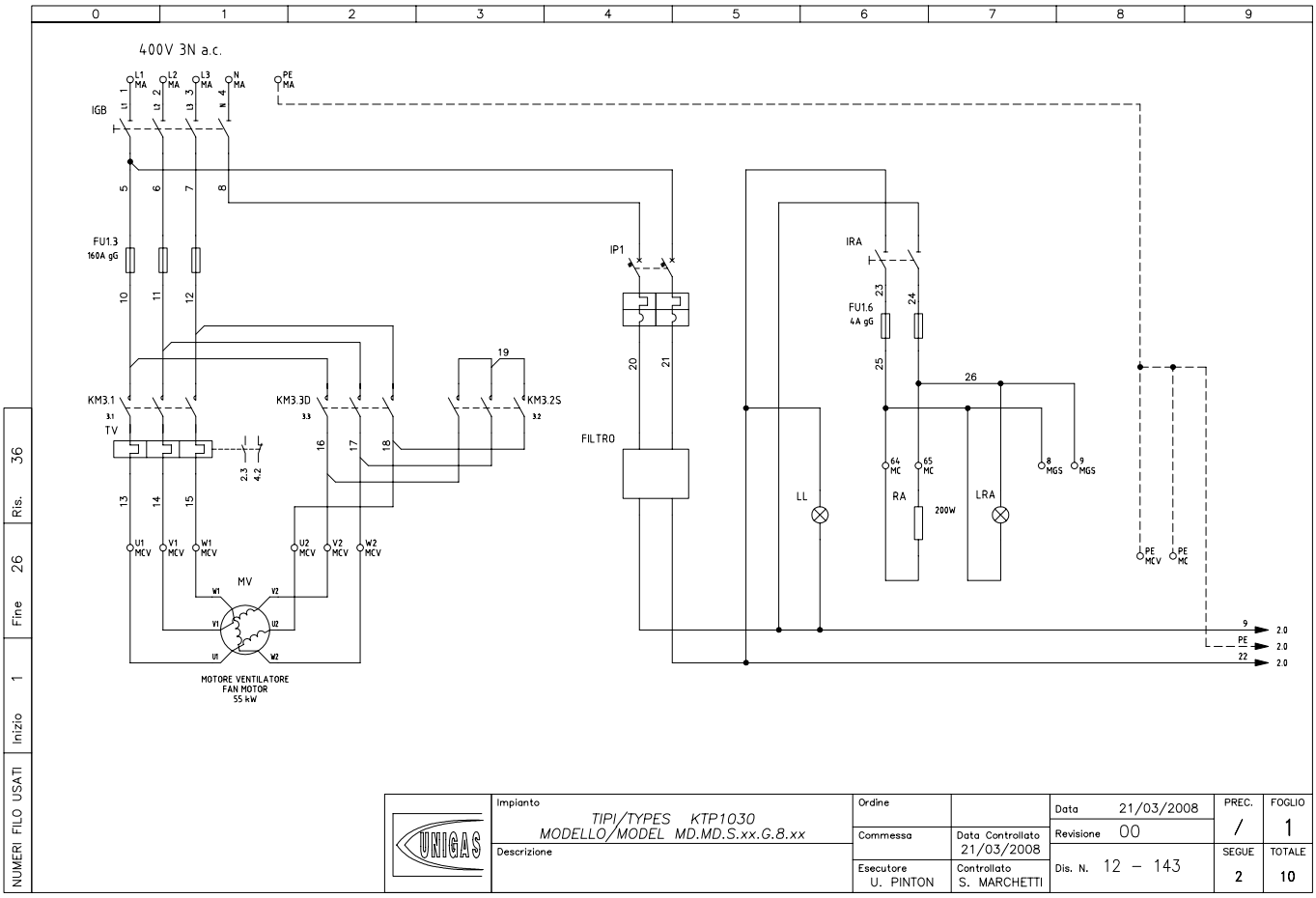

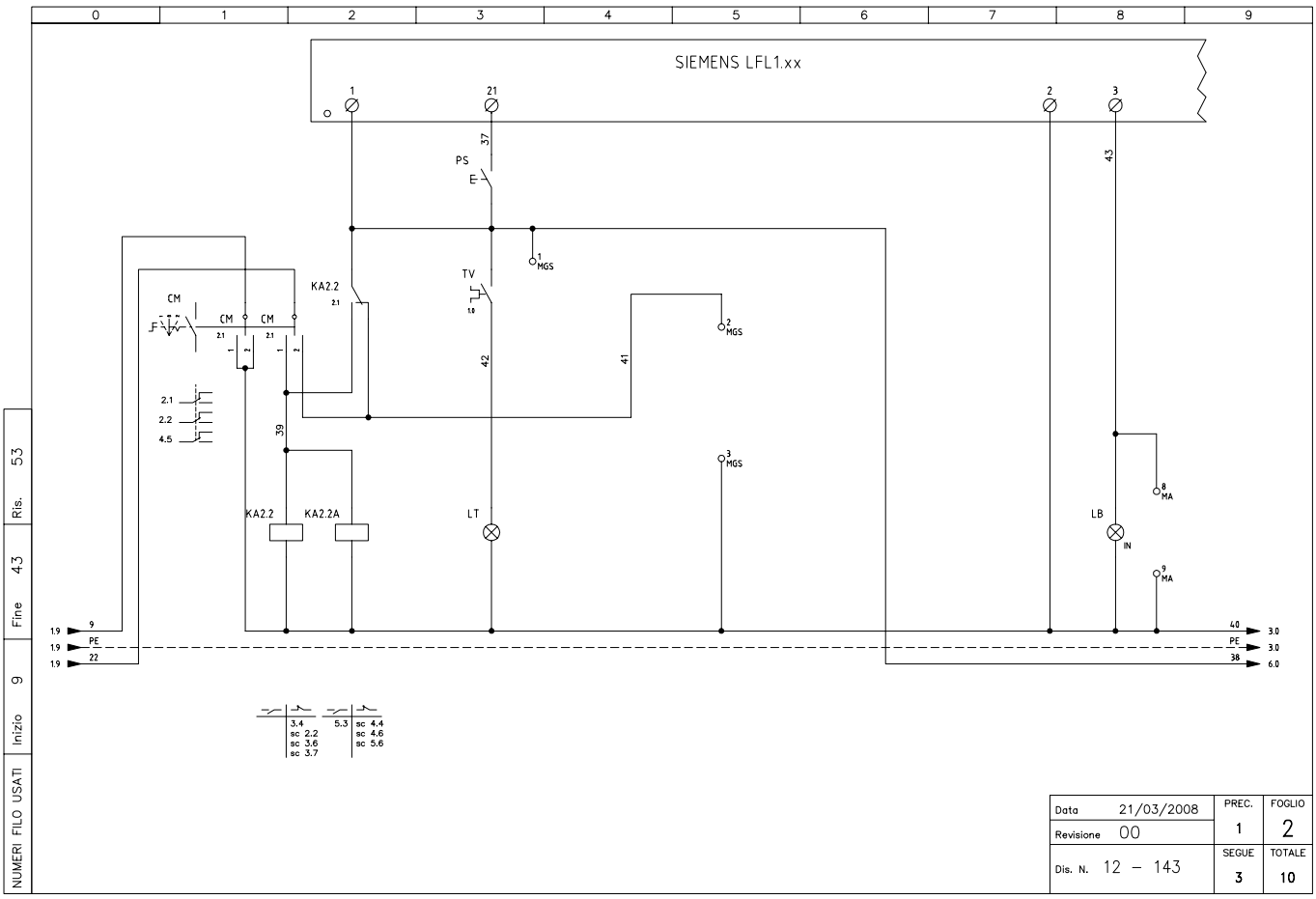

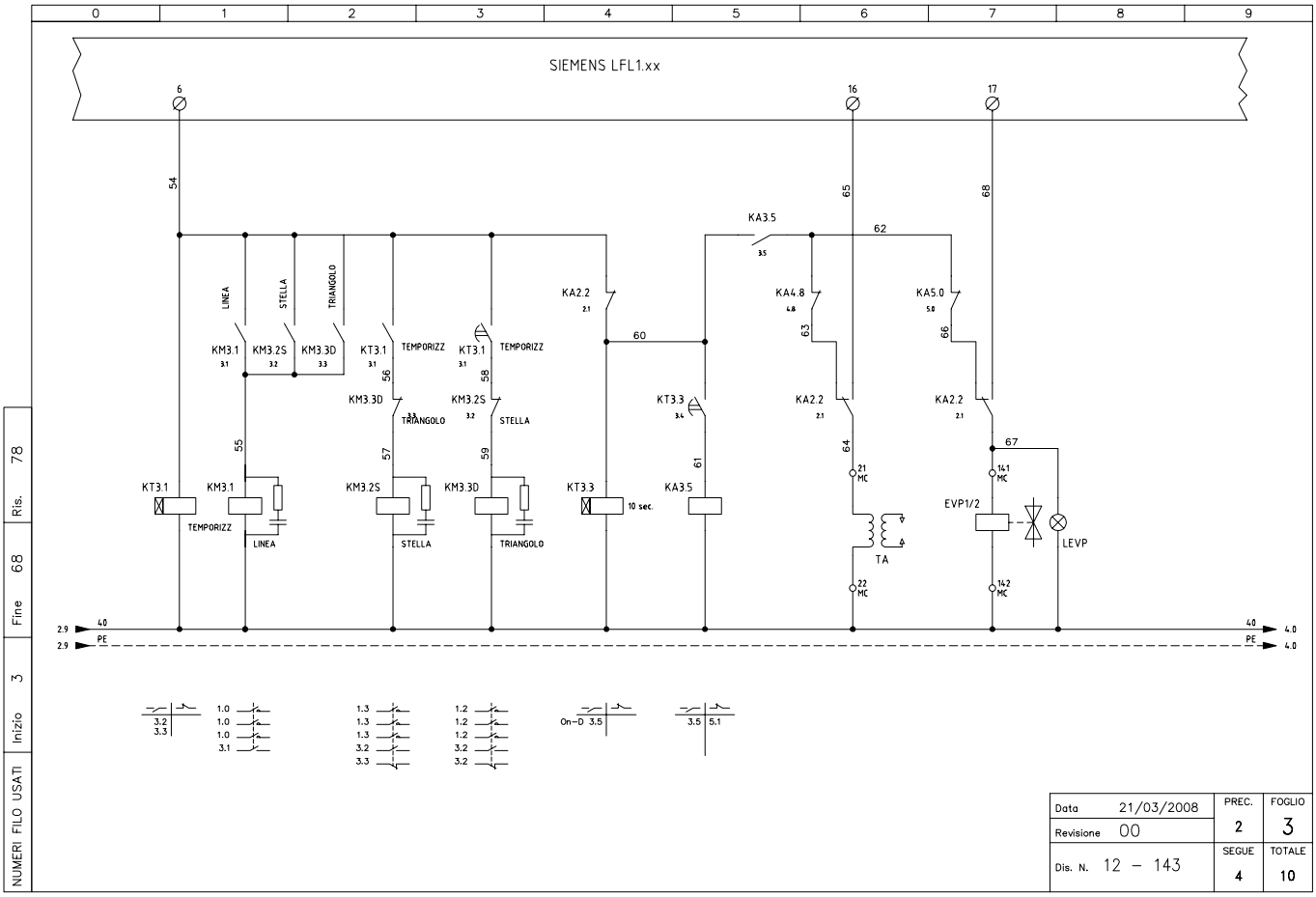
SIEMENS LFL1.xx
KA3.5
KA2.2
KA4.8
KA5.0
KM3.1
KM3.2S
KM3.3D
KT3.1
KT3.3
TEMPORIZZ
LINEA
STELLA
TRIANGOLO
10 sec.
TA
EVP1/2
LEVP
PE
Data 21/03/2008
Revisione 00
Dis. N. 12 – 143
PREC. 2
FOGLIO 3
SEGUE 4
TOTALE 10
NUMERI FILO USATI
Inizio 3
Fine 68
Ris. 78

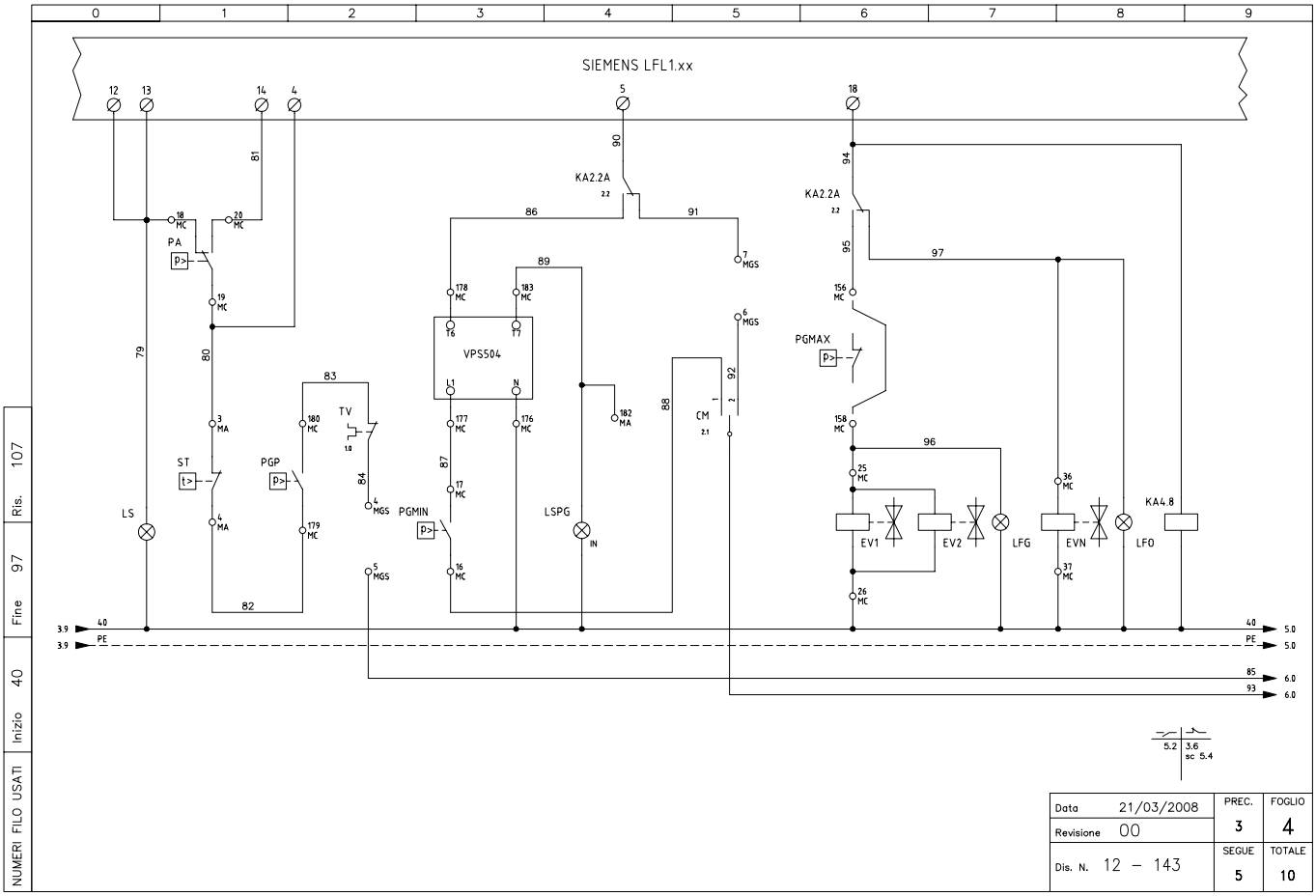
SIEMENS LFL1.xx
KA2.2A
PA
ST
PGP
LS
TV
VPS504
PGMIN
LSPG
CM
PGMAX
EV1
EV2
LFG
EVN
LFO
KA4.8
PE
Data 21/03/2008
Revisione 00
Dis. N. 12 – 143
PREC. 3
FOGLIO 4
SEGUE 5
TOTALE 10
NUMERI FILO USATI
Inizio 40
Fine 97
Ris. 107

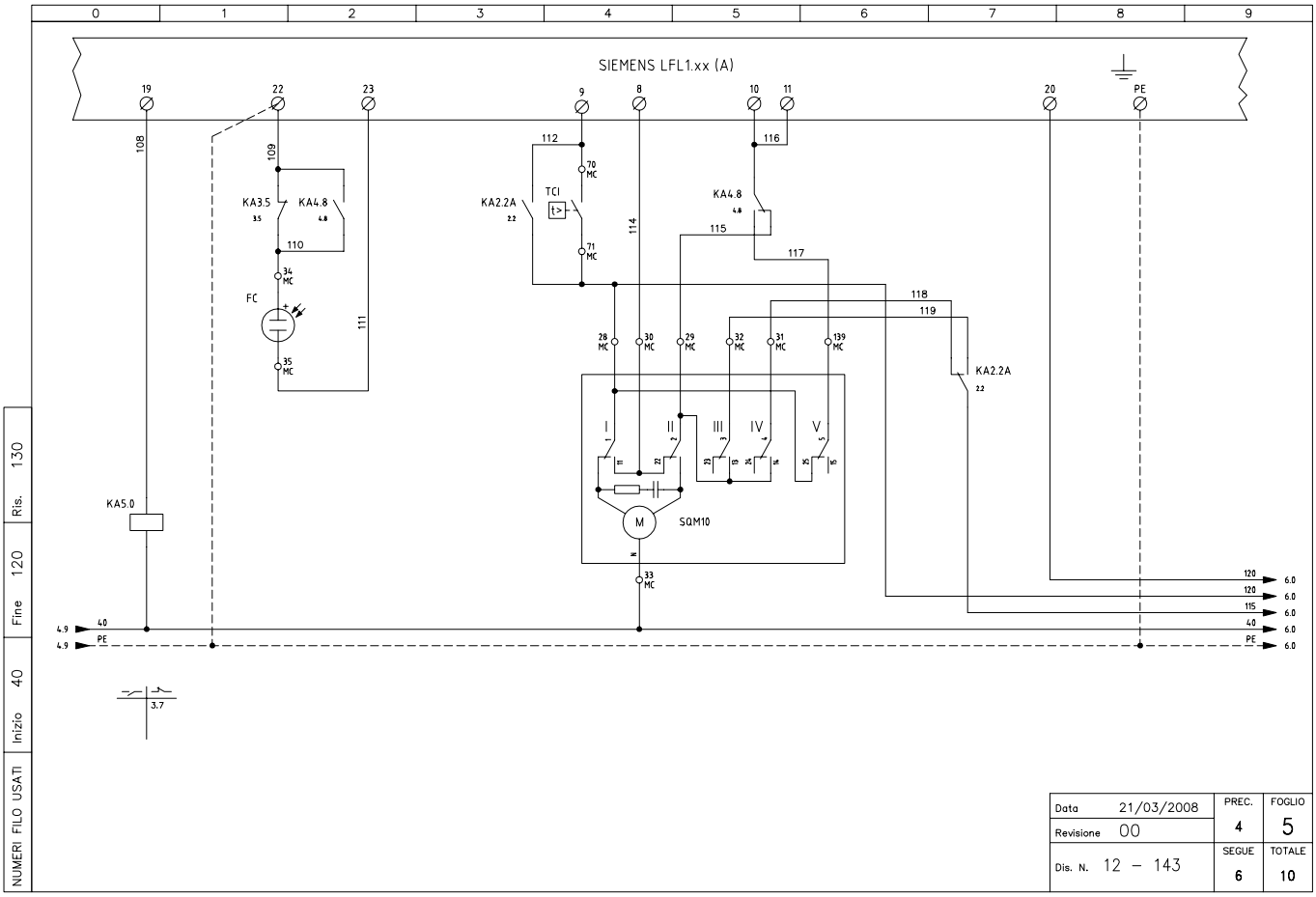
SIEMENS LFL1.xx (A)
KA3.5
KA4.8
FC
KA2.2A
TCI
KA5.0
SQM10
NUMERI FILO USATI
Inizio 40
Fine 120
Ris. 130
Data 21/03/2008
Revisione 00
Dis. N. 12 – 143
PREC. 4
FOGLIO 5
SEGUE 6
TOTALE 10

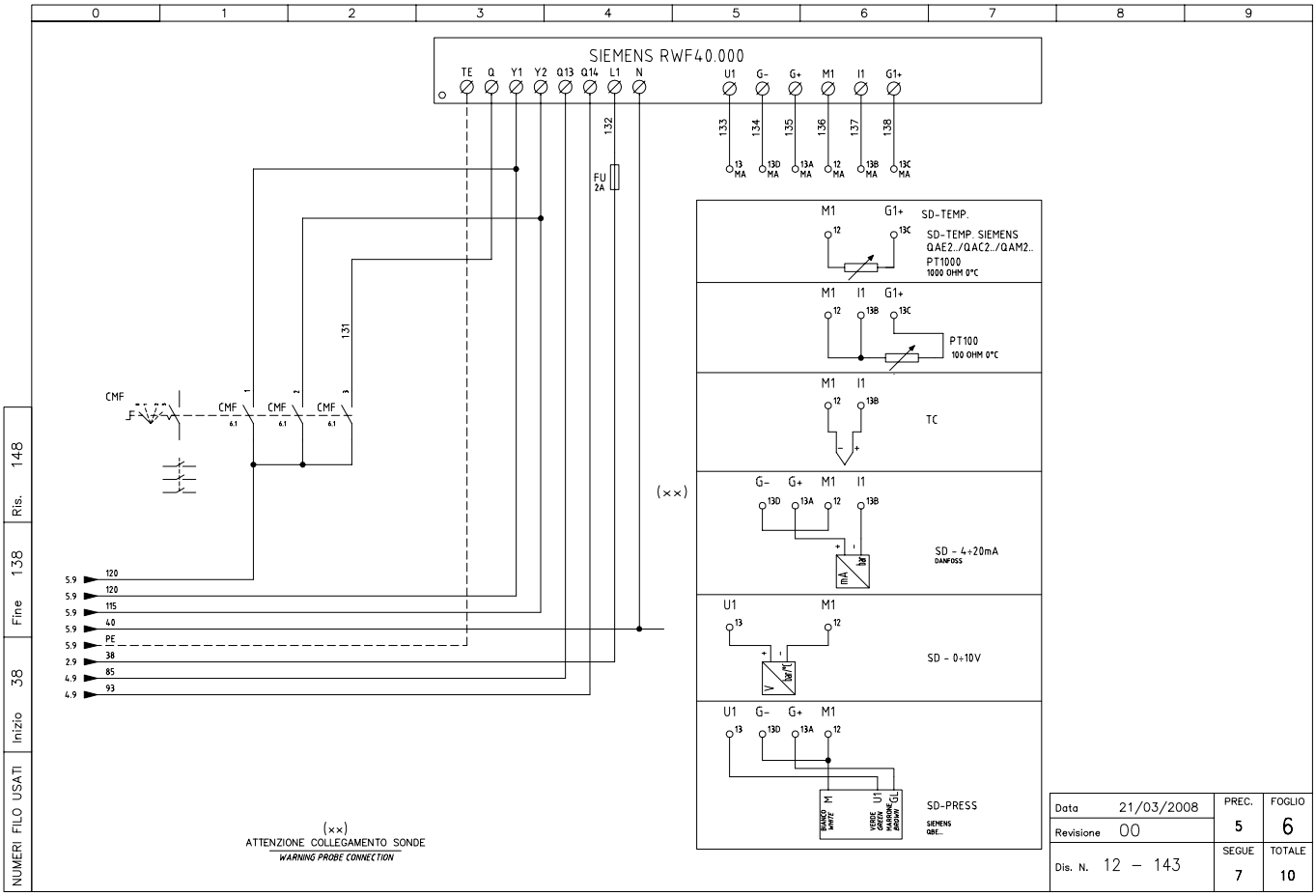
SIEMENS RWF40.000
FU 2A
CMF
SD-TEMP.
SD-TEMP. SIEMENS QAE2../QAC2../QAM2..
PT1000
1000 OHM 0°C
PT100
100 OHM 0°C
TC
SD - 4÷20mA
DANFOSS
SD - 0÷10V
SD-PRESS
SIEMENS QBE..
(××)
ATTENZIONE COLLEGAMENTO SONDE
WARNING PROBE CONNECTION
NUMERI FILO USATI
Inizio 38
Fine 138
Ris. 148
Data 21/03/2008
Revisione 00
Dis. N. 12 – 143
PREC. 5
FOGLIO 6
SEGUE 7
TOTALE 10

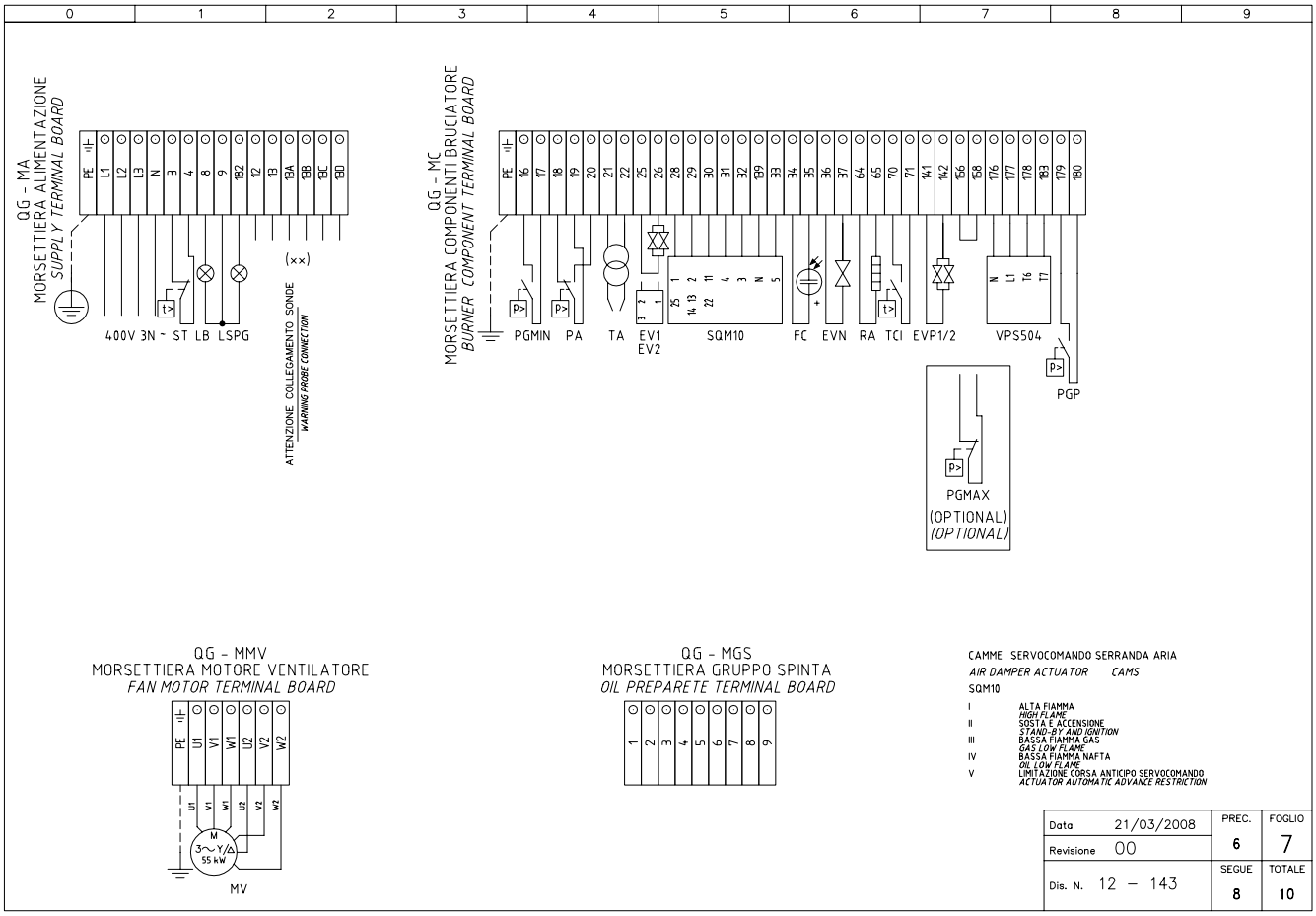

SIGLA/ITEM	FOGLIO/SHEET	FUNZIONE	FUNCTION
CM	2	COMMUTATORE FUNZIONAMENTO 1)GAS 0)SPENTO 2)NAFTA	MANUAL OPERATION SWITCH 1)GAS 0)SPENTO 2)OIL
CMF	6	COMMUT. MANUALE FUNZ. 0)FERMO 1)ALTA FIAMMA 2)BASSA FIAMMA 3)AUTOMATICO	MANUAL SWITCH 0)OFF 1)HIGH FLAME 2)LOW FLAME 3)AUTOMATIC
EV1	4	ELETTROVALVOLA GAS LATO RETE (O GRUPPO VALVOLE)	UPSTREAM GAS SOLENOID VALVE (OR VALVES GROUP)
EV2	4	ELETTROVALVOLA GAS LATO BRUCIATORE (O GRUPPO VALVOLE)	DOWNSTREAM GAS SOLENOID VALVE (OR VALVES GROUP)
EVN	4	ELETTROVALVOLA NAFTA	OIL SOLENOID VALVE
EVP1/2	3	ELETTROVALVOLE PILOTA GAS	PILOT GAS ELECTRO-VALVES
FC	5	SONDA UV RILEVAZIONE FIAMMA	UV FLAME DETECTOR
FILTRO	1	FILTRO ANTIDISTURBO	ANTIJAMMING FILTER
FU	6	FUSIBILE	FUSE
FU1.3	1	FUSIBILI LINEA MOTORE VENTILATORE	FAN MOTOR LINE FUSES
FU1.6	1	FUSIBILE LINEA RESISTENZE AUSILIARIE	LINE AUXILIARY RESISTORS FUSE
IGB	1	INTERRUTTORE GENERALE CON BLOCCO PORTA	MAIN SWITCH WITH DOOR INTERLOCK
IP1	1	MAGNETOTERMICO PROTEZIONE LINEA AUSILIARI	AUXILIARY SUPPLY PROTECTION MAGNETOTHERMIC
IRA	1	INTERRUTTORE RESISTENZE AUSILIARIE	AUXILIARY RESISTORS SWITCH
KA2.2	2	RELE' AUSILIARIO	AUXILIARY RELAY
KA2.2A	2	RELE' AUSILIARIO	AUXILIARY RELAY
KA3.5	3	RELE' AUSILIARIO	AUXILIARY RELAY
KA4.8	4	RELE' AUSILIARIO	AUXILIARY RELAY
KA5.0	5	RELE' AUSILIARIO	AUXILIARY RELAY
KM3.1	3	CONTATTORE MOTORE VENTILATORE (LINEA)	FAN MOTOR CONTACTOR (LINE)
KM3.2S	3	CONTATTORE MOTORE VENTILATORE (STELLA)	FAN MOTOR CONTACTOR (STAR)
KM3.3D	3	CONTATTORE MOTORE VENTILATORE (TRIANGOLO)	FAN MOTOR CONTACTOR (DELTA)
KT3.1	3	TEMPORIZZATORE STELLA/TRIANGOLO	STAR/DELTA DELAYED RELAY
KT3.3	3	RELE' TEMPORIZZATORE	DELAYED RELAY
LB	2	LAMPADA SEGNALAZIONE BLOCCO BRUCIATORE	INDICATOR LIGHT FOR BURNER LOCK-OUT
LEVP	3	LAMPADA SEGNALAZIONE APERTURA EVP1/2	INDICATOR LIGHT FOR OPENING OF ELECTRO-VALVES EVP1/2
LFG	4	LAMPADA SEGNALAZIONE FUNZIONAMENTO BRUCIATORE A GAS	BURNER GAS OPERATION INDICATOR LIGHT
LFO	4	LAMPADA SEGNALAZIONE FUNZIONAMENTO BRUCIATORE A NAFTA	BURNER OIL OPERATION INDICATOR LIGHT
LL	1	QUADRO IN TENSIONE	SUPPLY ELECTRIC BOX
LRA	1	LAMPADA SEGNALAZIONE FUNZIONAMENTO RESISTENZE AUSILIARIE	INDICATOR LIGHT FOR OPERATION AUXILIARY RESISTORS
LS	4	LAMPADA SEGNALAZIONE SOSTA BRUCIATORE	INDICATOR LIGHT FOR BURNER STAND-BY
LSPG	4	LAMPADA SEGNALAZIONE BLOCCO CONTROLLO TENUTA VALVOLE	INDICATOR LIGHT FOR LEAKAGE OF VALVES

Data 21/03/2008		PREC. 7	FOGLIO 8
Revisione 00			
Dis. N. 12 - 143		SEGUE 9	TOTALE 10

0	1	2	3	4	5	6	7	8	9

SIGLA/ITEM	FOGLIO/SHEET	FUNZIONE	FUNCTION
LT	2	LAMPADA SEGNALAZIONE BLOCCO TERMICO MOTORE VENTILATORE	INDICATOR LIGHT FOR FAN OVERLOAD TRIPPED
MV	1	MOTORE VENTILATORE	FAN MOTOR
PA	4	PRESSOSTATO ARIA	AIR PRESSURE SWITCH
PGMAX	4	PRESSOSTATO GAS DI MASSIMA PRESSIONE (OPTIONAL)	MAXIMUM PRESSURE GAS SWITCH (OPTIONAL)
PGMIN	4	PRESSOSTATO GAS DI MINIMA PRESSIONE	MINIMUM GAS PRESSURE SWITCH
PGP	4	PRESSOSTATO PILOTA GAS	PILOT MINIMUM GAS PRESSURE SWITCH
PS	2	PULSANTE SBLOCCO FIAMMA	LOCK-OUT RESET BUTTON
PT100	6	SONDA DI TEMPERATURA	TEMPERATURE PROBE
RA	1	RESISTENZE AUSILIARIE	AUXILIARY RESISTORS
SD-PRESS	6	SONDA DI PRESSIONE	PRESSURE PROBE
SD-TEMP.	6	SONDA DI TEMPERATURA	TEMPERATURE PROBE
SD - 0÷10V	6	TRASDUTTORE USCITA IN TENSIONE	TRANSDUCER VOLTAGE OUTPUT
SD - 4÷20mA	6	TRASDUTTORE USCITA IN CORRENTE	TRANSDUCER CURRENT OUTPUT
SIEMENS LFL1.xx	2	APPARECCHIATURA CONTROLLO FIAMMA	CONTROL BOX
SIEMENS RWF40.000	6	REGOLATORE MODULANTE	BURNER MODULATOR
SQM10	5	SERVOCOMANDO SERRANDA ARIA	AIR DAMPER ACTUATOR
ST	4	SERIE TERMOSTATI/PRESSOSTATI	SERIES OF THERMOSTATS OR PRESSURE SWITCHES
TA	3	TRASFORMATORE DI ACCENSIONE	IGNITION TRANSFORMER
TC	6	TERMOCOPPIA	THERMOCOUPLE
TCI	5	TERMOSTATO CONSENSO IMPIANTO	PLANT CONSENT THERMOSTAT
TV	1	TERMICO MOTORE VENTILATORE	FAN MOTOR THERMAL
VPS504	4	CONTROLLO DI TENUTA VALVOLE GAS (OPTIONAL)	GAS PROVING SYSTEM (OPTIONAL)

Data 21/03/2008		PREC. 8	FOGLIO 9
Revisione 00			
Dis. N. 12 – 143		SEGUE 10	TOTALE 10

0	1	2	3	4	5	6	7	8	9

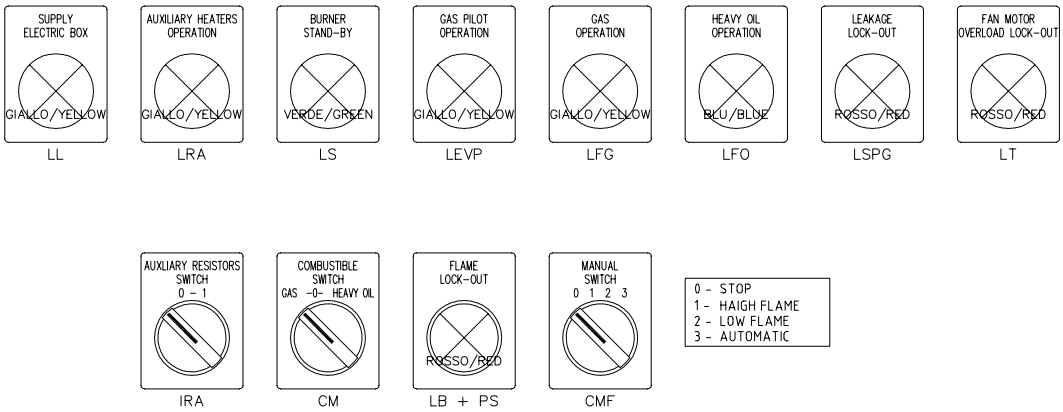

Data 21/03/2008		PREC. 9	FOGLIO 10
Revisione 00			
Dis. N. 12 – 143		SEGUE 1	TOTALE 10

Pumping Unit Electric Wiring Diagrams

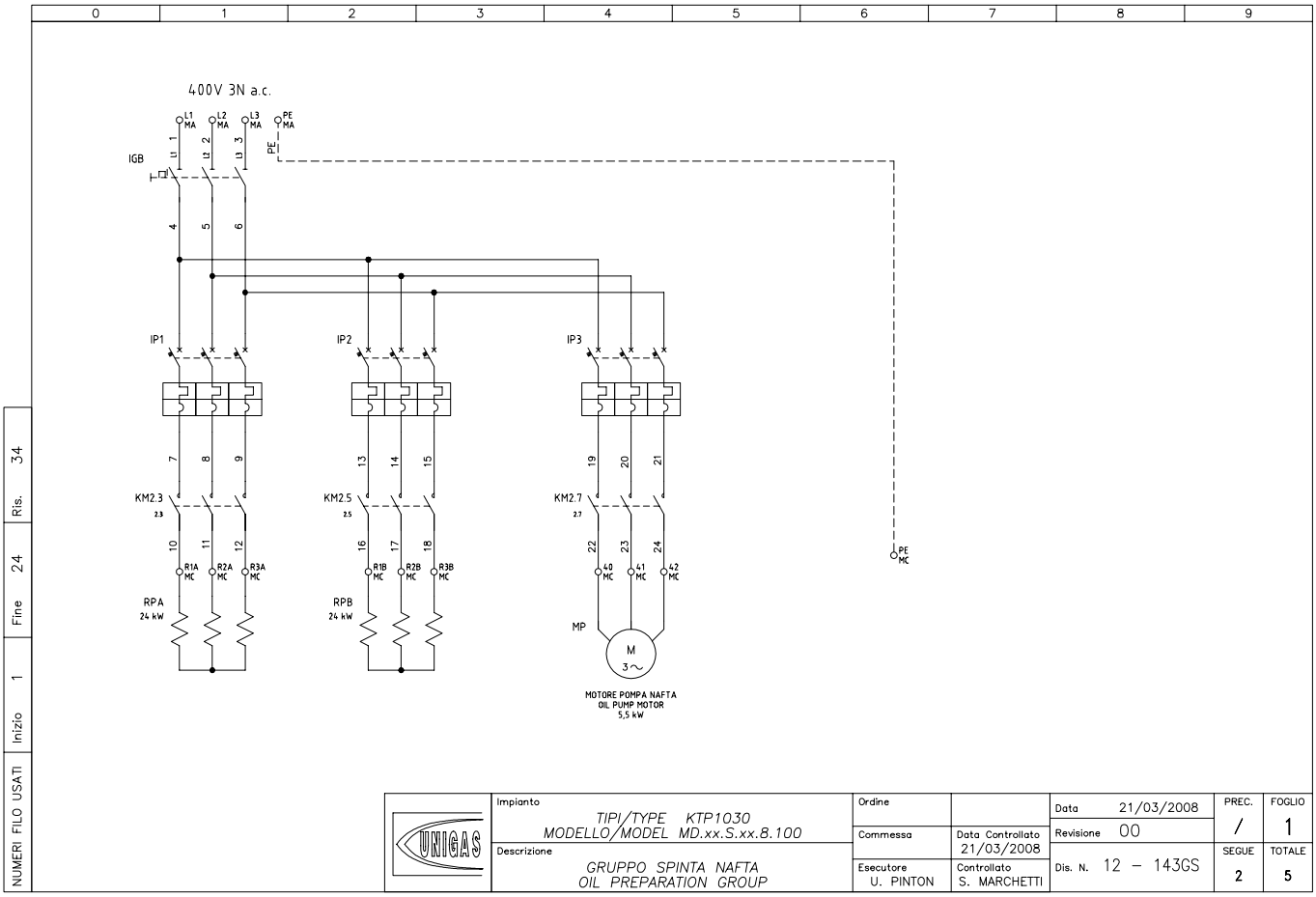

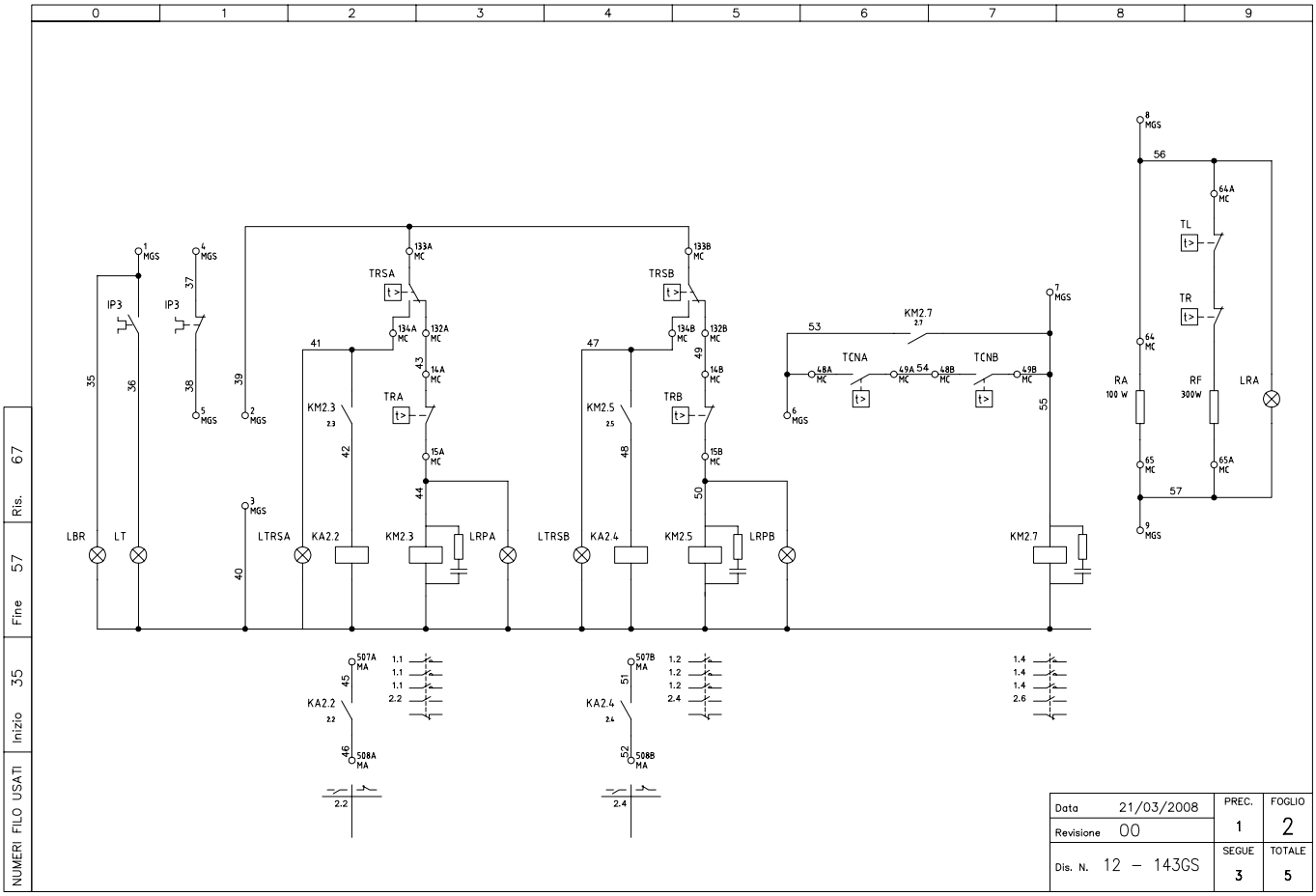

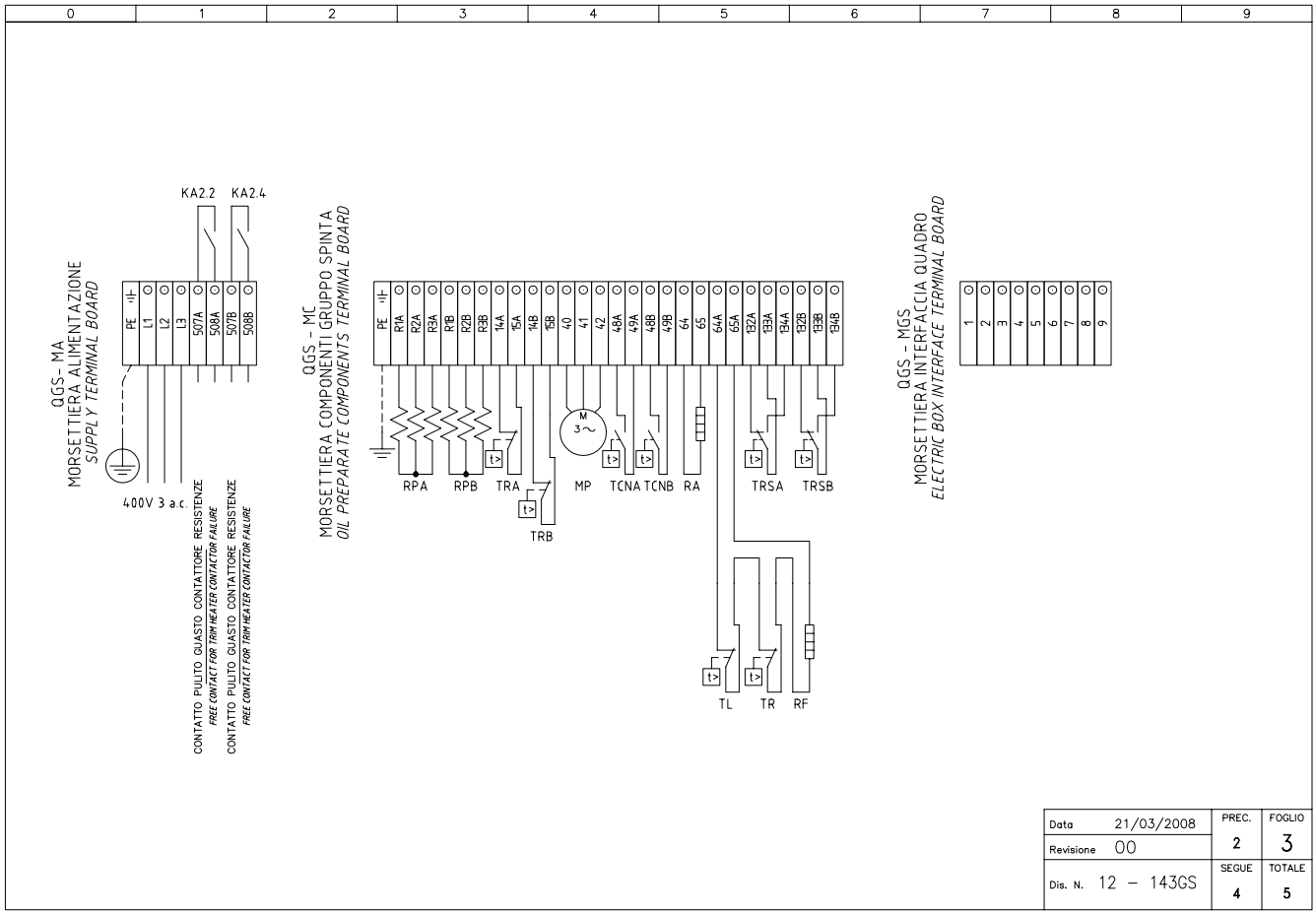

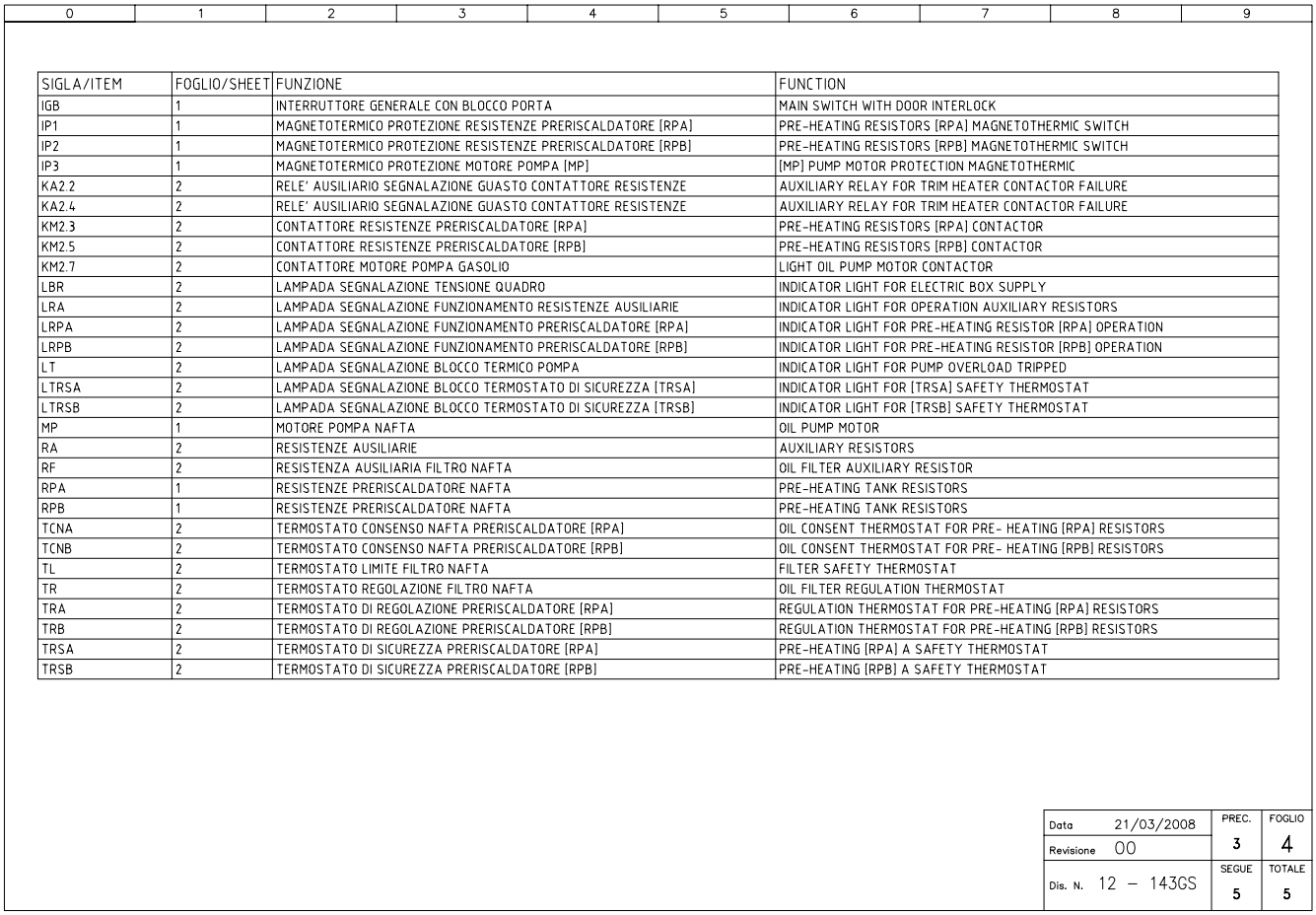

SIGLA/ITEM	FOGLIO/SHEET	FUNZIONE	FUNCTION
IGB	1	INTERRUTTORE GENERALE CON BLOCCO PORTA	MAIN SWITCH WITH DOOR INTERLOCK
IP1	1	MAGNETOTERMICO PROTEZIONE RESISTENZE PRERISCALDATORE [RPA]	PRE-HEATING RESISTORS [RPA] MAGNETOTHERMIC SWITCH
IP2	1	MAGNETOTERMICO PROTEZIONE RESISTENZE PRERISCALDATORE [RPB]	PRE-HEATING RESISTORS [RPB] MAGNETOTHERMIC SWITCH
IP3	1	MAGNETOTERMICO PROTEZIONE MOTORE POMPA [MP]	[MP] PUMP MOTOR PROTECTION MAGNETOTHERMIC
KA2.2	2	RELE' AUSILIARIO SEGNALAZIONE GUASTO CONTATTORE RESISTENZE	AUXILIARY RELAY FOR TRIM HEATER CONTACTOR FAILURE
KA2.4	2	RELE' AUSILIARIO SEGNALAZIONE GUASTO CONTATTORE RESISTENZE	AUXILIARY RELAY FOR TRIM HEATER CONTACTOR FAILURE
KM2.3	2	CONTATTORE RESISTENZE PRERISCALDATORE [RPA]	PRE-HEATING RESISTORS [RPA] CONTACTOR
KM2.5	2	CONTATTORE RESISTENZE PRERISCALDATORE [RPB]	PRE-HEATING RESISTORS [RPB] CONTACTOR
KM2.7	2	CONTATTORE MOTORE POMPA GASOLIO	LIGHT OIL PUMP MOTOR CONTACTOR
LBR	2	LAMPADA SEGNALAZIONE TENSIONE QUADRO	INDICATOR LIGHT FOR ELECTRIC BOX SUPPLY
LRA	2	LAMPADA SEGNALAZIONE FUNZIONAMENTO RESISTENZE AUSILIARIE	INDICATOR LIGHT FOR OPERATION AUXILIARY RESISTORS
LRPA	2	LAMPADA SEGNALAZIONE FUNZIONAMENTO PRERISCALDATORE [RPA]	INDICATOR LIGHT FOR PRE-HEATING RESISTOR [RPA] OPERATION
LRPB	2	LAMPADA SEGNALAZIONE FUNZIONAMENTO PRERISCALDATORE [RPB]	INDICATOR LIGHT FOR PRE-HEATING RESISTOR [RPB] OPERATION
LT	2	LAMPADA SEGNALAZIONE BLOCCO TERMICO POMPA	INDICATOR LIGHT FOR PUMP OVERLOAD TRIPPED
LTRSA	2	LAMPADA SEGNALAZIONE BLOCCO TERMOSTATO DI SICUREZZA [TRSA]	INDICATOR LIGHT FOR [TRSA] SAFETY THERMOSTAT
LTRSB	2	LAMPADA SEGNALAZIONE BLOCCO TERMOSTATO DI SICUREZZA [TRSB]	INDICATOR LIGHT FOR [TRSB] SAFETY THERMOSTAT
MP	1	MOTORE POMPA NAFTA	OIL PUMP MOTOR
RA	2	RESISTENZE AUSILIARIE	AUXILIARY RESISTORS
RF	2	RESISTENZA AUSILIARIA FILTRO NAFTA	OIL FILTER AUXILIARY RESISTOR
RPA	1	RESISTENZE PRERISCALDATORE NAFTA	PRE-HEATING TANK RESISTORS
RPB	1	RESISTENZE PRERISCALDATORE NAFTA	PRE-HEATING TANK RESISTORS
TCNA	2	TERMOSTATO CONSENSO NAFTA PRERISCALDATORE [RPA]	OIL CONSENT THERMOSTAT FOR PRE- HEATING [RPA] RESISTORS
TCNB	2	TERMOSTATO CONSENSO NAFTA PRERISCALDATORE [RPB]	OIL CONSENT THERMOSTAT FOR PRE- HEATING [RPB] RESISTORS
TL	2	TERMOSTATO LIMITE FILTRO NAFTA	FILTER SAFETY THERMOSTAT
TR	2	TERMOSTATO REGOLAZIONE FILTRO NAFTA	OIL FILTER REGULATION THERMOSTAT
TRA	2	TERMOSTATO DI REGOLAZIONE PRERISCALDATORE [RPA]	REGULATION THERMOSTAT FOR PRE-HEATING [RPA] RESISTORS
TRB	2	TERMOSTATO DI REGOLAZIONE PRERISCALDATORE [RPB]	REGULATION THERMOSTAT FOR PRE-HEATING [RPB] RESISTORS
TRSA	2	TERMOSTATO DI SICUREZZA PRERISCALDATORE [RPA]	PRE-HEATING [RPA] A SAFETY THERMOSTAT
TRSB	2	TERMOSTATO DI SICUREZZA PRERISCALDATORE [RPB]	PRE-HEATING [RPB] A SAFETY THERMOSTAT

Data 21/03/2008	PREC. 3	FOGLIO 4
Revisione 00		
Dis. N. 12 – 143GS	SEGUE 5	TOTALE 5

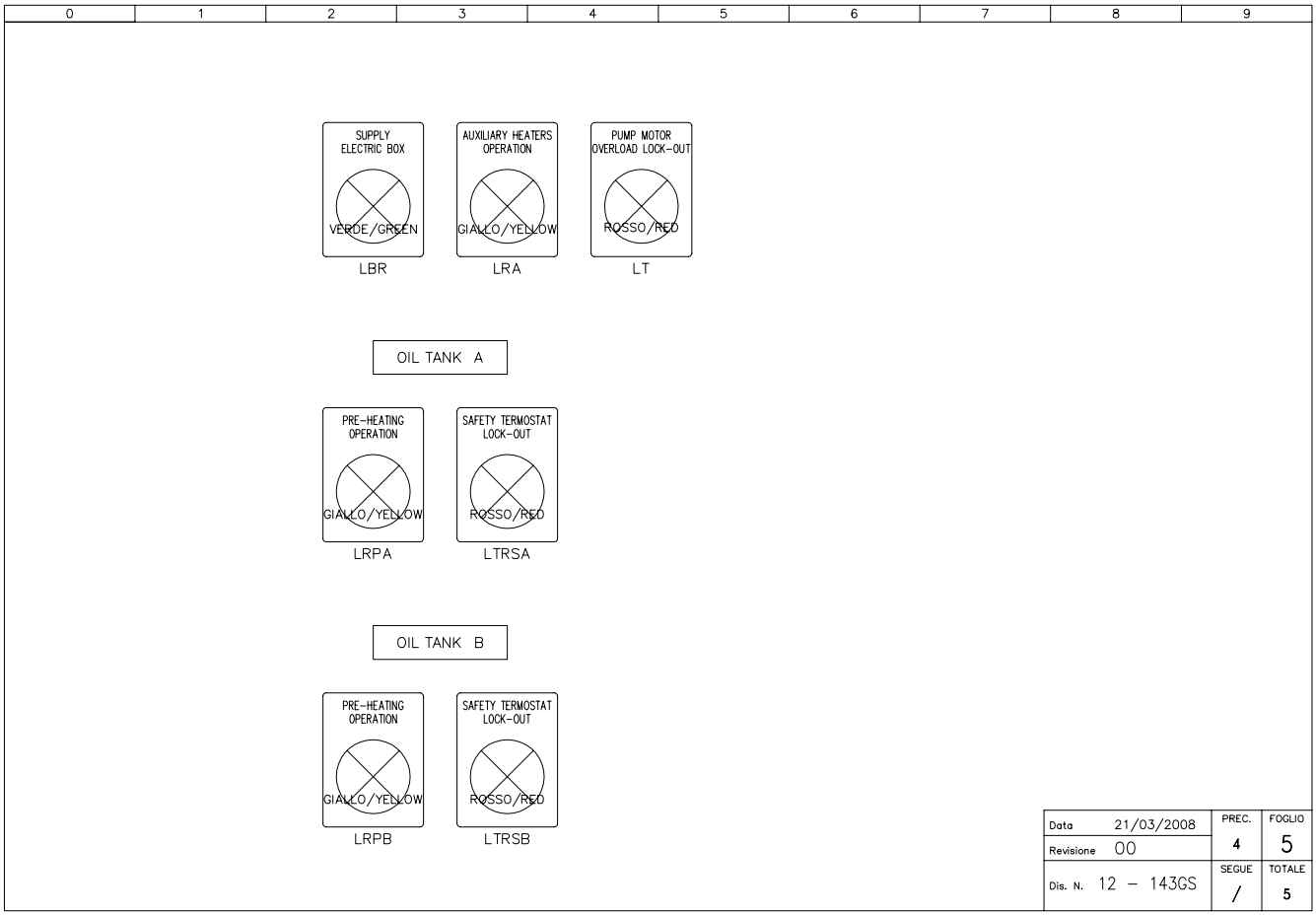
0
1
2
3
4
5
6
7
8
9
SUPPLY ELECTRIC BOX
VERDE/GREEN
LBR
AUXILIARY HEATERS OPERATION
GIALLO/YELLOW
LRA
PUMP MOTOR OVERLOAD LOCK-OUT
ROSSO/RED
LT
OIL TANK A
PRE-HEATING OPERATION
GIALLO/YELLOW
LRPA
SAFETY TERMOSTAT LOCK-OUT
ROSSO/RED
LTRSA
OIL TANK B
PRE-HEATING OPERATION
GIALLO/YELLOW
LRPB
SAFETY TERMOSTAT LOCK-OUT
ROSSO/RED
LTRSB
Data 21/03/2008
Revisione 00
PREC. 4
FOGLIO 5
Dis. N. 12 – 143GS
SEGUE /
TOTALE 5

SPARE PARTS

Desription	Code		
	KTP1030	**KTP1050**	**KTP1080**
SIEMENS LDU GAS PROVING SYSTEM	2020413	2020413	2020413
SIEMENS LFL CONTROL BOX	2020448	2020448	2020448
DETECTION ELECTRODE	2080258	2080258	2080258
OIL FILTER	2090018	2090018	2090018
GAS FILTER DN80	2090112	-	-
GAS FILTER DN100	2090113	2090113	2090113
GAS FILTER DN125	2090128	2090128	2090128
AIR PRESSURE SWITCH DUNGS GW50 A6GW50 A6	2160085	2160085	2160085
GAS PRESSURE SWITCH GW500 A5DUNGS GW500 A5	2160089	2160089	2160089
IGNITION TRANSFORMER	2170301	2170301	2170301
GAS VALVE GROUP SIEMENS VGD.. DN80	2190169	2190169	2190169
GAS VALVE GROUP SIEMENS VGD.. DN100	2190174	2190174	2190174
GAS VALVE ACTUATOR SKP15	2190181	2190181	2190181
GAS VALVE ACTUATOR SKP25	2190183	2190183	2190183
GAS VALVE GROUP SIEMENS VGD.. DN125	2190184	2190184	2190184
GAS VALVE GROUP DUNGS MBC3100SE DN80	21903M7	21903M7	21903M7
GAS VALVE GROUP DUNGS MBC5000SE DN100	21903M8	21903M8	21903M8
PILOT GAS ELECTROVALVE	2190502	2190502	2190502
OIL SOLENOID VALVE	2190403	2190750	2190750
OIL SOLENOID VALVE	2190750	2190750	2190750
GAS PROVING SYSTEM VPS504	2191604	2191604	2191604
GAS FLEXIBLE HOSES	234FX07	234FX07	234FX07
FLEXIBLE HOSES L=1500	2340004	2340004	2340004
FLEXIBLE HOSEL L=800	234FX07	234FX07	234FX07
FLEXIBLE HOSE L=347	234FX24	234FX24	234FX24
FLEXIBLE HOSE L=435	2340089	2340089	2340089
FLEXIBLE HOSE L=485	234FX31	234FX31	234FX31
SMALL ADJUSTING CAM FOIL	2440013	2440013	2440013
BIG ADJUSTING CAM FOIL	2440014	2440014	2440014
ACTUATOR	2480004	2480004	2480004
UV PROBE	2510001	2510001	2510001
BURNER MODULATOR	2570112	2570112	2570112
NOZZLE FLUIDICS	2610203	2610203	2610203
NOZZLE BERGONZO B	-	2610210	2610210
NOZZLE BERGONZO C	-	-	2610213
PRESSURE STABILISER WITH FILTER	2800085	2800085	2800085
COMBUSTION HEAD	3060277	3060292	3060292
BLAST TUBE	30910N9	30910Q9	30910Q8
IGNITION CABLE	6050143	6050143	6050143
OIL HEATER RESISTOR 24 kW	6060008 x 2	6060008 x 2	6060008 x 2
OIL HEATER RESISTOR	60600010	60600010	60600010

BURNERS EXPLODED VIEW

1	1	AIR INLET
2	1	BURNER BODY
2.1	1	REMOVABLE COVER
3	1	FIBRE GLASS PLAIT
4	1	PLATE
5	1	INLET
6	1	PERSPEX
7	1	PHOTOCELL
8	1	GLASS FRAME
9	4	FEMALE EYEBOLT
10	1	BLAST TUBE
11	1	AIR PRESSURE SWITCH
12	1	BLACK CONNECTOR
13.1	1	GAS FILTER
13.2	1	FLANGE
13.3	1	FLANGED REVERSIBLE CURVE
13.4	1	REVERSIBLE PIPE
13.5.1	1	MINIMUM GAS PRESSURE SWITCH
13.5.2	1	GAS VALVE GROUP
13.5.3	1	GAS VALVE ACTUATOR SKP15
13.5.4	1	GAS VALVE ACTUATOR SKP25
13.5.5	1	GAS LEAKAGE CONTROL UNIT
14.1	1	EXTENSION SCREW
14.2	1	PLAIN INLET
14.3	1	COUNTERNUT
14.4	1	MINIMUM GAS PRESSURE SWITCH
14.5	2	EG12 GAS ELECTROVALVE
14.6	1	BELLOW JOINT
14.7	1	SUPPORT FOR PILOT FLEXIBLE HOSES
14.8	1	GAS STABILISER
15.1	1	INLET NET
15.2	1	INLET NET
15.3	3	INTERNAL AIR DAMPER
15.4	1	AIR INLET
15.5	1	SHORT DAMPER SHAFT
15.6	1	SHORT DAMPER SHAFT
15.7	1	SHORT DAMPER SHAFT
15.8.1	1	COMPLETE ACTUATOR BRACKET
15.8.2	1	ADJUSTING CAM
15.8.3	1	ACTUATOR
16.1	1	FAN
16.2	1	FAN MOTOR
17.1	1	ELECTRIC BOARD
17.2	1	COVER BOARD
17.3.1	1	BURNER MODULATOR
17.4.1	1	CONTROL BOX
17.4.2	1	CONTROL BOX SOCKETB
17.4.3	1	TRANSFORMER
17.4.4	1	CONTACTOR
17.4.5	1	BIMETAL RELAY
18.1	1	OR-RING
18.2	1	PRESSURE OUTLET
18.3	1	THROTTLE SHAFT
18.4	1	BUTTERFLY VALVE
18.5	1	GAS MANIFOLD
18.6	1	COMBUSTION HEAD
18.6.1	1	IGNITION ELECTRODE
18.6.2	1	PILOT
18.7	1	IGNITION CABLE
18.8.1	1	RING NUT

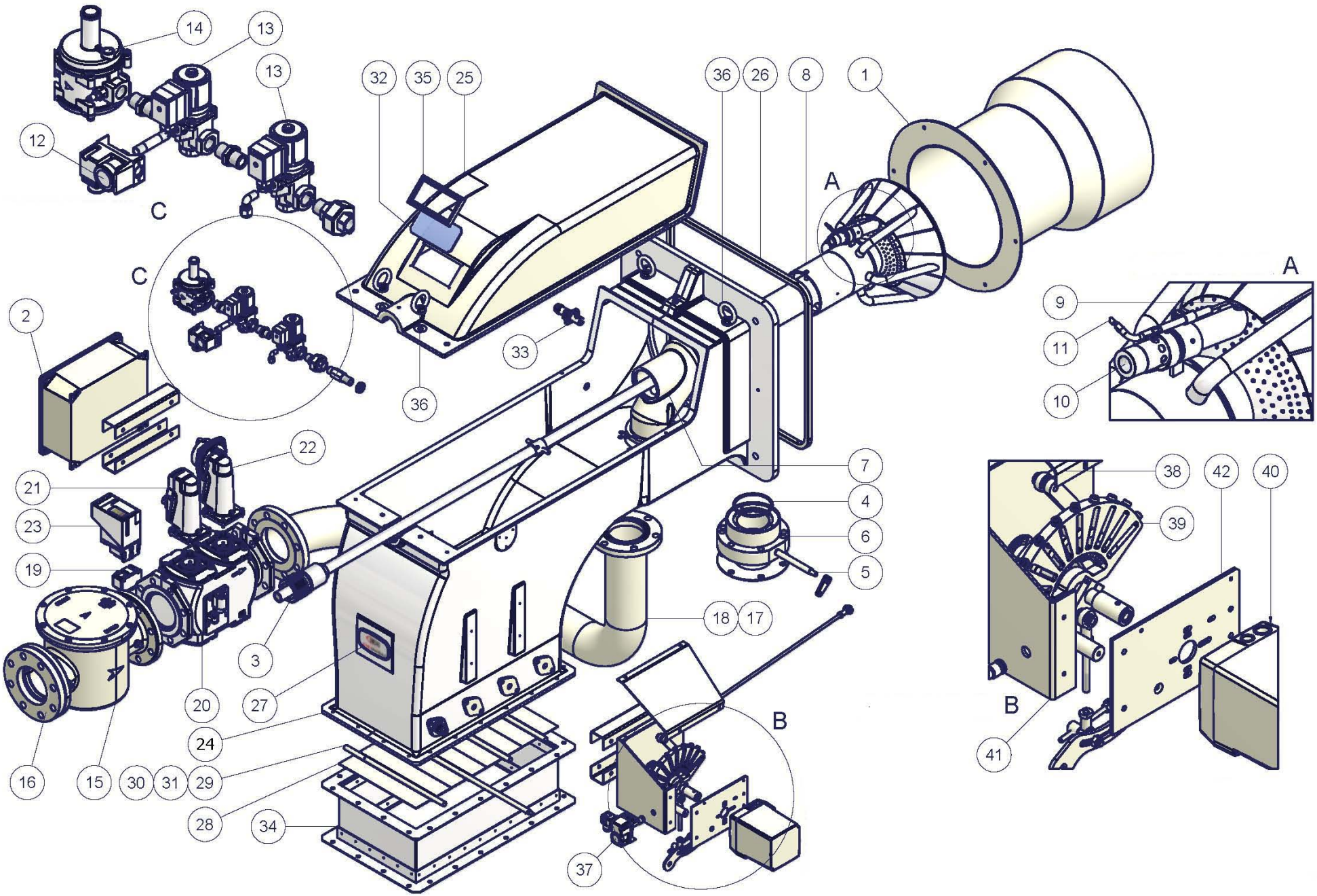
14
13
13
12
C
C
32
35
25
36
26
8
1
A
A
9
11
10
2
33
36
22
21
23
19
7
4
6
5
38
42
40
39
18
17
3
20
27
24
16
15
30
31
29
28
34
37
B
B
41

SIEMENS LFL 1.3.. CONTROL BOX

Automatic programme in the event of interruption and indication of position when interrupted

By default, in the event of any kind of interruption, the flow of fuel is immediately interrupted. At the same time the programmer stops and this indicates the position at the time of the interruption.

A symbol on the indicator disc shows each time the type of stoppage:

◄ No start-up (for example fault in the CLOSED signal for the limit contact "Z" at terminal 8 or some other contact between the terminals 12 and 4 or 4 and 5 is not closed).

◄ Start-up suspended because of a fault in the OPEN signal for the limit contact "A" at terminal 8.

P Block due to absence of air pressure signal. From this moment onwards any absence of air pressure will cause a block.

■ Block due to malfunction of the flame detector circuit.

▼ Start-up interrupted because there is a fault in the MINMUM signal for the auxiliary contact of the damper servo motor at terminal 8.

1 Block due to absence of flame signal at the end of the 1st safety period.

From this moment onwards any absence of a flame signal will cause a block.

2 Blockdue to absence of flame signal at the end of the 2nd safety period (flame signal of main burner).

▌ Blockdue to absence of flame signal or air pressure during operation.

Where a block stoppage occurs at any moment between switch on and pre-ignition without registering any symbol, the cause is normally an unscheduled flame signal.

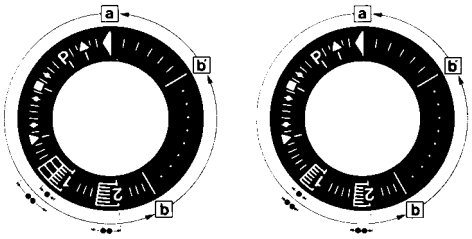

a-b Start-up programme

b-b' For time variants:move the programmer on to the automatic stop after the burner starts up (b' = position of the programmer during normal burner operation).

b(b')-aPost-ventilation programme after a regulation stop.At the start-up position "a" the programmer stops automatically.

. Safety time duration for mono-tube burners

.. Safety time duration for twin-tube burners

The apparatus can be reset immediately after a block. After resetting (and after the elimination of any problem causing the stoppage or after a power failure) the programmer returns to its start-up position. In this event only the terminals 7, 9, 10 and 11 are live in accordance with the monitoring programme. Only after this the device programs a new startup.

Operation

The wiring system and also the control system of the programmer "P" have already been given in this manual. The response signals required for the active parts and the flame monitor circuit are shown by a hatching.

In the absence of these response signals the mechanism interrupts the start-up programme; the exact time of the interruption can be identified from the visual indicator and will cause a block if the safety code requires it.

A consent to start-up by means of the thermostat or pressostat "R"

A-B start-up program

B-C normal burner operation

C regulation stop caused by "R"

C-D programmer returns to start-up position A.

During the regulation stop only terminals 11 and 12 are live and the damper, through the limit contact "Z" of its servo-motor is in the CLOSED position.The flame detector circuit F is activated (terminals 22 and 23 or 23/4) for the detector test and the paracitic light test.

Where the burners do not have dampers (or have an independent 00 damper control mechanism) there must be a bridge between terminals 6 and 8, otherwise the mechanism will not start up the burner.

For a burner to start up the following conditions must be met:

- Mechanism not blocked/reset.
- Damper closed.Limit contact switchZ must be in the CLOSED position and allow current to flow between terminals 11 and 8.
- Any contacts checking that the fuel valve (bv...) is closed, or other contacts with similar functions, must be closed between terminal 12 and the air pressostat LP.
- The contact for the air pressostat LP must be in the off position (LP test) so as to feed terminal 4.
- The gas pressostat contacts GP and the safety thermostat and pressostat contacts W must also be closed.

Start-up program

A Start-up

(R closes the start-up control ring between terminals 4 and 5)

The programmer starts up.At the same time the ventilator motor is fed through terminal 6 (only for pre-ventilation) and, after t7, the ventilator motor or the combustion gas exhaust fan is fed through terminal 7 (pre-ventilation and post-ventilation).

At the end of t16, the command opening the damper passes through terminal 9; during the damper opening time the programmer does not move since terminal 8, through which the programmer is fed, is dead.

Only once the damper is fully open and the limit contact switch A has switched on, feeding terminal 8, does the programme proceed.

t1 Pre-ventilation time with damper fully open (nominal air flow).

Shortly after the beginning of the pre-ventilation time, the air pressostat should switch off the current between terminals 4 and 13;otherwisethe apparatus would block (air pressure monitor).

At the same time the terminal 14 should be live since current feeding the ignition transformer and the fuel valves passes through this circuit.

During pre-ventilation time the flame detector circuit is checked and in the event of an operational defect the monitor brings about a block.

At the end of the pre-ventilation time the monitor automatically moves the damper servo-motor, through terminal 10, to the flame ignition position which is governed by the auxiliary contact "M".

During this period the programmer stops until terminal 8, is again activatedthrough contact "M".

After a few seconds the little programmer motor is directly fed by the active part of the apparatus.

After this point terminal 8 plays no further part in the burner ignition process.

Mono-tube burner

t3 Pre-ignition time waiting the response from the fuel valve at terminal 18.

t2 Safety time (start up flame strenght); at the end of the safety time a flame signal should appear at terminal 22 of the amplifier and it should stay on until a regulation stop; if this does not happen the mechanism will block.

t4 Interval; at the end of t4, terminal 19 is live.

t5 Interval At the end of t5 terminal 20 is live.At the same time the monitor outlets from 9 and 11 and terminal 8 into the active part of the apparatus are kept galvanically separatedso as to protect the monitor itself from recovery voltage through the capacity regulator circuit.

Twin-tube burners (**)

t3 Preignition time until the all clear to the pilot burner valve at terminal 17.

t2 First safety time (pilot flame strenght); at the end of the safety time a flame signal should appear at terminal 22 of the amplifier and it should stay on, until a regulation stop; if it does not, the apparatus will block.

t4 Interval until the consent to the fuel valve at terminal 19, for the first flame of the main burner.

t9 2nd safety time; at the end of the second safety time the main burner should be lit by means of the pilot. At the end of this period, terminal 17 is dead and therefore the pilot burner will be out.

t5 Interval; at the end of t5 terminal 20 is live. At the same time the monitor outlets from 9 to 11 and the terminal 8at the input of the active part of the apparatus are galvanically separated so as to protect the apparatus itself from recovery voltage through the strenght regulator circuit.

When the strenght regulator LR at terminal 20 gives the consent, the start-up programme for the apparatus comes to an end. Depending on time variants, the programmer stops either immediately or at the end of a set time, without effecting the position of the contacts.

B Operational position of the burner

B-C Burner operation (production of heat)

While the burner is working the strnght regulator controls the damper, according to the demand for heat, by means of the positioning at nominal load of the auxiliary contact "V" of the damper servocontrol.

C Regulation stop for operation of "R"

When there is a regulation stop the fuel valves immediately close. At the same time the programmer starts to programme:

t6 Post-ventilation time (post-ventilation with the ventilator "G" at terminal 7).Shortly after beginning of the post-ventilation time terminal 10 becomes live and moves the damper to the "MIN" position. The full closure of the damper only happens towards the end of the post-ventilation time and is prompted by an automatic signal from terminal 11

t13 Admissible post-ignition time

During this time the flame monitor circuit may still receive a flame signal without the apparatus blocking.

D-A End of automatic programme

At the end of t6, at the point where the programmer and the automatic contacts have reverted to the starter position, the detection probe test restarts.

During an operational stop even an unscheduled flame signal lasting a few seconds can cause a block because during this period an NTC in the circuit acts as retarder.This means that brief unscheduled influences cannot cause a block.

(**) Times t3, t2 and t4 only apply only to safety devices in the series 01.

Specifications

Mains voltage	220V -15%...240V +10%
Frequency	50Hz -6%...60Hz +6%
Absorbed capacity	3.5 VA
Built-in fuse	T6.3/250E slow action DIN41571 No. 451915070
External fuse	max. 16A
Interference	N-VDE0875
Flow permitted at terminal 1	5A (DIN 0660 AC3)
Flow permitted at control terminals	4A (DIN 0660 AC3)
Flow at monitor contacts:	
input at terminals 4 & 5	1A, 250V
input at terminals 4 & 11	1A, 250V
input at terminals 4 & 14	function of the load at terminals 16 and 19, min.1A, 250V
Emplacement	Any
Protection	IP40
Permitted ambient temp	-20...+60° C
Min.temperature (trans/storage)	-50° C
Weight:	
apparatus	approx. 1,000g.
base	approx. 165g.

Ionisation monitor

voltage in detector electrode	
normal working	330V ±10%
test	380V ±10%
short circuit current	max. 0,5 mA
Ionisation current, min.request	6 µA
max. permitted length for connecting cables	
normal cable (laid separately**)	80m
armoured cable(high frequency)	protection at terminal 22 140m

UV monitor

Voltage in UV detector	
normal working	330V ±10%
test	380V ±10%
Detector current, min. request*	70µA
Max. detector current	
normal working	630 µA
test	1300 µA
Max.length of connecting cable	
normal cable (laid separately**)	100m
armoured cable (high frequency)	protected at terminal 22 200m
Weight	
QRA2	60 g
QRA10	450 g.

*Connect up in parallel to the measuring device a condenser 100µF, 10...25V.

** The wire connecting up the detector electrode should not be in the same sleeve as the other conductor wires.

Ignition spark monitor with QRE1 series 02 detector

Minimum detector current	30µA

Operating times

t7 initial delay for ventilator G2	2	
t16 initial delay of air damper OPEN consent		4
t11 opening time for damper	any	
t10 initial delay for air pressure monitor	8	
t1 pre-ventilation time with damper open	36	
t12 travel time for air damper to MIN position	any	
t3 t3' pre-ignition time	t3	4
	t3	'-
t2 t2' safety time (1st safety time for burners with intermittent pilot lighter	t2	2
	t2	'-
t4 t4' interval between start of t2 and response to valve at terminal 19	t4	10
	t4	'-
t9 2nd safety time for burners with intermittent pilot lighter	2	
t5 interval between end of t4 and response at terminal 20	10	
t20 interval before programmer cuts out after start-up- duration of start-up		60
t6 post-ventilation time (G2 only)		12
t13 permitted post-ignition time		12
t16 initial delay from opening consent of the air damper		

t20 interval until the automatic shut-off of the programming mechanism after the burner start

Key

A	limit contact switch for damper OPEN position
AI	block remote signal
AR	main relay (working network) with contacts "ar"
AS	Monitor fuse
BR	block relay with "br" contacts
BV	fuel valve
EK	reset button
FE	detector electrode of ionisation circuit
FR	flame relay with "fr" contacts
G	ventilator motor or burner motor
GP	gas pressure switch
H	main interruptor switch
L	block stoppage LED
LK	air damper
LP	air pressostat
LR	safety regulator
M	auxiliary contact switch for damper "MIN" position
QRA	UV detector
QRE	ignition spark detector
R	thermostat or pressostat
S	fuse
SA	damper servo-motor
SM	synchronous programmer motor
V	flame signal amplifier
V	in case of servo-motor: auxiliary contact for response to fuel valve with regard of damper position
W	safety pressostat or thermostat
Z	ignition transformer
Z	in case of servomotor: end of limit contact switch for damper CLOSED position
ZBV	pilot burner fuel valve
°	for mono-tube burners
°°	for twin-tube burners

(1)	input for raising QRA detector voltage to test level
(2)	input for excitation of flame relay during flame detector test circuit (contact XIV) and during safety time (contact IV)
(3)	Do not press EK for more than 10 seconds

Programmer diagram

t1	pre-ventilation time
t2	safety time
*t2	'1st safety time
t3	pre-ignition time
*t3	'pre-ignition time
t4	interval for creating current between terminals 18 and 19
*t4	'interval for creating current between terminals 17 and 19
t5	interval for creating current between terminals 19 and 20
t6	post-ventilation time
t7	interval between startup consent and current created at terminal 7
t8	duration of start-up
*t9	2nd safety time
t10	interval before air pressure monitoring begins
t11	damper opening travel time
t12	damper closure travel time
t13	permissible post-combustion time
t16	initial delay of damper OPEN response
t20	interval before programmer automatically stops

* These times are valid with the use of a series 01 safety device for monitoring burners with intermittent pilot lighter.

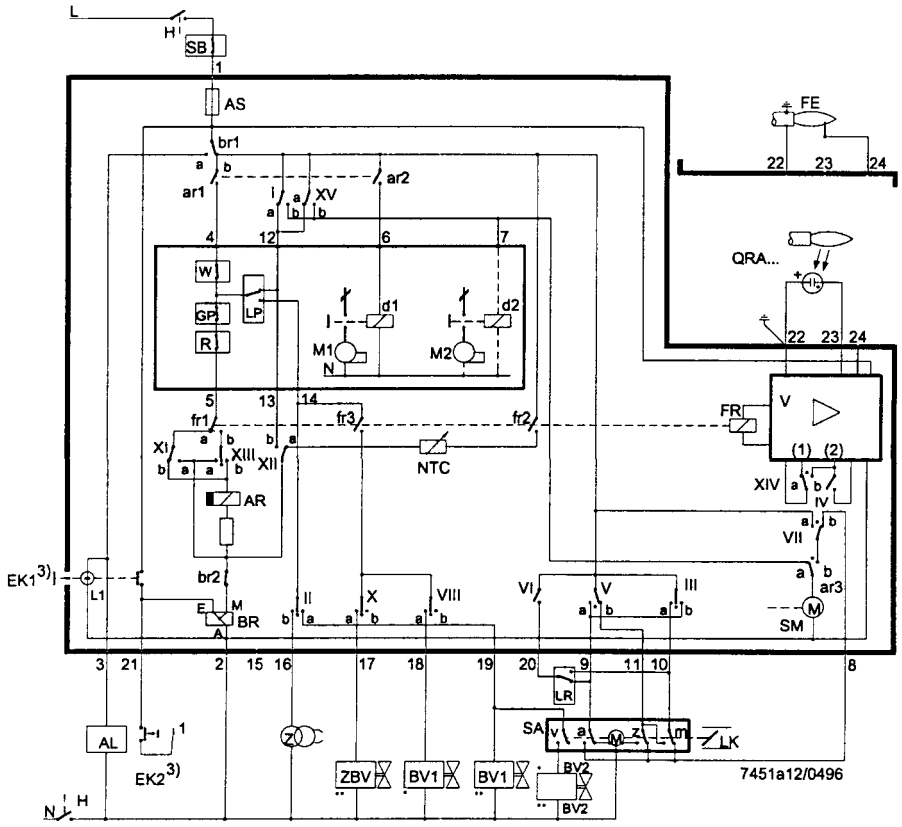
L
H
SB
1
AS
br1
ar1
ar2
XV
FE
22
23
24
QRA...
W
GP
R
LP
d1
d2
M1
M2
N
5
13
14
fr1
fr3
fr2
FR
V
(1) (2)
XI
XIII
XII
NTC
AR
XIV
IV
VII
EK1 3)
L1
br2
E
M
BR
A
II
X
VIII
VI
V
III
ar3
SM
3
21
2
15
16
17
18
19
20
9
11
10
8
LR
AL
EK2 3)
SA
LK
ZBV
BV1
BV2
N
H
7451a12/0496

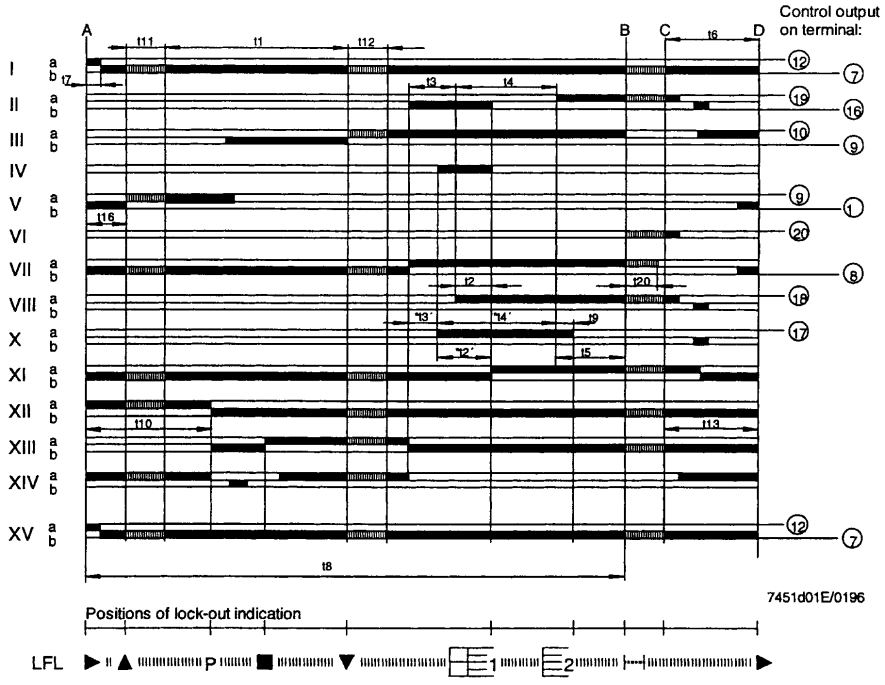
Control output on terminal:
A
B
C
D
t11
t1
t12
t6
t7
t3
t4
t16
t2
t20
t13'
t14'
t9
t12'
t5
t10
t13
t8
I
II
III
IV
V
VI
VII
VIII
X
XI
XII
XIII
XIV
XV
7451d01E/0196
Positions of lock-out indication
LFL
P
1
2

C.I.B. UNIGAS S.p.A.
Via L.Galvani, 9 - 35011 Campodarsego (PD) - ITALY
Tel. +39 049 9200944 - Fax +39 049 9200945/9201269
web site: www.cibunigas.it - e-mail: cibunigas@cibunigas.it

Note: specifications and data subject to change without notice. Errors and omissions excepted.

USER MANUAL OF MULTI-THERMOSTAT

MCX06C

MCX06C is a multi-thermostat with four 100k NTC inputs. It can control up to 4 temperatures showing them (not more than 2 at the same time) on a couple of displays.
It is used to check and adjust oil heater temperatures.

User interface:
Device:

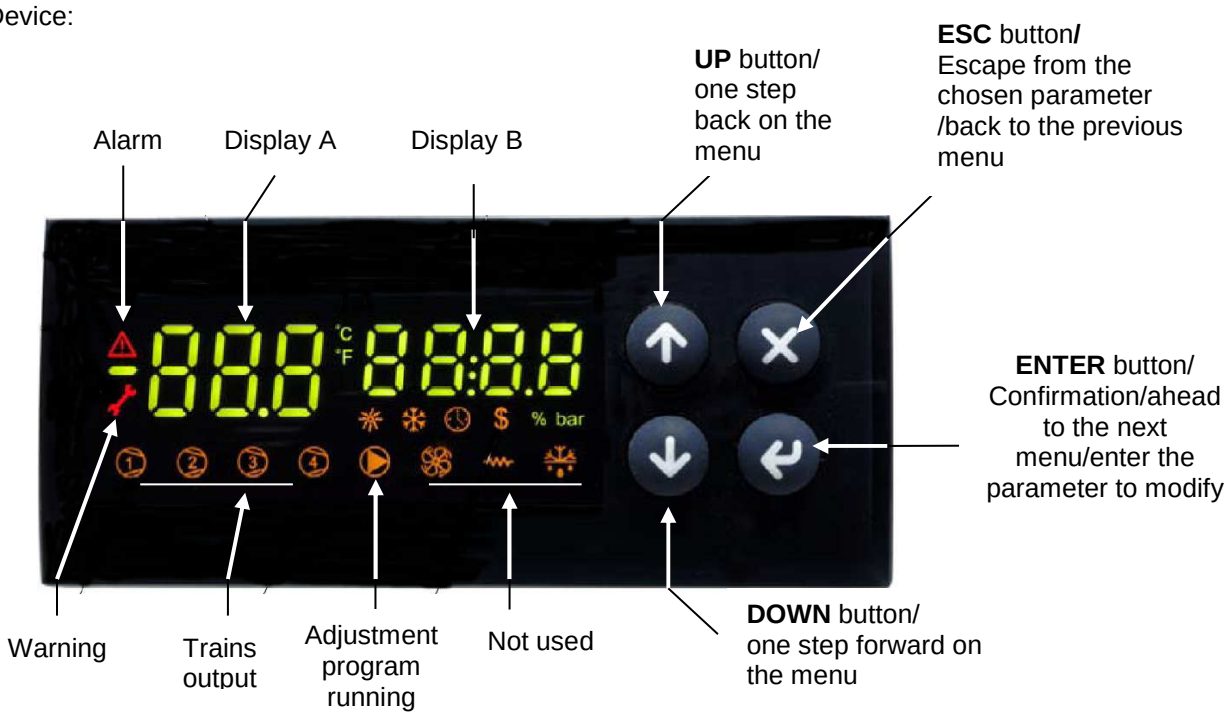

Note :
In normal operation, the display A shows the oil tank resistor temperature (probe Pb1).
In normal operation, the display B shows the oil output temperature (probe Pb3).

Connections from terminal side:

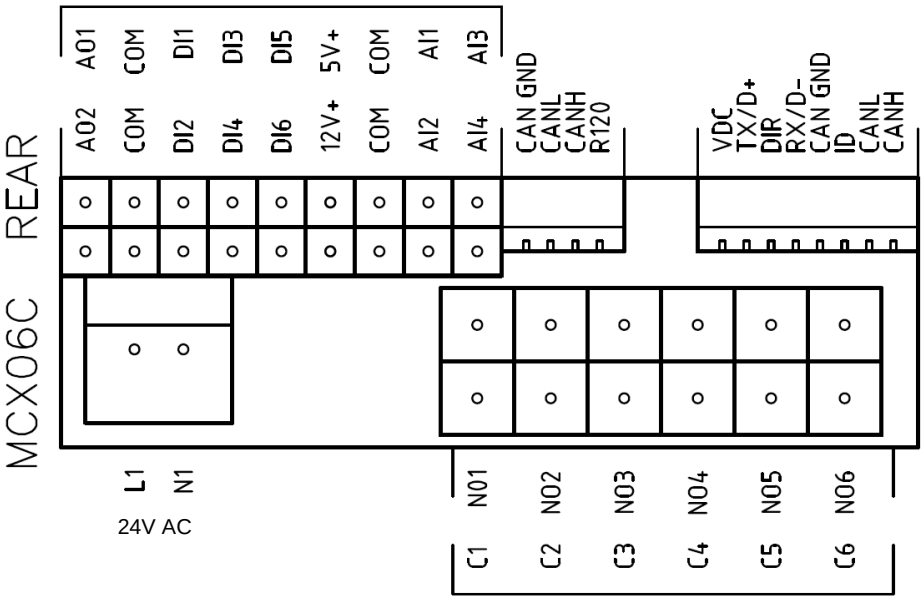

Probe connection:
input **AI1** = probe **Pb1** = set-point "**tr**" = oil heater temperature probe;
input **AI2** = probe **Pb2** = set-point "**tCI**" = plant consent temperature probe (when installed);
input **AI3** = probe **Pb3** = set-point "**OIL**" = oil heater output temperature probe (PID regulation);
input **AI4** = probe **Pb4** = set-point "**tcn**" = oil heater consent temperature probe.

Menu:
To enter the menu below, keep pushing **ENTER** for more than 3 s.

Menu code	Sub-menu code	Function	Notes
Prb		Probes values	You can see in sequence the 4 probe values (UP and DOWN keys): the probe code is on display A (Pb1,..., Pb4) and the probe value is on display B (not fitted or out of work probes show "----").
Log		Login	It defines the access level to menu and parameters (password)
	PAS	Password	Password input
Par		Parameters menu	Access to parameters (you have to login first)
	CnF	Configuration menu	Parameter configuration
	rEG	Regulation menu	Set to set-point, probe, thresholds etc.
ALA		Alarm menu	Access to alarm management
	Act	Active alarms	Show the active alarms
	rES	Reset alarms & Warning	Reset of the manual reset alarms and warning
Loc		Lock/Unlock functions	Not used
InF	rEL	Software version	Installed software version
tUN		Autotuning	Activation On, deactivation ESC PID parameter autotuning

Alarms & Warning:
When the red triangle on the top left lights, one or more alarms are activated.
When the red key on the left lights, the output N05-C5 is active and the relay **KTRS** switches the resistors OFF.
Check the reason, correct the failure and, as soon as the temperature is lower than **trS**, reset it through **ALA/rES .**
In order to show active alarms and warnings, select the relevant menu through **ALA/Act**.and, using the **UP** and **DOWN** buttons, scroll the lines.
In order to perform the manual reset, select **ALA/rES**.

Code	Description	Sourse	Active simbol	Reset type
trS	High temperature resistors alarm	probe Pb4 > value trS	red key	Manual
EP1	Probe Pb1 fault	Probe Pb1 fault	red triangle	Automatic
EP2	Probe Pb2 fault	Probe Pb2 fault	red triangle	Automatic
EP3	Probe Pb3 fault	Probe Pb3 fault	red triangle	Automatic
EP4	Probe Pb4 fault	Probe Pb4 fault	red triangle	Automatic

Set point adjustment:
All the parameters inside the **Par** menu are locked by a password.
The user can modify only set points (menu **rEG**), without using any passwords.
The oil viscosity at the nozzle, should be about 1,5°E, which guarantees correct and safe functioning of the burner.
The temperature values in the table, guarantee the respect of that parameter and are valid when the pre heating tank is installed on the burner. For different configurations , please refer to the chapter "Recommendations to design heavy oil feeding plants" in the burner manual.
Here below recommended set points:

Menu path				Oil viscosity at 50 °C according to the letter show n in the burner model				
				P	**N**	**E**	**D**	**H**
				89 cSt	< 50 cSt	> 50 cSt < 110 cSt	> 110 cSt < 400 cSt	> 400 cSt < 4000 cSt
				12 °E	< 7°E	> 7 °E < 15 °E	> 15 °E < 50 °E	> 50 °E < 530 °E
Par								
rEG	Pb1	tr	Oil heater temperature probe	parameter not visible				
	Pb2	tCI	Plant consent temperature probe (when installed)	20 °C	70 °C	70 °C	70 °C	---
	Pb3	Oil	oil heater output temperature probe (PID regulation);	60-70 °C	110-120 °C	120-130 °C	130-140 °C	140-150 ° C
		SP0	Set-point oil heater with oil pump stopped (stand-by)	45 °C	120 °C	130 °C	140 °C	150 °C
	Pb4	tcn	Oil heater consent temperature probe	40 °C	100 °C	100 °C	110 °C	120 °C
		trS	Safety temperature tank resistors (manual reset)	120 °C	190-200 °C	190-200 °C	190-200 °C	190-200 °C

The above temperature values are suggested and refer to a plant designed according to the prescriptions in the burner user manual. The suggested values can change in reference to the fuel oil specifications.

RWF55.5X & RWF55.6X

User manual

M12926CA Rel.0.2 11/2023

DEVICE INSTALLATION

Fixing system

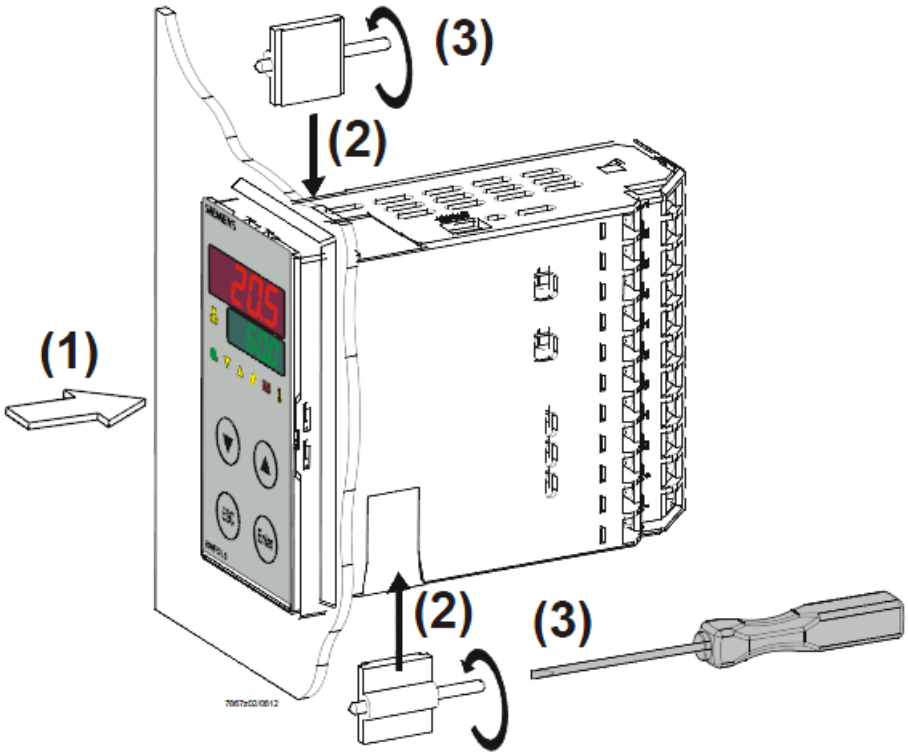

Drilling dimensions:

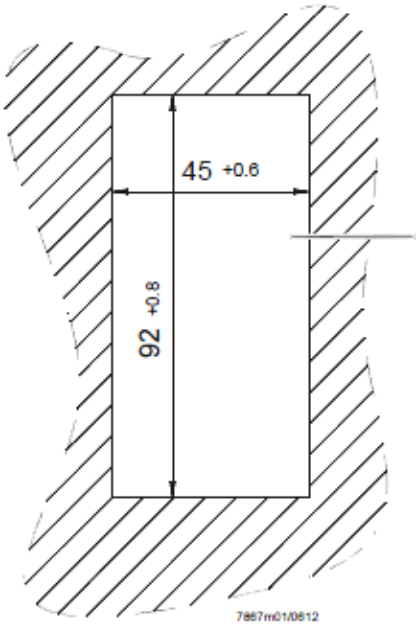

FRONT PANEL

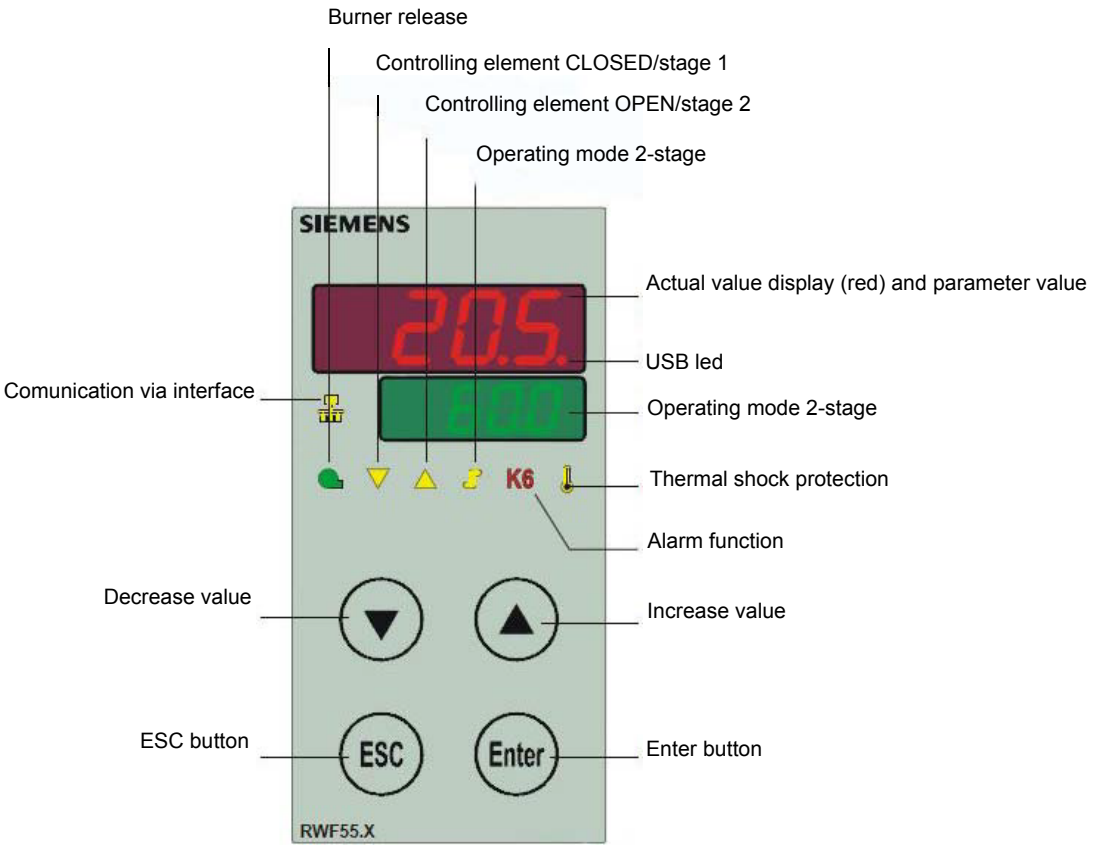
Burner release
Controlling element CLOSED/stage 1
Controlling element OPEN/stage 2
Operating mode 2-stage
SIEMENS
Actual value display (red) and parameter value
USB led
Comunication via interface
Operating mode 2-stage
K6
Thermal shock protection
Alarm function
Decrease value
Increase value
ESC button
ESC
Enter
Enter button
RWF55.X

NAVIGATION MENU

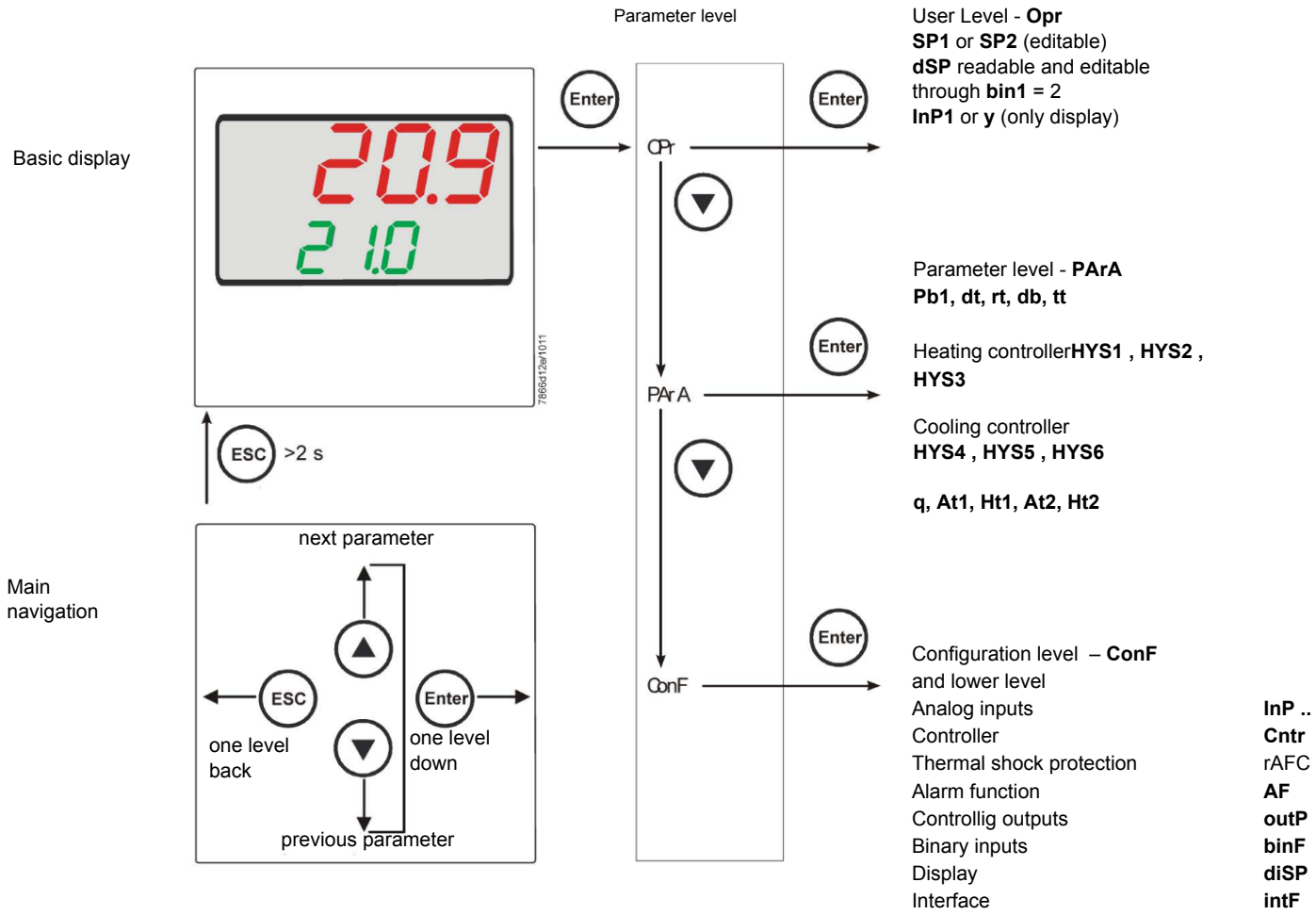

RWF55 is preset good for 90% of applications. However, you can set or edit parameters as follow:

Set-point: set or modification:

When the burner is in stand-by, (safety loop open, that is terminals 3-4/T1-T2 on the 7 pole plug open) push the Enter button: on the lower display (green) Opr appears; push Enter again and in the same display SP1 appears. Push Enter again and the lower display (green SP1) flashes. Using the up and down arrows change the set-point on the upper display (red).Push Enter to confirm and push ESC more times to get the home position.

PID parameters set and modifications (PArA):

Push **Enter** button, on the green display **Opr** appears; using the **down arrow,** scroll until group **PArA** is reached and push **Enter**.
On the green display **Pb1** e appears and on the red one the set parameter. Push is sequence the **down or up** arrow the menu is scrolled.
Push **Enter** to select and the **arrows** to choose the desired value. **Enter** to confirm

Parameter	Display	Range	Factory setting	Remarks
Proportional band	Pb1	1… 9999 digit	10	Typical value for temperature
erivative action	dt	0… 9999 sec.	80	Typical value for temperature
Integral action	rt	0… 9999 sec.	350	Typical value for temperatureT
Dead band (*)	db	0… 999,9 digit	1	Typical value
Servocontrol running time	tt	10… 3000 sec.	15	Set servocontrol running time
Switch-on differential (*)	HYS1	0,0… -1999 digit	-5	Value under setpoint below which the burner switches back on (1N-1P closes)
Switch-off differential 2° stage (*)	HYS2	0,0 … HYS3	3	(enable only with parameter bin1 = 4)
Upper switch-off differential (*)	HYS3	0,0… 9999 digit	5	Value over setpoint above which the burner switches off (1N-1P opens)
Switch-on differential on cooling controller (*)	HYS4	0,0… 9999 digit	5	Do not used (enable only with parameter **CACt** = 0)
Switch-off differential 2° stage on cooling controller (*)	HYS5	HYS6…0,0 digit	5	Do not used (enable only with parameter **CACt** = 0 and parameter **bin1**=0)
Upper switch-off differential on cooling controller (*)	HYS6	0,0… -1999 digit	5	Do not used (enable only with parameter CACt = 0)
Delay modulation	q	0,0… 999,9 digit	0	Do not alter
T Outside temperature Curve point 1 (*)	At1	-40 ...120 digit	-10	First point of external temperature for climatic curve
Boiler temperature Curve point 1 (*)	Ht1	SPL...SPH	60	Set-point temperature for the external temperature 1
TT Outside temperature Curve point 2 (*)	At2	-40 ...120 digit	20	Second point of external temperature for climatic curve
Boiler temperature Curve point 2 (*)	Ht2	SPL...SPH	50	Set-point temperature for the external temperature 2

(*) Parameters affected by setting of decimal place (**ConF > dISP** parameter **dECP**)

Setting the kind of sensor to be connected to the device:

Push the **Enter** button: on the lower display (green) **Opr** appears. Using the **up and down arrows** find **ConF.** Push **Enter** to confirm. Now on the green display the group **InP** appears. Push **Enter** and **InP1** is displaied. Enter to confirm.You are inside **InP1**; the green display shows **Sen1 (sensor type)**, while the red display shows the chosen sensor code Push **Enter** to enter the **Sen1** parameter, then choose the desired sensor using the **arrows.** Push **Enter** to confirm and **ESC** to escape.

Once selected the sensor, you can modify all the other parameters using **up and down arrows** according to the tables here below :

ConF > InP >InP1

Parameter	Value	Description
SEn1 type of sensor for analog input 1	1	Pt100 3 wire
	2	Pt100 2 wire
	3	Pt1000 3 wire
	4	Pt1000 2 wire
	5	Ni1000 3 wire
	6	Ni1000 2 wire
	7	0 ÷ 135 ohm
	8	Cu-CuNi T
	9	Fe-CuNi J
	10	NiCr-Ni K
	11	NiCrSi-NiSi N
	12	Pt10Rh-Pt S
	13	Pt13Rh-Pt R
	14	Pt30Rh-Pt6Rh B
	15	0 ÷ 20mA
	16	4 ÷ 20mA
	17	0 ÷ 10V
	18	0 ÷ 5V
	19	1 ÷ 5V
OFF1 Sensor offset	-1999..**0**.. +9999	Correction value measured by the sensor
SCL1 scale low level	-1999..**0**.. +9999	minimum scale value(for input ohm, mA, V)
SCH1 scale high level	-1999..**100**.. +9999	maximum scale value(for input ohm, mA, V)
dF1 digital filter	0…**0,6**…100	Is used to adapt the digital 2nd order input filter (time in s; 0 s = filter off)
Unit temperature unit	**1** 2	1 = **degrees** Celsius 2 = degrees Fahrenheit

(**bold** = factory settings)

ConF > InP >InP2

Input 2 : this input can be used to specify an external setpoint or carry out setpoint shifting

Parameter	Value	Description
FnC2	0 1 2 3	0= **no function** 1= external setpoint (display **SPE**) 2 =setpoint shifting (display **dSP**) 3 = angular positioning feedback
SEn2 tisensor type input 2	1	0 ÷ 20mA
	2	4 ÷ 20mA
	3	0 ÷ 10V
	4	0 ÷ 5V
	5	1 ÷ 5V
	1	0 ÷ 20mA
OFF2 Sensor offset	-1999..**0**.. +9999	Correction value measured by the sensor
SCL2 scale low level	-1999..**0**.. +9999	minimum scale value(for input ohm, mA, V)
SCH2 scale high level	-1999..**100**.. +9999	maximum scale value(for input ohm, mA, V)
dF2 digital filter	0…**2**…100	Is used to adapt the digital 2nd order input filter (time in s; 0 s = filter off)

(**bold** = factory settings)

ConF > InP >InP3

Input 3: this input is used to acquire the outside temperature

Parameter	Value	Description
SEn3 sensor type input 3sensor type input 2	0	0 =
	1	1 = wire
	2	2 = wire
OFF3 Sensor offset	-1999..**0**.. +9999	Correction value measured by the sensor
dF3 digital filter	0…**1278**…1500	Is used to adapt the digital 2nd order input filter (time in s; 0 s = filter off)

(**bold** = factory settings)

ConF > Cntr

Here, the type of controller, operating action, setpoint limits and presettings for self-optimization are selected

Parameter	Value	Description
CtYP controller type	1 2	**1 = 3-position controller (open-stop-close)** 2 = continuative action controller (0 ÷10V or 4 ÷ 20mA)
CACt control action	**1** 0	1 = **heating controller** 0 = cooling controller
SPL least value of the set-point range	-1999..**0**..+9999	minimum set-point scale
SPH maximum value of the set-point range	-1999..**100**..+999	maximum set-point scale
Self-optimization	0 1	0 = **Free** 1 = Locked Self-optimization can only be disabled or enabled via the ACS411 setup program. Self-optimization is also disabled when the parameter level is locked
oLLo set-point limitation start, operation limit low	**-1999**.... +9999	lower working range limit
oLHi set-point limitation end, operation limit high	-1999.... **+9999**	upper working range limit

(**bold** = factory settings)

ConF > rAFC

Activation boiler shock termic protetion:

RWF55.. can activate the thermal shock protection only on sites where the set-point is lower than 250°C and according to **rAL** parameter

Parameter	Value	Description
FnCT type of contol	**0** 1 2	tchoose type of range degrees/time **0 = deactived** 1 = Kelvin degrees/minute 2 = Kelvin degrees/hour
rASL ramp rate	**0,0 …** 999,9	Slope of thermal shock protection (only with functions 1 and 2) .
toLP tolerance band ramp	**2 x (HYS1) = 10**…9999	width of tolerance band (in K) about the set-point **0 = tolerance band inactive** 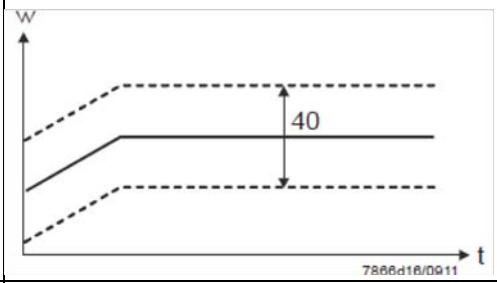
rAL ramp limit	**0**…250	Ramp limit. When this value is lower than the temperature set-point, the RWF controls the output increasing the temp set point step by step according to **rASL**. If this is over the temp set point, the control is performed in cooling

(**bold** = factory settings)

Alarm functionAF

The alarm function can be used to monitor the analog inputs. If the limit value is exceeded, multifunctional relay K6 (terminals **6N** and **6P**) is activated (depending on the switching characteristic)

The alarm function can have different switching functions (Ik1 to Ik8) and can be set to a deviation from the active setpoint or to a fixed limit value

Limit value **AL** relative to setpoint (x)

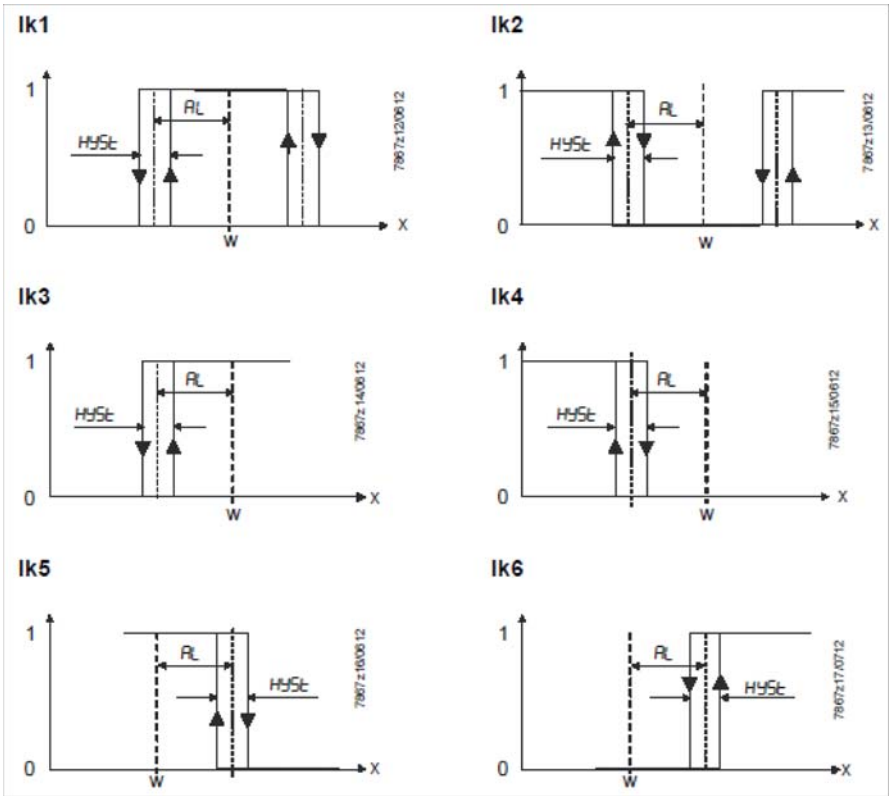

Fixed limit value **AL**

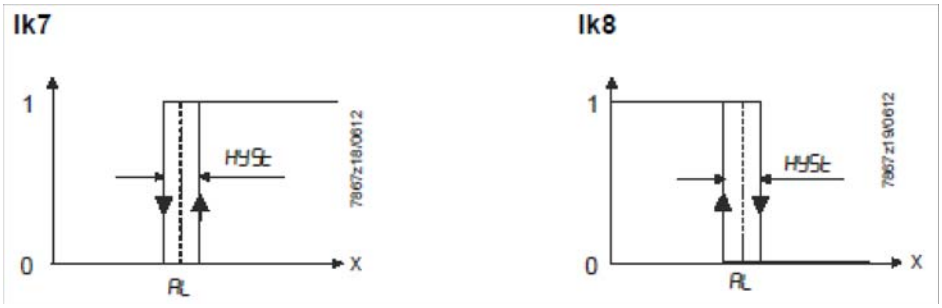

ConF > AF

Parameter	Value	Description
FnCt type of control	0 1 2 3 4 5 6 7 8 9 10 11 12	0 = **Without function** Ik1 = monitored input **InP1** Ik2 = monitored input **InP1** Ik3 = monitored input **InP1** Ik4 = monitored input **InP1** Ik5 = monitored input **InP1** Ik6 = monitored input **InP1** Ik7 = monitored input **InP1** Ik8 = monitored input **InP1** Ik7 = monitored input **InP2** Ik8 = monitored input **InP2** Ik7 = monitored input **InP3** Ik8 = monitored input **InP3**
Alarm value AL	-1999 ... **0** 1999	Limit value or deviation from setpoint to be monitored (see alarm functions **Ik1** to **Ik8**: limit value **AL**) Limit value range for **Ik1** and **Ik2**0 ...9999
HySt switching differential	0… **1**... 9999	Switching differential for limit value **AL**
ACrA response by out of range	**0** 1	**Switched-off** ON Switching state in the case of measuring range overshoot or undershoot (Out of Range)

(**bold** = factory settings)

ConF > OutP

For fuel-air ratio control purposes, the RWF55 has the binary outputs K2, K3 (terminals KQ,K2, K3) and the analog output (terminals A+, A-). The burner is released via relay K1 (terminals 1N, 1P) .

The binary outputs of the RWF55 offer no setting choices

The RWF55 has an analog output.

The analog output offers the following setting choices:

Parameter	Value	Description
FnCt type of control	1 2 3 **4**	1 = analog input 1 doubling with possibility to convert 2 = analog input 2 doubling with possibility to convert 3 = analog input 3 doubling with possibility to convert **4 = Controller's angular positioning is delivered (modulating controller)**
SiGn type of output signal	 **0** 1 2	physical output signal (terminals A+, A-) **0 = 0÷20mA** 1 = 4÷20mA 2 = 0÷10V DC
rOut value when out of input range	**0**…101	signal (in percent) when measurement range is crossed
oPnt zero point	-1999…**0**..+9999	A value range of the output variable is assigned to a physical output signal (for **FnCt** = 1, 2, 3)
End end point	-1999…**100**..+9999	A value range of the output variable is assigned to a physical output signal (for **FnCt** = 1, 2, 3)

(**bold** = factory settings)

ConF > binF

This setting decides on the use of the binary inputs**D1**, **D2**, **DG**

b

Parameter	Value	Description
bin1 binary imput 1 (terminals **DG – D1**)	**0** 1 2 3	**0 = without function** 1 = set-point changeover (SP1 / SP2) 2 = Iset-point shift (Opr > dSP parameter = value of set-point modify) 3 = input alarm
bin2 binary imput 2 (terminalsк **DG – D2**)	**4**	**changeover of operating mode** DG-D2 open = modulating operation DG-D2 close = 2 stage operation

(**bold** = factory settings)

ConF > dISP

.Both displays can be customized to suit your needs by configuring the displayed value, decimal, time out and blocking

Parameter	Value	Description
diSU pper display (red)	0 **1** 2 3 4 6 7	Display value for upper display: 0 = display power-off **1 = analog input 1 (InP1) value** 2 = analog input 2 (InP2) value 3 = analog input 3 (InP3) value 4 = controller's angular positioning 6 = set-point valueв 7 = end value with thermal shock protection
diSL lower display (green)	0 1 2 3 4 **6** 7	Display value for lower display3: 0 = display power-off 1 = analog input 2 (InP2) value 2 = analog input 2 (InP2) value 3 = analog input 2 (InP2) value 4 = controller's angular positioning **6 =** set-point valueв 7 = end value with thermal shock protection
tout timeout	0..**180**..250	time (s) on completion of which the controller returns automatically to the basic display, if no button is pressed
dECP decimal point	**0** 1 2	**0 = no decimal place** 1 = one decimal place 2 = two decimal place
CodE level lockout	**0** 1 2 3	**0 = no lockout** 1 = configuration level lockout (**ConF**) 2 = parameter and configuration level lockout (**PArA** & **ConF**) 3 = keyboard lockout

(**bold** = factory settings)

ConF > IntF

The controller can be integrated into a data network using an optional RS-485 (terminals R+ and R-) interface or an optional Profibus DP interface(only model**RWF55.6x** terminalsC1-C2-C3-C4)

Parameter	Value	Description
bdrt baudrate	**0** 1 2 3	**0 = 4800 baud** 1 = 9600 baud 2 = 19200 baud 3 = 38400 baud
Adr Device address Modbus	0.. **1**.. 254	Address in the data network
dP Device address Profibus	0..**125**	only withRWF55.6x
dtt Remote detection time	0.. **30**.. 7200s	0 = swiched-off

(**bold** = factory settings)

Manual control :

In order to manual change the burner load, while firing keep pushing the **ESC** button for more than 5 s; on the lower green display **Hand** appears.

using the **UP** and **DOWN** arrows, the load varies.

Keep pushing the **ESC** button for getting the normal operation again.

NB: every time the device shuts the burner down (start led switched off - contact 1N-1P open), the manual control is not active.

Device self-setting (auto-tuning):

If the burner in the steady state does not respond properly to heat generator requests, you can activate the Device's self-setting function, which recalculates PID values for its operation, deciding which are most suitable for the specific kind of request

Follow the below instructions:

push the **UP** and **DOWN** arrows for more than 5 s; on the green lower display **tUnE** appears. Now the device pushes the burner to increase and decrease its output. During this time, the device calculates **PID** parameters (**Pb1**, **dt** and **rt**). After the calculations, the **tUnE** is automatically deactivated and the device has already stored them.

In order to stop the Auto-tuning function while it works, push again the **UP** and **DOWN** arrows for more than 5 s. The calculated **PID** parameters can be manually modified following the previously described instructions.

Display of software version :

The software version is shown by pushing Enter + UP arrow on the upper display.

Weather-compensated setpoint shifting(climatic regulation):

The RWF55 can be configured so that weather-compensated setpoint shifting is activated when an LG-Ni1000 outside sensor or a Pt1000 is connected (see parameter **InP3**).

To take into account the time response of a building, weather-compensated setpoint shifting uses the attenuated outside temperature rather than the current outside temperature

The minimum and maximum setpoints can be set using the lower setpoint limit **SPL** and the upper setpoint limit **SPH** of the menù **Crtr**.

The system also prevents the lower working range limit **oLLo** and upper working range limit **oLHi** from exceeding/dropping below the system temperature limits.

The heating curve describes the relationship between the boiler temperature setpoint and the outside temperature. It is defined by 2 curve points. For 2 outside temperatures, the user defines the boiler temperature setpoint that is required in each case. The heating curve for the weather-compensated setpoint is calculated on this basis. The effective boiler temperature setpoint is limited by the upper setpoint limit **SPH** and the lower setpoint limit **SPL**.

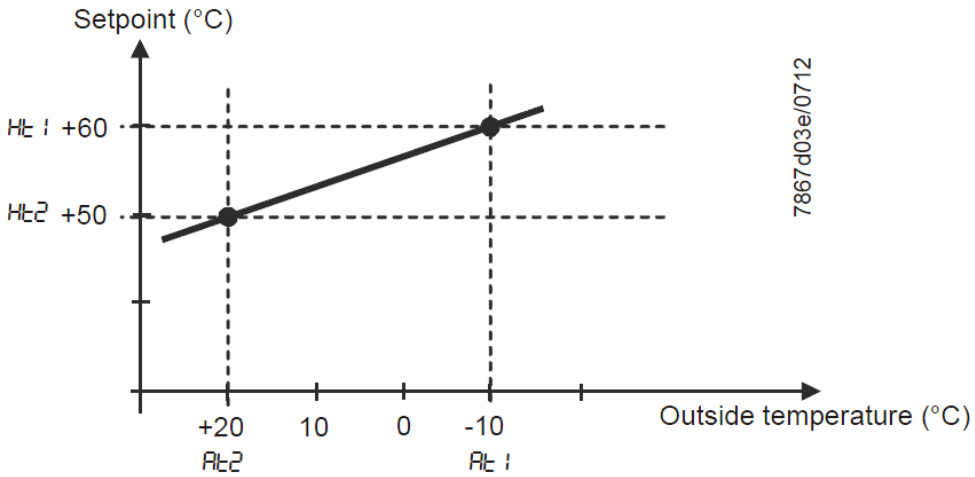

For setting climatic regulation function set:

PArA > parameters**At1, Ht1, At2, Ht2**

ConF > InP > InP3 parameters**SEn3, FnC3 = 1** (Weather-compensated setpoint).

Modbus interface

The tables that follow in this chapter specify the addresses of the readable and writable words that the customer is able to access. The customer may read and/or write the values using SCADA programs, PLCs, or similar.

The entries under Access have the following meanings:

R/O Read Only, value can only be read

R/W Read/Write, value can be read and written

The number of characters specified under Data type in the case of character strings includes the final \0.

Char10 means that the text is up to 9 characters long. The final \0 character is then added to this

User level

Address	**Access**	**Data type**	Signal reference	Parameter
0x0000	R/O	Float	X1	Analog input InP1
0x0002	R/O	Float	X2	Analog input InP2
0x0004	R/O	Float	X3	Analog input InP2
0x0006	R/O	Float	WR	Actual setpoint
0x0008	R/W	Float	SP1	Setpoint 1
0x000A	R/W	Float	SP2 (= dSP)	Setpoint 2
0x1035	R/O	Float	---	Analog input InP3 (unfiltered)
0x1043	R/O	Float	---	Actual angular positioning
0x1058	R/O	Word	B1	Burner alarm

Parameter level

Address	**Access**	**Data type**	Signal reference	Parameter
0x3000	R/W	Float	Pb1	Proportional range 1
0x3004	R/W	Float	dt	Derivative action time
0x3006	R/W	Float	rt	Integral action time
0x300C	R/W	Float	db	Dead band
0x3012	R/W	Word	tt	Controlling element running time
0x3016	R/W	Float	HYS1	Switch-on threshold
0x3018	R/W	Float	HYS2	Switch-off threshold down
0x301A	R/W	Float	HYS3	Switch-off threshold up
0x301C	R/W	Float	HYS4	Switch-on threshold (cooling)
0x301E	R/W	Float	HYS5	Switch-off threshold down (cooling)
0x3020	R/W	Float	HYS6	Switch-off threshold up (cooling)
0x3022	R/W	Float	**q**	Reaction threshold
0x3080	R/W	Float	At1	Outside temperature 1
0x3082	R/W	Float	Ht2	Boiler temperature 1
0x3084	R/W	Float	At2	Outside temperature 2
0x3086	R/W	Float	Ht2	Boiler temperature 2

Configuration level

Address	Access	Data type	Signal reference	Parameter
0x3426	R/W	Float	SCL1	Start of display input 1
0x3428	R/W	Float	SCH1	End of display input 1
0x3432	R/W	Float	SCL2	Start value input 2
0x3434	R/W	Float	SCH2	End value input 2
0x3486	R/W	Float	SPL	Start of setpoint limitation
0x3488	R/W	Float	SPH	End of setpoint limitation
0x342A	R/W	Float	OFFS1	Offset input E1
0x3436	R/W	Float	OFFS2	Offset input E2
0x343A	R/W	Float	OFFS3	Offset input E3
0x1063	R/W	Word	FnCt	Ramp function
0x1065	R/W	Float	rASL	Ramp slope
0x1067	R/W	Float	toLP	Tolerance band ramp
0x1069	R/W	Float	rAL	Limit value
0x1075	R/W	Float	dtt	Remote Detection Timer
0x1077	R/W	Float	dF1	Filter constant input 1
0x1079	R/W	Float	dF2	Filter constant input 2
0x107B	R/W	Float	dF3	Filter constant input 3
0x107D	R/O	Float	oLLo	Lower working range limit
0x107F	R/O	Float	oLHi	Upper working range limit
0x106D	R/W	Word	FnCt	Alarm relay function
0x106F	R/W	Float	AL	Alarm relay limit value (limit value alarm)
0x1071	R/W	Float	HYSt	Alarm relay hysteresis

Remote operation

Address	Access	Data type	Signal reference	Parameter
0x0500	R/W	Word	REM	Activation remote operation *
0x0501	R/W	Word	rOFF	Controller OFF in remote setpoint **
0x0502	R/W	Float	rHYS1	Switch-on threshold remote
0x0504	R/W	Float	rHYS2	Switch-off threshold down remote
0x0506	R/W	Float	rHYS3	Switch-off threshold up remote
0x0508	R/W	Float	SPr	Setpoint remote
0x050A	R/W	Word	RK1	Burner release remote operation
0x050B	R/W	Word	RK2	Relay K2 remote operation
0x050C	R/W	Word	RK3	Relay K3 remote operation
0x050D	R/W	Word	RK6	Relay K6 remote operation
0x050E	R/W	Word	rStEP	Step-by-step control remote operation
0x050F	R/W	Float	rY	Angular positioning output remote operation
0x0511	R/W	Float	rHYS4	Switch-on threshold remote (cooling)
0x0513	R/W	Float	rHYS5	Switch-off threshold down remote (cooling)
0x0515	R/W	Float	rHYS6	Switch-off threshold up remote (cooling)

Legend
* = Local
** = Controller OFF

Dati dell'apparecchio

Address	Access	Data type	Signal reference	Parameter
0x8000	R/O	Char12	---	Software version
0x8006	R/O	Char14	---	VdN number

Stato dell'apparecchio

Address	Access	Data type	Signal reference	Parameter
0x0200	R/O	Word	---	Outputs and states
			Bit 0	Output 1
			Bit 1	Output 3
			Bit 2	Output 2
			Bit 3	Output 4
			Bit 8	Hysteresis limitation
			Bit 9	Control system
			Bit 10	Self-optimization
			Bit 11	Second setpoint
			Bit 12	Measuring range overshoot InP1
			Bit 13	Measuring range overshoot InP2
			Bit 14	Measuring range overshoot InP3
			Bit 15	Calibration mode
0x0201	R/O	Word	---	Binary signals and hardware detection
			Bit 0	Operation mode 2-stage
			Bit 1	Manual mode
			Bit 2	Binary input D1
			Bit 3	Binary input D2
			Bit 4	Thermostat function
			Bit 5	First controller output
			Bit 6	Second controller output
			Bit 7	Alarm relay
			Bit 13	Analog output available
			Bit 14	Interface available

Electric connections :

With 7 pins connector version

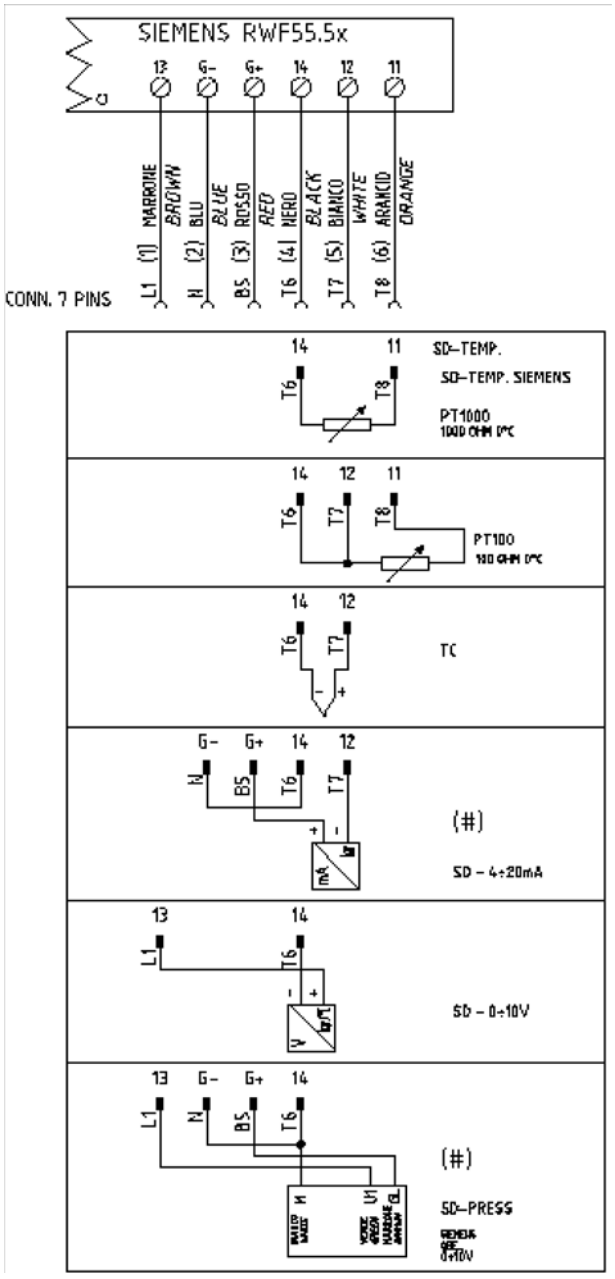

With terminals version

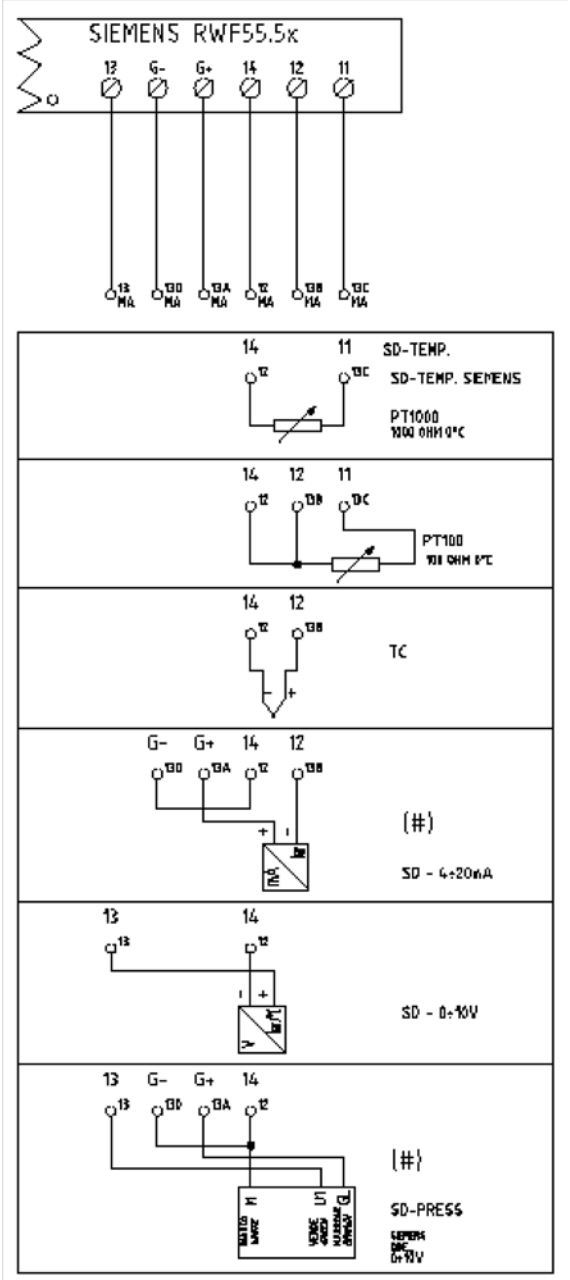

Corrispondences bornes entre RWF55.5x y RWF40.0x0Matches terminals betweenRWF55.5x and RWF40.0x0

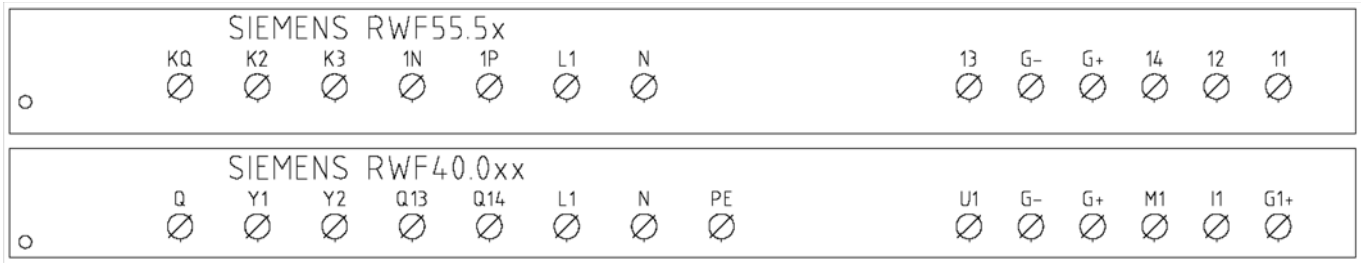

Parameters summarising for RWF55.xx :

Navigation menù	ConF					ConF									
	Inp														
	Inp1					Cntr		diSP	PArA						Opr
Types of probe	SEn1	OFF1	SCL	SCH	Unit	SPL	SPH	dECP	Pb. 1	dt	rt	tt	HYS1 (*)	HYS3 (*)	SP1 (*)
Siemens QAE2120…	6	0	needless	needless	1	30	95	1	10	80	350	(#)	-5	5	80 °C
Siemens QAM2120..	6	0	needless	needless	1	0	80	1	10	80	350	(#)	-2,5	2,5	40°C
Pt1000 (130°C max.)	4	0	needless	needless	1	30	95	1	10	80	350	(#)	-5	5	80°C
Pt1000 (350°C max.)	4	0	needless	needless	1	0	350	1	10	80	350	(#)	-5	10	80°C
Pt100 (130°C max.)	1	0	needless	needless	1	0	95	1	10	80	350	(#)	-5	5	80°C
Pt100 (350°C max)	1	0	needless	needless	1	0	350	1	10	80	350	(#)	-5	10	80°C
Probe4÷20mA / 0÷1,6bar	16	0	0	160	needless	0	160	0	5	20	80	(#)	0	20	100 kPa
Probe4÷20mA / 0÷3bar	16	0	0	300	needless	0	300	0	5	20	80	(#)	0	20	200 kPa
Probe 4÷20mA / 0÷10bar	16	0	0	1000	needless	0	1000	0	5	20	80	(#)	0	50	600 kPa
Probe 4÷20mA / 0÷16bar	16	0	0	1600	needless	0	1600	0	5	20	80	(#)	0	80	600 kPa
Probe 4÷20mA / 0÷25bar	16	0	0	2500	needless	0	2500	0	5	20	80	(#)	0	125	600 kPa
Probe 4÷20mA / 0÷40bar	16	0	0	4000	needless	0	4000	0	5	20	80	(#)	0	200	600 kPa
Probe 4÷20mA / 0÷60PSI	16	0	0	600	needless	0	600	0	5	20	80	(#)	0	30	300 (30PSI)
Probe4÷20mA / 0÷200PSI	16	0	0	2000	needless	0	2000	0	5	20	80	(#)	0	75	600 (60PSI)
Probe4÷20mA / 0÷300PSI	16	0	0	3000	needless	0	3000	0	5	20	80	(#)	0	120	600 (60PSI)
Siemens QBE2002 P4	17	0	0	400	needless	0	400	0	5	20	80	(#)	0	20	200 kPa
Siemens QBE2002 P10	17	0	0	1000	needless	0	1000	0	5	20	80	(#)	0	50	600 kPa
Siemens QBE2002 P16	17	0	0	1600	needless	0	1600	0	5	20	80	(#)	0	80	600 kPa
Siemens QBE2002 P25	17	0	0	2500	needless	0	2500	0	5	20	80	(#)	0	125	600 kPa
Siemens QBE2002 P40	17	0	0	4000	needless	0	4000	0	5	20	80	(#)	0	200	600 kPa
Signal 0÷10V	17	0	needless	needless	needless	needless	needless	needless	5	20	80	(#)			
Signal 4÷20mA	16	0	needless	needless	needless	needless	needless	needless	5	20	80	(#)			

NOTE:
(#) tt – servo control run time
SQL33 ; STM30; SQM10; SQM40; SQM50; SQM54 = 30 (secondi) - STA12B3.41; SQN30.251; SQN72.4A4A20 = 12 (secondi)
(*)These values are factory set - values must be set during operation at the plant based on the real working temperature/pressure value.

WARNING :
With pressure probes in bar the parameters SP1, SCH, SCL, HYS1, HYS3 must be set and displayed in kPa (kilo Pascal); 1bar = 100,000Pa = 100kPa.
With pressure probes in PSI the parameters SP1, SCH, SCL, HYS1, HYS3 must be set and displayed in PSI x10 (example: 150PSI > I display 1500).

APPENDIX: PROBES CONNECTION

To assure the utmost comfort, the control system needs reliable information, which can be obtained provided the sensors have been installed correctly. Sensors measure and transmit all variations encountered at their location.

Measurement is taken based on design features (time constant) and according to specific operating conditions.With wiring run in raceways, the sheath (or pipe) containing the wires must be plugged at the sensor's terminal board so that currents of air cannot affect the sensor's measurements.

Ambient probes (or ambient thermostats)

Installation

The sensors (or room thermostats) must be located in reference rooms in a position where they can take real temperature measurements without being affected by foreign factors.

It's good to be admired …even better to be effective

Heating systems: the room sensor must not be installed in rooms with heating units complete with thermostatic valves. Avoid all sources of heat foreign to the system.

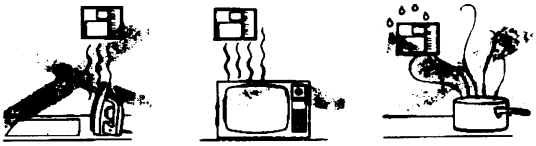

Location

On an inner wall on the other side of the room to heating unitsheight above floor 1.5 m, at least 1.5 m away from external sources of heat (or cold).

.

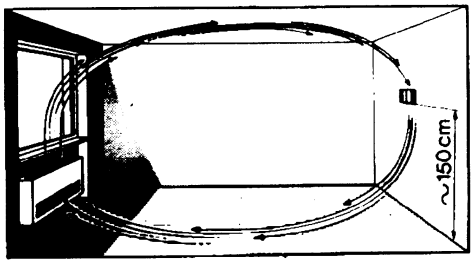

Installation position to be avoided

near shelving or alcoves and recesses, near doors or win-dows, inside outer walls exposed to solar radiation or currents of cold air, on inner walls with heating system pipes, domestic hot water pipes, or cooling system pipes running through them.

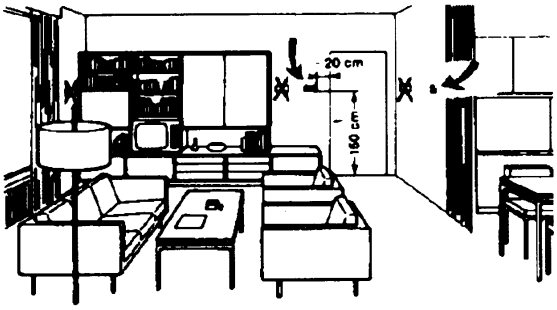

Outside probes (weather)Installation

In heating or air-conditioning systems featuring adjustment in response to outside temperature, the sensor's positioning is of paramount importance.

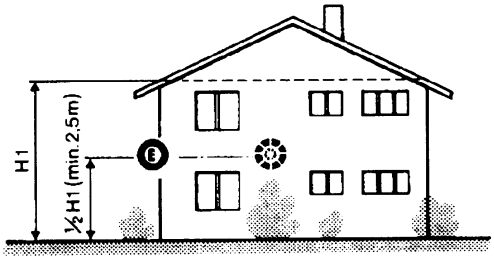

General rule: en on the outer wall of the building where the living rooms are, never on the south-facing wall or in a position where they will be affected by morning sun. If in any doubt, place them on the north or north-east façade.

Positions to be avoidedH

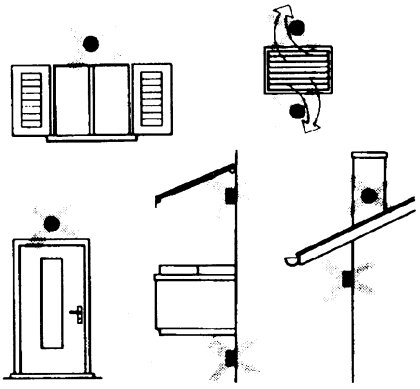

Avoid installing near windows, vents, outside the boiler room, on chimney breasts or where they are protected by balconies, cantilever roofs .

The sensor must not be painted (measurement error) .

Duct or pipe sensors

Installing temperature sensors

For measuring outlet air:

"after delivery fan or

"after coil to be controlled, at a distance of at least 0,5 m

For measuring room temperature:

"before return air intake fan and near room's return airintake.

For measuring saturation temperature: after mist eliminator.

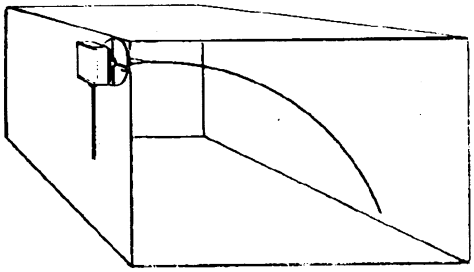

Bend 0.4m sensor by hand (never use tools) as illustrated .

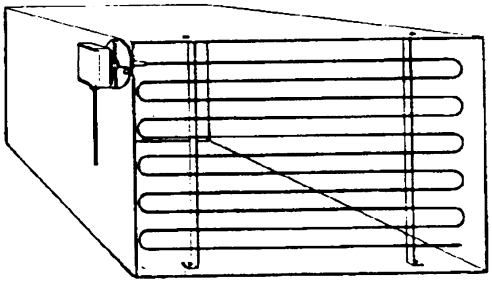

Use whole cross-section of duct, min. distance from walls 50 mm, radius of curvature 10 mm for 2m or 6m sensors

Installing combined humidity sensors

As max. humidity limit sensor on outlet (steam humidifiers) .

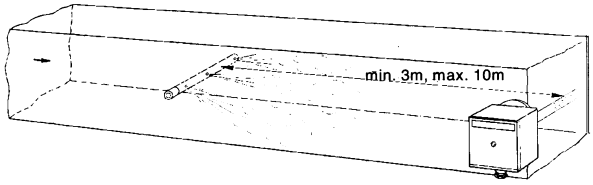

Installing pressure sensors

A - installation on ducts carrying fluids at max. temperature 80°C

B - installation on ducts at temperature over 80°C and for refrigerants

C - installation on ducts at high temperatures :

·"increase length of siphon

"place sensor at side to prevent it being hit by hot air coming from the pipe.

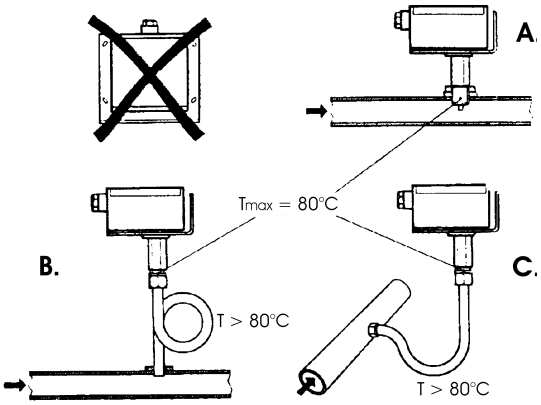

Installing differential pressure sensors for water

Installation with casing facing down not allowed.

With temperature over 80°C, siphons are needed.

To avoid damaging the sensor, you must comply with the following instructions :

when installing: make sure pressure difference is not greater than the value permitted by the sensor

when there are high static pressures, make sure you insert shutoff valves A-B-C.

Putting into operation

Start disable

1=open C1=open C

2=open A2=close B

3=open B3=close A

4= close C

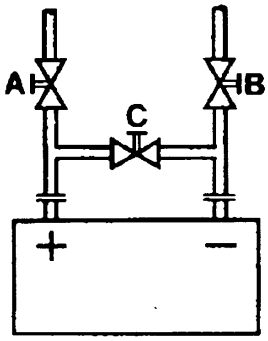

Immersion or strap-on sensors

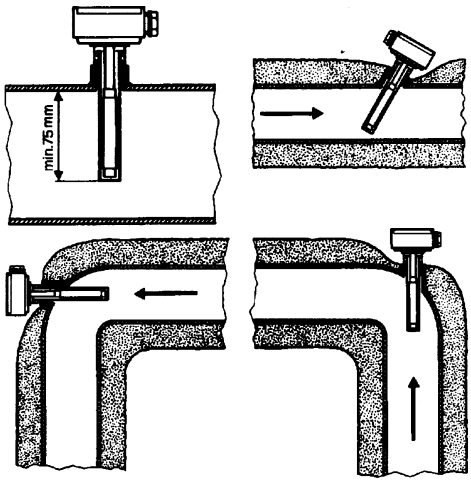

Immersion probes installation

Sensors must be installed on the stretch of pipe in which fluid circulates all the time.

The rigid stem (sensing element doing the measuring) must be inserted by at least 75mm and must face the direction of flow.

Recommended locations: on a bend or on a straight stretch of pipe but tilted by 45° and against the flow of fluid.

Protect them to prevent water from infiltrating (dripping gates, condensation from pipes etc.) .

Installing QAD2.. strap-on sensors

Make sure fluid is circulating in the chosen location.

Eliminate insulation and paintwork (including rust inhibitor) on a min. 100mm length of pipe.

Sensors come with straps for pipes up to 100 mm in diameter .

Placing the probes (QAD22.../QAE21.../QAP21.../RCA...)

With pumps on outlet

with 3 ways valves / with 4 ways valves

Panel system / burner control

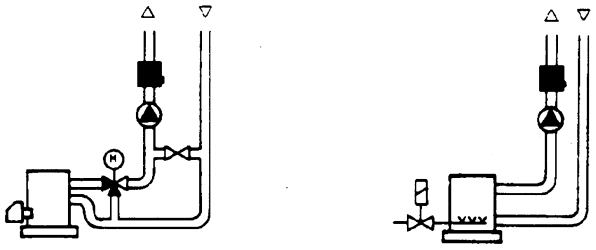

With pumps on return

with 3 ways valves / with 4 ways valves

Strap-on or immersion sensors?

QAD2.. strap-on sensors

Advantages :

- 10 sec. time constant
- Installed with system running (no plumbing work)
- Installation can be changed easily if it proves incorrect

ΠLimits:

- Suitable for pipe diameters max. 100 mm
- Can be affected by currents of air etc.

QAE2... immersion sensors

Advantages:

- Measure "mean" fluid temperature
- No external influence on measurement such as: currents of air, nearby pipes etc.

Limits:

- Time constant with sheath: 20 sec.
- Hard to change installation position if it proves incorrect

Installing differential pressure probes for air

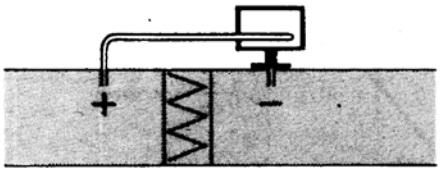

A - Control a filter (clogging)

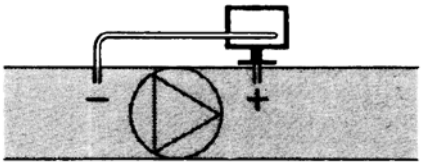

B - Control a fan (upstream/downstream)

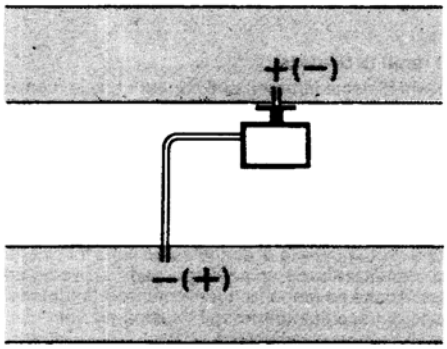

C - Measurement of difference in pressure between two ducts

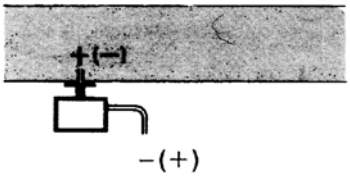

D - Measurement of difference in pressure between two rooms or of inside of duct and outside

Basic principles

Measuring static pressure(i.e. pressure exerted by air on pipe walls)

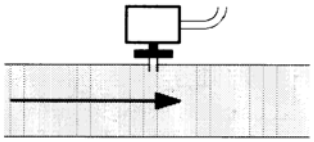

Measuring dinamic pressure

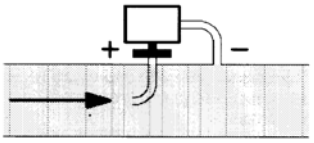

$$Pd = \frac{y\,\vartheta^2}{2g}$$

Legend

y	Kg/m3, specific weight of air
q	m/s, air speed
g	9.81 m/s2 gravity acceleration
Pd	mm C.A., dynamic pressure

Measuring total pressure

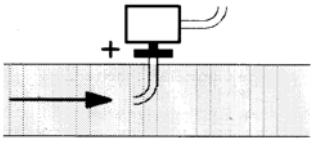

Note: Specifications and data subject to change. Errors and omissions excepted.

MANUALE USER SUPPORT

MULTI-THERMOSTAT

MCX06C

MCX06C is a multi-thermostat with four 100k NTC inputs. It can control up to 4 temperatures showing them (not more than 2 at the same time) on a couple of displays.
It is used to check and adjust oil heater temperatures. it works as follows:
as soon as the burner control gives the GO to the digital 1 input (terminals DI1-COM), the adjustment program runs (the relevant LED is ON). Reading the outlet temperature through the probe **Pb3** (terminals AI3-COM), a PID signal is produced. This signal becomes the set-point for the electric resistors. The electric resistors temperature is read through the probe **Pb1** (terminals AI1-COM) so that a second PID signal is produced. This second PID drives a couple of SCR by means of 0-10 V impulses in order to control the electric resistors temperature.
When the burner is in stand-by, resistor set-point is kept at the temperature set in parameter "**p30**" (see parameter group **REG**).
Probe **Pb4** (terminals AI4-COM) controls the inner heater temperature. As soon the relevant set-point is got, it drives the output number 4 (terminals C4-NO4) linked to the relais KTCN. This allows the oil pump to start and also the burner control proceeds with its cycle.
When set-point **trS** is got to, output number 5 is ON (terminals C5-NO5) linked to the relais KTRS. It switches the resistors off and activates an alarm on the device.
Probe **Pb2** (terminals AI2-COM), when fitted, drives output number 2 (terminals C2-NO2) linked to the relais KTCI. This allows the burner control to proceed with ignition.
See below the set-point recommended figures.

User interface:

Device:

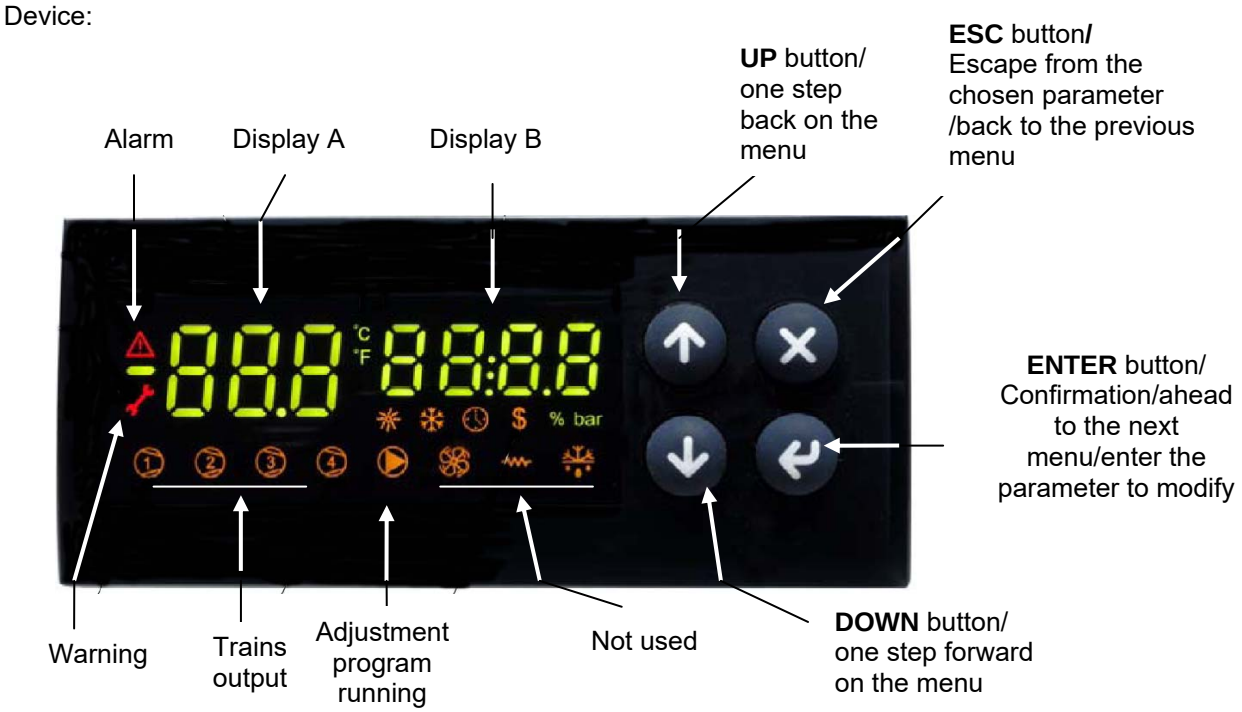

Note :
In normal operation, the display A shows the oil tank resistor temperature (probe Pb1).
In normal operation, the display B shows the oil output temperature (probe Pb3).

Connections from terminal side :

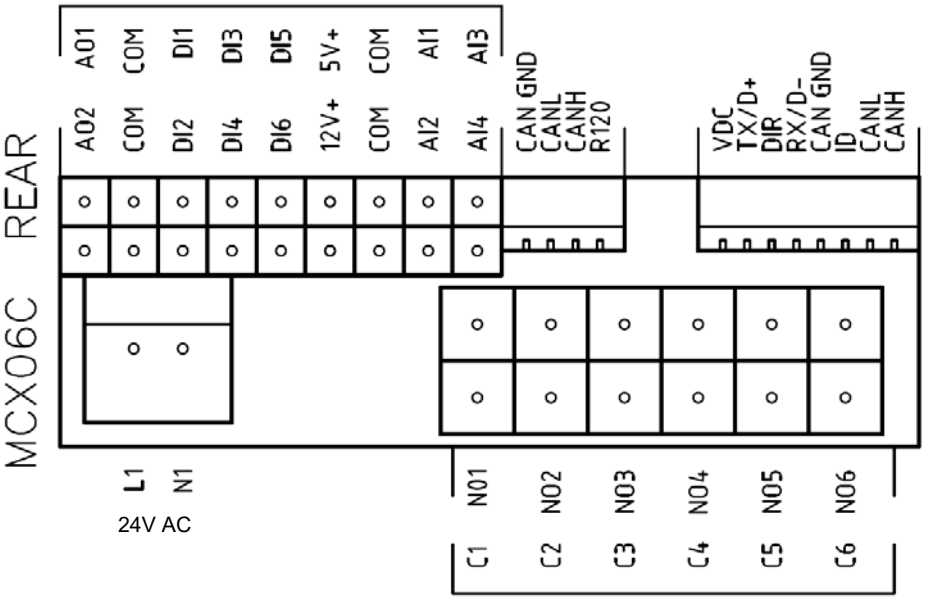

Probe connection:

input **AI1** = probe **Pb1** = set-point "**tr**" = oil heater temperature probe;
input **AI2** = probe **Pb2** = set-point "**tCI**" = plant consent temperature probe (when installed);
input **AI3** = probe **Pb3** = set-point "**OIL**" = oil heater output temperature probe (PID regulation);
input **AI4** = probe **Pb4** = set-point "**tcn**" = oil heater consent temperature probe.

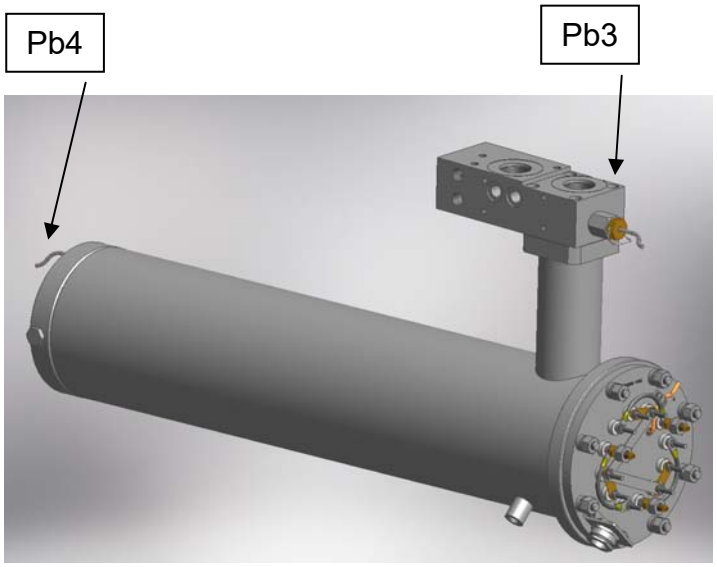

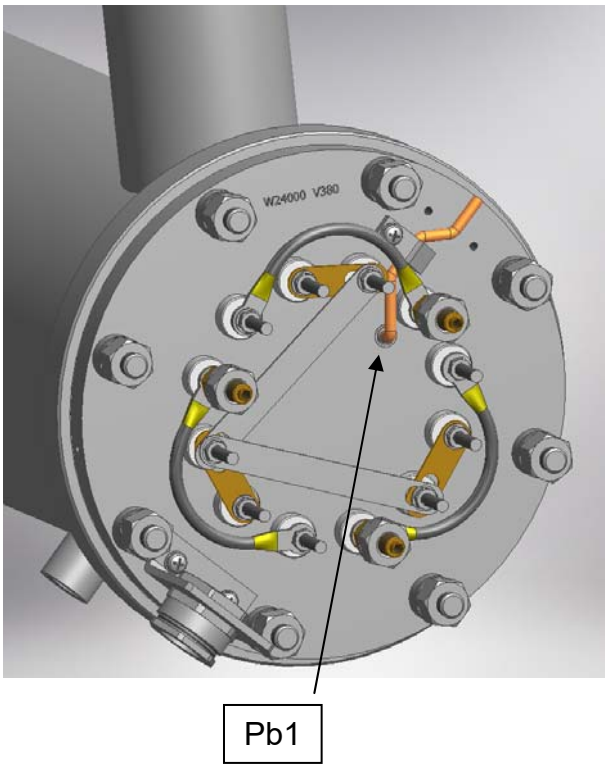

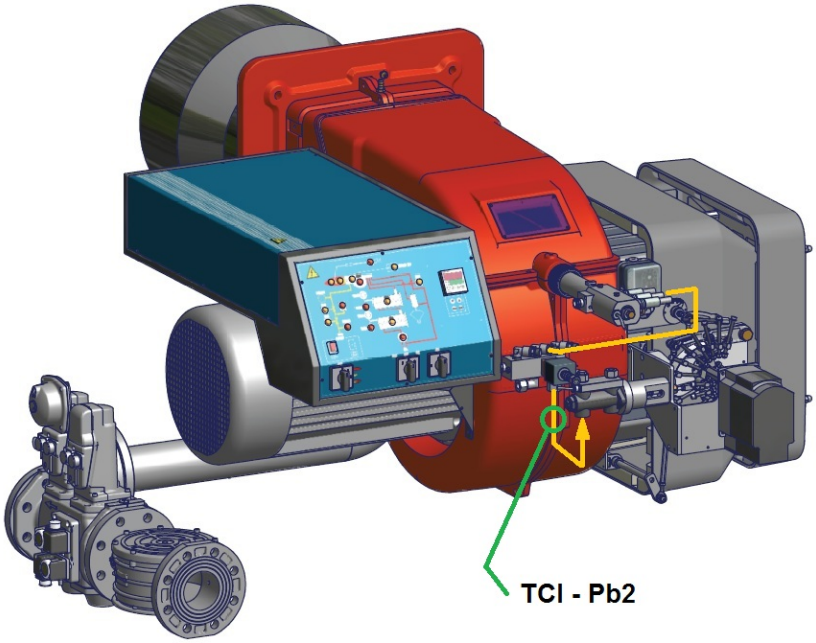

(**tCI - Pb2** probe only for mechanical atomizing burners)

Menu :
To enter the menu below, keep pushing **ENTER** for more than 3 s.

Menu code	Sub-menu code	Function	Notes
Prb		Probes values	You can see in sequence the 4 probe values (UP and DOWN keys): the probe code is on display A (Pb1,..., Pb4) and the probe value is on display B (not fitted or out of work probes show "----").
Log		Login	It defines the access level to menu and parameters (password)
	PAS	Password	Password input
Par		Parameters menu	Access to parameters (you have to login first)
	CnF	Configuration menu	Parameter configuration
	rEG	Regulation menu	Set to set-point, probe, thresholds etc.
ALA		Alarm menu	Access to alarm management
	Act	Active alarms	Show the active alarms
	rES	Reset alarms	Reset of the manual reset alarms
Loc		Lock/Unlock functions	Not used
InF	rEL	Software version	Installed software version
tUN		Autotuning	Activation On, deactivation ESC PID parameter autotuning

Login:
All the parameters inside the **Par** menu are locked by a password.
Without password, only set-points can be modified.
To login, on the log menu, press **ENTER** for more than 3 s. Input your password (level 2 or 3) inside **PAS**
With password for level 3 all the data can be set.

submenu **CnF - configuration parameters group :**

Menu	Parameter	Description	Additional description	Min	Max	Default	U.M.	Visibility condition	Password level	Modbus index
CnF		**CONFIGURATION**							0	
AI1		Analog Input 1							1	
	A1P	Probe 1 Presence	This parameter enables or disables the probe	0	1	1			2	1
	A1C	Calibration Probe 1	Don't modify it	-20,0	20,0	0,0	°C	A1P >0	3	2
AI2		Analog Input 2							1	
	A2P	Probe 2 Presence	This parameter enables or disables the probe	0	1	1			2	3
	A2C	Calibration Probe 2	Don't modify it	-20,0	20,0	0,0	°C	A2P >0	3	4
AI3		Analog Input 3							1	
	A3P	Probe 3 Presence	This parameter enables or disables the probe	0	4	1			2	5
	A3L	Min. Value conversion AI3	Don't modify it	-999,9	999,9	0,0		A3P >2	3	6
	A3H	Max. Value conversion AI3	Don't modify it	-999,9	999,9	30,0		A3P >2	3	7
	A3C	Calibration Probe 3	Don't modify it	-20,0	20,0	0,0	°C	A3P >0	3	8
AI4		Analog Input 4							1	
	A4P	Probe 4 Presence	This parameter enables or disables the probe	0	4	1			2	9
	A4L	Min. Value conversion AI4	Don't modify it	-999,9	999,9	0,0		A4P >2	3	10
	A4H	Max. Value conversion AI4	Don't modify it	-999,9	999,9	30,0		A4P >2	3	11
	A4C	Calibration Probe 4	Don't modify it	-20,0	20,0	0,0	°C	A4P >0	3	12
dI		Digital input							1	
	dI1	Input 1 polarity (Pump)	Change type of digital input (NC o NO)	0	1	1			3	13
	dI2	Alarm polarity from input 2	Change type of digital input (NC o NO)	0	2	2			2	14
	dI3	Alarm polarity from input 3	Change type of digital input (NC o NO)	0	2	2			2	15
	dI4	Alarm polarity from input 4	Change type of digital input (NC o NO)	0	2	2			2	16
	dI5	Alarm polarity from input 5	Change type of digital input (NC o NO)	0	2	2			2	17
	dI6	Alarm polarity from input 6	Change type of digital input (NC o NO)	0	2	2			2	18
dI		Digital output Alarm and Warning							1	
	dO5	Polarity output Warning	Change type of digital input (NC o NO)	0	1	0			3	19
	dO6	Polarity output Alarm	Change type of digital input (NC o NO)	0	1	0			3	20
SIC		Safety probe							1	
	SIp	Selection of safety probe	Probe which also activates the relay Warning (ns. KTRS)	0	4	4			3	21
SyS		Syistem							0	
	dSA	display A output	Probe temperature or set-point to be displayed in the left display	0	8	1			3	22
	dSb	display B output	Probe temperature or set-point to be displayed in the right display	0	8	3			3	23
PAS		Password							1	
	PL1	Password level 1		0	9999	0			1	32
	PL2	Password level 2		0	9999				2	33
	PL3	Password level 3		0	9999				3	34

Menu	Parameter	Description	Additional description	Min	Max	Default	U.M.	Visibility condition	Level	Modbus index
tUN		Autotuning							3	
	tU1	Output temperature hysteresis	Don't modify it	0	50,0	0,5	°C		3	35
	tU2	Startup number	Don't modify it	0	5	2			3	36
	tU3	Measurement cycles number	Don't modify it	1	4	2			3	37
	tU4	Max. differential command exit	Don't modify it	0,01	10,00	10,00	V		3	38
	tU5	Differential reduction exit command (%)	Don't modify it	0	100	15			3	39
	tU6	Calculating mode: 0= Symmetrical; 1=Asymmetrical; 2=Simple	Don't modify it	0	2	2			3	40
	tU7	Enabling	Don't modify it	0	1	1			3	41

Submenu **REG – regulation parameters group :**

Menu	Parameter	Description	Additional description	Min	Max	Default	U.M.	Visibility condition	Level	Modbus index
REG		**REGULATION**							0	
Pb1		Probe 1							0	
	rES	Set-point Probe 1 (Tank resistor)	Don't modify it	-50,0	200,0	0,0	°C		3	42
	AL1	Probe 1 - Low Temperature Alarm Threshold	Don't modify it	-50,0	200,0	-50,0	°C		3	43
	AH1	Probe 1 - High Temperature Alarm Threshold	Don't modify it	-50,0	200,0	200,0	°C		3	44
	d01	Probe 1 differential		0,0	20,0	3,0	°C		3	45
Pb2		Probe 2							0	
	tCI	Set-point Probe 2 (Plant Consent)	Plant consent according to table "**Set point adjustment**"	-50,0	200,0	120,0	°C		0	46
	AL2	Probe 2 - Low Temperature Alarm Threshold	Don't modify it	-50,0	200,0	-50,0	°C		2	47
	AH2	Probe 2 - High Temperature Alarm Threshold	Don't modify it	-50,0	200,0	200,0	°C		2	48
	d02	Probe 2 differential		0,0	20,0	3,0	°C		2	49
Pb3		Probe 3							0	
	rE3	Type of regulation of probe 3 (Oil tank exit)	Type of regulation 0= thermostat; 1= PID (don't modify)	0	1	1			3	50
	OIL	Set-point Probe 3 (Oil tank exit)	Nozzle oil temperature according to the table "**Set point adjustment**"	-50,0	200,0	130,0	°C		0	51
	AL3	Probe 3 - Low Temperature Alarm Threshold (Oil tank exit)	Don't modify it	-50,0	200,0	-50,0	°C		2	52
	AH3	Probe 3 - High Temperature Alarm Threshold (Oil tank exit)	Don't modify it	-50,0	200,0	200,0	°C		2	53
	Pb3	Proportional band for PID Probe 3 (Oil tank exit)	Proportional band for first PID regulation	0,0	200,0	60,0			3	54
	db3	Dead Zone for PID Probe 3 (Oil tank exit)	Dead zone for first PID regulation	0,0	20,0	0,0	°C	rE3 =1	3	55
	rt3	Integral Time (Ti) for PID Probe 3 (Oil tank exit)	Integral time for first PID regulation	0,0	1000,0	120,0	s	rE3 =1	3	56
	dt3	DerivativeTime (Td) for PID Probe 3 (Oil tank exit)	Derivative time for first PID regulation (~ ¼ di rt3)	0,0	300,0	30,0	s	rE3 =1	3	57
	db3	Dead Zone for PID Probe 3 (Oil tank exit)	Dead zone for first PID regulation	0,0	20,0	0,0	°C	rE3 =1	3	55

Menu	Parameter	Description	Additional description	Min	Max	Default	U.M.	Visibility condition	Level	Modbus index
	pi1	Overshooting for Integral action (Oil tank exit)	Don't modify it	100	1000	200		rE3 =1	3	58
	pi2	Derivative action enabling (Oil tank exit)	Don't modify it	0	1	1		rE3 =1	3	59
	pi3	Filtering factor for derivative action (Oil tank exit)	Don't modify it	1	100	20		rE3 =1	3	60
	pi4	Duty cicle PWM for output DO3 and/or AO1 (0-10V)	Don't modify it	1	300	5	s	rE3 =1	3	61
	SL3	Output selection DO3 and/or AO1 (0-10V)	Digital selection output for control thyristors; Don't modify it	0	2	AO1			3	62
	p21	Proportional band for PID Probe 1 (Tank resistor)	Proportional band for second PID regulation	0,0	200,0	50,0		rE3 =1	3	63
	p22	Dead Zone for PID Probe 1 (Tank resistor)	Dead zone for second PID regulation	0,0	20,0	0,0	°C	rE3 =1	3	64
	p23	Integral Time (Ti) for PID Probe 1 (Tank resistor)	Integral time for second PID regulation	0,0	1000,0	110,0	s	rE3 =1	3	65
	p24	DerivativeTime (Td) for PID Probe 1 (Tank resistor)	Derivative time for second PID regulation	0,0	300,0	23,0	s	rE3 =1	3	66
	p25	Overshooting for Integral action (Tank resistor)	Don't modify it	100	1000	200		rE3 =1	3	67
	p26	Derivative action enabling (Tank resistor)	Don't modify it	0	1	1		rE3 =1	3	68
	p27	Filtering factor for derivative action (Tank resistor)	Don't modify it	1	100	20		rE3 =1	3	69
	p28	Min Output PID Probe 3 (Oil tank exit)	Minimum value tank resistor set-point (delta of 100°C above p29)	0,0	1000,0	80,0	°C	rE3 =1	3	70
	p29	Max Output PID Probe 3 (Oil tank exit)	Maximum valuetank resistor set-point	0,0	1000,0	180,0	°C	rE3 =1	3	71
	SP0	Set-point Tank Resistor with oil pump stops (stand by)	Set-point of maintaining resistance during stand by "**Set point adjustment**"	-50,0	200,0	140,0	°C	rE3 =1	0	72
Pb4		Probe 4							0	
	tcn	Setpoint Probe 4 (Oil consent)	Oil consent according table "**Set point adjustment**"	-50,0	200,0	110,0	°C		0	73
	AL4	Low Threshold Probe 4		-50,0	200,0	-50,0	°C		2	74
	trS	Probe 4 - High Temperature Alarm Threshold (Safety Thermostat)	Tank resistor safety temperature according table "**Set point adjustment**"	-50,0	200,0	190,0	°C		0	75
	d04	Probe 4 differential		0,0	20,0	3,0	°C		2	76

Alarms & Warning:
When the red triangle on the top left lights, one or more alarms are activated.
When the red key on the left lights, the output N05-C5 is active and the relay **KTRS** switches the resistors OFF.
Check the reason, correct the failure and, as soon as the temperature is lower than **trS**, reset it through **ALA**/**rES .**
In order to show active alarms and warnings, select the relevant menu through **ALA**/**Act**.and, using the **UP** and **DOWN** buttons, scroll the lines.
In order to perform the manual reset, select **ALA**/**rES**.

Code	Description	Sourse	Active simbol	Reset type
trS	High temperature resistors alarm	probe Pb4 > value trS	red key	Manual
EP1	Probe Pb1 fault	Probe Pb1 fault	red triangle	Automatic
EP2	Probe Pb2 fault	Probe Pb2 fault	red triangle	Automatic
EP3	Probe Pb3 fault	Probe Pb3 fault	red triangle	Automatic
EP4	Probe Pb4 fault	Probe Pb4 fault	red triangle	Automatic

Set point adjustment:

All the parameters inside the **Par** menu are locked by a password. The user can modify only set points, without using any passwords.
The oil viscosity at the nozzle, should be about 1,5°E, which guarantees correct and safe functioning of the burner.
The temperature values in the table, guarantee the respect of that parameter and are valid when the pre heating tank is installed on the burner. For different configurations , please refer to the chapter "Recommendations to design heavy oil feeding plants" on the burner manual
Here below recommended set points:

Menu path				Oil viscosity at 50 °C according to the letter shown in the burner model				
				P	**N**	**E**	**D**	**H**
				89 cSt	< 50 cSt	> 50 cSt < 110 cSt	> 110 cSt < 400 cSt	> 400 cSt < 4000 cSt
				12 °E	< 7°E	> 7 °E < 15 °E	> 15 °E < 50 °E	> 50 °E < 530 °E
Par								
rEG	Pb1	tr	Oil heater temperature probe	parameter not visible				
	Pb2	tCI	Plant consent temperature probe (when installed)	20 °C	70 °C	70 °C	70 °C	---
	Pb3	Oil	oil heater output temperature probe (PID regulation);	60-70 °C	110-120 °C	120-130 °C	130-140 °C	140-150 °C
		SP0	Set-point oil heater with oil pump stopped (stand-by)	45 °C	120 °C	130 °C	140 °C	150 °C
	Pb4	tcn	Oil heater consent temperature probe	40 °C	100 °C	100 °C	110 °C	120 °C
		trS	Safety temperature tank resistors (manual reset)	120 °C	190-200 °C	190-200 °C	190-200 °C	190-200 °C

The above temperature values are suggested and refer to a plant designed according to the prescriptions in the burner user manual.
The suggested values can change in reference to the fuel oil specifications.