HTP1030
HTP1050
HTP1080

Gas - light oil dual fuel burners

MANUAL OF INSTALLATION - USE - MAINTENANCE

CIB UNIGAS

BURNERS - BRUCIATORI - BRULERS - BRENNER - QUEMADORES - ГОРЕЛКИ

M039180CD REV. 0.4 08/2016

DANGERS, WARNINGS AND NOTES OF CAUTION

THIS MANUAL IS SUPPLIED AS AN INTEGRAL AND ESSENTIAL PART OF THE PRODUCT AND MUST BE DELIVERED TO THE USER.

INFORMATION INCLUDED IN THIS SECTION ARE DEDICATED BOTH TO THE USER AND TO PERSONNEL FOLLOWING PRODUCT INSTALLATION AND MAINTENANCE.

THE USER WILL FIND FURTHER INFORMATION ABOUT OPERATING AND USE RESTRICTIONS, IN THE SECOND SECTION OF THIS MANUAL. WE HIGHLY RECOMMEND TO READ IT.

CAREFULLY KEEP THIS MANUAL FOR FUTURE REFERENCE.

1) GENERAL INTRODUCTION

- The equipment must be installed in compliance with the regulations in force, following the manufacturer's instructions, by qualified personnel.
- Qualified personnel means those having technical knowledge in the field of components for civil or industrial heating systems, sanitary hot water generation and particularly service centres authorised by the manufacturer.
- Improper installation may cause injury to people and animals, or damage to property, for which the manufacturer cannot be held liable.
- Remove all packaging material and inspect the equipment for integrity.

In case of any doubt, do not use the unit - contact the supplier.

The packaging materials (wooden crate, nails, fastening devices, plastic bags, foamed polystyrene, etc), should not be left within the reach of children, as they may prove harmful.

- Before any cleaning or servicing operation, disconnect the unit from the mains by turning the master switch OFF, and/or through the cut-out devices that are provided.
- Make sure that inlet or exhaust grilles are unobstructed.
- In case of breakdown and/or defective unit operation, disconnect the unit. Make no attempt to repair the unit or take any direct action.

Contact qualified personnel only.

Units shall be repaired exclusively by a servicing centre, duly authorised by the manufacturer, with original spare parts and accessories.

Failure to comply with the above instructions is likely to impair the unit's safety.

To ensure equipment efficiency and proper operation, it is essential that maintenance operations are performed by qualified personnel at regular intervals, following the manufacturer's instructions.

- When a decision is made to discontinue the use of the equipment, those parts likely to constitute sources of danger shall be made harmless.
- In case the equipment is to be sold or transferred to another user, or in case the original user should move and leave the unit behind, make sure that these instructions accompany the equipment at all times so that they can be consulted by the new owner and/or the installer.
- This unit shall be employed exclusively for the use for which it is meant. Any other use shall be considered as improper and, therefore, dangerous.

The manufacturer shall not be held liable, by agreement or otherwise, for damages resulting from improper installation, use and failure to comply with the instructions supplied by the manufacturer.The occurrence of any of the following circustances may cause explosions, polluting unburnt gases (example: carbon monoxide CO), burns, serious harm to people, animals and things:

- Failure to comply with one of the WARNINGS in this chapter
- Incorrect handling, installation, adjustment or maintenance of the burner
- Incorrect use of the burner or incorrect use of its parts or optional supply

2) SPECIAL INSTRUCTIONS FOR BURNERS

- The burner should be installed in a suitable room, with ventilation openings complying with the requirements of the regulations in force, and sufficient for good combustion.
- Only burners designed according to the regulations in force should be used.
- This burner should be employed exclusively for the use for which it was designed.
- Before connecting the burner, make sure that the unit rating is the same as delivery mains (electricity, gas oil, or other fuel).
- Observe caution with hot burner components. These are, usually, near to the flame and the fuel pre-heating system, they become hot during the unit operation and will remain hot for some time after the burner has stopped.

When the decision is made to discontinue the use of the burner, the user shall have qualified personnel carry out the following operations:

a Remove the power supply by disconnecting the power cord from the mains.

b) Disconnect the fuel supply by means of the hand-operated shut-off valve and remove the control handwheels from their spindles.

Special warnings

- Make sure that the burner has, on installation, been firmly secured to the appliance, so that the flame is generated inside the appliance firebox.
- Before the burner is started and, thereafter, at least once a year, have qualified personnel perform the following operations:

a set the burner fuel flow rate depending on the heat input of the appliance;

b set the flow rate of the combustion-supporting air to obtain a combustion efficiency level at least equal to the lower level required by the regulations in force;

c check the unit operation for proper combustion, to avoid any harmful or polluting unburnt gases in excess of the limits permitted by the regulations in force;

d make sure that control and safety devices are operating properly;

e make sure that exhaust ducts intended to discharge the products of combustion are operating properly;

f on completion of setting and adjustment operations, make sure that all mechanical locking devices of controls have been duly tightened;

g make sure that a copy of the burner use and maintenance instructions is available in the boiler room.

- In case of a burner shut-down, reser the control box by means of the RESET pushbutton. If a second shut-down takes place, call the Technical Service, **without trying to RESET further**.
- The unit shall be operated and serviced by qualified personnel only, in compliance with the regulations in force.

3) GENERAL INSTRUCTIONS DEPENDING ON FUEL USED

3a) ELECTRICAL CONNECTION

- For safety reasons the unit must be efficiently earthed and installed as required by current safety regulations.
- It is vital that all saftey requirements are met. In case of any doubt, ask for an accurate inspection of electrics by qualified personnel, since the manufacturer cannot be held liable for damages that may be caused by failure to correctly earth the equipment.
- Qualified personnel must inspect the system to make sure that it is adequate to take the maximum power used by the equipment shown on the equipment rating plate. In particular, make sure that the system cable cross section is adequate for the power absorbed by the unit.
- No adaptors, multiple outlet sockets and/or extension cables are permitted to connect the unit to the electric mains.
- An omnipolar switch shall be provided for connection to mains, as required by the current safety regulations.
- The use of any power-operated component implies observance of a few basic rules, for example:
  - do not touch the unit with wet or damp parts of the body and/or with bare feet;
  - do not pull electric cables;

- do not leave the equipment exposed to weather (rain, sun, etc.) unless expressly required to do so;
- do not allow children or inexperienced persons to use equipment;

- The unit input cable shall not be replaced by the user.

In case of damage to the cable, switch off the unit and contact qualified personnel to replace.

When the unit is out of use for some time the electric switch supplying all the power-driven components in the system (i.e. pumps, burner, etc.) should be switched off.

3b) FIRING WITH GAS, LIGHT OIL OR OTHER FUELS

GENERAL

- The burner shall be installed by qualified personnel and in compliance with regulations and provisions in force; wrong installation can cause injuries to people and animals, or damage to property, for which the manufacturer cannot be held liable.
- Before installation, it is recommended that all the fuel supply system pipes be carefully cleaned inside, to remove foreign matter that might impair the burner operation.
- Before the burner is commissioned, qualified personnel should inspect the following:

a the fuel supply system, for proper sealing;
b the fuel flow rate, to make sure that it has been set based on the firing rate required of the burner;
c the burner firing system, to make sure that it is supplied for the designed fuel type;
d the fuel supply pressure, to make sure that it is included in the range shown on the rating plate;
e the fuel supply system, to make sure that the system dimensions are adequate to the burner firing rate, and that the system is equipped with all the safety and control devices required by the regulations in force.

- When the burner is to remain idle for some time, the fuel supply tap or taps should be closed.

SPECIAL INSTRUCTIONS FOR USING GAS

Have qualified personnel inspect the installation to ensure that:

a the gas delivery line and train are in compliance with the regulations and provisions in force;
b all gas connections are tight;
c the boiler room ventilation openings are such that they ensure the air supply flow required by the current regulations, and in any case are sufficient for proper combustion.

- Do not use gas pipes to earth electrical equipment.
- Never leave the burner connected when not in use. Always shut the gas valve off.
- In case of prolonged absence of the user, the main gas delivery valve to the burner should be shut off.

Precautions if you can smell gas

a do not operate electric switches, the telephone, or any other item likely to generate sparks;
b immediately open doors and windows to create an air flow to purge the room;
c close the gas valves;
d contact qualified personnel.

- Do not obstruct the ventilation openings of the room where gas appliances are installed, to avoid dangerous conditions such as the development of toxic or explosive mixtures.

DIRECTIVES AND STANDARDS

Gas burners

European directives
-2009/142/EC (Gas Directive)
-2014/35/UE (Low Tension Directive)
-2014/30/UE (Electromagnetic compatibility Directive)
-2006/42/EC (Machinery Directive)
Harmonized standards
-UNI EN 676 (Automatic forced draught burners for gaseous fuels)
-EN 55014-1 (Electromagnetic compatibility- Requirements for house hold appliances, electric tools and similar apparatus)
-EN 60204-1:2006 (Safety of machinery – Electrical equipment of machines.)
-CEI EN 60335-1 (Specification for safety of household and similar electrical appliances);
-CEI EN 60335-2-102 (Household and similar electrical appliances. Safety. Particular requirements for gas, oil and solid-fuel burning appliances having electrical connections).
-UNI EN ISO 12100:2010 (Safety of machinery - General principles for design - Risk assessment and risk reduction);

Light oil burners

European directives
-2014/35/UE (Low Tension Directive)
-2014/30/UE (Electromagnetic compatibility Directive)
-2006/42/EC (Machinery Directive)
Harmonized standards
-UNI EN 267-2011(Automatic forced draught burners for liquid fuels)
-EN 55014-1 (Electromagnetic compatibility- Requirements for house hold appliances, electric tools and similar apparatus)
-EN 60204-1:2006 (Safety of machinery – Electrical equipment of machines.)
-CEI EN 60335-1 (Specification for safety of household and similar electrical appliances);
-CEI EN 60335-2-102 (Household and similar electrical appliances. Safety. Particular requirements for gas, oil and solid-fuel burning appliances having electrical connections).
-UNI EN ISO 12100:2010 (Safety of machinery - General principles for design - Risk assessment and risk reduction);
National Standard
-UNI 7824 (Atomizing burners of the monobloc type. Characteristics and test methods)

Heavy oil burners

European Directives
-2014/35/UE (Low Tension Directive)
-2014/30/UE (Electromagnetic compatibility Directive)
-2006/42/EC (Machinery Directive)
Harmonized standards
-UNI EN 267(Automatic forced draught burners for liquid fuels)
-EN 55014-1 (Electromagnetic compatibility- Requirements for house hold appliances, electric tools and similar apparatus)
-EN 60204-1:2006 (Safety of machinery – Electrical equipment of machines.)
-CEI EN 60335-1 (Specification for safety of household and similar electrical appliances);
-CEI EN 60335-2-102 (Household and similar electrical appliances. Safety. Particular requirements for gas, oil and solid-fuel burning appliances having electrical connections).
-UNI EN ISO 12100:2010 (Safety of machinery - General principles for design - Risk assessment and risk reduction);
Norme nazionali / National Standard
-UNI 7824 (Atomizing burners of the monobloc type. Characteristics and test methods.

Gas - Light oil burners

European Directives
-2009/142/EC (Gas Directive)
-2014/35/UE (Low Tension Directive)
-2014/30/UE (Electromagnetic compatibility Directive)
-2006/42/EC (Machinery Directive)
Harmonized standards
-UNI EN 676 (Automatic forced draught burners for gaseous fuels)
-UNI EN 267(Automatic forced draught burners for liquid fuels)
-EN 55014-1 (Electromagnetic compatibility- Requirements for house hold appliances, electric tools and similar apparatus)

-EN 60204-1:2006 (Safety of machinery – Electrical equipment of machines.)
-CEI EN 60335-1 (Specification for safety of household and similar electrical appliances);
-CEI EN 60335-2-102 (Household and similar electrical appliances. Safety. Particular requirements for gas, oil and solid-fuel burning appliances having electrical connections).
-UNI EN ISO 12100:2010 (Safety of machinery - General principles for design - Risk assessment and risk reduction);

Norme nazionali / National Standard

-UNI 7824 (Atomizing burners of the monobloc type. Characteristics and test methods.

Gas - Heavy oil burners

European directives:

-2009/142/EC (Gas Directive)
-2014/35/UE (Low Tension Directive)
-2014/30/UE (Electromagnetic compatibility Directive)
-2006/42/EC (Machinery Directive)

Harmonized standards

-UNI EN 676 (Automatic forced draught burners for gaseous fuels)
-EN 55014-1 (Electromagnetic compatibility- Requirements for house hold appliances, electric tools and similar apparatus)
-EN 60204-1:2006 (Safety of machinery – Electrical equipment of machines.)
-CEI EN 60335-1 (Specification for safety of household and similar electrical appliances);
-CEI EN 60335-2-102 (Household and similar electrical appliances. Safety. Particular requirements for gas, oil and solid-fuel burning appliances having electrical connections).
-UNI EN ISO 12100:2010 (Safety of machinery - General principles for design - Risk assessment and risk reduction);

National Standard

- UNI 7824 (Atomizing burners of the monobloc type. Characteristics and test methods.

Industrial burners

European directives

-2009/142/EC (Gas Directive)
-2014/35/UE (Low Tension Directive)
-2014/30/UE (Electromagnetic compatibility Directive)
-2006/42/EC (Machinery Directive)

Harmonized standards

-EN 55014-1 (Electromagnetic compatibility- Requirements for house hold appliances, electric tools and similar apparatus)
-EN 746-2 (Industrial thermoprocessing equipment - Part 2: Safety requirements for combustion and fuel handling systems)
-UNI EN ISO 12100:2010 (Safety of machinery - General principles for design - Risk assessment and risk reduction);
-EN 60204-1:2006 (Safety of machinery – Electrical equipment of machines.)
-EN 60335-2 (Electrical equipment of non-electric appliances for household and similar purposes. Safety requirements)

Burner data plate

For the following information, please refer to the data plate:

- burner type and burner model: must be reported in any communication with the supplier
- burner ID (serial number): must be reported in any communication with the supplier
- date of production (year and month)
- information about fuel type and network pressure

Type	--
Model	--
Year	--
S.Number	--
Output	--
Oil Flow	--
Fuel	--
Category	--
Gas Pressure	--
Viscosity	--
El.Supply	--
El.Consump.	--
Fan Motor	--
Protection	--
Drwaing n°	--
P.I.N.	--

SYMBOLS USED

WARNING! Failure to observe the warning may result in irreparable damage to the unit or damage to the environment

DANGER! Failure to observe the warning may result in serious injuries or death.

WARNING! Failure to observe the warning may result in electric shock with lethal consequences

Figures, illustrations and images used in this manual may differ in appearance from the actual product.

PART I: SPECIFICATIONS

GENERAL FEATURES

This series of industrial burners is designed for all those applications that require big-sized air fans or air-flue heat exchangers to be installed in sound-proof areas to reduce noise. They can be provided with built-in or separately-mounted control panel (console or wall-mounted).

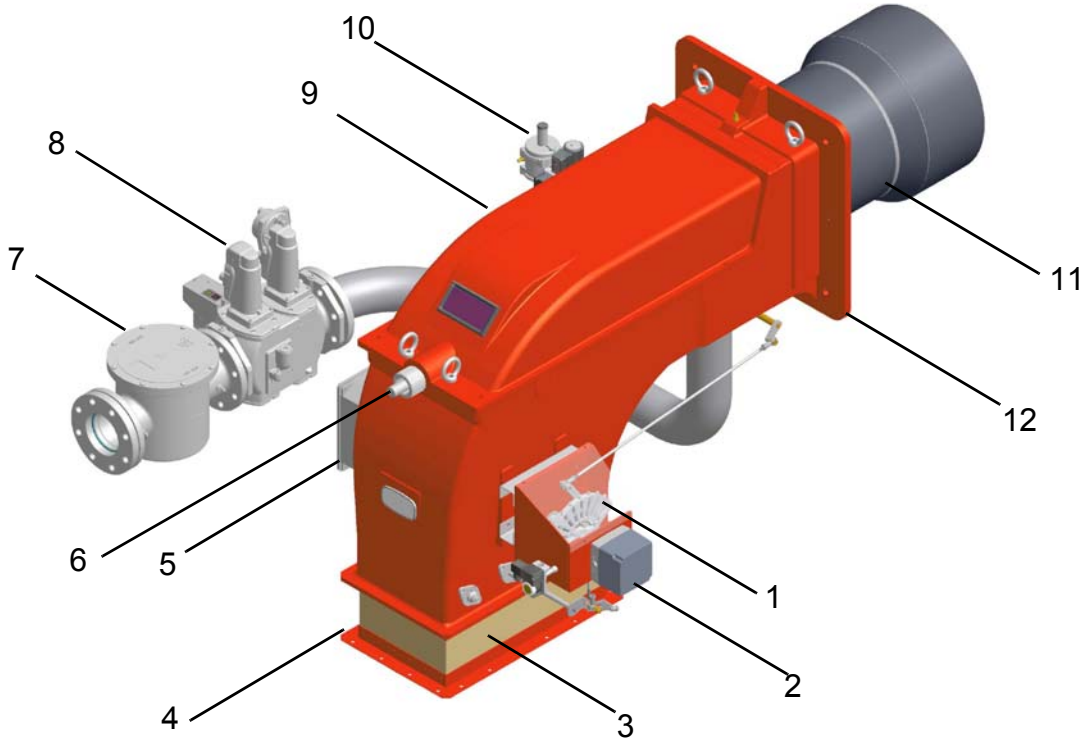

Fig. 1

1 Adjusting cam
2 Actuator
3 Bellows
4 Air inlet flange
5 Junction box
6 Combustion head adjusting screw
7 Gas filter
8 Gas valves group
9 Cover
10 Ignitor gas train
11 Combustion head-blast tube ass.y
12 Burner flange

Gas operation: the gas coming from the supply line, passes through the valves group provided with filter and stabiliser. This one forces the pressure in the utilisation limits. The actuator (2) moves proportionally the air damper and the gas butterfly valve It drives an adjusting cam (1) with variable shape. This one allows the optimisation of the gas flue values, as to get an efficient combustion.

Light oil operation:the fuel coming from the supply line, is pushed by the pump to the nozzle and then into the combustion chamber, where the mixture between fuel and air takes place and consequently the flame.

In the burners, the mixture bertween fuel and air, to perform clean and efficient combustion, is activated by atomisation of oil into very small particles. This process is achieved making pressurised oil passing through the nozzle.

The pump (8) main function is to transfer oil from the tank to the nozzle in the desired quantity and pressure. To adjust this pressure, pumps are provided with a pressure regulator (except for some models for which a separate regulating valve is provided). Other pumps are provided with two pressure regulators: one for the high and one for low pressure (in double-stage systems with one nozzle).

The adjustable combustion head can improve the burner performance. The combustion head (11) determines the energetic quality and the geometry of the flame. Fuel and comburent are routed into separated ways as far as the zone of flame generation (combustion chamber).

Example of installation

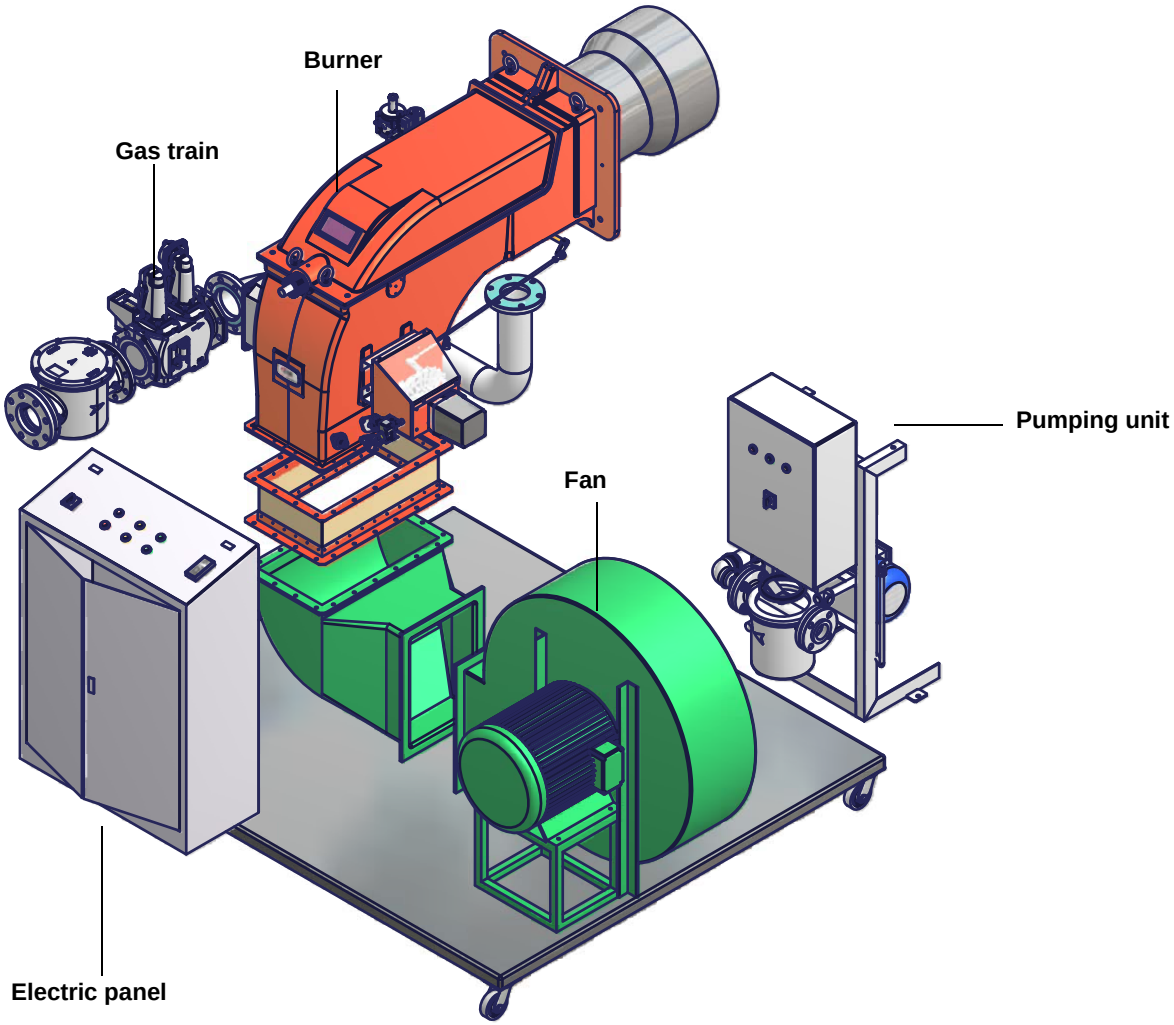

Note: the picture shows one of the possible installations. Fan, electrical panel and pumping unit can be placed according to the customer needs.

How to choose the burner

To check if the burner is suitable for the boiler to which it must be installled, the following parameters are needed:

- fuel
- furnace input, in kW or kcal/h (kW = kcal/h / 860);
- boiler type;
- combustione head type (reverse flame or three phase)'
- temperature or pressure of the thermal carrier fluid
- Comburent air temperature
- Air duct positioning
- Pressure in the combustion chamber
- Elevation (altitude) of burner installation
- Gas train (only for gas burners)
- Pumping unit (only for light-oil or heavy-oil burners)
- Air fan
- Bilt-in or separated control panel
- backpressure (data are available on the boiler's ID plate or in the user's manual).

Burners provided with built-in control panel are designed for IP40 index of protection. For other values of IP, please contact the manifacturer Technical Dpt.

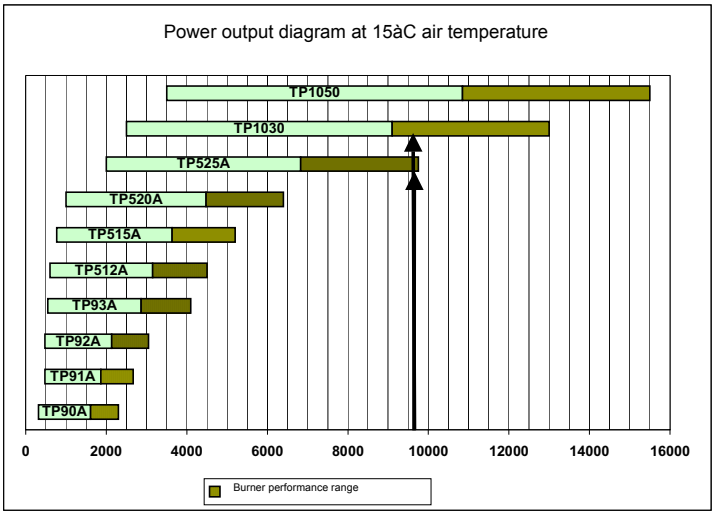

Data requested:

- furnace input;
- air temperature
- altitude
- generator pressure or temperature

Example:

- furnace input: 9600kW
- air temperature: 15°C
- altitude: 0m

Fig. 2

See the diagram in Fig. 2, as to find the burners that better suite the power range requested in the exmple (9600kW). Once the models are founded out, the choice regards technical and economical features. Technical features can be summarised in a higher modulation ratio (fewer start-ups, less consumption, fewer swigings in the generator temperature and pressure values.

BURNERS FEATURES

Burner model identification

Burners are identified by burner type and model. Burner model identification is described as follows.

Type **HTP1030** Model **M-. PR. S. *. A. 1. 80** (1) (2) (3) (4) (5) (6) (7) (8)	
(1) BURNER TYPE	**HTP1030 - HTP1050 - HTP1080**
(2) FUEL	MG - Natural gas-light oil
(3) OPERATION Available versions	PR - Progressive MD - Fully modulating
(4) BLAST TUBE	S - Standard
(5) DESTINATION COUNTRY	* - see data plate
(6) BURNER VERSION	A - StandardY - Special
(7) EQUIPMENT	1 = 2 valves + gas proving system 8 = 2 valves + gas proving system + high gas pressure switch
(8) GAS CONNECTION	80 = DN80 100 = DN100 125 = DN125

Technical specifications

BURNER TYPE		HTP1030	HTP1050	HTP1080
Output	min - max kW	2550-13300	3500-15500	4500-19000
Fuel		Natural gas-light oil		
Gas category		(see next paragraph)		
Gas rate	min.- max.(Stm^3/h)	270-1376	370-1641	476-2010
Oil Density		840 kg/m		
Oil Viscosity		2 - 7.4 cSt@ 40°C		
Light oil rate	min.-max. kg/h	215 - 1095	295 - 1306	380 - 1600
Power supply		400V 3N~ 50		
Total power consumption	kW	5.5		
Total power consumption	kW	6		
Protection		IP40		
Operation		Progressive - Fully modulating		
Gas pressure		(see Note 2)		
Gas train 80	ØValves / Connection	80 / DN80		
Gas train 100	ØValves / Connection	100 / DN100		
Gas train 125	ØValves / Connection	125 / DN125		
Weight	kg	300		
Operating temperature	°C	-10 ÷ +50		
Storage Temperature	°C	-20 ÷ +60		
Working service*		Internittent		

Note1:	**all gas flow rates are referred to Stm^3/h (1013 mbar absolute pressure, 15 °C temperature) and are valid for G20 natural gas (nett calorific value H_i = 34.02 MJ/Stm^3).**
Note2:	**Maximum gas pressure = 500mbar (with Siemens VGD gas valves).** **Minimum gas pressure = see gas curves.**

Note1:	**All gas flow rates are referred to Stm^3/h (1013 mbar absolute pressure, 15 °C temperature) and are valid for G20 gas (net calorific value H_i = 34.02 MJ/Stm^3);**
Note2:	**Maximum gas pressure = 500mbar (with Siemens VGD)** **Minimum gas pressure = see gas curves.**
Note3:	**Burners are suitable only for indoor operation with a maximum relative humidity of 80%**

***NOTE ON THE BURNER WORKING SERVICE:** for safety reasons, one controlled shutdown must be performed every 24 hours of continuous operation.

Country and usefulness gas categories

GAS CATEGORY	COUNTRY																								
I_{2H}	AT	ES	GR	SE	FI	IE	HU	IS	NO	CZ	DK	GB	IT	PT	CY	EE	LV	SI	MT	SK	BG	LT	RO	TR	CH
I_{2E}	LU	PL	-	-	-	-	-	-	-	-	-	-	-	-	-	-	-	-	-	-	-	-	-	-	-
$I_{2E(R)B}$	BE	-	-	-	-	-	-	-	-	-	-	-	-	-	-	-	-	-	-	-	-	-	-	-	-
I_{2L}	NL	-	-	-	-	-	-	-	-	-	-	-	-	-	-	-	-	-	-	-	-	-	-	-	-
I_{2ELL}	DE	-	-	-	-	-	-	-	-	-	-	-	-	-	-	-	-	-	-	-	-	-	-	-	-
I_{2Er}	FR	-	-	-	-	-	-	-	-	-	-	-	-	-	-	-	-	-	-	-	-	-	-	-	-

Overall dimensions (mm)

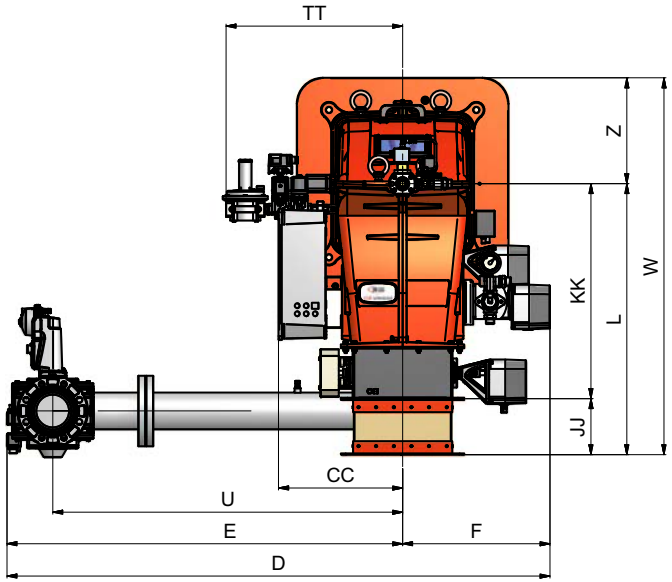

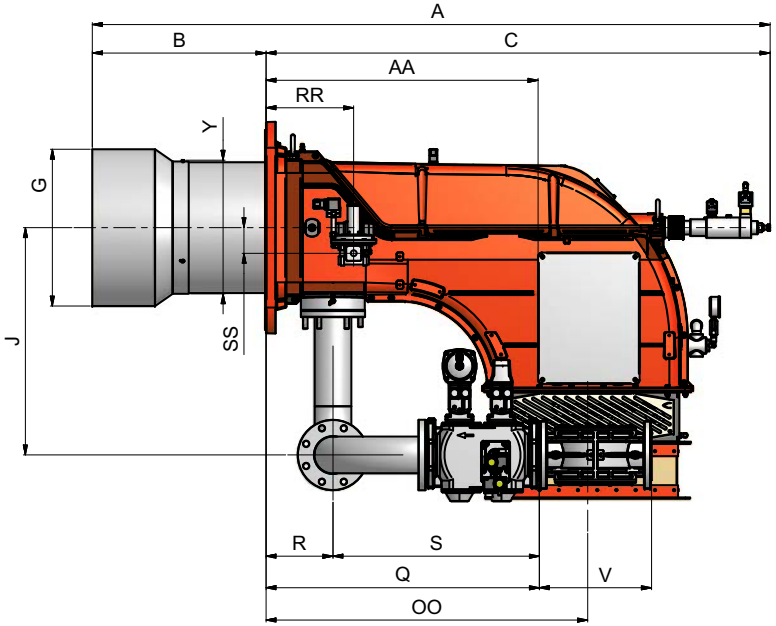

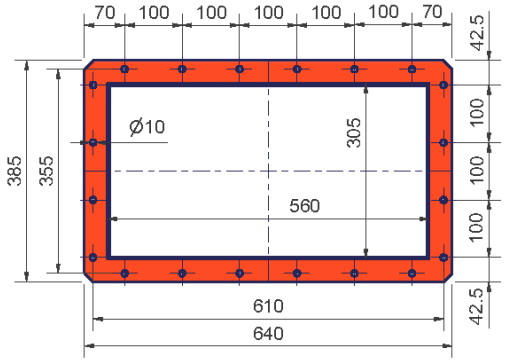

Air inlet flange

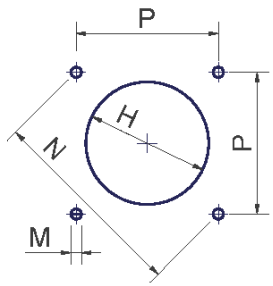

Boiler recommended drilling jig

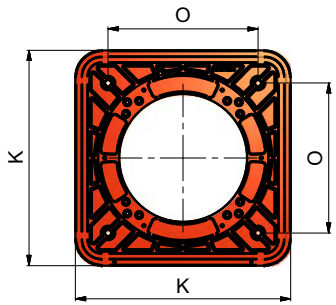

Burner flange

*DN = gas valves size

	DN*	A	AA	B	C	CC	D	E	F	G	H	J	JJ	K	KK	L	M	N	O	OO	P	Q	R	RR	S	SS	TT	U	V	W	Y	Z
HTP1030	80	2114	848	542	1572	387	1679	1219	460	464	504	710	185	671	660	845	M16	651	460	1000	460	947	209	274	736	80	551	1092	322	1175	385	330
HTP1030	100	2114	848	542	1572	387	1695	1235	460	464	504	710	185	671	660	845	M16	651	460	1000	460	853	209	274	642	80	551	1092	350	1175	385	330
HTP1050	80	2114	848	542	1572	387	1679	1219	460	489	539	710	185	671	660	845	M16	651	460	1000	460	947	209	274	736	80	551	1092	322	1175	417	330
HTP1050	100	2114	848	542	1572	387	1695	1235	460	489	539	710	185	671	660	845	M16	651	460	1000	460	853	209	274	642	80	551	1092	350	1175	417	330
HTP1080	100	2114	848	542	1572	387	1695	1235	460	514	564	710	185	671	660	845	M16	651	460	1000	460	853	209	274	642	80	551	1092	350	1175	417	330
HTP1080	125	2114	848	542	1572	387	1727	1267	460	514	564	710	185	671	660	845	M16	651	460	1000	460	965	209	274	754	80	551	1192	480	1175	417	330

Fig. 3 - 3I2MG51 v1 **Hydraulic diagram - nozzle M3**

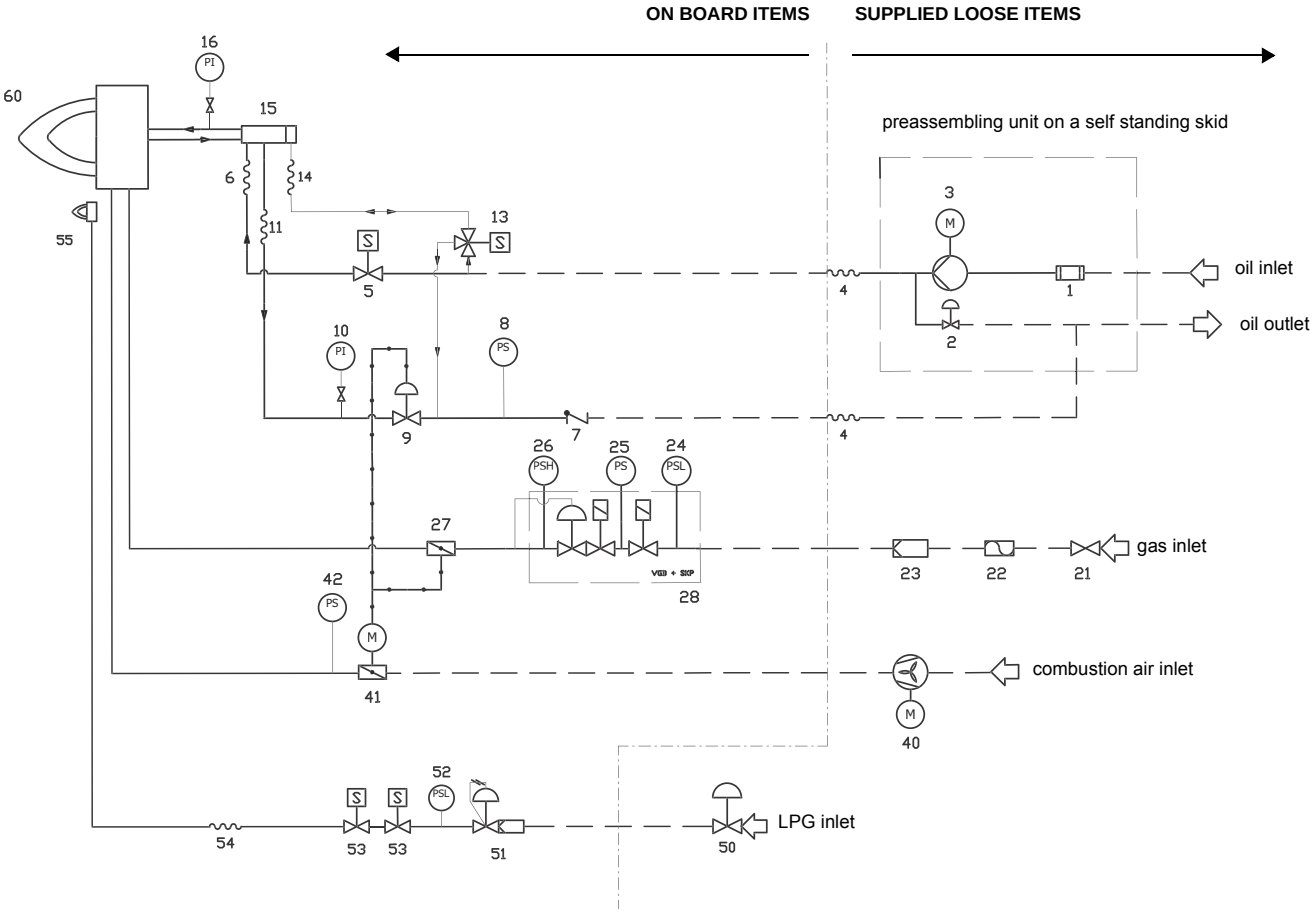

1	FILTRE
2	RÉGULATEUR DE PRESSION
3	MOTEUR ELECTRIQUE
4	TUYAUX FLEXIBLES
5	ELECTRO-VANNE
6	TUYAUX FLEXIBLES
7	SOUPAPE A UNE VOIE
8	INTERRUPTEUR DE PRESSION
9	RÉGULATEUR DE PRESSION
10	MANOMÈTRE
11	TUYAUX FLEXIBLES
13	ELECTRO-VANNE
14	TUYAUX FLEXIBLES
15	DISTRIBUTEUR HUILE
16	MANOMÈTRE
21	VANNE MANUELLE
22	JOINT ANTIVIBRATOIRE
23	FILTRE
24	PRESSOSTAT - PGMIN
25	DISPOSITIF DE CONTRÔLE D'ÉTANCHÉITÉ
26	PRESSOSTAT - PGMAX
27	VANNE PAPILLON GAZ
28	VGD + SKP
40	VENTILATEUR + MOTEUR
41	CLAPET D'AIR
42	INTERRUPTEUR DE PRESSION - PA
50	INTERRUPTEUR DE PRESSION (LPG)
51	INTERRUPTEUR DE PRESSION
52	INTERRUPTEUR DE PRESSION - PGP
53	ELECTRO-VANNE
54	TUYAUX FLEXIBLES
55	PILOT
60	BRÛLEUR

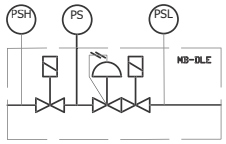

annex A

standard supply is VGD or MB-DLE valve type. See "annex A" for MB-DLE diagram.

BY OTHERS

BY BURNER CONSTRUCTOR

POS	OIL TRAIN
1	Filter
2	Pressure governor
3	Electrical motor
4	Flexible hose
5	Solenoid valve
6	Flexible hose
7	One-way valve
8	Pressure switch
9	Pressure governor

NOTE: The following items are optional: POS 40; POS 26; POS 21; POS 22; POS 16; POS 50

Fig. 4 - 3I2MG52 v0 **Hydraulic diagram - nozzle type G**

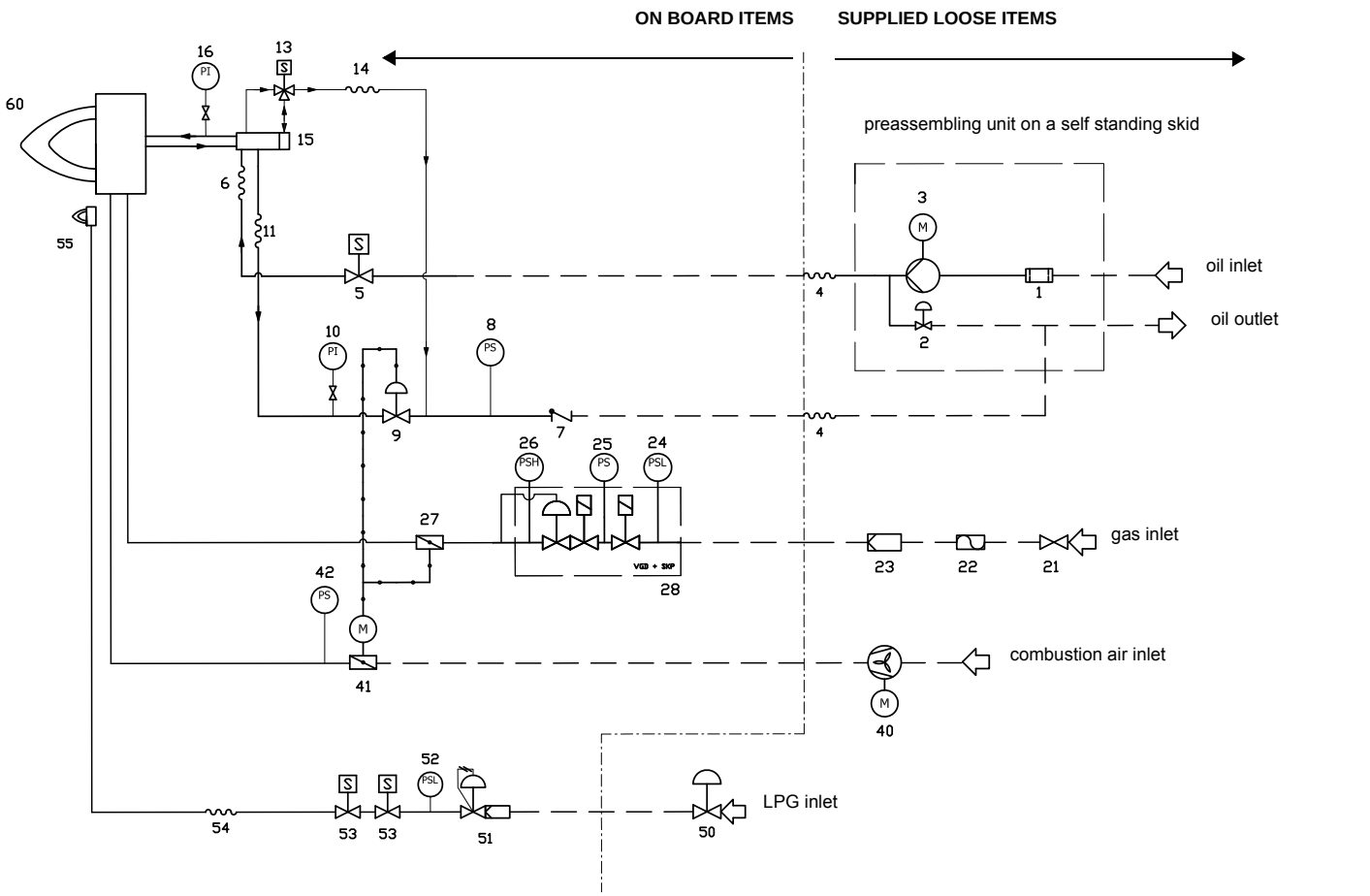

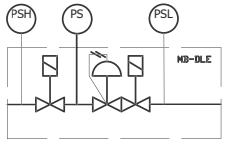

annex A

standard supply is VGD or MB-DLE valve type. See "annex A" for MB-DLE diagram.

BY OTHERS

BY BURNER CONSTRUCTOR

POS	OIL TRAIN
1	Filter
2	Pressure governor
3	Electrical motor
4	Flexible hose
5	Solenoid valve
6	Flexible hose
7	One-way valve
8	Pressure switch
9	Pressure governor
10	Pressure gauge with manual valve
11	Flexible hose
13	3-way solenoid valve
14	Flexible hose
15	Oil distributor
16	Pressure gauge with manual valve
	MAIN GAS TRAIN
21	Manual valve
22	Bellows unit
23	Filter
24	Pressure switch - PGMIN
25	Proving system
26	Pressure switch - PGMAX
27	Butterfly valve
28	Safety valve with built in gas governor
	COMBUSTION AIR TRAIN
40	Draught fan with electromotor
41	Air damper with actuator
42	Pressure switch - PA
	PILOT GAS TRAIN
50	Pressure governor for L.P.G. tank
51	Pressure governor with filter
52	Pressure switch - PGP
53	Solenoid valve
54	Flexible hose
55	Pilot burner
60	Burner

NOTE: The following items are optional: 40; 26; 21; 22; 16; 50

Performance curves

HTP1030

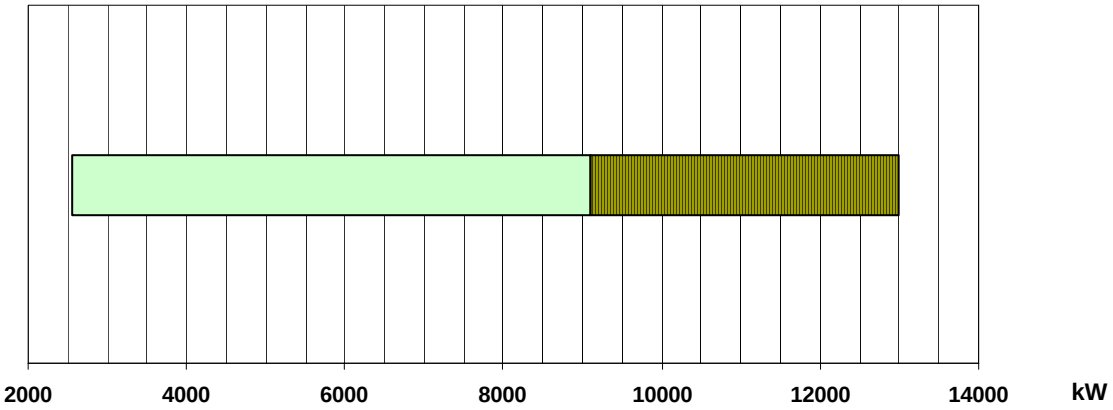

HTP1050

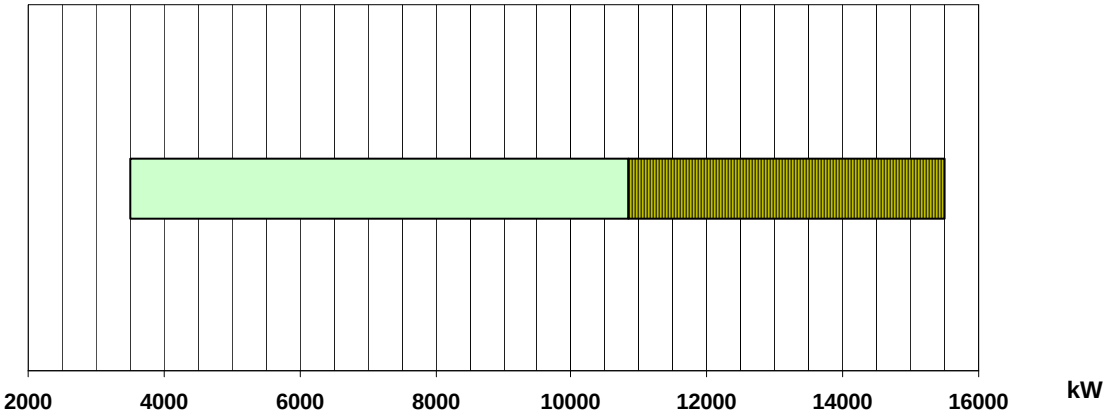

HTP1080

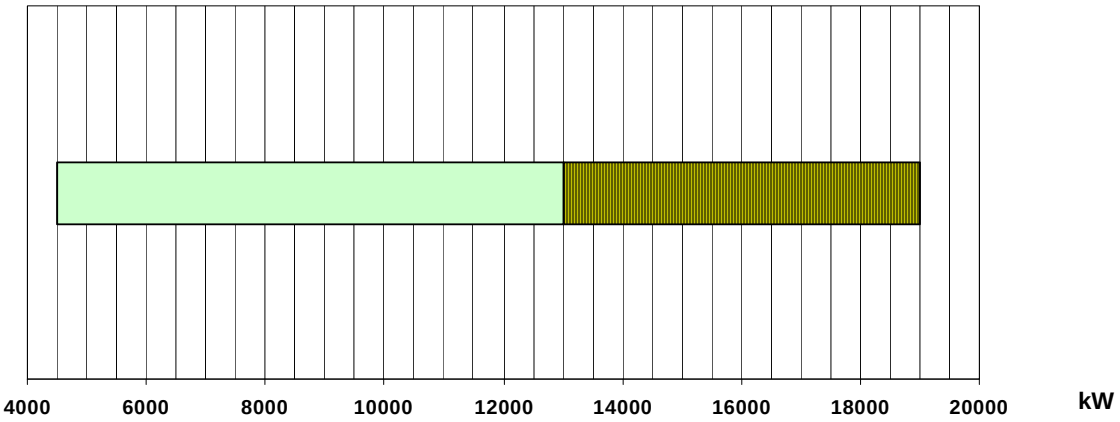

Performance range

To get the input in kcal/h, multiply value in kW by 860.
Data are referred to standard conditions: 1013mbar, 15°C.

Pressure in the network / gas rate curves

HTP1030

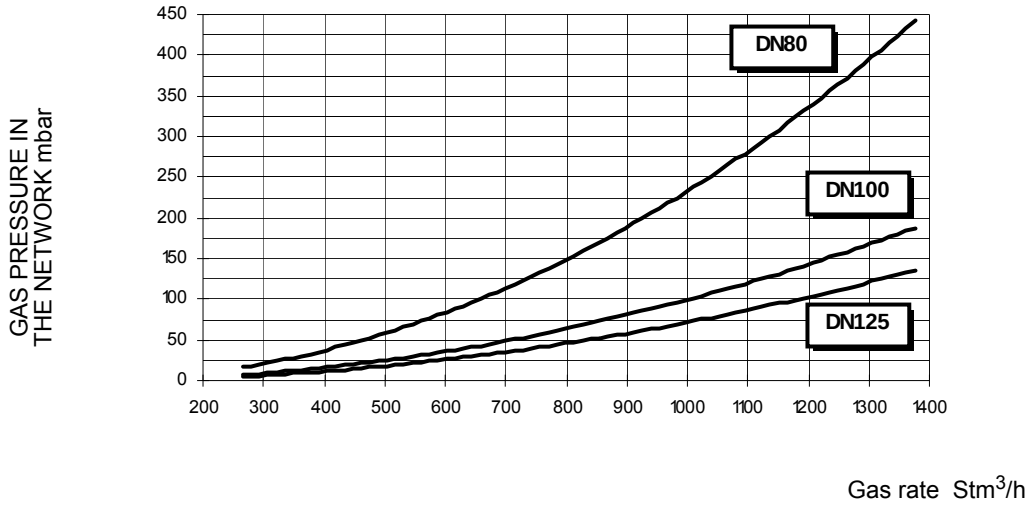

HTP1050

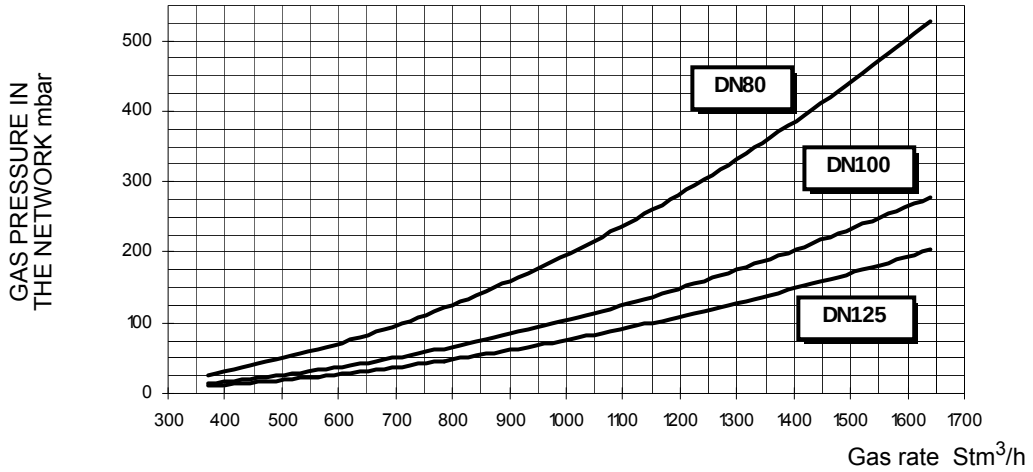

HTP1080

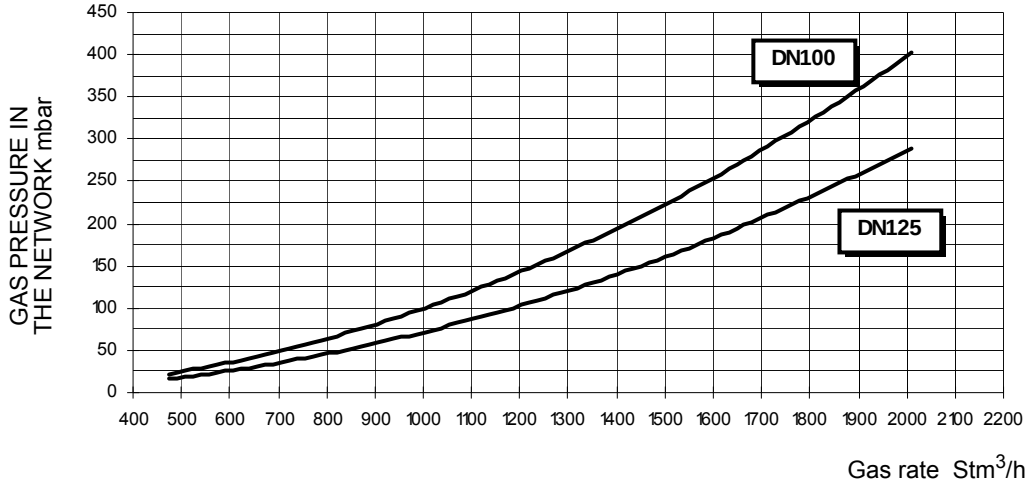

Caution: the gas rate value is quoted on the x-axis, the related network pressure is quoted on the y-axis (pressure value in the combustion chamber is not included). To know the minimum pressure at the gas train inlet, necessary to get the requested gas rate, add the pressure value in the combustion chamber to the value read on the y-axis.

PART II: INSTALLATION

MOUNTING AND CONNECTING THE BURNER

Transport and storage

ATTENTION! The equipment must be installed in compliance with the regulations in force, following the manufacturer's instructions, by qualified personnel. All handling operations must be carried out with appropriate resources and qualified personnel

ATTENTION: Use intact and correctly dimensioned hoisting equipment, conforms to the local regulations and health and safety regulations. Do not stand under lifted loads.

If the product must be stored, avoid humid and corrosive places. Observe the temperatures stated in the burner data table at the beginning of this manual.

Packing

The burners are despatched in wodden crates whose dimensions are:

HTP1030 - HTP1050: 2180 mm x 1180 mm x 1210 mm (L x P x H**)**

HTP1080: 2200 mm x 1650 mm x 1250 mm (L x P x H)

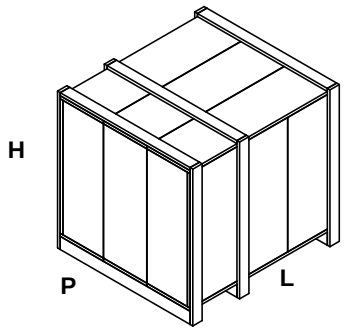

Packing cases of this type are affected by humidity and are not suitable for stacking.

In each packing case, find:

1 burner with gas train detached;
1 gasket to be inserted between the burner and the boiler;
2 flexible oil pipes;
1 oil pumping unit (*optional);
1 envelope containing this manual

To get rid of the burner's packing, follow the procedures laid down by current laws on disposal of materials.

Handling the burner

ATTENTION! Handling operations must be performed by trained personnel specialised on handling loads. If these operations are not carried out correctly, the residual risk for the machine to overturn and fall down remains.
To handle the machine, use means suitable to handle requested loads (see par. "Technical specifications").

The burner is provided with eye-bolts for lifting.

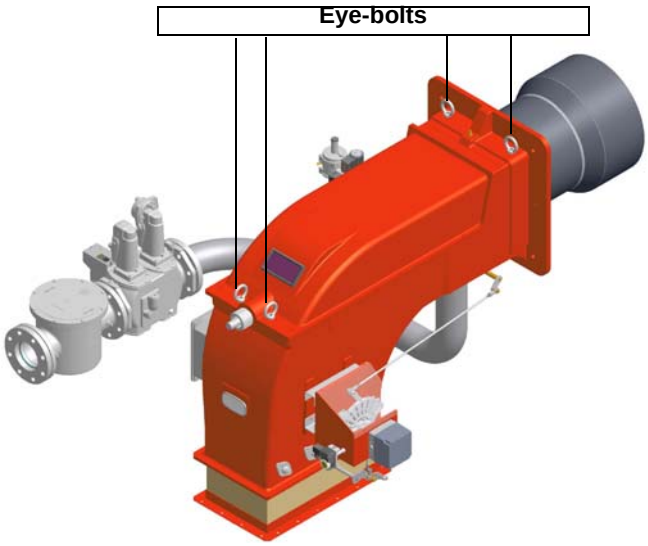

Fitting the burner to the boiler

1 To perform the installation, it is necessary to drill the boiler door as described on paragraph “Overall dimensions”;
2 screw the studbolts (5) on the boiler door, according to the drilling plate (see paragraph “Overall dimensions”);
3 move the burner towards the boiler: lift the burner by means of the eyebolts placed on its top side;
4 remove the balst tube, by loosening the three screws beside the burner flange;
5 place the the ceramic fibre plait on the burner flange;
6 replace the blast tube: before fastening completely the screws, avoid any misalignement between the blast tube axis and the combustion head axis;
7 install the burner to the boiler;
8 fix the burner to the stud bolts, by means of the fixing nuts, according to Fig. 5.
9 After fitting the burner to the boiler, ensure that the gap between the blast tube and the refractory lining is sealed with appropriate insulating material (ceramic fibre cord or refractory cement).

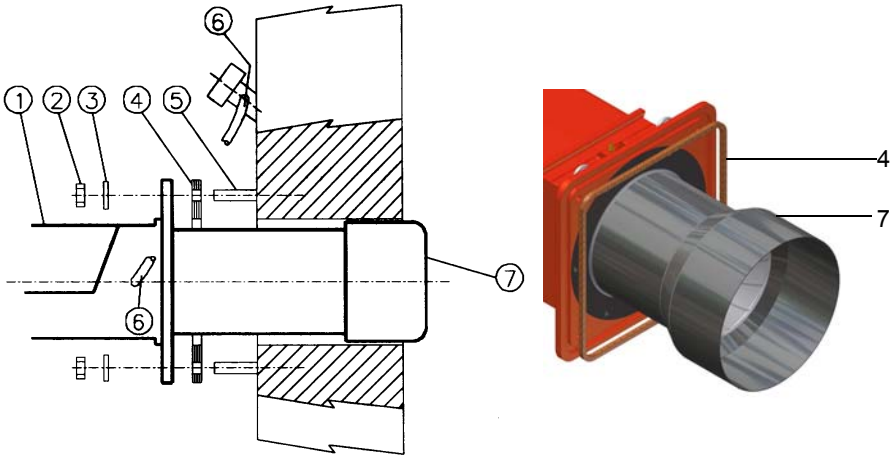

Fig. 5

Keys

1 Burner
2 Fixing nut
3 Washer
4 Ceramic fibre plait
5 Stud bolt
7 Blast tube

Fan installation

Pay attention when designing the air duct: dimensioning must be performed according to the flow rate, the temperature, the distance between the fan and the burner and according to the fan features as well.

⚠	**ATTENTION!** The bellows unit provided is made of canvas and is provided with blocking spacers to avoid breaking it during installation: **first** place the bellows unit between flanges, **then** remove the spacers. Canvas has to be stretched after the installation, but not stressed.

Matching the burner to the boiler

The burners described in this manual have been tested with combustion chambers that comply with EN676 regulation and whose dimensions are described in the diagram . In case the burner must be coupled with boilers with a combustion chamber smaller in diameter or shorter than those described in the diagram, please contact the supplier, to verify that a correct matching is possible, with respect of the application involved. To correctly match the burner to the boiler verify the type of the blast tube . Verify the necessary input and the pressure in combustion chamber are included in the burner performance curve; otherwise the choice of the burner must be revised consulting the burner manufacturer. To choose the blast tube lenght follow the instructions of the boiler manufacturer. In absence of these consider the following:

- Cast-iron boilers, three pass flue boilers (with the first pass in the rear part): the blast tube must protrude no more than **Dist** = 100 mm into the combustion chamber. (please see the picture below)
- Pressurised boilers with flame reversal: in this case the blast tube must penetrate **Dm** 50 ÷ 100 mm into combustion chamber in respect to the tube bundle plate.(please see the picture below)

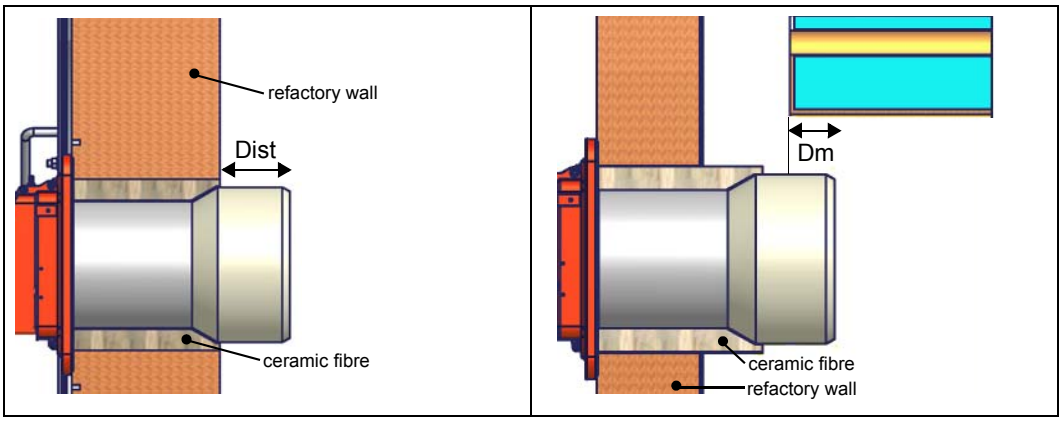

ATTENTION! Carefully seal the free space between blast tube and the refractory lining with ceramic fibre rope or other suitable means.

The length of the blast tubes does not always allow this requirement to be met, and thus it may be necessary to use a suitably-sized spacer to move the burner backwards or to design a blast tube tha suites the utilisation (please, contact the manifacturer).

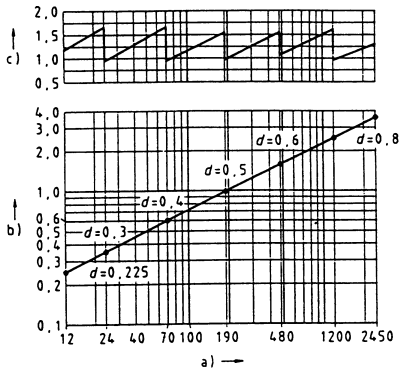

Fig. 6

Key

a) Heat output in kW

b) Lenght of the flame tube in meters

c) Flame tube firing intensity in MW/m³

d) Combustion chamber diameter (m)

Fig. 6 - Firing intensity, diameter and lenght of the test flame tube as a function of the heat input in kW.

GAS TRAIN CONNECTIONS

Referring to the P&ID of the burner, execute the connection.

ATTENTION: BEFORE EXECUTING THE CONNECTIONS TO THE GAS PIPE NETWORK, BE SURE THAT THE MANUAL CUTOFF VALVES ARE CLOSED.

The pilot gas train is already installed to the burner, the following connections must be executed:

- connection from the filter with stabiliser to the gas supply network

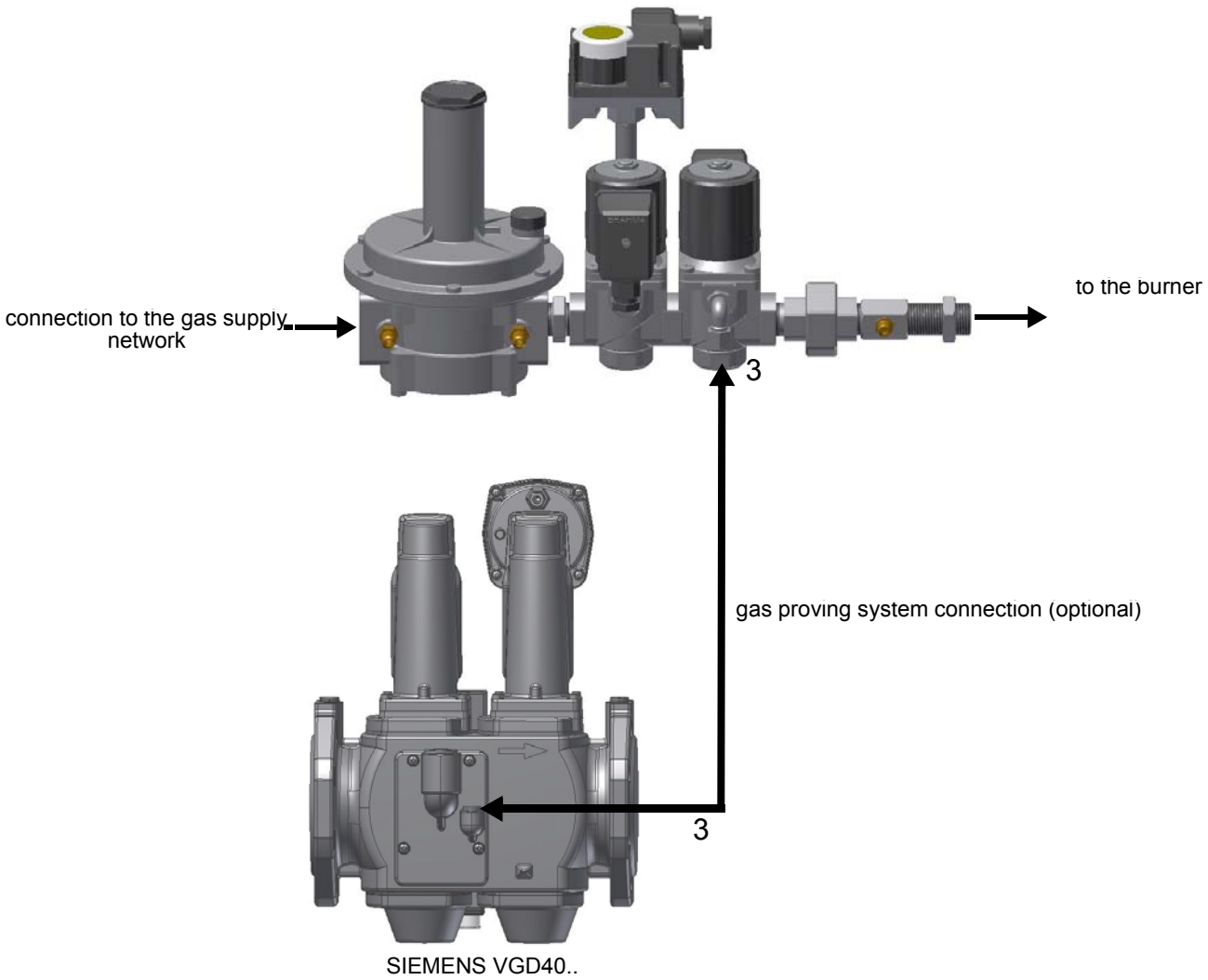

Fig. 7 - pipe port (3) for connecting the pilot gas train to the valves group of the main gas train

-

Assembling the gas grain

To assemble the main gas train, proceed as follows:

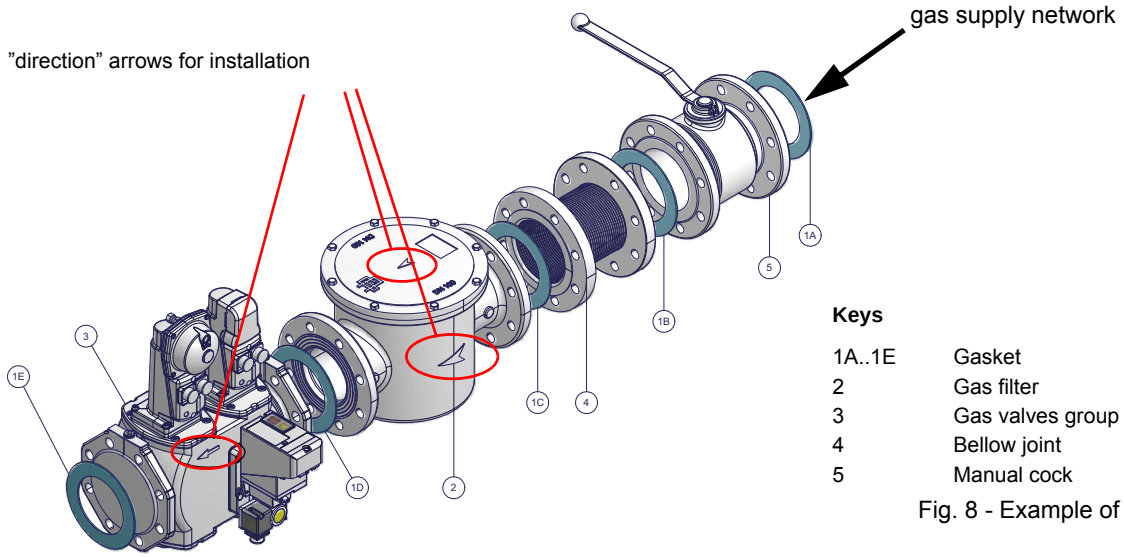

Keys

1A..1E	Gasket
2	Gas filter
3	Gas valves group
4	Bellow joint
5	Manual cock

Fig. 8 - Example of gas train

1) in case of flanged joints: place a gasket (no. 1A..1E - Fig. 8) between the elements

2) fasten all the items by means of screws, according to the shcemes showed before, obesrving the mounting direction for each item.

NOTE: the bellow joint, the manual valve and the gaskets are not part of the standard supply.

ATTENTION: once the gas train is mounted according to the diagram on Fig. 8, the gas proving test mus be performed, according to the procedure set by the laws in force.

The procedures of installation fo the gas valves are showed in the next paragraphs, according to the gas train used:

- flanged gas trains with Multibloc Dungs MBC..SE 1900-3100-5000 or Siemens VGD40.. (flanged valves group)

Siemens VGD20.. and VGD40.. gas valves - with SKP2.. (pressure governor)

Mounting

- When mounting the VGD.. double gas valve, two flanges are required (as for VGD20.. model, the flanges are threaded);
- to prevent cuttings from falling inside the valve, first fit the flanges to the piping and then clean the associated parts;
- install the valve;
- the direction of gas flow must be in accordance with the direction of the arrow on the valve body;
- ensure that the bolts on the flanges are properly tightened;
- ensure that the connections with all components are tight;
- make certain that the O-rings and gaskets between the flanges and the double gas valve are fitted.
- Connect the reference gas pipe (**TP** in figure; 8mm-external size pipe supplied loose), to the gas pressure nipples placed on the gas pipe, downstream the gas valves: gas pressure must be measured at a distance that must be at least 5 times the pipe size.

Leave the blowhole free (**SA** in figure). Should the spring fitted not permit satisfactory regulation, ask one of our service centres for a suitable replacement.

Caution: the SKP2 diaphragm D must be vertical (see Fig. 11).

WARNING: removing the four screws BS causes the device to be unserviceable!

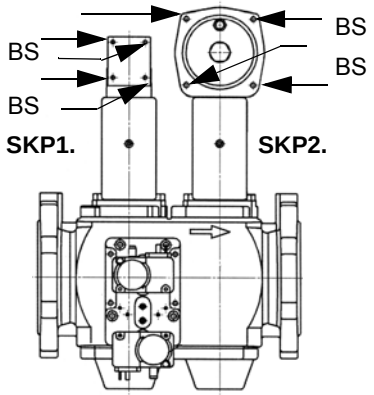

Fig. 9

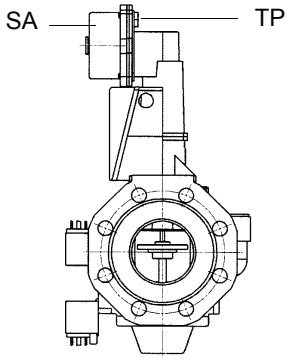

Fig. 10

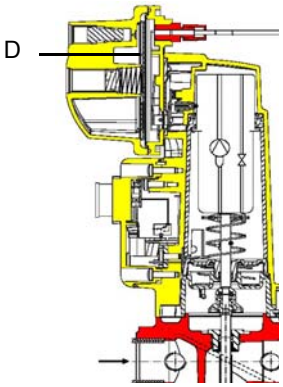

Fig. 11

SIEMENS VGD..MOUNTING POSITIONS

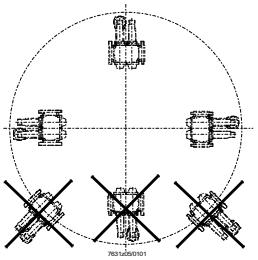

Fig. 12

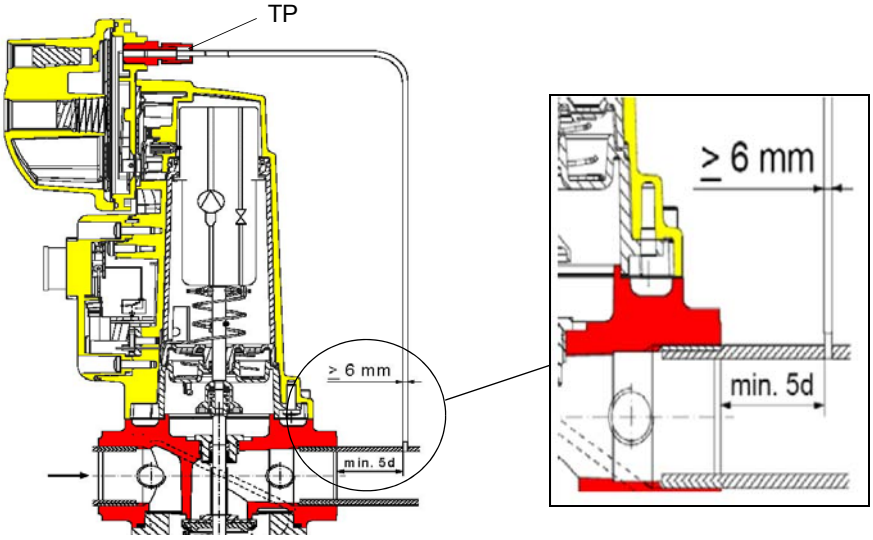

Fig. 13

Pressure adjusting range

The pressure adjusting range, downstream the gas valves group, changes according to the spring provided with the valve group.

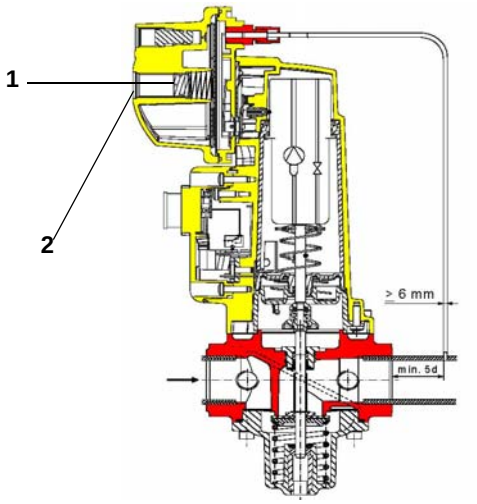

Keys
1 spring
2 cap

Siemens SKP actuator

Siemens VGD valves with SKP actuator:

Performance range (mbar)	0 - 22	15 - 120	100 - 250
Spring colour	neutral	yellow	red

Once the train is installed, electrically connect all its elements: gas valves group, pressure switches, gas proving system.

ATTENTION: once the gas train is mounted according to the diagram on Fig. 8, the gas proving test mus be performed, according to the procedure set by the laws in force.

Gas proving system

Integrated proving system (burners equipped with LME7x, LMV, LDU)

This paragraph describes the integrated proving system operation sequence:

- At the beginning both the valves (EV1 and EV2) must be closed.
- Test space evacuating: EV1 valve (burner side) opens and keep this position for a preset time (td4), in order the bring the test space to ambient pressure.Test atmospheric pressure: EV1 closes and keep this position for a preset time (test time td1). The pressure switch PGCP has not to detect a rise of pressure.
- Test space filling: EV2 opens and keep this position for a preset time (td3), in order to fill the test space.
- Test gas pressure: EV2 closes and keep this position for a preset time (td2). The pressure switch PGCP has not to detect a pressure drop down.

If all of the test phases are passed the proving system test is successful, if not a burner lockout happens.

On LMV5x and LMV2x/3x and LME73 (except LME73.831BC), the valve proving can be parameterized to take place on startup, shutdown, or both.

On LME73.831BC the valve proving is parameterized to take place on startup only.

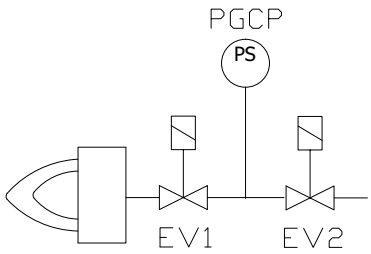

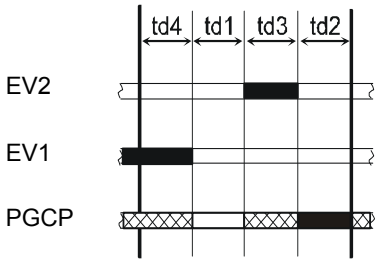

OIL TRAIN CONNECTIONS

Hydraulic diagrams for light oil supplying circuits

Fig. 14 - Gravity circuit

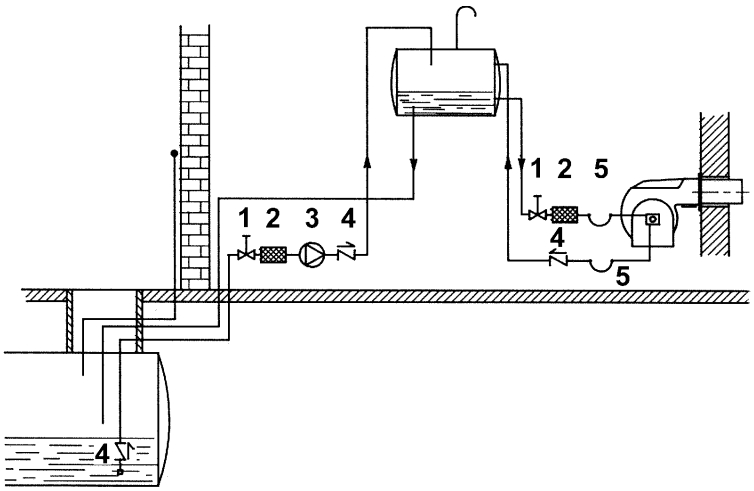

Fig. 15 - Suction circuit

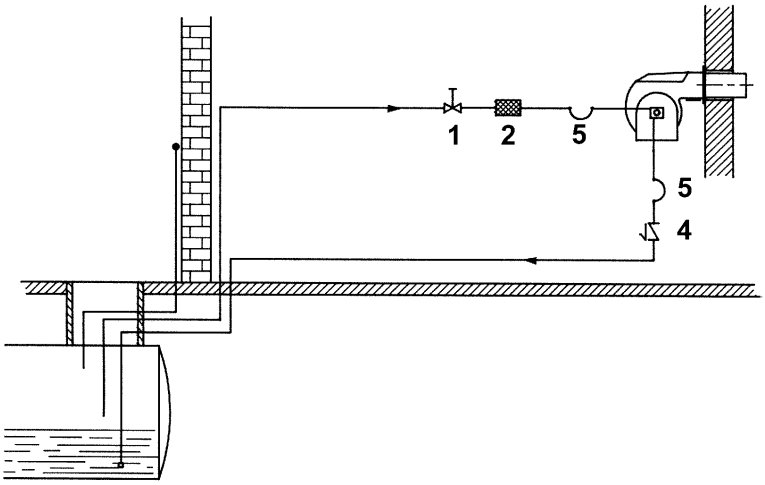

Key

1 Manual valve
2 Light oil filter
3 Light oil feeding pump
4 One way valve
5 Flexible hoses
6 Relief valve

NOTE: in plants where gravity or ring feed systems are provided, install an automatic interception device (see n. 18 - Fig. 16).

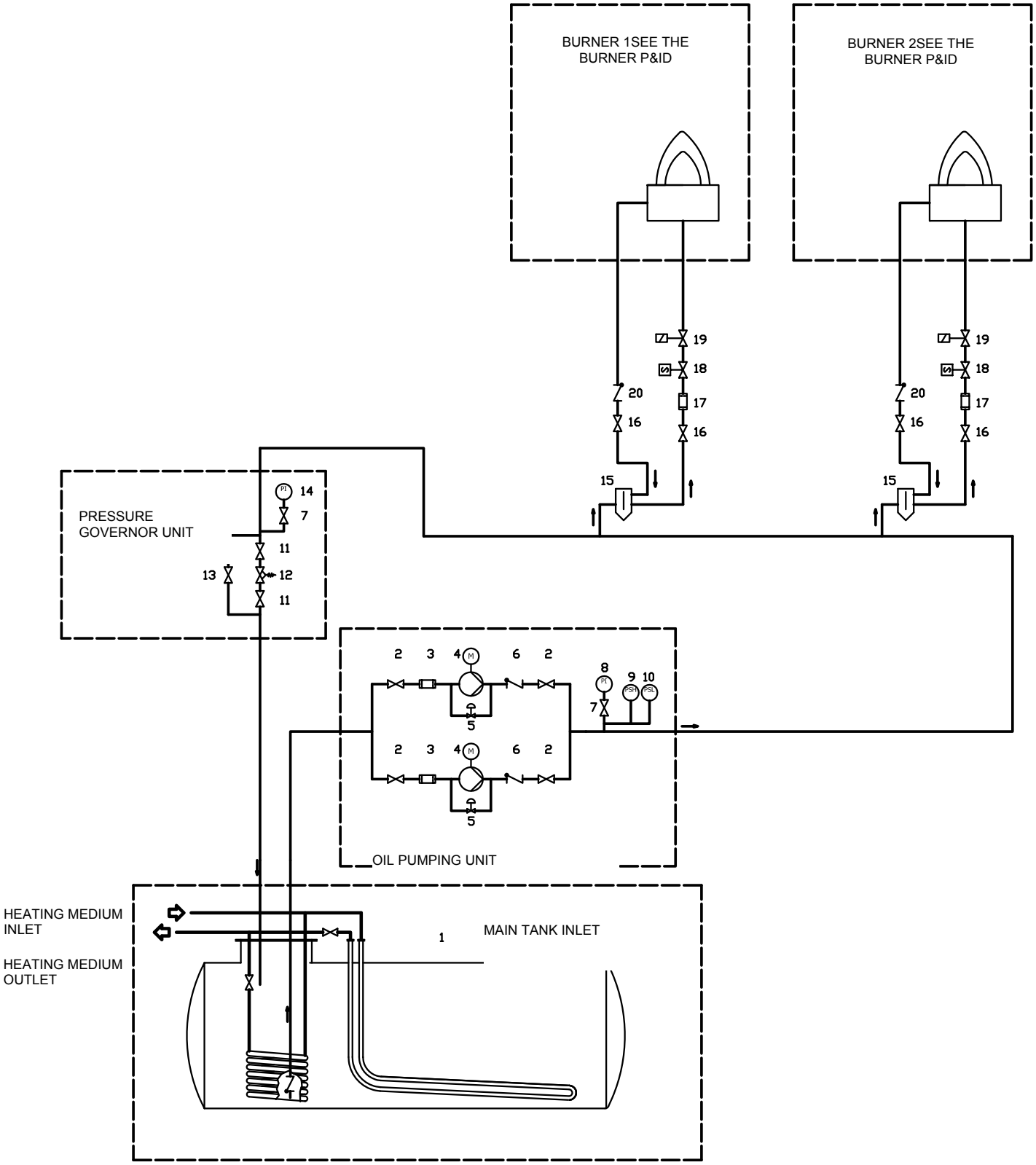

1	Main tank		**PRESSURE GOVERNOR UNIT**
	OIL PUMPING UNIT	11	Manual valve
2	Manual valve	12	Pressure governor
3	Filter	13	Needle valve
4	Pump coupled to electrical motor	14	Pressure gauge
5	Safety valve		**TO THE BURNER**
6	One-way valve	15	Degassing bottle
7	Manual valve	16	Manual valve
8	Pressure gauge	17	Filter (supplied loose with the burner)
9	Maximum pressure switch	18	Solenoide valve
10	Minimum pressure switch	19	Safety valve

Fig. 16 - 3ID0077 v1 - Ring circuit

PUMP SUNTEC T

The gear set draws oil from the tank and transfers it to an external valve that regulates the oil pressure.

Bleed

The plug of the pressure gauge port must be loosened until the air is evacuated from the system.

Note

The bypass plug **G** inserted beween high pressure and shaft seal is only intended to change the pump rotation, check the presence of this plug with a 4 mm Allen key in the pressure outlet of the pump.

Caution *: changing the direction of pump rotation involves changing all pump connections.*

Suntec T

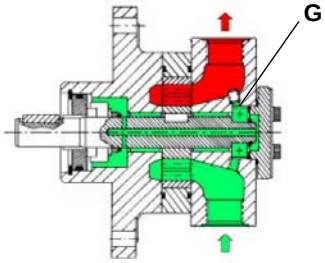

About the use of fuel pumps

- Do not use fuel with additives to avoid the possible formation over time of compounds which may deposit between the gear teeth, thus obstructing them.
- After filling the tank, wait before starting the burner. This will give any suspended impurities time to deposit on the bottom of the tank, thus avoiding the possibility that they might be sucked into the pump.
- On initial commissioning a "dry" operation is foreseen for a considerable length of time (for example, when there is a long suction line to bleed). To avoid damages inject some lubrication oil into the vacuum inlet.
- Care must be taken when installing the pump not to force the pump shaft along its axis or laterally to avoid excessive wear on the joint, noise and overloading the gears.
- Pipes should not contain air pockets. Rapid attachment joint should therefore be avoided and threaded or mechanical seal junctions preferred. Junction threads, elbow joints and couplings should be sealed with removable sg component. The number of junctions should be kept to a minimum as they are a possible source of leakage.
- Do not use PTFE tape on the suction and return line pipes to avoid the possibility that particles enter circulation. These could deposit on the pump filter or the nozzle, reducing efficiency. Always use O-Rings or mechanical seal (copper or aluminium gaskets) junctions if possible.
- An external filter should always be installed in the suction line upstream the fuel unit.

ATTENTION*: before the burner first start, it is mandatory to fill the adduction pipes with diesel fuel and bleed out residual air bubbles. Prior to switching on the burner, check direction of rotation of the pump motor by briefly pressing the starter switch; ensure there are no anomalous sounds during equipment operation, and only then turn on the burner. Neglect to comply with this requirement will invalidate the burner warranty.*

Suntec T..	
Viscosity	3 - 75 cSt
Oil temperature	0 - 150 °C
Minimum suction pressure	- 0.45 bar to prevent gasing
Maximum suction pressure	5 bar
Rated speed	3600 rpm max.

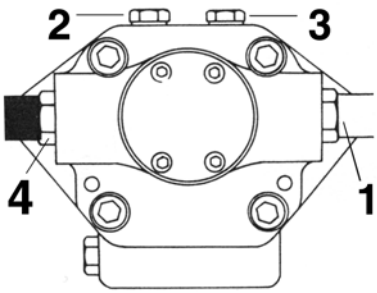

Key

1 Inlet G3/4
2 Pressure gauge port G1/4
3 Vacuum gauge port to measure the inlet vacuum G1/4
4 To pressure adjusting valve G3/4

"Note: pump with “C” rotation.

Suntec TV *Pressure governor*

Pressure adjustment

Remove cap-nut 1 and the gasket 2, unscrew the lock nut 4. To increase pressure, twist adjusting screw 3 clockwise.

To decrease the pressure, twist screw counterclockwise. Tight the lock nut 4, refit the gasket 2 and the cap nut 1.

Key

1 Cap nut
2 Gasket
3 Adjusting screw
4 Lock nut
5 Gasket

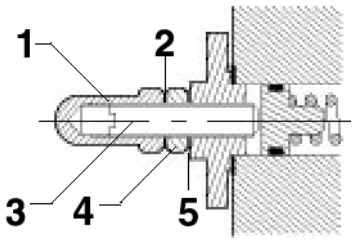

Fig. 17

Assembling the light oil flexible hoses

To connect the flexible light oil hoses to the pump, proceed as follows, according to the pump provided:

1 remove the closing nuts **A** and **D** on the inlet and return connections of the pump;

2 screw the rotating nut of the two flexible hoses on the pump **being careful to avoid exchanging the inlet and return lines**: see the arrows marked on the pump that show the inlet and the return (see prevoius paragraph).

Connecting the burner to the oil pumping unit Suntec T+TV

Follow the scheme in the picture below to connect the burner to the oil pumping unit. The pump sends the oil coming from the tank to the burner. The pressure governor makes the oil reach the nozzle at the required pressure, while the excess of oil goes back to the tank. To change the delivery pressure act on the VRM adjusting screw of the pressure governor, reading the oil pressure at the nozzle (put a pressure gauge on the oil lance manifold).

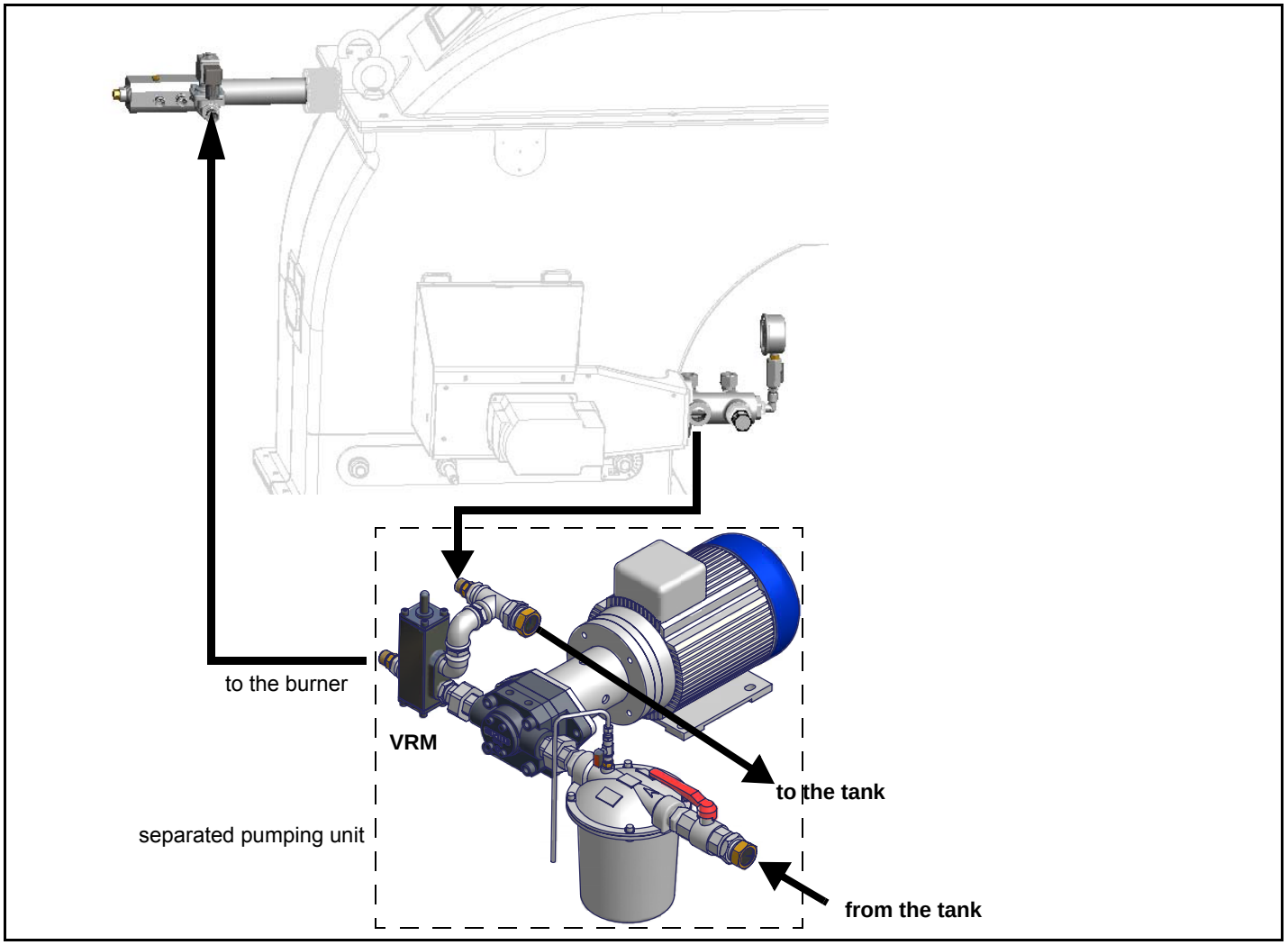

CAUTION: caps are not sealing type but used for shipment only. The flexible hoses between the pump and the burner are the ones called (on the label) “Oil high pressure flexible hose”. The flexible hose called “Oil low pressure flexible hose” is the one to be connected upstraem the oil filter.

Electrical connections

Respect the basic safety rules. make sure of the connection to the earthing system. do not reverse the phase and neutral connections. fit a differential thermal magnet switch adequate for connection to the mains.

ATTENTION: before executing the electrical connections, pay attention to turn the plant's switch to OFF and be sure that the burner's main switch is in 0 position (OFF) too. Read carefully the chapter "WARNINGS", and the "Electrical connections" section.

IMPORTANT: Connecting electrical supply wires to the burner teminal block MA, be sure that the ground wire is longer than phase and neutral ones.

To execute the electrical connections, proceed as follows:

1 remove the cover from the electrical board, unscrewing the fixing screws;
2 execute the electrical connections to the supply terminal board as shown in the attached wiring diagrams;
3 check the direction of the fan motor (see next paragraph);
4 refit the panel cover.

WARNING: (only for double stage and progressive burners) The burner is provided with an electrical bridge between terminals 6 and 7; when connecting the high/low flame thermostat, remove this bridge before connecting the thermostat.

Rotation of electric motor

Once the electrical connection of the burner is executed, remember to check the rotation of the electric motor. The motor should rotate according to the "arrow" symbol on the body. In the event of wrong rotation, reverse the three-phase supply and check again the rotation of the motor.

CAUTION: check the motor thermal cut-out adjustment

NOTE: the burners are supplied for three-phase 400V supply, and in the case of three-phase 230V supply it is necessary to modify the electrical connections into the terminal box of the electric motor and replace the overload tripped relay.

PART III: OPERATION

LIMITATIONS OF USE: PLEASE REFER TO THE CHAPTER "WARNINGS" AT THE BEGINNING OF THIS MANUAL.

***ATTENTION:* before starting the burner up, be sure that the manual cutoff valves are open and check that the pressure upstream the gas train complies the value quoted on paragraph "Technical specifications".**

- Choose the typer of fuel by turning the burner switch, on the burner control panel.
  CAUTION: if the fuel chosen is light oil, be sure the cutoff valves on the feed and return pipes are open.
- Check the control box is not locked (signalling light on); if so, reset it by means of the reset pushbutton.
- Check the series of thermostats and pressure switches turn the burner to on.

Gas operation

- Check the gas feeding pressure is sufficient (signalling lamp on).

Burners provided with gas proving system: the gas proving system test begins; when the test is performed the proving system LED turns on. At the end of the test, the burner staring cycle begins: in case of leakage in a valve, the gas proving system stops the burner and the related lamp turns on. Reset it, by means of the reset pushbutton on the burner panel.

Since the pre-purgue phase must be carried out with the maximum air rate, the control box drives the actuator opening and when the maximum opening position is achieved, the pre-purge time counting starts.

- At the end of the pre-purge time, the actuator drives the complete closing (ignition with gas position) and, as this is achieved the ignition transformer is energised; the ignitor gas valves and the main gas valves open.
- Few seconds after the valves opening, the transformer is de-energised and lamp **L** turns off.
- The burner is now operating, meanwhile the actuator goes to the high flame position and, after some seconds, the two-stage operation begins; the burner is driven automatically to high flame or low flame, according to the plant requirements.

Operation in high or low flame is signalled by the related lamp on the burner control panel.

Light oil operation

- The fan motor starts and the pre-purge phase as well. Since the pre-purge phase must be carried out at the maximum air rate, the control box drives the actuator opening and when the maximum opening position is reached, the pre-purge time counting starts.
- At the end of the pre-purge time, the actuator is in the light oil ignition position: the ignition transformer is energised (lamp on); the ignitor gas valves and the light oil valves open. Few seconds after the valves opening, the transformer is de-energised and lamp turns off.
- The burner is now operating, meanwhile the actuator goes to the high flame position; after some seconds, the two-stage operation begins; the burner is driven automatically to high flame or low flame, according to the plant requirements.

Operation in high or low flame is signalled by the related lamps on the burner control panel.

ADJUSTMENTS

ATTENTION: before starting the burner up, be sure that the manual cutoff valves are open and check that the pressure upstream the gas train complies the value quoted on paragraph "Technical specifications". Be sure that the mains switch is closed.

ATTENTION: During commissioning operations, do not let the burner operate with insufficient air flow (danger of formation of carbon monoxide); if this should happen, make the gas decrease slowly until the normal combustion values are achieved.

WARNING: EVER LOOSE THE SEALED SCREWS, OTHERWISE THE DEVICE WARRANTY WILL BE IMMEDIATELY INVALIDATE!

Combustion head gas pressure curves depending on the flow rate

The curves referred to the gas pressure in the combustion head, depending on the gas flow rate, are referred to the burner properly adjusted (percentage of residual O_2 in the flues as shown in the "Recommended combustion values" table and CO in the standard limits). During this stage, the combustion head, the gas butterfly valve and the actuator are at the maximum opening. Refer to Fig. 18, showing the correct way to measure the gas pressure, considering the values of pressure in combustion chamber, surveyed by means of the pressure gauge or taken from the boiler's Technical specifications.

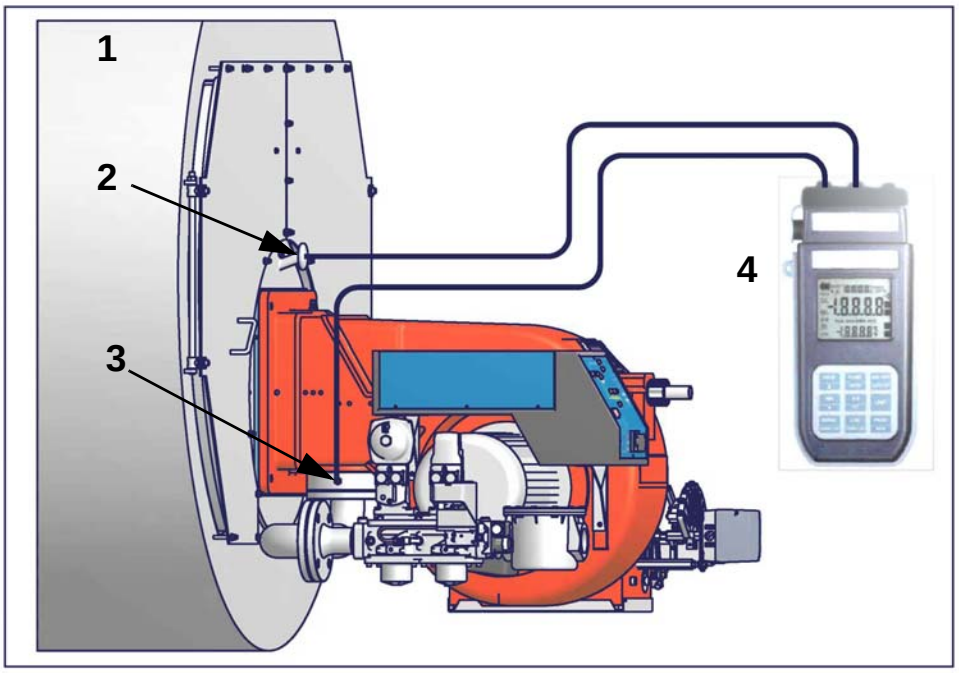

Fig. 18

Key

1 Generator
2 Pressure outlet on the combustion chamber
3 Gas pressure outlet on the butterfly valve
4 Differential pressure gauge

Measuring the gas pressure in the combustion head

In order to measure the pressure in the combustion head, insert the pressure gauge probes: one into the combustion chamber's pressure outlet to get the pressure in the combustion chamber and the other one into the butterfly valve's pressure outlet of the burner. On the basis of the measured differential pressure, it is possible to get the maximum flow rate: in the pressure - rate curves (showed on the next paragraph), it is easy to find out the burner's output in Stm^3/h (quoted on the x axis) from the pressure measured in the combustion head (quoted on the y axis). The data obtained must be considered when adjusting the gas flow rate.

ATTENTION: THE BURNED GAS RATE MUST BE READ AT THE GAS FLOW METER. WHEN IT IS NOT POSSIBLE, THE USER CAN REFERS TO THE PRESSURE-RATE CURVES AS GENERAL INFORMATION ONLY.

Pressure - rate in combustion head curves

Curves are referred to pressure = 0mbar in the combustion head!

HTP1030

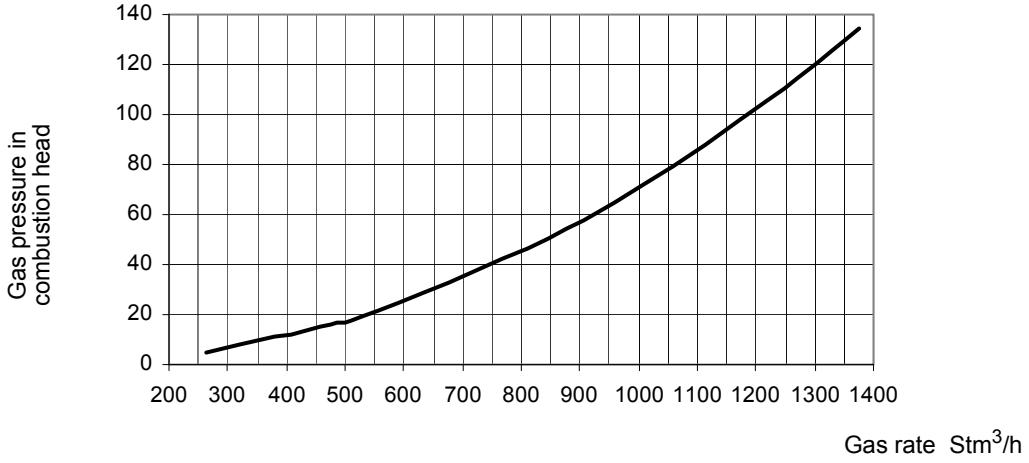

HTP1050

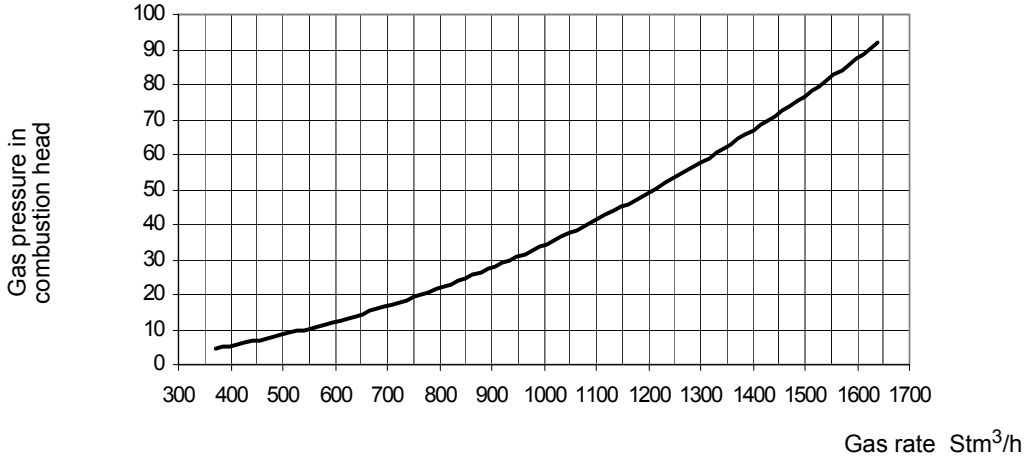

HTP1080

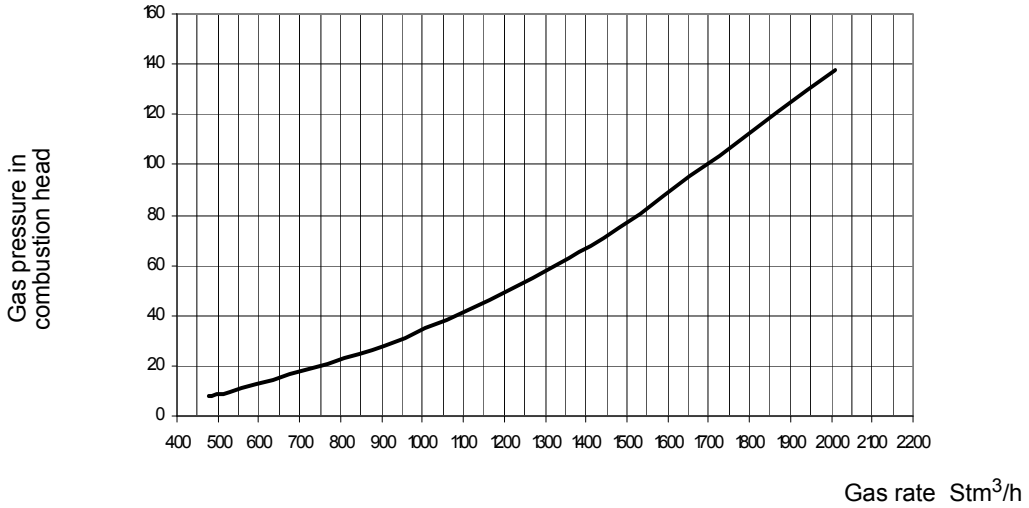

IMPORTANT! the combustion air excess must be adjusted according to the in the following chart:

Recommended combustion parameters		
Fuel	Recommended (%) CO_2	Recommended (%) O_2
Natural gas	9 ÷ 10	3 ÷ 4.8
Light oil	11.5 ÷ 13	2.9 ÷ 4.9

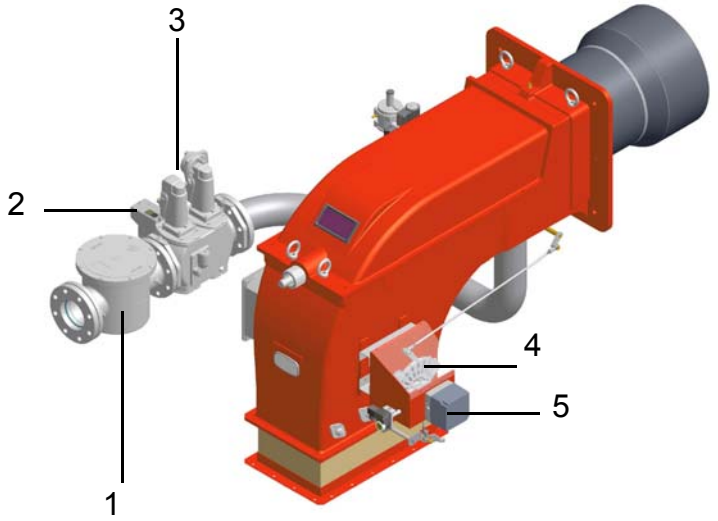

Fig. 19

Keys

1 Gas filter
2 Gas proving system
3 Gas valves
4 Adjusting cam
5 Actuator

Gas Filter

The gas filters remove the dust particles that are present in the gas, and prevent the elements at risk (e.g.: burner valves, counters and regulators) from becoming rapidly blocked. The filter is normally installed upstream from all the control and on-off devices.

ATTENTION: it is reccomended to install the filter with gas flow parallel to the floor in order to prevent dust fall on the safety valve during maintenance operation.

*Adjusting the injector gas flow rate: Brahma EG12*R valve and pressure governor*

To change the injector gas valve flow rate, proceed as follows:

1 remove the protection on the bottom of the valve, moving it counterclockwise (see next picture);
2 rotate clockwise the nut 1 as shown, to close the valve; counterclockwise to open the valve.

To perform a finest adjustment, act directly on the pressure governor as follows (see next picture):

3 remove the cap **T**: to increase theoutlet gas pressure, use a screwdriver on the screw **TR** as shown in the picture below. Screw to increase the pressure, unscrew to decrease; once the regulation is performed, replace cap **T**.

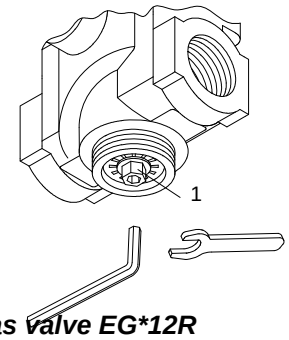

Brahma gas valve EG*12R

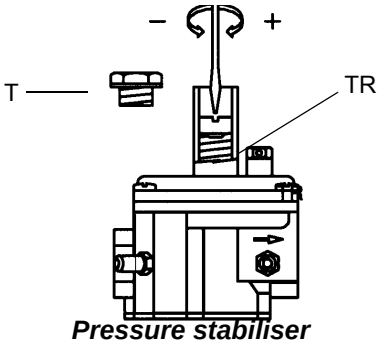

Pressure stabiliser

ADJUSTMENTS FOR GAS OPERATION

Adjust the air and gas flow rates at the maximum output ("high flame") first, by means of the air damper and the adjusting cam respectively.

- Check that the combustion parameters are in the suggested limits.
- Check the flow rate measuring it on the counter or, if it was not possible, verifying the combustion head pressure by means of a differential pressure gauge, as described on par. "Measuring the gas pressure in the combustion head" on page 29.
- Then, adjust the combustion values corresponding to the points between maximum and minimum: set the shape of the adjusting cam foil. The adjusting cam sets the air/gas ratio in those points, regulating the opening-closing of the throttle gas valve.
- Set, now, the low flame output, acting on the low flame microswitch of the actuator in order to avoid the low flame output increasing too much or that the flues temperature gets too low to cause condensation in the chimney.

Now, adjust the burner according to the actuator model provided.

Adjustment procedure

To change the burner setting during the testing in the plant, follow the next procedure.

1 Before starting the burner up, drive the high flame actuator microswitch matching the low flame one (in order to let the burner operates at the lowest output) to safely achieve the high flame stage.

2 cam IV (stroke limitation cam) must be set a little higher than the cam III to limit the output in the first seconds the flame appears;
NOTE: cam IV must shift according to cam III.

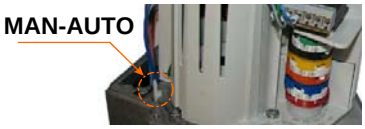

Siemens SQM40

Actuator cams (SQM40)

I	High flame
II	Stand-by
III	Low flame - gas
IV	Low flame - oil
V	Ignition - oil
VI	Ignition - gas

1 turn the burner on by selecting GAS fuel by means of the burner **CM** switch (it is placed on the burner control panel)

2 open the electrical panel to check the fan motor rotation and act directly on the related contactor (see next picture).

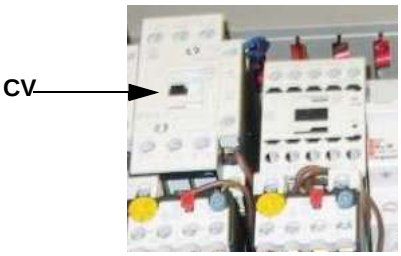

3 Before starting the burner up, drive the high flame actuator microswitch matching the low flame one (in order to let the burner operates at the lowest output) to safely achieve the high flame stage.

4 Start the burner up by means of the thermostat series and wait until the pre-purge time comes to an end and that the burner starts up;

5 drive the burner to high flame stage, by means fo the thermostat **TAB**.

6 Then move progressively the microswitch to higher values until it reaches the high flame position; always check the combustion values and eventually adjusting the gas by means of the valves group stabiliser.

7 go on adjusting air and gas flow rates: check, continuosly, the flue gas analisys, as to avoid combustion with little air; dose the air according to the gas flow rate change following the steps quoted below;

8 acting on the pressure stabiliser of the valves group, adjust the **gas flow rate in the high flame stage** as to meet the values requested by the boiler/utilisation:
- Siemens VGD valves group: remove cap **T** and act on the **VR** adjusting screw to increase or decrease the pressure and consequently the gas rate; screwind **VR** the rate increases, unscrewing it decreases (see next figure).

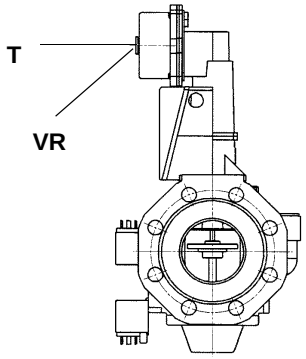

:

Siemens VGD..

9 To adjust the **air flow rate in the high flame stage**, loose the **RA** nut and screw **VRA** as to get the desired air flow rate: moving the rod **TR** towards the air damper shaft, the air damper opens and consequently the air flow rate increases, moving it far from the shaft the air damper closes and the air flow rate decreases.

Note: once the procedure is perfomed, be sure that the blocking nut **RA** is fasten. Do not change the position of the air damper rods.

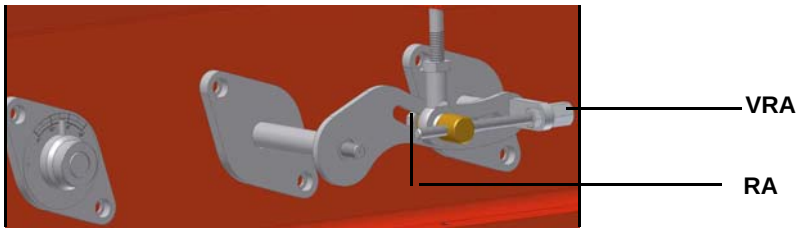

Note: once the procedure is perfomed, be sure that the blocking nut **RA** is fasten. Do not change the position of the air damper rods.

10 Only if necessary, change the combusiton head position: to let the burner operate at a lower output, loose the **VB** screw and move progressively back the combustion head towards the MIN position, by turning clockwise the **VRT** ring nut. Fasten **VB** screw when the adjustment is accomplished.

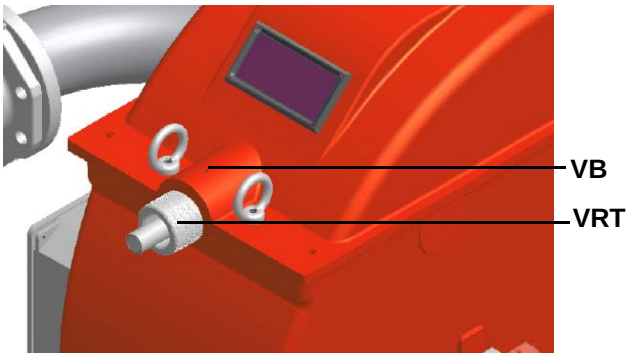

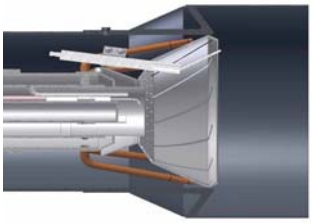

“MAX”head position

MIN head position

Attention! if it is necessary to change the head position, repeat the air and gas adjustments described above.

11 the air and gas rate are now adjusted at the maximum power stage, go on with the point to point adjustement on the **SV1** (gas side) adjusting cam as to reach the minimum output point.

12 as for the point-to-point regulation, move the gas low flame microswitch (cam III) a little lower than the maximum position (90°);

13 set the **TAB** thermostat to the minimum in order that the actuator moves progressively towards the low flame position;

14 move cam III to the minimum to move the actuator towards the low flame until the two bearings find the adjusting screw that refers to the lower position: screw **V1** to increase the rate, unscrew to decrease.

15 Move again cam III towards the minimum to meet the next screw on the adjusting cam and repeat the previous step; go on this way as to reach the desired low flame point.

16 Now adjust the pressure switches (see next paragraph).

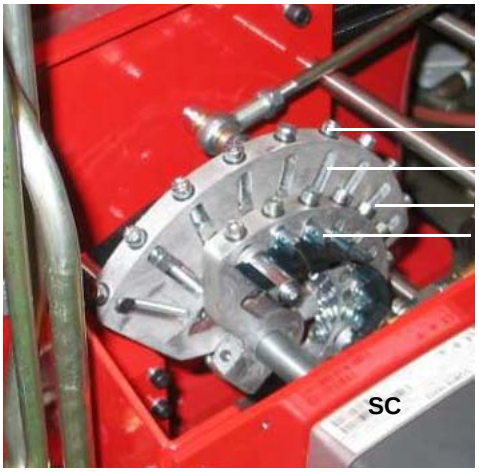

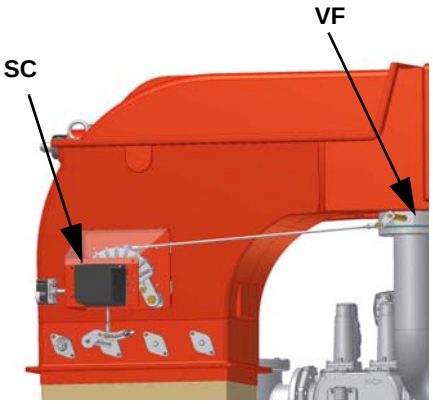

Closed butterfly valveт

Opened butterfly valve

Calibration of air pressure switch

To calibrate the air pressure switch, proceed as follows:

- Remove the transparent plastic cap.
- Once air and fuel setting have been accomplished, startup the burner.
- During the pre-purge phase o the operation, turn slowly the adjusting ring nut **VR** in the clockwise direction (to increase the adjusting pressure) until the burner lockout, then read the value on the pressure switch scale and set it to a value reduced by 15%.
- Repeat the ignition cycle of the burner and check it runs properly.
- Refit the transparent plastic cover on the pressure switch.

Calibration of low gas pressure switch

As for the gas pressure switch calibration, proceed as follows:

- Be sure that the filter is clean.
- Remove the transparent plastic cap.
- While the burner is operating at the maximum output, test the gas pressure on the pressure port of the minimum gas pressure switch.
- Slowly close the manual cutoff valve (placed upstream the pressure switch, see gas train installation diagram), until the detected pressure is reduced by 50%. Pay attention that the CO value in the flue gas does not increase: if the CO values are higher than the limits laid down by law, slowly open the cutoff valve as to get values lower than these limits.
- Check that the burner is operating correctly.
- Clockwise turn the pressure switch adjusting ring nut (as to increase the pressure value) until the burner stops.
- Slowly fully open the manual cutoff valve.
- Refit the transparent plastic cover on the pressure switch.

Adjusting the maximum gas pressure switch (when provided)

To calibrate the maximum pressure switch, proceed as follows according to its mounting position:

1 remove the pressure switch plastic cover;

2 if the maximum pressure switch is mounted upstreaam the gas valves: measure the gas pressure in the network, when flame is off; by means of the adjusting ring nut **VR**, set the value read, increased by the 30%.

3 if the maximum pressure switch is mounted downstream the “gas governor-gas valves” group and upstream the butterfly valve: light the burner, adjust it according to the procedure in the previous paragrph. Then, measure the gas pressure at the operating flow rate, downstream the “gas governor-gas valves” group and upstream the butterfly valve; by means of the adjusting ring nut **VR**, set the value read on step 2, increased by the 30%;

4 replace the plastic cover.

PGCP Gas leakage pressure switch (witn SiemensLDU/Siemens LMV burner control)

- remove the pressure switch plastic cover;
- adjust the PGCP pressure switch to the same value set for the minimum gas pressure switch;
- replace the plastic cover.;

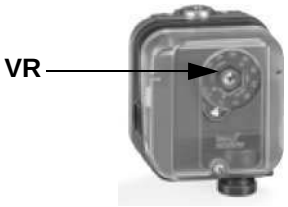

Fig. 20

Fully modulating burners

To adjust the fully-modulating burners, use the **CMF** switch on the burner control panel (see next picture), instead of the **TAB** thermostat as described on the previous paragraphs about the progressive burners. Go on adjusting the burner as described before, paying attention to use the CMF switch intead of **TAB**.

The **CMF** position sets the oprating stages: to drive the burner to the high-flame stage, set CMF=1; to drive it to the low-flame stage, set CMF=2.

To move the adjusting cam set CMF=1 or 2 and then CMF=0.

CMF = 0 stop at the current position
CMF = 1 high flame operation
CMF = 2 low flame operation
CMF = 3 automatic operation

Adjustment for light oil operation

The light oil flow rate can be adjusted choosing a by-pass nozzle that suits the boiler/utilisation output and setting the delivery and return pressure values according to the ones quoted on the chart below and the diagram on Fig. 21 (as far as reading the pressure values, see next paragraphs).

NOZZLE	DELIVERY PRESSURE bar	RETURN PRESSURE MAX. bar	RETURN PRESSURE MIN. bar
FLUIDICS WR2 / BERGONZO B / BERGONZO C	25	20	7 (recommended)

	FLOW RATE kg/h	
DIMENSIONS	**Min**	**Max**
40	13	40
50	16	50
60	20	60
70	23	70
80	26	80
90	30	90
100	33	100
115	38	115
130	43	130
145	48	145
160	53	160
180	59	180
200	66	200
225	74	225
250	82	250
275	91	275
300	99	300
330	109	330
360	119	360
400	132	400
450	148	450
500	165	500
550	181	550
600	198	600
650	214	650
700	231	700
750	250	750
800	267	800

Tab. 1

Fig. 21

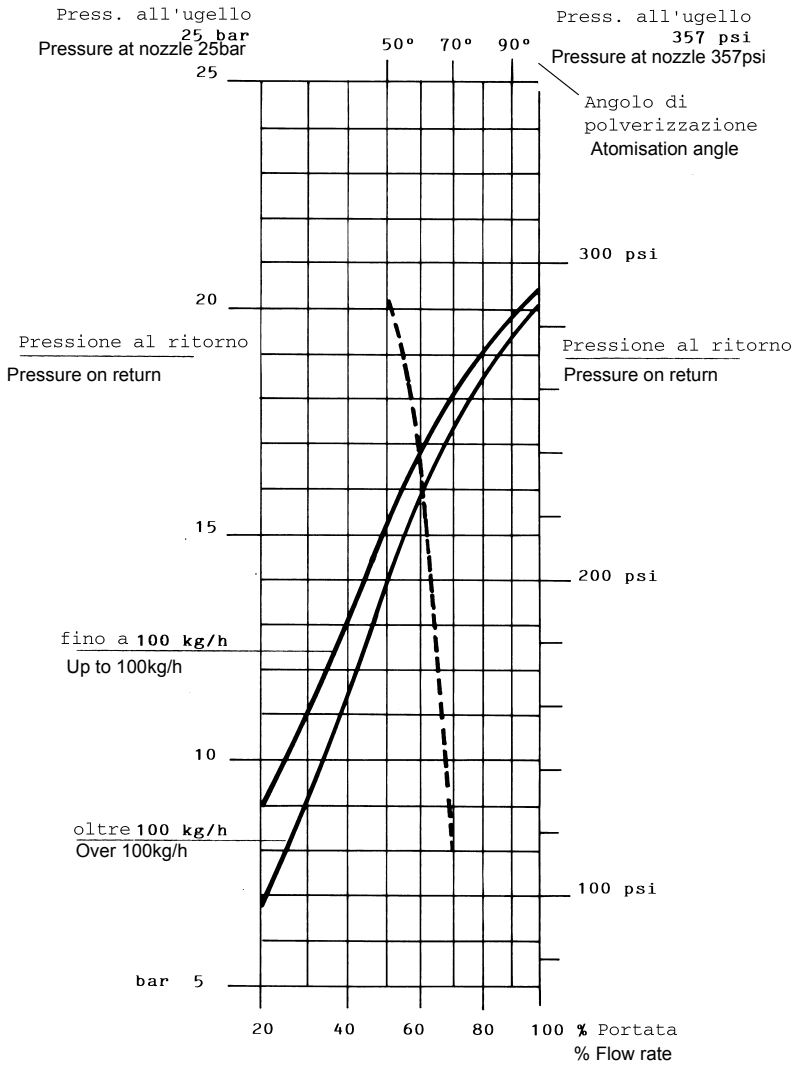

----------Atomisation angle according to the return pressure

_____ % Flow rate

Example: as for over 100kg/h nozzles, the 80% of the nozzle flow rate can be obtained with a return pressure at about 18bar (see Fig. 21Fig. 21).

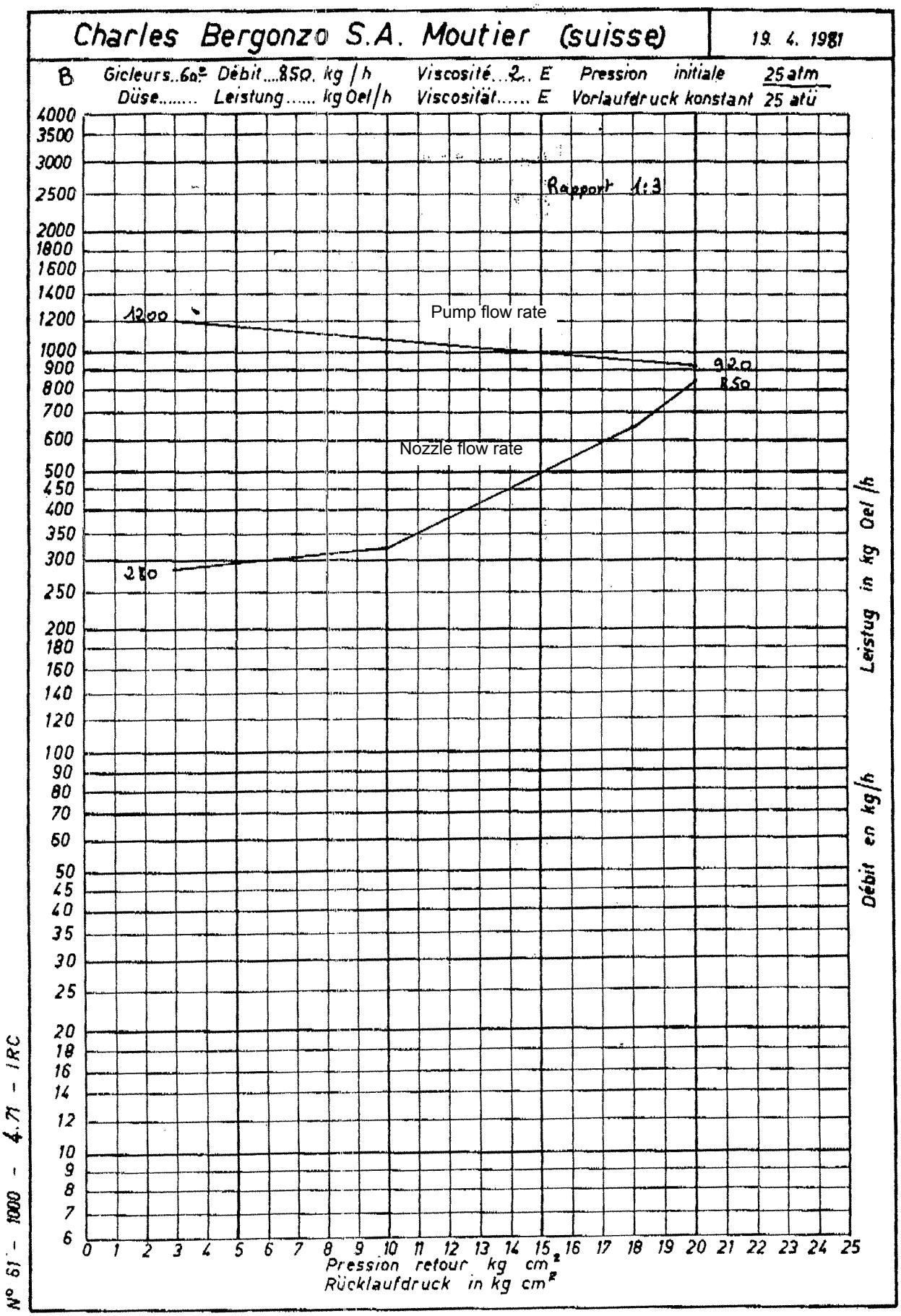

Fig. 22 - Bergonzo nozzle - example with 850kg/h nozzle

1 Once the air and gas flow rates are adjusted, turn the burner off, turn the burner on again by means of the **CM** selector to switch to the light oil operation (OIL, on the burner control panel).

2 with the electrical panel open, prime the oil pump acting directly on the related **CP** contactor (see next picture): check the pump

motor rotation and keep pressing for some seconds until the oil circuit is charged;

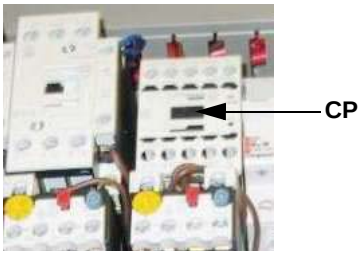

3 bleed the air from the **M** pressure gauge port (Fig. 23) by loosing the cap without removing it, then release the contactor.

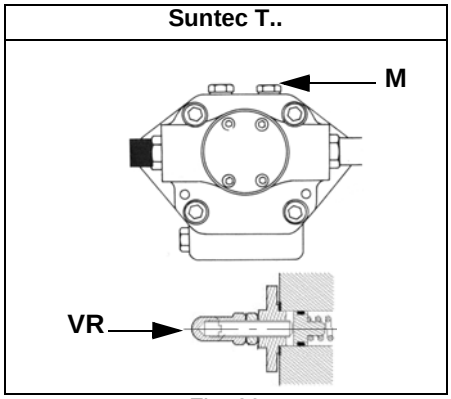

Fig. 23

4 Before starting the burner up, drive the high flame actuator microswitch matching the low flame one (in order to let the burner operates at the lowest output) to achieve safely the high flame stage .

5 record the high flame value set during the gas operation adjustments (see previous paragraphs);

6 start the burner up by means of the thermostat series and wait until the pre-purge time comes to an end and that the bruner starts up;

7 drive the burner to high flame stage, by means fo the thermostat **TAB**.

8 Then move progressively the microswitch to higher values until it reaches the high flame position; always check the combustion values and eventually adjusting the oil pressure (see next step).

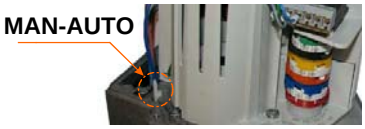

Siemens SQM40

Actuator cams (SQM40)

I	High flame
II	Stand-by
III	Low flame - gas
IV	Low flame - oil
V	Ignition - oil
VI	Ignition - gas

9 the nozzle supply pressure is already factory-set and must not be changed. Only if necessary, adjust the supply pressure as follows (see related paragraph);insert a pressure gauge into the port shown on Fig. 24 and act on on the pump adjusting screw **VR** (see Fig. 23) as to get the nozzle pressure at 25bar (according to the nozzle model provided- see page 36).

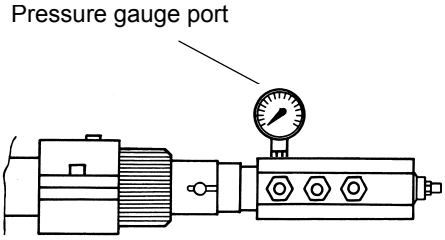

Fig. 24

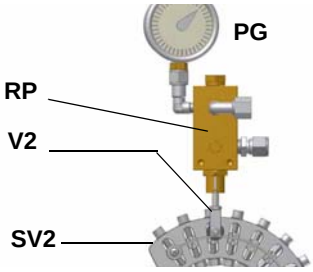

Fig. 25

10 in order to get the maximum oil flow rate, adjust the pressure (reading its value on the **PG** pressure gauge) without changing the air flow rate set during the gas operation adjustments (see previous paragraph): checking always the combustion parameters, the adjustment is to be performed by means of the **SV2** adjusting cam screw (see picture) when the cam has reached the high flame position.

11 as for the point-to-point regulation in order to set the cam foil shape, move the oil low flame microswitch (cam IV) a little lower than the maximum position (90°);

12 set the **TAB** thermostat to the minimum in order that the actuator moves progressively towards the low flame position;

13 move cam IV (oil low flame) towards the minimum to move the actuator towards the low flame until the two bearings find the adjusting screw that refers to a lower position: screw **V2** to increase the rate, unscrew to decrease, in order to get the pressure as showed on chart/diagram on “Adjustment for light oil operation” on page 36, according to the requested rate.

14 Move again cam V towards the minimum to meet the next screw on the adjusting cam and repeat the previous step; go on this way as to reach the desired low flame point.

15 The low flame position must never match the ignition position that is why cam **IV** must be set 20°- 30° more than the ignition position.

16 Set cam V (“stroke limitation cam”) 5° higher than the lowest “low flame cam” (cam III or cam IV).

17 Turn the burner off; then start it up again. If the adjustment is not correct, repeat the previous steps.

18 Replace the actuator and control panel covers.

As far as fully-modulating burners, see paragraph “Fully modulating burners” on page 35.

Maximum oil pressure switch

The oil pressure switch on the return line, checks that the pressure does not exceed a default value. This value must not be higher than the maximum acceptable pressure on the return line (this value is reported on the specification table). A pressure change on the return line could affect the combustion parameters: for this reason, the pressure switch must be set, say, at 20% over the pressure recorded during the combustion adjustment. The factory setting is 4 bar.

It is recommended to verify that the combustion parameters are within the range of acceptable values even against a pressure variation that gets close to the limit of the pressure switch.

This check should be carried out along the whole range of the burner output.

In case of inacceptable values, reduce from 20% to 15% the overpressure; later on, repeat the adjustments described above.

Minimum oil pressure switch (when provided)

The minimum oil pressure switch on the inlet line, checks that the pressure does not drop below a default value. The pressure switch must be set, say, at 10% under the pressure at the nozzle.

Oil pressure switch adjustment

Follow the below instruction, according to the pressure switch installed.

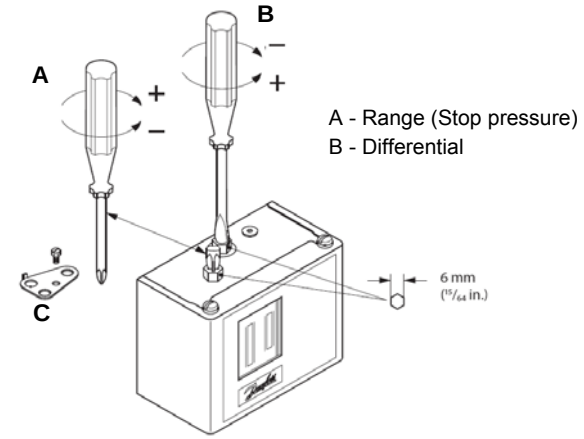 NB: Remove lockplate (C) before adjustment	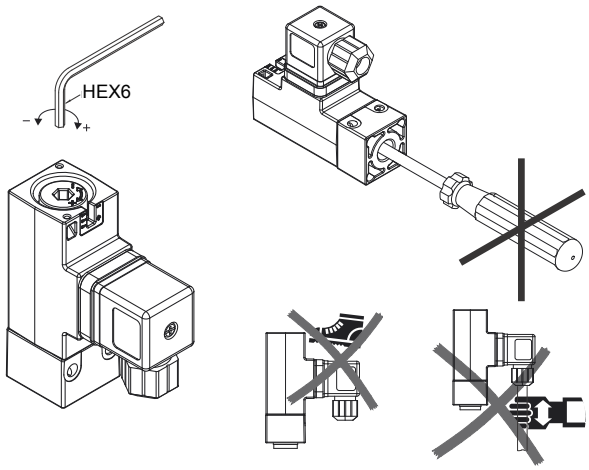
Danfoss KP..	**Trafag Picostat 9B4..**

Light oil circuitOil circuit

The fuel is pushed into the pump 1 to the nozzle 3 at the delivery pressure set by the pressure governor. The solenoid valve 2 stops the fuel immission into the combustion chamber. The fuel flow rate that is not burnt goes back to the tank through the return circuit. The spill-back nozzle is feeded at constant pressure, while the return line pressure is adjusted by means of the pressure governor controlled by an actuator coupled to an adjusting cam. The fuel amount to be burnt is adjusted by means of the burner actuator according to the adjustments set (see prevoius paragraph).

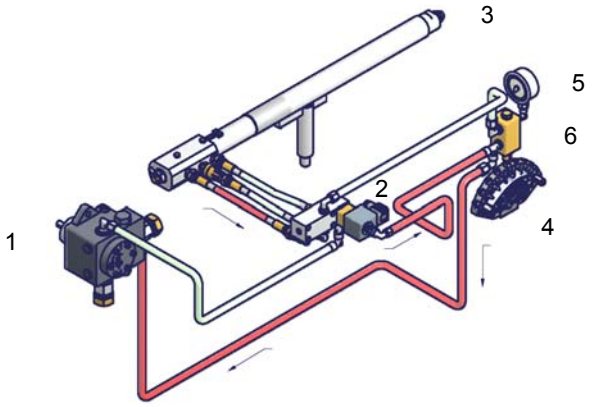

Fig. 26 - Stand-by

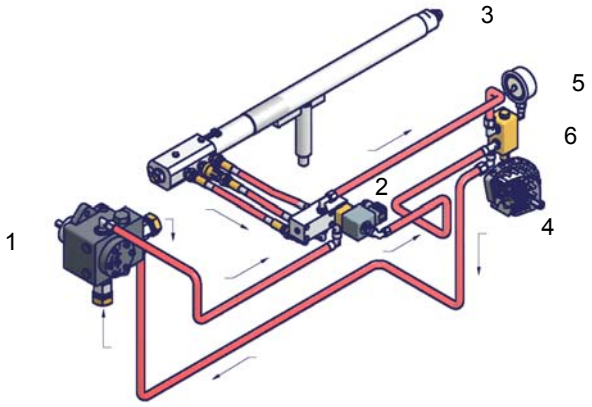

Fig. 27 - Prepurge

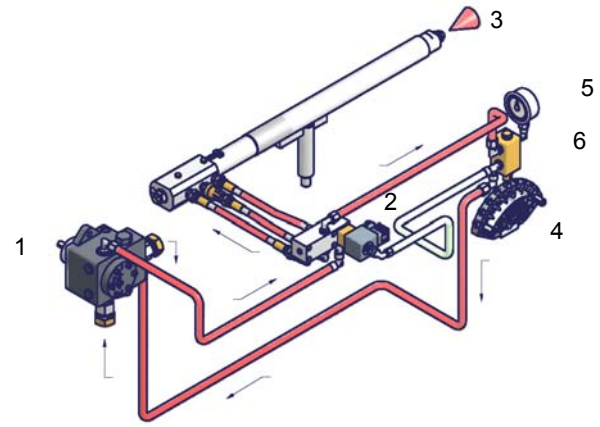

Fig. 28 - Low flame

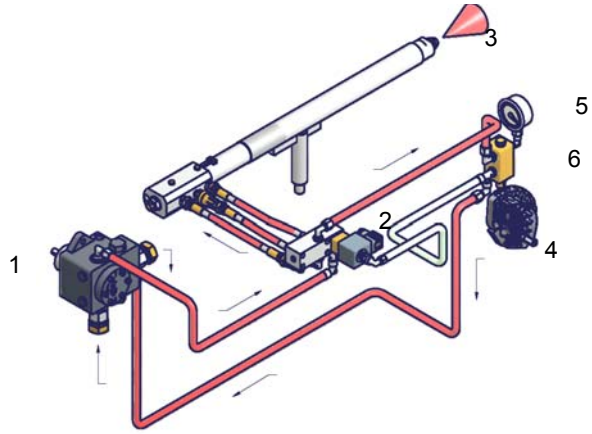

Fig. 29 - High flame

Key

1 Oil pump
2 Oil solenoid valve
3 Nozzle
4 Adjusting cam
5 Pressure gauge
6 Pressure governor

PART IV: MAINTENANCE

At least once a year carry out the maintenance operations listed below. In the case of seasonal servicing, it is recommended to carry out the maintenance at the end of each heating season; in the case of continuous operation the maintenance is carried out every 6 months.

WARNING: ALL OPERATIONS ON THE BURNER MUST BE CARRIED OUT WITH THE MAINS DISCONNECTED AND THE FUEL MANAUL CUTOFF VALVES CLOSED!

ATTENTION: READ CAREFULLY THE "WARNINGS" CHAPTER AT THE BEGINNIG OF THIS MANUAL..

ROUTINE MAINTENANCE

- Check and clean the gas filter cartridge, if necessary replace it (see next paragraghs);
- Check and clean the fuel filter cartdrige, replace if necessary.
- Check and clean the filter inside the light oil pump: filter must be thoroughly cleaned at least once in a season to ensure correct working of the fuel unit. To remove the filter, unscrew the four screws on the cover. When reassemble, make sure that the filter is mounted with the feet toward the pump body. If the gasket between cover and pump housing should be damaged, it must be replaced. An external filter should always be installed in the suction line upstream of the fuel unit.
- Check the fuel hoses for possible leaks.
- Remove, check and clean the combustion head (see page 43);
- Check ignition electrodes, clean, adjust and, if necessary, replace them (see page 45);
- Check and carefully clean the **UV** detector, replace it if necessary; if in doubt, check the detection current, once the burner starts up (see on page 45).
- Remove and clean the fuel nozzle ***(Important:* cleaning must be performed using solvent, not metal tools!*).*** At the end of maintenance operations after the burner reassembly, light the flame and check its shape, replacing the nozzle whenever a questionable flame shape appears. Whenever the burner is used intensely, we recommend preventively replacing the nozzle at the start of each heating season.
- Clean and grease sliding and rotating parts.

ATTENTION: when servicing, if it was necessary to disassemble the gas train parts, remember to execute the gas proving test, once the gas train is reassembled, according to the procedure imposed by the law in force.

Gas filter maintenance

ATTENTION: Before opening the filter, close the manual cutoff valve downstream the filter and bleed the gas; check that inside the filter there is no pressurised gas.

To clean or remove the filter, proceed as follows:

1 remove the cap unscrewing the fixing screws (A);
2 remove the filtering cartridge (B), clean it using water and soap, blow it with compressed air(or replace it, if necessary)
3 replace the cartridge in its proper position taking care to place it inbetween the guides as not to hamper the cap replacement;
4 be sure to replace the "O" ring into its place (C) and replace the cover fastening by the proper screws (A).

A

B

C

Replacing the spring in the gas valve group

To replace the spring in the gas valve group,proceed as follows:

1 Carefully twist the protection cap 1 and the O-ring 2.
2 remove the “set value” spring 3 from housing 4.
3 Replace spring 3.
4 Carefully insert the new “set value” spring. Pay attention to mount properly. First insert the spring part with smaller diameter in the housing.
5 Place O-ring 2 in protective cap 1. Screw in the protective cap with the O-ring in it.
6 Stick the adhesive label for spring identification on the type plate.

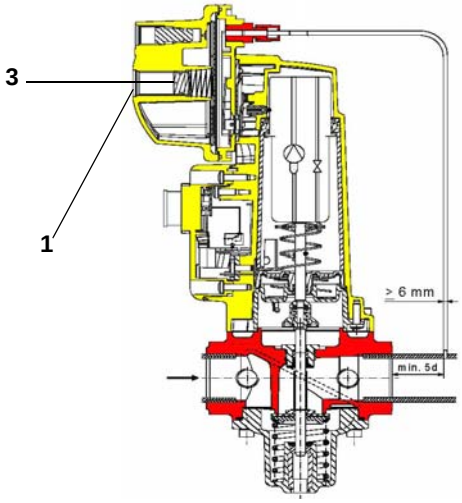

SKP Siemens actuator

Light oil filter maintenance

For correct and proper servicing, proceed as follows:

1 cutoff the required pipe section;
2 unscrew the filter cup;
3 remove the filtering cartridge, wash it with gasoline; if necessary, replace it; check the tightening O-rings and replace them if necessary;
4 replace the cup and restore the pipe line.

Removing the combustion head

1 Remove the cover **H**.
2 Slide the photoresistance out of its housing.
3 Unscrew the **V** screws that block the gas collector **G**, loosen the three joints **E** and remove the ass.y as shown on the following picture.
4 Clean the combustion head by means fo a vacuum cleaner; scrape off the scale by means fo a metallic brush.

Note: to remount the burner, floow the same procedure in the reversed order.

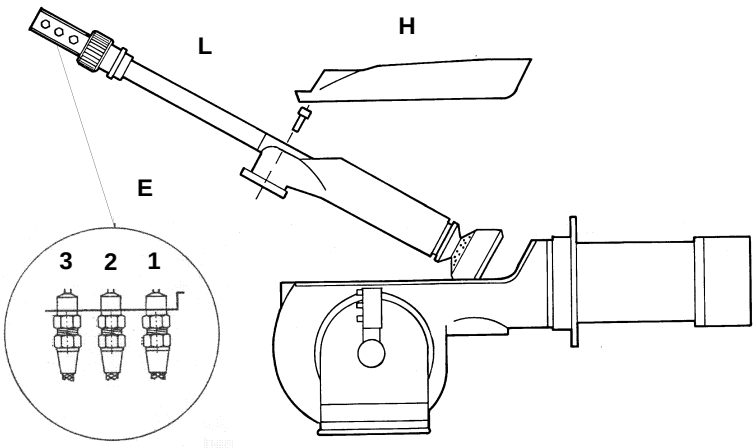

Key

1 Inlet
2 Return
3 Gun opening
E Oil piping connections
H Cover
L Oil gun

Adjusting the ignition electrode

ATTENTION: avoid the ignition electrode to contact metallic parts (blast tube, head, etc.), otherwise the boiler's operation would be compromised. Check the electrode position after any intervention on the combustion head.

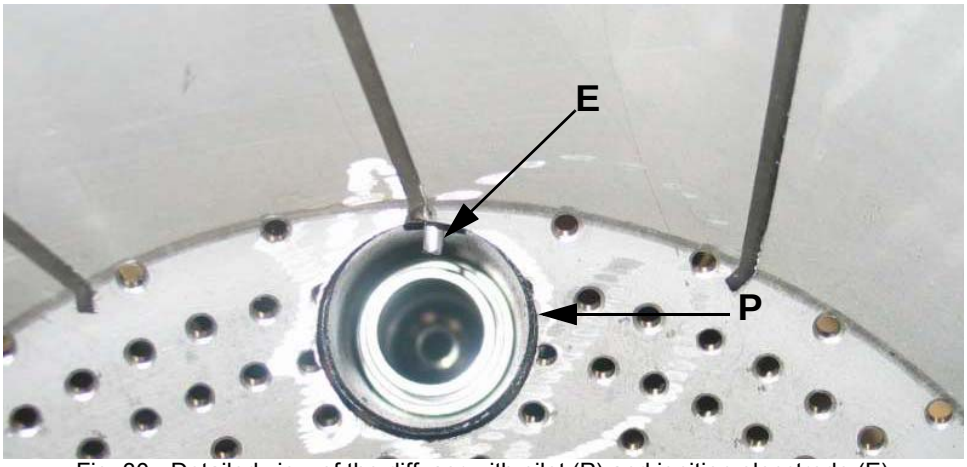

Fig. 30 - Detailed view of the diffuser with pilot (P) and ignition elecctrode (E)

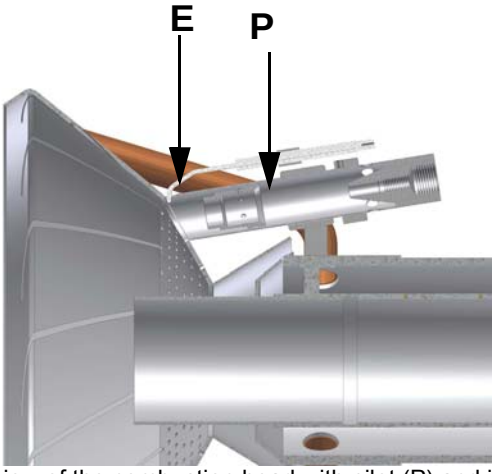

Fig. 31 - Detailed view of the combustion head with pilot (P) and ignition elecctrode (E)

Observe the values quoted on figure.

.

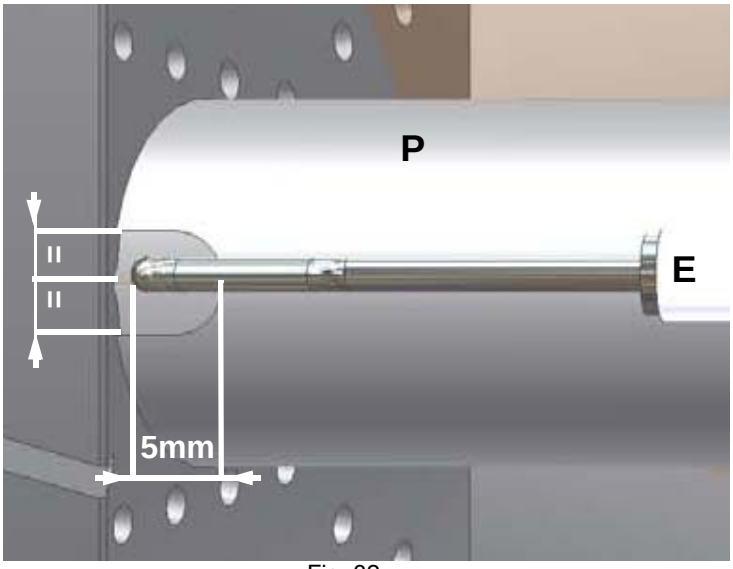

Fig. 32

Replacing the ignition electrode

⚠	***ATTENTION: avoid the ignition electrode to contact metallic parts (blast tube, head, etc.), otherwise the boiler's operation would be compromised. Check the electrode position after any intervention on the combustion head.***

To replace the ignition electrode, proceed as follows:

1 remove the burner cover
2 disconnect the electrode (E) cable (CE);
3 remove the combustion head (see par. "Removing the combustion head");
4 loose screw (B) that fasten the ignition electrode (E) to the burner pilot (P);
5 remove the electrode and replace it, referring to the values quoted on Fig. 32;

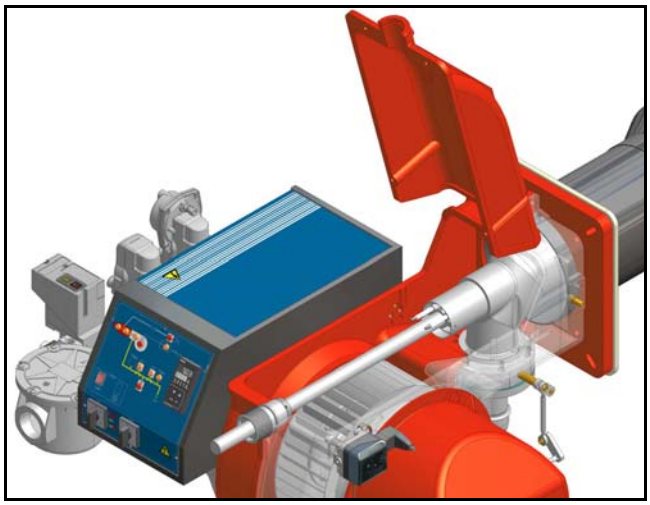

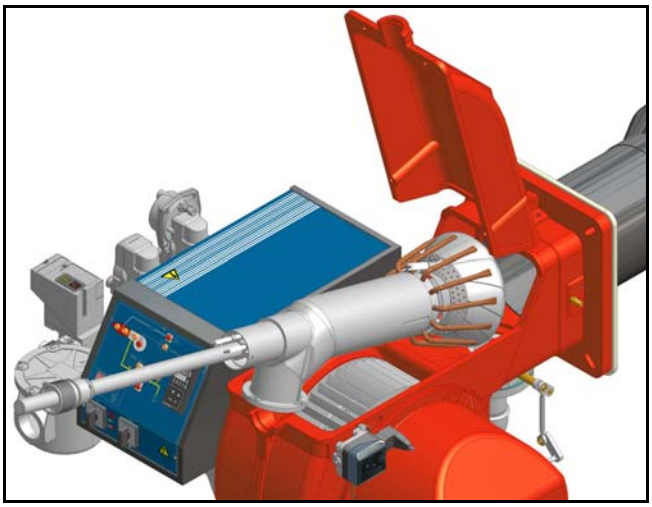

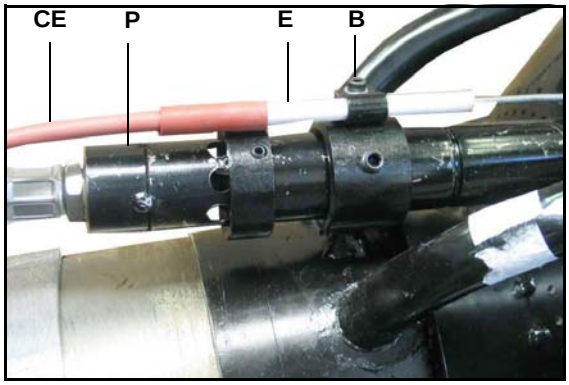

Cleaning and replacing the detection photocell

The photocell working life is about 10000 working hours (about 1 year), at max 50°C after which it must be replaced.
To clean/replace the detection photocell, proceed as follows:

1 Disconnect the system from the electrical power supply.
2 Shut off the fuel supply;
3 remove the photocell from its slot (see next figure);
4 clean the bulbe if dirty, taking care not to touch it with bare hands;
5 if necessary, replace the bulb;
6 replace the photocell into its slot.

Checking the detection current (for models without printed circuti board)

To check the detection signal follow the scheme in Fig. 33 or Fig. 34. If the signal is less than the value indicated, check the position of the detection electrode or detector, the electrical contacts and, if necessary, replace the electrode or the detector.

Control box	Minimum detection signal
Siemens LME7..	2µA (with electrode)
Siemens LME7...	70µA with UV detector)

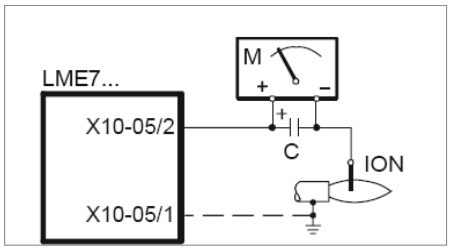

Fig. 33: Detection by electrode

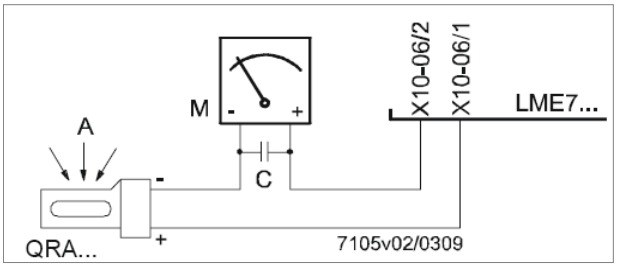

Fig. 34: Detection by photocell QRA..

Seasonal stop

To stop the burner in the seasonal stop, proceed as follows:

1 turn the burner's main switch to 0 (Off position)
2 disconnect the power mains
3 close the fuel cock of the supply line

Burner disposal

In case of disposal, follow the instructions according to the laws in force in your country about the "Disposal of materials".

WIRING DIAGRAMS

Refer to the attached wiring diagrams.

WARNING

1 - Electrical supply 400V 50Hz 3N a.c.
2 - Do not reverse phase with neutral
3 - Ensure burner is properly earthed

TROUBLESHOOTNG GUIDE - Gas operation

BURNER DOESN'T LIGHT	* No electric power supply	* Wait until power supply is back
	* Main switch open	* Close the switch
	* Thermostats open	* Check set points and thermostat connections
	* Bad thermostat set point or broken thermostat	* Set or replace the thermostat
	* No gas pressure	* Restore gas pressure
	* Safety devices (manually operated safety thermostat or pressure switch and so on) open	* Restore safety devices; wait that boiler reaches its temperature then check safety device functionality.
	* Broken fuses	* Replace fuses. Check current absorption
	* Fan thermal contacts open (only three phases)	* Reset contacts and check current absorption
	* Burner control locked out	* Reset and check its functionality
	* Burner control damaged	* Replace burner control
GAS LEAKAGE: BURNER LOCKS OUT (NO FLAME)	* Gas flow too low	* Increase the gas flow * Check gas filter cleanness * Check butterfly valve opening when burner is starting (only Hi-Low flame and progressive)
	* Ignition electrodes discharge to ground because dirty or broken	* Clean or replace electrodes
	* Bad electrodes setting	* Check electrodes position referring to instruction manual
	* Electrical ignition cables damaged	* Replace cables
	* Bad position of cables in the ignition transformer or into the electrodes	* Improve the installation
	* Ignition transformer damaged	* Replace the transformer
BURNER LOCKS OUT WITH FLAME PRESENCE	* Bad flame detector set	
	* Flame detector damaged	* Replace or adjust flame detector
	* Bad cables of flame detector	* Check cables
	* Burner control damaged	* Replace burner control
	* Phase and neutral inverted	* Adjust connections
	* Ground missing or damaged	* Check ground continuity
	* Voltage on neutral	* Take off tension on neutral
	* Too small flame (due to not much gas)	* Adjust gas flow * Check gas filter cleanness
	* Too much combustion air	* Adjust air flow rate
BURNER CONTINUES TO PERFORM PRE-PURGE	* Burner control damaged	* Replace burner control
	* Air servomotor damaged	* Replace servomotor
BURNER CONTINUES TO PERFORM ALL ITS FEATURES WITHOUT IGNITING THE BURNER	* Air pressure switch damaged or bad links	* Check air pressure switch functions and links
	* Burner control damaged	* Replace burner control
BURNER LOCKS OUT WITHOUT ANY GAS FLOW	* Gas valves don't open	* Check voltage on valves; if necessary replace valve or the burner control * Check if the gas pressure is so high that the valve cannot open
	* Gas valves completely closed	* Open valves
	* Pressure governor too closed	* Adjust the pressure governor
	* Butterfly valve too closed	* Open the butterfly valve
	* Maximum pressure switch (if installed) open.	* Check connection and functionality
	* Air pressure switch doesn't close the NO contact	* Check connections * Check pressure switch functionality
BURNER LOCKS OUT AND THE CONTROL WINDOW SHOWS A P (SIEMENS & STAEFA ONLY)	* Air pressure switch damaged (it keeps the stand-by position or badly set	* Check air pressure switch functionality * Reset air pressure switch
	* Air pressure switch connections wrong	* Check connections
	* Air fan damaged	* Replace motor
	* No power supply	* Reset power supply
	* Air damper too closed	* Adjust air damper position
BURNER LOCKS OUT DURING NORMAL RUNNING	* Flame detector circuit interrupted	* Check wiring * Check photocell
	* Burner control damaged	* Replace burner control
	* Maximum gas pressure switch damaged or badly set	* Reset pressure switch or replace it
WHEN STARTING THE BURNER OPENS FOR A WHILE THE VALVES AND THEN REPEATS FROM THE BEGINNINGTHE CYCLE FROM PRE-PURGE	* Gas pressure switch badly set	* Reset the pressure switch
	* Gas filter dirty	* Clean gas filter
	* Gas governor too low or damaged	* Reset or replace the governor
BURNER STANDS WHILE RUNNING WITHOUT ANY SWITCHING OF THERMOSTATS	* Thermal contacts of fan motor open	* Reset contacts and check values * Check current absorption
FAN MOTOR DOESN'T START	* Internal motor wiring broken	* Replace wiring or complete motor
	* Fan motor starter broken	* Replace starter
	* Fuses broken (three phases only)	* Replace fuses and check current absorption
BURNER DOESN'T SWITCH TO HIGH FLAME	* Hi-low flame thermostat badly set or damaged	* Reset or replace thermostat
	* Servomotor cam badly set	* Reset servomotor cam
SOMETIMES THE SERVOMOTOR RUNS IN THE WRONG WAY	* Servomotor capacitor damaged	* Replace capacitor

TROUBLESHOOTNG GUIDE - Light oil operation

BURNER DOESN'T LIGHT	* No electric power supply	* Wait for electric power supply is back
	* Main switch open	* Close the switch
	* Thermostats open	* Check set points and thermostat connections
	* Bad thermostat set point or broken thermostat	* Set or replace the thermostat
	* No gas pressure	* Restore gas pressure
	* Safety devices (manually operated safety thermostat or pressure switch, and so on ...) open	* Restore safety devices; wait that boiler reaches its temperature then check safety device functionality.
	* Broken fuses	* Replace fuses. Check current absorption
	* Fan thermal contacts open (only three phases)	* Reset contacts and check current absorption
	* Burner control locked out	* Reset and check its functionality
	* Burner control damaged	* Replace burner control
BURNER LOCKS OUT WITH FLAME PRESENCE	* Flame detector dirty or damaged	* Clean or replace flame detector
	* Burner control damaged	* Replace burner control
	* Smoking flame	* Reset combustion air flow rate * Check the nozzle and, if necessary, replace it * Check cleanness of combustion head * Check chimney suction * Check boiler cleanness
	* Combustion head dirty	* Clean combustion head
BURNER LOCKS OUT WITHOUT ANY FUEL FLOW RATE	* No fuel	* Fill the tank
	* Pump joint broken	* Check pump pressure
	* Pump damaged	* Check pump suction
		* Replace pump
	* Compressed air (or steam) too high	* Released compressed air (or steam) pressure
	* Oil metering valve not open far enough	* Check air pressure
		* Check servomotor position
	* Oil valve not energized	* Check wiring path or replace valve
	* Fan motor not efficient	* Adjust or replace the motor
	* Fan or pump motor runs in the wrong way	* Change rotation
	* Obstructed nozzle	* Clean or replace the nozzle
	* Check valve in the tank locked or leaking	* Clean or replace the valve
	* Oil filter dirty * Pump filter dirty	* Clean filter
	* Solenoid valve dirty or broken	* Clean or replace solenoid valve
BURNER LOCKS OUT WITH FUEL FLOW RATE (NO FLAME)	* Oil pressure too low	* Reset oil pressure
	* Nozzle dirty or damaged	* Clean or replace nozzle
	* Water in the tank	* Take off all the water from the tank
		* Clean all filters
	* Suction too high	* Check suction before pump. If necessary clean filters.
	* Ignition electrodes grounded because dirty or damaged	* Clean or replace electrodes
	* Ignition electrodes badly set	* Check electrodes position referring to instruction manual
	* Cables damaged	* Replace cables
	* Bad position of cables in the ignition transformer or into the electrodes	* Improve the installation
	* Ignition transformer damaged	* Replace the transformer
PUMP TOO NOISY	* Suction too high (over 0,35 bar) (dirty filters, check valve in the tank locked, and so on ...)	* Clean filters * Replace check valve in the tank
	* Flexible hoses damaged	* Replace flexible hoses
	* Air infiltration in the pipes	* Take off all infiltration
	* Pipe too long or too narrow	* Increase line size
BURNER RUMBLES WHEN MODULA-TING TO HIGH FIRE	* Burner is too lean	* Adjust air-oil ratio
	* Drawer assembly not set properly	* Check drawer position
	* Oil may be too hot	* Check oil temperature
	* Flame is blowing off head	* Check head position
CARBON BUILD-UP ON THE FIRESIDES OF THE BOILER	* Oil flame not retaining to head	
	* Dirty nozzle	* Clean the nozzle
	* Oil spray impinging on burner head	* Check position of the nozzle respect to the head
	* Spray angle of the nozzle too wide	* Reduce spray angle
FLAME IRREGULAR OR SPARKING	* Oil pressure at nozzle too low	* Reset oil pressure
	* Air flow rate too high	* Adjust air flow rate
	* Oil is too cold	* Adjust oil temperature
	* Dirt in the oil	* Check filters
	* Water in the fuel	* Take off all the water
	* Oil impingement on the combustion head	* Drawer assembly far too rear * Nozzle is not protruding through centerhole of air diffuser * Oil flame not retaining to the head
	* Nozzle dirty or damaged	* Clean or, if necessary, replace the nozzle
BURNER LIGHTS BUT FLAME DOESN'T RETAIN TO BURNER HEAD	* Drawer assembly not positioned correctly	* Move forward or backward
	* Nozzle too far forward through centerhole of diffuser	* Move nozzle backward respect to diffuser
	* Oil or air pressure at nozzle is too low	* Increase oil or air pressure
	* Air louver too open	* Reduce air louver opening
	* Too much spread between oil and air (or steam) pressure	* Set the spread to a proper value
FLAME IRREGULAR OR SMOKING	* Not enough combustion air	* Adjust air flow rate
	* Nozzle dirty or damaged	* Clean or, if necessary, replace the nozzle
	* Flame is too big for furnace or nozzle spray angle is wrong	* Check burner-furnace coupling * Change nozzle with a suitable one
	* Nozzle spray angle wrong (flame too long or too wide)	* Replace nozzle
	* Boiler dirty	* Clean the boiler
	* Not enough suction at chimney	* Check chimney cleanness or size
	* Pressure at nozzle too low	* Reset oil pressure
	* Oil too cold	* Reset oil temperature
	* Combustion air inlet dirty	* Clean the air inlet
	* Flame is too small respect to furnace volume	* Replace nozzle or reset pump pressure
FUEL GAS TEMPERATURE TOO HIGH	* Boiler dirty	* Clean the boiler
	* Oil flow rate too high	* Adjust oil pressure or replace nozzle

C.I.B. UNIGAS S.p.A.
Via L.Galvani, 9 - 35011 Campodarsego (PD) - ITALY
Tel. +39 049 9200944 - Fax +39 049 9200945/9201269
web site: www.cibunigas.it - e-mail: cibunigas@cibunigas.it

LME73.000Ax + PME73.831AxBC
LME73.831AxBC

Service instruction manual

M12921CB Rel.1.2 02/2016

GENERAL FEATURES

LME/ is suitable for gas, light and heavy oil burners
LME7 series has two devices: LME73.000 (hardware) and PME73.831AxBC (programmable unit). The LME73.831AxBC is also available: it has a built in software and it isa not programmable.
LME7 is inside the control panel. If supplied, PME73.831BC is inside the LME7;
The display AZL23.. or AZL21.. is available for Service and hardware setup.

LME7… are used for the startup and supervision of 2-stage/progressive, modulating forced draft gas burners in intermittent operation.
The flame is supervised with an ionization probe, optionally with UV flame detector QRA2..., QRA4.U or QRA10....
Integrated in the LME7... basic unit are:
• Burner control
• BCI
• Control for one actuator
• Lockout reset button (info button)
• 3 multicolor signal lamp LED for operations and fault notifications
• 3 x 7-segment display for service, fault and operating state information
• Interface for program module (no function)
Passwords protect the different parameter levels against unauthorized access. Basic settings that the plant operator can make on site require no password.
Functions:
- Undervoltage detection
- Electrical remote reset facility
- Accurate control times thanks to digital signal handling
- Multicolor indication of fault status and operating state messages
- Air pressure supervision with function check of air pressure switch during start and operation (gas)
- Repetition limitation
- Controlled intermittent operation after 24 hours of continuous operation*
- BCI
- Indication of program sequence

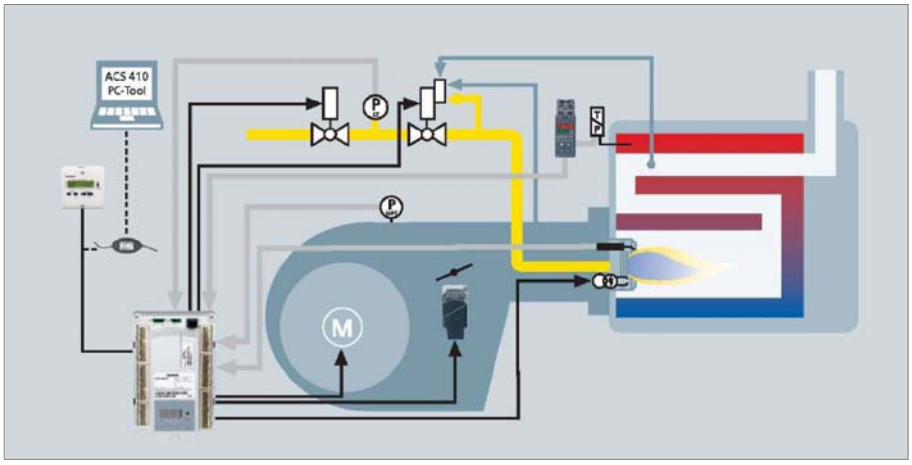

* after no more than 24 hours of continuous operation, the burner control initiates automatic controlled shutdown followed by a restart.

User interface :

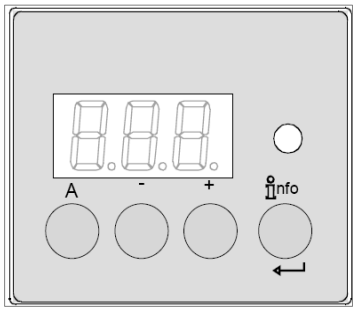

A	***Button A*** - Display preset output - In lockout position: Power value to the time of fault
Info	I***nfo and Enter button*** - Reset in the event of fault, changeover visual diagnostic of the cause of fault (refer to chapter Diagnostics of cause of fault)
-	***- button*** - Display flame signal current 2 or phases display - In lockout position: MMI phase to the time of fault
+	***+ button*** - Display flame signal current 1 or phases display - In lockout position: MMI phase to the time of fault
	3 multicolor signal lamp - Refer to chapter “Blink code table”
- + +	**+ and - button: Escape function** (press + and - simultaneously) - No adoption of value - One menu level up - Keep depressed for >1second for backup / restore function

First startup when PME is supplied or PME replacement:

First startup:
1) insert a new PME
2) turn the power on; The diplay shows "rst" and "PrC" one after the other.
3) keep pushing the INFO button more than 3 seconds; "run" appears; PME parameters will be transferred to LME
4) at the end, "End" and "rst" appears one after the other; Later (2'), the control box locks out "Loc 138"
5) reset the control box by pressing the INFO button (for less than 3 seconds)
Now the display shows "OFF"; the burner is ready to be started.

Replacement:
1) Turn off the burner, replace the existing PME with a new one
2) For the first startup, repeat the above procedure, from step 2.

List of phase display on board LME :

Phase number of 7-segment display	**LED**	**Function**
Standby		
OFF	Off	Standby, waiting for heat demand
P08	Off	Mains ON / test phase (e.g. detector test)
Startup		
P21	Yellow	Safety valve ON, air pressure switch test / POC test (timeout / locking
P22	Yellow	Fan motor ON / air pressure switch test / settling time
P24	Yellow	Actuator opens in prepurging position
P30	Yellow	Prepurging
P36	Yellow	Actuator closes in ignition load / low-fire position
P38	Yellow blinking	Preignition time
P40	Yellow blinking	1st safety time (TSA1) / ignition transformer ON
P42	Green	Safety time (ignition transformer OFF), flame check
P44	Green	Interval: End of safety time and fuel valve 1 (V1) ON Interval: End of safety time and load controller (LR) release
P50 Green	P50 Green	2nd safety time (TSA2)
P54 Green	P54 Green	P259.01: Actuator opens in > low-fire
P54 Green	P54 Green	P260: Actuator closes in low-fire
oP1 Green	oP1 Green	Interval until release of load controller target (analog or 3-position step input)
Operation		
oP	Green	Operation, modulating operation
Shutdown		
P10	Yellow	Shutdown, actuator opens in CLOSE position (home run)
P72	Yellow	Actuator opens in high-fire position / end of operation
P74	Yellow	Postpurging
Valve proving		
P80	Yellow	Test space evacuating
P81	Yellow	Checking time fuel valve 1
P82	Yellow	Test space filling
P83	Yellow	Checking time fuel valve 2
Waiting phases (start prevention)		
P01	Red / yellow blinking	Undervoltage
P02	Yellow	Safety loop open
P04	Red / green blinking	Extraneous light on burner startup (timeout / locking after 30 s)
P90	Yellow	Pressure switch-min open
Lockout		
LOC	Red	Lockout phase

Operation :

	The lockout reset button (info button) (EK) is the key operating element for resetting the burner control and for activating / deactivating the diagnostics functions.
	The multicolor signal lamp (LED) is the key indicating element for visual diagnostics.

Both lockout reset button (EK) and signal lamp (LED) are located in the control panel.
There are 2 diagnostics choices:
1. Visual diagnostics: Indication of operating state or diagnostics of cause of fault
2. Diagnostics: Via internal display or to AZL2.. display and operating unit
Visual diagnostics:
In normal operation, the different operating states are indicated in the form of color codes according to the color code table given below.

Color code table for multicolor signal lamp (LED) **:**

State	Color code	Color
Waiting time (tw), other waiting states	❍.....	OFF
Ignition phase, ignition controlled	● ❍ ● ❍ ● ❍ ● ❍ ● ❍ ●	Blinking yellow
Operation, flame o.k.	□.....	Green
Operation, flame not o.k.	□ ❍ □ ❍ □ ❍ □ ❍ □ ❍	Blinking green
Extraneous light on burner startup	□ ▲ □ ▲ □ ▲ □ ▲ □ ▲	Green-red
Undervoltage	● ▲ ● ▲ ● ▲ ● ▲ ● ▲	Yellow-red
Fault, alarm	▲.....	Red
Error code output (refer to «Error code table»)	▲❍ ▲❍ ▲❍ ▲❍	Blinking red
Interface diagnostics	▲ ▲ ▲ ▲ ▲ ▲ ▲ ▲	Red flicker light
Heating request	●.....	Yellow
Heating request	● ● ▲ ● ● ▲ ● ● ▲ ● ●	Yellow

Key

.....	Steady on
❍	Led off
▲	Led red
●	Led yellow
□	Led green

Program sequence :

Version 1:

- Ignition load < low-fire
- Prepurging in high-fire
- Parameter 515 = 1 (condition parameter 259.01 > 0 seconds)

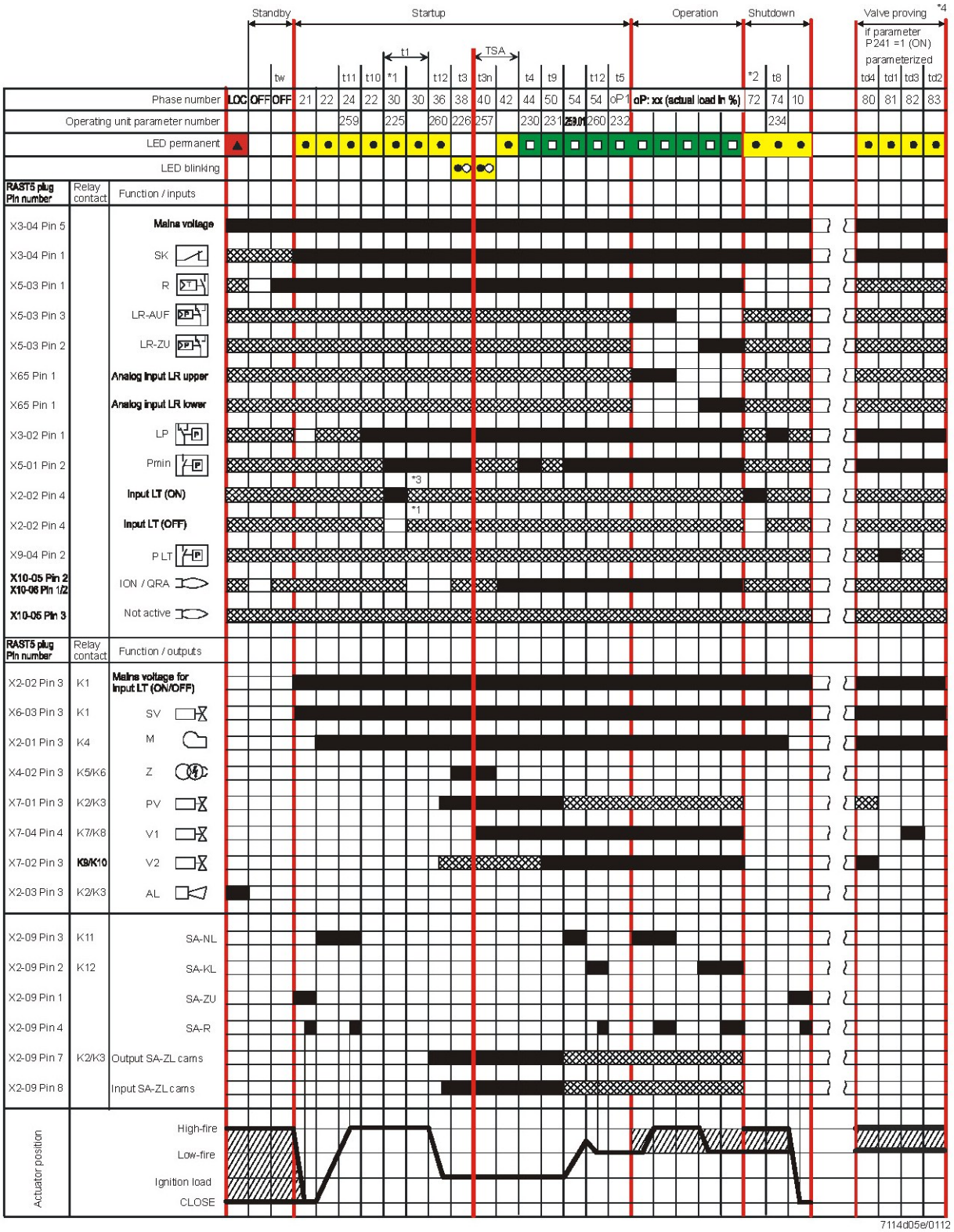

Program sequence :

Version 2:

- Ignition load > low-fire
- Prepurging in high-fire
- Parameter 515 = 1 (condition parameter 259.01 = 0 seconds)

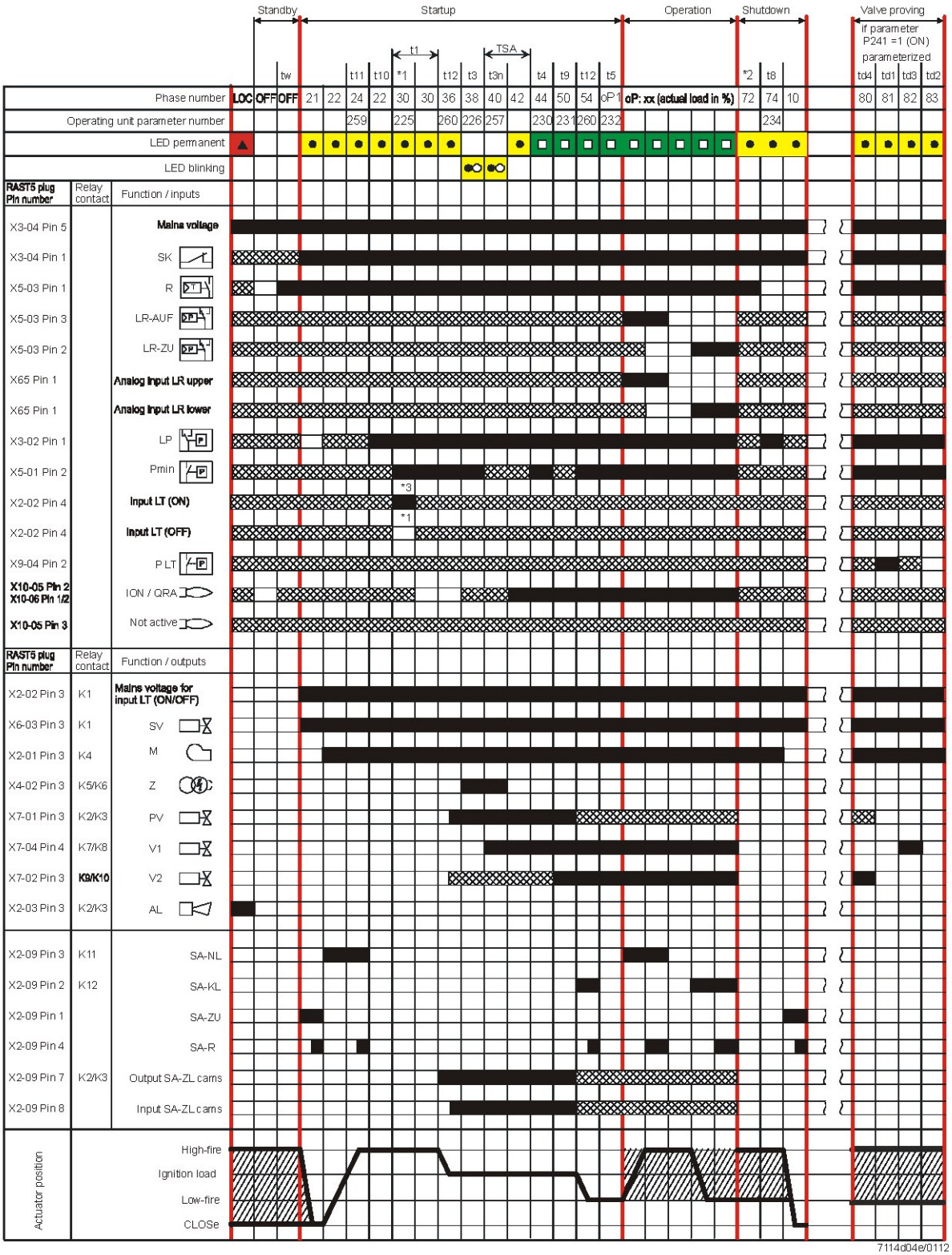

Phase number	Function
LOC	Lockout phase
OFF	Standby, waiting for heat demand
oP	Operation, modulating operation
oP1	Interval until release of load controller target (analog or 3-position step input)
01	Under voltage
02	Safety loop open
04	Extraneous light on burner startup (timeout/locking after 30 seconds)
08	Mains ON/test phase (e.g. detector test)
10	Shutdown, actuator opens in CLOSE position (homerun)
21	Safety valve ON, air pressure switch OFF, actuator opens in CLOSE position
22	Part 1: Fan motor ON
	Part 2: Specified time (t10) air pressure switch (LP)
	Message (timeout) stabilization air pressure switch
24	Actuator opens in prepurge position
30	Part 1: Prepurge time (t1) without extraneous light test
	Valve proving after mains ON, lockout
	Part 2: Prepurge time (t1) with extraneous light test
36	Actuator closes in ignition load
38	Preignition (t3)
40	Postignition time (t3n), parameter 257 + 0.3 seconds
42	Flame detection
44	Interval (t4): End of safety time (TSA) and burner valve 2 ON
50	2nd safety time (t9)
54	Parameter 259.01: Actuator opens in > low-fire
	Parameter 260: Actuator closes in low-fire
72	End of operation, checking if valve proving (LT) shall be performed
74	Postpurging (t8)
80	Test space evacuation (td4)
81	Test time (td1) fuel valve 1 (V1)
82	Test space filling (td3)
83	Test time (td2) fuel valve 2 (V2)
90	Pressure switch-min open □ safety shutdown
*1	Valve proving is conducted when…
	- parameter 241.00 = 1 and parameter 241.02 = 1, or
	- parameter 241.00 = 1 and parameter 241.01 = 0
*2	Valve proving is conducted when…
	- parameter 241.00 = 1 and parameter 241.02 = 1, or
	- parameter 241.00 = 1 and parameter 241.01 = 1
*3	Valve proving (LT) will not be performed

Error code table :

Red blink code of fault signal lamp (LED)	Possible cause
2 x blinks	No establishment of flame at the end of the safety time (TSA)
	- Faulty or soiled flame detector - Faulty or soiled fuel valves - Poor adjustment of burner, no fuel - Faulty ignition equipment
3 x blinks	Air pressure switch (LP) faulty - Loss of air pressure after specified time (t10) - - Air pressure switch (LP) welded in no-load position
4 x blinks	Extraneous light on burner startup
5 x blinks	Time supervision air pressure switch (LP) - Air pressure switch (LP) welded in working position
6 x blinks	Actuator position not reached - Actuator faulty - Wrong adjustment of cam - Actuator defective or blocked - False connection - Misadjustment
7 x blinks	Too many losses of flame during operation (limitation of repetitions) - Faulty or soiled flame detector - Faulty or soiled fuel valves - Poor adjustment of burner
8 x blinks	Free
9 x blinks	Free
10 x blinks	Wiring error or internal error, output contacts, other faults
12 x blinks	Valve proving (LT) - Fuel valve 1 (V1) leaking
13 x blinks	Valve proving (LT) - Fuel valve 2 (V2) leaking
14 x blinks	Error in connection with valve closure control POC
15 x blinks	Error code ≥15 Error code 22: Error of safety loop (SL)

During the time the cause of fault is diagnosed, the control outputs are deactivated:
- Burner remains shut down
- External fault indication (AL) at terminal X2-03, pin 3 steady on

Diagnostics of cause of fault is quit and the burner switched on again by resetting the burner control. Press the lockout reset button (info button) for about 1 second (<3 seconds).

Flame detection – detection electrode :

Short-circuit current	Max. AC 1 mA
Required detector current	Min. DC 2 µA, display approx. 45 %
Possible detector current	Max. DC 3 µA, display approx. 100 %
Permissible length of detector cable (laid separately)	30 m (core-earth 100 pF/m)

Measuring circuit

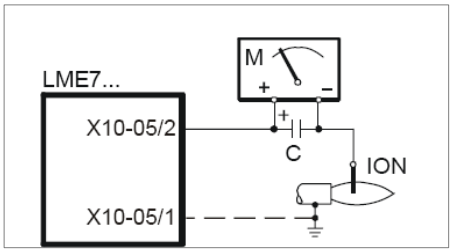

Keys

C - Electrolytic condenser 100...470 µF; DC 10...25 V
ION - Ionization probe
M - Microammeter Ri max. 5,000 Ω

Flame detection – UV probe :

Threshold values when flame is supervised by QRA...

- Start prevention (extraneous light)	Intensity (parameter 954) approx. 12 %
- Operation	Intensity (Parameter 954) approx. 13 %
Operating voltage	AC 280 V ±15 %
Mains frequency	50...60 Hz ±6 %
Required detector current	Min. 70 µA
Possible detector current	
- Operation	Max. 700 µA
Perm. length of detector cable	
- Normal cable, laid separately [1])	Max. 100 m

[1]) Multicore cable not permitted

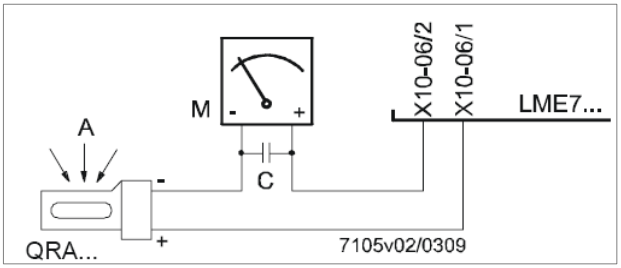

Keys

A - Exposure to light
C - Electrolytic condenser 100...470 µF; DC 10...25 V
M - Microammeter Ri max. 5,000 Ω

Warning!
Input QRA... is not short-circuit-proof!
Short-circuits of X10-06/2 against earth can destroy the QRA... input
Simultaneous operation of flame detector QRA... and detection electrode is not permitted
To make certain the age of the UV tube can be determined, the LME7... basic unit must always be connected to mains supply.

Gas proving system :

Valve proving is dependent on input valve proving ON / OFF (X2-02). When a leak is detected, the gas valve proving function ensures that the gas valves will not be opened and that ignition will not be switched on. Lockout will be initiated.
.

Valve proving with separate pressure switch (P LT)
Step 1: td4 – Evacuation of test space
Gas valve on the burner side is opened to bring the test space to atmospheric pressure.
Step 2: td1 – Test atmospheric pressure
When the gas has closed, the gas pressure in the test space must not exceed a certain level.
Step 3: td3 Filling of test space
Gas valve on the mains side opens to fill the test space.
Step 4: td2 – Test gas pressure
When the gas valve has closed, the gas pressure in the test space must not drop below a certain level.

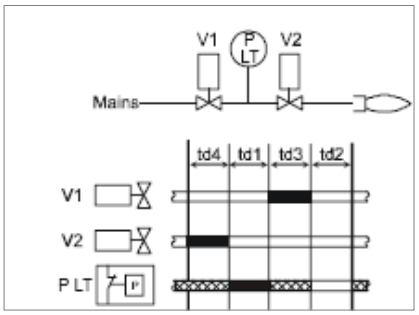

Controllo tenuta con pressostati separati

Keys
td1 Test atmospheric pressure
td2 Test gas pressure
td3 Filling of test space
td4 Evacuation of test space
V… Fuel valve
PLT Pressure switch valve proving
Input / output signal 1 (ON)
Input / output signal 0 (OFF)
Input permissible signal 1 (ON) or 0 (OFF)

No.	***Parameter***
242	Valve proving evacuation of test space
243	Valve proving time test atmospheric pressure
244	Valve proving filling of test space
245	Valve proving time test gas pressure

Instruction, control and modify via AZL2x :

The AZL2x.. display/programming unit is shown below:

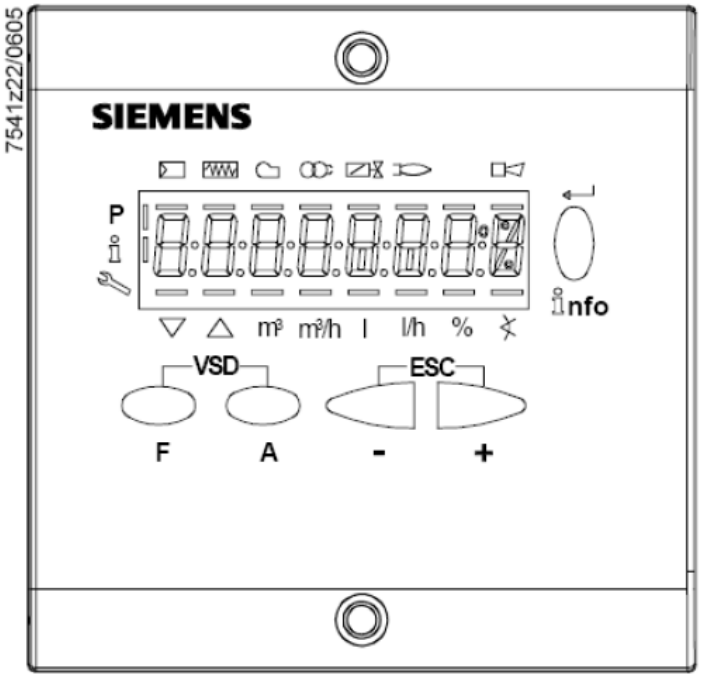

The keys functions are the following:

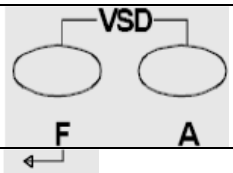	Key F + A While pressing the two keys contemporarly, the code message will appear: by entering the proper password it is possible to access the Service mode.
	Info and Enter keys Used for Info and Service menues Used as Enter key in the setting modes Used as Reset key in the burner operation mode Used to enter a lower level menu
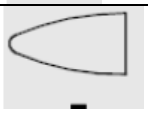	Key - Used for one menu level down Used to decrease a value
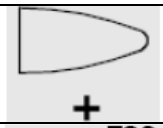	Key + Used for one menu level up Used to increase a a value
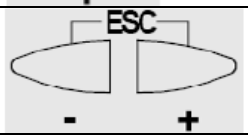	Keys (+ & -)= ESC By pressing + and - at the same time, the ESCAPE function is performed No adoption of value One menu level down

The display will show these data:

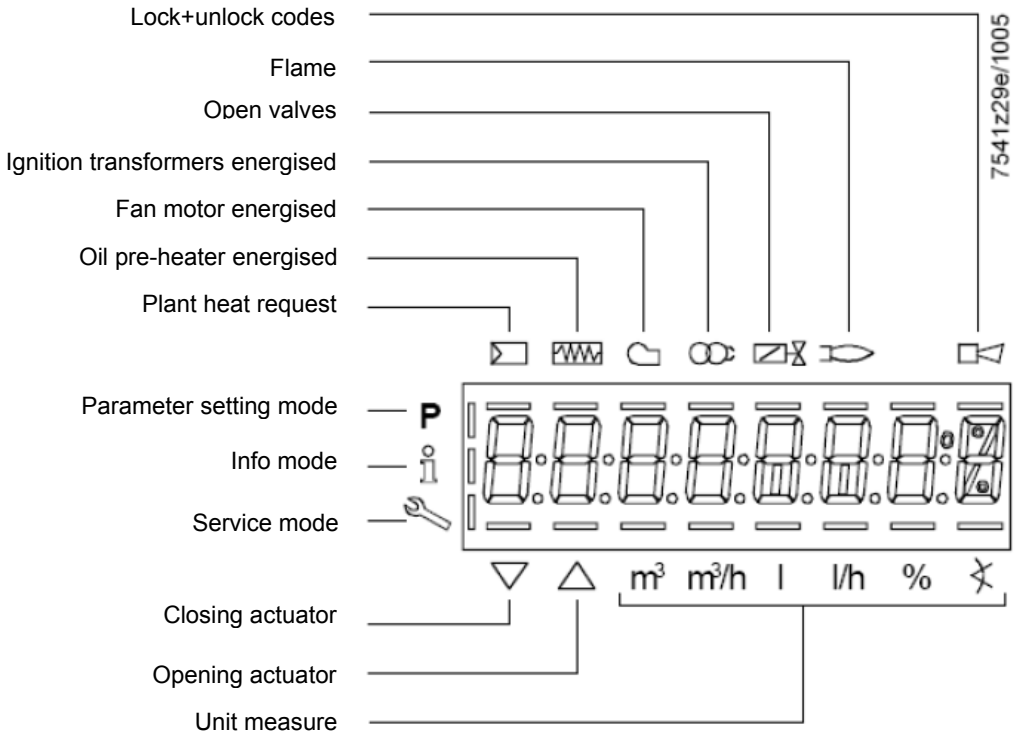

While pushing the  button together with whatever else button, LME73 locks out; the display shows

On stand-by position, 

appears

On operation, all the phases appears with their number. 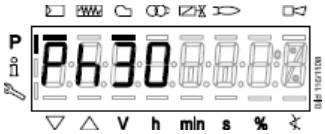

List of phase with display AZL2x :

Phase number	Function
Standby	
OFF	Standby, waiting for heat request
Ph08	Power ON / test phase (e.g. detector test)
Startup	
Ph21	Safety valve ON, air pressure switch test / POC test (timeout / locking after 5 seconds), actuator opens in low-fire position / CLOSE position
Ph22	Fan motor ON or air pressure switch test / settling time
Ph24	Actuator travels to the prepurge position
Ph30	Prepurging
Ph36	Actuator closes until ignition load / low-fire is reached, and parameter 259.02: Actuator opens to a position > ignition load
Ph38	Preignition
Ph40	1st safety time (TSA1) / ignition transformer ON
Ph42	Safety time (ignition transformer OFF), flame check
Ph44	Interval: End of safety time and fuel valve 1 (V1) ON
Ph50	2nd safety time (TSA2)
Ph54	P259.01: Actuator opens in > low-fire
Ph54	P260: Actuator closes in low-fire
oP1	Interval until release of load controller target (analog or 3-position step input)
Operation	
oP	Operation, modulating operation
Shutdown	
Ph10	Shutdown, actuator opens in CLOSE position (home run)
Ph72	Actuator opens in high-fire position / end of operation
Ph74	Postpurging
Valve proving	
Ph80	Test space evacuating
Ph81	Checking time fuel valve 1
Ph82	Test space filling
Ph83	Checking time fuel valve 2
Waiting phases (start prevention)	
Ph01	Undervoltage
Ph02	Safety loop open
Ph04	Extraneous light at burner startup (timeout / locking after 30 seconds)
Ph90	Pressure switch-min open → safety shutdown
Lockout	
LOC	Lockout phase

Error code list with operation via internal AZL :

Error code	***Clear text***	***Possible cause***
Loc 2	No establishment of flame at the end of the safety time (TSA)	- Faulty or soiled fuel valves - Faulty or soiled flame detector - Poor adjustment of burner, no fuel - Faulty ignition equipment
Loc 3	Air pressure faulty (air pressure switch (LP) welded in no-load position, decrease to spe-cified time (t10) (air pressure switch (LP) re-sponse time)	Air pressure switch (LP) faulty - Loss of air pressure signal after specified time (t10) - Air pressure switch (LP) is welded in no-load position
Loc 4	Extraneous light	Extraneous light when burner startup
Loc 5	Air pressure faulty, air pressure switch wel-ded in working position	Time out air pressure switch (LP) - Air pressure switch (LP) is welded in working position
Loc 6	Fault of actuator	- Actuator faulty or blocked - Faulty connection - Wrong adjustment
Loc 7	Loss of flame	Too many losses of flame during operation (limitation of repetitions) - Faulty or soiled fuel valves - Faulty or soiled flame detector - Poor adjustment of burner
Loc 8	---	Free
Loc 9	---	Free
Loc 10	Error not relatable (application), internal error	Wiring error or internal error, output contacts, other faults
Loc 12	Valve proving	Fuel valve 1 (V1) leak
Loc 13	Valve proving	Fuel valve 2 (V2) leak
Loc 22	Safety loop open	- Gas pressure switch-max open - Safety limit thermostat cut out
Loc 138	Restore process successful	Restore process successful
Loc 167	Manual locking	Manual locking
Loc: 206	AZL2... incompatible	Use the latest version

Entering the Parameter levels:

y means of a proper use of the keys, it is possible to enter the various level parameters, as shown in the following flow chart :

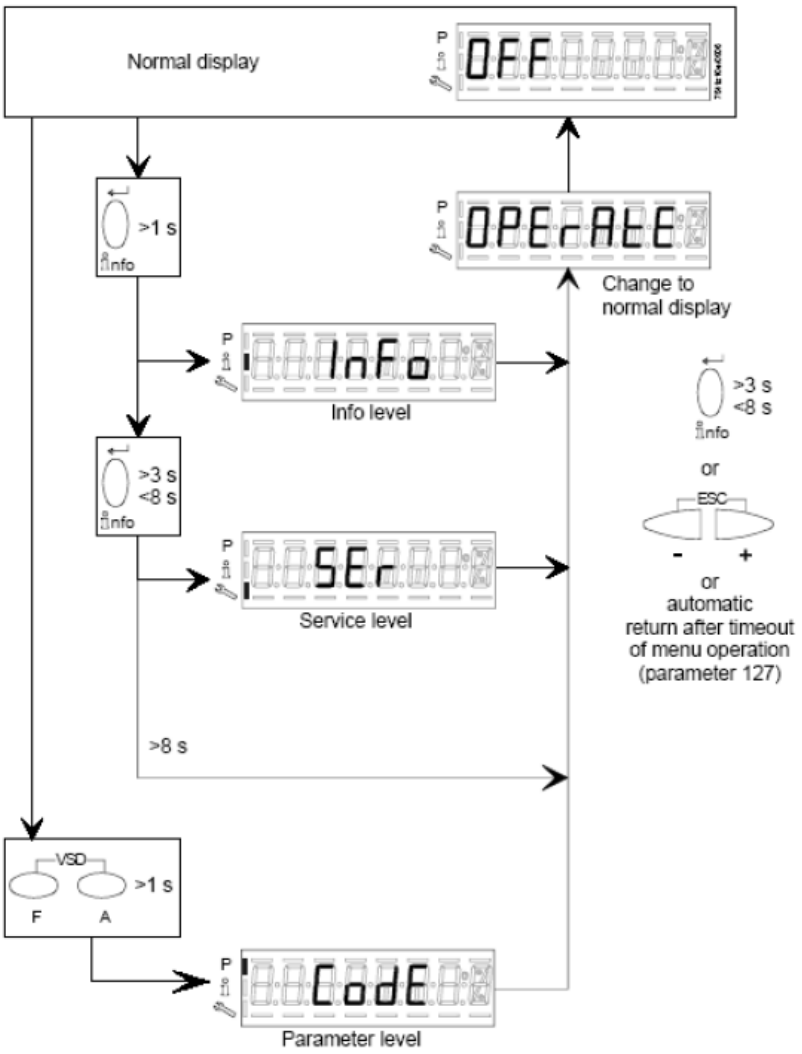

Info level :

Keep pushing the 

button until 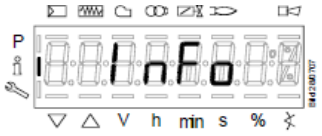

appears. Use + or - for scrolling the parameter list. If on the right side a dash-dot appears, it means the display doesn't show the full description. *Push* 

again for 1 to 3 s in order to show the full description.

Below the visible **Info** parameters:

Parameter number	Parameter list PME73.000Ax + PME73.831AxBC LME73.831AxBC	Edit	Value range Min.	Value range Max.	Resolution	Factory setting	Password level reading from level	Password level writing from level
100	**General**							
102	Identification date	Read only	---	---	---		Info	---
103	Identification number	Read only	0	9999	1		Info	---
113	Burner identification	Read only	x	xxxxxxxx	1		Info	---
164	Numbers of startups resettable	Resettable	0	999999	1		Info	Info
166	Total number of startups	Read only	0	999999	1		Info	---
170.00	Switching cycles actuator relay K12	Read only	0	999999	1		Info	---
170.01	Switching cycles actuator relay K11	Read only	0	999999	1		Info	---
170.02	Switching cycles actuator relay K2	Read only	0	999999	1		Info	---
170.03	Switching cycles actuator relay K1	Read only	0	999999	1		Info	---
171	Max. switching cycles actuator relay	Read only	0	999999	1		Info	---

Service level :

Keep pushing the 

button until 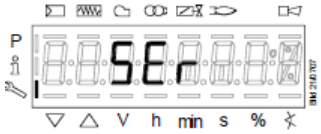

appears. Use + or - for scrolling the parameter list. . If on the right side a dash-dot appears, it means the display doesn't show the full description. *Push* 

again for 1 to 3 s in order to show the full description.

Below the visible **Info** parameters:

Parameter number	Parameter list PME73.000Ax + PME73.831AxBC LME73.831AxBC	Edit	Value range Min.	Value range Max.	Resolution	Factory setting	Password level reading from level	Password level writing from level
700	**Error history**							
701	Current error:	Read only					Service	---
	00: Error code		2	255	1			
	01: Startup meter reading		0	999999	1			
	02: MMI phase		---	---	---			
	03: Power value		0%	100%	1			
702	Error history former 1:	Read only					Service	---
	00: Error code		2	255	1			
	01: Startup meter reading		0	999999	1			
	02: MMI phase		---	---	---			
	03: Power value		0%	100%	1			
•								
•								
•								
711	Error history former 10:	Read only					Service	---
	00: Error code		2	255	1			
	01: Startup meter reading		0	999999	1			
	02: MMI phase		---	---	---			
	03: Power value		0%	100%	1			

900	**Process data**							
936	Normalized speed	Read only	0%	100%	0.01 %		Service	---
951	Mains voltage	Read only	0 V	LME73.000A1: 175 V LME73.000A2: 350 V	1 V		Service	---
954	Flame intensity	Read only	0%	100%	1%		Service	---

Parameter level (Heating engeneering) :

This level lets the engineer to modify some burner parameters. It is protect with a 4 digit password (SO level) and a 5 digit password (OEM level)
Password input : push **F** and **A** buttons together until the display shows "**code"** and 7 underlines. The left one flashes. By **+** or **-** move the flashing underline until it is on the desired position and push "enter". The underline becomes a dash. By means of **+** or **-,** choose the right character and push "enter". Input the whole password and the **PArA** appears and later on **000 Int** .
Scroll the parameters using **+** or **-: 000Int**, **100**, **200**, **500**, **600 are on the display**. Choose the proper parameter group with the **enter** button and scroll the options with **+** e poi **-** (below the full par set: the two columns on the right give the level access). Choose the parameter to be modified with "enter" is writing is allowed. The parameter now flashes: **+** or **–** modifies the parameter and **enter** confirms. **+** and **-** pushed togther movbe the menu one step back. Push **+** and **-** several times in order to get the home position..

Parameter number	Parameter list PME73.000Ax + PME73.831AxBC LME73.831AxBC	Edit	Value range		Resolution	Factory setting	Password level reading from level	Password level writing from level
			Min.	Max.				
0	**Internal parameter**							
41	Heating engineers password (4 characters)	Edit	xxxx	xxxx	---		---	OEM
42	OEM's password (5 characters)	Edit	xxxxx	xxxxx	---		---	OEM
60	Backup / restore	Edit	Restore	Backup	---		---	SO
100	**General**							
123	Min. power control step	Edit	1%	10%	0.1		SO	SO
140	Mode display of Display and operating unit AZL2... 1 = Standard (program phase) 2 = Flame 1 (QRA... / ION) 3 = Flame 2 (QRB... / QRC...) 4 = Active power (power value)	Edit	1	4	4		SO	SO
200	**Burner control**							
224	Specified time (t10) air pressure switch (LP)	Edit	0 s	13.818 s	0.294 s	12,054	SO	OEM
225	Gas: Prepurge time (t1)	Edit	0 s	1237 s	4.851 s	29,106	SO	OEM
226	Gas: Preignition time (t3)	Edit	1.029 s	37.485 s	0.147 s	2,058	SO	OEM
230	Interval (t4): End of safety time (TSA) - fuel valve 1 (V1) ON	Edit	3.234 s	74.97 s	0.294 s	3,234	SO	OEM
231	Interval (t9): Fuel valve 1 (V1) ON - pilot valve (PV) OFF	Edit	0 s	74.97 s	0.294 s	2,940	SO	OEM
232	Interval (t5): Pilot valve (PV) OFF - load controller (LR) release	Edit	2.058 s	74.97 s	0.294 s	8.820	SO	OEM
234	Gas: Postpurge time (t8)	Edit	0 s	1237 s	4.851 s	0	SO	OEM
239	Gas: Intermittent operation after 24 hours of continuous operation 0=OFF 1=ON	Edit	0	1	1	1	SO	OEM

240	Repetition in the event of loss of flame during operation 0 = None 1 = None 2 = 1 x Repetition	Edit	0	2	1	0	SO	OEM
241.00	Valve proving 0 = Off 1 = On	Edit	0	1	1	1	SO	OEM
241.01	Valve proving 0 = During prepurge time (t1) 1 = During postpurge time (t8)	Edit	0	1	1	0	SO	OEM
241.02	Valve proving 0 = According to P241.01 1 = During prepurge time (t1) and postpurge time (t8)	Edit	0	1	1	0	SO	OEM
242	Valve proving test space evacuating	Edit	0 s	2.648 s	0.147 s	2,646	SO	OEM
243	Valve proving time test atmospheric pressure	Edit	1.029 s	37.485 s	0.147 s	10,290	SO	OEM
244	Valve proving test space filling	Edit	0 s	2.648 s	0.147 s	2,646	SO	OEM
245	Valve proving time test gas pressure	Edit	1.029 s	37.485 s	0.147 s	10,290	SO	OEM
254	Response time detector error 0 = 1 s 1 = 3 s	Edit	0	1	1	0	SO	OEM
257	Gas: Postignition time (t3n – 0.3 seconds)	Edit	0 s	13.23 s	0.147 s	2,205	SO	OEM
259.00	Opening time of actuator (t11) (timeout for lockout)	Edit	0 s	1237 s	4.851 s	67,914	SO	OEM
259.01	Opening time of actuator from ignition load to low-fire position	Edit	0 s	37.485 s	0.147 s	14,994	SO	OEM
259.02	Opening time of actuator from low-fire to ignition load position	Edit	0 s	37.485 s	0.147 s	14,994		
260	Closing time of actuator (t12) (timeout for lockout)	Edit	0 s	1237 s	4.851 s	67,914	SO	OEM
500	**Ratio control**							
515	Actuator position during prepurge time (t1) and postpurge time (t8) 0: Purging in low-fire 1: Purging in high-fire	Edit	0	1	1	1	SO	OEM
560	Pneumatic combustion control 0 = off / 3-step modulation 1 = PWM fan / analog modulation ~~2 = air damper / analog modulation (feedback potentiometer ASZxx.3x required)~~	Edit	0	2	1	1	SO	SO

600	Power setting							
654	Analog input (feedback potentiometer ASZxx.3x required) 0 = 3-position step input 1 = 0...10 V 2 = 0...135 Ω 3 = 0...20 mA 4 = 4...20 mA with lockout at I <4 mA 5 = 4...20 mA	Edit	0	5	1	0	SO	SO

WARNING	
Parameter Num. : **41** **42** **60** **123** **140** **242** **243** **244** **245** **259.01**	**Adjustable parameters from SO or OEM levels for LME73.831AxBC**

Note: Specifications and data subject to change. Errors and omissions excepted.